**VILLAGE COUNCIL AGENDA**
**REGULAR MEETING**
**226 Cypress Lane, Palm Springs, Florida 33461**
**Thursday, May 13, 2021**
**6:30 PM**

---

*Persons who need an accommodation in order to attend or participate in this meeting should contact the Village Clerk at (561) 965-4010 at least three (3) business days prior to the meeting in order to request such assistance.*

---

1. **CALL TO ORDER**

2. **ROLL CALL** *Mayor Bev Smith, Vice Mayor Gary Ready, Mayor Pro Tem Doug Gunther, Council Member Joni Brinkman, Council Member Patti Waller, Village Attorney Glen Torcivia, Village Manager Richard Reade, and Village Clerk Kimberly Wynn*

3. **INVOCATION**

4. **PLEDGE OF ALLEGIANCE**

5. **ADDITIONS, DELETIONS, OR MODIFICATIONS, AND APPROVAL OF AGENDA**

6. **CONSENT AGENDA** *(Public Comment on Consent Agenda Items is permissible prior to voting)*

   6.1 Approval of Minutes - April 8, 2021 Village Council Regular Meeting Minutes
   1. April 8, 2021 Village Council Regular Meeting Minutes

   6.2 Approval of Minutes - April 8, 2021 Local Planning Agency Meeting
   2. April 8, 2021 - Local Planning Agency Meeting

   6.3 Approval of Joseph L. Fallon Scholarship Awards - Five (5) Scholarship Awards
   1. All attachments related to this item are available within the Village Clerk's Office.docx

   6.4 Approve 4th of July Fireworks Display Vendor - Parks and Recreation Department (FY 2021 Funded - General Fund) - Exposhows, Inc.
   1. Proposed Agreement - Exposhows, Inc.

2. Cost Proposal and Specifications - Village of Palm Springs

3. Exposhows - Certificate of Liability Insurance
4. Zambelli Fireworks - Fireworks Proposal

6.5 Resolution No. 2021-13 - Approve Budget Transfer - FY 2021 General Fund - Contingency
1. Proposed Resolution No. 2021-13 - Budget Transfer
2. Proposed Budget Transfer Form - FY 2021 General Fund - Contingency

6.6 Approve Lakewood Gardens Park Improvements (Task Order No. 286 - Work Authorization No. WG-G0) - Professional Engineering Services - Parks and Recreation Department (FY 2021 Budget - General Fund) - Wantman Group, Inc.
1. Proposed Work Authorization - Lakewood Gardens Park Improvements (Task Order #286) - Wantman Group
2. Approved Agreement - Wantman Group
3. CIP Form - Lakewood Gardens Park

6.7 Approve Lakewood Gardens Park Picnic Shelter Purchase Contract (Task Order No. 286) - Piggyback - Parks and Recreation Department (FY 2021 Funded - General Fund) - Advanced Recreational Concepts, Inc.
1. Proposed Piggyback Agreement - Advanced Recreational Concepts, Inc.
2. Approval to Piggyback - Advanced Recreational Concepts, Inc.
3. Proposal - Advanced Recreational Concepts
4. Clay County, Florida - Request for Proposals (RFP 1819-2) - Award Notice
5. Clay County, Florida - Request for Proposals (RFP 1819-2) Bid Submittal Documents - Advanced Recreational Concepts, Inc. - Bid Submittal
6. Clay County, Florida - Request for Proposals (RFP 1819-2) Equipment & Amenities Parks & Playgrounds - March 19, 2019
7. Clay County, Florida - Request for Proposals (RFP 1819-2) - Bid Tabulation
8. Clay County, Florida - Request for Proposals (RFP 1819-2) - Approval
9. Advanced Recreational Concepts, Inc. - Pricing List
10. CIP Form - Lakewood Gardens Park

6.8 Approve Carol & Rex Avenue Stormwater Improvements Reconciliation (Change Order No. 1 & Closeout) (Task Order #250) - Public Service Department (FY 2021 Budget Funded - Stormwater Enterprise Fund) - DBF Construction
1. Proposed Change Order #1 - DBF Construction, Inc.
2. Agreement - DBF Construction, Inc.

6.9 Approve Roadway Asphalt Milling & Resurfacing Contract - Work Authorization No. 3 - Piggyback - Public Service Department - (FY 2021 Budget Funded - General Fund) - Ranger Construction Industries, Inc.
1. Proposed Work Authorization No 3 - Roadway Milling and Resurfacing - Ranger Construction Industries
2. Map - Proposed Roadway Segments to be Milled & Paved - FY 2021

6.10 Approve Change Order No. 2 (Task Order #240 - Work Authorization EE-U01 and Task Orders No. 266 and 278 - Work Authorization EE-U05) - Professional Engineering Services - Vacuum Station No. 1 Safety Improvements & Upgrades - Public Service Department (FY 2021 Budget - Water & Sewer Enterprise Fund) - Eckler Engineering, Inc.

1. Proposed Change Order No. 2 & Work Authorization EE-U01 & EE-05 - Eckler Engineering
2. Approved Change Order No. 1 & Work Authorization EE-U01 & EE-05 - Eckler Engineering
3. Approved Work Authorization EE-U01 & EE-05 - Eckler Engineering

6.11 Approve Change Order No. 1 (Task Order No. 271 - Work Authorization EE-U08) - Professional Engineering Services - Replacement of Sand Loader System Project - Public Service Department (FY 2021 Budget Funded - Water & Sewer Enterprise Fund) - Eckler Engineering, Inc.

1. Proposed Change Order No. 1 & Work Authorization -EE-U08 - Eckler Engineering
2. Approved Work Authorization EE-U08 - Eckler Engineering

6.12 Approve Change Order No. 1 (Task Order #261 - Work Authorization EE-P01) - Professional Engineering Services - Storage Building for Maintenance Equipment - Public Service Department (FY 2021 Budget Funded - General Fund Public Works) - Eckler Engineering

1. Proposed Change Order No. 1 & Work Authorization EE-P01 - Eckler Engineering
2. Approved Work Authorization #EE-P01 - Eckler Engineering

6.13 Approve Change Order No. 4 (Task Order #234) - Prairie Road Bridge Replacement Utility Relocation Project - Public Service Department (FY 2021 Budget Funded - Water & Sewer Enterprise Fund) - Palm Beach County

1. Proposed Change Order No. 4 - Palm Beach County
2. Approved Interlocal Agreement - PBC & Village of Palm Springs - Prairie Road Bridge Replacement Utility Relocation Project

6.14 Approve Change Order No. 1 (Task Order #260 - Work Authorization EE-U03) - Professional Engineering Services - Material Storage Building at 2400 Kirk Rd - Public Service Department (FY 2021 Budget Funded - Water & Sewer Enterprise Fund) - Eckler Engineering

1. Proposed Change Order No. 1 & Work Authorization Ee-U03 - Eckler Engineering
2. Approved Work Authorization EE-U03 - Eckler Engineering

6.15 Approve Surficial Aquifer Well Rehabilitation Agreement - Piggyback - Public Service Department (FY 2021 Budget Funded - Water & Sewer Enterprise Funded) - Centerline Drilling, Inc.

1. Proposed Piggyback Agreement - Centerline Drilling
2. Approval to Piggyback - Centerline Drilling
3. Town of Jupiter - Executed Contract - Centerline Drilling
4. Town of Jupiter - Bid Tabulation
5. Town of Jupiter - Bid Response - Centerline Drilling
6. Town of Jupiter - Invitation to Bid

6.16 Approve MIEX DOC Resin Acquisition Agreement - Best Interest Acquisition - Public Service Department (FY 2021 Budget Funded - Water & Sewer Enterprise Fund) - IXOM Watercare, Inc.
1. Proposed Agreement - Best Interest Acquisiton - IXOM Watercare, Inc.
2. Sole Source Letter - IXOM Watercare, Inc.
3. Certificate of Liability Insurance - IXOM Watercare, Inc.

6.17 Approve SCADA System Improvements Award - Main Water Treatment Plant (Task Order No. 227) - Invitation to Bid (ITB) - Public Service Department (FY 2021 Budget Funded - Water & Sewer Enterprise Fund) - Revere Control Systems, Inc.
1. Proposed Agreement - SCADA System Upgrade - Revere Controls Systems, Inc.
2. Village Engineer's Recommendation of Award - SCADA System Upgrade - ITB #2021B-003
3. Bid Proposal - SCADA System Upgrades - Revere Control Systems, Inc.
4. Bid Tabulation Form - SCADA System Upgrade - ITB #2021B-003
5. Invitation to Bid - SCADA System Upgrade - ITB #2021B-003
6. Bid Plans - SCADA System Upgrade - ITB #2021B-003
7. Bid Specification - SCADA System Upgrade - ITB #2021B-003
8. Addendum No. 1 - Time Extension - SCADA System Upgrade - ITB #2021B-003
9. Addendum No. 2 - Response to Bidder Questions - SCADA System Upgrade - ITB #2021B-003
10. Addendum No. 3 - Response to Additional Bidder Questions - SCADA System Upgrade - ITB #2021B-003
11. SCADA System Upgrade - CIP Form

6.18 Approve Emergency Generator Improvements - Wells 11,15 & LS 9 Award (Task Order Nos. 264, 265 & 267) - Invitation to Bid (ITB) - Public Service Department (FY 2021 Budget Funded - Water & Sewer Enterprise Fund) - Eau Gallie Electric
1. Proposed Agreement - Emergency Generator Improvements - Eau Gallie Electric
2. Invitation to Bid - Emergency Generator Improvements - ITB #2021B-004
3. Bid Proposal - Emergency Generator Improvments - Eau Gallie Electric
4. Bid Tabulation Form - Emergency Generator Improvements - ITB #2021B-004
5. Village Engineer's Recommendation of Award - Emergency Generator Improvements - ITB #2021B-004
6. Bid Plans - Emergency Generator Improvments - ITB #2021B-004
7. Bid Specification - Emergency Generator Improvements - ITB #2021B-004
8. Addendum No. 1 - Time Extension - Emergency Generator Improvements - ITB #2021B-004
9. Addendum No. 2 - Time Change - Emergency Generator Improvements - ITB #2021B-004
10. Addendum No. 3 Response to Bidder Questions - Emergency Generator Improvements - ITB #2021B-004
11. Original CIP Sheet LS9
12. Original CIP Sheet Well 11
13. Original CIP Sheet Well 15
14. Map of Emergency Generator Locations

**END OF CONSENT AGENDA**

## 7. PRESENTATIONS

7.1 Presentation - Joseph L. Fallon Scholarship Awards - Five (5) Scholarship Awards
1. 2021 Fallon Scholarship Recipients

7.2 "Police Week" and "Peace Officers Memorial Day" Proclamation - May 2021
1. Proclamation - Public Service Recognition Week - May 9 through May 15, 2021.pdf

7.3 Hepatitis Month Proclamation - May 2021
1. Proclamation Hepatitis Month.pdf

7.4 Building Safety Month Proclamation - May 2021
1. Proclamation Building Safety Month - May 2021

7.5 Public Service Recognition Week Proclamation - May 2, 2021 - May 8, 2021
2. Proclamation Public Service Recognition - May 2 - 8, 2021

7.6 Approve/Accept the Village of Palm Springs Comprehensive Annual Financial Report (CAFR) - FY 2020
1. FY 2020 Comprehensive Annual Financial Report (CAFR)
2. FY 2020 Financial Highlights Brochure
3. FY 2020 Governance Report

## 8. PUBLIC COMMENT *The public shall be limited to three (3) minutes to speak on agenda or non-agenda item(s)*

## 9. PUBLIC HEARINGS

9.1 Proposed Ordinance No. 2021-03 - Village Code Amendment - Chapter 34 - Law Enforcement and Parks & Recreation Impact Fees [**TO BE CONTINUED TO JUNE 10, 2021**]

9.2 Ordinance No. 2021-04 - Village of Code Amendment - Chapter 34 - Special Events (*Second Reading*)
1. Proposed Ordinance No. 2021-04 - Village Code - Chapter 34 - Special Events

9.3 Ordinance No. 2021-02 - Land Use and Rezoning (Small-Scale) Amendments - Fontana Townhomes - 4063 Davis Road & 4090 Coconut Road (Quasi-Judicial Hearing)(*Second Reading*)
1. Proposed Ordinance No. 2021-02 - Comprehensive Plan (Small Scale) Land Use Map & Rezoning Amendment - 4063 Davis Road & 4090 Coconut Road
2. Exhibit "A" Staff Report & Conditions of Approval (Both Applicants Combined)
3. Applicant's Justification Statements
4. Proposed Site Plan, Landscape Plans, Building Elevations (Information Only)
5. Color Site Plan and Color Rendering (Information Only)

6. Aerial, Location, FLU and Zoning Map

9.4 Resolution 2021-03 - Site Development Plan Amendment - Fontana Townhomes Residential Planned Development Site Plan (SPR21-02) - 4063 Davis Road and 4090 Coconut Road *(Quasi-Judicial Hearing)*
1. Proposed Resolution No. 2021-03 - Site Development Plan Amendment - 4063 Davis Road & 4090 Coconut Road - SPR21-02
2. Exhibit "A" Staff Recommendation and Conditions of Approval
3. Project Narrative and Justification Statement
4. Site Plan, Landscape Plans, Architectural Plans, Civil Plans and Letters
5. Color Site Plan and Color Rendering
6. Legal Descriptions
7. Aerial, Location, FLU and Zoning Maps
8. Lake Worth Herald Advertisement Dates: February 25, 2021, March 25, 2021, and April 29, 2021

9.5 Resolution No. 2021-10 - Site Development Plan Amendment (SPR21-06) Special Exception Use (PSSE21-02) and Hours of Operation (PSV21-07) - Five Star Education - 2390 South Military Trail (*Quasi-Judicial Hearing*)
1. Proposed Resolution No. 2021-10 - Site Development Plan Amendment (SPR21-06) Special Exception Use ( PSSE21-02) and Variance (PSV21-07) - 2390 South Military Trail
2. Exhibit "A" Staff Report & Conditions of Approval
3. Project Narrative and Justification Statement
4. Warranty Deed
5. Aerial Map and Location Map
6. Site Plan, Landscape Plans, Architectural and Letter

9.6 Resolution No. 2021-11 - Site Development Plan Amendment (SPR21-05) and Special Exception Use (PSSE21-01) - Starbucks - 4380 Forest Hill Boulevard *(Quasi-Judicial Hearing)*
1. Proposed Resolution No. 2021-11 - Site Development Plan Amendment (SPR21-05) and Special Exception Use (PSSE21-01) - Starbucks - 4380 Forest Hill Boulevard
2. Exhibit "A" Staff Report & Conditions of Approvals
3. Project Narrative and Justification Statement
4. Site Plan, Landscape Plans, Architectural Plans and Letter
5. Warranty Deed
6. Color Site Plan and Color Rendering
7. Aerial Map and Location Map
8. Starbucks Observations - March 26, 2021 at Wellington location
9. Lake Worth Herald Advertisement - April 1, 2021

9.7 Public Workshop: Extraordinary Circumstances Necessitating and Justifying Impact Fees for Law Enforcement and Parks & Recreation
1. Impact Fee Study - Tindale Oliver - Final Report March 18, 2021
2. New Legislation - House Bill 337 - Impact Fees
3. Lake Worth Herald Advertisement on April 29, 2021 - Impact Fee Study Workshop

## 10. ACTIONS AND REPORTS

10.1 Presentation - Transportation / Mobility Study
1. Transportation / Mobility Plan Update - The Corradino Group

## 11. VILLAGE MANAGER COMMENTS

## 12. VILLAGE COUNCIL COMMENTS

## 13. ADJOURNMENT

**Next Meeting**

***THURSDAY, JUNE 10, 2021 AT 6:30 PM***

***If a person decides to appeal any decision made by this Council with respect to any matter considered at this meeting, he will need a record of the proceeding, and that for such purpose he may need to ensure that verbatim record of the proceedings is made, which record includes the testimony and evidence upon which the appeal is to be based.***

**VILLAGE COUNCIL MEETING MINUTES**
**Village Hall - Council Chambers**
**226 Cypress Lane | Palm Springs, FL 3461**
**Thursday, April 8, 2021 at 6:30 PM**

**COUNCIL**
- Mayor Beverly Smith
- Vice Mayor Gary Ready
- Mayor Pro Tem Doug Gunther
- Council Member Joni Brinkman
- Council Member Patti Waller

**ADMINISTRATION**
- Village Manager Richard Reade
- Village Attorney Glen Torcivia
- Village Clerk Kimberly Wynn

Persons who need an accommodation in order to attend or participate in this meeting should contact the Village Clerk at (561) 965-4010 at least three (3) business days prior to the meeting in order to request such assistance.

## 1. CALL TO ORDER:

Mayor Smith called the Regular Council meeting to order at 6:54 PM.

## 2. ROLL CALL:

**Present**: Mayor Bev Smith, Vice Mayor Gary Ready, Mayor Pro Tem Doug Gunther, Council Member Joni Brinkman, Council Member Patti Waller, Village Attorney Glen Torcivia, Village Manager Richard Reade, and Village Clerk Kimberly Wynn

**Absent**: None

**Staff Present**: Sergeant-at-Arms Tom Ceccarelli Police Chief, Chad Girard Assistant, Jossie Maliska Interim Library Director, Kim Glas-Castro Assistant Village Manager, Iramis Cabrera Interim Planning, Building and Zoning, Justin Lucas, Parks and Recreation Director, Marianna Ortega-Sanchez Assistant Finance Director and Thomas Cook IT Director.

**3. INVOCATION:**

Village Manager Reade led in the Invocation.

**4. PLEDGE OF ALLEGIANCE:**

Mayor Pro Tem Gunther led in the Pledge of Allegiance.

**5. ADDITIONS, DELETIONS, OR MODIFICATIONS, AND APPROVAL OF AGENDA**

Village Manager Reade noted additional information was provided to the Council before the meeting for Item 6.10, Approve Florida Mango Road Utility Relocation Design (Task Order No. 294) - Work Authorization WG - U01 - Professional Engineering Services -

Public Services Department (FY 2021 Budget - Water and Sewer Enterprise Fund - WGI. Item #10.2, Discussion - Village of Palm Springs Police Department Building Expansion Update & Options, will be moved to next month's agenda. Lastly, Item 10.4. was placed on the agenda under Actions and Reports as an Addendum.

Mayor Pro Tem Gunther made a motion to approve the agenda as presented, seconded by Vice Mayor Ready. The motion carries 5-0.

6. **CONSENT AGENDA** *(Public Comment on Consent Agenda Items is permissible prior to voting)*

6.1 Approval of March 11, 2021 Regular Village Council Meeting Minutes

- March 11, 2021 Village Council Regular Meeting Minutes

6.2 Resolution No. 2021-07 - Support Home Rule Authority - 2021 Florida Legislative Session

- Proposed Resolution No. 2021-07 - Support of Home Rule
- 2021 Legislative Appropriations Grants Priorities Issues - Village of Palm Springs Goals & Objectives - Village of Palm Springs
- Florida League of Mayors - Resolution on Preemption of Home Rule

6.3. Approve Independent Auditing Services Agreement (Extension) - 1st Amendment - Caler, Donten, Levine, Cohen, Porter and Veil, P.A.

- Proposed 1st Amendment to Agreement & Addendum - Caler, Donten, Levine, Cohen, Porter and Veil P.A.
- Approval to Extend Annual Independent Audit Services Agreement - Caler, Donten, Levine, Cohen, Porter & Veil, P.A.

- Approved Annual Independent Audit Services Agreement - 2016-2020 - Caler, Donten, Levine, Cohen, Porter & Veil, P.A.

6.4. Approve Park Connector Pathway Project Award - Sub- Phase II - Davis Road [Greenbrier to Lakewood] (Task Order No. 255) - Invitation to Bid (ITB) - Parks and Recreation Department (FY 2021 Budget Funded - CDBG & Sales Tax) - E&F Florida Enterprises, Inc. d/b/a Creative Contracting Group

- Proposed Agreement E&F Florida Enterprises, Inc. dba Creative Contracting Group Award Recommendation Letter - Wantman Group
- ITB #2021B-001 - Bid Tabulation Comparison of Unit Pricing
- Bid Submittal - E&F Florida Enterprises, Inc. d/b/a Creative Contracting Group
- Bid Submittal - R&D Paving LLC
- Bid Submittal - Waypoint Contracting
- ITB 2021B-001 - Park Connector Pathway SubPhase IIB
- ITB 2021B-001 - Park Connector Pathway Bid Plans
- ITB 2021-001 - Addendum No 1 - March 8, 2021 CIP Form - Park Connector Pathway

6.5. Approve Lakewood Gardens Park Concrete Replacement Award (Task Order No. 286)- Piggyback - Parks and Recreation Department (FY 2021 Funded - General Fund) - Flying Scot, Inc.

- Proposed Agreement - Lakewood Gardens Park Concrete Replacement Project - Flying Scot
- Proposal - Flying Scot - Village of Palm Springs Approval to Piggyback - Flying Scot
- ITB 2020-124PS - Approved Agreement - Flying Scot - City of Palm Beach Gardens ITB 2020-124PS - Award Recommendation - City of Palm Beach Gardens
- ITB 2020-124PS - Approved Pricing List - Flying Scot - City of Palm Beach Gardens ITB 2020-124PS - Bid Submittal Documents - Flying Scot - City of Palm Beach Gardens
- ITB 2020-124PS - Bid Announcement - City of Palm Beach Gardens
- ITB 2020-124PS - Invitation to Bid - City of Palm Beach Gardens - August 2, 2020 CIP Form - Lakewood Gardens Park

6.6. Approve Davis Road (Canal Road to 10th Avenue North) Stormwater Improvements (Stormwater Master Plan Project #7) Work Authorization CM-S01 (Task Order No. 291- Professional Engineering Services - Public Service Department (FY 2021 Budget - Stormwater Enterprise Fund) – Chen Moore and Associates, Inc.

- Proposed Work Authorization - Task Order #291 - Davis Road Stormwater Improvement Project - Chen Moore and Associates
- General Consulting Services Continuing Contracts - Chen Moore & Associates
- FY 2021 CIP Form -Davis Road Stormwater Improvement Project Stormwater Master Plan - Davis Road Stormwater Improvement Project

6.7. Approve Change Order No. 1 - Main Lift Station Piping Repair (LS No. 39) - Public Service Department (FY 2021 Budget - Water & Sewer Enterprise Fund) - Hinterland Group

- Proposed Change Order # 1 - Hinterland Group
- Approved Purchase Request to Repair Lift Station Piping - Main Lift Station LS No. 39 - Hinterland Group
- Executed Village of Palm Springs Agreement - Hinterland Group
- Village of Palm Springs Agreement - Contract Unit Prices - Hinterland Group

6.8. Approval to Rescind/Void Material Storage Bays at Main WTP Construction Services Contract (Task Order No. 258) - Invitation to Bid (ITB #2020B-007) - Republic Construction

- E-mail Notification that Republic Construction (competitively awarded vendor) would not be proceeding with Construction Services Contract for the Material Storage Bays at Main WTP

6.9. Acceptance of Utility Easement Agreement - 2755 10th Avenue North - USA Auto Wash, Inc.

- Proposed Utility Easement Agreement - USA Auto Wash, Inc. - 2755 10th Avenue North
- Sketch & Description

- Aerial & Location Map - 2755 10th Avenue North

6.10. Approve Florida Mango Road Utility Relocation Design (Task Order No. 294) – Work Authorization WG-U01 – Professional Engineering Services - Public Service Department (FY 2021 Budget - Water and Sewer Enterprise Fund) – WGI

- Proposed Work Authorization - Task Order #294 - Proposed Florida Mango Road Utility Relocation Project - Design & Engineering - WGI
- General Engineering Consulting Services Continuing Contract - WGI
- FY 2021 CIP Form - Proposed Florida Mango Road Utility Relocation Project - Design & Engineering
- (Additional Information) Public Notice FL Mango Road
- (Additional Information) Florida Statutes Chapter 337.401

6.11 Approve Resilience Assessment and Emergency Response Plan – Work Authorization EE-U09 – Professional Engineering Services - Public Service Department (FY 2021 Budget - Water and Sewer Enterprise Fund) – Eckler Engineering, Inc.

- Proposed Work Authorization No. EE-U09 - Proposed Resilience Assessment (RRA) and Emergency Response Plan (ERP) - Professional Engineering Services - Eckler Engineering
- Utility Engineering Consulting Services Continuing Contract - Eckler Engineering

**END OF CONSENT AGENDA**

Council Member Waller made a motion to approve the Consent Agenda, seconded by Council Member Brinkman. The motion carries 5-0.

## 7. PRESENTATIONS

7.1. Water Conservation Month Proclamation - April 2021

- Water Conservation Month Proclamation - April 2021

Mayor Smith read the proclamation into the record and presented it to Assistant Public Service Director, Mr. Chad Girard.

7.2. National Public Safety Telecommunicators Week - April 11-17, 2021

- Proclamation - Public Safety Telecommunicators Week

Mayor Smith read the proclamation into the record and presented it to Police Chief Tom Ceccarelli. Chief Ceccarelli and the Village Manager gave comments.

7.3. National Library Week in Palm Springs Proclamation

- National Library Week in Palm Springs Proclamation

Mayor Smith read the proclamation into the record and presented it to the Interim Library Services Director, Ms. Jossie Maliska. Mayor Smith commented on the services the library provides to the community.

7.4. National Arbor Day Proclamation - April 30, 2021

- National Arbor Day Proclamation - April 30, 2021

Mayor Smith read the National Arbor Day proclamation into the record and presented it to the Assistant Public Service Director, Chad Girard. She also invited everyone out to the Arbor Day event on April 30th at 10:00 AM.

7.5 Municipal Clerks Week - May 2-8, 2021

- Municipal Clerks Week - May 2-8, 2021

Mayor Smith read the proclamation into the record and presented it to the Village Clerk, Kimberly Wynn.

**8. PUBLIC COMMENT *The public shall be limited to three (3) minutes to speak on agenda or non-agenda item(s)***

At this time, Mayor Smith offered the public an opportunity to speak on agenda and non-agenda items. There were no comments from the public.

**9. PUBLIC HEARINGS**

9.1 Proposed Ordinance No. 2021-03 - Village Code Amendment - Chapter 34 - Law Enforcement and Parks & Recreation Impact Fees (*First Reading*)

- Proposed Ordinance No. 2021-03 - Law Enforcement and Parks & Recreation Impact Fees
- Schedule of Maximum Potential Impact Fee Rates (Proposed) - Law Enforcement and Parks & Recreation
- Impact Fee Study - Tindale Oliver - draft March 18, 2021
- Calculated Percentages of Maximum Potential Impact Fee Rates - Law Enforcement and Parks and Recreation
- Resolution No. 2012-53 - Current Impact Fee Schedule Tindale-Oliver Presentation - Impact Fee Summary

Village Manager Reade read the staff's report into the record. Mrs. Glas-Castro introduced Ms. Nilguin Kamp, a consultant with Tindale-Oliver. Ms. Kamp gave a presentation on Impact Fees. Impact fees were not updated for the Village in a while. She discussed the new law that now placed the burden of proof on the government for impact fees. Ms. Kamp talked about her findings from the study.

The Village of Palm Spring's Law Enforcement impact fees is the second-lowest rate in the jurisdiction compared to other neighboring cities. She briefly discussed the Levels of Service (LOS) in the Parks & Recreation Department. Mayor Smith asked why the numbers were higher for mobile home parks versus multi-family and residential homes. She wanted to know if the most recent data was taken into consideration (2020 Census). Council Member Brinkman asked about waived or reduced fees being offered for Community Redevelopment Agency (CRA) properties. If other incentives could be offered in the future. The Assistant Village Manager, Mrs. Glas-Castro said that incentives can be offered with stipulations.

Ms. Kamp talked about the next steps of the Village.

At this time, Mayor Smith offered the public an opportunity to speak on Ordinance No. 2021-03. There were no public comments.

Village Attorney Torcivia read the title of the caption into the record.

Vice Mayor Ready made a motion to approve Ordinance No. 2021-03, seconded by Council Member Waller. The motion to approve 5-0.

9.2 Ordinance No. 2021-04 - Village of Code Amendment - Chapter 34 – Special Events (*First Reading)*

- Proposed Ordinance No. 2021-04 - Village Code - Chapter 34 - Special Events

Village Manager Reade read the presentation from staff into the record. He said that Ordinance No. 2021-04 is to clarify the definition of a special event. Mayor Smith offered the public and Council an opportunity to speak on Ordinance No. 2021-04. There were no comments from the public.

Council Member Brinkman asked about the noise clause (Section 34.896[10]).

Village Attorney Torcivia read the title of the caption into the record.
Mayor Pro Tem Gunther made a motion to approve Ordinance No. 2021-04, seconded by Council Member Brinkman. The motion carries 5-0.

9.3 Ordinance 2021-02 - Land Use and Rezoning (Small-Scale) Amendments - Fontana Townhomes - 4063 Davis Road & 4090 Coconut Road (Quasi-Judicial Hearing) (*First Reading*)

- Proposed Ordinance No. 2021-02 - Comprehensive Plan (Small Scale) Land Use
- Map & Rezoning Amendment - 4063 Davis Road & 4090 Coconut Road

- Exhibit "A" Staff Report & Conditions of Approval (combined for both applications)
- Applicant's Justification Statements
- Proposed Site Plan, Landscape Plans, Building Elevations (informational Only)
- Color Site Plan and Color Rendering (informational only)
- Aerial, Location, FLU and Zoning Map

Mayor Smith introduced this item. She asked the Council to disclose any ex parte communication - there was none. Village Clerk Wynn stated that Ordinance No. 2021-02 was advertised in the Lake Worth Herald. The Village Clerk swore in the applicants (WGI and Meritage Homes) that may give testimony in this proceeding.

Village Manager Reade presented staff's report into the record.

Mr. Jerrod Bursar with WGI, located at 2035 Vista Parkway, West Palm Beach, gave the applicant's presentation. He talked about the amenities and development of the project and explained the property is fee simple. Council Member Waller asked about the enforcement of the rules. They are going to be enforced by property management.

There was a discussion about some of the rules that would be put in place. Mayor Pro Tem Gunther asked if the roads would be private during the platting process. Mr. Bursar answered the roads would be private. The estimated price (depending on the market) may start at $280,000 and the number of units in the development is fifty-nine (59).

At this time, Mayor Smith offered the public an opportunity to speak on Ordinance No. 2021-02. There were no further comments.

Village Attorney Torcivia read the title of the caption into the record.

Council Member Brinkman made a motion to approve Ordinance No. 2021-02, seconded by Vice Mayor Ready. The motion carries 5-0.

## 10. ACTIONS AND REPORTS

10.1 Temporary Use Permit - Storage Containers and Contractors Trailers - 4280 Lakewood Road

- Proposed Temporary Use Permit Agreement
- Proposed Site Logistics Plan (Exhibit "B" to Agreement) Applicant Proposed Temporary Use Narrative
- Aerial and Location Maps
- Sec. 34- 895 Temporary Land Uses in zoning Districts - Land Development Approved Resolution No. 2018-04 and Site Plan - 4280 Lakewood Road

Village Manager Reade read the staff's report into the record.

Mayor Smith offered the Council an opportunity to speak on this item. Council Member Brinkman asked Mr. Smuts if there were two separate trailers on the site. Mr. Smuts explained there is an Owner Management and Construction Management trailer on site. He said that management likes to keep them separate.

Council Member Waller made a motion to approve a Temporary Use Permit for 4280 Lakewood Road, seconded by Mayor Pro Tem Gunther. The motion carries 5-0.

10.2 Discussion - Village of Palm Springs Police Department Building Expansion Update Options *(STAFF HAS REQUESTED THIS ITEM BE POSTPONED)*

10.3 Discussion - Proposed American Rescue Plan Act of 2021 (ARP) Funding & Options

Village Manager Reade introduced Marianna Ortega to explain this item and how these funds can be used. She explained that approximately $10.5 million were assigned to the Village. Currently, the state does not have a say in how the money is spent. Information is being disseminated periodically. Whatever projects the Village chooses, they have to keep in mind that December 21st is the deadline to spend the ARP funds, and they have to be specific about how the funds are spent. Four areas that can be chosen.

Mayor Pro Tem Gunther commented on the regulations. Ms. Ortega elaborated on the stipulations.

10.4 Discussion - Proposed Res. No. 2021-12 - CPF for Park Connector Pathway

- Proposed Res. No. 2021-12 - Federal Community Project Funding for the Park Connector Pathway System (Revised)
- Resolution No. 2021-12

The Village Manager introduced this item. He talked about the urgency to get approval from Council to qualify for the grant. Vice Mayor Ready asked if the Village was going to apply for this grant with Greenacres. Village Manager Reade said that because the grant is a small amount, the Village is not going to apply with Greenacres.

Village Attorney Torcivia read the caption of the title into the record.

Mayor Pro Tem Gunther made a motion to approve Resolution No. 2021-12, seconded by Vice Mayor Ready. The motion carries 5-0.

Recommend for approval Mayor Pro Tem Gunther made a motion to approve Resolution No. 2021-12, seconded by Vice Mayor Ready. The motion carries 5-0.

The Village Manager introduced this item. He talked about the urgency to get approval from Council to qualify for the grant. Vice Mayor Ready asked if the Village was going to apply for this grant with Greenacres. Village Manager Reade said that because the grant is a small amount, the Village is not going to apply with Greenacres.

Village Attorney Torcivia read the caption of the title into the record.

Mayor Pro Tem Gunther made a motion to approve Resolution No. 2021-12, seconded by Vice Mayor Ready. The motion carries 5-0.

## 11. VILLAGE MANAGER COMMENTS

Village Manager Reade gave routine comments on staff and daily operations.

## 12. VILLAGE COUNCIL COMMENTS

Vice Mayor Ready gave a summary of the events he had attended since the last meeting. Mayor Pro Tem Gunther thanked staff and recognized Water Conservation Month. Council Member Brinkman enjoyed the CRA presentation. She also talked about an abundance of garbage in and around a canal. Council Member Waller talked about sidewalk sealant around the Village complex. There is a broken sprinkler head near the tennis courts in the municipal complex. Mayor Smith discussed some of the activities in the Village. She talked about the safety on Lake Worth Road (traffic), especially since they moved the homeless

people out of John Prince Park. She recommended that we contact the Homeless Coalition for assistance. Mayor Smith thanked IT and Finance for getting the facts and keeping the Village safe.

At this time, Mayor Smith invited Tracy Adams from PBCFR to come to say a few words.

Fire Chief Tracy Adams discussed the Annual Report for Palm Beach County. She said there was 433 calls total, and about 80% of those calls were medical-related. Vice-Mayor Ready asked if there was an increase in cost/volume since COVID-19. Fire Chief Adams confirmed the volume increased, but she did not have the financials. She can get Vice Mayor Ready's question to her Finance Department. She left a copy of the annual report for the Council

**13. ADJOURNMENT**

Hearing no further business, the meeting was adjourned at 8:44 PM

**ATTEST:**

_____

Bev Smith, Mayor

The undersigned is the Village Clerk of Palm Springs, Florida, and the information provided herein is the Minutes of the Regular Council Meeting held on **April 8, 2021**. Which minutes were formally approved and adopted by the Village Council on **May 13, 2021.**

_____

Kimberly M. Wynn, Village Clerk

*If a person decides to appeal any decision made by this Council with respect to any matter considered at this meeting, he will need a record of the proceeding, and that for such purpose he may need to ensure that a verbatim record of the proceedings is made, which record includes the testimony and evidence upon which the appeal is to be based. Persons who need an accommodation in order to attend or participate in this meeting should contact the Village Clerk at (561) 965-4010 at least 3 business days prior to the meeting in order to request such assistance.*

**LOCAL PLANNING AGENCY BOARD REGULAR MEETING MINUTES**

**Village Hall - Council Chambers**

**226 Cypress Lane | Palm Springs, FL 3461**

**Thursday, April 8, 2021 at 6:30 PM**

**COUNCIL**

- Mayor Beverly Smith
- Vice Mayor Gary Ready
- Mayor Pro Tem Doug Gunther
- Council Member Joni Brinkman
- Council Member Patti Waller

**ADMINISTRATION**

- Village Manager Richard Reade
- Village Attorney Glen Torcivia
- Village Clerk Kimberly Wynn

*Persons who need an accommodation in order to attend or participate in this meeting should contact the Village Clerk at (561) 965-4010 at least three (3) business days prior to the meeting in order to request such assistance.*

## 1. CALL TO ORDER

Mayor Bev Smith called the meeting to order at 6:42 PM

## 2. ROLL CALL

**Present**: Mayor Bev Smith, Vice Mayor Gary Ready, Mayor Pro Tem Doug Gunther, Council Member Joni Brinkman, Council Member Patti Waller, Village Attorney Glen Torcivia, Village Manager Richard Reade and Village Clerk Kimberly Wynn

**Absent**: None

**Staff Present**: Sergeant-at-Arms Tom Ceccarelli Police Chief, Chad Girard Assistant Public Service Director, Jossie Maliska Interim Library Director, Kim Glas-Castro Assistant Village Manager, Iramis Cabrera Interim Planning, Building and Zoning, Justin Lucas, Parks and Recreation Director, Marianna Ortega-Sanchez Assistant Finance Director and Thomas Cook IT Director.

## 3. AGENDA

*Public Hearing for amending the Comprehensive Land Use Plan by revising the Future Land Use Map and amending the Official Land Development District Zoning Map of the Village by amending and rezoning the following properties in the Village of Palm Springs.*

3.1 Ordinance 2021-02 - Land Use and Rezoning (Small-Scale) Amendments - Fontana Townhomes - 4063 Davis Road & 4090 Coconut Road (Quasi-Judicial Hearing) (*First Reading*)

- Proposed Ordinance No. 2021-02 - Comprehensive Plan (Small Scale) Land Use Map & Rezoning Amendment - 4063 Davis Road & 4090 Coconut Road
- Exhibit "A" Staff Report & Conditions of Approval (combined for both applications)
- Applicant's Justification Statements
- Proposed Site Plan, Landscape Plans, Building Elevations (informational Only) Color Site Plan and Color Rendering
- Aerial, Location, FLU and Zoning Map

Mayor Smith asked the LPA Board to disclose any ex parte communication – there was none. There were no applicants present to give testimony that needed to be sworn by the Clerk. The Village Clerk read the statement of advertisement. Village Manager Reade presented the staff's presentation for the record.

At this time, the Mayor offered the public and LPA an opportunity to speak on Ordinance No. 2021-02. There were no comments.

Village Attorney Torcivia read the title of the caption into the record.

Council Member Brinkman made a motion to approve Ordinance No. 2021-02, seconded by Council Member Waller. The motion carries 5-0.

**ADJOURNMENT**

Hearing no further business, Mayor Smith adjourned the meeting at 6:54 PM.

**ATTEST:**

_____

Bev Smith, Mayor

The undersigned is the Village Clerk of Palm Springs, Florida, and the information provided herein is the Minutes of the Local Planning Agency Meeting held on **April 8, 2021**. Which minutes were formally approved and adopted by the Village Council on **May 13, 2021.**

_____

Kimberly M. Wynn, Village Clerk

*If a person decides to appeal any decision made by this Council with respect to any matter considered at this meeting, he will need a record of the proceeding, and that for such purpose he may need to ensure that a verbatim record of the proceedings is made, which record includes the testimony and evidence upon which the appeal is to be based.*

# Village of Palm Springs

# Executive Brief

**AGENDA DATE:** May 13, 2021

**DEPARTMENT:** Library

---

**ITEM 6.3:** Approval of Joseph L. Fallon Scholarship Awards - Five (5) Scholarship Awards

**SUMMARY:**

Each year, the Village of Palm Springs awards scholarships to selected high school seniors who live within the Village. In 1996, the annual Village scholarship was named in memoriam for Palm Springs resident and library volunteer Joseph Fallon, who died suddenly during his senior year at John I. Leonard High School.

This year, the Village Council is expected to present five (5) Joseph L. Fallon Scholarship awards to applicants based financial need, grades, experience and personal appraisal.

The recommended 2021 Fallon Scholarship winners include:

- **Elizabeth Anderson:** Elizabeth is a student at Greenacres Christian Academy and plans to attend Palm Beach State College in Lake Worth, FL. Her major is Elementary Education.
- **Natalya Gertner:** Natalya is a student at G-Star of the Arts and plans to attend Florida Atlantic University in Boca Raton, FL. Her major is English.
- **Natalie Gutierrez:** Natalie is a student at Forest Hill Community High School and plans to attend The University of Miami in Coral Gables, FL or The University of Central Florida in Orlando, FL. Her major is Information Technology/Computer Science.
- **Andre Noble:** Andre is a student at John I. Leonard High School and plans to attend Florida A&M University in Tallahassee, FL. or Palm Beach State in Lake Worth, FL. His major is Emergency Services.

- **Humberto Sigler:** Humberto is a student at Forest Hill Community High School and plans to attend Palm Beach State College in Lake Worth, FL. His major is Psychology.

The Fallon Scholarship Committee met on April 22, 2021, and recommended approval of five (5) scholarship awards to local, Village high school students to assist with their plans to attend college.

If approved by the Village Council, each of the awardees will be presented with a check during the May 13, 2021 Village Council Meeting (Presentations Section).

Note: The Joseph L. Fallon Scholarship Selection Committee includes the following individuals:

- Council Member Patti Waller - Chair
- Village Manager Richard Reade - Vice Chair
- Police Chief Tom Ceccarelli - Committee Member
- Assistant Village Manager - Kim Glas-Castro - Committee Member
- Library Board Member Robin Hughes - Committee Member

**FISCAL IMPACT:**

Funding to support the proposed awards is available within the FY 2021 Budget - General Fund.

**ATTACHMENTS:**

All attachments related to this item are available within the Village Clerk's Office.docx

NEED TO ADD ATTACHMENT – PLACE HOLDER ON AGENDA BACKUP

# Village of Palm Springs

# Executive Brief

**AGENDA DATE:** May 13, 2021

**DEPARTMENT:** Parks & Recreation

---

**ITEM 6.4:**

Approve 4th of July Fireworks Display Vendor - Parks and Recreation Department (FY 2021 Funded - General Fund) - Exposhows, Inc.

**SUMMARY:**

The Parks and Recreation Department has identified a need to select a vendor to provide the fireworks display for the Village's annual 4th of July Fireworks event that will be held on Sunday, July 4, 2021 at the Village Center Complex. With the ongoing COVID-19 pandemic, staff is attempting to provide a 4th of July event that will help Village residents celebrate this important American holiday, while maintaining CDC requirements for social distancing and limiting large group gatherings.

As a result, the Village requested quotes from various vendors and received the following two (2) proposals:

| | |
|---|---|
| Exposhows, Inc. | $21,800 for a 18-minute display with a 2-minute grand finale |
| Zambelli Fireworks Manufacturing Company | $20,000 for a 18 to 19-minute display with a 1-minute grand finale |

Staff recommends approval of the proposed agreement with Exposhows in the amount of $21,800 to provide the fireworks display for the Village's 4th of July celebration. This vendor, while submitting a higher quote, is providing a two (2) minute finale and utilizing larger diameter shells. The use of larger diameter shells will allow for a higher reach and thus provide residents the opportunity to see the show from their residences. If approved, a certificate of insurance will be provided prior to the event and the proposed vendor would be

responsible for meeting all Village and County permitting guidelines/requirements.

Note: The Village is working with local businesses to assist in sponsoring the Village's 4th of July fireworks display, which would provide financial assistance in offsetting the cost of the increased fireworks display.

The proposed agreement has been prepared by the Village Attorney and reviewed by the Parks and Recreation Director, Program Supervisor II, the Police Chief, Assistant Police Chief, Assistant Public Works Director and the Finance Director.

The Village contracted with this vendor in 2020 and the feedback from the community was very positive and supportive of the product displayed. In addition, the vendor was well received by the Village's Operations Team for the event (Assistant Police Chief, Parks and Recreation Department and Public Service Department) as well as Palm Beach County Fire Rescue.

**FISCAL IMPACT:**

Funding to support the 4th of July fireworks display is available within the approved FY 2021 Budget - General Fund.

| ***FY 2021 Budget - General Fund (Special Events):*** | |
|---|---|
| FY 2021 Approved Budget - General Fund | $23,975 |

| ***Expected Event Costs:*** | |
|---|---|
| Proposed Event Cost - 4th of July Fireworks - Exposhows | $21,800 |

Note: The proposed budget for the 4th of July event included funding to support various activities and programs (i.e., giveaways, games, equipment rentals, entertainment, etc.), which will be utilized to support the additional fireworks display cost. These additional activities and programs will be offered on a smaller scale this year due to the COVID-19 restrictions that we are currently facing. Further, the Village Hall Complex and parking lot is expected to be restricted to a limited number of Palm Springs residents only to ensure the safest environment possible during this event.

**ATTACHMENTS:**

Proposed Agreement - Exposhows, Inc.
Cost Proposal and Specifications - Village of Palm Springs
Exposhows - Certificate of Liability Insurance
Zambelli Fireworks - Fireworks Proposal

# COMMUNITY FIREWORKS DISPLAY CONTRACT

This Community Fireworks Display Contract ("Contract" hereafter) is entered into between the VILLAGE OF PALM SPRINGS, a Florida municipal corporation ("VILLAGE" hereafter), and EXPOSHOWS, INC., a company authorized to conduct business in the State of Florida, with a mailing address of P.O. Box 5590, Santa Monica, CA 90409 ("VENDOR" hereafter).

## RECITALS

**WHEREAS**, the VILLAGE is in need of a Vendor to provide a community fireworks display for the VILLAGE's 4th of July Fireworks Display (hereinafter the "Services");

**WHEREAS**, VENDOR submitted a proposal to perform the Services, attached hereto as Exhibit "A" (the "Proposal");

**WHEREAS**, the VILLAGE desires to accept VENDOR's Proposal in order for VENDOR to render the Services to the VILLAGE as provided herein;

**WHEREAS**, the VENDOR further warrants that it is experienced and capable of performing the Services hereunder in a professional and competent manner; and,

**WHEREAS**, the VILLAGE finds approving this Contract with the VENDOR as described herein serves a valid public purpose.

**NOW THEREFORE**, the VILLAGE hereby engages the Services of the VENDOR, and in consideration of the mutual promises herein contained, the sufficiency of which is hereby acknowledged by both parties, the parties agree as follows:

I. Term of Contract: The term of this Contract shall begin upon approval by both parties and shall terminate upon the conclusion of the fireworks show or termination as set forth below.

II. Scope of Services:
    2.1 The scope of Services to be provided under this Contract is as set forth in the

Contract and the VENDOR's Proposal (see Exhibit "A"). The VILLAGE's cancellation of the Display shall only be effective upon receipt by the VENDOR of a written notice from the VILLAGE's authorized Project Manager. In the event the VILLAGE cancels the Display the VILLAGE shall not be entitled to a refund of its deposit, but the Village shall not be required to pay any further charges.

However, if the Display is cancelled due to inclement weather, as determined in the sole discretion of the VILLAGE, then the Display shall be postponed and fired on the

Postponement Date. Postponement Dates shall be agreed to by the parties. If the VILLAGE wishes to cancel the Display instead of scheduling a Postponement Date, the Display will be cancelled and there will be no refund of the Deposit.

2.2 The VENDOR represents to the VILLAGE that the Services to be performed under this Contract shall be in accordance with accepted and established trade practices and procedures recognized in the VENDOR's trade in general and that the VENDOR's Services shall conform to the highest standards and in accordance with this Contract.

2.3 The VENDOR represents that it is licensed to do business in the State of Florida and holds and will maintain all applicable licenses required for the Services to be completed under this Contract. The VENDOR further warrants its capability and experience to perform the Services provided for herein in a professional and competent manner and consistent with all applicable laws.

III. USE OF AGENTS OR ASSISTANTS: To the extent reasonably necessary to enable the VENDOR to perform its Services hereunder, the VENDOR shall be authorized to engage the services of any agents or assistants which it may deem proper, and may further employ, engage, or retain the services of such other persons or corporations to aid or assist in the proper performance its duties. All costs of the services of, or expenses incurred by, such agents or assistance shall be paid by the VENDOR.

IV. PROJECT MANAGEMENT: Both parties shall appoint a Project Manager who shall meet to coordinate, review and insure performance by the VENDOR under this Contract. The Project Manager appointed by the VILLAGE will oversee the administration of the Services to be performed by the VENDOR under this Contract but is not authorized to modify this Contract.

V. EQUIPMENT: The VENDOR shall provide all equipment necessary to complete the Services to be performed hereunder. In the event VENDOR requires equipment from the VILLAGE, the VENDOR shall meet and confer with the VILLAGE before Services commence. In the event the VILLAGE's equipment is to be utilized, any costs chargeable to the VENDOR shall be agreed upon in advance of the commencement of the Services.

VI. FEE AND ORDERING MECHANISM

6.1 For actual Services performed under this Contract for each year of the Display (including any renewals agreed to by the VILLAGE), the VILLAGE shall pay the VENDOR a fee as follows: Twenty-One Thousand, Five Hundred Dollars ($21,500.00) 50% paid on execution of this Contract, with the remaining amount paid upon conclusion of the event.

6.2 Should the VILLAGE require additional Services not included in this Contract, fees and payment for such additional Services will be set forth in a separate amendment, as authorized in accordance with the VILLAGE's procurement code prior to any such additional Services being performed by the VENDOR.

6.3 The Village's ordering mechanism for all Services performed under this Contract shall be a Village Purchase Order; however, the terms and conditions stated in a Village Purchase Order shall not apply. VENDOR shall not perform Services under this Contract without a Village Purchase Order specifically for this purpose. VENDOR shall not perform work which is out of scope, nor exceed any not to exceed amounts expressed on the Purchase Order. Note that the Village's Fiscal Year ends on September 30th of each calendar year. The Village cannot authorize Services beyond September 30th of each calendar year, prior to the annual budget being approved by the Village Commission. Additionally, the Village must have budgeted appropriate funds for the Services in any subsequent Fiscal Year. If the budget is approved for said Services, the Village will issue a new Purchase Order each Fiscal Year for required and approved Services.

VII. MAXIMUM COSTS: The VENDOR expressly acknowledges and agrees that the total cost to complete all Services is as specified herein and no additional costs shall be authorized without prior written approval from VILLAGE.

VIII. INVOICE: The VENDOR shall submit an invoice to the Project Manager for approval prior to receiving compensation.

IX. DEFAULTS, TERMINATION OF CONTRACT

9.1 If the Project Manager deems that the VENDOR is in default for failure to supply an adequate working force or has failed in any other respect to satisfactorily perform the Services specified in this Contract; or, is in material breach of a term or condition of this Contract, the Project Manager may give written notice to the VENDOR specifying defaults to be remedied within ten (10) days. Such notice shall set forth the basis for any dissatisfaction and suggest corrective measures. If the VENDOR does not remedy defaults within ten (10) days or commence good faith steps to remedy the default to the reasonable satisfaction of the Project Manager, the VILLAGE may take such action to remedy the default and all expenses related thereto shall be borne by the VENDOR including, without limitation, utilization of another Vendor to provide for such Services; and/or, the VILLAGE may withhold any money due or which may become due to the VENDOR for such expense and/or Services related to the claimed default. Alternatively, or in addition to the foregoing, if after ten (10) days the VENDOR has not remedied defaults or commenced good faith steps to remedy defaults to the satisfaction of the Project

Manager, the VILLAGE may elect to terminate this Contract. No compensation shall be paid for de-mobilization, take-down, disengagement wind-down, lost profits or other costs incurred due to termination of this Contract under this paragraph 9.1.

9.2 Notwithstanding paragraph 9.1, the VILLAGE reserves the right and may elect to terminate this Contract at any time without cause and for convenience. At such time, the VENDOR would be compensated as set forth above.

X. INSURANCE

10.1 The VENDOR shall, at its own expense, procure and maintain throughout the term of this Contract, with insurers acceptable to the VILLAGE, the types and amounts of insurance conforming to the following requirements:

10.2 The VENDOR shall furnish proof of Workers' Compensation Insurance, General Liability Insurance and Comprehensive Automobile Liability Insurance. The coverage is to remain in force at all times during the Contract period. The following minimum insurance coverage is required. The VILLAGE shall be added as an "additional insured" with relation to General Liability and Automobile Insurance. Any costs for adding the VILLAGE as "additional insured" will be at the VENDOR's expense.

**Workers' Compensation and Employers' Liability Insurance**
Limits: Workers' Compensation – Statutory Limits
Employers' Liability - $1,000,000.00

**Commercial General Liability Insurance**

Covering premises-operations, products-completed operations, independent Vendors and Contractual liability as required by the RFP.

Limits: Combined single limit bodily injury/property damage $1,000,000.

This coverage must include:

a. Coverage for the liability assumed by the Vendor under the indemnity provision of the Contract.
b. The VENDOR's coverage is primary and the VILLAGE's coverage is non-contributory.

**Automobile Liability Insurance**
Covering all owned, hired and non-owned automobile equipment.

Limits: Bodily injury $250,000 each person
$500,000 each occurrence

| | |
|---|---|
| Property damage | $100,000 each occurrence |
| Or combined single limit | $1,000,000 (bodily injury and property damage combined) |

Certificate holder should be addressed as follows:
Village of Palm Springs
226 Cypress Lane
Palm Springs, FL 33461

10.3 It is agreed by and between the VENDOR and the VILLAGE that in the event any person, firm or corporation should sustain damages not covered by the insurance furnished by the VENDOR as herein provided or in excess of the limits of said insurance, then in that event, the VENDOR agrees to indemnify and hold harmless the VILLAGE.

10.4 The VENDOR shall not commence Services until the required insurance is in force and evidence of insurance acceptable to the VILLAGE has been provided to, and approved by, the VILLAGE. Until such insurance is no longer required by this Contract, the VENDOR shall provide the VILLAGE with renewal or replacement evidence of insurance at least thirty (30) days prior to the expiration or termination of such insurance.

10.5 The insurance provided by the VENDOR shall apply on a primary basis. Any insurance, or self-insurance, maintained by the Village shall be excess of, and shall not contribute with, the insurance provided by the VENDOR. Except as otherwise specified, no deductible or self-insured retention is permitted.

10.6 Compliance with these insurance requirements shall not limit the liability of the VENDOR. Any remedy provided to the VILLAGE by the insurance provided by the VILLAGE shall be in addition to and not in lieu of any other remedy (including, but not limited to, as an indemnitee of the VENDOR) available to the VILLAGE under this Contract or otherwise.

10.7 Neither approval nor failure to disapprove insurance furnished by the VENDOR shall relieve the VENDOR from responsibility to provide insurance as required by this Contract.

10.8 The VENDOR's failure to obtain, pay for, or maintain any required insurance shall constitute a material breach upon which the VILLAGE may immediately terminate or suspend this Contract. In the event of any termination or suspension, the VILLAGE may use the services of another Vendor without the VILLAGE incurring any liability to the VENDOR.

10.9 At its sole discretion, the VILLAGE may obtain or renew the VENDOR's insurance, and the VILLAGE may pay all or part of the premiums. Upon demand, the VENDOR shall repay the VILLAGE all monies paid to obtain or renew the insurance. The

VILLAGE may offset the cost of the premium against any monies due the VENDOR from the VILLAGE.

XI. WAIVER OF BREACH: The waiver of either parts of any breach of any provision of this Contract shall not operate or be construed as a waiver of any subsequent breach of that same or any other provision.

XII. INDEMNITY:

12.1 The VENDOR shall indemnify, defend and hold harmless, to the maximum extent permitted by law, the VILLAGE and its officers, agents, employees and representatives, from and against any and all liability, suits, actions, proceedings, judgments, claims, losses, liens, damages, injuries (whether in contract or in tort, including personal injury, accidental death or property damage, and regardless, of whether the allegations are false, fraudulent or groundless), costs and expenses (including attorney's fees for all litigation, arbitration, mediation, appeal expenses) ("Claims" hereafter) to the extent arising out of or related to the acts or neglect of its agents, employees, subVendors or by anyone the VENDOR directly or indirectly employed in the performance of the Services.

12.1 The VENDOR's obligation to indemnify, defend and hold harmless shall remain in effect and shall be binding upon the VENDOR whether such injury or damage shall accrue, or may be discovered, before or after termination of this Contract.

12.2 The VENDOR's failure to comply with this section's provisions shall constitute a material breach upon which the VILLAGE may immediately terminate or suspend this Contract.

XIII. ENTIRE CONTRACT AND ORDER OF PRECEDENCE

13.1 This Contract consists of the terms and conditions provided herein, and, the VENDOR's proposal. To the extent that there exists a conflict between this Contract and the remaining documents, the terms, conditions, covenants, and/or provisions of this Contract shall prevail. Wherever possible, the provisions of such documents shall be construed in such a manner as to avoid conflicts between provisions of the various documents.

13.2 This Contract supersedes any and all other Contracts, either oral or in writing, between the parties hereto with respect to the subject matter hereof, and no other Contract, statement, or promise relating to the subject matter of this Contract which is not contained herein shall be valid or binding.

XIV. ASSIGNMENT

14.1 Nothing under this Contract shall be construed to give any rights or benefits to any party other than the VILLAGE and the VENDOR. All duties and responsibilities under this Contract shall be for the sole and exclusive benefit of the

VILLAGE and the VENDOR and not for the benefit or any other party. The VENDOR shall not assign any right or interest in this Contract, and shall not delegate any duty owned, without the VILLAGE's prior written consent. Any attempted assignment or delegation shall be void and totally ineffective for all purposes, and shall constitute a material breach upon which the VILLAGE may immediately terminate or suspend this Contract.

14.2 In the event the VILLAGE consents to an assignment or delegation, the assignee, delegate, or its legal representative shall agree in writing to personally assume, perform, and be bound by this Contract's covenants, conditions, obligations and provisions.

XV. SUCCESSORS AND ASSIGNS: Subject to the provision regarding assignment, this Contract shall be binding on the heirs, executors, administrators, successors, and assigns of the respective parties.

XVI. WAIVER OF TRAIL BY JURY: TO ENCOURAGE PROMPT AND EQUITABLE RESOLUTION OF ANY LITIGATION, EACH PARTY HEREBY WAIVES ITS RIGHTS TO A TRIAL BY JURY IN ANY LITIGATION RELATED TO THIS CONTRACT.

XVII. GOVERNING LAW AND REMEDIES:

17.1 The validity of this Contract and of any of its terms or provisions, as well as the rights and duties of the parties hereunder, shall be governed by the laws of the State of Florida and venue shall be in Palm Beach County, Florida.

17.2 No remedy herein conferred upon any party is intended to be exclusive of any other remedy, and each and every such remedy shall be cumulative and shall be in addition to every other remedy given hereunder or now or hereafter existing at law or in equity or by statute or otherwise. No single or partial exercise by any party of any right, power, or remedy hereunder shall preclude any other or further exercise thereof.

XVIII. TIME IS OF THE ESSENCE: Time is of the essence in the completion of tasks and services as specified herein.

XIX. NOTICES: All notices hereunder must be in writing and, unless otherwise provided herein, shall be deemed validly given on the date when personally delivered to the address indicated below; or on the third (3rd) business day following deposit, postage prepaid, using certified mail, return receipt requested, in any U.S. postal mailbox or at any U.S. Post Office; or when sent via nationally recognized overnight courier to the address indicated below. Should the VILLAGE or the VENDOR have a change of address, the other party shall immediately be notified in writing of such change, provided, however, that each address for notice must include a street address and not merely a post office

box. All notices, demands or requests from the VENDOR to the VILLAGE shall be given to the VILLAGE address as follows:

Village Manager
Village of Palm Springs
226 Cypress Lane
Palm Springs, Florida 33461

All notices, demands or requests from the VILLAGE to the VENDOR shall be given to the VENDOR address as follows:

Exposhows, Inc.
P.O. Box 5590
Santa Monica, CA 90409

XX. SEVERABILITY: Should any part, term or provision of this Contract or any document required herein to be executed be declared invalid, void or unenforceable, all remaining parts, terms and provisions hereof shall remain in full force and effect and shall in no way be invalidated, impaired or affected thereby.

XXI. DELAYS AND FORCES OF NATURE:

21.1 Except as otherwise set forth in this Contract, the VENDOR specifically waives any right to seek any monetary damages or losses for a delay in completion of the Services or the termination of Services, including, but not limited to, waiving any right to seek monetary amounts for lost profits, additional overhead, salaries, lost productivity, efficiency losses, or any other alleged monetary losses which may be allegedly suffered by VENDOR due to a delay in the completion of the Services or a termination of Services.

21.2 The VILLAGE shall not be considered in default in the performance of its obligations hereunder or any of them, if such obligations were prevented or delayed by any cause, existing or future beyond the reasonable control of the VILLAGE which include but are not limited to acts of God, labor disputes or civil unrest.

XXII. COUNTERPARTS: This Contract may be executed in counterparts, each of which shall be an original, but all of which shall constitute one and the same document. Each of the parties shall sign a sufficient number of counterparts, so that each party will receive a fully executed original of this Contract.

XXIII. LIMITATIONS OF LIABILITY: Under no circumstances shall either party be liable to the other for any consequential, incidental, special, punitive, or any other form of indirect or non-compensatory damages.

XXIV. PUBLIC ENTITY CRIMES: VENDOR acknowledges and agrees that a person or affiliate who has been placed on the convicted vendor list following a conviction for a

public entity crime may not submit a bid, proposal, or reply on a contract to provide any goods or services to a public entity; may not submit a bid, proposal, or reply on a contract with a public entity for the construction or repair of a public building or public work; may not submit bids, proposals, or replies on leases of real property to a public entity; may not be awarded or perform work as a Vendor, supplier or sub-Vendor under a contract with any public entity; and may not transact business with any public entity in excess of the threshold amount provided in Section 287.017, Florida Statues, for CATEGORY TWO for a period of 36 months following the date of being placed on the convicted vendor list. VENDOR will advise the VILLAGE immediately if it becomes aware of any violation of this statute.

XXV. PREPARATION: This Contract shall not be construed more strongly against either party regardless of who was more responsible for its preparation.

XXVI. PALM BEACH COUNTY IG: In accordance with Palm Beach County ordinance number 2011-009, the VENDOR acknowledges that this Contract may be subject to investigation and/or audit by the Palm Beach County Inspector General. The VENDOR has reviewed Palm Beach County ordinance number 2011-009 and is aware of its rights and/or obligations under such ordinance.

XXVII. ENFORCEMENT COSTS: All parties shall be responsible for their own attorneys' fees, court costs and expenses if any legal action or other proceeding is brought for any dispute, disagreement, or issue of construction or interpretation arising hereunder whether relating to the Contract's execution, validity, the obligations provided therein, or performance of this Contract, or because of an alleged breach, default or misrepresentation in connection with any provisions of this Contract.

XXVIII. SURVIVABILITY: Any provision of this Contract which is of a continuing nature or imposes an obligation which extends beyond the term of this Contract shall survive its expiration or earlier termination.

XXIX. PUBLIC RECORDS. The VENDOR shall comply with Florida's Public Records Laws, Chapter 119, Florida Statutes, and, if it is acting on behalf of the VILLAGE as provided under section 119.011(2), the VENDOR specifically agrees to:

(i) Keep and maintain public records required by the VILLAGE to perform the services under this Agreement.
(ii) Upon request from the VILLAGE's custodian of public records, provide the VILLAGE with a copy of the requested records or allow the records to be inspected or copied within a reasonable tie at a cost that does not exceed the cost provided in this Chapter 119, Florida Statutes, or as otherwise provided by law.
(iii) Ensure that said public records that are exempt or confidential and exempt from public records disclosure requirements are not disclosed except as authorized by law for the duration of the Agreement term and following completion of the Agreement, if the VENDOR does not transfer the records to the VILLAGE. (iv) Upon the

completion of the Agreement, transfer, at no cost, to the VILLAGE all public records in possession of the VENDOR or keep and maintain public records required by the VILLAGE to perform the services. If the VENDOR transfers all public records to the VILLAGE upon completion of the Agreement, the VENDOR shall destroy any duplicate public records that are exempt or confidential and exempt from public records disclosure requirements. If the VENDOR keeps and maintains public records upon completion of the Agreement, the VENDOR shall meet all applicable requirements for retaining public records. All records stored electronically must be provided to the VILLAGE, upon request from the VILLAGE's custodian of public records, in a format that is compatible with the information technology systems of the Village.

**IF THE VENDOR HAS QUESTIONS REGARDING THE APPLICATION OF CHAPTER 119, FLORIDA STATUTES, TO THE VENDOR'S DUTY TO PROVIDE PUBLIC RECORDS RELATING TO THIS CONTRACT, CONTACT THE CUSTODIAN OF PUBLIC RECORDS OR DESIGNEE AT 561-434-5084, kwynn@vpsfl.org, OR BY MAIL AT VILLAGE OF PALM SPRINGS, 226 CYPRESS LANE, PALM SPRINGS, FL 33461**.

## XXX. SCRUTINIZED COMPANIES

As provided in F.S. 287.135, by entering into any agreement with the Village, or performing any work in furtherance hereof, Vendor certifies that Vendor and Vendor's affiliates, suppliers, subVendors and consultants that will perform hereunder that at the time Vendor submits a bid or proposal for a contract or before Vendor enters into or renews a contract with an agency or local governmental entity for goods or services of $1 million or more, the company must certify that Vendor is not on the Scrutinized Companies with Activities in Sudan List or the Scrutinized Companies with Activities in the Iran Petroleum Energy Sector List and that it does not have business operations in Cuba or Syria. Also, at the time a Vendor submits a bid or proposal for a contract or before the Vendor enters into or renews a contract with an agency or local governmental entity for goods or services of any amount, Vendor must certify that it is not participating in a boycott of Israel. If the Village determines, using credible information available to the public, that a false certification has been submitted by Vendor, the Village's Agreement may be terminated and a civil penalty equal to the greater of $2 million or twice the amount of the Agreement shall be imposed, pursuant to Section 287.135, Florida Statutes.

## XXXI. E-VERIFY

Pursuant to Section 448.095(2), Florida Statutes, beginning on January 1, 2021, the VENDOR shall:

1. Register with and use the E-Verify system to verify the work authorization status of all newly hired employees and require all subcontractors (providing services or receiving funding under this Agreement) to register with and use the E-Verify system to verify the work authorization status of all the subcontractor's newly hired employees;
2. Secure an affidavit from all subcontractors (providing services or receiving funding under this Agreement) stating that the subcontractor does not employ, contract with, or subcontract with an "unauthorized alien" as defined in Section 448.095(1)(k), Florida Statutes;
3. Maintain copies of all affidavits for the duration of this Agreement and provide the same to the Owner upon request;
4. Comply fully, and ensure all of its subcontractors comply fully, with Section 448.095, Florida Statutes;
5. Be aware that a violation of Section 448.09, Florida Statutes (Unauthorized aliens; employment prohibited) shall be grounds for termination of this Agreement; and,
6. Be aware that if the VILLAGE terminates this Agreement under Section 448.095(2)(c), Florida Statutes, the VENDOR may not be awarded a contract for at least one (1) year after the date on which the Agreement is terminated and will be liable for any additional costs incurred by the VILLAGE as a result of the termination of the Agreement.

IN WITNESS WHEREOF the parties hereto have made and executed this Agreement on the day and year first above written.

**VILLAGE OF PALM SPRINGS, FLORIDA**

By: _____
Beverly Smith, Mayor

ATTEST

_____
Kimberly Wynn, Village Clerk

Approved as to form and legal sufficiency:

_____
Glen J. Torcivia, Village Attorney

VENDOR: **EXPOSHOWS, INC.**

By: _____

[Corporate Seal] Print Name: David MacCormick

Title: VP Sales

STATE OF FLORIDA )
COUNTY OF LOS ANGELES )

Sworn to (or affirmed) and subscribed before me by means of [X] physical presence or [ ] online notarization, this CONTRACT this 26th day of April, 2021, by _____.

_____
(Signature of Notary Public-State of Florida)

Jody Landers
(Print, type, or stamp commissioned name of Notary public)

JODY CLAIRE LANDERS
Notary Public - California
Los Angeles County
Commission # 2227530
My Comm. Expires Jan 31, 2022

Personally Known ____ OR Produced Identification ✓
Type of Identification Produced: Florida Driver License [redacted]

Exposhows Inc.
5 March 2021

# Quote # SE FW2

## Village of Palm Springs, Florida
## 2021 Independence Fireworks Display
## Sunday, July 4th  Village Center

Index / Table of Contents

**Letter of Interest**.....**3**
**Experience and Ability**.....**4-9**
Company Profile.....4
Statement of Qualifications.....5
Project Management Team and Safety Record.....6-7
Industry Leading Best Practices.....8
Environmental Responsibilities.....8
Project Management Methodology.....9
**Technical Proposal**.....**10-16**
Project Summary.....10
Scope of Work.....11-15
Risk Management, Storage and Transportation.....16
**Display Elements / Shell Count Details / Pricing**.....**17-19**
Firing Site Plot Map / Configuration.....18
List of Effect Descriptions.....19
**References**.....**20-21**
**Other Disclosures**.....**22-26**

**Exposhows Inc.**

2455 190th Street
Suite G Redondo Beach, CA 90278
Tel (424) 322-8747 Fax (310) 451-7994

8 March, 2021

The Village of Palm Springs, Florida
2021 July 4th Fireworks Vendor Evaluation Committee
226 Cypress Lane
Palm Springs, FL 33461

Dear Evaluation and Selection Committee,

Greetings! We are excited about the opportunity to be selected as the vendor to operate the 2021 Village of Palm Springs July 4th Fireworks Display. A safe, best ever action-packed show is as important to us as it is to the Village and the community.

All elements of the bid requirements have been reviewed and understood. Exposhows is willing to enter into an agreement under the terms and conditions prescribed by The Village of Palm Springs.

Exposhows is a professional fireworks display company well seasoned in operating public displays. Staffed by veteran professionals with decades of aerial display experience, past events include hundreds of large municipal public displays. No incidents involving any injury or death, property damage or safety violations have ever occurred with our company. Safety remains our number one non-negotiable priority.

Exposhows puts more breaking aerial shells and effects in the air than competitors with breathtaking choreography and precision. For the Village display, over 1,100 breaking aerial shells. A lights-out two minute 400 shell plus finale follows an 18 minute main display that lifts 37 shells per minute.

Project management and team credentials and experience are detailed in our Written Bid response. Our Statement of Qualifications and endorsements reinforce why Exposhows is the best match to bring the safest, biggest, most exciting show ever to the Village. Our value-added services ensure your expectations will be exceeded. Thank you for your consideration.

Sincerely,

David MacCormick CMP
VP Sales
Exposhows Inc.

# Company Profile

Exposhows is a professional public fireworks display company, established in 2009 by pyrotechnic professionals to provide city and municipal agences a company specializing in outdoor aerial firework shows for the general public. Our staff has been involved in the production and operation of large outdoor public displays for State, County and City government, theme parks, and stadium operators for thirty years. Our expertise and experience in public firework displays is unmatched.

Explosives and Equipment Storage facilities are located in Jupiter, FL, Mojave and Santa Clarita, CA. In 2016, Exposhows expanded to operate multistate public display productions. Acquisition of a industry competitor in 2019 allowed for a increase in market share on a regional and local level including Florida. We are under contract with several municipal agencies including Cities of Orlando and Tavares in Lake County, FL

Our Admin HQ is in Redondo Beach,CA with an operations base in Stuart, FL All Storage sites are registered and inspected by the BATFE and County Fire Marshal(s). Company personnel and show staffing includes over 25 licensed operators and over 80 qualified and experienced public display pyrotechnicians.

Our public display experience and similar engagements for municipal agencies runs deep, including over 60 public displays with mostly multiyear sponsors in the last 3 years. Recently, in Florida, displays for The Village of Palm Springs and City of Tavares in 2020. All but two of our 34 scheduled July 4 displays last year cancelled due to COVID.

Exposhows is a Federally licensed Explosives licensee authorized to store, transport and use display fireworks by the ATF. As a Hazardous Materials Shipper with USDOT Interstate operating authority, Exposhows is permitted to transport Explosives and Hazardous Materials on public roadways throughout the United States.

Exposhows has never been disqualified from a project and has never been a party to any litigation arising from one of our displays. No incidents involving any injury to any spectators or property damage has ever occurred with Exposhows or with any of our experienced operators and team members.

Safety is always the first priority and non-negotiable with any public event. Spectator audience and staff member safety will never be compromised under any circumstances. Our general liability, workers comp and transportation insurance loss runs have no losses since inception.

Close coordination with Event Staff and municipal public safety departments with clear timely communication are hallmarks that distinguish Exposhows; a detail-oriented display company with logistical expertise and demonstrated leadership qualities that result in production excellence.

# Statement of Qualifications

Exposhows incorporated in 2011. Our staff operates outdoor public firework displays,our core business in regional markets. Sponsors and locations of current shows include the States of Florida, California and Montana. Most sponsors are multiple year clients and with a local presence, our local facilities are based in Palm Beach County. FL

Past event and venue highlights of our current and former operating staff include experience with all types of public displays. Landside and marine shows, stadium and arena fireworks, exhibitions, Olympics, MLB, Times Square New Year's Eve, performing artists, arena shows and more. The 2016 Grand Display at the Western Pyrotechnic Association Conference, as well as US Navy Fleet Week from 2016 to present.

Use of digital electronic firing systems and fireworks display software enables Exposhows to do things others cannot. The ability to use the entire sky with a smaller firing field footprint allows pinpoint placement of breaking shells in the sky. Better spectator optics and less restrictive artistic expression, unbound from constraints of analog firing systems.

Experience with production companies have been an additional avenue of growth. With over a decade of proximate, theatrical and special effects displays for theme parks and motion picture studios, Exposhows has integrated that technical pyrotechnic expertise intro our public displays, increasing our diverse skill set. As such, the most qualified candidate to operate your July 4th Fireworks Show.

Exposhows has expanded rapidly in the market to operate hundreds of public display firework shows in the past ten years. As you are well aware, recent events led to a horror show for public event related programs and industries. Most of our recent large scale shows were cancelled. (2020)

Our commitment to using only the highest quality fireworks and newest product available is part of our Best Practices. Exposhows works directly with different US manufacturers of pyrotechnic product. Our shell cost is higher but allows us to select the newest and best product from different sources for your show. If we find a way to add more as a value-added feature, we will make sure to do so to ensure that your expectations are exceeded.

As Exposhows gains more traction in Florida, we are confident our increasing market share here will cement our place as a local resource. Active membership in FPAG, the Florida Pyrotechnic Arts Guild has enabled Exposhows to utilize industry veterans, satisfying our increasing staffing needs to accomodate our growth.

## Key Contacts and Company Profile


Exposhows Mailing Address: PO Box 5590, Santa Monica CA 90409

Corporate Offices: 2455 190th Street Redondo Beach CA 90278
Florida Facilities: 17698 Beeline Highway Jupiter, FL 33478
California Facilities: 12701 United Street Mojave, CA 93501
Tel (424) 322-8747 Fax (310) 451-7994 www.exposhows.net
US DOT # 2053003 BATFE FEL#9-CA-037-51-6L-01569 Exp 11/22
Florida Business Entity Tax Registration # F0000005257
Tax ID: 80-0764509 DUNS 071103110 CA Corp: C3397606 Est: 2009

| | | | |
|---|---|---|---|
| *David MacCormick | Sales & Logistics | 239-472-0105 | dm@exposhows.net |
| *Paul Newland | Operations | 661-713-6140 | paul@exposhows.net |
| *Larry Ochner | Training & Hazmat | 661-202-9120 | larsox@exposhows.net |
| *Franklin Ponce | IT Systems | 661-542-1985 | frank@exposhows.net |
| *Dan Douglass | Facilities/Storage | 818-219-0376 | dan@exposhows.net |
| *David LaVoie | Fire Control Systems | 603-731-7935 | |
| Richard Morrison | Audio Engineering | 661-713-1852 | |


**Key Contacts are State Licensed and Federally cleared Pyrotechnic Operators*

The 2021 Village of Palm Springs July 4th Fireworks Display will be produced by our project management team. On-Site team will be headed by a licensed pyrotechnic operator and a minimum of three additional qualified pyrotechnic team members experienced with all facets of public display firework operations.

Exposhows personnel assigned to set up, operate the Display consists of only experienced staff members and licensed operator(s) for each display. All aspects of the Fireworks Display are conducted by Exposhows staff and are never subcontracted to another agency or any third parties.

All assigned licensed display operators and pyrotechnicans have multiple outdoor show display experience. Federal law requires that pyrotechnicians be US Citizens with no felony convictions. All Exposhows pyrotechnicians are BATFE Employee Possessors that have completed Federal Background Checks and have received Notices of Clearance from FELC/ DOJ.

All staff members are qualified and authorized to work as employee possessors under Exposhows Federal Explosives License as required by Federal Law. With over 80 qualified pyrotechnicians and 25 licensed operators, all staff have multi-show outdoor experience and receive mandatory annual safety and pyrotechnic training.

## Safety and Staff Training

Exposhows Inc, is dedicated to safe practices and the advancement of best practices in the fireworks industry. Author of several reports and publications that address best practices with respect to Fireworks Safety, Discharge of Fireworks and Environmental Impact Reports, Exposhows continues to lead the way to make the industry safer and reduce the ecological impact of aerial display fireworks.

Primary focus at Exposhows is always the safety of audience and staff members and will never be compromised under any circumstances. No incidents involving any injury or death to any spectators have ever occured with an Exposhows production or our experienced operators and team members. No incidents involving any property damage or resulting in an emergency response have every occured at any of our shows.

Exposhows equipment exceeds the highest standards of construction and materials. Only HDPE or steel are used for mortar fabrication, no fiberglass or materials that present a possibility of fragmentation. Mortar rack construction exceeds minimum specifications set forth by regulatory agencies. Equipment is inspected before every show to ensure integrity of mortar racks, solid wood mortar base plugs and mortar walls.

Firing site equipment configuration is designed to eliminate any loss of mortar or rack framing integrity in the event of a in-gun detonation or catastrophic event, ensuring safety or audience, staff or any person(s) proximate to the launch site. Always observing safe distances are another key cornerstone to our best practices.

Pre Display Site safety briefings for the on-site team are conducted daily prior to work and again prior to the start of the display

Only trained and experienced pyrotechnicians are assigned to Exposhows Fireworks Displays. All our licensed operators and pyrotechnicians receive mandatory annual explosives and fireworks safety training. Course materials include OSHA High Hazard Injury & Illness training, First Aid and instruction on Industry Safety Protocols

## Sponsor Duties

Any professional grade sound system including all necessary equipment, installation of such equipment and trained audio engineers for operation of audio and communication is provided by the sponsor or designated media partner.

Placement of a dumpster for cardboard, debris and non hazardous waste is requested. Proximate open restrooms or portable station for pyrotechnic team comfort is requested.

Provision of a fallout safety zone, in accordance with applicable standards and meeting all requirements of Palm Beach County Fire Dept and NFPA minimum standards throughout the entire time that explosives (show truck) arrives on site on the date of the production until departure following strike and load out of the production.

Any on site labor cost, if any, not provided or performed by Expo personnel, including but not limited to, local union requirements, all proximate security, Police and Fire Dept standby personnel, stagehands, electricians, audio and fire control monitors, carpenters and plumbers

Coordination and cost of any non-pyrotechnical permitting with the local, state or federal government that may hold authority within the production

## Industry Leading Best Practices

Safety is always the first priority and non-negotiable with any public event. Our Safety Compliance operates within the scope of Fireworks Best Practices, always maintaining safe distances, using the best equipment, trained staff and vigilant in observing safe pyrotechnic operating protocols and methodology.

Advances in digital, wireless fire control systems and an increase in equipment construction minimum standards have made the pyrotechnic display industry safer for pyrotechnicians and audience members over the past two decades.

Contingency planning is always a hallmark of successful project management. Failure to plan can result in a display cancellation and compromise safety. Exposhows plans for occurences such as inclement weather with standby polyethylene protection for loaded fireworks batteries in the event of a cloudburst or precipition. Protection of electronic firing system components in hardened plastic weaterproof cases. Use of 6mm Visqueen allows the display to be fired even during rainstorms or conditions of high humidity.

The condensed footprint of our firing site configuration allows for additional coverings to be deployed over the entire display that allows staff the ability to continue wiring the display under cover during any constant prolonged downpour of rain.

Exposhows maintains a Best Practices Blueprint that can be forwared to the Evaluation Committee for review on request. It is several pages and beyond the scope of this RFP with regard to content.

## Environmental Responsibilities

Aerial Fireworks used for the July 4th Display at the Village Center are comprised of biodegradable cardboard, craft paper, string, tape, glue, black powder, metal salts, (colorants) dextrin and rice. Debris is collected and disposed of in a responsible manner after the display prior to staff departure. Of primary environmental concern is copper electronic ignition wire. Used with every shell, it is secured to each mortar via strain relief. In this manner, e-match stays with the mortar upon launch of the shell to eliminate any environmental impact or discharge of coated copper wire into a marine o park environment. It's collected after the display, an keystone of our Best Practices.

Any proximate theatrical and stage fireworks used are low smoke, eco-friendly, self-consuming devices with no fallout and use cardboard, nitrocellulose and colorants. Our vendor, Ultratec is the world leader in ecofriendly proximate pyrotechnics supplying the Olympics and professional sport venues

## MSDS

MSDS are required by DOT in accordance with regulations governing Hazardous Materials Transportation on public roadways in the United States. MSDS for all fireworks that will be on-site are included in the transportation permit package.

## IMPLEMENTATION

Successful delivery of an exceptional public display fireworks production requires a structured approach within a clearly defined framework. The project manager and team must utilize every tool and resource to optimize the outcome. The process is built on experience and extensively documented success. It ensures all specific criteria that define the scope and success of the project are met

## PROGRAM CONTENT

We are only limited by the extent of our imagination. Proposed show design, program changes, music and display choreography are offered as a starting framework or endpoint. State, stakeholder, sponsor and public input is encouraged in the interest of achieving the same vision. Shared vision leads to a collaborative effort, the best change control option we have in any client vendor relationship.

## PROJECT MANAGEMENT STRATEGIES

Use only the very best, most reliable display fireworks available in the world. Fabricate the safest firing equipment possible for the viewing audience and employees. Always keep safety the primary non-negotiable priority. Hire responsible staff and trained, experienced industry veterans. Design the display with new effects and the widest variety and appropriate shell size selection. Design audio and show choreography that excites and engages the viewers and spectators and those who may view it remotely via different media sources.

## PROJECT RISK IDENTIFICATION

Identification as well as managing and mitigating the project risks that will occur are central to project success. Equipment, product, transportation, safety, security, logistics, staffing and weather are significant areas of anticipated risk. Contingencies, risk owners and assigned responsibilities are Risk Register items. e.g. (Two operators assigned to the display in the event a sole operator became unavailable due to unforeseen circumstances).

## PERFORMANCE

Coordination of people and activities, constant auditing and review are controls that keep Exposhows projects on-track, on-time and within budget. Timelines for completion risks coupled with project strategy have always led to successful product delivery.

Supplier performance measurement, ultimately project health and status are constantly monitored by using Earned Value metrics. Evaluating Trend analysis of Cost and Schedule Performance Index ratios enable dynamic adjustment and change well ahead of the event horizon.

# Technical Proposal

## Project Summary

The 2021 Village of Palm Springs July 4th Fireworks Display continues a tradition. The one day Independence Celebration is free and open to the public. The fireworks display is fired from a location in the center of the Village Center Athletic Complex.

Runtime of the fireworks program is 20 minutes and showtime is 9 p.m. The action packed display lifts 37 shells per minute of continuous firing with a 400 shell and more grand finale. Fallout and safety zone perimeter during setup and the display is a circular zone that extends in all directions from the launch site with a minimum 350 foot radius.

The fallout safety diameter zone of 800 exceeds minimum distances to safely accommodate maximum aerial breaking shell sizes of 5". The pyrotechnic production is choreographed and broadcast to synchronize to an approved digital audio track if desired.

The displays incorporate aerial single shot shells, specialty shells, chained aerial shells and when appropriate, multishot devices. Our effects library includes shells from the world's top manufacturers including T-Sky and Flower King in addition to US, Spanish, Japanese and Italian style aerial shells manufacturers, Exposhows uses only the best and newest product available from domestic sources and overseas.

Exposhows uses Pyromate and Cobra, state of the art digital, wireless firing systems to launch choreographed displays with precise pinpoint timing. Audio soundtracks, mastered specifically for the Village by our our multi-Emmy award winning Audio Engineer will be submitted to the event staff for review and approval prior to April. Following approval, digital distribution & coordination with the Village's media partner for the event.

All Federal, State and local licenses, permits and filings in accordance with all laws, regulations and requirements governing fireworks as well as Risk Management Certificates will be provided by Exposhows. All staff including the licensed Public Display operator in charge and on-site pyrotechnicians are experienced in public displays and authorized Federal BATFE Employee Possessors with current explosives safety training.

Equipment strike and clean up will be conducted following the conclusion of the event. A post show site inspection the following morning with a Village Parks & Recreation representative authorized to inspect and sign off on clean up and release vendor liability.

## Project Design and Scope of Work

The Annual Village of Palm Springs 4th of July Celebration Fireworks at Village Center is an audiovisual celebration of the history and freedom of America and contemporary Florida. It showcases the central location Village to world class recreation and beach destinations and the United States in form and function as universal symbols of connectivity, stability, growth and innovation. A celebration of Americas' diversity and a salute to local veterans.

The Fireworks Finale display brings the sky to life. It celebrates July 4th and our history from the beginning to the present representing the dynamic synergy of our United States, portrayed through a menagerie of light and music symbolizing ever greater reliance, sustainability and independence of America.

## Safety and Security Plan

All Exposhows employees undergo mandatory annual Safety seminar Certification and have recent show experience. All State licensed operator(s) and pyrotechnicians are registered Federal BATFE Employee Possessors and cleared by the DOJ to handle explosives. Additional training and compliance with OSHA High Hazard Employer Workplace Injury and Illness Prevention Plan is administered to all employees.

Daily safety meetings and pre load-in safety briefings are given on-site. All Exposhows HME (HazMat Endorsed) commercial drivers participate in DOT mandated random drug testing, ackground checks and clearance by the TSA. Drivers are carried as additional insured on Exposhows Commercial Transportation Liability policies.

Access to the firing site is restricted. Exposnows staff remains on site from load-in of explosives until all unfired explosives material is secured and show truck has left the show site following strike of the display.

Fireworks site access proper is restricted to pyrotechnic team members, Palm Beach County Fire Dept, VPSPD, Public Safety, any on-site security and Event staff. Any and all visitors must be cleared by Public Safety or Parks and Recreation. All visitors are escorted by licensed Operator. Licensed Operator has authority to permit access at their discretion.

## Permit, Sponsor and Public Safety Coordination

All permits filings and notifications required by Federal agencies, (FAA) and Palm Beach County Fire Dept. Office of the Fire Marshal in accordance with all U.S., State and local laws will be submitted by Exposhows after contract endorsement and approval. Village of Palm Springs, Palm Beach County Fire Rescue, its elected officials, officers, employees, volunteers, guests, agents and public safety agencies will be listed as additional insured on Exposhows general liability and Workers Comp policies.

## Music for Fireworks Show

If desired, Exposhows will submit a proposed audio track for review and approval by event staff. Approved audio track may be modified to include pre-show and/or post show narration at the direction of the event director. Following approval, coordination and digital distribution of the audio program to the Village media partner or simulcast with a local radio station will be completed.

## Pre-Event Meetings

Any pre-event firework meeting(s) or walk-through with the sponsor or public safety dept. will be attended by the the project manager or assigned licensed operator.

## Itemized List and Delivery of Display Equipment

Equipment will be delivered to the firing site on July 3rd. Equipment list includes HDPE 2" - 5" mortars and racks constructed in accordance with and exceeding minimum safe standards and approved rack stabilization methods.

Use of a digital firing system with built in safeguards consistent with safe operation and best practices. All applicable modules, cables, connectors related to the firing system. E-match, quick match and 22-2 low voltage zip wire used to connect fireworks to firing modules. Fire suppression equipment, foil, Visqueen (polyethylene plastic) and oversize tarps for display protection in the event of inclement weather conditions.

## Equipment Delivery / Explosives Load In

Fireworks will be delivered via secured Hazmat licensed the firing site at Village Center on Sunday, July 4th at 8 a.m. Hazmat Transportation Permit documents include travel route of the truck. Authority with Jurisdition; Palm Beach County Fire or VPSPD will be advised the ETA of truck and be on site to open Park gates when truck arrives on-site.

Product remains secured inside the truck until such a time licensed operator in charge determines safety perimeter is established and display is ready for product loading. Shell drop and loading follows a Preload Safety Briefing and any required inspection by PBCFD Inspector or Fire Safety Officer.

On completion of shell drop and wiring of all main display and finale chain shells at approximately 5 p.m., field modules will be connected and the field will be cleared by the Operator in Charge to prepare for system continuity checks. A loud verbal "Clear Field" announcement confirming a secure safety perimeter is made every time the firing panel is energized.

Continuity test(s) will be conducted until the display is at 100% Any Signal testing with sound booth or media partner with occur prior to the display. An additional final continuity test will be conducted prior to 8 p.m.

Entire duration of the display from the opening shot to the final finale cue will be fired electronically and choreographed to any pre-approved audio soundtrack.

## Display Description

Display contains a variety of several dozen different types of aerial breaking shell effects from different manufacturers fired from the launch site. The display opens with a variety of show effects in all colors visible to the human eye and includes front line single shell titanium salutes and color display and effect shells.

The main body display consists of single shot and multi shot aerial shells and effect shells. Shells may be fired in tandem to a faux finale, building again in intensity for a finale that will engage multiple chained shells and single shot support shells. A breakdown of shell effect types is detailed following Display Elements.

Sky pictures are used in main body, rapidly fired choreographed sequences that create visual panoramas that represent gold waterfalls with pink stars, sunset rainbows and provide an outstanding, multi-layered horizon to horizon experience.

## Display Operations

Entire duration of the display from the opening shot to the final finale cue will be fired electronically. Any preshow test shots will also be electronically fired.

Display operator and pyrotechnic team will be in protective gear prior to arming firing system for continuity test(s) and the display. Protective gear includes long 100% cotton long sleeve and long pants, hard hats, eye and ear protection. Sponsor and Fire Safety Officer will be advised when continuity testing is complete.

All event staff other than production pyrotechnicians and PBCFD Fire Safety Officer must be clear of designated safety perimeter 30 minutes before display start. After the safety perimeter is clear, an all-clear signal is given by Operator and on-site Fire Safety Officer to ensure safe distance minimums are being observed

Following a pre-show safety briefing, pytrotechnic staff with fire supression units are deployed to the fallout perimeter locations for the duration of the display.

Sponsor will be notified that firing system is armed and hot approximately 15 minutes before the scheduled start of the displays. Start of the display is ultimately under the control of the sound booth or media partner at the discretion of the sponsor.

All members of the public and event staff must be clear of the safety perimeter 30 minutes before display start. After the safety perimeter is clear of all persons, an all-clear is given. Firing system will be armed and hot approximately 15 minutes before the scheduled start of the display. Start of the display is ultimately under the control of the sound booth or media partner at the discretion of the licensed pyrotechnic operator in charge and Fire Safety Officer who makes final safety decisions.

Firing Systems in use by Exposhows contain a deadman switch that enables an immediate cease fire in the event an unsafe condition exists that may jepoardize public safety. No aerial shells are chained or ganged in the main display which prevents any additional breaking aerial shells from firing in the event of a cease fire. The display may then be resumed at the discretion of the Operator and the Fire Safety Officer.

## Post Display Safety

Due to heat generated by shell lifting chages, the firing field will not be approached for 30 minutes folllowing the conclusion of the show. It is not uncommon for unfired shells to launch following a display due to the intense heat following a finale barrage.

A post display proximate field sweep will be conducted immediately following the display during cool down. Team members will attempt to isolate and secure any duds or aerial shells that were observed to malfunction for containment.

If all shells are accounted for by spotters and burst counts match, an all clear within 10 minutes of the conclusion of the display is anticipated. Following the firing field cool down, all guns will be inspected for unfired shells by the licensed Operator in Charge and an assistant.

Any unexploded ordinance will be removed, secured and stored in the show truck in a safe manner before any equipment or site tear down is initiated. Removal of all explosives from the site will be conducted after equipment strike and during load out.

A detailed Post Display Report will be provided to the Palm Beach County Fire Marshals Office within 72 hours of the conclusion of the show.

## Display Equipment Strike, Clean Up

Equipment Strike removes all guns, racks and associated firing equipment from the site. Display debris and expendables will be disposed in a manner consistent with best practices.

Substrates and surfaces used to stage all equipment and pyrotechnics will be returned to their original condition following completion of the display. All debris and byproduct materials will be removed and discarded in a manner consistent with responsible project management. Weather or unforeseen conditions withstanding, Exposhows will supply all materials and staff necessary to complete load-out and cleanup in accordance with required completion dates.

A Parks or Village representative will be required to make a final walk through inspection with the lead operator to ensure compliance with contract terms and to certify any used substrate has been returned to its original condition without damage.

## Hazardous Materials Transportation

Exposhows is a Federally licensed Hazardous Materials Shipper and has Interstate operating authority to transport Explosives and Hazardous Materials on public roadways throughout the United States.

Exposhows USDOT #2053003 maintains all current required permits that include FMCSA Hazardous Materials Interstate Transportation Permit, FMCSA Satisfactory Rating & PHMSA Registration. Exposhows carries a $5,000,000 Commercial Transportation Policy, required by law to conduct Interstate Transport of Hazardous Materials.

Transportation of Hazardous Materials (Explosives and Fireworks) are done in house by Exposhows employees who are also licensed operator(s) for the 2021 Sugden Park July 4th Fireworks Display. As Commercial Drivers with HazMat endorsements, they are subject to the requirements and regulations of 49 CFR that include random drug testing, physicals and DHS background checks.

## Explosives Storage

In accordance with BATFE 27 CFR and DOT 49 CFR regulations that govern Explosives transport and storage, no overnight explosives storage is required and on-site explosives will be attended at all times by Exposhows staff.

## Acceptance of Terms and Conditions & Cancellation Policy

No Exceptions to the Scope of Work or terms and conditions is taken.

Any costs or permit filings with regard to maintenance of traffic or vehicle traffic control fall outside the scope of work of Exposhows (vendor) responsibilities.

Exposhows is willing to enter into an agreement under the terms and conditions prescribed by The Village of Palm Springs. It is our intention to streamline the production process by utilizing feedback to shape the show with the synergy of a shared vision.

Village shall have the option to unilaterally cancel the Production prior to the scheduled date without rescheduling. If Village of Palm Springs exercises this option, Village agrees to pay to EXPO, as liquidated damages, 25% if cancellation occurs 15 to 29 days prior to the scheduled date, 2) 50% if cancellation occurs 7 to 14 days prior to the scheduled date, 3) 75% if less than 7 days and 4) After July 1st, 100% thereafter.
If the event is rescheduled less than 7 days from the show date due to a Force Majure (including pandemics), Village agrees to pay to EXPO a 15% percentage of the fee or 25% of the fee if on-site show setup has been initiated.
In the event Village cancels the Production, it will be impractical or extremely difficult to fix actual amount of EXPO's damages. The foregoing represents a reasonable estimate of the damages EXPO will suffer if Village cancels the Production.

## Display Elements and Shell Count

Shell count and device totals are listed and will be sent with permit filings for review and approval by Palm Beach County Fire Dept. Office of the Fire Marshal.

Specialty custom shells used to enhance the audience experience are made in the United States. Exposhows is proud to support American manufacturers whenever possible.

| Shell Size /Effect / Device | Aerial Shell Count |
|---|---|
| **Aerial Barrage Opening** | |
| Multishot Devices (2 x 49 shot) | |
| 3" Display Shells | **10** |
| 4" Display Shells | **2** |
| **Aerial Main Display** | |
| Mulltishot Devices (2 x 300 shot) | |
| 2.5" Main Display Shells | **124** |
| 3" Main Display Shells | **410** |
| 4" Main Display Shells | **100** |
| 5" Main Display Shells | **36** |
| **Aerial Grand Finale** | |
| 2" Shell Finale Cake (1) | **100** |
| 2.5" Shells (Chain Finale) | **120** |
| 3" Shells (Chain Finale) | **180** |
| 4" Shells (Chain Finale) | **18** |
| 5" Display Support Shells | **4** |
| **Total Shell Count / Run Time / Price** | **Summary Total** |
| Breaking Shell Total | **1104** |
| Main Display Shells (Lift Rate Average) | **37/ minute** |
| Finale Run Time | **2 minutes** |
| Total Show Run Time | **20 minutes** |
| Total Display Price | **$21,800*** |

As an operating standard and value-added feature, Exposhows displays and permit filings have additional product above the listed total count to exceed expectations and ensure compliance with contracted minimum shell count. *Pricing includes all PBC Fire Dept Permit Filings and all Fees.

55.2
201 1104

# Plot Map / Firing Site Location

226 Cypress Lane, Village of Palm Springs FL 33461

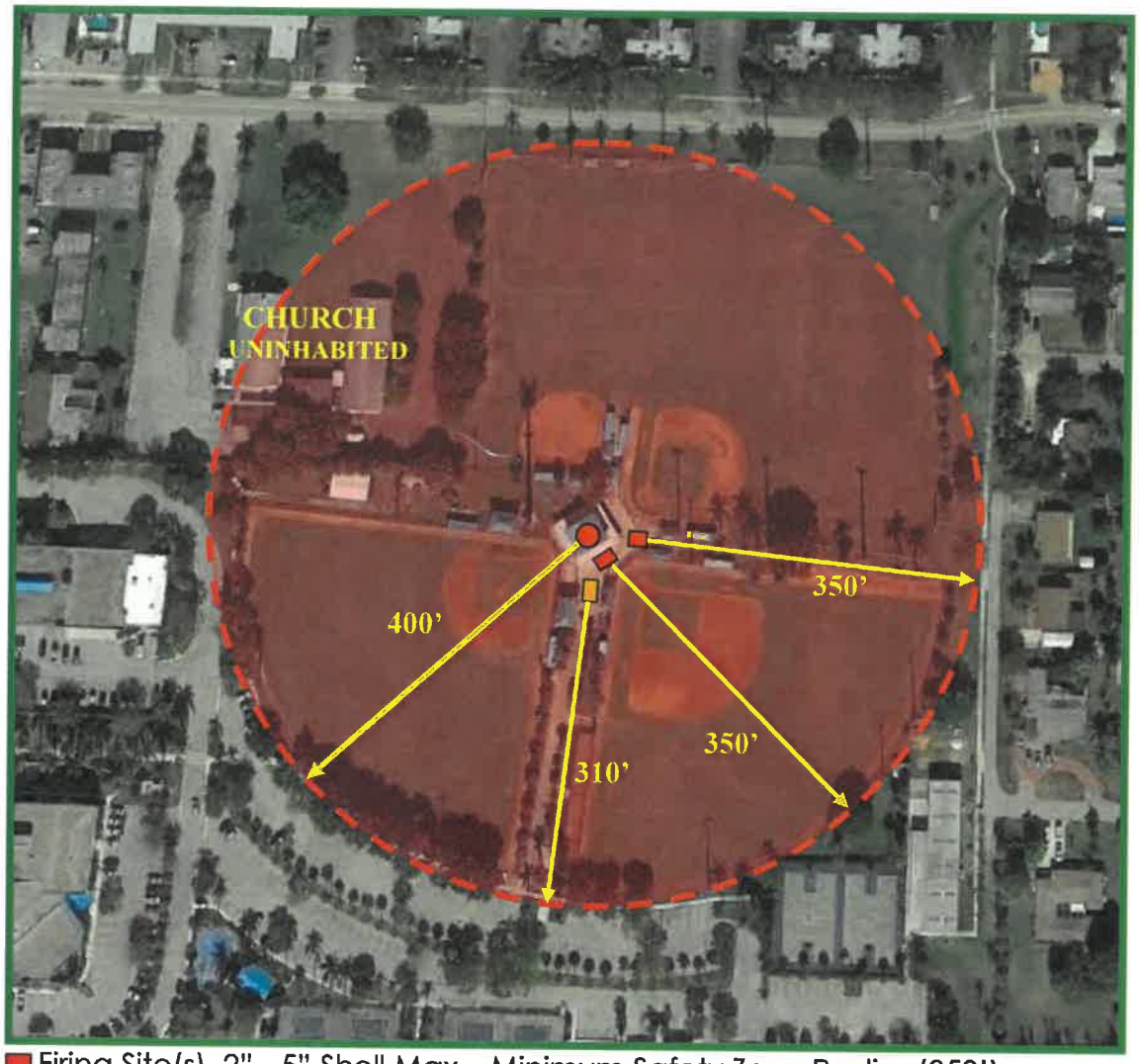


Firing Site(s) 2"- 5" Shell Max – Minimum Safety Zone Radius (350')
Firing Site 2" - 4" Shell Max – Minimum Safety Zone Radius (280')
Coordinates 26° 38' 31.09" North Latitude 80° 05' 35.19" West Longitude

## 2021 Village of Palm Springs July 4th Fireworks Displays – Effect Inventory

**Most Effect Categories below contain dozens of different effects with similar performance characteristics in different colors. Standard and custom special effects within a category have been detailed for reference. Each effect in a category is further defined by color or color(s)**

**Exposhows uses a balance of shells in all categories and all colors of the visible light spectrum for a specific Display Mix. Various Reds, Orange, Yellows, Greens, Blues, Indigo, Violet, Lime, Lemon, Aqua, Pink, Whites, Silvers and Golds are all employed for every show. All shells have rising tails in different colors to facilitate visual shell tracking by the spectators.**

### Effect Categories (Main Display and Finale Support Shells)

3" - 6" Floral Pattern Shells Peony/Gamboge/Cyas / Dahlia / Diadem / Chrysanthenum
3" - 6" Specialty Floral Pattern Effects with 2 Color Changing Pistil Core Effect Shells
3" - 6" Duration/Lingering Effects Strobes/Willow/Stars/Falling Leaves/Spiders
3" - 6" Multi-Break / Multi Break Dragons Egg / 1000 Flowers Color Effect Shells
3" - 6" Scattering Bees / Flying Dragon /Crossette / Shooting stars /Spining Flowers
3" - 6" Pattern Shells Hearts/ Saturn/ Happy Face/ Ring / Bowtie /Multi Rings
3" - 6" Specialty Effects 3 Color Changing with Palm or Strobe Core Effect Shells
3" - 6" Palm, Dahlia, Diadem & Color Changing Chrysanthemum Multi-Effect Shells
3" - 6" Single, Two & Three Color Waves. Color Changing Waves w/ Brocade Crown
3" - 6" Brocade Crown. Coconut, Cascade, Crown & Willow Shell Effects
3" - 6" Kamuro / Super Brocade / Gamboge Effect Shells
6" Super Pattern Stained Glass / Kaleidoscope / Rainbow Effects
6" Super Custom Octopus / Jellyfish /Ghost Effect Shells
3" Super Crackling / Whistles / Super Peony Titanium Salute Report Shells
4" - 6" Lampare, Dragons Eggs / Fish & Serpent Effect Shells
5" - 6" New Pattern Cat Face /Alien / Snail / Windmill / Stars in Stars / Jupiter
5" - 6" Falling Duration Lantern / Windbell / Waterfall / Horse Tail Effect Shells
3" - 6" Comet / Tiger Tail / Palm Tree / Coconut Tree Shell Effects
3" - 6" Sicilian Sky Picure Panorama Gold Waterfall with Pink Stars (40 Shell Effect)

### Finale Chains

3"-6" Finale Chain Red, White & Blue Color Display Shells
3"-4" Finale Chain Color Shells with Titanium Salutes
3"-6" Finale Chain Gold Brocade
3"-6" Finale Chain Gold Kamuro
3"-6" Finale Chain Niagara Falls with Blue Pistil
3"-4" Finale Chain Multi Color Peony with Report
3" Finale Chain Titanium Salute

## References

Village of Palm Springs, FL- Parks & Rec Supervisor Leanna Collazo (561) 964-8820
City of Tavares, FL- Community Services Director Scott Aldrich (352) 782-6338
Village of Palm Springs - Assistant Police Chief Robert Perez (561) 304-4860
City of Redondo Beach - Community Services Director John LaRock (310) 618-2937
City of Beverly Hills - Special Events Director Magdalena Davis 1310) 285-1098
City of Tavares Fire Dept - Captain Buddy Luckock (352) 516-4876
Pacific Palisades - Bel Air Bay Club - Director Bill Howard (310) 339-9294
Malibu Colony Fireworks - Malibu Colony Association (contact info avail on request)
LA County Dept. of Beaches & Harbors Marina del Rey- Catrina Love (424) 526-7874
City of Lynwood Recreation Services Director- Rozie Carrillo (310)603-0220 x-225
City of Fillmore - Fire Chief Keith Gurrola (805)524-1500
US Navy Los Angeles Fleet Week Battleship USS Iowa Jonathan Williams (877) 446-9261
City of Avalon, Catalina Island - Community Services Director Dan Hunke (31 O) 701-4153
Six Flags Magic Mountain - Entertainment Director Pam Bugbee I661) 255-4810
Two Harbors, Catalina Island - Sales Director Leslie Boutilllier 1310) 510-4249
Santa Monica Beach Club - Event Director Jeannie Mai 1310) 395-3254
LA City Fire Dept. Public Assemblage Unit - Inspector John Williams (213) 978-3650
Riverside County Fire Marshal - Deputy Marshal Sonia Cooley (760) 863-8886
Palm Beach County Fire Rescue. - Captain Kathi Greenia 1561) 616-7000
Orange County Fire Authority - Fire Inspector Darren Johnson (714) 402-3103
State of Montana - Deputy State Fire Marshal Sally McKenna (406) 896-4388
Truckee Fire Protection District - Fire Marshal Kevin McKechnie (530) 582-7855
City of Santa Clarita Arts & Events - Joel Beck (661) 250-3720
City of Alhambra Community Services - Vincent Hon (626) 570-5089
Los Angeles County Fire Dept- Fire Inspector Gary Black (310) 510-0424
City of Murrieta Recreation Services Event Director- Laura Frasso (951)461-6110
City of Downey Fire Inspector Lee Kirby (562) 904-7348
Crazy Mountain Ranch, Montana KMG Irongate Jon Delaurier (406) 686-9099
City of Newport Beach Fire Department- Fire Inspector Steve Michael (949)644-3110

## Selected Reference Details

Company Name: **Village of Palm Springs**
Address: 226 Cypress Lane, Palm Springs, FL 33461
Contact Person: **Leanna Collazo** - Parks & Recreation
Business Phone: **561-964-8820** E-Mail: **LCollazo@vpsfl.org**
Project Cost: Aerial Display **$23,000** Project Start/Completion Date: **Jul 3-5, 2020**
Description of project or work completed: **July 4th public Aerial Display Fireworks Choreographed to music. Radio Simulcast. 21 Minutes 1000 shells. 2.5" – 5" shells.**

---

Company Name: **City of Redondo Beach**
Address: 415 Diamond Street, Redondo Beach CA 90277
Contact Person: **John LaRock** – Director Community Services
Business Phone:**310-618-2937** E-Mail: **john.larock@rtorranceca.org**
Project Cost: Multiple Displays **$350,000** Start/Completion Date: **2009-Current**
Description of project or work completed: **Large public Aerial Display Fireworks Outdoor Show. Choreographed to music. 21 Minutes 1180 shells. 3" – 8" shells. 2019 Contract $75,000 20,000+ Spectators** (2020 was COVI D cancelled)
*John just took a position in the same capacity in Dec 2020 with the neighboring city of Torrance*

---

.Company Name: **City of Tavares, Florida**
Address: 201 E. Main Street Tavares FL 32778
Contact Person: **Scott Aldrich –** Community Services Director
Business Phone: **352-516-4202** E-Mail: **saldrich@tavares.org**
Project Cost: Annual Displays **$35,000 Annual** Start/Completion Date: **2020-2024**
Description of project or work completed: **Public Aerial Display Fireworks Choreographed to music. 21 Minutes 1100 shells & 6 Minutes (460 Shells) 3"– 6"shells.**

---

Company Name: **County of Los Angeles Beaches & Harbors Dept.**
Address: 4701 Admiralty Way, Marina del Rey, CA 90272
Contact Person: **Catrina Love** – Senior Analyst
Business Phone: **424-526-7874** E-Mail: **Clove@bh.lacounty.gov**
Project Cost: Multiple Displays **$220,000** Start/Completion Date: **2015-2019**
Description of project or work completed: **Large Public Aerial Display Fireworks Choreographed to music. 21 Minutes 1100 shells. 3"– 6"shells. 30,000+ Spectators**

---

# Statement of Non-Discrimination

Exposhows Inc. is an equal opportunity employer and does not discriminate in employment on the basis of race, color, religion, sex (including pregnancy and gender identity), national origin, political affiliation, sexual orientation, marital status, disability, genetic information, age, membership in an employee organization, retaliation, parental status, military service, or other non-merit factor."

Form **W-9**
(Rev. December 2011)
Department of the Treasury
Internal Revenue Service

# Request for Taxpayer Identification Number and Certification

**Give Form to the requester. Do not send to the IRS.**

Print or type
See Specific Instructions on page 2.

Name (as shown on your income tax return)
**Exposhows Inc.**

Business name/disregarded entity name, if different from above

Check appropriate box for federal tax classification:
☐ Individual/sole proprietor ☐ C Corporation ☑ S Corporation ☐ Partnership ☐ Trust/estate

☐ Limited liability company. Enter the tax classification (C=C corporation, S=S corporation, P=partnership) ▶

☐ Exempt payee

☐ Other (see instructions) ▶

**PO Box 5590**

**Santa Monica CA 90409**

Requester's name and address (optional)
**Village of Palm Springs**
**226 Cypress Lane**
**Palm Springs, FL 33461**

List account number(s) here (optional)

## Part I Taxpayer Identification Number (TIN)

Enter your TIN in the appropriate box. The TIN provided must match the name given on the "Name" line to avoid backup withholding. For individuals, this is your social security number (SSN). However, for a resident alien, sole proprietor, or disregarded entity, see the Part I instructions on page 3. For other entities, it is your employer identification number (EIN). If you do not have a number, see *How to get a TIN* on page 3.

**Note.** If the account is in more than one name, see the chart on page 4 for guidelines on whose number to enter.

**Social security number**
| | | | - | | - | | | | |
|---|---|---|---|---|---|---|---|---|---|
| | | | | | | | | | |

**Employer identification number**
| 8 | 0 | - | 0 | 7 | 6 | 4 | 5 | 0 | 9 |
|---|---|---|---|---|---|---|---|---|---|

## Part II Certification

Under penalties of perjury, I certify that:

1. The number shown on this form is my correct taxpayer identification number (or I am waiting for a number to be issued to me), and
2. I am not subject to backup withholding because: (a) I am exempt from backup withholding, or (b) I have not been notified by the Internal Revenue Service (IRS) that I am subject to backup withholding as a result of a failure to report all interest or dividends, or (c) the IRS has notified me that I am no longer subject to backup withholding, and
3. I am a U.S. citizen or other U.S. person (defined below).

**Certification instructions.** You must cross out item 2 above if you have been notified by the IRS that you are currently subject to backup withholding because you have failed to report all interest and dividends on your tax return. For real estate transactions, item 2 does not apply. For mortgage interest paid, acquisition or abandonment of secured property, cancellation of debt, contributions to an individual retirement arrangement (IRA), and generally, payments other than interest and dividends, you are not required to sign the certification, but you must provide your correct TIN. See the instructions on page 4.

**Sign Here** | **Signature of U.S. person** ▶  **Date** ▶ 6/14/2020

## General Instructions

Section references are to the Internal Revenue Code unless otherwise noted.

## Purpose of Form

A person who is required to file an information return with the IRS must obtain your correct taxpayer identification number (TIN) to report, for example, income paid to you, real estate transactions, mortgage interest you paid, acquisition or abandonment of secured property, cancellation of debt, or contributions you made to an IRA.

Use Form W-9 only if you are a U.S. person (including a resident alien), to provide your correct TIN to the person requesting it (the requester) and, when applicable, to:

1. Certify that the TIN you are giving is correct (or you are waiting for a number to be issued),
2. Certify that you are not subject to backup withholding, or
3. Claim exemption from backup withholding if you are a U.S. exempt payee. If applicable, you are also certifying that as a U.S. person, your allocable share of any partnership income from a U.S. trade or business is not subject to the withholding tax on foreign partners' share of effectively connected income.

**Note.** If a requester gives you a form other than Form W-9 to request your TIN, you must use the requester's form if it is substantially similar to this Form W-9.

**Definition of a U.S. person.** For federal tax purposes, you are considered a U.S. person if you are:

- An individual who is a U.S. citizen or U.S. resident alien,
- A partnership, corporation, company, or association created or organized in the United States or under the laws of the United States,
- An estate (other than a foreign estate), or
- A domestic trust (as defined in Regulations section 301.7701-7).

**Special rules for partnerships.** Partnerships that conduct a trade or business in the United States are generally required to pay a withholding tax on any foreign partners' share of income from such business. Further, in certain cases where a Form W-9 has not been received, a partnership is required to presume that a partner is a foreign person, and pay the withholding tax. Therefore, if you are a U.S. person that is a partner in a partnership conducting a trade or business in the United States, provide Form W-9 to the partnership to establish your U.S. status and avoid withholding on your share of partnership income.






# Detail by Entity Name

Foreign Profit Corporation
EXPOSHOWS INC.

## Filing Information

| | |
|---|---|
| **Document Number** | F20000005257 |
| **FEI/EIN Number** | 80-0764509 |
| **Date Filed** | 11/19/2020 |
| **State** | CA |
| **Status** | ACTIVE |

## Principal Address

2455 190TH ST, STE. G
REDONDO BEACH, CA 90278

## Mailing Address

P.O. BOX 5590
SANTA MONICA, CA 90409

E-Verify

Welcome
David MacCormick

MENU

# Company Information

**Company Name**
Exposhows Inc.

**Company ID Number**
1527520

**Doing Business As (DBA) Name**
Exposhows Inc.

**DUNS Number**
071103110

**Physical Location**

**Address 1**
2455 190th Street

**Address 2**
Suite G

**City**
Redondo Beach

**State**
CA

**Zip Code**
90278

**County**
LOS ANGELES

**Mailing Address**

**Address 1**
PO Box 5590

**Address 2**
--

**City**
Santa Monica

**State**
CA

**Zip Code**

# FPAG
## FLORIDA PYROTECHNIC ARTS GUILD

**David MacCormick**
**Exposhows Inc,**

Member Invoice # 00093 Expires 12/31/2021

FPAG President Linda Westfall 972-867-1172 lwestfall@westfallteam.com

FPAG Treasurer Mike Oldenberg 813-774-0081 mo61408@gmail.com

# CERTIFICATE OF INSURANCE

**ISSUE DATE** 11/13/2020

**PRODUCER**

PROFESSIONAL PROGRAM INSURANCE BROKERAGE
DIVISION OF SPG INSURANCE SOLUTIONS, LLC
1304 SOUTHPOINT BLVD., #101
PETALUMA CA, 94954

**THIS CERTIFICATE IS ISSUED AS A MATTER OF INFORMATION ONLY AND CONFERS NO RIGHTS UPON THE CERTIFICATE HOLDER, THIS CERTIFICATE DOES NOT AMEND, EXTEND OR LATER THE COVERAGE AFFORDED BY THE POLICIES BELOW.**

**INSURER(S) AFFORDING COVERAGE**

**INSURER A:** LLOYD'S OF LONDON

**INSURER B:**

**INSURER C:**

**INSURER D:**

**INSURED**

Exposhows, Inc.
PO Box 5590
Santa Monica, CA 90409

**COVERAGES**

THIS IS TO CERTIFY THAT THE POLICIES OF INSURANCE LISTED BELOW HAVE BEEN ISSUED TO THE NAMED INSURED ABOVE FOR THE PERIOD INDICATED. NOTWITHSTANDING ANY REQUIREMENT, TERM OR CONDITION OF ANY CONTRACT OR OTHER DOCUMENT WITH RESPECT TO WHICH THIS CERTIFICATE MAY BE ISSUED OR MAY PERTAIN, THE INSURANCE AFFORDED BY THE POLICIES DESCRIBED HEREIN IS SUBJECT TO ALL THE TERMS, EXCLUSIONS AND CONDITIONS OF SUCH POLICIES.

| CO LTR | TYPE OF INSURANCE | POLICY NUMBER | POLICY EFFECTIVE DATE (MM/DD/YY) | POLICY EXPIRATION DATE (MM/DD/YY) | LIMITS | |
|---|---|---|---|---|---|---|
| A | GENERAL LIABILITY<br>CLAIMS MADE<br><br>GEN'L AGGREGATE LIMIT APPLIES PER POLICY | PY/20-0204 | 11/11/2020 | 11/11/2021 | EACH ACCIDENT | $ 2,000,000 |
| | | | | | MEDICAL EXP (Any one person) | $ |
| | | | | | FIRE LEGAL LIABILITY | $ 50,000 |
| | | | | | GENERAL AGGREGATE | $ 2,000,000 |
| | | | | | PRODUCTS-COMP/OPS AGG | $ |
| | AUTOMOBILE LIABILITY<br>ANY AUTO<br>ANY OWNED AUTOS<br>SCHEDULED AUTOS<br>HIRED AUTOS<br>NON-OWNED AUTOS | | | | COMBINED SINGLE LIMIT (Ea accident) | $ |
| | | | | | BODILY INJURY (Per person) | $ |
| | | | | | BODILY INJURY (Per accident) | $ |
| | | | | | PROPERTY DAMAGE (Per accident) | $ |
| | EXCESS LIABILITY<br>FOLLOWING FORM | | | | EACH ACCIDENT | $ |
| | | | | | AGGREGATE | $ |
| | WORKERS COMPENSATION AND EMPLOYERS' LIABILITY | | | | WC STATU- TORY LIMITS / OTH- ER | $ |
| | | | | | E.L.EACH ACCIDENT | $ |
| | | | | | E.L. DISEASE-EA EMPLOYEE | $ |
| | | | | | E.L DISEASE-POLICY LIMIT | $ |
| | OTHER | | | | | |

**DESCRIPTION OF OPERATIONS/LOCATIONS/VEHICLES/EXCLUSIONS ADDED BY ENDORSEMENT/SPECIAL PROVISIONS**

Village of Palm Springs, Florida, its officers, subcontractors, employees, volunteers and representatives are included as additional insured as respects to fireworks and pyrotechnic or special effects productions performed by the named insured. Palm Beach County Fire Dept. is additional insured for permit only. This insurance is primary and non-contributory to any other insurance available to the additional insured.

**CERTIFICATE HOLDER**

Village of Palm Springs
226 Cypress Lane
Palm Springs, Florida 33461

Attn: Risk Management

**CANCELLATION**

**SHOULD ANY OF THE ABOVE DESCRIBED POLICIES BE CANCELLED BEFORE THE EXPIRATION DATE THEREOF, THE ISSUING COMPANY WILL ENDEAVOR TO MAIL DAYS WRITTEN NOTICE TO THE CERTIFICATE HOLDER NAMED TO THE LEFT, BUT FAILURE TO MAIL SUCH NOTICE SHALL IMPOSE NO OBLIGATION OR LIABILITY OF ANY KIND UPON THE INSURER, ITS AGENTS OR REPRESENTATIVES.**

**AUTHORIZED REPRESENTATIVE**

Susan Peck

**POLICY NUMBER: PY/20-0204 PYROTECHNIC LIABILITY**

**THIS ENDORSEMENT CHANGES THE POLICY, PLEASE READ IT CAREFULLY.**

Effective Date of This Endorsement: 11/11/2020 to 11/11/2021

**PRIMARY AND NON-CONTRIBUTORY ENDORSEMENT**

Section **XI. OTHER INSURANCE** of the Policy is hereby amended to add the following paragraph:

3. The coverage provided under this Policy to an Additional Insured pursuant to Section **III. PERSONS INSURED,** subsections d) or e), shall be primary and the Additional Insured's own coverage shall be excess and non-contributory but only when required by a written contract executed by the Named Insured prior to the **Display or Special Effects** for which additional insured coverage is required. This Endorsement shall not apply with respect to any other insurance providing additional insured coverage to the Additional Insured.

All other terms and conditions of this Policy remain unchanged.

# CERTIFICATE OF INSURANCE

**ISSUE DATE** 6/3/2020

**PRODUCER**

PROFESSIONAL PROGRAM INSURANCE BROKERAGE
DIVISION OF SPG INSURANCE SOLUTIONS, LLC
1304 SOUTHPOINT BLVD., #101
PETALUMA CA, 94954

**THIS CERTIFICATE IS ISSUED AS A MATTER OF INFORMATION ONLY AND CONFERS NO RIGHTS UPON THE CERTIFICATE HOLDER, THIS CERTIFICATE DOES NOT AMEND, EXTEND OR LATER THE COVERAGE AFFORDED BY THE POLICIES BELOW.**

**INSURER(S) AFFORDING COVERAGE**

**INSURER A:** LLOYD'S OF LONDON

**INSURER B:**

**INSURER C:**

**INSURER D:**

**INSURED**

Exposhows, Inc.
PO Box 5590
Santa Monica, CA 90409

**COVERAGES**

THIS IS TO CERTIFY THAT THE POLICIES OF INSURANCE LISTED BELOW HAVE BEEN ISSUED TO THE NAMED INSURED ABOVE FOR THE PERIOD INDICATED. NOTWITHSTANDING ANY REQUIREMENT, TERM OR CONDITION OF ANY CONTRACT OR OTHER DOCUMENT WITH RESPECT TO WHICH THIS CERTIFICATE MAY BE ISSUED OR MAY PERTAIN, THE INSURANCE AFFORDED BY THE POLICIES DESCRIBED HEREIN IS SUBJECT TO ALL THE TERMS, EXCLUSIONS AND CONDITIONS OF SUCH POLICIES.

| CO LTR | TYPE OF INSURANCE | POLICY NUMBER | POLICY EFFECTIVE DATE (MM/DD/YY) | POLICY EXPIRATION DATE (MM/DD/YY) | LIMITS | |
|---|---|---|---|---|---|---|
| A | GENERAL LIABILITY<br>CLAIMS MADE | PY/20-0087 | 05/17/2020 | 05/17/2021 | EACH ACCIDENT | $ 10,000,000 |
| | | | | | MEDICAL EXP (Any one person) | $ |
| | | | | | FIRE LEGAL LIABILITY | $ 50,000 |
| | GEN'L AGGREGATE LIMIT APPLIES PER POLICY | | | | GENERAL AGGREGATE | $ 10,000,000 |
| | | | | | PRODUCTS-COMP/OPS AGG | $ |
| | AUTOMOBILE LIABILITY | | | | COMBINED SINGLE LIMIT (Ea accident) | $ |
| | ANY AUTO<br>ANY OWNED AUTOS<br>SCHEDULED AUTOS<br>HIRED AUTOS<br>NON-OWNED AUTOS | | | | BODILY INJURY (Per person) | $ |
| | | | | | BODILY INJURY (Per accident) | $ |
| | | | | | PROPERTY DAMAGE (Per accident) | $ |
| | EXCESS LIABILITY<br>FOLLOWING FORM | | | | EACH ACCIDENT | $ |
| | | | | | AGGREGATE | $ |
| | WORKERS COMPENSATION AND EMPLOYERS' LIABILITY | | | | WC STATU- TORY LIMITS / OTH- ER | $ |
| | | | | | E.L.EACH ACCIDENT | $ |
| | | | | | E.L. DISEASE-EA EMPLOYEE | $ |
| | | | | | E.L DISEASE-POLICY LIMIT | $ |
| | OTHER | | | | | |

**DESCRIPTION OF OPERATIONS/LOCATIONS/VEHICLES/EXCLUSIONS ADDED BY ENDORSEMENT/SPECIAL PROVISIONS**

Village of Palm Springs, Florida, its officers, subcontractors, employees, volunteers and representatives are included as additional insured as respects to fireworks and pyrotechnic or special effects productions performed by the named insured. Palm Beach County Fire Dept. is additional insured for permit only. This insurance is primary and non-contributory to any other insurance available to the additional insured.

**CERTIFICATE HOLDER**

Village of Palm Springs
226 Cypress Lane
Palm Springs, Florida 33461

Attn: Risk Management

**CANCELLATION**

**SHOULD ANY OF THE ABOVE DESCRIBED POLICIES BE CANCELLED BEFORE THE EXPIRATION DATE THEREOF, THE ISSUING COMPANY WILL ENDEAVOR TO MAIL DAYS WRITTEN NOTICE TO THE CERTIFICATE HOLDER NAMED TO THE LEFT, BUT FAILURE TO MAIL SUCH NOTICE SHALL IMPOSE NO OBLIGATION OR LIABILITY OF ANY KIND UPON THE INSURER, ITS AGENTS OR REPRESENTATIVES.**

**AUTHORIZED REPRESENTATIVE**

Susan Peck

**POLICY NUMBER: PY/20-0087 PYROTECHNIC LIABILITY**

**THIS ENDORSEMENT CHANGES THE POLICY, PLEASE READ IT CAREFULLY.**

Effective Date of This Endorsement: 05/17/2020 to 05/17/2021

**PRIMARY AND NON-CONTRIBUTORY ENDORSEMENT**

Section **XI. OTHER INSURANCE** of the Policy is hereby amended to add the following paragraph:

3. The coverage provided under this Policy to an Additional Insured pursuant to Section **III. PERSONS INSURED,** subsections d) or e), shall be primary and the Additional Insured's own coverage shall be excess and non-contributory but only when required by a written contract executed by the Named Insured prior to the **Display or Special Effects** for which additional insured coverage is required. This Endorsement shall not apply with respect to any other insurance providing additional insured coverage to the Additional Insured.

All other terms and conditions of this Policy remain unchanged.

**POLICY NUMBER:** PY/20-0087 **PYROTECHNIC LIABILITY**

**THIS ENDORSEMENT CHANGES THE POLICY. PLEASE READ IT CAREFULLY.**

**ADDITIONAL INSURED**

Underwriter's at Lloyd's, London: Referred to in this endorsement as either the "Insurer" or the "Underwriters"

This endorsement modifies insurance provided under the following:

**SECTION III. PERSONS INSURED**

In consideration of the premium charged for the Policy, it is hereby understood and agreed that the following entity(ies) is an additional insured pursuant to Section III. e), but only as respects the specific Display or Special Effects listed on the attached Certificate of Insurance:

Name of Person or Organization (Additional Insured):

Village of Palm Springs
226 Cypress Lane
Palm Springs, Florida 33461

Any coverage afforded to any above person or entity as an Additional Insured shall apply only with respect to **Bodily Injury** or **Property Damage** directly resulting from (1) the **Named Insured's** ongoing operations performed for such specific person and entity; or (2) acts or omissions of the Additional Insured in connection with their general supervisions of the **Named Insured's** ongoing operations. Coverage for such person or entity as an Additional Insured does not apply to:

(i) **Personal Injury** and **Advertising Injury** Liability;

(ii) Fire Legal Liability;

(iii) Employee Benefits Liability;

(iv) **Bodily Injury** or **Property Damage** which the person or entity is obligated to pay as damages by reason of the assumption of liability under a contract or agreement but this shall not apply to liability for damages the person or entity would have in the absence of the contract or agreement;

(v) **Property Damage** to: (1) property owned, used or occupied by or rented to such person or entity; (2) property in the care custody, or control of such person or entity or over which such person or entity is for any purpose exercising physical control; or (3) any work, including materials, parts or equipment furnished in connection with such work, which is performed for the person or entity by or on behalf of the **Named Insured**.

(vi) **Products-Completed Operations Hazards;**

(vii) Any obligation assumed by the Additional Insured in any contract related to the Display or Special Effects listed in the attached Certificate of Insurance.

(viii) Such other **Claims, Accidents**, offenses, damages and/or liabilities which may be excluded pursuant to Section V. Exclusions of the Policy.

**All other terms, exclusions and conditions of this Policy remain unchanged.**

**USDOT Number:** _____ **Date Received:** _____

A Federal Agency may not conduct or sponsor, and a person is not required to respond to, nor shall a person be subject to a penalty for failure to comply with a collection of information subject to the requirements of the Paperwork Reduction Act unless that collection of information displays a current valid OMB Control Number. The OMB Control Number for this information collection is 2126-0008. Public reporting for this collection of information is estimated to be approximately 2 minutes per response, including the time for reviewing instructions, gathering the data needed, and completing and reviewing the collection of information. All responses to this collection of information are mandatory. Send comments regarding this burden estimate or any other aspect of this collection of information, including suggestions for reducing this burden to: Information Collection Clearance Officer, Federal Motor Carrier Safety Administration, MC-RRA, Washington, D.C. 20590.

United States Department of Transportation
**Federal Motor Carrier Safety Administration**

## Endorsement for Motor Carrier Policies of Insurance for Public Liability under Sections 29 and 30 of the Motor Carrier Act of 1980

# FORM MCS-90

**Issued to** EXPOSHOWS INC. **of** California
*(Motor Carrier name)* *(Motor Carrier state or province)*

**Dated at** 6:15 pm **on this** 24th **day of** June, 2020

**Amending Policy Number:** IXG931106A **Effective Date:** June 20th, 2020

**Name of Insurance Company:** GENERAL STAR INDEMNITY COMPANY

**Countersigned by:** _____
*(authorized company representative)*

The policy to which this endorsement is attached provides primary or excess insurance, as indicated for the limits shown *(check only one)*:

◯ *This insurance is primary and the company shall not be liable for amounts in excess of $* _____ *for each accident.*

◯ *This insurance is excess and the company shall not be liable for amounts in excess of $* 4,000,000.00 *for each accident in excess of the underlying limit of $* 1,000,000.00 *for each accident.*

Whenever required by the Federal Motor Carrier Safety Administration (FMCSA), the company agrees to furnish the FMCSA a duplicate of said policy and all its endorsements. The company also agrees, upon telephone request by an authorized representative of the FMCSA , to verify that the policy is in force as of a particular date. The telephone number to call is: 203-328-5571.

Cancellation of this endorsement may be effected by the company of the insured by giving (1) thirty-five (35) days notice in writing to the other party (said 35 days notice to commence from the date the notice is mailed, proof of mailing shall be sufficient proof of notice), and (2) if the insured is subject to the FMCSA's registration requirements under 49 U.S.C. 13901, by providing thirty (30) days notice to the FMCSA (said 30 days notice to commence from the date the notice is received by the FMCSA at its office in Washington, DC).

**Filings must be transmitted online via the Internet at http://www.fmcsa.dot.gov/urs.**

*(continued on next page)*

# DEFINITIONS AS USED IN THIS ENDORSEMENT

***Accident*** includes continuous or repeated exposure to conditions or which results in bodily injury, property damage, or environmental damage which the insured neither expected nor intended.

***Motor Vehicle*** means a land vehicle, machine, truck, tractor, trailer, or semitrailer propelled or drawn by mechanical power and used on a highway for transporting property, or any combination thereof.

***Bodily Injury*** means injury to the body, sickness, or disease to any person, including death resulting from any of these.

***Property Damage*** means damage to or loss of use of tangible property.

***Environmental Restoration*** means restitution for the loss, damage, or destruction of natural resources arising out of the accidental discharge, dispersal, release or escape into or upon the land, atmosphere, watercourse, or body of water, of any commodity transported by a motor carrier. This shall include the cost of removal and the cost of necessary measures taken to minimize or mitigate damage to human health, the natural environment, fish, shellfish, and wildlife.

***Public Liability*** means liability for bodily injury, property damage, and environmental restoration.

The insurance policy to which this endorsement is attached provides automobile liability insurance and is amended to assure compliance by the insured, within the limits stated herein, as a motor carrier of property, with Sections 29 and 30 of the Motor Carrier Act of 1980 and the rules and regulations of the Federal Motor Carrier Safety Administration (FMCSA).

In consideration of the premium stated in the policy to which this endorsement is attached, the insurer (the company) agrees to pay, within the limits of liability described herein, any final judgment recovered against the insured for public liability resulting from negligence in the operation, maintenance or use of motor vehicles subject to the financial responsibility requirements of Sections 29 and 30 of the Motor Carrier Act of 1980 regardless of whether or not each motor vehicle is specifically described in the policy and whether or not such negligence occurs on any route or in any territory authorized to be served by the insured or elsewhere. Such insurance as is afforded, for public liability, does not apply to injury to or death of the insured's employees while engaged in the course of their employment, or property transported by the insured, designated as cargo. It is understood and agreed that no condition, provision, stipulation, or limitation contained in the policy, this endorsement, or any other endorsement thereon, or violation thereof, shall relieve the company from liability or from the payment of any final judgment, within the limits of liability herein described, irrespective of the financial condition, insolvency or bankruptcy of the insured. However, all terms, conditions, and limitations in the policy to which the endorsement is attached shall remain in full force and effect as binding between the insured and the company. The insured agrees to reimburse the company for any payment made by the company on account of any accident, claim, or suit involving a breach of the terms of the policy, and for any payment that the company would not have been obligated to make under the provisions of the policy except for the agreement contained in this endorsement.

It is further understood and agreed that, upon failure of the company to pay any final judgment recovered against the insured as provided herein, the judgment creditor may maintain an action in any court of competent jurisdiction against the company to compel such payment.

The limits of the company's liability for the amounts prescribed in this endorsement apply separately to each accident and any payment under the policy because of anyone accident shall not operate to reduce the liability of the company for the payment of final judgments resulting from any other accident.

*(continued on next page)*

# SCHEDULE OF LIMITS — PUBLIC LIABILITY

| Type of carriage | Commodity transported | January 1, 1985 |
|---|---|---|
| **(1)** For-hire (in interstate or foreign commerce, with a gross vehicle weight rating of 10,000 or more pounds). | Property (nonhazardous) | $750,000 |
| **(2)** For-hire and Private (in interstate, foreign, or intrastate commerce, with a gross vehicle weight rating of 10,000 or more pounds). | Hazardous substances, as defined in 49 CFR 171.8, transported in cargo tanks, portable tanks, or hopper-type vehicles with capacities in excess of 3,500 water gallons; or in bulk Division 1.1, 1.2, and 1.3 materials, Division 2.3, Hazard Zone A, or Division 6.1, Packing Group I, Hazard Zone A material; in bulk Division 2.1 or 2.2; or highway route controlled quantities of a Class 7 material, as defined in 49 CFR 173.403. | $5,000,000 |
| **(3)** For-hire and Private (in interstate or foreign commerce, in any quantity; or in intrastate commerce, in bulk only; with a gross vehicle weight rating of 10,000 or more pounds). | Oil listed in 49 CFR 172.101; hazardous waste, hazardous materials, and hazardous substances defined in 49 CFR 171.8 and listed in 49 CFR 172.101, but not mentioned in (2) above or (4) below. | $1,000,000 |
| **(4)** For-hire and Private (In interstate or foreign commerce, with a gross vehicle weight rating of less than 10,000 pounds). | Any quantity of Division 1.1, 1.2, or 1.3 material; any quantity of a Division 2.3, Hazard Zone A, or Division 6.1, Packing Group I, Hazard Zone A material; or highway route controlled quantities of a Class 7 material as defined in 49 CFR 173.403. | $5,000,000 |

*The schedule of limits shown does not provide coverage. The limits shown in the schedule are for information purposes only.

**USDOT Number:** 0456964 **Date Received:** 06/19/2020

A Federal Agency may not conduct or sponsor, and a person is not required to respond to, nor shall a person be subject to a penalty for failure to comply with a collection of information subject to the requirements of the Paperwork Reduction Act unless that collection of information displays a current valid OMB Control Number. The OMB Control Number for this information collection is 2126-0008. Public reporting for this collection of information is estimated to be approximately 2 minutes per response, including the time for reviewing instructions, gathering the data needed, and completing and reviewing the collection of information. All responses to this collection of information are mandatory. Send comments regarding this burden estimate or any other aspect of this collection of information, including suggestions for reducing this burden to: Information Collection Clearance Officer, Federal Motor Carrier Safety Administration, MC-RRA, Washington, D.C. 20590.

United States Department of Transportation
**Federal Motor Carrier Safety Administration**

## Endorsement for Motor Carrier Policies of Insurance for Public Liability under Sections 29 and 30 of the Motor Carrier Act of 1980

# FORM MCS-90

**Issued to** Exposhows Inc *(Motor Carrier name)* **of** California *(Motor Carrier state or province)*

**Dated at** 12:00 noon **on this** 19th **day of** June, 2020

**Amending Policy Number:** SI8CA00199-201 **Effective Date:** 06/19/2020

**Name of Insurance Company:** Everest Denali Insurance Co

**Countersigned by:** *(author* [signature]

The policy to which this endorsement is attached provides primary or excess insurance, as indicated for the limits shown *(check only one)*:

- (●) *This insurance is primary and the company shall not be liable for amounts in excess of $* 1,000,000.00 *for each accident.*
- ( ) *This insurance is excess and the company shall not be liable for amounts in excess of $* _____ *for each accident in excess of the underlying limit of $* _____ *for each accident.*

Whenever required by the Federal Motor Carrier Safety Administration (FMCSA), the company agrees to furnish the FMCSA a duplicate of said policy and all its endorsements. The company also agrees, upon telephone request by an authorized representative of the FMCSA , to verify that the policy is in force as of a particular date. The telephone number to call is: (317) 853-7250.

Cancellation of this endorsement may be effected by the company of the insured by giving (1) thirty-five (35) days notice in writing to the other party (said 35 days notice to commence from the date the notice is mailed, proof of mailing shall be sufficient proof of notice), and (2) if the insured is subject to the FMCSA's registration requirements under 49 U.S.C. 13901, by providing thirty (30) days notice to the FMCSA (said 30 days notice to commence from the date the notice is received by the FMCSA at its office in Washington, DC).

**Filings must be transmitted online via the Internet at http://www.fmcsa.dot.gov/urs.**

*(continued on next page)*

# DEFINITIONS AS USED IN THIS ENDORSEMENT

***Accident*** includes continuous or repeated exposure to conditions or which results in bodily injury, property damage, or environmental damage which the insured neither expected nor intended.

***Motor Vehicle*** means a land vehicle, machine, truck, tractor, trailer, or semitrailer propelled or drawn by mechanical power and used on a highway for transporting property, or any combination thereof.

***Bodily Injury*** means injury to the body, sickness, or disease to any person, including death resulting from any of these.

***Property Damage*** means damage to or loss of use of tangible property.

***Environmental Restoration*** means restitution for the loss, damage, or destruction of natural resources arising out of the accidental discharge, dispersal, release or escape into or upon the land, atmosphere, watercourse, or body of water, of any commodity transported by a motor carrier. This shall include the cost of removal and the cost of necessary measures taken to minimize or mitigate damage to human health, the natural environment, fish, shellfish, and wildlife.

***Public Liability*** means liability for bodily injury, property damage, and environmental restoration.

The insurance policy to which this endorsement is attached provides automobile liability insurance and is amended to assure compliance by the insured, within the limits stated herein, as a motor carrier of property, with Sections 29 and 30 of the Motor Carrier Act of 1980 and the rules and regulations of the Federal Motor Carrier Safety Administration (FMCSA).

In consideration of the premium stated in the policy to which this endorsement is attached, the insurer (the company) agrees to pay, within the limits of liability described herein, any final judgment recovered against the insured for public liability resulting from negligence in the operation, maintenance or use of motor vehicles subject to the financial responsibility requirements of Sections 29 and 30 of the Motor Carrier Act of 1980 regardless of whether or not each motor vehicle is specifically described in the policy and whether or not such negligence occurs on any route or in any territory authorized to be served by the insured or elsewhere. Such insurance as is afforded, for public liability, does not apply to injury to or death of the insured's employees while engaged in the course of their employment, or property transported by the insured, designated as cargo. It is understood and agreed that no condition, provision, stipulation, or limitation contained in the policy, this endorsement, or any other endorsement thereon, or violation thereof, shall relieve the company from liability or from the payment of any final judgment, within the limits of liability herein described, irrespective of the financial condition, insolvency or bankruptcy of the insured. However, all terms, conditions, and limitations in the policy to which the endorsement is attached shall remain in full force and effect as binding between the insured and the company. The insured agrees to reimburse the company for any payment made by the company on account of any accident, claim, or suit involving a breach of the terms of the policy, and for any payment that the company would not have been obligated to make under the provisions of the policy except for the agreement contained in this endorsement.

It is further understood and agreed that, upon failure of the company to pay any final judgment recovered against the insured as provided herein, the judgment creditor may maintain an action in any court of competent jurisdiction against the company to compel such payment.

The limits of the company's liability for the amounts prescribed in this endorsement apply separately to each accident and any payment under the policy because of anyone accident shall not operate to reduce the liability of the company for the payment of final judgments resulting from any other accident.

*(continued on next page)*

# SCHEDULE OF LIMITS — PUBLIC LIABILITY

| Type of carriage | Commodity transported | January 1, 1985 |
|---|---|---|
| **(1)** For-hire (in interstate or foreign commerce, with a gross vehicle weight rating of 10,000 or more pounds). | Property (nonhazardous) | $750,000 |
| **(2)** For-hire and Private (in interstate, foreign, or intrastate commerce, with a gross vehicle weight rating of 10,000 or more pounds). | Hazardous substances, as defined in 49 CFR 171.8, transported in cargo tanks, portable tanks, or hopper-type vehicles with capacities in excess of 3,500 water gallons; or in bulk Division 1.1, 1.2, and 1.3 materials, Division 2.3, Hazard Zone A, or Division 6.1, Packing Group I, Hazard Zone A material; in bulk Division 2.1 or 2.2; or highway route controlled quantities of a Class 7 material, as defined in 49 CFR 173.403. | $5,000,000 |
| **(3)** For-hire and Private (in interstate or foreign commerce, in any quantity; or in intrastate commerce, in bulk only; with a gross vehicle weight rating of 10,000 or more pounds). | Oil listed in 49 CFR 172.101; hazardous waste, hazardous materials, and hazardous substances defined in 49 CFR 171.8 and listed in 49 CFR 172.101, but not mentioned in (2) above or (4) below. | $1,000,000 |
| **(4)** For-hire and Private (In interstate or foreign commerce, with a gross vehicle weight rating of less than 10,000 pounds). | Any quantity of Division 1.1, 1.2, or 1.3 material; any quantity of a Division 2.3, Hazard Zone A, or Division 6.1, Packing Group I, Hazard Zone A material; or highway route controlled quantities of a Class 7 material as defined in 49 CFR 173.403. | $5,000,000 |

*The schedule of limits shown does not provide coverage. The limits shown in the schedule are for information purposes only.

# Zambelli
FIREWORKS

## *Fireworks Proposal*
## *Village of Palm Springs*
## *July 4, 2021*




***Zambelli Fireworks***
***Boca Raton, Florida***
***Tony Sawdey- Project Manager***
***218-820-2372***

Zambelli
FIREWORKS

# Scope of work

## Display Overview:

**Show Date:** July 4, 2021

**All inclusive Budget and Duration:** $20,000, 20 minute High- Impact display

**Insurance Liability Coverage:** $10 Million dollars per incident clause to cover the Fireworks Display. Zambelli uses the highest insurance premium in the industry, only offered to "AAA" rated companies.

**Transportation Liability Coverage:** $5 Million dollars as required by United States Department of Transportation. (DOT)

**Workers Compensation:** Pyro-technicians will meet all of the requirements of the Workers Compensation Laws of Florida.

**License & Permits:** Zambelli Fireworks will obtain all required local, county and state fireworks permits and approvals.

**Transportation:** Fireworks and equipment will be delivered by qualified CDL drivers with Haz-Mat endorsed licenses as required by US DOT.

**Personnel:** Zambelli Certified Pyro-technicians and Trained Assistants; no subcontractors used.

**Safety Procedures:** Zambelli Fireworks adheres to all safety regulations.
NFPA 1123 and 1126 code will be strictly enforced.

Zambelli
FIREWORKS

# Proposed Show Segments- July 4th

**OPENING:** An opening barrage is designed to attract the attention of the audience and entice them to pay attention…"The show has just begun!" The opening barrage for the display will certainly impress as multiple shots of comet tails and aerial effects will fill the night's air. As the opening barrage grows, the intensity of colors and sound will permeate the skies. **20 seconds.**

**FEATURE PRESENTATION:** The main body of the fireworks display should not be just one shell fired one after another. It's about rhythm, timing, and spacing the perfect effects with one another and building themes throughout the show. Some fireworks are designed to have extreme intensity while others are designed to slow the pace down with slower, softer effects. The design team hand picks every product used to ensure there are nearly no duplicates of tableaus throughout the program. The audience will enjoy a fully designed display.

…. **18-19 Minutes.**

…the **GRAND FINALE:** and it will be GRAND!

Human nature is to remember things last experienced. The Grand Finale is what people will remember the most about a fireworks production. A poor finale will leave an audience disappointed. Zambelli Fireworks has a long tradition of supplying the biggest and best Finales in the industry. It will be loud, it will be full of vibrant colors, it will be long, and it will leave a lasting impression. Hundreds of shots and effects of multi-color shells, gold and silver sparking lights, gold brocade crown shells and other effects coupled with chest-pounding titanium-salutes will be the magical ending of the grand display. The finale will be fired with multiple products and effects to cover every inch of sky… **60 seconds.**

# Zambelli FIREWORKS

**July 4, 2020 Product Size and Quantities**

Opening Barrage:

2- 49 multi shot devices with salutes

Main Body:

350 - three inch color display shells

Multi Shot Devices
10- 35 shot
10- 36 shot
6- 49 shot
6- 100 shot
1- 372 shot
1- 400 shot
1- 408 shot

Grand Finale:

300 - three inch color finale shells
60 - three inch titanium salutes
2- 36 shot finale cakes

**Total Aerial Shells- 710**
**Total 1"-2" Multi Shot Devices- 2856**

**Grand Total = 3566**

178.3
20 | 3566

# Zambelli
FIREWORKS

## Chrysanthemums

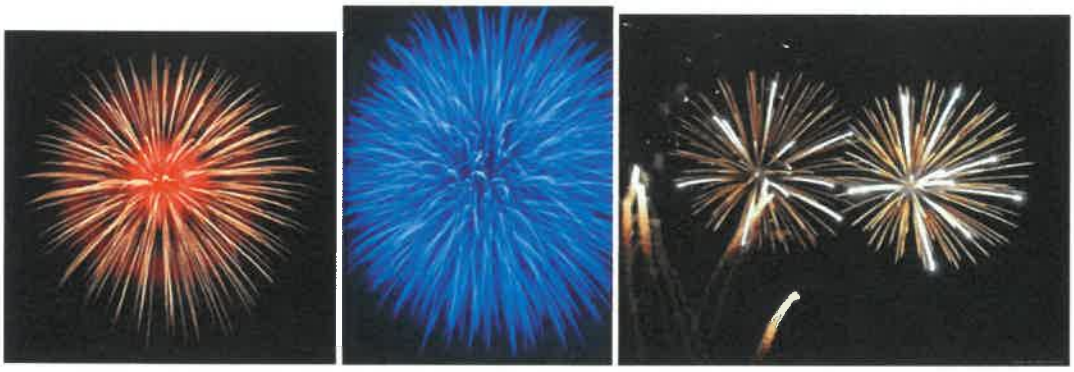

Description: Typically a spherical break of colored stars that leave a trail or sparks behind. May include pistils (center multi break stars) or other features such as multi-colored, half and half, cracking, etc.

3" Shells Body

Red Chrys
Green Chrys
Yellow Chrys
Blooming Silvery Chrys
Blue Chrys
Red, White and Blue Chrys
Green to Purple Chrys
Varied Colorful Flowers
Multi-Color Chrys
Golden Chrys w/rising tails
Silver to Purple Chrys
Glittering Silver to Red Chrys
Purple Chrys with White Pistil
Red Chrys with white Pistil
Gold Wave to Red/Blue Chrys

Red to Blue Chyrs.
Silver to Green Chyrs.
Gold Chrys. w/ rising tails
Glitter Silver to Red Chrys
White Twinkling Chrys.
Spangle Chrys. w/rising tails
Orange Chrys. w/rising tails
Purple Chrys
Yellow Chrys
Silver Chrys w/rising tails
Silver to Green Chrys
Variegated Rainbow Chrys
Green Chrys with Green Pisitl
Silver and Gold Chrys
Multi-Color Chrys to Popping Flowers

# Zambelli
FIREWORKS

## Peonies



Description: Typically a spherical break of colored stars that leave no trail or sparks behind. May include pistils (center multi break stars) or other features such as multi-colored, half and half, cracking, etc.

3" Shells Body

White Peony
Silver Wave to Purple Peony
Yellow Peony
Purple Peony w/Gold Palm
Variegated Peony (rainbow)
Red, White and Blue Peony
Silver to Red Peony
Orange Peony
Silver Wave to Blue Peony
Red to Silver Peony
Golden Peony
Red and Green Peony
Color Changing Peony
Popping Peony (Red)
Half Blue Half Red Peony
Half Green Half White Peony
Pink Peony
Green to Silver to Blue Peony

Blue Peony w/Blue Palm Tree.
Multi-Colored Peony
Green Peony w/Gold Palm Tree
Red to Blue Peony
White Peony w/Blue Pistil
Glittering Peony
Silver to Blue Peony
Half Green Half White Peony
Silver Wave to Purple Peony
Green to Purple Peony
Blue Peony w/titanium reports
Blue to Silver Peony
Sparkling Peony w/Pistil
Popping Peony (White)
Half White Half Red Peony
Golden Waves to Purple Peony
Brilliant Orange Peony
Red to White to Blue Peony

# Zambelli
FIREWORKS

## Crossettes

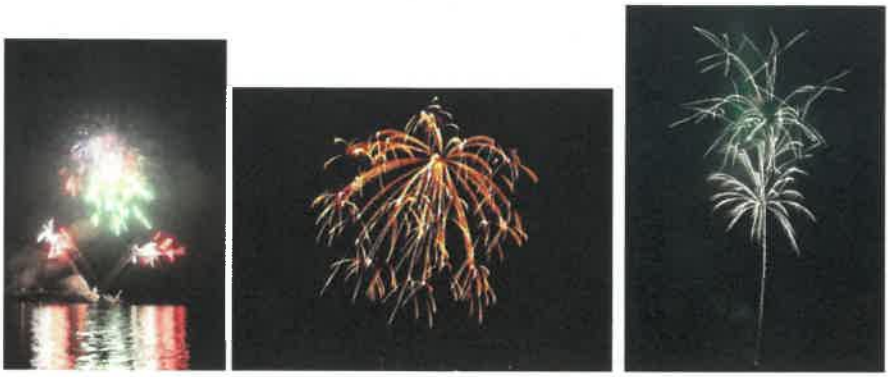

Description: A crossette is a unique shell that breaks into 6 or 8 arms. Then, after some delay, those arms again break into multiple arms criss-crossing each other in a grid-like fashion throughout the sky. Larger caliber shells may even have a third break in all of the arms.

3" Shells Body

Blue Crossettes
Red to Blue Crossettes
Variegated Rainbow Crossettes
Crackling Crossettes
Red to Green Crossettes
Green to Purple Crossettes
Red Crossette Palm Tree
White Flitter Crossettes

Green to Blue Crossettes
Silver Crossettes
Purple and White Crossettes
Gold Crossettes w/rising tails
Green Crossette w/green Tails
Rainbow Crossettes w/red Tails
Blue Crossette Palm Tree
Silver Crossettes

# Zambelli
FIREWORKS

## Duration/Lingering Effects (Willows, Brocades, Kamuros)

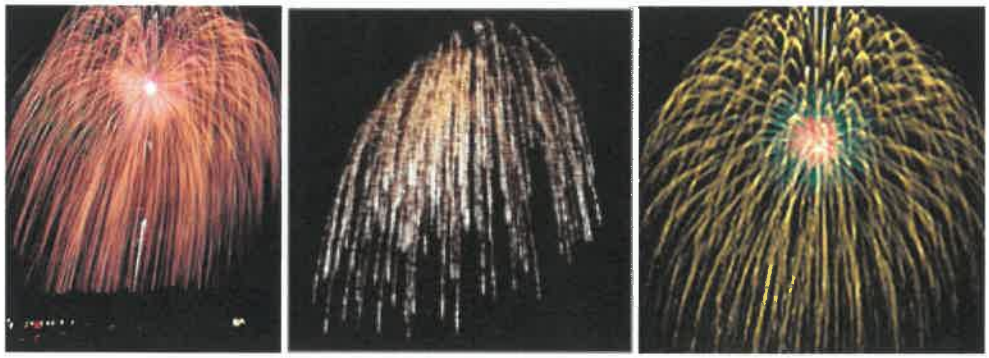

Description: A Long Duration/Lingering Effect is like a Chrysanthemum but burns slowly to the ground leaving a trail of aerial spark dust. These shells are many times gold or silver with various color tips, color changing, or have various colored centers. Zambelli uses many long duration effects at the end of finales to create a sky of gold or silver.

3" Shells Body

- Twilight Glitter w/Purple
- Brocade Crowns
- Brocade Crown to Purple
- Variegated Falling Leaves
- Long Duration Kamuro
- Pixie Dust Willows
- White Poca Shells
- Twilight Glitter w/Red
- Long Duration Red Falling Leaves
- Brocade Crown to Red
- Purple Falling Leaves
- Super Brocade Crowns
- Ultra-Long Duration Gold Kamuro
- Gold Poca Shells

# Zambelli
FIREWORKS

## Dahlias

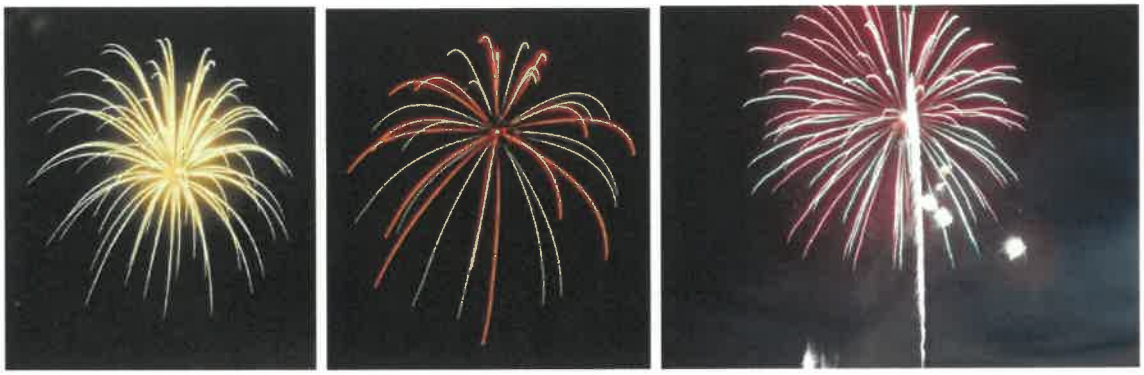

Description: A Dahlia shell is like a peony but uses dramatically larger and fewer stars to create brighter, wider trails of sparks through the air. They are typically very bold, defined colors used to mix up the pace of a show. They many times are also used in finales.

3" Shells Body

Assorted Color Dahlia
Green Dahlia w/Pistil
Yellow Dahlia w/Pistil
Pink Dahlia
Gold Strobe Dahlia
Red Strobe Dahlia
Variegated Dalia
Purple and Red Dahlia
Blue Dahlias w/Pistil
Red Dahlia w/Pisitl
Red and Blue Dahlia
Silver Dahlia
Blue Strobe Dahlia
Purple Strobe Dahlia
White Dahlie w/Purple Tips
White Dahlia w/Red Tips

# Zambelli
FIREWORKS

## Specialty Shells





Description: There's a variety of specialty, premium shells that include horsetail willows, scattering stars, bees, falling leaves, Palm Trees and other unique designs and effects.

**Body**

3" Shells Body

| | |
|---|---|
| Silver Bees | Blue Bees |
| Horsetails | Aluminum King Shells |
| Large Silver Whirls (Serpents) | Blue and Red Spiders |
| Trees of Many Colors | Kaleidoscopes |
| Peacock Feathers | Gold Sparkling Kamikazes |
| Thousands of Gold Waves | Thousands of Red Waves |
| Peacock Tails | Red, White, Blue Dragon Eggs |
| Silver and Purple Strobes | Popping Flowers |
| Treasure Chests | Red Shell of Shells |
| Green Magnesium to Fast Strobe | Green Shell of Shells |
| Multi-Color Shell of Shells | Tourbillion and Multi-Color |
| Pink Blinker Shells (Spanish) | White Blinker Shells (Spanish) |
| White Lightning Shells (Spanish) | Red Hearts with Farfellas (Spanish) |

# Zambelli
FIREWORKS

## Specialty Noise



Description: Noise shells come in many different types. The most popular are cracking, whistling or screamers, thousands of popping flowers, and the extremely loud titanium salutes.

3" Shells Body

Cracking Delight
Diamond Screamer Whistles
Crackling Double Rings
Crackling Coconut Trees
Twice Crackling Rain
Blue Crackling Flowers
Artillery Titanium
Gold Crackling Chrys
Serpents with Reports
Large Silver Screaming Whirls
White and Green Scattering
Blue Crackling Spiders
Tourbillion w/Reports
Green Crackling Flowers
Thundering Tourbillions
Whistles and Stars

Zambelli
FIREWORKS

## Statement of Approach

Zambelli Fireworks believes in creating a simple, turnkey event for our clients. Our approach is to take on the front-end and day-of-event work to provide a great service with little to no hassle for our clients. Our knowledge of the display site and familiarity of the logistics makes us the best candidate for the job. Lastly, our dedication to the ultimate in customer service and creativity is key to the success of our company.

### History:

Zambelli Fireworks traces its US pyrotechnics roots back to 1893 when Antonio Zambelli founded a fireworks manufacturing company in New Castle, PA. The company quickly grew and also became a display fireworks company.

In 1960 the company incorporated in the state of Pennsylvania and grew exponentially over the past 50 years. In 2019 Zambelli Fireworks displayed over 2,000 displays in 38 states and internationally. Company Chairman George Zambelli Jr. and President/CEO Ed Meyer have been actively growing the organization.

Zambelli Fireworks has opened six more regional offices for a total of twelve offices around the US. A new Director of Design/Choreography was recently hired to oversee new products, inventory, show design, and choreography. More project managers have also been hired to work closely with clients to make sure all details are attended to every display.

Today Zambelli Fireworks employs nearly 50 full-time employees and thousands of licensed pyro-technicians. Longevity in the fireworks industry doesn't make good shows. Talented individuals make good shows. Zambelli Fireworks is dedicated to having the best individuals in the industry on-board in order to create the best fireworks displays in the industry.

Zambelli
FIREWORKS

**Equipment:**

Zambelli Fireworks works year-around to ensure all equipment is both up to Federal Codes and safe to use. A huge part of our core company belief is safety for technicians and the area surrounding the display sites. The use of state-of-the-art electrical firing units provides peace of mind that the display will fire safely and accurately.

**Training:**

All technicians that work for Zambelli Fireworks must pass both a written and hand's on test. No lead technicians are ever assigned to a display unless they have significant pyrotechnics experience. All State License requirements are enforced.

**Products (Fireworks):**

Product Guarantees. In our experience some fireworks companies tend to "over-promise" in a proposal and then under-deliver on show day. We encourage all of our clients to understand exactly what they are promised and exactly what they receive on show day. We offer openly an audit of both quantity and quality of our products and equipment.

The quality of Zambelli Fireworks products are the key element of our success. Each type of pyrotechnics is test-fired for results, inspected for problems, federally approved and used exclusively.

Many companies in the fireworks industry buy cheap lines of pyrotechnics in order to put more quantity in a display. Although this might impress on paper, the real test is the actual display. Zambelli aggressively prices displays to put the maximum amount of quantity in a show but never to sacrifice the quality of a shell. All shells will be special effects that will have colored tails, multi-color changing effects, designs or patterns, or other special effects.

Zambelli
FIREWORKS

## Zambelli Fireworks Team

**Danielle Fredrickson**

Office Manager/ Inside Sales/ Customer Service
Office: 561-395-0955
dfredrickson@zambellifireworks.com

**Tony Sawdey**

Project Manager/ Sales/ Certified Technician
19+ Years' Experience
Cell: 218-820-2372
tsawdey@zambellifireworks.com

Form **W-9**
(Rev. October 2018)
Department of the Treasury
Internal Revenue Service

# Request for Taxpayer Identification Number and Certification

▶ Go to *www.irs.gov/FormW9* for instructions and the latest information.

**Give Form to the requester. Do not send to the IRS.**

Print or type. See Specific Instructions on page 3.

1 Name (as shown on your income tax return). Name is required on this line; do not leave this line blank.
Zambelli Fireworks Manufacturing Company

2 Business name/disregarded entity name, if different from above

3 Check appropriate box for federal tax classification of the person whose name is entered on line 1. Check only one of the following seven boxes.

☐ Individual/sole proprietor or single-member LLC ☐ C Corporation ☑ S Corporation ☐ Partnership ☐ Trust/estate

☐ Limited liability company. Enter the tax classification (C=C corporation, S=S corporation, P=Partnership) ▶ _____

**Note:** Check the appropriate box in the line above for the tax classification of the single-member owner. Do not check LLC if the LLC is classified as a single-member LLC that is disregarded from the owner unless the owner of the LLC is another LLC that is not disregarded from the owner for U.S. federal tax purposes. Otherwise, a single-member LLC that is disregarded from the owner should check the appropriate box for the tax classification of its owner.

☐ Other (see instructions) ▶

4 Exemptions (codes apply only to certain entities, not individuals; see instructions on page 3):

Exempt payee code (if any) _____

Exemption from FATCA reporting code (if any) _____

*(Applies to accounts maintained outside the U.S.)*

5 Address (number, street, and apt. or suite no.) See instructions.
120 Marshall Drive

Requester's name and address (optional)

6 City, state, and ZIP code
Warrendale, PA 15086

7 List account number(s) here (optional)

## Part I Taxpayer Identification Number (TIN)

Enter your TIN in the appropriate box. The TIN provided must match the name given on line 1 to avoid backup withholding. For individuals, this is generally your social security number (SSN). However, for a resident alien, sole proprietor, or disregarded entity, see the instructions for Part I, later. For other entities, it is your employer identification number (EIN). If you do not have a number, see *How to get a TIN*, later.

**Note:** If the account is in more than one name, see the instructions for line 1. Also see *What Name and Number To Give the Requester* for guidelines on whose number to enter.

**Social security number**
[ ][ ][ ] - [ ][ ] - [ ][ ][ ][ ]

or

**Employer identification number**
2 5 - 1 0 9 2 9 3 1

## Part II Certification

Under penalties of perjury, I certify that:

1. The number shown on this form is my correct taxpayer identification number (or I am waiting for a number to be issued to me); and
2. I am not subject to backup withholding because: (a) I am exempt from backup withholding, or (b) I have not been notified by the Internal Revenue Service (IRS) that I am subject to backup withholding as a result of a failure to report all interest or dividends, or (c) the IRS has notified me that I am no longer subject to backup withholding; and
3. I am a U.S. citizen or other U.S. person (defined below); and
4. The FATCA code(s) entered on this form (if any) indicating that I am exempt from FATCA reporting is correct.

**Certification instructions.** You must cross out item 2 above if you have been notified by the IRS that you are currently subject to backup withholding because you have failed to report all interest and dividends on your tax return. For real estate transactions, item 2 does not apply. For mortgage interest paid, acquisition or abandonment of secured property, cancellation of debt, contributions to an individual retirement arrangement (IRA), and generally, payments other than interest and dividends, you are not required to sign the certification, but you must provide your correct TIN. See the instructions for Part II, later.

**Sign Here** Signature of U.S. person ▶ Thomas Zambelli Date ▶ 01/27/2021

# General Instructions

Section references are to the Internal Revenue Code unless otherwise noted.

**Future developments.** For the latest information about developments related to Form W-9 and its instructions, such as legislation enacted after they were published, go to *www.irs.gov/FormW9*.

## Purpose of Form

An individual or entity (Form W-9 requester) who is required to file an information return with the IRS must obtain your correct taxpayer identification number (TIN) which may be your social security number (SSN), individual taxpayer identification number (ITIN), adoption taxpayer identification number (ATIN), or employer identification number (EIN), to report on an information return the amount paid to you, or other amount reportable on an information return. Examples of information returns include, but are not limited to, the following.

- Form 1099-INT (interest earned or paid)
- Form 1099-DIV (dividends, including those from stocks or mutual funds)
- Form 1099-MISC (various types of income, prizes, awards, or gross proceeds)
- Form 1099-B (stock or mutual fund sales and certain other transactions by brokers)
- Form 1099-S (proceeds from real estate transactions)
- Form 1099-K (merchant card and third party network transactions)
- Form 1098 (home mortgage interest), 1098-E (student loan interest), 1098-T (tuition)
- Form 1099-C (canceled debt)
- Form 1099-A (acquisition or abandonment of secured property)

Use Form W-9 only if you are a U.S. person (including a resident alien), to provide your correct TIN.

*If you do not return Form W-9 to the requester with a TIN, you might be subject to backup withholding. See* What is backup withholding, *later.*

# CERTIFICATE OF LIABILITY INSURANCE

DATE (MM/DD/YYYY): 2/24/2021

THIS CERTIFICATE IS ISSUED AS A MATTER OF INFORMATION ONLY AND CONFERS NO RIGHTS UPON THE CERTIFICATE HOLDER. THIS CERTIFICATE DOES NOT AFFIRMATIVELY OR NEGATIVELY AMEND, EXTEND OR ALTER THE COVERAGE AFFORDED BY THE POLICIES BELOW. THIS CERTIFICATE OF INSURANCE DOES NOT CONSTITUTE A CONTRACT BETWEEN THE ISSUING INSURER(S), AUTHORIZED REPRESENTATIVE OR PRODUCER, AND THE CERTIFICATE HOLDER.

IMPORTANT: If the certificate holder is an ADDITIONAL INSURED, the policy(ies) must have ADDITIONAL INSURED provisions or be endorsed. If SUBROGATION IS WAIVED, subject to the terms and conditions of the policy, certain policies may require an endorsement. A statement on this certificate does not confer rights to the certificate holder in lieu of such endorsement(s).

| | |
|---|---|
| **PRODUCER**<br>McGowan Allied Specialty<br>20595 Lorain Rd<br>Fairview Park OH 44126<br><br>License#: 973 | **CONTACT NAME:** Mary Jo Picone<br>**PHONE (A/C, No, Ext):** 440-333-6300 **FAX (A/C, No):** 440-333-3214<br>**E-MAIL ADDRESS:** mpicone@mcgowanallied.com |
| **INSURED**<br>Zambelli Fireworks Mfg. Co.<br>120 Marshall Drive<br>Warrendale PA 15086<br><br>ZAMBFIR-01 | **INSURER(S) AFFORDING COVERAGE** — **NAIC #**<br>**INSURER A :** T.H.E. Insurance Company — 12866<br>**INSURER B :**<br>**INSURER C :**<br>**INSURER D :**<br>**INSURER E :**<br>**INSURER F :** |

**COVERAGES** **CERTIFICATE NUMBER:** 296412692 **REVISION NUMBER:**

THIS IS TO CERTIFY THAT THE POLICIES OF INSURANCE LISTED BELOW HAVE BEEN ISSUED TO THE INSURED NAMED ABOVE FOR THE POLICY PERIOD INDICATED. NOTWITHSTANDING ANY REQUIREMENT, TERM OR CONDITION OF ANY CONTRACT OR OTHER DOCUMENT WITH RESPECT TO WHICH THIS CERTIFICATE MAY BE ISSUED OR MAY PERTAIN, THE INSURANCE AFFORDED BY THE POLICIES DESCRIBED HEREIN IS SUBJECT TO ALL THE TERMS, EXCLUSIONS AND CONDITIONS OF SUCH POLICIES. LIMITS SHOWN MAY HAVE BEEN REDUCED BY PAID CLAIMS.

| INSR LTR | TYPE OF INSURANCE | ADDL INSD | SUBR WVD | POLICY NUMBER | POLICY EFF (MM/DD/YYYY) | POLICY EXP (MM/DD/YYYY) | LIMITS | |
|---|---|---|---|---|---|---|---|---|
| A | X COMMERCIAL GENERAL LIABILITY | Y | Y | CPP010316708 | 2/1/2021 | 2/1/2022 | EACH OCCURRENCE | $1,000,000 |
| | [ ] CLAIMS-MADE [X] OCCUR | | | | | | DAMAGE TO RENTED PREMISES (Ea occurrence) | $100,000 |
| | | | | | | | MED EXP (Any one person) | $ |
| | | | | | | | PERSONAL & ADV INJURY | $1,000,000 |
| | GEN'L AGGREGATE LIMIT APPLIES PER: | | | | | | GENERAL AGGREGATE | $10,000,000 |
| | [ ] POLICY [ ] PRO-JECT [ ] LOC | | | | | | PRODUCTS - COMP/OP AGG | $2,000,000 |
| | OTHER: | | | | | | | $ |
| A | AUTOMOBILE LIABILITY | | | CPP010316708 | 2/1/2021 | 2/1/2022 | COMBINED SINGLE LIMIT (Ea accident) | $1,000,000 |
| | X ANY AUTO | | | | | | BODILY INJURY (Per person) | $ |
| | [ ] OWNED AUTOS ONLY [ ] SCHEDULED AUTOS | | | | | | BODILY INJURY (Per accident) | $ |
| | X HIRED AUTOS ONLY X NON-OWNED AUTOS ONLY | | | | | | PROPERTY DAMAGE (Per accident) | $ |
| | | | | | | | | $ |
| A | [ ] UMBRELLA LIAB X OCCUR | | | ELP001108108 | 2/1/2021 | 2/1/2022 | EACH OCCURRENCE | $9,000,000 |
| | X EXCESS LIAB [ ] CLAIMS-MADE | | | | | | AGGREGATE | $9,000,000 |
| | [ ] DED [ ] RETENTION $ | | | | | | | $ |
| | WORKERS COMPENSATION AND EMPLOYERS' LIABILITY Y/N | | | | | | [ ] PER STATUTE [ ] OTH-ER | |
| | ANY PROPRIETOR/PARTNER/EXECUTIVE OFFICER/MEMBER EXCLUDED? [ ] (Mandatory in NH) | N/A | | | | | E.L. EACH ACCIDENT | $ |
| | If yes, describe under DESCRIPTION OF OPERATIONS below | | | | | | E.L. DISEASE - EA EMPLOYEE | $ |
| | | | | | | | E.L. DISEASE - POLICY LIMIT | $ |
| A | Inland Marine / Hull | | | CPP010316708 | 2/1/2021 | 2/1/2022 | HULL LIMIT/SHOW LIMIT | 900,000/1,500,00 |
| A | Hired & Non Owned PHD | | | CPP010316708 | 2/1/2021 | 2/1/2022 | Total/Actual Cash Val | 700,000 |
| A | Excess Auto | | | ELP001295402 | 2/1/2021 | 2/1/2022 | Ea Occ & Aggregate | 4,000,000 |

DESCRIPTION OF OPERATIONS / LOCATIONS / VEHICLES (ACORD 101, Additional Remarks Schedule, may be attached if more space is required)
Sample

**CERTIFICATE HOLDER**

Sample

**CANCELLATION**

SHOULD ANY OF THE ABOVE DESCRIBED POLICIES BE CANCELLED BEFORE THE EXPIRATION DATE THEREOF, NOTICE WILL BE DELIVERED IN ACCORDANCE WITH THE POLICY PROVISIONS.

AUTHORIZED REPRESENTATIVE

© 1988-2015 ACORD CORPORATION. All rights reserved.



The ACORD name and logo are registered marks of ACORD

# CERTIFICATE OF LIABILITY INSURANCE

DATE (MM/DD/YYYY): 2/24/2021

THIS CERTIFICATE IS ISSUED AS A MATTER OF INFORMATION ONLY AND CONFERS NO RIGHTS UPON THE CERTIFICATE HOLDER. THIS CERTIFICATE DOES NOT AFFIRMATIVELY OR NEGATIVELY AMEND, EXTEND OR ALTER THE COVERAGE AFFORDED BY THE POLICIES BELOW. THIS CERTIFICATE OF INSURANCE DOES NOT CONSTITUTE A CONTRACT BETWEEN THE ISSUING INSURER(S), AUTHORIZED REPRESENTATIVE OR PRODUCER, AND THE CERTIFICATE HOLDER.

IMPORTANT: If the certificate holder is an ADDITIONAL INSURED, the policy(ies) must have ADDITIONAL INSURED provisions or be endorsed. If SUBROGATION IS WAIVED, subject to the terms and conditions of the policy, certain policies may require an endorsement. A statement on this certificate does not confer rights to the certificate holder in lieu of such endorsement(s).

| | |
|---|---|
| **PRODUCER**<br>The Graham Company<br>The Graham Building<br>1 Penn Square West<br>Philadelphia PA 19102- | **CONTACT NAME:** Dina Daniele<br>**PHONE (A/C, No, Ext):** 215-567-6300 **FAX (A/C, No):** 215-525-0236<br>**E-MAIL ADDRESS:** DANIELE_UNIT@grahamco.com |
| **INSURED** ZAMBFIR-01<br>Zambelli Fireworks Manufacturing Co.<br>120 Marshall Drive<br>Warrendale, PA 15086 | **INSURER(S) AFFORDING COVERAGE** — **NAIC #**<br>INSURER A : Argonaut Insurance Company — 19801<br>INSURER B : PinnaclePoint Insurance Company — 15137<br>INSURER C :<br>INSURER D :<br>INSURER E :<br>INSURER F : |

**COVERAGES** **CERTIFICATE NUMBER:** 1773597334 **REVISION NUMBER:**

THIS IS TO CERTIFY THAT THE POLICIES OF INSURANCE LISTED BELOW HAVE BEEN ISSUED TO THE INSURED NAMED ABOVE FOR THE POLICY PERIOD INDICATED. NOTWITHSTANDING ANY REQUIREMENT, TERM OR CONDITION OF ANY CONTRACT OR OTHER DOCUMENT WITH RESPECT TO WHICH THIS CERTIFICATE MAY BE ISSUED OR MAY PERTAIN, THE INSURANCE AFFORDED BY THE POLICIES DESCRIBED HEREIN IS SUBJECT TO ALL THE TERMS, EXCLUSIONS AND CONDITIONS OF SUCH POLICIES. LIMITS SHOWN MAY HAVE BEEN REDUCED BY PAID CLAIMS.

| INSR LTR | TYPE OF INSURANCE | ADDL INSD | SUBR WVD | POLICY NUMBER | POLICY EFF (MM/DD/YYYY) | POLICY EXP (MM/DD/YYYY) | LIMITS | |
|---|---|---|---|---|---|---|---|---|
| | COMMERCIAL GENERAL LIABILITY | | | | | | EACH OCCURRENCE | $ |
| | ☐ CLAIMS-MADE ☐ OCCUR | | | | | | DAMAGE TO RENTED PREMISES (Ea occurrence) | $ |
| | | | | | | | MED EXP (Any one person) | $ |
| | | | | | | | PERSONAL & ADV INJURY | $ |
| | GEN'L AGGREGATE LIMIT APPLIES PER: | | | | | | GENERAL AGGREGATE | $ |
| | ☐ POLICY ☐ PRO-JECT ☐ LOC | | | | | | PRODUCTS - COMP/OP AGG | $ |
| | ☐ OTHER: | | | | | | | $ |
| | AUTOMOBILE LIABILITY | | | | | | COMBINED SINGLE LIMIT (Ea accident) | $ |
| | ☐ ANY AUTO | | | | | | BODILY INJURY (Per person) | $ |
| | ☐ OWNED AUTOS ONLY ☐ SCHEDULED AUTOS | | | | | | BODILY INJURY (Per accident) | $ |
| | ☐ HIRED AUTOS ONLY ☐ NON-OWNED AUTOS ONLY | | | | | | PROPERTY DAMAGE (Per accident) | $ |
| | | | | | | | | $ |
| | ☐ UMBRELLA LIAB ☐ OCCUR | | | | | | EACH OCCURRENCE | $ |
| | ☐ EXCESS LIAB ☐ CLAIMS-MADE | | | | | | AGGREGATE | $ |
| | ☐ DED ☐ RETENTION $ | | | | | | | $ |
| A<br>B | WORKERS COMPENSATION AND EMPLOYERS' LIABILITY<br>ANY PROPRIETOR/PARTNER/EXECUTIVE OFFICER/MEMBER EXCLUDED? Y/N [N]<br>(Mandatory in NH)<br>If yes, describe under DESCRIPTION OF OPERATIONS below | N/A | | WC928718697544<br>WCP7001893 | 2/1/2021<br>2/1/2021 | 2/1/2022<br>2/1/2022 | X PER STATUTE ☐ OTH-ER | |
| | | | | | | | E.L. EACH ACCIDENT | $ 1,000,000 |
| | | | | | | | E.L. DISEASE - EA EMPLOYEE | $ 1,000,000 |
| | | | | | | | E.L. DISEASE - POLICY LIMIT | $ 1,000,000 |

**DESCRIPTION OF OPERATIONS / LOCATIONS / VEHICLES** (ACORD 101, Additional Remarks Schedule, may be attached if more space is required)

Display Date: Rain Date: Location:

**CERTIFICATE HOLDER**

SAMPLE

**CANCELLATION**

SHOULD ANY OF THE ABOVE DESCRIBED POLICIES BE CANCELLED BEFORE THE EXPIRATION DATE THEREOF, NOTICE WILL BE DELIVERED IN ACCORDANCE WITH THE POLICY PROVISIONS.

AUTHORIZED REPRESENTATIVE

Kenneth L Ewell

© 1988-2015 ACORD CORPORATION. All rights reserved.



The ACORD name and logo are registered marks of ACORD

Sunbiz.org Division of Corporations
an official State of Florida website



# Detail by Entity Name

Foreign Profit Corporation
ZAMBELLI FIREWORKS MANUFACTURING CO.

**Filing Information**

| | |
|---|---|
| **Document Number** | F94000001031 |
| **FEI/EIN Number** | 25-1092931 |
| **Date Filed** | 03/02/1994 |
| **State** | PA |
| **Status** | ACTIVE |
| **Last Event** | REINSTATEMENT |
| **Event Date Filed** | 09/27/2010 |

**Principal Address**

1060 HOLLAND DRIVE
BOCA RATON, FL 33432

Changed: 04/04/2019

**Mailing Address**

120 Marshall Drive
Warrendale, PA 15086

Changed: 04/22/2019

**Registered Agent Name & Address**

Meyer, Edward J
1 W. CAMINO REAL
BOCA RATON, FL 33487

Name Changed: 06/10/2014

Address Changed: 02/01/2008

**Officer/Director Detail**

**Name & Address**

Title SEC

HALLER, ROBERT
20 S. MERCER ST
NEW CASTLE, PA 16101

Title Treasurer

McKnight, Robert Gary
519 Jennifer Drive
Gibsonia, PA 15044

Title President

Meyer, Edward J
1060 HOLLAND DRIVE
BOCA RATON, FL 33432

**Annual Reports**

| Report Year | Filed Date |
|---|---|
| 2018 | 03/19/2018 |
| 2019 | 04/22/2019 |
| 2020 | 02/26/2020 |

**Document Images**

| | |
|---|---|
| 02/26/2020 -- ANNUAL REPORT | View image in PDF format |
| 04/22/2019 -- ANNUAL REPORT | View image in PDF format |
| 03/19/2018 -- ANNUAL REPORT | View image in PDF format |
| 04/11/2017 -- ANNUAL REPORT | View image in PDF format |
| 03/15/2016 -- ANNUAL REPORT | View image in PDF format |
| 03/18/2015 -- ANNUAL REPORT | View image in PDF format |
| 06/10/2014 -- ANNUAL REPORT | View image in PDF format |
| 04/15/2013 -- ANNUAL REPORT | View image in PDF format |
| 08/27/2012 -- ANNUAL REPORT | View image in PDF format |
| 03/11/2011 -- ANNUAL REPORT | View image in PDF format |
| 09/27/2010 -- REINSTATEMENT | View image in PDF format |
| 06/25/2009 -- ANNUAL REPORT | View image in PDF format |
| 02/01/2008 -- ANNUAL REPORT | View image in PDF format |
| 05/08/2007 -- ANNUAL REPORT | View image in PDF format |
| 06/20/2006 -- ANNUAL REPORT | View image in PDF format |
| 07/15/2005 -- ANNUAL REPORT | View image in PDF format |
| 05/07/2004 -- ANNUAL REPORT | View image in PDF format |
| 07/03/2003 -- ANNUAL REPORT | View image in PDF format |
| 07/02/2002 -- ANNUAL REPORT | View image in PDF format |
| 04/26/2001 -- ANNUAL REPORT | View image in PDF format |
| 07/19/2000 -- ANNUAL REPORT | View image in PDF format |

| | |
|---|---|
| 03/16/1999 -- ANNUAL REPORT | View image in PDF format |
| 03/18/1998 -- ANNUAL REPORT | View image in PDF format |
| 05/12/1997 -- ANNUAL REPORT | View image in PDF format |
| 05/01/1996 -- ANNUAL REPORT | View image in PDF format |
| 05/01/1995 -- ANNUAL REPORT | View image in PDF format |

# Village of Palm Springs

# Executive Brief

**AGENDA DATE:** May 13, 2021

**DEPARTMENT:** Parks & Recreation

---

**ITEM 6.5:**

Resolution No. 2021-13 - Approve Budget Transfer - FY 2021 General Fund - Contingency

**SUMMARY:**

The Parks and Recreation Department is requesting the Village Council to consider a budget transfer within the FY 2021 Budget - General Fund from Council Contingency to Parks and Recreation to cover the purchase and installation of playground equipment/replacement for the Village Center Playground.

The proposed budget transfer, if approved, would amend the department/budget line item based on actual and/or estimated cost projections through the remainder of the fiscal year.

- Council Contingency -Reduced $99,920 (Total Line reduced from $273,000 to $173,080)
- Parks and Recreation - Improvements Other Than Buildings - Increased $99,920 (Total Line Increased to $1,448,901 from $1,348,981)

Note: The proposed budget transfer would support the purchase and installation of new playground equipment for the Village Center Complex. This project was originally funded within FY 2020, however, due to production complications and delays in engineering during the COVID-19 pandemic, this project was not able to be completed and is being proposed to be funded within the current fiscal year. The proposed vendor and installer were contacted and, the Village has been assured that this project will be completed prior to the end of FY 2021.

**FISCAL IMPACT:**

The proposed budget transfer, if approved, would decrease the department's budget line item based on actual and/or estimated cost projections through the remainder of the fiscal year (FY 2021):

- Council Contingency -Reduced $99,920 (Total Line reduced from $273,000 to $173,080)
- Parks and Recreation - Improvements Other Than Buildings - Increased $99,920 (Total Line Increased to $1,448,901 from $1,348,981)

**ATTACHMENTS:**

Proposed Resolution No. 2021-13 - Budget Transfer
Proposed Budget Transfer Form - FY 2021 General Fund - Contingency

# RESOLUTION NO. 2021-13

**A RESOLUTION OF THE VILLAGE COUNCIL OF THE VILLAGE OF PALM SPRINGS, FLORIDA, ADOPTING A GENERAL APPROPRIATION BUDGET TRANSFER AND CORRESPONDING APPROPRIATIONS FOR THE VILLAGE'S NECESSARY OPERATING EXPENSES FOR VARIOUS DEPARTMENTS OF THE VILLAGE FOR THE FISCAL YEAR BEGINNING OCTOBER 1, 2020 AND ENDING SEPTEMBER 30, 2021; AND PROVIDING AN EFFECTIVE DATE.**

**WHEREAS,** the Village of Palm Springs, Florida ("Village") previously adopted the FY 2020 Annual Operating Budget, pursuant to Ordinance No. 2020-13 on September 24, 2020; and

**WHEREAS,** the Village finds it is necessary consider a Village Council Legislative-Contingency Transfer to cover projected increased costs during FY 2020 within the Improvements Other Than Buildings to purchase and install a Village Center Playground; and

**WHEREAS,** adoption of the FY 2020-2021 Amended Annual Operating Budget set forth herein serves a value public purpose.

**NOW THEREFORE, BE IT RESOLVED BY THE VILLAGE COUNCIL OF THE VILLAGE OF PALM SPRINGS, FLORIDA;**

**Section 1.** The above recitals are hereby ratified and confirmed as being true and correct and are hereby incorporated into this Resolution.

**Section 2.** The funds and available resources and revenues more specifically described in "Exhibit A", attached hereto, and incorporated herein by reference, are appropriated to provide the funding for necessary operating and other expenses of departments of the Village for the fiscal year.

**Section 3.** The revenues and expenses as set forth in "Exhibit A" are hereby incorporated by reference and are hereby adopted as the amended budget for FY 2020 - 2021.

**Section 4.** This Resolution shall take effect immediately upon adoption.

Council Member_____offered the foregoing resolution. Council Member_____seconded the motion, and upon being put to a vote, the vote was as follows:

| | Aye | Nay | Absent |
|---|---|---|---|
| BEV SMITH, MAYOR | ____ | ____ | ____ |
| GARY READY, VICE MAYOR | ____ | ____ | ____ |
| DOUG GUNTHER, MAYOR PRO TEM | ____ | ____ | ____ |
| JONI BRINKMAN, COUNCIL MEMBER | ____ | ____ | ____ |
| PATTI WALLER, COUNCIL MEMBER | ____ | ____ | ____ |

The Mayor thereupon declared the Resolution duly passed and adopted this day of May 13, 2021.

VILLAGE OF PALM SPRINGS, FLORIDA

BY:_____
BEV SMITH, MAYOR

ATTEST:

BY:_____
KIMBERLY M. WYNN, VILLAGE CLERK

REVIEWED FOR FORM AND LEGAL SUFFICIENCY

BY: _____
GLEN J. TORCIVIA, VILLAGE ATTORNEY

VILLAGE OFPALM SPRINGS
REQUEST FOR BUDGET TRANSFER OR AMENDMENT
FISCAL YEAR 2020-2021

Transfer Number

| ACCOUNT NUMBER | LINE ITEM DESCRIPTION | CURRENT BUDGET | INCREASE | DECREASE | AMENDED BUDGET |
|---|---|---|---|---|---|
| 01111-59900 | Village Council Legislative- Contingency | $ 273,000.00 | $ - | $ 99,920.00 | $ 173,080.00 |
| 01772-56300 | Improvements Other than Buildings | $ 1,348,981.00 | $ 99,920.00 | | $ 1,448,901.00 |
| | | | | | |
| | | | | | |
| | | | | | |
| | | | | | |
| | | | | | |
| | | | | | |
| | | | | | |
| | | | | | |
| | TOTAL | | $ 99,920.00 | $ 99,920.00 | |

RECEIVED
APR 23 2021
ADMINISTRATION

EXPLANATION : Transfer from 0111-59900 Village Council Legislative - Contingency to 01772-56300 to Improvements Other Than Buildings line item. To purchase and install Village Center Playground.

Prepared by: Justin Lucas Date: 4/22/2021

Approved by: _____ Date: _____

Finance Reviewed: Date: 4/23/2021

____ Approved

____ Denied _____ _____
Village Manager Date

Approved by Council (Date of Meeting) _____

Processed by

Finance: _____ Date: _____

# Village of Palm Springs

# Executive Brief

**AGENDA DATE:** May 13, 2021

**DEPARTMENT:** Parks & Recreation

---

**ITEM 6.6:** Approve Lakewood Gardens Park Improvements (Task Order No. 286 - Work Authorization No. WG-G0) - Professional Engineering Services - Parks and Recreation Department (FY 2021 Budget - General Fund) - Wantman Group, Inc.

**SUMMARY:**

The Parks and Recreation Department has identified a need to complete additional surveying work as part of the Lakewood Gardens Park Improvements Project t o ensure that the approved shade structure and playground equipment are constructed/installed within the proper location. Staff is requesting approval of Work Authorization WG-G0 (Task Order No. 286) with Wantman Group, Inc. (WGI) for professional engineering/surveying services, which will assist in ensuring the correct location/layout for the shade structure and playground equipment prior to construction/installation.

Note: Lakewood Gardens Park was annexed into the Village in July, 2014 as an improved park with a playground installed by Palm Beach County. The park was deeded over to the Village in November 2014 as part of the Village's larger annexation process for this area of the County/Village.

As a result, the Village Council is requested to approved Work Authorization No. WG-G0 (Task Order #286) to support all requisite professional engineering/surveying services (i.e., staking and layout services, etc.) to be completed by WGI.

The proposed tasks and associated costs to provide professional engineering services to complete this project are as follows:

| Task Description | Amount |
|---|---|
| Set up Files and Calculate Points | $ 696 |

| | |
|---|---|
| Verify Improvements | $ 428 |
| Stake Columns | $ 428 |
| Office - Review fieldwork and send deliverable | $ 328 |
| **Total Proposed Costs - Professional Design & Engineering** | **$1,880** |

Note: The Village approved funding in the amount of $400,000 within the FY 2021 Budget - General Fund to support this proposed project.

The Village will not expend more than the amount in the approved budget as it may be adopted/approved each year for these goods and services over the term of the contract.

If approved, the total engineering/surveying services costs for the Lakewood Gardens Park Improvements Project within Task Order #286 (Work Authorization WG-G0 ) will be increased to $7,680 (the original survey work was completed by Engenuity in the amount of $5,800 and the proposed additional survey work will be completed by WGI in the amount of $1,880). If approved, the Village would accepted WGI's pricing as outlined within the previously approved General Consulting Services Continuing Contract with WGI including all terms, conditions and pricing therein.

Note: The Village issued a Request for Qualifications (RFQ) for professional engineering services (RFQ #2019-01 - General Consulting Services Continuing Contracts) in accordance with the Consultants Competitive Negotiation Act (CCNA) - Section 287.55, Florida Statutes.

If approved, it is estimated that the proposed survey work will take approximately one week following the Notice to Proceed by the Village.

The proposed work authorization was prepared by WGI and reviewed by the Parks & Recreation Director, Assistant Public Service Director/Engineer, Assistant Village Manager, Village Attorney and Finance Director.

The Village has worked with the proposed vendor previously and received excellent service and a quality product.

**FISCAL IMPACT:**

Funding to support this proposed Lakewood Gardens project is available within the FY 2021 Budget - General Fund utilizing a Land Water Conservation Fund (LWCF) matching grant and Infrastructure Surtax (Sales Tax) funds ($200,000).

| **Allocated/Estimated Project Funding:** | |
|---|---|
| FY 2021 Approved Budget - General Fund | $400,000.00 |
| **TOTAL APPROVED BUDGET:** | **$400,000.00** |

| ***Estimated/Actual Project Costs:*** | |
|---|---|
| Actual Project Cost - Lakewood Gardens Park Survey (Task Order #286) FY 2020 | $ 5,800.00 |
| Actual Project Cost - Lakewood Gardens Park Shade Structure Purchase (Task Order #286) - FY 2021 | $ 47,611.00 |
| Actual Project Cost - Lakewood Gardens Park Shade Structure Installation (Task Order #286) - FY 2021 | $ 44,000.00 |
| Actual Project Cost - Lakewood Gardens Park Playground Replacement (Task Order #286) - FY 2021 | $172,103.87 |
| Actual Project Cost - Lakewood Gardens Park Bottle Filler Water Fountain Replacement (Task Order #286) - FY 2021 | $ 2,649.00 |
| Actual Project Cost - Lakewood Gardens Park Basketball Court Resurfacing (Task Order #286) - FY 2021 | $ 5,500.00 |
| Actual Project Cost - Lakewood Gardens Park Park Amenities (Tables, Grills and Benches) (Task Order #286) - FY 2021 | $ 10,495.69 |
| Actual Project Cost - Lakewood Gardens Park Concrete (Task Order #286) - FY 2021 | $ 51,212.50 |
| Actual Project Cost - Lakewood Gardens Park Trash/Recycling Receptacles (Task Order #286) - FY 2021 | $ 1,977.90 |
| Proposed Project Cost - Lakewood Gardens Park Pavilion/Picnic Shelter Purchase (Task Order #286) - FY 2021 | $ 24,638.62 |
| Proposed Project Cost - Lakewood Gardens Park Picnic Shelter Installation (Task Order #286) - FY 2021 | $ 21,140.26 |
| Proposed Project Cost - Lakewood Gardens Park Volleyball Improvements Purchase (Task Order #286) - FY 2021 | $ 500.00 |
| Proposed Project Cost - Lakewood Gardens Park Landscape Improvements (Task Order #286) - FY 2021 | $ 10,491.16 |
| Proposed Project Cost - Lakewood Gardens Park Survey for Location of Shade Structure Footers | $ 1,880.00 |
| **TOTAL EQUIPMENT PURCHASE COST:** | **$400,000.00** |

Note: The Village Council previously approved $400,000 toward improvements to Lakewood Gardens Park within the FY 2021 Budget. Additionally, the Village was awarded a Land Water Conservation Fund (LWCF) Grant to complete these park improvements, which includes a 50:50 matching reimbursement ($200,000).

The Village will not expend more than the amount within the approved budget as it may be adopted/amended each year for these goods/services.

**ATTACHMENTS:**

Proposed Work Authorization - Lakewood Gardens Park Improvements (Task Order #286) - Wantman Group
Approved Agreement - Wantman Group
CIP Form - Lakewood Gardens Park

**VILLAGE OF PALM SPRINGS**

**CONSULTING SERVICE WORK AUTHORIZATION**

DATE: 04/19/2021 VILLAGE RFQ. NO.: 2019R-001

WORK AUTHORIZATION NO. WG – G0 FOR CONSULTING

SERVICES TASK ORDER (PROJECT) No. _____ G/L CODE: _____

WGI, INC. PROJECT NO.: 3527.00

PROJECT TITLE: Lakewood Gardens Park – Equipment Layout

This Work Authorization, when executed, shall be incorporated in and shall become an integral part of the Agreement for Professional Services dated April 4th, 2019 between the Village of Palm Springs ("VILLAGE"), and WGI, Inc. ("CONSULTANT") hereafter referred to as the Agreement.

## I. PROJECT DESCRIPTION

WGI shall provide survey services to layout playground equipment for construction purposes.

## II. SCOPE OF SERVICES

The following is a description of the services to be provided under this Task Order.

### TASK 1 - SURVEY SERVICES

**Task 1.1 – Construction Staking/Layout Services**

1. Setup Files and Calculate features from plans/drawings.
2. Field verify adjacent features and align the design to fit per Client's approval.
3. One time staking of the location and two offsets for seven steel columns supporting a proposed shade structure.

## III. DELIVERABLES

1. Field notes.

## IV. SCHEDULE

Upon receipt of Notice-To-Proceed the CONSULTANT will complete the services identified in this Work Authorization within the schedule outlined in Table "A".

**Table "A"**
**Schedule**

| Activity | Time to Complete (Calendar Days) |
|---|---|
| 1.1 Construction Staking/Layout Services | 10 Days |

## V. COMPENSATION AND PAYMENT

The CONSULTANT will perform the tasks as outlined in the scope of services for a lump sum fee of **$1,880.00** as outlined in Table "B".

**Table "B"**
**Budget Summary**

| Description | Total |
|---|---|
| Task 1.1 – Construction Staking/Layout Services | |
| 1. Setup Files and Calculate points | $696.00 |
| 2. Verify improvements | $428.00 |
| 3. Stake Columns | $428.00 |
| 4. Office – Review fieldwork and send deliverable | $328.00 |
| TOTAL | **$1,880.00** |

## VI. ASSUMPTIONS

1. No plans or drawings exists that define the horizontal placement of the columns.
2. Grading (elevations) are not required.

## VII. AGREEMENT REFERENCE

The work authorized under this Work Authorization shall be performed under the terms and conditions described within the Professional Services Agreement dated April 4th, 2019, by and between the Village of Palm Springs ("VILLAGE") and WGI, INC. ("CONSULTANT"). Compensation shall not exceed the hourly rates currently in effect under this Agreement.

**WGI, INC.**

By: _____

Print Name: Jim Sullivan

Title: Project Manager

**VILLAGE OF PALM SPRINGS**

By: _____

Date: _____

Village Attorney's Office

Approved as to form and legality

By: _____

(Required if over $25,000)

# AGREEMENT FOR PROFESSIONAL SERVICES

THIS AGREEMENT, made and entered into this 4th day of April, 2019, by and between the Village of Palm Springs, Florida, hereinafter referred to as "Village", and Wantman Group Inc., hereinafter referred to as "Consultant".

WITNESSETH:

WHEREAS, the Village has provided notice of the desired professional services and carried out the proper selection process pursuant to and in accordance with the Consultant's Competitive Negotiation Act; and,

WHEREAS, the Village represents that it is a Florida municipal corporation with the authority to engage the Consultant and accept the obligation for payment for the services desired; and,

WHEREAS, the Village desires to engage the Consultant to perform certain professional services pertinent to such work in accordance with this Agreement; and

WHEREAS, the Consultant desires to provide such professional services in accordance with this Agreement.

NOW, THEREFORE, in consideration of the premises and the mutual benefits which will accrue to the parties hereto in carrying out the terms of this Agreement, it is mutually understood and agreed as follows:

## I. SCOPE OF WORK; TERM; AND COMPENSATION

The Village has awarded the Consultant the non-exclusive right to provide the City with professional services ("services").

The scope of work for each project shall be as set forth in in each Work Authorization and incorporated herein and shall set forth the duties of the Consultant, the time frame in which Consultant shall perform the duties and the not to exceed amounts to be paid to Consultant upon the conclusion of each task.

This non-exclusive Agreement does not guarantee that the Village will utilize Consultant in any capacity or for any services identified herein. When the Village identifies a need for the Consultant's services, the Village will request a proposal from the Consultant to provide the services requested. The Consultant's proposal shall be submitted in the format of the sample Work Authorization, attached hereto and incorporated herein as **Exhibit "A"** and shall be based on the Consultant's fee schedule agreed to by the Village, attached hereto and incorporated herein as **Exhibit "B"**. If a subconsultant(s) is to be utilized for services under a Work Authorization, the Consultant shall obtain a written proposal from the subconsultant(s) and attach the same to the Consultant's proposal submitted to the Village. Upon receipt of the Consultant's proposal, the Village shall decide in its sole discretion whether to award the Work Authorization to the

Consultant. If the Work Authorization is awarded to the Consultant, the Consultant shall commence the identified services upon receipt of a Notice to Proceed from the Village or upon the Consultant's receipt of a Purchase Order for the services. The Village reserves the right to reject any and all proposals submitted by the Consultant.

This non-exclusive Agreement shall become effective upon approval by the Village Council and execution by the Mayor and shall have an initial term of five (5) years with three (3) optional one (1) year renewals. The Village Manager is authorized to exercise the optional one (1) year renewals. Each fiscal year of this Agreement and any renewals will be subject to the availability of finds lawfully appropriated for its purpose by the Village.

## II. GENERAL DUTIES OF CONSULTANT

A. The relationship of the Consultant to the Village will be that of a professional Consultant, and the Consultant will provide the professional and technical services required under this Agreement in accordance with acceptable professional practices and ethical standards. No employer/employee relationships shall be deemed to be established and the Consultant, its agents, subcontractors, and employees shall be independent contractors at all times.

B. Professional and Technical Services. It shall be the responsibility of the Consultant to work with the Village and apprise it of solutions to problems and the approach or technique to be used towards accomplishment of the requirements of this Agreement.

C. The Consultant designates Brett Oldford, as its representative to act as liaison with the Village. The representative shall manage and coordinate Village projects and is hereby authorized to act on behalf of the Consultant on any other related matter with respect to performance of services for the Village in accordance with the Agreement. Any change to name another person shall be requested in writing to the Village and shall be approved by the Village.

D. Consultant shall attend all meetings, as specified or as defined in this Agreement.

## III. TIME OF PERFORMANCE

A. The Consultant will begin work promptly after the issuance of a Work Authorization.

B. The Consultant's services called for under the Agreement shall be completed in accordance with the schedule contained in each Work Authorization. If the Consultant's services are unreasonably delayed by the Village in excess of 180 days, the time of performance and compensation shall be renegotiated, provided; however, the Consultant as a condition precedent to renegotiations shall notify the Village within fifteen (15) calendar days at the end of the delay of Consultant's proposed additional costs incurred by reason of said delay.

## IV. COMPENSATION

The Village will compensate the Consultant for the services performed and not to exceed the hourly rate provided in **Exhibit "B"** and the budget in each Work Authorization.

A. Lump Sum Work Authorizations: The Village shall pay the Consultant the lump sum, not to exceed amount(s) set forth in an approved Work Authorization. The Consultant expressly acknowledges and agrees that the total cost to complete all services as set forth in an approved Work Authorization shall be a lump sum, not to exceed price, and no additional costs shall be authorized or paid by the Village unless approved by written amendment to the Work Authorization by the Village Manager or Village Council (depending on the Village's required level of approval for such additional costs). In no case shall the Consultant bill the Village for any amount not stated in an approved Work Authorization or written amendment thereto.

B. Reimbursable Expenses: The Consultant's reimbursable, out-of-pocket expenses including, but not limited to, travel, per diem and other living expenses, shall be identified in an approved Work Authorization. The Village shall not be responsible for payment of any such reimbursable, out-of-pocket expenses except as provided for in an approved Work Authorization or amendment thereto. Reimbursement for mileage shall only be for travel required outside of Palm Beach County. Consultant shall not be reimbursed for travel within Palm Beach County and all travel shall be proposed and reimbursed pursuant to section 112. 061, Florida Statutes.

C. Direct Project Expenses: Unless otherwise specifically stated in an approved Work Authorization, charges for printing, reproduction, use of computer-aided design equipment, field equipment, and any laboratory analysis performed by the Consultant or its subconsultants or its subcontractors, and the use of the Consultant's and employee's automobiles shall be identified in an approved Work Authorization. The Village shall not be responsible for payment of any other direct project expenses. **All direct project expenses shall be billed at cost to the Village and the Consultant shall not mark-up or charge an administrative fee in addition to the direct cost for such expenses.**

D. Additional Services: If the Village seeks to utilize the Consultant for any additional services related to the services identified herein, the Village and Consultant will meet and negotiate a reasonable fee for such services. The negotiated fee shall be approved by the Village in the form of a Work Authorization prior to said services being provided.

## V. PAYMENT

The Village agrees that it will use its best effort to pay the Consultant within thirty (30) calendar days from presentation of the Consultant's itemized report and invoice and approval of the Village's representative. The Consultant shall submit monthly invoices, which shall include a report of work completed during the respective invoice period. The report of work shall be

submitted in the format of the sample Monthly Project Status Update, attached hereto and incorporated herein as **Exhibit "C"**. The report shall be adequate in detail to describe work progress (% complete for each task) and written summaries of work completed.

The Consultant shall pay all applicable sales taxes; or the Village shall provide to the Consultant the tax exemption information, where and if appropriate.

In the event sufficient budgeted funds are not available for a new fiscal period, the Village shall notify the Consultant of such occurrence and this Agreement shall terminate on the last day of the current fiscal period without penalty or expense to the Village. The Consultant will be paid for all services rendered through the date of termination

## VI. MISCELLANEOUS PROVISIONS

### A. Ownership Documents:

All reproducible mylar drawings and CADD disks in a format compatible with Village's Computer system shall be given to the Village. Details, design calculations, and all other documents and plans that result from the Consultant's services under this Agreement shall become and remain the property of the Village, including copyright rights, whether the project is completed or not, and will be delivered to the Village upon demand. Consultant reserves the right to retain a copy of all such documents for record purposes. Where such documents are required to be filed with governmental agencies, the Consultant will furnish copies to the Village upon request.

### B. Copies of Documents:

The Consultant shall prepare sufficient copies of all documents necessary to obtain approval through the Village's processes, as well as other governmental authorities. Any use by the Village of such materials in connection with a project other than that for which such materials were prepared without prior written consent and adaptation by the Consultant shall be at the Village's sole risk, and the Consultant shall have no responsibility or liability therefore.

### C. Insurance:

Without limiting any of the other obligations or liabilities of the Consultant, the Consultant shall, at his own expense, provide and maintain in force, until all of its services to be performed under this Agreement have been completed and accepted by the Village (or for such duration as it otherwise specified hereinafter), the following insurance coverages:

1. Worker's Compensation Insurance to apply to all of the Consultant's employees in compliance with the "Worker's Compensation Law" of the State of Florida and all applicable Federal Laws.

a. Employer's Liability with limits of $100,000 per person, $500,000 per occurrence and $100,000 per each disease.

2. Comprehensive General Liability with minimum limits of one million dollars ($1,000,000.00) per occurrence combined single limit for Bodily Injury Liability and Property Damage Liability. Coverage must be afforded on a form no more restrictive than the latest edition of the Comprehensive General Liability policy, without restrictive endorsements other than ISO Endorsement GL 21 06 (Engineers, Architects, or Surveyors Professional Liability exclusion), as Filed by the Insurance Services Office and must include:

   a. Premises and/or Operations
   b. Independent Contractors
   c. Products and Completed Operations - Consultants shall maintain in force until at least three years after completion of all services required under this Agreement, coverage for Products and Completed Operations, including Broad Form Property Damage.
   d. Broad Form Property Damage
   e. Contractual Coverage applicable to this specific Agreement.
   f. Personal Injury Coverage with minimum limits of coverage equal to those required for Bodily Injury Liability.

3. Business Automobile Liability with minimum limits of three hundred thousand dollars ($300,000.00) per occurrence combined single limit for Bodily Injury Liability and Property Damage Liability. Coverage must be afforded on a form no more restrictive than the latest edition of the Business Automobile Liability policy, without restrictive endorsements, as filed by the Insurance Services Office and must include:
   a. Owned Vehicles
   b. Hired and Non-Owned Vehicles
   c. Employers' Non-Ownership

4. Professional Liability Insurance with minimum limits per occurrence of $1,000,000.00.

   Coverage shall be afforded on a form acceptable to the Village. Consultant shall maintain such professional liability insurance until at least one year after a Certificate of Occupancy is issued. Consultant shall insure that sub-consultants used for any portion of the project, maintain adequate levels of Professional Liability Insurance.

5. Prior to commencement of services, the Consultant shall provide to the Village Certificates of Insurance evidencing the insurance coverage specified in the foregoing Paragraphs C1, C2, C3, C4. All policies covered within subparagraphs C1, C2, C3, C4, shall be endorsed to provide the Village with thirty (30) days notice of cancellation and/or restriction. The Village shall be named as an additional

insured as to Consultant's liability on policies referenced in subparagraphs C2. The required Certificates of Insurance shall not only name the types of policies provided, but also shall refer specifically to this Agreement and section and to the above paragraphs in accordance with which insurance is being furnished, and shall state that such insurance is as required by such paragraphs of this Agreement. The Consultant shall also make available to the Village a certified copy of the professional liability insurance policy required by paragraph 4 above for the Village's review. Upon request, the Consultant shall provide copies of all other insurance policies.

6. If the initial insurance policies required by this Agreement expire prior to the completion of the services, renewal Certificates of Insurance of policies shall be furnished thirty (30) days prior to the date of their expiration. For Notice of Cancellation and/or Restriction; the policies must be endorsed to provide the Village with thirty (30) days notice of cancellation and/or restriction.

7. The Consultant's insurance, including that applicable to the Village as an Additional Insured, shall apply on a primary basis.

D. Litigation Services:

It is understood and agreed that Consultant's services include reasonable participation in litigation or dispute resolution arising from this Agreement. Consultant's participation shall include up to 15 hours of services related to litigation or dispute resolution. Any such services in excess of 15 hours shall be an extra service.

E. Assignment:

The Village and the Consultant each binds itself and its successors, legal representatives, and assigns to the other party to this Agreement and to the partners, successors, legal representatives, and assigns of such other party, in respect to all covenants of this Agreement subject to budget considerations and requirements of law; and, neither the Village nor the Consultant will assign or transfer their interest in this Agreement without the written consent of the other.

F. Confidential Information:

During all times that the Consultant is employed on behalf of the Village and at all times subsequent to the date of this contract, all discussions between the Village and the Consultant and all information developed or work products produced by the Consultant during its employment and all matters relevant to the business of the Village not otherwise being a matter of public record shall be deemed to be confidential. All such information and work product shall be protected by the Consultant and shall not be revealed to other persons without the express written permission of the Village, unless mandated by order of the court.

G. Subconsultants:

In the event the Consultant, during the course of the work under this Agreement requires the services of any subcontractors or other professional associates in connection with services covered by this Agreement, Consultant must secure the prior written approval of the Village.

H. Notices:

Whenever either party desires to give notice unto the other, it must be given by written notice, sent by registered United States mail, with return receipt requested, addressed to the party for whom it is intended at the place last written, as the place for giving of notice in compliance with the provisions of this paragraph. For the present, the parties designate the following as the respective places of giving of notice to wit:

VILLAGE of Palm Springs

Attn: Village Manager
226 Cypress Lane
Palm Springs, Florida 33461

CONSULTANT

Wantman Group, Inc.
2035 Vista Parkway
West Palm Beach, FL 33411

I. Request for Qualifications:

The Request for Qualifications (RFQ) is hereby incorporated within and made an integral part of this Agreement.

J. Records:

Records of all expenses relative to each task shall be kept on a generally recognized accounting basis and shall be available to the Village or its authorized representative at mutually convenient times.

K. Personnel:

The Consultant represents that it has or will secure, at its own expense, qualified personnel required in performing the services under this Agreement. All work shall be performed under the direction of a professional, registered under the State of Florida in the field for which he is responsible for performing such services.

L. Equal Opportunity Employment:

Consultant agrees that it will not discriminate against any employee or applicant for employment for work under this Agreement because of race, color, religion, sex, age or national origin. Such action shall include, but not be limited to the following: employment, upgrading, demotion or transfer; recruitment advertising; lay-off or termination; rates of pay or other forms of compensation; and selection for training, including apprenticeship. The Consultant agrees to post in conspicuous places, available to employees and applicants for employment, notices setting forth this non-discrimination clause. This provision applies to all Consultant's subcontractors and it is the responsibility of Consultant to ensure subcontractor's compliance.

M. Prohibition against Contingent Fees:

The Consultant warrants that he/she has not employed or retained any company or person, other than a bona fide employee working solely for the Consultant, to solicit or secure this Agreement, and that he has not paid or agreed to pay any persons, company, corporation, individual or firm, other than a bona fide employee working solely for the Consultant any fee, commission, percentage, gift, or any other consideration, contingent upon or resulting from the award or making of this Agreement.

N. Termination:

This Agreement may be terminated by either party by seven (7) calendar days prior written notice, in the event of substantial failure to perform in accordance with the terms hereof by the other party through no fault of the terminating party. The Village shall have the right to terminate this Agreement for convenience at any time by thirty (30) calendar days written notice to the Consultant. The Consultant agrees to provide all documents to the Village. Further, prior to the Consultant's destruction of any of the above referenced documents, the Village shall be notified and allowed a reasonable period to gain access to and make copies of any such documents. Upon any termination of this Agreement, the Consultant agrees that it shall use its best efforts to work harmoniously with any successor who enters an Agreement to provide services for the Village in order to provide for a smooth transition period.

O. Indemnification:

The Consultant agrees to indemnify and hold harmless the Village, its council members, mayor, officers, employees, and attorneys of, from, and against liabilities, damages, losses and costs, including, but not limited to, reasonable attorney's fees (at all trial and appellate levels), to the extent caused by the negligence, recklessness, or intentionally wrongful conduct of the Consultant, its agents, officers, subconsultants, employees, or anyone else employed or utilized by the Consultant in the performance of this Agreement. The Consultant's liability hereunder shall include all reasonable attorney's fees and costs incurred by the Village in the enforcement of this indemnification provision. The obligations contained in this provision shall survive termination of this Agreement and shall not be limited by the amount of any insurance required to be obtained or maintained under this Agreement.

It is the specific intent of the parties hereto that the foregoing indemnification complies with Section 725.08, Florida Statutes, as amended. Consultant expressly agrees that it will not claim, and waives any claim, that this indemnification violates Section 725.08, Florida Statutes, as amended. Nothing contained in the foregoing indemnification shall be construed as a waiver of any immunity or limitation of liability the Village may have under the doctrine of sovereign immunity or Section 768.28, Florida Statutes.

Neither the Consultant nor the Village nor either party's suppliers, agents, officers, and directors shall have any liability regardless of the theory of recovery, including breach of contract or negligence, to the other party or any other person or entity for any indirect, incidental, special, or consequential damages, cost or expense whatsoever, including but not limited to loss of revenue or profit, whether actual or anticipated, loss of use, failure to realize anticipated savings, loss of or damage to data or other commercial or economic loss. This waiver of consequential damages is made regardless that (i) either party has been advised of the possibility of such damages and (ii) that such damages may be foreseeable.

P. Interest of the Consultant:

The Consultant covenants that it presently has no interest and shall not acquire any interest, direct or indirect, in any Project to which this Agreement pertains or any other interest which would conflict in any manner or degree with the performance of its services hereunder. The Consultant further covenants that in the performance of this Agreement, no person having such interest shall be employed.

Q. Compliance with Laws:

The Consultant shall comply with the applicable requirements of State and applicable County laws and all Codes and Ordinances of the Village as amended from time to time, and that exist at the time of building permit issuance.

R. Jurisdiction; Venue:

The Consultant hereby covenants, consents and yields to the jurisdiction of the State Civil Courts of Palm Springs County, Florida. Any dispute between Consultant and the Village shall be governed by the laws of Florida with venue in Palm Springs County.

S. Internal Dispute between Owner and Consultant:

The Village Manager shall be the final decision maker regarding internal disputes between Village and Consultant.

T. Entire Agreement and Conflicts:

This Agreement, including the RFQ, Consultant's response to the RFQ and any exhibits hereto, constitutes the entire Agreement between the parties hereto and supersedes any prior negotiations, representations, Agreements, and understandings, either written or oral.

This Agreement consists of the terms and conditions provided herein and Exhibits; the RFQ (including all drawings, maps, specifications, exhibits and addenda attached thereto or referenced therein, if any); and Consultant's response to the RFQ. To the extent that there exists a conflict between this Agreement and the remaining documents, the order of precedence shall be the terms, conditions, covenants, and/or provisions of this Agreement, the RFQ (including all drawings, maps, specifications, exhibits and addenda attached thereto) and lastly the Consultant's response to the RFQ. Wherever possible, the provisions of such documents shall be construed in such a manner as to avoid conflicts between provisions of the various documents.

In the event Community Development Block Grant (CDBG) funds are used for a project, the requirements of the CDBG Agreement with Palm Beach County shall apply and in the event of any conflict, the CDBG Agreement shall be first in order of precedence. The Consultant shall abide by all requirements and obligations imposed on the Village (or as otherwise identified) under the CDBG Agreement. This includes all requirements stated in the Requirements for Federally Funded Projects (a copy of which is attached hereto as **Exhibit "D"**). If the CDBG Agreement is terminated for any reason, this Agreement and the Agreement Documents will also be terminated unless agreed in writing by the Village and Consultant to be extended.

U. Palm Beach County Inspector General:

In accordance with Palm Beach County ordinance number 2011-009, the Consultant acknowledges that this Agreement may be subject to investigation and/or audit by the Palm Beach County Inspector General. The Consultant has reviewed Palm Beach County ordinance number 2011-009 and is aware of its rights and/or obligations under such ordinance.

V. Public Records:

Consultant shall comply with Florida's Public Records Act, Chapter 119, Florida Statutes, and, if determined to be acting on behalf of the Village as provided under section 119.011(2), Florida Statutes, specifically agrees to:

(a) Keep and maintain public records required by the Village to perform the service.

(b) Upon request from the Village's custodian of public records or designee, provide the Village with a copy of the requested records or allow the records to be inspected or copied within a reasonable time at a cost that does not exceed the cost provided in Chapter 119, Florida Statutes, or as otherwise provided by law.

(c) Ensure that public records that are exempt or confidential and exempt from public records disclosure requirements are not disclosed except as authorized by law for the duration of this Contract and following completion of this Contract if the Consultant does not transfer the records to the Village.

(d) Upon completion of this Contract, transfer, at no cost, to the Village all public records in possession of the Consultant or keep and maintain public records required by the Village to perform the service. If the Consultant transfers all public records to the Village upon completion of the Contract, the Consultant shall destroy any duplicate public records that are exempt or confidential and exempt from public records disclosure requirements. If the Consultant keeps and maintains public records upon completion of the Contract, the Consultant shall meet all applicable requirements for retaining public records. All records stored electronically must be provided to the Village, upon request from the Village's custodian of public records or designee, in a format that is compatible with the information technology systems of the Village.

**IF THE CONSULTANT HAS QUESTIONS REGARDING THE APPLICATION OF CHAPTER 119, FLORIDA STATUTES, TO THE CONSULTANT'S DUTY TO PROVIDE PUBLIC RECORDS RELATING TO THIS CONTRACT, CONTACT THE CUSTODIAN OF PUBLIC RECORDS OR DESIGNEE AT 561-434-5084, kwynn@vpsfl.org, OR BY MAIL AT VILLAGE OF PALM SPRINGS, 226 CYPRESS LANE, PALM SPRINGS, FL 33461.**

**THE REST OF THE PAGE IS LEFT BLANK**

IN WITNESS WHEREOF, the Village has caused these presents to be executed in its name by its Mayor, and attested and its official Seal to be hereunto affixed by its Village Clerk, and the Consultant has hereunto set its hand and Seal the day and year first written above.

ATTEST:

Kimberly Glynn
Village Clerk

VILLAGE OF PALM SPRINGS

By: _____
Mayor

Approved as to Form:

_____
Village Attorney

WITNESSES:

_____

_____
(Name Printed or Typed)

_____

_____
(Name Printed or Typed)

WANTMAN GROUP, INC.

By: _____
BRETT OLDFORD, PE
DIRECTOR - CIVIL ENGINEERING

State of Florida
County of Palm ~~Springs~~ Beach

BEFORE ME, the foregoing instrument, this 28 day of March, 2019 was acknowledged by Brett Oldford, Director, on behalf of the Corporation and said person executed the same freely and voluntarily for the purpose therein expressed.

WITNESS my hand and seal in the County and State aforesaid this 28 day of March, 2019.

_____
Notary Public
My Commission Expires: 3-31-22

(SEAL)

Cyndy Little
NOTARY PUBLIC
STATE OF FLORIDA
Comm# GG189612
Expires 3/31/2022

# VILLAGE OF PALM SPRINGS
# PRELIMINARY CAPITAL IMPROVEMENT PROJECT DETAIL

**TASK #** 286

**Project Name:** Lakewood Gardens Park Improvements
**Department:** Parks & Recreation
**Location:** Lakewood Gardens Park

**Project Manager:** Justin Lucas
**Date Requested:** 2/27/20
**Date Approved:** 10/1/20

## DESCRIPTION / JUSTIFICATION:

Village annexed Lakewood Gardens Park in July 2014 from Palm Beach County. The existing park amenities remain the same as when it was acquired. Staff applied for and was awarded a Land Water Conservation Fund Grant in the amount of $400,000 (50-50 matching grant). Future amenities proposed include playground replacement, surfacing, shade, landscaping, resurface basketball court, upgrade volleyball court, picnic facility replacement, water fountain, trash cans and enhance the walking path. Survey and engineering was completed as part of LWCF Grant application. Village staff will serve as GC in order to best utilize project funding.

## PROJECT EXPENDITURES / FUNDING SOURCES:

| PROJECT COSTS: | FY1 | FY2 | FY3 | FY4 | FY5 | FY6 | TOTAL |
|---|---|---|---|---|---|---|---|
| Land/Easement Acquisition | | | | | | | $ 0.00 |
| Site Preparation (clearing,soil testing,permitting,survey) | | | | | | | $ 0.00 |
| Architectural Services | | | | | | | $ 0.00 |
| Engineering Services | 7,880.00 | | | | | | $ 7,880.00 |
| Construction | 392,120.00 | | | | | | $ 392,120.00 |
| Equipment | | | | | | | $ 0.00 |
| Improvement (utility, lightning) | | | | | | | $ 0.00 |
| Other (Specify) | | | | | | | $ 0.00 |
| **TOTAL PROJECT COSTS** | $ 400,000.00 | $ 0.00 | $ 0.00 | $ 0.00 | $ 0.00 | $ 0.00 | $ 400,000.00 |

| SOURCES OF FUNDS: | FY1 | FY2 | FY3 | FY4 | FY5 | FY6 | TOTAL |
|---|---|---|---|---|---|---|---|
| General Fund Revenue CY | 200,000.00 | | | | | | $ 200,000.00 |
| One Cent Sales Tax Funding | | | | | | | $ 0.00 |
| Grant Funding: | | | | | | | |
| CDBG | | | | | | | $ 0.00 |
| FRDAP | | | | | | | $ 0.00 |
| PBC | | | | | | | $ 0.00 |
| Other (Specify) | 200,000.00 | | | | | | $ 200,000.00 |
| W/S Enterprise Fund Revenues | | | | | | | $ 0.00 |
| Stormwater Fund Revenues | | | | | | | $ 0.00 |
| Undetermined | | | | | | | $ 0.00 |
| **TOTAL PROJECT REVENUE** | $ 400,000.00 | $ 0.00 | $ 0.00 | $ 0.00 | $ 0.00 | $ 0.00 | $ 400,000.00 |

## OPERATIONAL IMPACT

| OPERATIONAL IMPACT | FY1 | FY2 | FY3 | FY4 | FY5 | FY6 | TOTAL |
|---|---|---|---|---|---|---|---|
| Additional Revenues | | | | | | | |
| Charges for Services | | | | | | | 0.00 |
| Other Revenues | | | | | | | 0.00 |
| Less Additional Expenditures | | | | | | | |
| New Personnel | | | | | | | 0.00 |
| Maintenance and Other Operating | | | | | | | 0.00 |
| Contracts & Leases | | | | | | | 0.00 |
| **Net Annual Impact on Operations** | $ 0.00 | $ 0.00 | $ 0.00 | $ 0.00 | $ 0.00 | $ 0.00 | $ 0.00 |
| **TOTAL** | $ 0.00 | $ 0.00 | $ 0.00 | $ 0.00 | $ 0.00 | $ 0.00 | **$ 0.00** |

**Department Head**

**Village Manager**

# Village of Palm Springs

# Executive Brief

**AGENDA DATE:** May 13, 2021

**DEPARTMENT:** Parks & Recreation

---

**ITEM 6.7:**

Approve Lakewood Gardens Park Picnic Shelter Purchase Contract (Task Order No. 286) - Piggyback - Parks and Recreation Department (FY 2021 Funded - General Fund) - Advanced Recreational Concepts, Inc.

**SUMMARY:**

The Parks and Recreation Department has identified a need to purchase a pavilion/picnic shelter for Lakewood Gardens Park as part of the Village's efforts to renovate the park facility. The proposed new structure, if approved, would contribute to ensuring a safe and enjoyable space for our community and would include a 16' hexagonal structure with an all-steel frame and teal metal roof.

Note: Lakewood Gardens Park was annexed into the Village in July, 2014 as an improved park with a playground installed by Palm Beach County. The park was deeded over to the Village in November 2014 as part of the Village's larger annexation process for this area of the County/Village. To enhance the recreational opportunities within the Lakewood Gardens neighborhood, this proposed pavilion shelter will provide a covered space and, the purchase and installation of a new pavilion/picnic shelter will contribute to the renovation of this important park within the southern portion of our Village.

To ensure the lowest possible price, staff is recommending that the Village piggyback off the current Clay County Florida Contract awarded to Advanced Recreational Concepts, Inc. This selection by Clay County Florida was completed through a competitive selection process - Various Equipment and Amenities (RFP No. 18/19-2 - May 28, 2019).

Note: Through the Clay County contract, the Parks and Recreation Department would be able to obtain a price of $25,291.62, which includes a 5% discount (per the terms of the

approved contract) from their retail catalog pricing.

Within the FY 2021 Budget - General Fund and the Capital Improvement Plan (CIP), the Village Council approved $400,000 for the renovation of Lakewood Gardens Park. This funding, included the $200,000 federal grant award from the Land Water Conservation Fund (LWCF) Grant, that is expected to include the replacement and installation of new playground equipment, safety surfacing, shade coverings, renovation of volleyball and basketball courts, new and improved picnic facilities and enhanced landscaping.

If approved, the Village would accept Advanced Recreational Concepts, Inc's pricing by piggybacking the Clay County Contract, including all terms, conditions and pricing therein. The Village will not expend more than the amount within the approved budget as it may be adopted/amended each year for these goods and services over the term of this contract.

The Village's Purchasing Code, Section 58-9, Accessing contracts of other government agencies, provides that the Village may award a contract by piggybacking or accessing the goods and/or services from any State of Florida contract; contracts of any Florida political subdivision; or from any other governmental entity (other than the Federal government); provided that the same or substantially similar goods and/or services were competitively solicited.

If approved, the proposed permitting and installation of the new pavilion would be completed in conjunction with the previously approved and purchased amenities for the Lakewood Gardens Park renovation and is estimated to be complete within 120 days (September 2021) following the Notice to Proceed by the Village.

The Parks & Recreation Advisory Board considered the proposed shade structure improvement project during their October 7, 2020 and December 9, 2020 meetings and provided input on the proposed design and recommended approval.
The proposed agreement was prepared by the Village Attorney and reviewed by the Parks and Recreation Director, Program Supervisor, Public Service Project Manager, Assistant Village Manager, Interim Planning, Zoning & Building Director and Finance Director.
The Village has not worked with the proposed vendor previously; however, multiple municipalities (i.e., Palm Beach Gardens, Brevard County, Town of Lake Clarke Shores and Village of North Palm Beach) have utilized this vendor and have received excellent service and quality products.

**FISCAL IMPACT:**

Funding to support this proposed Lakewood Gardens project is available within the FY 2021 Budget - General Fund utilizing a Land Water Conservation Fund (LWCF) matching grant and Infrastructure Surtax (Sales Tax) funds ($200,000).

| **Allocated/Estimated Project Funding:** | |
|---|---|

| | |
|---|---|
| FY 2021 Approved Budget - General Fund | $400,000.00 |
| **TOTAL APPROVED BUDGET:** | **$400,000.00** |

| ***Estimated/Actual Project Costs:*** | |
|---|---|
| Actual Project Cost - Lakewood Gardens Park Survey (Task Order #286) FY 2020 | $ 5,800.00 |
| Actual Project Cost - Lakewood Gardens Park Shade Structure Purchase (Task Order #286) - FY 2021 | $ 47,611.00 |
| Actual Project Cost - Lakewood Gardens Park Shade Structure Installation (Task Order #286) - FY 2021 | $ 44,000.00 |
| Actual Project Cost - Lakewood Gardens Park Playground Replacement (Task Order #286) - FY 2021 | $172,103.87 |
| Actual Project Cost - Lakewood Gardens Park Bottle Filler Water Fountain Replacement (Task Order #286) - FY 2021 | $ 2,649.00 |
| Actual Project Cost - Lakewood Gardens Park Basketball Court Resurfacing (Task Order #286) - FY 2021 | $ 5,500.00 |
| Actual Project Cost - Lakewood Gardens Park Park Amenities (Tables, Grills and Benches) (Task Order #286) - FY 2021 | $ 10,495.69 |
| Actual Project Cost - Lakewood Gardens Park Concrete (Task Order #286) - FY 2021 | $ 51,212.50 |
| Actual Project Cost - Lakewood Gardens Park Trash/Recycling Receptacles (Task Order #286) - FY 2021 | $ 1,977.90 |
| Proposed Project Cost - Lakewood Gardens Park Pavilion/Picnic Shelter Purchase (Task Order #286) - FY 2021 | $ 25,291.62 |
| Proposed Project Cost - Lakewood Gardens Park Picnic Shelter Installation (Task Order #286) - FY 2021 | $ 21,140.26 |
| Proposed Project Cost - Lakewood Gardens Park Volleyball Improvements Purchase (Task Order #286) - FY 2021 | $ 500.00 |
| Proposed Project Cost - Lakewood Gardens Park Landscape Improvements (Task Order #286) - FY 2021 | $ 10,491.16 |
| Proposed Project Cost - Lakewood Gardens Park Survey for Location of Shade Structure Footers | $ 1,880.00 |
| **TOTAL EQUIPMENT PURCHASE COST:** | **$400,000.00** |

Note: The Village Council previously approved $400,000 toward improvements to Lakewood Gardens Park within the FY 2021 Budget. Additionally, the Village was awarded a Land Water Conservation Fund (LWCF) Grant to complete these park improvements, which includes a 50:50 matching reimbursement ($200,000).

The Village will not expend more than the amount within the approved budget as it may be adopted/amended each year for these goods/services.

**ATTACHMENTS:**

Proposed Piggyback Agreement - Advanced Recreational Concepts, Inc.
Approval to Piggyback - Advanced Recreational Concepts, Inc.
Proposal - Advanced Recreational Concepts
Clay County, Florida - Request for Proposals (RFP 1819-2) - Award Notice
Clay County, Florida - Request for Proposals (RFP 1819-2) Bid Submittal Documents - Advanced Recreational Concepts, Inc. - Bid Submittal
Clay County, Florida - Request for Proposals (RFP 1819-2) Equipment & Amenities Parks & Playgrounds - March 19, 2019
Clay County, Florida - Request for Proposals (RFP 1819-2) - Bid Tabulation
Clay County, Florida - Request for Proposals (RFP 1819-2) - Approval
Advanced Recreational Concepts, Inc. - Pricing List
CIP Form - Lakewood Gardens Park

# AGREEMENT FOR PURCHASE OF PARK PICNIC PAVILION

This Agreement for the purchase of a park picnic pavilion, hereafter ("Agreement") is made as of the _____ day of _____, 2021, by and between the **Village of Palm Springs**, 226 Cypress Lane, Palm Springs, Florida 33461-1699, a municipal corporation organized and existing under the laws of the State of Florida, hereinafter referred to as the VILLAGE, and **Advanced Recreational Concepts, Inc,** 3125 Skyway Circle, Melbourne, Florida 32934, a corporation authorized to do business in the State of Florida, hereinafter referred to as the VENDOR.

## RECITALS

WHEREAS, the VILLAGE wishes to engage the VENDOR for the purchase of a new picnic pavilion for the Lakewood Gardens Park; and,

WHEREAS, Clay County, Florida, through its competitive selection process awarded a contract for Various Equipment and Amenities for Parks and Playgrounds (RFP # 18/19-2) (hereafter, "Clay County Contract") to the VENDOR which included substantially the services sought by the VILLAGE; and,

WHEREAS, the VILLAGE requested and the VENDOR has executed this Agreement with the VILLAGE for purchase of a new picnic pavilion in Lakewood Gardens Park based on the pricing and terms and conditions of the Clay County Contract; and,

WHEREAS, the VILLAGE desires to accept VENDOR's pricing by piggy-backing the Clay County Contract including all terms, conditions and pricing therein.

NOW THEREFORE, in consideration of the mutual promises set forth herein, the receipt and sufficiency of which are hereby acknowledged, the parties hereto agree as follows:

1. Recitals. The parties agree that the recitals set forth above are true and correct and are fully incorporated herein by reference.

2. Clay County Contract. The Clay County Contract with the VENDOR is hereby expressly made a part of this Agreement as fully as if set forth at length herein. The VILLAGE shall have all rights, obligations and remedies authorized to the School Board under the Clay County Contract and all associated and applicable Contract Documents as defined therein.

3. VENDOR's Proposal. In accordance with the terms and conditions in the Clay County Contract and pricing therein, the VENDOR shall provide for the purchase of a picnic pavilion in Lakewood Gardens Park as requested by the VILLAGE. The goods and services to be provided by the VENDOR shall be commenced subsequent to the execution and approval of this Agreement by the VILLAGE in accordance with the terms of the Clay County Contract.

4. Contract Documents and Conflict of Terms and Conditions. The Contract Documents for this Agreement are compromised of the following:

A. All written modifications and amendments hereto;
B. This Agreement (including all exhibits);
C. Clay County Contract (including all Contract Documents as defined therein).

The Contract Documents of this Agreement are intended to be complementary and interpreted in harmony so as to avoid conflict with the words and phrases interpreted in a manner consistent with construction and design industry standards. In the event of any inconsistency, conflict or ambiguity between or among the Contract Documents of this Agreement, the Contract Documents of this Agreement shall take precedence in the following order:

A. All written modifications and amendments hereto;
B. This Agreement;
C. The Clay County Contract.

5. Compensation to VENDOR. Payments by the VILLAGE to the VENDOR under this Agreement shall not exceed the amount of compensation stated in the VENDOR's proposal to the VILLAGE and shall be based on the unit prices found in the Clay County Contract, which shall be considered the "Contract price". VENDOR waives consequential or incidental damages for claims, disputes or other matters in question arising out of or relating to this Agreement. Payments made to VENDOR shall not be in excess of the amount provided in an approved budget of the VILLAGE.

6. Miscellaneous Provisions.

6.1 The VILLAGE and VENDOR each binds itself, its partners, its successors, assigns and legal representatives to the other party hereto, its partners, successors, assigns and legal representatives in respect of all covenants, agreements and obligations contained in the Contract Documents.

6.2 VENDOR shall maintain the insurance as required in the Clay County Contract applicable to the goods and services being delivered hereunder. Said insurance will name the VILLAGE as an additional insured.

6.3 Headings and References & Exhibits: The headings contained in this Contract are inserted for convenience of reference only and shall not be a part or control or affect the meaning hereof. All references herein to Exhibits are to the exhibits hereto, each of which shall be incorporated into and deemed to be a part of this Contract.

6.4 Counterparts: This Contract may be executed in two or more counterparts, each of which shall be deemed to be an original, but all of which shall be deemed to be an original, but each of which together shall constitute one and the same instrument.

6.5 Entire Contract; Amendment and Waiver: This Contract (together with the Exhibits hereto) supersedes any and all prior negotiations and oral or written agreements heretofore made relating to the subject matter hereof and, except for written agreements, if any, executed and delivered simultaneously with or subsequent to the date of this Contract, constitutes the entire agreement of the parties relating to the subject matter

hereof. This Contract may not be altered or amended except by a writing signed by the parties hereto. No waiver of any of the terms or conditions of this Contract shall be effective unless in writing and executed by the party to be changed therewith. No waiver of any condition or of the breach of any term, covenant, representation, warranty or other provision hereof shall be deemed to be construed as a further or continuing waiver of any such condition or breach or a waiver of any other condition or of any breach of any other term, covenant, representation, warranty or other provision contained in this Contract.

6.6 Successors and Assigns: This Contract shall be binding upon, and shall inure to the benefit of the parties hereto and their respective successors and assigns.

6.7 Governing Law; Consent to Jurisdiction: This Contract shall be governed by and construed and interpreted in accordance with the laws of the State of Florida. Each of the parties hereto (a) irrevocably submit itself to the exclusive jurisdiction of the Fifteenth Judicial Circuit Court in and for Palm Beach County, Florida for state actions and jurisdiction of the United States District Court for the Southern District of Florida, Palm Beach Division, for the purposes of any suit, action or other proceeding arising out of, or relating to, this Contract; (b) waives and agrees not to assert against any party hereto, by way of motion, as a defense of otherwise, in any suit, action or other proceeding, any claim that it is not personally subject to the jurisdiction of the above-named courts for any reason whatsoever; and (ii) to the extent permitted by applicable law, any claim that such suit, action or proceeding by any part hereto is brought in an inconvenient forum or that the venue of such suit, action or proceeding is improper or that this Contract or the subject matter hereof may not be enforced in or by such courts.

6.8 Third Party Beneficiary rights: This Contract shall create no rights or claims whatsoever in any person other than a party herein.

6.9 Severability: If any one or more of the provisions of the Contract shall be held to be invalid, illegal or unenforceable in any respect, the validity, legality and enforceability of the remaining provisions hereof shall not in any way be affected or impaired thereby.

6.10 Effective date and Term: The effective date of this Contract is the date the Contract is approved by the Village Council. The term shall be the same as the current Clay County Contract. Any renewals shall be based on the renewal of the Clay County Contract.

6.11 Public Records: VENDOR shall comply with Florida's Public Records Act, Chapter 119, Florida Statutes, and, if determined to be acting on behalf of the VILLAGE as provided under section 119.011(2), Florida Statutes, specifically agrees to:

A. Keep and maintain public records required by the VILLAGE to perform the service.

B. Upon request from the VILLAGE's custodian of public records or designee, provide the VILLAGE with a copy of the requested records or allow the records

to be inspected or copied within a reasonable time at a cost that does not exceed the cost provided in Chapter 119, Florida Statutes, or as otherwise provided by law.

C. Ensure that public records that are exempt or confidential and exempt from public records disclosure requirements are not disclosed except as authorized by law for the duration of this Contract and following completion of this Contract if the VENDOR does not transfer the records to the VILLAGE.

D. Upon completion of this Contract, transfer, at no cost, to the VILLAGE all public records in possession of the VENDOR or keep and maintain public records required by the VILLAGE to perform the service. If the VENDOR transfers all public records to the VILLAGE upon completion of the Contract, the VENDOR shall destroy any duplicate public records that are exempt or confidential and exempt from public records disclosure requirements. If the VENDOR keeps and maintains public records upon completion of the Contract, the VENDOR shall meet all applicable requirements for retaining public records. All records stored electronically must be provided to the VILLAGE, upon request from the VILLAGE's custodian of public records or designee, in a format that is compatible with the information technology systems of the VILLAGE.

**IF THE VENDOR HAS QUESTIONS REGARDING THE APPLICATION OF CHAPTER 119, FLORIDA STATUTES, TO THE VENDOR'S DUTY TO PROVIDE PUBLIC RECORDS RELATING TO THIS CONTRACT, CONTACT THE CUSTODIAN OF PUBLIC RECORDS OR DESIGNEE AT 561-434-5084, kwynn@vpsfl.org, OR BY MAIL AT VILLAGE OF PALM SPRINGS, 226 CYPRESS LANE, PALM SPRINGS, FL 33461.**

6.12 Preparation: This Contract shall not be construed more strongly against either party regardless of who was more responsible for its preparation.

6.13 PALM BEACH COUNTY IG: In accordance with Palm Beach County ordinance number 2011-009, the VENDOR acknowledges that this Agreement may be subject to investigation and/or audit by the Palm Beach County Inspector General. The VENDOR has reviewed Palm Beach County ordinance number 2011-009 and is aware of its rights and/or obligations under such ordinance.

6.14 All notices required in this Agreement shall be sent by certified mail, return receipt requested, and sent to the addresses appearing on the first page of this Agreement.

6.15 The VILLAGE is exempt from payment of Florida State Sales and Use Tax. The VENDOR shall not be exempted from paying sales tax to its suppliers for materials used to fill contractual obligations with the VILLAGE, nor is the VENDOR authorized to use the VILLAGE'S Tax Exemption Number in securing such materials.

7. Indemnity and Warranty.

Shall be as set forth in the Clay County Contract.

8. Defaults; Termination of Agreement.

A. If the Village Manager deems that the VENDOR is in default for failure to supply the requested goods or has failed in any other respect to satisfactorily perform the services specified in this Agreement, the Village Manager may give written notice to the VENDOR specifying defaults to be remedied within fifteen (15) days.

If the VENDOR does not remedy defaults within fifteen (15) days or commence steps to remedy default to the reasonable satisfaction of the Village Manager, the VILLAGE may secure such services from another VENDOR; or

If after thirty (30) days the VENDOR has not remedied defaults or commenced steps to remedy defaults to the satisfaction of the Village Manager, the VILLAGE may elect to terminate this Agreement.

B. Notwithstanding paragraph A, the VILLAGE reserves the right and may elect to terminate this Agreement, without cause, upon thirty (30) days written notice. At such time, the VENDOR would be compensated only for the goods purchased to the date of termination and any other amounts due and owing to VENDOR at the time of termination. No compensation shall be paid for disengagement, wind-down or other costs incurred due to termination of this Agreement.

9. Public Entity Crimes.

VENDOR acknowledges and agrees that a person or affiliate who has been placed on the convicted vendor list following a conviction for a public entity crime may not submit a bid, proposal, or reply on a contract to provide any goods or services to a public entity; may not submit a bid, proposal, or reply on a contract with a public entity for the construction or repair of a public building or public work; may not submit bids, proposals, or replies on leases of real property to a public entity; may not be awarded or perform work as a contractor, supplier or sub-contractor under a contract with any public entity; and may not transact business with any public entity in excess of the threshold amount provided in Section 287.017, Florida Statutes, for CATEGORY TWO for a period of 36 months following the date of being placed on the convicted vendor list. VENDOR will advise the VILLAGE immediately if it becomes aware of any violation of this statute. As provided in Section 287.135, Florida Statutes, as amended from time to time, by entering into the Contract Documents, VENDOR certifies that it is not participating in a boycott of Israel. The VILLAGE and VENDOR agree that the VILLAGE will have the right to terminate the Contract Documents if VENDOR is found to have been placed on the Scrutinized Companies that Boycott Israel List or is engaged in a boycott of Israel.

10. Fiscal Non-funding.

In the event sufficient budgeted funds are not available for a new fiscal period, the VILLAGE shall notify the VENDOR of such occurrence and this Agreement shall terminate on the last day of the current fiscal period without penalty or expense to the VILLAGE. The VENDOR will be paid for all services rendered through the date of termination.

11. Scrutinized Companies.

As provided in F.S. 287.135, by entering into any agreement with the VILLAGE, or performing any work in furtherance hereof, the VENDOR certifies that VENDOR and VENDOR's affiliates, suppliers, subcontractors and consultants that will perform hereunder that at the time the VENDOR submits a bid or proposal for a contract or before the VENDOR enters into or renews a contract with an agency or local governmental entity for goods or services of $1 million or more, the company must certify that the VENDOR is not on the Scrutinized Companies with Activities in Sudan List or the Scrutinized Companies with Activities in the Iran Petroleum Energy Sector List and that it does not have business operations in Cuba or Syria. Also, at the time a VENDOR submits a bid or proposal for a contract or before the VENDOR enters into or renews a contract with an agency or local governmental entity for goods or services of any amount, the VENDOR must certify that it is not participating in a boycott of Israel. If the VILLAGE determines, using credible information available to the public, that a false certification has been submitted by the VENDOR, the VILLAGE's Agreement may be terminated and a civil penalty equal to the greater of $2 million or twice the amount of the Agreement shall be imposed, pursuant to Section 287.135, Florida Statutes.

12. E-Verify.

Pursuant to Section 448.095(2), Florida Statutes, beginning on January 1, 2021, the CONTRACTOR shall:

A. Register with and use the E-Verify system to verify the work authorization status of all newly hired employees and require all subcontractors (providing services or receiving funding under this Agreement) to register with and use the E-Verify system to verify the work authorization status of all the subcontractors' newly hired employees;

B. Secure an affidavit from all subcontractors (providing services or receiving funding under this Agreement) stating that the subcontractor does not employ, contract with, or subcontract with an "unauthorized alien" as defined in Section 448.095(1)(k), Florida Statutes;

C. Maintain copies of all subcontractor affidavits for the duration of this Agreement and provide the same to the Owner upon request;

Comply fully, and ensure all of its subcontractors comply fully, with Section 448.095, Florida Statutes;

D. Be aware that a violation of Section 448.09, Florida Statutes (Unauthorized aliens; employment prohibited) shall be grounds for termination of this Agreement; and,

E. Be aware that if the VILLAGE terminates this Agreement under Section 448.095(2)(c), Florida Statutes, the CONTRACTOR may not be awarded a contract for at least one (1) year after the date on which the Agreement is terminated and will be liable for any additional costs incurred by the VILLAGE as a result of the termination of the Agreement.

IN WITNESS WHEREOF, the VILLAGE and VENDOR have caused this Agreement to be executed the day and year shown above.

**VILLAGE OF PALM SPRINGS, FLORIDA**

By: _____
Bev Smith, Mayor

ATTEST

_____
Kimberly Wynn, Village Clerk

Approved as to form and legal sufficiency:

_____
Glen J. Torcivia, Village Attorney

[Signatures continue on next page]

VENDOR:

**ADVANCED RECREATIONAL CONCEPTS, INC.**

By: _____

Print Name: _Paul Bickham_____

Title: _Manager_____

[Corporate Seal]

STATE OF FLORIDA )
COUNTY OF Brevard )

The foregoing instrument was acknowledged before me this 27 day of April, ~~2019~~ 2021 by Paul Bickham, as Manager of Advanced Recreational Concepts, LLC., a corporation authorized to do business in the State of Florida, and who is personally known to me or who has produced the following Driver license as identification.

Notary Public

TAMARA L ORTIZ
Notary Public - State of Florida
Commission # GG 261965
My Comm. Expires Sep 25, 2022
Bonded through National Notary Assn.

Print Name: Tamara L. Ortiz
My commission expires: 9/25/22

April 27th, 2021

To Whom It may concern:
Advanced Recreational Concepts and Playspace Services would like The Village of Palm Springs, FL to utilize the Clay County contract, RFP No.18/19-2, Various Equipment and Amenities for Parks and Playgrounds. Reference the Clay County Contract on page 12, bullet 30 confirming the Clay County contract is allowed to be used by Other Government Agencies. Please let me know if you have any questions regarding the Clay Contract.

Paul Bickham

Paul Bickham

I can be reached at:
321-514-3184
Pbickham@arcflorida.com

*3125 Skyway Circle*
*Melbourne, FL 32934*
*Toll Free: 866-957-2355*
*FAX: 866-957-2356*
*www.ARCFlorida.com*

**Advanced Recreational Concepts, LLC**
Melbourne, FL 32934
Phone: 321-775-0605 / Fax: 321-242-2216

# Proposal

| | |
|---|---|
| Organization | Village of Palm Springs<br>226 Cypress Lane<br>Palm Springs, FL 33461 |
| Prepared For | Garrett Pearson |
| Ship To | Lakewood Gardens Park<br>4000 Lakewood Rd<br>Palm Springs, FL 33462 |

| | |
|---|---|
| Date | 4/27/2021 |
| Quotation # | 23061 |
| Prepared By | Jason Powers |
| Payment Terms | Net 30 |
| Prices Valid Until | 6/27/2021 |
| Project Name | Shelter |
| Customer Phone | 5614345111 |
| County | Palm Beach |

| Product ID | Description | Qty | U/M | Price | Total |
|---|---|---|---|---|---|
| | PROPOSAL BASED ON SUPPLY & DELIVERY. INSTALLATION SEPARATE ON PSS # 20799 | | | | |
| | Custom Shelter Design - 16' (AS) Hexagonal Structure; 5:12 Pitch; 7'-6" Eave Height; X6 Standard Column Design; 6" Sub Surface Mount Columns w/ External Hardware | 1 | | 16,389.63 | 16,389.63T |
| | Discount based on Clay County #18/19-2, -5% on SRP Shelters Products | | | -819.48 | -819.48 |
| | ABT Shelter Quote - Anchor Hardware and Templates; Includes: Steel Plate Template And Hardware For Cast In Place Anchoring System. | 1 | | 754.13 | 754.13T |
| | Discount based on Clay County #18/19-2, -5% on SRP Shelters Products | | | -37.71 | -37.71 |
| | Optional: Superior Recreational Products - Customized Powder Coating | 1 | | 3,187.05 | 3,187.05T |
| | Surcharge | | | 653.00 | 653.00T |
| | Engineered Drawings | 1 | | 1,400.00 | 1,400.00 |
| | Freight - Shelter | 1 | | 3,765.00 | 3,765.00 |

100% Financing Available – Flexible Terms
Ask Your ARC Sales Representative For More Information

| | |
|---|---|
| **Subtotal** | $25,291.62 |
| **Sales Tax (0.0%)** | $0.00 |
| **Total** | $25,291.62 |

Signature _____ Print Name/Title _____ Date _____ P.O. # _____

**Upon acceptance of this proposal please sign above and initial the 'ARC Site Preparation Check List' and the 'ARC General Terms and Conditions' exhibits attached. Please return initialed copies to ARC.**

**BOARD OF COUNTY COMMISSIONERS OF CLAY COUNTY, FLORIDA**

**NOTICE OF INTENT TO AWARD BID**

**RFP NO 18/19-2, Various Equipment and Amenities for Parks and Playgrounds**

In accordance with the provisions of Section 8.N of the Clay County Purchasing Policy, notice is hereby given and posted of the decision of the Board of County Commissioners of Clay County, Florida (hereinafter the "Board") with respect to RFP No. 18/19-2, Various Equipment and Amenities for Parks and Playgrounds. Responses to RFP No. 18/19-2 were opened on March 19, 2019. During its regular meeting on May 28, 2019, the Board rendered its decision to award RFP No. 18/19-2 to multiple companies. This notice of intent to award bid is the official notification regarding said selection. The decision of the Board is final subject to 72 hour period for protest. Failure to file a protest within the time prescribed in Section 8.N of the Clay County Purchasing Policies shall constitute a waiver of proceedings under Section 8.N Bid Awards and Protests.

Lorin L. Mock
Acting County Manager

| Date of Posting: | Date of Removal: |
|---|---|
| 5/29/19 | 6/3/19 |
| Time of Posting: | Time of Removal: |
| 8:45 a.m. | 8:47 a.m. |
| Initials: | Initials: |
| D F | D F |

**BID FORM**
**RFP No. 18/19-2, VARIOUS EQUIPMENT AND AMENITIES FOR PARKS AND PLAYGROUNDS**

Bidder: Advanced Recreational Concepts

Address: 3125 Skyway Cir

City, State and Zip: Melbourne, FL 32934

Phone: 321-775-0600 Email: info@arcflorida.com

Contact Name(s): Paul Bickham

Paul Bick

Signature of Bidder

*Bidder can provide additional price information related to Ball Field Lighting

MANUFACTURER CATALOGS:

Manufacturer: Playcraft Systems

Fixed Percentage Discount off MSRP: 2%

Installation (Fixed Percentage of cost after discounts of equipment): 37%

Manufacturer: Dynamo

Fixed Percentage Discount off MSRP: 2%

Installation (Fixed Percentage of cost after discounts of equipment): 37%

Manufacturer: SRP R3

Fixed Percentage Discount off MSRP: 2%

Installation (Fixed Percentage of cost after discounts of equipment): 37%

Manufacturer: Freenotes Harmony

Fixed Percentage Discount off MSRP: 2%

Installation (Fixed Percentage of cost after discounts of equipment): 37%

**(MULTIPLE SHEETS CAN BE USED)**

**BID FORM**
**RFP No. 18/19-2, VARIOUS EQUIPMENT AND AMENITIES FOR PARKS AND PLAYGROUNDS**

Bidder: Advanced Recreational Concepts

Address: 3125 Skyway Cir

City, State and Zip: Melbourne, FL 32934

Phone: 321-775-0600 Email: info@arcflorida.com

Contact Name(s): Paul Bickham

Paul Bickham
Signature of Bidder

*Bidder can provide additional price information related to Ball Field Lighting

MANUFACTURER CATALOGS:

Manufacturer: Id Sculptures

Fixed Percentage Discount off MSRP: 2%

Installation (Fixed Percentage of cost after discounts of equipment): 60%

Manufacturer: Childforms

Fixed Percentage Discount off MSRP: 2%

Installation (Fixed Percentage of cost after discounts of equipment): 37%

Manufacturer: Ultraplay

Fixed Percentage Discount off MSRP: 2%

Installation (Fixed Percentage of cost after discounts of equipment): 37%

Manufacturer: Rubber Designs

Fixed Percentage Discount off MSRP: 5%

Installation (Fixed Percentage of cost after discounts of equipment): 5%

**(MULTIPLE SHEETS CAN BE USED)**

**BID FORM**
**RFP No. 18/19-2, VARIOUS EQUIPMENT AND AMENITIES FOR PARKS AND PLAYGROUNDS**

Bidder: Advanced Recreational Concepts

Address: 3125 Skyway Cir

City, State and Zip: Melbourne, FL 32934

Phone: 321-775-0600 Email: info@arcflorida.com

Contact Name(s): Paul Bickham

Paul Bickham
Signature of Bidder

*Bidder can provide additional price information related to Ball Field Lighting

MANUFACTURER CATALOGS:

Manufacturer: SRP Shade

Fixed Percentage Discount off MSRP: 5%

Installation (Fixed Percentage of cost after discounts of equipment): 49%(concrete and footer not incd)

Manufacturer: Ultra Shade

Fixed Percentage Discount off MSRP: 5%

Installation (Fixed Percentage of cost after discounts of equipment): 49%(concrete and footer not incd)

Manufacturer: Icon Shelters

Fixed Percentage Discount off MSRP: 5%

Installation (Fixed Percentage of cost after discounts of equipment): 69%(concreteand footer not included)

Manufacturer: SRP Shelters

Fixed Percentage Discount off MSRP: 5%

Installation (Fixed Percentage of cost after discounts of equipment): 69%(concrete and footer not included)

**(MULTIPLE SHEETS CAN BE USED)**

**BID FORM**
**RFP No. 18/19-2, VARIOUS EQUIPMENT AND AMENITIES FOR PARKS AND PLAYGROUNDS**

Bidder: Advanced Recreational Concepts

Address: 3125 Skyway Cir

City, State and Zip: Melbourne, FL 32934

Phone: 321-775-0600 Email: info@arcflorida.com

Contact Name(s): Paul Bickham

Paul Bickham
Signature of Bidder

*Bidder can provide additional price information related to Ball Field Lighting

MANUFACTURER CATALOGS:

Manufacturer: SRP Amenities

Fixed Percentage Discount off MSRP: 2%

Installation (Fixed Percentage of cost after discounts of equipment): 75%

Manufacturer: Bison Amenities

Fixed Percentage Discount off MSRP: 2%

Installation (Fixed Percentage of cost after discounts of equipment): 75%

Manufacturer: Playcraft Amenities

Fixed Percentage Discount off MSRP: 2%

Installation (Fixed Percentage of cost after discounts of equipment): 75%

Manufacturer: Ultrasite Amenities

Fixed Percentage Discount off MSRP: 2%

Installation (Fixed Percentage of cost after discounts of equipment): 75%

**(MULTIPLE SHEETS CAN BE USED)**

**BID FORM**
**RFP No. 18/19-2, VARIOUS EQUIPMENT AND AMENITIES FOR PARKS AND PLAYGROUNDS**

Bidder: Advanced Recreational Concepts

Address: 3125 Skyway Cir

City, State and Zip: Melbourne, FL 32934

Phone: 321-775-0600 Email: info@arcflorida.com

Contact Name(s): Paul Bickham

Paul Bick
Signature of Bidder

*Bidder can provide additional price information related to Ball Field Lighting

MANUFACTURER CATALOGS:

Manufacturer: Park Catalog/Highlands Amenities

Fixed Percentage Discount off MSRP: 2%

Installation (Fixed Percentage of cost after discounts of equipment): 75%

Manufacturer: Paris Amenities

Fixed Percentage Discount off MSRP: 2%

Installation (Fixed Percentage of cost after discounts of equipment): 75%

Manufacturer: Kay Park Amenities

Fixed Percentage Discount off MSRP: 2%

Installation (Fixed Percentage of cost after discounts of equipment): 75%

Manufacturer: Boling Forest Mulch 4 You and Inovative Mulch

Fixed Percentage Discount off MSRP: 5%

Installation (Fixed Percentage of cost after discounts of equipment): 75%

**(MULTIPLE SHEETS CAN BE USED)**

**BID FORM**
**RFP No. 18/19-2, VARIOUS EQUIPMENT AND AMENITIES FOR PARKS AND PLAYGROUNDS**

Bidder: Advanced Recreational Concepts

Address: 3125 Skyway Cir

City, State and Zip: Melbourne, FL 32934

Phone: 321-775-0600 Email: info@arcflorida.com

Contact Name(s): Paul Bickham

Signature of Bidder

*Bidder can provide additional price information related to Ball Field Lighting

MANUFACTURER CATALOGS:

Manufacturer: Sports Play

Fixed Percentage Discount off MSRP: 3%

Installation (Fixed Percentage of cost after discounts of equipment): 75%

Manufacturer: Bison Sports

Fixed Percentage Discount off MSRP: 3%

Installation (Fixed Percentage of cost after discounts of equipment): 75%

Manufacturer: Action Fit

Fixed Percentage Discount off MSRP: 3%

Installation (Fixed Percentage of cost after discounts of equipment): 75%

Manufacturer: Water Splash

Fixed Percentage Discount off MSRP: 2%

Installation (Fixed Percentage of cost after discounts of equipment): 75%

**(MULTIPLE SHEETS CAN BE USED)**

**BID FORM**
**RFP No. 18/19-2, VARIOUS EQUIPMENT AND AMENITIES FOR PARKS AND PLAYGROUNDS**

Bidder: Advanced Recreational Concepts

Address: 3125 Skyway Cir

City, State and Zip: Melbourne, FL 32934

Phone: 321-775-0600 Email: info@arcflorida.com

Contact Name(s): Paul Bickham

Signature of Bidder

*Bidder can provide additional price information related to Ball Field Lighting

MANUFACTURER CATALOGS:

Manufacturer: Polysoft Surfacing

Fixed Percentage Discount off MSRP: 2%

Installation (Fixed Percentage of cost after discounts of equipment): 75%

Manufacturer: Paris Outdoor Fitness

Fixed Percentage Discount off MSRP: 3%

Installation (Fixed Percentage of cost after discounts of equipment): 75%

Manufacturer: Jay Pro

Fixed Percentage Discount off MSRP: 3%

Installation (Fixed Percentage of cost after discounts of equipment): 75%

Manufacturer: GT Grandstands

Fixed Percentage Discount off MSRP: 3%

Installation (Fixed Percentage of cost after discounts of equipment): 75%

**(MULTIPLE SHEETS CAN BE USED)**

**BID FORM**
**RFP No. 18/19-2, VARIOUS EQUIPMENT AND AMENITIES FOR PARKS AND PLAYGROUNDS**

Bidder: Advanced Recreational Concepts

Address: 3125 Skyway Cir

City, State and Zip: Melbourne, FL 32934

Phone: 321-775-0600 Email: info@arcflorida.com

Contact Name(s): Paul Bickham

Signature of Bidder

*Bidder can provide additional price information related to Ball Field Lighting

MANUFACTURER CATALOGS:

Manufacturer: Cedar Forest

Fixed Percentage Discount off MSRP: 5%

Installation (Fixed Percentage of cost after discounts of equipment): 69%(concrete and footers not incld)

Manufacturer: Playspace Services - Installation Services

Fixed Percentage Discount off MSRP: _____

Installation (Fixed Percentage of cost after discounts of equipment): Per Discount Catalog

Manufacturer: _____

Fixed Percentage Discount off MSRP: _____

Installation (Fixed Percentage of cost after discounts of equipment): _____

Manufacturer: _____

Fixed Percentage Discount off MSRP: _____

Installation (Fixed Percentage of cost after discounts of equipment): _____

**(MULTIPLE SHEETS CAN BE USED)**

# BOARD OF COUNTY COMMISSIONERS
# CLAY COUNTY, FLORIDA

## RFP NO. 18/19-2, VARIOUS EQUIPMENT AND AMENITIES FOR PARKS AND PLAYGROUNDS

**DUE DATE: Monday, March 18, 2019- 4:00 p.m.**
**OPEN DATE: Tuesday, March 19, 2019 -1:00 p.m.**

**Issued By:**
**Clay County Board of County Commissioners**
**Purchasing Department**

## TABLE OF CONTENTS

## RFP No. 18/19-2, VARIOUS EQUIPMENT AND AMENITIES FOR PARKS AND PLAYGROUNDS


Request for Proposal Advertisement ..... 3-5
Request for Proposal Instructions ..... 6-12
Specifications..... 13-17
Bid Forms ..... 18-20
Sample Quote Sheet.....21
Corporate Details.....22
Certification Regarding Debarment.....23
Scrutinized Companies Certification.....24
No Bid Statement.....25
Procedures for Bid Opening ..... 26-37


Attachments:
Form W-9

## REQUEST FOR PROPOSAL NOTICE

NOTICE IS HEREBY GIVEN that sealed proposals will be received until 4:00 P.M., Monday, March 18, 2019, at the Clay County Administration Building, Fourth Floor, Reception Area, 477 Houston Street, Green Cove Springs, Florida 32043, for the following:

## RFP No. 18/19-2, VARIOUS EQUIPMENT AND AMENITIES FOR PARKS AND PLAYGROUNDS

Proposals will be opened at 1:00 P.M., or as soon thereafter as possible, on Tuesday, March 19, 2019 in the Clay County Administration Building, Conference Room "B", Fourth Floor, 477 Houston Street, Green Cove Springs, Florida, in the presence of the Purchasing Department staff and all other interested persons.

The opened Proposals will be read aloud, examined for conformance to specifications, tabulated, and preserved in the custody of the Purchasing Department. Proposals submitted will be evaluated by the Finance and Audit Committee. The Finance and Audit Committee of the Board will present its recommendation to the Board of County Commissioners as soon thereafter as possible. At the discretion of the Board of County Commissioners or the Finance and Audit Committee, companies submitting proposals may be requested to make oral presentations as part of the evaluation process.

Proposals will not be valid unless received by the proposal deadline and in a sealed envelope marked "**RFP No. 18/19-2, VARIOUS EQUIPMENT AND AMENITIES FOR PARKS AND PLAYGROUNDS"** to be received until 4:00 P.M., Monday, March 18, 2019. Envelopes are to be submitted in person or delivered by courier to the above address. No postal mail will be accepted.

During the bidding process, all prospective proposers are hereby prohibited from contacting (i) any member of the Board of County Commissioners, the County Manager or any County employee or agent regarding the solicitation in any respect during the solicitation period, and (ii) the County Manager or any County employee or agent regarding the solicitation in any respect during the evaluation period. The violation of this rule shall result in the automatic disqualification of any response to a bid solicitation submitted by the violator (as specified in Section P of Chapter 8 of the Purchasing Manual attached hereto). The no-contact rule set forth shall not apply to inquiries submitted to County employees or agents in the manner specifically provided in the bid solicitation package regarding the distribution thereof, or to communications seeking clarification regarding instructions or specifications submitted to County employees or agents in the manner specifically provided for in the bid solicitation package, or to pre-bid conferences provided for in the bid solicitation package, or to formal presentations by finalists to the Board of County Commissioners or any committee thereof specifically contemplated in the bid solicitation package. For information concerning procedures for responding to this Bid, contact the Purchasing Department, Donna Fish by email purchasing@claycountygov.com or at (904) 278-3761.

The County reserves the right to waive formalities in any response, to reject any or all responses with or without cause, to waive technical and non-technical or non-material defects in the solicitation or submittal of any responses, including the lack of availability of adequate funds, regulatory agency requirements, to make award in part or completely, and/or to accept the response that, in its judgment, will be in the best interest of the County of Clay. Bid proposals in which the prices obviously are unbalanced will be rejected.

**FOLLOWING THE BID OPENING AND TABULATION, A "NOTICE OF INTENT TO AWARD BID" OR A "NOTICE OF REJECTION OF ALL BIDS" WILL BE POSTED ON THE INTERNET AT:** http://www.claycountygov.com/departments/purchasing-division/bcc-bid-tabs-current-bids-intent-bids-rejection-bids. **THIS WEB PAGE CAN ALSO BE ACCESSED FROM THE HOMEPAGE OF THE COUNTY'S WEBSITE AT:** www.claycountygov.com **BY FOLLOWING THE "NOTICE OF INTENT BIDS" LINK UNDER THE "BUSINESS" ROLLOVER BUTTON ON THE COUNTY'S HOMEPAGE. NO OTHER NOTICE WILL BE POSTED.**

**PROSPECTIVE BIDDERS ARE NOTIFIED THAT THE FAILURE TO INCLUDE WITHIN THE SEALED BID ENVELOPE A PROPER BID BOND OR OTHER SECURITY APPROVED UNDER THE COUNTY'S PURCHASING POLICY, OR THE FAILURE TO FILE A WRITTEN PETITION INITIATING A FORMAL PROTEST PROCEEDING WITHIN THE TIMES AND IN THE MANNER PRESCRIBED IN SECTION 8. (N), OF SAID POLICY, SHALL CONSTITUTE A WAIVER OF THE RIGHT TO PROTEST THE BID SOLICITATION, ANY ADDENDUM THERETO, OR THE BID DECISION, AS APPLICABLE, AND TO INITIATE A FORMAL PROTEST PROCEEDING UNDER SAID POLICY. THE COUNTY'S PURCHASING POLICY CAN BE VIEWED AT THE COUNTY'S WEBSITE BY FOLLOWING THE APPROPRIATE LINKS FROM THE HOMEPAGE ADDRESS SET FORTH ABOVE.**

A person or affiliate who has been placed on the convicted bidder list following a conviction for a public entity crime may not submit a bid on a contract to provide any goods or services to a public entity, may not submit a bid on a contract with a public entity for the construction or repair of a public building or public work, may not submit bids on leases of real property to a public entity, may not be awarded or perform work as a contractor, supplier, subcontractor, or consultant under a contract with any public entity, and may not transact business with any public entity in excess of the threshold amount provided in Section 287.017, Florida Statutes, for CATEGORY TWO for a period of 36 months from the date of being placed on the convicted bidder list.

----------END OF NOTICE----------

## BID ADVERTISEMENTS SCHEDULE

**RFP No. 18/19-2, VARIOUS EQUIPMENT AND AMENITIES FOR PARKS AND PLAYGROUNDS**

**(CLAY TODAY)** For publication on: **February 14, 2019**

**(CLAY COUNTY WEBSITE)** For: **February 14, 2019**

**PLEASE SEND ORIGINAL INVOICE AND PROOF OF PUBLICATION TO:**

Clay County Board of County Commissioners
**Purchasing Department**
477 Houston Street
Green Cove Springs, Florida 32043
ATTENTION: Donna Fish

Lorin L. Mock
Acting County Manager

# REQUEST FOR PROPOSAL INSTRUCTIONS

## RFP No. 18/19-2, VARIOUS EQUIPMENT AND AMENITIES FOR PARKS AND PLAYGROUNDS

1. **Delivery and Receipt of Bids:** All sealed Proposals submitted shall be received by the Purchasing Department of Clay County, Florida.

   Proposals submitted in person or by courier services will be received at:
   Clay County Administrative Building
   Fourth Floor, Reception Area
   477 Houston Street, Green Cove Springs, Florida 32043

Three copies of the Proposal must be received in a sealed envelope. Proof of liability insurance, form W-9 taxpayer identification number, and bid information shall be included with all responses submitted.

The words "**RFP No. 18/19-2, VARIOUS EQUIPMENT AND AMENITIES FOR PARKS AND PLAYGROUNDS"** shall be clearly marked on the front and back of the envelope containing the Proposal.

2. **Due Date and Opening Date:** Proposals will be received by carrier or in person until Monday, March 18, 2019 at 4:00 p.m. and will be opened on Tuesday, March 19, 2019 at 1:00 p.m. or soon thereafter, in the Clay County Administration Building, 477 Houston Street, Conference Room "B", Fourth Floor, Green Cove Springs, Florida. Bids will be reviewed by Clay County as soon thereafter as possible.

   A. All Proposals will be "clocked" at the time they are received to indicate the time and date of receipt.
   B. Proposals WILL NOT be accepted in person after the time and date specified.
   C. Proposals received by carrier WILL NOT be accepted if they are received after the time and date specified regardless of the circumstances.
   D. No postal mail will be accepted.

3. **Withdrawal of RFP:** Proposals may be withdrawn by a written or faxed request by the Bidder and received by the Purchasing Department before the date and time for receiving Proposals has expired. Negligence on the part of the Bidder in preparing a Proposal is not grounds for withdrawal or modification of a Proposal after such Proposal has been opened by the County. Bidders may not withdraw or modify a Proposal after the appointed Bid Opening. Bidders may not assign or otherwise transfer their Proposals.

4. **Inquiries/Questions:** Any questions regarding this RFP must be directed to **Donna Fish** (the authorized contact person) via email at purchasing@claycountygov.com (preferred method) or by calling (904) 278-3761. Written inquiries/questions must be received by **March 6, 2019**. Responses to questions, clarifications, and addenda will be distributed to potential Bidders by email. It is the responsibility of interested Bidders to verify if this information has been issued prior to submitting a Bid.

5. **No Contact Period:** During the Bidding process, all prospective Bidders are hereby prohibited from contacting (1) any member of the Board of County Commissioners, the County Manager or any County employee or agent regarding the solicitation in any respect during the solicitation period, and (2) the County Manager or any County employee or agent regarding the solicitation in any respect during the evaluation period. The violation of this rule shall result in the automatic disqualification of any Bid submitted by the violator, as specified in Section P of Chapter 8 of the Clay County Purchasing Manual. **Exceptions:** The no-contact rule set forth shall not apply to inquiries submitted to the authorized contact person, the pre-bid conference, or to formal presentations by finalists to the Board of County Commissioners or to the County's evaluation committee.

6. **Additional Evaluation:** The County reserves the right to request any additional information from Bidders after Bid Opening and before award as may be necessary to assist in review and evaluation of any Bid prior to submittal of a recommendation for award to the Board of County Commissioners.

7. **Award:** The Bid will be awarded to the responsible Bidder(s) submitting a Bid determined to provide the best value to the County with price, technical, and other applicable factors considered. The County reserves the right to award to multiple bidders.

8. **Waiver of Formalities/Rejection of Bids:** The County reserves the right to waive formalities in any Bid, to reject any or all Bids with or without cause, to waive irregularities/technicalities, and waive technical and non-technical or non-material defects in the Bid document or submittal of any Bid. The County reserves the right to make award either in part or completely, and/or to accept the Bid that, in its judgment, will be in the best interest of the County. Bids in which the prices obviously are unbalanced will be rejected. The County reserves the right to reject any and all Bids and to re-advertise for all or any part of this solicitation as deemed in its best interest.

9. **Cancellation of Bid:** Clay County reserves the right to cancel a solicitation at any time prior to approval of the award. The decision to cancel a solicitation cannot be the basis for a protest under the formal protest process as referenced herein.

10. **No Bid:** Each company not intending to respond to this Bid should reply with a written "No Bid Statement". Such action will maintain the company on the appropriate active Bidder solicitation list. Three (3) failures to respond to solicitations may result in deletion from the Bidder solicitation list.

11. **Bid Errors:** Where Bid forms have erasures or corrections, each erasure or correction must be initialed in ink by the Bidder. In case of unit price Bid items, if an error is committed in the extension of an item, the unit price as shown in the Bid response will govern. Errors between any sum, computed by the Bidder, and the correct sum thereof will be resolved in favor of the correct sum. Any discrepancy between words and numbers will be resolved in favor of the written words.

12. **Deviations:** Bidders are hereby advised the County will only consider Bids that meet the specifications and other requirements imposed upon them by this Bid document. In instances where a deviation is stated in the Bid Form, said Bid will be subject to rejection by the County in recognition of the fact that said Bid does not meet the exact requirements imposed upon the Bidder by the Bid or Contract documents.

13. **Bid Protests:** Any company affected adversely by the County's decision may file with the County Purchasing Department a "Notice of Protest" in writing within 72 hours after the posting of the recommended award. Failure to file a written Notice of Protest shall constitute a waiver of proceedings under Chapter 8 (N) of the Clay County Purchasing Policies. Failure to file a written petition initiating a formal protest proceeding within the time frame and in the manner prescribed in Section 8 (N) of said policy shall constitute a waiver of the right to protest the Bid solicitation, any addendum thereto, or the Bid award recommendation or decision, and to initiate a formal protest proceeding under said policy. The County's Purchasing Policy may be viewed at the County's website by following the appropriate links from the Homepage.

14. **Public Entity Crimes:** Pursuant to Section 287.133(2)(a) of the Florida Statutes, a person or affiliate who has been placed on the convicted vendor list following a conviction for a public entity crime may not submit a Bid for a Contract to provide any goods or services to a public entity, may not submit a Bid for a Contract with a public entity for the construction or repair of a public building or public work, may not submit Bids on leases of real property to a public entity, may not be awarded or perform work as a Contractor, supplier, subcontractor, or consultant under a Contract with any public entity, and may not transact business with any public entity in excess of the threshold amount provided in Section 287.017 of the Florida Statutes, for CATEGORY TWO for a period of 36 months from the date of being placed on the convicted vendor list. By submitting a Bid, Bidder attests that they have not been placed on the "Convicted Vendor List".

15. **Debarment:** By submitting a Proposal, the Bidder certifies that it is not currently debarred from submitting proposals for contracts issued by any political subdivision or agency of the State of Florida and that it is not an agent of a person or entity that is currently debarred from submitting proposals for contracts issued by any subdivision or agency of the State of Florida.

16. **Laws and Regulations:** The Bidder shall comply with all laws and regulations applicable to provide the goods and/or services specified in this solicitation. The Bidder shall be familiar with all federal, state and local laws that may affect the goods and/or services offered. All applicable Federal and State laws, municipal and Clay County ordinances, and the rules and regulations of all authorities having jurisdiction over any part of the project shall apply to the entire project and Contract.

17. **Scrutinized Companies Certification:** In compliance with subsection (5) of Section 287.135(5), Florida Statutes the Bidder certifies that the company is not participating in a boycott of Israel as defined in subsection (1) of the Statute; is not on the Scrutinized Companies with Activities in Sudan List or the Scrutinized Companies with Activities in the Iran Petroleum Energy Sector List as referred to in subsection (2) of the Statute; and does not have business operations in Cuba or Syria as defined in subsection (1) of the Statute. The included Scrutinized Companies Certification Form must be completed and returned as part of the bid submittal.

18. **Laws and Regulations:** The Bidder shall comply with all laws and regulations applicable to provide the goods and/or services specified in this solicitation. The Bidder shall be familiar with all federal, state and local laws that may affect the goods and/or services offered. All applicable Federal and State laws, municipal and Clay County ordinances, and the rules and regulations of all authorities having jurisdiction over any part of the project shall apply to the entire project and Contract.

19. **Copyright Restrictions:** Both the County seal and the County logo are being registered for a copyright. Neither the Clay County seal nor the logo may be used or provided to non-Clay County government users for use on company Bids, presentations, etc.

20. **Indemnification:** The awarded Bidder shall indemnify and hold harmless the County, and its officers and employees, from liabilities, damages, losses, and costs, including, but not limited to, reasonable attorneys' fees, to the extent caused by the negligence, recklessness, or intentionally wrongful conduct of the company and other persons employed or utilized by the company in the performance of the Contract. The provisions of Florida Statute 768.28 applicable to Clay County, Florida apply in full to this Contract. Any legal actions to recover monetary damages in tort for injury or loss of property, personal injury, or death caused by the negligent or wrongful act or omission of any employee of the County acting within the scope of his/her office or employment are subject to the limitations specified in this statute.

    No officer, employee or agent of the County acting within the scope of his/her employment or function shall be held personally liable in tort or named as a defendant in any action for any or damage suffered as a result of any act, event, or failure to act. The County shall not be liable in tort for the acts or omissions of an officer, employee, or agent committed while acting outside the course and scope of his/her employment. This exclusion includes actions committed in bad faith or with malicious purpose, or in a manner exhibiting wanton and willful disregard of human rights, safety, or property.

21. **Insurance Requirements:** Prior to commencement of the project, the awarded Bidder shall provide the County Purchasing Department with proof of the following insurance:

    a. Commercial General Liability

| | |
|---|---|
| 1. General Aggregate | $1,000,000 |
| 2. Products and Completed Operations Aggregate | $1,000,000 |
| 3. Personal and Advertising Injury | $1,000,000 |
| 4. Each Occurrence | $1,000,000 |
| 5. Fire Damage (any one fire) | $ 50,000 |
| 6. Medical Expense (any one person) | $ 5,000 |

    b. Automobile Liability

| | |
|---|---|
| 1. Any automobile-Combined bodily injury/property damage, with minimum limits for all additional coverages as required by Florida law | $1,000,000 |

    c. Workers Compensation/Employers Liability

| | |
|---|---|
| 1. Workers Compensation | statutory limits |
| 2. Employers Liability | |
| a. Each Accident | $ 100,000 |
| b. Disease-Policy | $ 500,000 |
| c. Disease-Each Employee | $ 100,000 |

    d. Professional Liability

| | |
|---|---|
| 1. When required by Contract-per occurrence | $ 1,000,000 |

The awarded Bidder must maintain insurance coverage at the above-prescribed levels through the date of completion of the project and such coverage must include all independent Contractors and Subcontractors. Either prior to, or simultaneously with the execution of the Contract, the awarded Bidder must deliver certificates of insurance for the required insurance coverage to the County naming "Clay County, a political subdivision of the State of Florida, the Board of County Commissioners, Clay County, Florida; and all public agencies of Clay County, as their interests may appear" as "Additional Insured." Said certificates of insurance shall also include a thirty-day prior written notice of cancellation, modification or non-renewal to be provided to the County.

22. **Performance and Payment Bond Requirements:** Performance and Payment Bonds are not required for projects of $200,000^{.00}$ or less. Prior to commencement of a project exceeding $200,000^{.00}$, the awarded Bidder shall file a 100% Performance Bond and Payment Bond (using Clay County's Standard Form) in the Public Record of Clay County, Florida, Recording Dept./Room 130, 825 North Orange Avenue, Green Cove Springs, Florida 32043. The recorded Performance and Payment Bonds shall be provided prior to the commencement of construction to Clay County Purchasing Department, PO Box 1366, Green Cove Springs, Florida 32043. Performance and Payment Bonds must be increased in accordance with any change order increases on the project.

23. **Bid Preparation Costs:** By submission of a Bid, the Bidder agrees that all costs associated with the preparation of his/her Bid will be the sole responsibility of the Bidder and shall not be borne by the County. The Bidder also agrees that the County bears no responsibility for any costs associated with the preparation of their Bid and/or any administrative or judicial proceedings resulting from the solicitation process.

24. **Business Registration Requirement:** In accordance with Chapters 605-623, Florida Statutes, in order to do business in the State of Florida, corporations (and other business designations) are required to be registered and in good standing with the Department of State, Division of Corporations. To be eligible to receive a contract and/or purchase order registration must be accomplished prior to the initial posting indicating intent to award to that vendor. Failure to be registered may be cause for disqualification. Contact the Division of Corporations at (850) 245-6000. Online-filing is available at: http://dos.myflorida.com/sunbiz

25. **Contractor Qualifications and Requirements:** At the time of Bid Opening, all Bidders must be certified or registered pursuant to Chapter 489, Florida Statutes, or hold a Clay County certification under Article III of Chapter 7 of the Clay County Code, as applicable, at the time of submitting a Bid. All Bidders must submit evidence of current state certification or registration, or County certification, as applicable, prior to award of this Bid.

    The following licensing requirements shall apply when the applicable Florida statute mandates specific licensing for Contractors engaged in the type of work covered by this solicitation.

    a. State of Florida, Department of Professional Regulation, Construction Industries Licensing Board and licensed by other federal, state, regional, county or municipal agencies having jurisdiction over the specified construction work.

    b. Said licenses shall be in the Bidder's name as it appears on the Bid Form. Bidder shall supply a copy of each applicable license showing the appropriate license numbers, with expiration

dates as required by the County. Failure to hold and provide proof of proper licensing, certification and registration may be grounds for rejection of the Bid and/or termination of the Contract.

c. Subcontractors Contracted by the Prime Contractor shall be licensed in their respective fields to obtain construction permits from the County. Said license must be in the name of the subcontractor.

The following licensing requirements shall apply when applicable (Contractor Prequalification):

Florida Law and Rules of the State of Florida, Department of Transportation, require contractors to be prequalified with the Department in order to bid for the performance of road, bridge, or public transportation construction contracts greater than $250,000.00. The Contractor Prequalification process results in the issuance of a Certificate of Qualification for each successful applicant which lists the approved work classes and the Maximum Capacity Rating in dollars. It is the responsibility of potential bidders to review the requirement and meet the qualifications listed at: http://www.dot.state.fl.us/cc-admin/PreQual_Info/prequalified.shtm. Contractors not meeting the applicable work types associated with the scope of the work may utilize subcontractors to assist with meeting the requirement of all necessary prequalification work classes.

26. **Qualification:** The County shall have the right to review the references, experience of assigned personnel, and qualifications of the Contractor in order to make the final determination of acceptability of the Contractor to be awarded the Contract and construct the work.

The Board of County Commissioners may reject, at its sole discretion, any Bidder the Commission finds to lack, or who's present or former executive employees, officers, directors, stockholders, partners or owners are found by the Commission to lack honesty, integrity, or moral responsibility. The Commission's finding may be based on any of the following factors: the disclosure required herein, the County's own investigation, public records, or any other reliable source of information. The Commission may also reject any Bidder failing to make the disclosure required herein. By submitting a Bid, Bidder recognizes and accepts that the Board of County Commissioners may reject any Bid at its sole discretion and the Bidder waives any claim it might have for damages or other relief arising from the rejection of its Bid or resulting directly or indirectly from the rejection of its Bid based on these grounds or from the disclosure of any pertinent information relating to the reasons for rejection of its Bid.

27. **Subcontractors:** The County reserves the right to approve all Subcontractors for this Contract. If Subcontractors are to be utilized, their names and references must be included within this Bid. Responsibility for the performance of the Contract remains with the main Contractor exclusively. After the commencement of the project, subcontractors may be added or modified during the Contract period only with prior written permission from the County, and only for reasonable cause, as judged by the County.

28. **Interpretation of Plans and Specifications:** No interpretation of the meaning of the plans, specifications, or other Contract documents will be made to any Bidder orally. Every request for interpretation should be in writing addressed to the Purchasing Department. To be given consideration, such requests must be received no later than **March 6, 2019.**

Any and all such interpretations and any supplemental instructions will be in the form of a written addendum. All Addenda issued shall become part of the Bid and Contract documents, and receipt must be acknowledged on the Bid Form, by completion of the applicable information on the Addendum, and submitting it with the Bid. Failure to acknowledge Addenda which have no effect on the competitive nature of the bidding process may be a waiveable deviation at the County's sole discretion.

29. **Conflict of Interest:** The award hereunder is subject to Chapter 112, Florida Statutes. All proposers must disclose with their Proposal, any personal or organizational conflicts of interest pursuant to Section 112.313, Florida Statutes, the name of any officer, director, or agent who is also an employee of the Clay County Board of County Commissioners. Further, all proposers must disclose the name of any Clay County Board of County Commissioners employee who owns, directly or indirectly, an interest of the proposer's firm or any of its branches.

30. **Use of Contract by Other Government Agencies:** At the option of the Bidder, the use of the Contract resulting from this solicitation may be extended to other governmental agencies, including the State of Florida, its agencies, political subdivisions, counties, and cities.

    Each governmental agency allowed by the Bidder to use this Contract shall do so independent of any other governmental entity. Each agency shall be responsible for its own purchases and shall be liable only for goods or services ordered, received and accepted. No agency receives any liability by virtue of this bid and subsequent contract award.

31. **Execution of Contract and Notice to Proceed:** The awarded Bidder may be required to sign a written Contract. Said Contract will evidence in written form the agreement between the parties.

32. All payments made under this Bid will be made in accordance with the Local Government Prompt Payment Act; in effect, not later than 45 days from receipt of proper invoice.

33. At the discretion of the Board of County Commissioners any Committee contemplated herein, Vendors submitting proposals may be requested to make oral presentations as part of the evaluation process.

**RFP No. 18/19-2, VARIOUS EQUIPMENT AND AMENITIES FOR PARKS AND PLAYGROUNDS – SCOPE OF SERVICES**
**(Provided by Parks and Recreation Department)**

## SCOPE:

The purpose of this bid invitation:

1. Establish a firm, fixed percentage discount from manufacturer's and/or bidder's current catalog/supply/product information price list for the purchase of various equipment and amenities for parks and playgrounds as requested by the Clay County Division of Parks and Recreation. The County reserves the right to award to multiple bidders.
2. Establish a firm, fixed percentage of manufacturer's and/or bidder's current catalog/supply/product information price list, after applying the above requested discount for purchase, for the installation of various equipment and amenities. It is understood that bidder's current catalog/supply/product information price list are subject to change; however, percentages shall remain fixed. No extra charges or compensation will be allowed for installation above and beyond what has already been presented in your bid. If the bidder offers specialized catalogs, the catalogs must be submitted separately from any other catalog offered by the bidder.
3. This bid is also a means for qualifying vendors for ball park lighting services. Qualifying vendors will be requested to provide pricing on a project by project basis as defined in the method of ordering section of this bid utilizing prices provided in bid response. The qualified vendor(s) providing the lowest responsive quote will be awarded the project.
4. There is no guarantee any purchases will be made after award. Purchase orders will be issued subject to availability of funds.

## RESPONSIBILITY:

Bidder shall be responsible for all labor, materials, equipment, supervision, off-loading, storage, and installation, of various equipment and amenities for parks and playground equipment or amenities ordered, unless otherwise specified by the County. The County may elect, in certain circumstances, to purchase only materials and have those materials installed by others (e.g., volunteers, County staff). These items will be shipped to a designated location and off-loaded by the bidder or bidder's representative.

## QUALIFICATION OF INSTALLERS:

If a bidder utilizes a sub-contracted installer for any park or playground equipment, a list of sub-contracted installers must be included with their bid. Additionally, the bidder must supply WRITTEN FACTORY/MANUFACTURER CERTIFICATION that its installer, or its sub-contracted installer, is an authorized installer, certified to install various equipment and amenities for parks and playground equipment as required by each manufacturer.

## CATALOGS AND MANUFACTURER SUGGESTED RETAIL PRICE (MSRP) LISTS:

Each bidder shall submit with this bid, at no charge, two (2) sets of each current catalog/supply/product information price list as well as current MSRP list for each catalog

submitted. All catalogs and/or MSRP lists shall clearly identify bidder's name, address and telephone number.

The vendor shall supply at no charge, two (2) sets of each then current catalog/supply/product information price list as well as current MSRP list for each catalog submitted upon price changes. At renewal time Vendor may request that new manufacturers be added. County reserves the right to approve or deny this request.

**COMPLIANCE WITH LAWS AND CODES**:

Bidders must strictly comply with Federal, State and local building and safety codes. Equipment must meet all State and Federal safety regulations. The following publications (issue in effect on date of invitation to bid) shall form a part of this specification:

A. American Society for Testing and Materials (ASTM):

ASTM-F1487 Standards – Methods of testing Playground Equipment for Public Use.

ASTM-F1292 Standards - Method for testing various surfacing materials to determine their "critical height" (the fall height below which a life threatening head injury would not be expected to occur)

Copies may be obtained from the - American Society for Testing and Materials
100 Barr Harbor Drive
West Conshohocken, PA 19428

B. Consumer Product Safety Commission (CPSC) – printed Handbook for Public Playground Safety.

Copies may be obtained from the - US Consumer Product Safety Commission
4330 East West Highway
Bethesda, MD 20814
(301) 504-7923

C. National Playground Safety Institute (NPSI) – identification of 12 leading causes of injuries on playgrounds.

Copies may be obtained from the - National Recreation and Park Association
22377 Belmont Ridge Road
Ashburn, VA 20148-4150
(703) 858-0784

D. Americans with Disabilities Act (ADA) Regulations for Title III, Appendix A, Standards for Accessible Design, issued by the Department of Justice.

Copies may be obtained by calling: (800) 514-0301

Bidders certify that all products (materials, equipment, processes, age appropriate signage, or other items supplied in response to this bid) contained in its bid meet all Federal and State requirements, **Upon completion of installation of play equipment and/or playground surfacing, bidder shall furnish to the County a certificate so stating the equipment /surfacing and its installation meet all Federal and State requirements as outlined in the above publications.**

Bidders further certify that if the product(s) delivered and/or installed are subsequently found to be deficient in any of the aforementioned requirements in effect on date of delivery, all costs necessary to bring the product(s) and installation into compliance shall be borne by the bidder.

## INVOICING:

Invoices may be issued once equipment, materials, and supplies are delivered and/or installed to the county's satisfaction. At a minimum, invoices must include: Purchase Order Number, Item Number and Description, Date of Shipment, Quantity Ordered, Unit Price, Unit of Measure, and a total for all purchases. Standard payment terms are Net 45 days per the Local Government Prompt Payment Act.

## TERMS OF CONTRACT:

The term of bid award for various equipment and amenities for parks and playgrounds will be three (3) years, with two (2) one (1) year renewal options. Discounts from this solicitation shall prevail for the full duration of the contract and including subsequent extensions. County reserves the right to use other available bids or contracts when in the best interest of the County.

## METHOD OF ORDERING:

The County may generate a Request for Quotation, on an "as needed" basis, for park and playground equipment and/or ball field lighting together with a request for additional services required to complete that project (see attached Quote sample sheet). The County reserves the right to send such Request for Quotation to any or all awarded bidders. The Request for Quotation can define the project exactly or the Request for Quotation can describe a desired end result, allowing the bidder to design the park or playground site.

After generating a Request for Quotation for a project, and before bidder's submission of its quotation in response to the Request for Quotation, the County may require requested bidder (s) to attend a site visit with County personnel to familiarize the bidder(s) with the site and determine additional services that may be required to complete the project. Bidders will be responsible for the accuracy of all fixed measurements.

The bidder's quotation in response to the Request for Quotation must contain each of the following:

- A detailed breakdown of the cost for the entire project. Descriptions of additional services related to the project, together with their price, shall also be listed.
- Include Catalog Name, Number and associated discount. When quoting projects where freight would be charged, those costs must be included in quote so freight charges can appear on the purchase order. Freight charges for equipment must be pre-paid and added to the invoice.
- Names of any and all subcontractors on the project. It is understood the bidder remains responsible for project completion and acceptance by the County. The County reserves the right to reject any quotation in response to a Request for Quotation if said quotation names a subcontractor who has, in the sole opinion of the County, previously failed in the proper performance of an award or failed to deliver on time contracts of a similar nature, or who is not in a position to perform properly under this award.
- Project Completion Date.
- Include an updated catalog, if needed and updated MSRP lists for the park and play equipment specifically quoted.

The County will generate purchase orders as a result of approved "Request for Quotations" submitted, at the sole discretion of the County. The County reserves the right to not award to any, or to use other available bids or contracts when in the best interest of the County.

**PROMOTIONAL PRICING:**

During the contract period, bidders shall extend any pricing offered on a "promotional" basis from the manufacturer to the county. It will be the bidder's responsibility to monitor said items and report any that are or will be offered at lower prices.

**SUPERVISION:**

A bidder's job supervisor/representative shall be on the work site at all times and be thoroughly knowledgeable of the materials, job requirements, plans, specifications and installation functions. Contractors shall be responsible for the appearance of all working personnel assigned to the project (clean and appropriately dressed at all times).

**JOB COMPLETION:**

Bidder/installer shall be responsible for all materials received and signed for from date of order to completion of job installation.

Bidder/installer shall be responsible for cleanup and removal of all debris resulting in job completion.

Bidder/installer shall be responsible for restoring the work site to its original condition at the completion of the project. This shall include re-sodding of the area affected by their work with sod which is of the same variety and quality as the surrounding sod. Where no sod exists prior to installation, the contractor shall restore grade to a level consistent with the surrounding grade.

## RESPONSIBILITY FOR DAMAGES AND PRESERVATION OF PROPERTY:

The bidder shall use due care to avoid damaging all property associated with, adjacent to, or in any way affected by the work being performed. The bidder shall be responsible for the protection of all buildings, structures, and utilities that are underground, above ground, or on the surface from their operations that may be hazardous and/or damaging to said facilities. Bidder shall leave work site in a neat and orderly fashion at the end of each work day. Any damage occurring to such items by bidder shall be immediately repaired or replaced to a condition at least equal to that which existed prior to the damage. All costs incurred for repair or replacement shall be borne by the successful bidder. Any damages not repaired or replaced by the bidder within ten (10) calendar days from notification will be fixed by the County or its contractor and the cost shall be paid by the bidder or deducted from their invoice.

## VIOLATIONS/DEFAULT:

In the event the awarded bidder(s) should violate any provisions of this bid, such bidder will be given written notice stating the deficiencies and given ten (10) days to correct deficiencies found. The County reserves the right to terminate any bid, contract, or purchase order at any time due to any violation.

In the event the awarded bidder(s) should breach this contract, the County reserves the right to seek all remedies in law and/or in equity. Failure of an awarded bidder to adhere to completion dates defined by bidder and County may result in no further purchase being made with such bidder under this Bid.

**BID FORM**
**RFP No. 18/19-2, VARIOUS EQUIPMENT AND AMENITIES FOR PARKS AND PLAYGROUNDS**

Bidder:_____

Address:_____

City, State and Zip:_____

Phone:_____ Email:_____

Contact Name(s):_____

_____
Signature of Bidder

*Bidder can provide additional price information related to Ball Field Lighting

MANUFACTURER CATALOGS:

Manufacturer:_____

Fixed Percentage Discount off MSRP: _____

Installation (Fixed Percentage of cost after discounts of equipment): _____

Manufacturer:_____

Fixed Percentage Discount off MSRP: _____

Installation (Fixed Percentage of cost after discounts of equipment): _____

Manufacturer:_____

Fixed Percentage Discount off MSRP: _____

Installation (Fixed Percentage of cost after discounts of equipment): _____

Manufacturer:_____

Fixed Percentage Discount off MSRP: _____

Installation (Fixed Percentage of cost after discounts of equipment): _____

**(MULTIPLE SHEETS CAN BE USED)**

**RFP #18-19-2, Various Equipment And Amenities For Parks And Playgrounds**

SUB-CONTRACTOR EQUIPMENT INSTALLERS:

Business Name:_____

Address: _____

Phone Number: _____

Contact Name: _____

Business Name:_____

Address: _____

Phone Number: _____

Contact Name: _____

Business Name:_____

Address: _____

Phone Number: _____

Contact Name: _____

Note: Upon request bidders must supply WRITTEN CERTIFICATION (s) naming bidder, and/or each of its sub-contractor installer(s), as an authorized installer certified to install park and playground equipment as required by each manufacturer. Installers shall have a Certified National Playground Safety Inspector (NPSI) present during installations and repairs.

**(MULTIPLE SHEETS CAN BE USED)**

## WARRANTY INFORMATION FORM

MAKE AND MODEL OF EQUIPMENT PROPOSED: _____

Is there a warranty on the equipment proposed? _____ Yes _____ No

Does the warranty apply to **ALL** components or only part? (State Explicitly)

_____

_____

_____

Parts Warranty Period: _____ Service Warranty Period: _____

Nearest source for parts and/or service center (s):

_____

_____

Name, address and phone number of the authorized service center (s):

1) _____

2) _____

3) _____

Name, address and phone number of the authority issuing this warranty: (Manufacturer, Distributor, etc.)

_____

_____

COPY OF COMPLETE WARRANTY STATEMENT IS SUBMITTED HEREWITH: _____ Yes _____ No

Name of Bidder: _____

Signature _____

Title _____ Phone Number _____

**(MULTIPLE SHEETS CAN BE USED)**

Example Request for Quotation
Various Equipment and Amenities for Parks and Playgrounds

Description of Project:_____

_____

_____

A site plan (not to scale), along with drawing of proposed amenities, is attached. A mandatory site visit is scheduled for _____ at _____.

Price Quotation:

| Manufacturer | Item and Page Number | Quantity | MSRP Unit Price | Contract Discount | Extended Price |
|---|---|---|---|---|---|
| | | | | | |
| | | | | | |
| | | | | | |
| | | | | | |
| | | | | | |
| | | | | | |
| | | | | | |
| | | | | | |
| | | | | | |
| | | | | | |

*When quoting projects where freight would be charged, include those costs so freight charges can appear on the purchase order. Freight charges for equipment must be pre-paid and added to the invoice.

Additional Services Required:

| Description | Quantity | Unit Price | Extended Price |
|---|---|---|---|
| | | | |
| | | | |
| | | | |
| | | | |
| | | | |
| | | | |
| | | | |
| | | | |
| | | | |
| | | | |

Total: $_____

List any Subcontractors:

1. Name _____
2. Address _____
3. Telephone Number _____
4. Contact Name _____
5. Designated Work _____
6. Subcontractor Cost _____

**RFP No. 18/19-2, VARIOUS EQUIPMENT AND AMENITIES FOR PARKS AND PLAYGROUNDS**

CORPORATE DETAIL

Failure to complete all fields may result in your bid being rejected as non-responsive.

COMPANY NAME: _____

ADDRESS: _____

_____

_____

TELEPHONE: _____

FAX #: _____

E-MAIL: _____

Name of Person submitting Bid: _____

Title: _____

Signature: _____

Date: _____

ADDENDA ACKNOWLEDGMENT:
Bidder acknowledges receipt of the following addendum:

Addendum No. _____ Date: _____ Acknowledged by: _____

Addendum No. _____ Date: _____ Acknowledged by: _____

Addendum No. _____ Date: _____ Acknowledged by: _____

# Certification Regarding Debarment, Suspension, Ineligibility and Voluntary Exclusion Form

**RFP No. 18/19-2, VARIOUS EQUIPMENT AND AMENITIES FOR PARKS AND PLAYGROUNDS**

**(1) The prospective Vendor, _____, certifies, by submission of this document, that neither it nor its principals is presently debarred, suspended, proposed for debarment, declared ineligible, or voluntarily excluded from participation in this transaction by any Federal Department or Agency.**

**(2) Where the Vendor is unable to certify to the above statement, the prospective Vendor shall attach an explanation to this form.**

**Vendor:**

**_____**

**By: _____**
**Signature**

**_____**
**Name and Title**

**_____**
**Street Address**

**_____**
**City, State, Zip**

**_____**
**Date**

Scrutinized Companies Certification

[Clay County **RFP No. 18/19-2, VARIOUS EQUIPMENT AND AMENITIES FOR PARKS AND PLAYGROUNDS**]

Name of Company:[1] _____

In compliance with subsection (5) of Section 287.135(5), Florida Statutes (the Statute), the undersigned hereby certifies that the company named above is not participating in a boycott of Israel as defined in subsection (1) of the Statute; is not on the Scrutinized Companies with Activities in Sudan List or the Scrutinized Companies with Activities in the Iran Petroleum Energy Sector List as referred to in subsection (2) of the Statute; and does not have business operations in Cuba or Syria as defined in subsection (1) of the Statute.

Insert Name of Company:

_____

(Seal) _____

By: _____

_____

Its _____

[1] "Company" means a sole proprietorship, organization, association, corporation, partnership, joint venture, limited partnership, limited liability partnership, limited liability company, or other entity or business association, including all wholly owned subsidiaries, majority-owned subsidiaries, parent companies, or affiliates of such entities or business associations, that exists for the purpose of making profit.

# "NO BID" Statement

**RFP No. 18/19-2, VARIOUS EQUIPMENT AND AMENITIES FOR PARKS AND PLAYGROUNDS**

If your company does not intend to bid on this procurement, please complete and return this form prior to the date shown for receipt of Bids to: Clay County Purchasing Department, Attn: Donna Fish, 477 Houston Street, Green Cove Springs, FL 32043

We, the undersigned, decline to bid on the above referenced invitation to bid for the following reasons:

____ Specifications are too restrictive (please explain below or attach separately)

____ Unable to meet specifications

____ Specifications were unclear (please explain below or attach separately)

____ Insufficient time to respond

____ We do not offer this product or service

____ Our schedule would not permit us to perform at this time

____ Unable to meet bond requirements

____ Other (please explain below or attach separately)

Remarks:

_____

_____

Company Name: _____ Telephone #: _____

Signature: _____ Fax #: _____

Print Name: _____ Title: _____

Address: _____

City: _____

Zip: _____

## CHAPTER 8: PROCEDURES FOR PUBLIC BID OPENINGS

(A) **Purpose:** The purpose of this chapter is to specify procedures for the submittal, receipt, opening and recording of all formal bids required by all of the various laws, ordinances, and other procedures and manuals governing the solicitation and awarding of public bids in Clay County, Florida, including but not limited to:

a. Section 336.44, Florida Statues (2001).
b. Applicable Provisions of Clay County Code.
c. Florida Department of Transportation Standard Specifications, most recent edition.

(B) **Time of Opening:** All bids shall be submitted to the Purchasing department, 4th Floor, Clay County Administration Building, 477 Houston Street, Green Cove Springs, Florida, which shall record receipt thereof by date and time on the bid envelope. Upon receipt, the Purchasing department will maintain custody and control of all bid submittals until after they have been opened. The deadline for a particular bid submittal shall be 4:00 P.M., of the Monday immediately preceding the Tuesday upon which the bid is to be opened. No bid shall be opened unless and until proof by publisher's affidavit of publication of the bid solicitation is received and filed by the Purchasing department. Bidders and the public are welcomed to attend the opening and all subsequent committee and commission meetings related to the bids.

(C) **Form of Bid Submittal:** All bids shall be submitted in triplicate, (and if applicable only on the forms provided by the County or its staff). Each bid and its accompanying materials shall be submitted in a single, sealed and opaque envelope. The following items shall be prominently marked on the cover of the envelope by the party making the submittal prior thereto:

a. The number assigned to the particular bid solicitation.
b. The title of the bid exactly as it appeared in the published solicitation.
c. The date of the bid opening.

(D) **Bid Receipt Procedure**: The County Manager shall, in cooperation with his or her Department heads and the Purchasing department, assign a specific and discrete number and title to each bid solicitation, which shall be contained in the Request for Bids, the newspaper publication, specifications and the Bid Form thereof. Three copies of each request for bid shall be submitted to the Purchasing department for distribution as provided in Section F hereof, and the "Request For Bids" shall be signed prior to publication.

(E) **Place of Opening:** All bids properly submitted shall be opened in a public location so designated in the bid solicitation.

(F) **Distribution of Copies:** Upon the opening of a bid, one copy shall be distributed to the head of the originating department. Purchasing shall submit to the Finance committee of the Board a tabulated list of all bidders and their bids, including bid number, name, staff assigned, a recommendation to include but not be limited to the lowest responsive and responsible bid, or in a proper circumstance the best bid, budget information and alternatives. All staff assigned to evaluate bid and RFP responses shall do so observing all requirements of the Sunshine Law and

in meetings noticed at least 72 hours in advance thereof. The Purchasing department shall serve as the permanent record holder for the County Manager.

(G) **Committee Review, Report and Recommendations:** Bids shall be reviewed by the Board's Finance committee following the bid opening. The Committee should, in the absence of unusual circumstances, report its recommendation to the Board at the Board's next regularly scheduled meeting, which shall include a tabulated list of all bidders and their bids. In all events, the County Manager shall cause to be spread upon the minutes of the regular meeting of the Board next following the opening of a particular bid, a list of all bidders and their bids. Upon being awarded a bid, and if a contract is entered into with the successful bidder then the County's Standard Addendum and IRS Form W-9, Request for Taxpayer Identification and Certification must be completed.

(H) **Ineligible Bid:** Any bid that does not meet the foregoing requirements for form, time of submittal, number of copies or the specifications advertised will be rejected and the reasons stated therefor; provided that the Purchasing department shall reject and return unopened all bids which do not meet the foregoing requirements for time of submittal, or envelope markings. Bids that do not meet requirements for form will be rejected and declared "No Bid". The Board reserves the power to reject all bids and in its discretion to re-advertise the solicitation.

(I) **Bid Withdrawal Period:** Any bid submitted requires a five (5) percent bond unless waived by the Board prior to solicitation, which cannot be withdrawn for a period of 30 days subsequent to the date of the bid opening, notice of which shall be incorporated in all requests for bids. As used herein, the term bond shall include cashier or certified checks payable to the County. All such checks shall be held by the Finance department for safekeeping immediately upon acceptance of the bid (but not deposited). The Finance department is hereby authorized to return each bond to the submitting party, as soon as practicable, upon written request to the Finance department, but only after a bid and contract have been awarded and executed between the County and the successful bidder for a particular project, or in the event that all bids have been rejected by the Board, or in the event the time provided that the bid shall remain in effect shall have expired and the bid submitter requests its return in writing.

(1) Vendors bidding on SHIP rehabilitation projects are exempt from the bid bond requirements delineated in 8(I) above or as may be otherwise stated elsewhere in this policy document.

(2) Vendors bidding on commodities price contracts, or any other type of contract that does not commit the Board to an actual exchange transaction (purchase) but rather seeks only a fixed unit price commitment from a vendor in the event a future purchase decision is made, shall be exempt from the bid bond requirements delineated in 8(I) above or as may be otherwise stated elsewhere in this policy document.

(J) **Bid Addenda:** All addenda distributed subsequent to the initial distribution of specifications shall be sent by certified mail/return receipt requested, said return receipt to be returned to the Purchasing department identified by bid number. Prior to mailing, a copy of each addendum shall be received by the Purchasing department, provided that no addendum shall be mailed later than five (5) working days prior to the scheduled bid opening date.

(K) **Bid Tabulation Form:** The bid Tabulation Form used at bid openings shall include a place thereon for three witnesses to sign. This procedure will eliminate the need for signing each individual bid at the time of opening, thus requiring the three witnesses to sign only once for each bid number submitted.

(L) **Authority to Delay Bid Openings:** The County Manager is hereby authorized, without seeking prior approval of the Board in any particular case, to order a delay of any bid opening from its scheduled date and time to a time certain on the agenda of the next regularly scheduled meeting of the Board, or such special meeting called for such purpose. The delay may be ordered at any time prior to the time of the scheduled opening, provided that such order be in writing, addressed and delivered to the Purchasing department with a copy delivered to the County Manager, and that copies thereof be mailed by certified mail, return receipt requested to all responding bidders as soon thereafter as is reasonably practicable. Upon receipt of the order, the Purchasing department shall immediately record the date and time thereof. The Purchasing department shall continue to accept sealed bids up until the applicable deadline. At the date and time originally scheduled for the bid opening, the Purchasing department shall announce the delay order to all in attendance and shall continue to maintain in its custody all properly submitted sealed bids until further order of the Board. At the time certain scheduled before the Board, the County Manager shall present his reason or reasons for the delay order and his recommendation for disposition of bids submitted. The Board may order the bids to be opened then and there, or at some other time and date certain; it may cancel the bid and order the return of all bids unopened; it may order a further delay of the bid opening; or it may make any other order appropriate to the circumstances. If the bids are ultimately opened, they shall be reviewed as provided elsewhere herein. If a delay occurs as provided herein, then the 30 day withdrawal period as provided in 8(I) shall commence upon the date of the actual bid opening, provided such date is not more than 60 days subsequent to the originally scheduled date. No delay shall be ordered beyond such 60 day period, unless the parties submitting timely bids consent to such delay in writing. In no event is the County Manager authorized to extend the deadline for bid submittals for any particular project, only the bid opening date.

(M) **Contractor's Insurance Requirement**:

1. Any Contractor submitting a bid for any public works project must include, within its initial bid response, proof of the following insurance, in effect continuously from the date of submittal through the 60 days subsequent to the scheduled bid opening date:

a. Commercial General Liability

| | | |
|---|---|---|
| 1. | General Aggregate | $1,000,000 |
| 2. | Products and Completed Operations Aggregate | $1,000,000 |
| 3. | Personal and Advertising Injury | $1,000,000 |
| 4. | Each Occurrence | $1,000,000 |
| 5. | Fire Damage (any one fire) | $ 50,000 |
| 6. | Medical Expense (any one person) | $ 5,000 |

b. Automobile Liability

1. Any automobile-Combined bodily injury/property damage, with minimum limits for all additional coverage as required by Florida law $1,000,000

c. Workers Compensation/Employers Liability

| | | |
|---|---|---|
| 1. Workers Compensation | | statutory limits |
| 2. Employers Liability | | |
| | a. Each Accident | $ 100,000 |
| | b. Disease-Policy | $ 500,000 |
| | c. Disease-Each Employee | $ 100,000 |

d. Professional Liability

| | |
|---|---|
| 1. When required by contract-per occurrence | $1,000,000 |

2. Upon being awarded the bid, the contractor must provide proof that such insurance will be in effect from the date of commencement of the project. The contractor will maintain insurance coverage at the above-prescribed levels through the date of completion of the project and that coverage will include all independent contractors and subcontractors. Either prior to or simultaneously with the execution of the contract, the successful bidder must deliver certificates of insurance for the required insurance coverages to the County naming "Clay County, a political subdivision of the State of Florida; The Board of County Commissioners, Clay County, Florida; and all public agencies of Clay County, as their interests may appear" as "Additional Insureds." Said certificates of insurance shall also include a thirty day prior written notice of cancellation, modification or non-renewal to be provided to the County.

3. The Board reserves the right to waive, raise or lower the minimum coverages required for particular projects prior to bid solicitation by affirmative action. The Board will not waive any defects in a bid submittal pertaining to matters under this subsection.

**(N) <u>Bid Awards and Protests:</u>**

1. Both the **INSTRUCTIONS** and the **PUBLISHED NOTICE** for every sealed bid solicitation shall include conspicuously the following statements:

> FOLLOWING THE BID OPENING AND TABULATION, A "NOTICE OF INTENT TO AWARD BID" OR A "NOTICE OF REJECTION OF ALL BIDS" WILL BE POSTED ON THE INTERNET AT: [insert bid notice web address[1]]. THIS WEBPAGE CAN ALSO BE ACCESSED FROM THE HOMEPAGE OF THE COUNTY'S WEBSITE AT: [insert County's homepage address[2]] BY [insert suitable directions[3]]. NO OTHER NOTICE WILL BE POSTED.

[1] As of the date on which this Purchasing Policy was adopted, the bid notice web address was: http://www.claycountygov.com/departments/purchasing-division/bcc-bid-tabs-current-bids-intent-bids-rejection-bids

[2] As of the date on which this Purchasing Policy was adopted, the County's homepage address was: http://www.claycountygov.com/.

[3] As of the date on which this Purchasing Policy was adopted, suitable directions would be: "FOLLOWING THE "Notice of Intent Bids" LINK UNDER THE "Business" ROLLOVER BUTTON".

PROSPECTIVE BIDDERS ARE NOTIFIED THAT THE FAILURE TO INCLUDE WITHIN THE SEALED BID ENVELOPE A PROPER BID BOND OR OTHER SECURITY APPROVED UNDER THE COUNTY'S PURCHASING POLICY, IF REQUIRED FOR THIS SOLICITATION, OR THE FAILURE TO FILE A WRITTEN NOTICE OF PROTEST AND TO FILE A WRITTEN PETITION INITIATING A FORMAL PROTEST PROCEEDING WITHIN THE TIMES AND IN THE MANNER PRESCRIBED IN SECTION 8.N. OF SAID POLICY, SHALL CONSTITUTE A WAIVER OF THE RIGHT TO PROTEST THE BID SOLICITATION, ANY ADDENDUM THERETO, OR THE BID DECISION, AS APPLICABLE, AND TO INITIATE A FORMAL PROTEST PROCEEDING UNDER SAID POLICY. THE COUNTY'S PURCHASING POLICY CAN BE VIEWED AT THE COUNTY'S WEBSITE BY FOLLOWING THE APPROPRIATE LINKS FROM THE HOMEPAGE ADDRESS SET FORTH ABOVE.

IF A PROSPECTIVE BIDDER IS IN DOUBT WHETHER THIS SOLICITATION REQUIRES A BID BOND, SUCH PROSPECTIVE BIDDER IS SOLELY RESPONSIBLE FOR MAKING APPROPRIATE INQUIRY.

2. Unless otherwise expressly directed by the Board in its decision on a bid award, immediately following such decision the County Manager shall cause a "Notice of Intent to Award Bid" or a "Notice of Rejection of All Bids" to be posted on the County's website, with the time and date of posting appearing thereon. Notice shall not be posted elsewhere. The notice shall be posted in portable document format or other secure format.

3. The failure on the part of a prospective bidder to include within the sealed bid envelope a proper bid bond or other security approved under this policy, if required for the particular bid solicitation, or the failure by a prospective bidder to file a written notice of protest and to file a written petition initiating a formal protest proceeding within the times and in the manner prescribed in this section shall constitute a waiver of the prospective bidder's right to protest the bid solicitation, any addendum thereto, the Board's bid decision, as applicable, and to initiate a formal protest proceeding hereunder.

4. A prospective bidder is solely responsible for determining whether a particular bid solicitation requires a bid bond, and for resolving any doubt by making appropriate inquiry.

5. The County Manager shall cause a copy of this policy to be posted on the County's website in portable document format or other secure format. The County Manager shall cause to be established conspicuous and easy-to-follow links to the policy from the homepage.

6. Any person who is adversely affected by a bid solicitation, by any addendum thereto, or by a bid decision may file with the County Manager a written notice of protest no later than 4:30 p.m. on the third business day immediately following the date notice is published, with respect to a bid solicitation; no later than 4:30 p.m. on the third business day immediately following the date of issuance, with respect to a bid addendum; and within 72 hours after the posting of the notice, exclusive of hours occurring during days that are other than business days, with respect to a bid decision.

7. A formal protest proceeding shall be deemed commenced upon the timely filing of a written petition initiating the same. A written petition initiating a formal protest proceeding must be filed with the County Manager no later than 4:30 p.m. on the tenth calendar day immediately following the date on which the written notice of protest was filed; provided, if the tenth calendar day is not a business day, then the petition must be filed no later than 4:30 p.m. on the first business day immediately following said tenth calendar day. The petition must set forth with particularity the facts and law upon which the protest is based. The petition must conform substantially with the requirements for petitions set forth in Rule 28-106.201, Florida Administrative Code. References in this section to a petition shall mean a written petition initiating a formal protest proceeding filed in accordance with this subsection.

8. Any protest of a bid solicitation or bid addendum shall pertain exclusively to the terms, conditions, and specifications contained in a bid solicitation or bid addendum, including any provisions governing the methods for ranking bids, proposals, or replies, awarding contracts, reserving rights of further negotiation, or modifying or amending any contract.

9. Upon receipt of a formal written notice of protest that has been timely filed, the County Manager shall suspend the bid solicitation or bid award process until the subject of the protest is resolved by final action as specified in this section, unless the County Manager sets forth in writing particular facts and circumstances which require the continuance of the solicitation or award process without delay in order to avoid an immediate and serious danger to the public health, safety, or welfare. Such suspension shall be lifted immediately in the event the protesting party shall have failed to timely file a petition.

10. Intervenors shall be permitted to participate in the formal protest proceeding in accordance with the procedures governing intervenor practice set forth in Rule Chapter 28-106, Florida Administrative Code, and shall be subject to all limitations provided therein applicable to intervenors.

11. In his or her discretion, the County Manager may provide an opportunity to resolve the protest by mutual agreement between the County Manager and the protesting party within 7 calendar days after receipt of a timely petition. Such agreement must be reduced to writing, signed by the County Manager and the protesting party or such party's authorized agent, and submitted to the Board at the earliest opportunity. The agreement shall not be deemed effective unless ratified by the Board. If the Board shall fail to ratify the agreement, then the protest shall proceed to resolution as hereinafter provided.

12. Within 10 business days following the timely filing of a petition, or, if the Board shall have considered but failed to ratify an agreement submitted to it under subsection 11, then within 10 business days thereafter, a hearing shall be conducted pursuant to subsection 13 before a hearing officer, who shall be the County Manager or his or her designee. The County Manager may designate any department head as the hearing officer; provided, a department head who is substantially involved in or connected with the bid solicitation or bid award process shall be deemed disqualified from serving as the hearing officer, unless such involvement or connection is purely ministerial in nature.

13. All hearings shall be conducted pursuant to written notice to the protesting party, the County Attorney's Office and all intervenors by the hearing officer specifying the time, date and place of the hearing. Particular rules and procedures governing each such hearing are as follows:

a. The audio thereof shall be recorded electronically.

b. Prior to the hearing only, motion practice may be permitted by the hearing officer in his or her discretion in accordance with the rules governing the same set forth in Rule Chapter 28-106, Florida Administrative Code. All motions shall be ruled upon prior to or at the start of the hearing, except that rulings on motions in limine may be deferred to an appropriate time during or after the hearing.

c. Prior to the hearing, the protesting party, the County and all intervenors must confer and endeavor to stipulate to as many relevant and undisputed facts upon which the decision is to be based as may be practicable. Such stipulation must also identify those issues of material fact, if any, that remain in dispute. The stipulation must be reduced to a writing signed by or on behalf of the protesting party, the County and all intervenors, and be submitted to the hearing officer at least two business days prior to the hearing. The stipulation may include an appendix comprising documents that shall be deemed admitted and considered as evidence for purposes of the hearing, or referring to tangible items deemed admitted and considered as evidence for purposes of the hearing, which items shall either be presented at the hearing or, if such presentation is impractical, submitted to the hearing officer by graphic, descriptive, representational, photographic, videotape or similar medium properly depicting or characterizing the items.

d. The protesting party and all intervenors shall have the right to appear before the hearing officer at the hearing in proper person or through counsel and, as to those issues of material fact, if any, that remain in dispute, as identified in the stipulation, to present relevant testimonial, documentary and tangible evidence, and to be heard on the substantive issues bearing on the protest. The County shall be deemed a party to the proceeding, and the County Attorney or any assistant county attorney may participate in the protest proceeding, appear before the hearing officer, present evidence and be heard on behalf of the County.

e. All witnesses shall be placed under oath by the hearing officer prior to testifying, and shall be subject to cross-examination by any hearing participant.

f. Hearsay evidence shall be admissible unless the hearing officer shall determine the same to be redundant, unreliable or prejudicial.

g. At the hearing any hearing participant may offer appropriate argument and summation, and submit a written brief and a proposed order, but only after the conclusion of the evidentiary portion of the hearing, if any.

h. Immediately following the hearing, the County Manager shall cause a written transcript of all testimonial evidence introduced at the hearing to be prepared expeditiously based upon the audio recording, and shall provide copies of the same to all of the hearing participants.

i. Within 7 business days following the hearing, the hearing officer shall submit a recommended order to the County Manager and serve copies on all hearing participants; provided, if the County Manager is the hearing officer, then within 7 business days following the hearing, the County Manager shall issue a recommended order and serve copies on all hearing participants. The recommended order shall contain findings of fact and, based upon such facts, a disposition of the protest; provided, no finding of fact may be predicated solely upon the basis of hearsay.

j. The recommended order shall thereafter be submitted to the Board along with the transcript of the hearing testimony and the entire written and tangible record of the protest proceedings at the earliest opportunity to be considered at a time certain, with notice thereof served upon the hearing participants. Each of the hearing participants shall be allowed 3 minutes to address the Board regarding the recommended order, unless the Chairman in his or her discretion shall allow additional time. If a hearing participant intends to challenge any finding of fact in a recommended order that was based upon testimonial evidence, such participant shall be allowed 2 additional minutes for such purpose, and may direct the attention of the Board members to any portion of the transcript relevant to the challenge. The other hearing participants shall each have the right to offer argument in rebuttal to the challenge, and to direct the attention of the Board members to any portion of the transcript relevant to the rebuttal. No testimony or other evidence beyond the record and the transcript shall be presented to the Board. Thereafter the Board shall render its decision on the protest. In so doing the Board shall be bound by the findings of fact in the recommended order that are based upon testimonial evidence, except those for which it upholds a challenge. A challenge shall be upheld only if the finding of fact is not supported by competent, substantial evidence in the record or in the transcript. Otherwise, the Board shall not be bound by any of the provisions of the recommended order. The decision of the Board shall be reduced to a written order signed by the Chairman, and shall constitute final action of the County on the protest.

k. The date, type and substance of all ex parte communications between any Board member and a hearing participant, including counsel therefor or any agent thereof, and between any Board member and third party, must be publicly disclosed by the Board member prior to the rendering of the Board's decision. All such communications that are written or received electronically must be filed for the record, and copies thereof provided to each Board member and hearing participant.

14. All proceedings before the hearing officer shall be informal, and customary rules of evidence shall be relaxed. In all respects both the hearing officer and the Board shall observe the requirements of procedural and substantive due process that are the minimum necessary for accomplishing a fair, just and expeditious resolution of the protest.

15. Ex parte communications between a hearing participant and the hearing officer are forbidden. The hearing officer may take such steps as he or she may deem just and appropriate to prevent or sanction attempted ex parte communications, including promptly disclosing the attempted communication, or requiring the offending hearing participant to disclose promptly the attempted communication, to the other hearing participants. Where necessary, the hearing officer may recuse himself or herself, and the subsequently designated hearing officer may order the offending participant to pay for all or any portion of the costs incurred by the County and any other hearing participant strictly as a consequence of the ex parte communication or attempted ex parte communication, else be excluded from further participation. Neither the County Attorney nor any assistant county attorney shall be subject to this subsection or prohibited from engaging in ex parte communications with the hearing officer.

16. The purpose of this policy is to promote fairness and public confidence in the competitive bidding process. To further such end, and except as otherwise specifically provided herein, the substantive law governing the resolution of bid protests found in the decisions of the Florida appellate courts, as well as any statutes or agency rules that may be applicable to the particular bid solicitation, shall guide the hearing officer and the Board in rendering a decision on a bid protest under this section. The significant principles of law governing the bid protest and the resolution thereof, which shall prevail to the extent not otherwise in conflict with any governing statutes or agency rules, are as follows:

a. The burden is on the party protesting the award of the bid to establish a ground for invalidating the award.

b. The standard of proof for the protest proceeding shall be whether the proposed award was clearly erroneous, contrary to competition, arbitrary, or capricious.

c. The proposed award shall be deemed arbitrary or capricious if it is contrary in a material way to any governing statutes, the County's rules or policies, or the bid or proposal instructions or specifications.

d. The scope of the inquiry is limited initially to whether the proposed award is improper under the foregoing standard of proof. If and only if the hearing officer first determines on the basis of competent and substantial evidence that the proposed award is improper, then the hearing officer may recommend, in accordance with the law and this policy, an alternate disposition for the proposed award. Such disposition may include, but shall not be limited to, rejecting all bids, or awarding all or a portion of the bid to the protesting party.

e. A bid protest proceeding may not serve as a vehicle for the Board to revisit the proposed award absent a determination of impropriety as set forth above.

17. By written agreement amongst the protesting party, the County, and all then-existing intervenors, any provision of this section pertaining to the procedures for resolving a protest for which a petition has been timely filed may be modified or waived so long as such modification

or waiver shall not hinder or thwart the proper and expeditious resolution of the protest, or otherwise operate to undermine the salutary purposes of competitive, public bidding.

18. Only to the extent necessary to avoid a miscarriage of justice or to prevent a manifest violation of a hearing participant's procedural or substantive due process rights, a hearing officer may modify or suspend the applicability of any of the provisions or requirements of this section in the course of conducting a protest proceeding hereunder; provided, a hearing officer may not modify or suspend any of the provisions or requirements of subsections 3, 4, 6, 7, 8, 16, 20, 21 and 22 hereof.

19. Except and to the extent specifically provided in this section, and except and to the extent otherwise specified provided by written agreement amongst the protesting party, the County, and all then-existing intervenors, no provisions of Rule Chapter 28-106, Florida Administrative Code, shall be deemed applicable to the resolution of protests under this section.

20. For purposes of this section, the filing with the County Manager of a written notice of protest or of a written petition initiating a formal protest proceeding shall be deemed accomplished only when the original written notice or original written petition has been physically received by the County Manager or his or her designee. A notice or petition shall be deemed original only if it bears the original signature of the protesting party or such party's authorized agent. No notice or petition may be filed by facsimile transmission or by e-mail, and any notice or petition received in such manner shall be deemed unfiled and ineffective. The use of an overnight delivery service or of the United States Postal Service to file a notice or petition shall be entirely at the risk of the person submitting the same, and any such notice or petition so received after the applicable deadline shall be deemed untimely.

21. For purposes of this section, a business day shall mean any 24-hour day that is not a Saturday, a Sunday, or a holiday observed by the County.

22. For purposes of this section, counsel shall mean an attorney who is a member of the Florida Bar in good standing.

23. For purposes of this section, all notices of protest and petitions initiating formal protest proceedings, and all stipulations, briefs, proposed findings of fact, written motions and proposed orders submitted to a hearing officer shall be on white, opaque paper 8 ½ by 11 inches in size. The pages of all such documents shall have margins on all sides of not less than 1 inch; shall be in Times New Roman or Courier New font no smaller than 12 in size, including footnotes and endnotes; shall have standard double-spacing between lines, excluding quotations, footnotes and endnotes; and shall be numbered at the bottom. All quotations shall be indented. Briefs shall not exceed 15 pages in length, and may not include any appendices. A digital copy of all written stipulations, briefs, proposed findings of fact, written motions and proposed orders submitted to the hearing officer must be simultaneously provided to the hearing officer in Word format, version 2000 or later, on compact disc or 3 ½" diskette.

24. For purposes of this section, a hearing participant shall mean and include the protesting party, the County and any intervenor.

25. This section shall be construed and implemented so as to secure the just, speedy, and inexpensive resolution of bid protests.

(O) **UTILITY RELOCATION AGREEMENTS:** Prior to soliciting bids for right of way improvements and other public works projects that require the removal or relocation of utilities, agreements with the affected utilities must be entered into providing for the terms, scheduling and conditions of such relocation and removal. The County Manager may develop and maintain such form of agreement as may be appropriate for accomplishing the requirements of this section. *(Resolution No. 09/10-65)*

(P) **NO-CONTACT RULE:** *(Resolution No. 09/10-81)*

1. As used in this section and unless the context clearly requires otherwise, the following terms and phrases shall have the meanings herein ascribed:

a. Contacting shall mean communicating or attempting to communicate by any means, whether orally, telephonically, electronically or in writing.

b. Bidder shall mean any person or entity submitting a response to a bid solicitation, and shall include all owners, shareholders, principals, officers, employees and agents thereof.

c. Bid shall mean any bid, request for proposals and request for qualifications.

d. Solicitation period shall mean the time between the publication of the notice of the bid and the opening of the bid.

e. Evaluation period shall mean the time between the opening of the bid and the award thereof by the Board of County Commissioners.

2. The instructions for all solicitations of bids to be submitted under seal shall include provisions prohibiting bidders from contacting (i) any member of the Board of County Commissioners, the County Manager or any County employee or agent regarding the solicitation in any respect during the solicitation period, and (ii) the County Manager or any County employee or agent regarding the solicitation in any respect during the evaluation period. The violation of this rule shall result in the automatic disqualification of any response to a bid solicitation submitted by the violator, and the foregoing instructions shall so state.

3. The no-contact rule set forth in subsection 2 shall not apply to inquiries submitted to County employees or agents in the manner specifically provided in the bid solicitation package regarding the distribution thereof, or to communications seeking clarification regarding instructions or specifications submitted to County employees or agents in the manner specifically provided in the bid solicitation package, or to pre-bid conferences provided for in the bid solicitation package, or to formal presentations by finalists to the Board of County Commissioners or any committee thereof specifically contemplated in the bid solicitation package.

4. The purpose of the no-contact rule set forth in subsection 2 is to prevent any one bidder from gaining an advantage over other bidders through lobbying or otherwise attempting to influence the procurement decision through discussions or the presentation of information or materials outside of the process contemplated in the bid solicitation package and this purchasing policy, and also to ensure that the dissemination of information from the County entity to bidders regarding the bid solicitation is equal and uniform.

Form **W-9**
(Rev. October 2018)
Department of the Treasury
Internal Revenue Service

# Request for Taxpayer Identification Number and Certification

▶ **Go to *www.irs.gov/FormW9* for instructions and the latest information.**

**Give Form to the requester. Do not send to the IRS.**

Print or type. See Specific Instructions on page 3.

1 Name (as shown on your income tax return). Name is required on this line; do not leave this line blank.

2 Business name/disregarded entity name, if different from above

3 Check appropriate box for federal tax classification of the person whose name is entered on line 1. Check only **one** of the following seven boxes.

☐ Individual/sole proprietor or single-member LLC ☐ C Corporation ☐ S Corporation ☐ Partnership ☐ Trust/estate

☐ Limited liability company. Enter the tax classification (C=C corporation, S=S corporation, P=Partnership) ▶ _____

**Note:** Check the appropriate box in the line above for the tax classification of the single-member owner. Do not check LLC if the LLC is classified as a single-member LLC that is disregarded from the owner unless the owner of the LLC is another LLC that is not disregarded from the owner for U.S. federal tax purposes. Otherwise, a single-member LLC that is disregarded from the owner should check the appropriate box for the tax classification of its owner.

☐ Other (see instructions) ▶

4 Exemptions (codes apply only to certain entities, not individuals; see instructions on page 3):

Exempt payee code (if any) _____

Exemption from FATCA reporting code (if any) _____

*(Applies to accounts maintained outside the U.S.)*

5 Address (number, street, and apt. or suite no.) See instructions.

Requester's name and address (optional)

6 City, state, and ZIP code

7 List account number(s) here (optional)

## Part I Taxpayer Identification Number (TIN)

Enter your TIN in the appropriate box. The TIN provided must match the name given on line 1 to avoid backup withholding. For individuals, this is generally your social security number (SSN). However, for a resident alien, sole proprietor, or disregarded entity, see the instructions for Part I, later. For other entities, it is your employer identification number (EIN). If you do not have a number, see *How to get a TIN*, later.

**Note:** If the account is in more than one name, see the instructions for line 1. Also see *What Name and Number To Give the Requester* for guidelines on whose number to enter.

**Social security number**

| | | | | | | | | |
|---|---|---|---|---|---|---|---|---|
| | | | – | | | – | | | | |

**or**

**Employer identification number**

| | | | | | | | | | |
|---|---|---|---|---|---|---|---|---|---|
| | | – | | | | | | | |

## Part II Certification

Under penalties of perjury, I certify that:

1. The number shown on this form is my correct taxpayer identification number (or I am waiting for a number to be issued to me); and
2. I am not subject to backup withholding because: (a) I am exempt from backup withholding, or (b) I have not been notified by the Internal Revenue Service (IRS) that I am subject to backup withholding as a result of a failure to report all interest or dividends, or (c) the IRS has notified me that I am no longer subject to backup withholding; and
3. I am a U.S. citizen or other U.S. person (defined below); and
4. The FATCA code(s) entered on this form (if any) indicating that I am exempt from FATCA reporting is correct.

**Certification instructions.** You must cross out item 2 above if you have been notified by the IRS that you are currently subject to backup withholding because you have failed to report all interest and dividends on your tax return. For real estate transactions, item 2 does not apply. For mortgage interest paid, acquisition or abandonment of secured property, cancellation of debt, contributions to an individual retirement arrangement (IRA), and generally, payments other than interest and dividends, you are not required to sign the certification, but you must provide your correct TIN. See the instructions for Part II, later.

**Sign Here** **Signature of U.S. person** ▶ **Date** ▶

# General Instructions

Section references are to the Internal Revenue Code unless otherwise noted.

**Future developments.** For the latest information about developments related to Form W-9 and its instructions, such as legislation enacted after they were published, go to *www.irs.gov/FormW9*.

## Purpose of Form

An individual or entity (Form W-9 requester) who is required to file an information return with the IRS must obtain your correct taxpayer identification number (TIN) which may be your social security number (SSN), individual taxpayer identification number (ITIN), adoption taxpayer identification number (ATIN), or employer identification number (EIN), to report on an information return the amount paid to you, or other amount reportable on an information return. Examples of information returns include, but are not limited to, the following.

- Form 1099-INT (interest earned or paid)
- Form 1099-DIV (dividends, including those from stocks or mutual funds)
- Form 1099-MISC (various types of income, prizes, awards, or gross proceeds)
- Form 1099-B (stock or mutual fund sales and certain other transactions by brokers)
- Form 1099-S (proceeds from real estate transactions)
- Form 1099-K (merchant card and third party network transactions)
- Form 1098 (home mortgage interest), 1098-E (student loan interest), 1098-T (tuition)
- Form 1099-C (canceled debt)
- Form 1099-A (acquisition or abandonment of secured property)

Use Form W-9 only if you are a U.S. person (including a resident alien), to provide your correct TIN.

*If you do not return Form W-9 to the requester with a TIN, you might be subject to backup withholding. See* What is backup withholding, *later.*

By signing the filled-out form, you:

1. Certify that the TIN you are giving is correct (or you are waiting for a number to be issued),

2. Certify that you are not subject to backup withholding, or

3. Claim exemption from backup withholding if you are a U.S. exempt payee. If applicable, you are also certifying that as a U.S. person, your allocable share of any partnership income from a U.S. trade or business is not subject to the withholding tax on foreign partners' share of effectively connected income, and

4. Certify that FATCA code(s) entered on this form (if any) indicating that you are exempt from the FATCA reporting, is correct. See *What is FATCA reporting,* later, for further information.

**Note:** If you are a U.S. person and a requester gives you a form other than Form W-9 to request your TIN, you must use the requester's form if it is substantially similar to this Form W-9.

**Definition of a U.S. person.** For federal tax purposes, you are considered a U.S. person if you are:

- An individual who is a U.S. citizen or U.S. resident alien;
- A partnership, corporation, company, or association created or organized in the United States or under the laws of the United States;
- An estate (other than a foreign estate); or
- A domestic trust (as defined in Regulations section 301.7701-7).

**Special rules for partnerships.** Partnerships that conduct a trade or business in the United States are generally required to pay a withholding tax under section 1446 on any foreign partners' share of effectively connected taxable income from such business. Further, in certain cases where a Form W-9 has not been received, the rules under section 1446 require a partnership to presume that a partner is a foreign person, and pay the section 1446 withholding tax. Therefore, if you are a U.S. person that is a partner in a partnership conducting a trade or business in the United States, provide Form W-9 to the partnership to establish your U.S. status and avoid section 1446 withholding on your share of partnership income.

In the cases below, the following person must give Form W-9 to the partnership for purposes of establishing its U.S. status and avoiding withholding on its allocable share of net income from the partnership conducting a trade or business in the United States.

- In the case of a disregarded entity with a U.S. owner, the U.S. owner of the disregarded entity and not the entity;
- In the case of a grantor trust with a U.S. grantor or other U.S. owner, generally, the U.S. grantor or other U.S. owner of the grantor trust and not the trust; and
- In the case of a U.S. trust (other than a grantor trust), the U.S. trust (other than a grantor trust) and not the beneficiaries of the trust.

**Foreign person.** If you are a foreign person or the U.S. branch of a foreign bank that has elected to be treated as a U.S. person, do not use Form W-9. Instead, use the appropriate Form W-8 or Form 8233 (see Pub. 515, Withholding of Tax on Nonresident Aliens and Foreign Entities).

**Nonresident alien who becomes a resident alien.** Generally, only a nonresident alien individual may use the terms of a tax treaty to reduce or eliminate U.S. tax on certain types of income. However, most tax treaties contain a provision known as a "saving clause." Exceptions specified in the saving clause may permit an exemption from tax to continue for certain types of income even after the payee has otherwise become a U.S. resident alien for tax purposes.

If you are a U.S. resident alien who is relying on an exception contained in the saving clause of a tax treaty to claim an exemption from U.S. tax on certain types of income, you must attach a statement to Form W-9 that specifies the following five items.

1. The treaty country. Generally, this must be the same treaty under which you claimed exemption from tax as a nonresident alien.

2. The treaty article addressing the income.

3. The article number (or location) in the tax treaty that contains the saving clause and its exceptions.

4. The type and amount of income that qualifies for the exemption from tax.

5. Sufficient facts to justify the exemption from tax under the terms of the treaty article.

***Example.*** Article 20 of the U.S.-China income tax treaty allows an exemption from tax for scholarship income received by a Chinese student temporarily present in the United States. Under U.S. law, this student will become a resident alien for tax purposes if his or her stay in the United States exceeds 5 calendar years. However, paragraph 2 of the first Protocol to the U.S.-China treaty (dated April 30, 1984) allows the provisions of Article 20 to continue to apply even after the Chinese student becomes a resident alien of the United States. A Chinese student who qualifies for this exception (under paragraph 2 of the first protocol) and is relying on this exception to claim an exemption from tax on his or her scholarship or fellowship income would attach to Form W-9 a statement that includes the information described above to support that exemption.

If you are a nonresident alien or a foreign entity, give the requester the appropriate completed Form W-8 or Form 8233.

## Backup Withholding

**What is backup withholding?** Persons making certain payments to you must under certain conditions withhold and pay to the IRS 24% of such payments. This is called "backup withholding." Payments that may be subject to backup withholding include interest, tax-exempt interest, dividends, broker and barter exchange transactions, rents, royalties, nonemployee pay, payments made in settlement of payment card and third party network transactions, and certain payments from fishing boat operators. Real estate transactions are not subject to backup withholding.

You will not be subject to backup withholding on payments you receive if you give the requester your correct TIN, make the proper certifications, and report all your taxable interest and dividends on your tax return.

**Payments you receive will be subject to backup withholding if:**

1. You do not furnish your TIN to the requester,

2. You do not certify your TIN when required (see the instructions for Part II for details),

3. The IRS tells the requester that you furnished an incorrect TIN,

4. The IRS tells you that you are subject to backup withholding because you did not report all your interest and dividends on your tax return (for reportable interest and dividends only), or

5. You do not certify to the requester that you are not subject to backup withholding under 4 above (for reportable interest and dividend accounts opened after 1983 only).

Certain payees and payments are exempt from backup withholding. See *Exempt payee code,* later, and the separate Instructions for the Requester of Form W-9 for more information.

Also see *Special rules for partnerships,* earlier.

## What is FATCA Reporting?

The Foreign Account Tax Compliance Act (FATCA) requires a participating foreign financial institution to report all United States account holders that are specified United States persons. Certain payees are exempt from FATCA reporting. See *Exemption from FATCA reporting code,* later, and the Instructions for the Requester of Form W-9 for more information.

## Updating Your Information

You must provide updated information to any person to whom you claimed to be an exempt payee if you are no longer an exempt payee and anticipate receiving reportable payments in the future from this person. For example, you may need to provide updated information if you are a C corporation that elects to be an S corporation, or if you no longer are tax exempt. In addition, you must furnish a new Form W-9 if the name or TIN changes for the account; for example, if the grantor of a grantor trust dies.

## Penalties

**Failure to furnish TIN.** If you fail to furnish your correct TIN to a requester, you are subject to a penalty of $50 for each such failure unless your failure is due to reasonable cause and not to willful neglect.

**Civil penalty for false information with respect to withholding.** If you make a false statement with no reasonable basis that results in no backup withholding, you are subject to a $500 penalty.

**Criminal penalty for falsifying information.** Willfully falsifying certifications or affirmations may subject you to criminal penalties including fines and/or imprisonment.

**Misuse of TINs.** If the requester discloses or uses TINs in violation of federal law, the requester may be subject to civil and criminal penalties.

# Specific Instructions

## Line 1

You must enter one of the following on this line; **do not** leave this line blank. The name should match the name on your tax return.

If this Form W-9 is for a joint account (other than an account maintained by a foreign financial institution (FFI)), list first, and then circle, the name of the person or entity whose number you entered in Part I of Form W-9. If you are providing Form W-9 to an FFI to document a joint account, each holder of the account that is a U.S. person must provide a Form W-9.

a. **Individual.** Generally, enter the name shown on your tax return. If you have changed your last name without informing the Social Security Administration (SSA) of the name change, enter your first name, the last name as shown on your social security card, and your new last name.

**Note: ITIN applicant:** Enter your individual name as it was entered on your Form W-7 application, line 1a. This should also be the same as the name you entered on the Form 1040/1040A/1040EZ you filed with your application.

b. **Sole proprietor or single-member LLC.** Enter your individual name as shown on your 1040/1040A/1040EZ on line 1. You may enter your business, trade, or "doing business as" (DBA) name on line 2.

c. **Partnership, LLC that is not a single-member LLC, C corporation, or S corporation.** Enter the entity's name as shown on the entity's tax return on line 1 and any business, trade, or DBA name on line 2.

d. **Other entities.** Enter your name as shown on required U.S. federal tax documents on line 1. This name should match the name shown on the charter or other legal document creating the entity. You may enter any business, trade, or DBA name on line 2.

e. **Disregarded entity.** For U.S. federal tax purposes, an entity that is disregarded as an entity separate from its owner is treated as a "disregarded entity." See Regulations section 301.7701-2(c)(2)(iii). Enter the owner's name on line 1. The name of the entity entered on line 1 should never be a disregarded entity. The name on line 1 should be the name shown on the income tax return on which the income should be reported. For example, if a foreign LLC that is treated as a disregarded entity for U.S. federal tax purposes has a single owner that is a U.S. person, the U.S. owner's name is required to be provided on line 1. If the direct owner of the entity is also a disregarded entity, enter the first owner that is not disregarded for federal tax purposes. Enter the disregarded entity's name on line 2, "Business name/disregarded entity name." If the owner of the disregarded entity is a foreign person, the owner must complete an appropriate Form W-8 instead of a Form W-9. This is the case even if the foreign person has a U.S. TIN.

## Line 2

If you have a business name, trade name, DBA name, or disregarded entity name, you may enter it on line 2.

## Line 3

Check the appropriate box on line 3 for the U.S. federal tax classification of the person whose name is entered on line 1. Check only one box on line 3.

| IF the entity/person on line 1 is a(n) . . . | THEN check the box for . . . |
|---|---|
| • Corporation | Corporation |
| • Individual<br>• Sole proprietorship, or<br>• Single-member limited liability company (LLC) owned by an individual and disregarded for U.S. federal tax purposes. | Individual/sole proprietor or single-member LLC |
| • LLC treated as a partnership for U.S. federal tax purposes,<br>• LLC that has filed Form 8832 or 2553 to be taxed as a corporation, or<br>• LLC that is disregarded as an entity separate from its owner but the owner is another LLC that is not disregarded for U.S. federal tax purposes. | Limited liability company and enter the appropriate tax classification. (P= Partnership; C= C corporation; or S= S corporation) |
| • Partnership | Partnership |
| • Trust/estate | Trust/estate |

## Line 4, Exemptions

If you are exempt from backup withholding and/or FATCA reporting, enter in the appropriate space on line 4 any code(s) that may apply to you.

**Exempt payee code.**

- Generally, individuals (including sole proprietors) are not exempt from backup withholding.
- Except as provided below, corporations are exempt from backup withholding for certain payments, including interest and dividends.
- Corporations are not exempt from backup withholding for payments made in settlement of payment card or third party network transactions.
- Corporations are not exempt from backup withholding with respect to attorneys' fees or gross proceeds paid to attorneys, and corporations that provide medical or health care services are not exempt with respect to payments reportable on Form 1099-MISC.

The following codes identify payees that are exempt from backup withholding. Enter the appropriate code in the space in line 4.

1—An organization exempt from tax under section 501(a), any IRA, or a custodial account under section 403(b)(7) if the account satisfies the requirements of section 401(f)(2)

2—The United States or any of its agencies or instrumentalities

3—A state, the District of Columbia, a U.S. commonwealth or possession, or any of their political subdivisions or instrumentalities

4—A foreign government or any of its political subdivisions, agencies, or instrumentalities

5—A corporation

6—A dealer in securities or commodities required to register in the United States, the District of Columbia, or a U.S. commonwealth or possession

7—A futures commission merchant registered with the Commodity Futures Trading Commission

8—A real estate investment trust

9—An entity registered at all times during the tax year under the Investment Company Act of 1940

10—A common trust fund operated by a bank under section 584(a)

11—A financial institution

12—A middleman known in the investment community as a nominee or custodian

13—A trust exempt from tax under section 664 or described in section 4947

The following chart shows types of payments that may be exempt from backup withholding. The chart applies to the exempt payees listed above, 1 through 13.

| IF the payment is for . . . | THEN the payment is exempt for . . . |
|---|---|
| Interest and dividend payments | All exempt payees except for 7 |
| Broker transactions | Exempt payees 1 through 4 and 6 through 11 and all C corporations. S corporations must not enter an exempt payee code because they are exempt only for sales of noncovered securities acquired prior to 2012. |
| Barter exchange transactions and patronage dividends | Exempt payees 1 through 4 |
| Payments over $600 required to be reported and direct sales over $5,000[1] | Generally, exempt payees 1 through 5[2] |
| Payments made in settlement of payment card or third party network transactions | Exempt payees 1 through 4 |

[1] See Form 1099-MISC, Miscellaneous Income, and its instructions.

[2] However, the following payments made to a corporation and reportable on Form 1099-MISC are not exempt from backup withholding: medical and health care payments, attorneys' fees, gross proceeds paid to an attorney reportable under section 6045(f), and payments for services paid by a federal executive agency.

**Exemption from FATCA reporting code.** The following codes identify payees that are exempt from reporting under FATCA. These codes apply to persons submitting this form for accounts maintained outside of the United States by certain foreign financial institutions. Therefore, if you are only submitting this form for an account you hold in the United States, you may leave this field blank. Consult with the person requesting this form if you are uncertain if the financial institution is subject to these requirements. A requester may indicate that a code is not required by providing you with a Form W-9 with "Not Applicable" (or any similar indication) written or printed on the line for a FATCA exemption code.

A—An organization exempt from tax under section 501(a) or any individual retirement plan as defined in section 7701(a)(37)

B—The United States or any of its agencies or instrumentalities

C—A state, the District of Columbia, a U.S. commonwealth or possession, or any of their political subdivisions or instrumentalities

D—A corporation the stock of which is regularly traded on one or more established securities markets, as described in Regulations section 1.1472-1(c)(1)(i)

E—A corporation that is a member of the same expanded affiliated group as a corporation described in Regulations section 1.1472-1(c)(1)(i)

F—A dealer in securities, commodities, or derivative financial instruments (including notional principal contracts, futures, forwards, and options) that is registered as such under the laws of the United States or any state

G—A real estate investment trust

H—A regulated investment company as defined in section 851 or an entity registered at all times during the tax year under the Investment Company Act of 1940

I—A common trust fund as defined in section 584(a)

J—A bank as defined in section 581

K—A broker

L—A trust exempt from tax under section 664 or described in section 4947(a)(1)

M—A tax exempt trust under a section 403(b) plan or section 457(g) plan

**Note:** You may wish to consult with the financial institution requesting this form to determine whether the FATCA code and/or exempt payee code should be completed.

### Line 5

Enter your address (number, street, and apartment or suite number). This is where the requester of this Form W-9 will mail your information returns. If this address differs from the one the requester already has on file, write NEW at the top. If a new address is provided, there is still a chance the old address will be used until the payor changes your address in their records.

### Line 6

Enter your city, state, and ZIP code.

## Part I. Taxpayer Identification Number (TIN)

**Enter your TIN in the appropriate box.** If you are a resident alien and you do not have and are not eligible to get an SSN, your TIN is your IRS individual taxpayer identification number (ITIN). Enter it in the social security number box. If you do not have an ITIN, see *How to get a TIN* below.

If you are a sole proprietor and you have an EIN, you may enter either your SSN or EIN.

If you are a single-member LLC that is disregarded as an entity separate from its owner, enter the owner's SSN (or EIN, if the owner has one). Do not enter the disregarded entity's EIN. If the LLC is classified as a corporation or partnership, enter the entity's EIN.

**Note:** See *What Name and Number To Give the Requester,* later, for further clarification of name and TIN combinations.

**How to get a TIN.** If you do not have a TIN, apply for one immediately. To apply for an SSN, get Form SS-5, Application for a Social Security Card, from your local SSA office or get this form online at *www.SSA.gov*. You may also get this form by calling 1-800-772-1213. Use Form W-7, Application for IRS Individual Taxpayer Identification Number, to apply for an ITIN, or Form SS-4, Application for Employer Identification Number, to apply for an EIN. You can apply for an EIN online by accessing the IRS website at *www.irs.gov/Businesses* and clicking on Employer Identification Number (EIN) under Starting a Business. Go to *www.irs.gov/Forms* to view, download, or print Form W-7 and/or Form SS-4. Or, you can go to *www.irs.gov/OrderForms* to place an order and have Form W-7 and/or SS-4 mailed to you within 10 business days.

If you are asked to complete Form W-9 but do not have a TIN, apply for a TIN and write "Applied For" in the space for the TIN, sign and date the form, and give it to the requester. For interest and dividend payments, and certain payments made with respect to readily tradable instruments, generally you will have 60 days to get a TIN and give it to the requester before you are subject to backup withholding on payments. The 60-day rule does not apply to other types of payments. You will be subject to backup withholding on all such payments until you provide your TIN to the requester.

**Note:** Entering "Applied For" means that you have already applied for a TIN or that you intend to apply for one soon.

**Caution:** A disregarded U.S. entity that has a foreign owner must use the appropriate Form W-8.

## Part II. Certification

To establish to the withholding agent that you are a U.S. person, or resident alien, sign Form W-9. You may be requested to sign by the withholding agent even if item 1, 4, or 5 below indicates otherwise.

For a joint account, only the person whose TIN is shown in Part I should sign (when required). In the case of a disregarded entity, the person identified on line 1 must sign. Exempt payees, see *Exempt payee code,* earlier.

**Signature requirements.** Complete the certification as indicated in items 1 through 5 below.

**1. Interest, dividend, and barter exchange accounts opened before 1984 and broker accounts considered active during 1983.** You must give your correct TIN, but you do not have to sign the certification.

**2. Interest, dividend, broker, and barter exchange accounts opened after 1983 and broker accounts considered inactive during 1983.** You must sign the certification or backup withholding will apply. If you are subject to backup withholding and you are merely providing your correct TIN to the requester, you must cross out item 2 in the certification before signing the form.

**3. Real estate transactions.** You must sign the certification. You may cross out item 2 of the certification.

**4. Other payments.** You must give your correct TIN, but you do not have to sign the certification unless you have been notified that you have previously given an incorrect TIN. "Other payments" include payments made in the course of the requester's trade or business for rents, royalties, goods (other than bills for merchandise), medical and health care services (including payments to corporations), payments to a nonemployee for services, payments made in settlement of payment card and third party network transactions, payments to certain fishing boat crew members and fishermen, and gross proceeds paid to attorneys (including payments to corporations).

**5. Mortgage interest paid by you, acquisition or abandonment of secured property, cancellation of debt, qualified tuition program payments (under section 529), ABLE accounts (under section 529A), IRA, Coverdell ESA, Archer MSA or HSA contributions or distributions, and pension distributions.** You must give your correct TIN, but you do not have to sign the certification.

## What Name and Number To Give the Requester

| For this type of account: | Give name and SSN of: |
|---|---|
| 1. Individual | The individual |
| 2. Two or more individuals (joint account) other than an account maintained by an FFI | The actual owner of the account or, if combined funds, the first individual on the account[1] |
| 3. Two or more U.S. persons (joint account maintained by an FFI) | Each holder of the account |
| 4. Custodial account of a minor (Uniform Gift to Minors Act) | The minor[2] |
| 5. a. The usual revocable savings trust (grantor is also trustee) | The grantor-trustee[1] |
| b. So-called trust account that is not a legal or valid trust under state law | The actual owner[1] |
| 6. Sole proprietorship or disregarded entity owned by an individual | The owner[3] |
| 7. Grantor trust filing under Optional Form 1099 Filing Method 1 (see Regulations section 1.671-4(b)(2)(i)(A)) | The grantor* |
| **For this type of account:** | **Give name and EIN of:** |
| 8. Disregarded entity not owned by an individual | The owner |
| 9. A valid trust, estate, or pension trust | Legal entity[4] |
| 10. Corporation or LLC electing corporate status on Form 8832 or Form 2553 | The corporation |
| 11. Association, club, religious, charitable, educational, or other tax-exempt organization | The organization |
| 12. Partnership or multi-member LLC | The partnership |
| 13. A broker or registered nominee | The broker or nominee |
| 14. Account with the Department of Agriculture in the name of a public entity (such as a state or local government, school district, or prison) that receives agricultural program payments | The public entity |
| 15. Grantor trust filing under the Form 1041 Filing Method or the Optional Form 1099 Filing Method 2 (see Regulations section 1.671-4(b)(2)(i)(B)) | The trust |

[1] List first and circle the name of the person whose number you furnish. If only one person on a joint account has an SSN, that person's number must be furnished.

[2] Circle the minor's name and furnish the minor's SSN.

[3] You must show your individual name and you may also enter your business or DBA name on the "Business name/disregarded entity" name line. You may use either your SSN or EIN (if you have one), but the IRS encourages you to use your SSN.

[4] List first and circle the name of the trust, estate, or pension trust. (Do not furnish the TIN of the personal representative or trustee unless the legal entity itself is not designated in the account title.) Also see *Special rules for partnerships*, earlier.

*Note: The grantor also must provide a Form W-9 to trustee of trust.

**Note:** If no name is circled when more than one name is listed, the number will be considered to be that of the first name listed.

## Secure Your Tax Records From Identity Theft

Identity theft occurs when someone uses your personal information such as your name, SSN, or other identifying information, without your permission, to commit fraud or other crimes. An identity thief may use your SSN to get a job or may file a tax return using your SSN to receive a refund.

To reduce your risk:

- Protect your SSN,
- Ensure your employer is protecting your SSN, and
- Be careful when choosing a tax preparer.

If your tax records are affected by identity theft and you receive a notice from the IRS, respond right away to the name and phone number printed on the IRS notice or letter.

If your tax records are not currently affected by identity theft but you think you are at risk due to a lost or stolen purse or wallet, questionable credit card activity or credit report, contact the IRS Identity Theft Hotline at 1-800-908-4490 or submit Form 14039.

For more information, see Pub. 5027, Identity Theft Information for Taxpayers.

Victims of identity theft who are experiencing economic harm or a systemic problem, or are seeking help in resolving tax problems that have not been resolved through normal channels, may be eligible for Taxpayer Advocate Service (TAS) assistance. You can reach TAS by calling the TAS toll-free case intake line at 1-877-777-4778 or TTY/TDD 1-800-829-4059.

**Protect yourself from suspicious emails or phishing schemes.** Phishing is the creation and use of email and websites designed to mimic legitimate business emails and websites. The most common act is sending an email to a user falsely claiming to be an established legitimate enterprise in an attempt to scam the user into surrendering private information that will be used for identity theft.

The IRS does not initiate contacts with taxpayers via emails. Also, the IRS does not request personal detailed information through email or ask taxpayers for the PIN numbers, passwords, or similar secret access information for their credit card, bank, or other financial accounts.

If you receive an unsolicited email claiming to be from the IRS, forward this message to *phishing@irs.gov*. You may also report misuse of the IRS name, logo, or other IRS property to the Treasury Inspector General for Tax Administration (TIGTA) at 1-800-366-4484. You can forward suspicious emails to the Federal Trade Commission at *spam@uce.gov* or report them at *www.ftc.gov/complaint*. You can contact the FTC at *www.ftc.gov/idtheft* or 877-IDTHEFT (877-438-4338). If you have been the victim of identity theft, see *www.IdentityTheft.gov* and Pub. 5027.

Visit *www.irs.gov/IdentityTheft* to learn more about identity theft and how to reduce your risk.

## Privacy Act Notice

Section 6109 of the Internal Revenue Code requires you to provide your correct TIN to persons (including federal agencies) who are required to file information returns with the IRS to report interest, dividends, or certain other income paid to you; mortgage interest you paid; the acquisition or abandonment of secured property; the cancellation of debt; or contributions you made to an IRA, Archer MSA, or HSA. The person collecting this form uses the information on the form to file information returns with the IRS, reporting the above information. Routine uses of this information include giving it to the Department of Justice for civil and criminal litigation and to cities, states, the District of Columbia, and U.S. commonwealths and possessions for use in administering their laws. The information also may be disclosed to other countries under a treaty, to federal and state agencies to enforce civil and criminal laws, or to federal law enforcement and intelligence agencies to combat terrorism. You must provide your TIN whether or not you are required to file a tax return. Under section 3406, payers must generally withhold a percentage of taxable interest, dividend, and certain other payments to a payee who does not give a TIN to the payer. Certain penalties may also apply for providing false or fraudulent information.

# BID TABULATION FORM

RFP: 18/19-2

Date: March 19, 2019

Proj: **Various Equipment and Amenities for Parks and Playgrounds**

Time Open: 1:00

Ad: Clay Today, February 14, 2019

Time Close 2:12

This is a generic Bid Tabulation Form; all required bid documents will be verified prior to bid recommendation.

**Bids to be evaluated based on evaluation criteria established in bid document**

| | Bidder | Copies | W9 | Insurance | Total |
|---|---|---|---|---|---|
| 1 | Custom Canopies Inc. | ✓ | ✓ | ✓ | TBD |
| 2 | Dominica Recreation Products | ✓ | ✓ | ✓ | TBD |
| 3 | Rosette Equipment Company | ✓ | ✓ | ✓ | TBD |
| 4 | Recycled Plastic Factory LLC | ✓ | ✓ | ✓ | TBD |
| 5 | Playworx Playsets LLC. | ✓ | ✓ | ✓ | TBD |
| 6 | Dynamo Industries | ✓ | ✓ | ✓ | TBD |
| 7 | Robertson Industries | ✓ | ✓ | ✓ | TBD |
| 8 | RCP Shelters | ✓ | ✓ | ✓ | TBD |
| 9 | Miracle Recreation/True North | ✓ | ✓ | ✓ | TBD |
| 10 | Nevco Sports LLC | ✓ | ✓ | ✓ | TBD |
| 11 | Regal Contractors, Inc. | ✓ | ✓ | ✓ | TBD |
| 12 | Wausau Tile Inc. | ✓ | ✓ | ✓ | TBD |
| 13 | MuscoSports Lighting LLC | ✓ | ✓ | ✓ | TBD |
| 14 | Greenfield Outdoor Fitness, Inc. | ✓ | ✓ | ✓ | TBD |
| 15 | Miller Recreation Equipment & Design Inc | ✓ | | | TBD |

**Staff Assigned to tabulate bids and make recommendations:**

James Householder
Name

Facilities Maintenance Director
Title

**Recommendations:** Staff will review the bids and present a recommendation to the Finance Committee for subsequent recommendation to the Board. Bids to be evaluated based on evaluation criteria established in bid document.

Bid Opening Witnessed By: Donna Fish
(BCC)

Clerk

Department Representative

# BID TABULATION FORM

RFP: 18/19-2

Date: March 19, 2019

Proj: **Various Equipment and Amenities for Parks and Playgrounds**

Time Open: 1:00

Ad: Clay Today, February 14, 2019

Time Close 2:12

This is a generic Bid Tabulation Form; all required bid documents will be verified prior to bid recommendation.

**Bids to be evaluated based on evaluation criteria established in bid document**

| | Bidder | Copies | W9 | Insurance | Total |
|---|---|---|---|---|---|
| 1 | Playmore Recreational Products | ✓ | ✓ | ✓ | TBD |
| 2 | Top Line Recreation | ✓ | ✓ | ✓ | TBD |
| 3 | Rep Services Inc. | ✓ | ✓ | . | TBD |
| 4 | Southern Recreational Inc. | ✓ | ✓ | ✓ | TBD |
| 5 | Bleis Products & Services Inc. | ✓ | ✓ | ✓ | TBD |
| 6 | Swartz Associates | ✓ | ✓ | | TBD |
| 7 | Play Spaces Services Inc | ✓ | ✓ | ✓ | TBD |
| 8 | Advanced Recreational Concepts | | | | |
| 9 | | | | | |
| 10 | | | | | |
| 11 | | | | | |
| 12 | | | | | |
| 13 | | | | | |
| 14 | | | | | |
| 15 | | | | | |

**Staff Assigned to tabulate bids and make recommendations:**

James Householder
Name

facilities maintenance Director
Title

**Recommendations:** Staff will review the bids and present a recommendation to the Finance Committee for subsequent recommendation to the Board. Bids to be evaluated based on evaluation criteria established in bid document.

Bid Opening Witnessed By: Donna Fish
(BCC)

Clerk

Department Representative

**BOARD OF COUNTY COMMISSIONERS**
**MEETING MINUTES**
May 28, 2019
Administration Building,
4th Floor, BCC Meeting Room, 477 Houston Street,
Green Cove Springs, FL 32043
4:00 PM

---

## INVOCATION

Commissioner Rollins

## PLEDGE

Commissioner Hutchings

## CALL TO ORDER

Chairman Cella called the meeting to order at 4:02 P.M.

## ROLL CALL

**Present:** Commissioner District 1 Chairman Mike Cella
Commissioner District 5 Vice Chairman Gayward Hendry
Commissioner District 2 Commissioner Wayne Bolla
Commissioner District 3 Commissioner Diane Hutchings
Commissioner District 4 Commissioner Gavin Rollins

**Absent:** None

**Staff Present:** Acting County Manager Lorin Mock
County Attorney Courtney K. Grimm
Commission Auditor Mike Price
Chief Assistant County Attorney Fran Moss

## A MOMENT IN HISTORY

Vice Chairman Hendry reported of a plane crash that killed nine service men at Thunderbolt Field, piloted by Lt. Commander Lester Key, on June 14, 1951.

## ARTWORK

There was no Artwork on the agenda.

## PET ADOPTIONS

Kelly Kinney, Friends of Clay County Animals, brought two kittens to the meeting and asked for help from those who may want to consider fostering kittens taken to Animal Services.

## APPROVAL OF MINUTES

Commissioner Rollins moved, seconded by Commissioner Hutchings, and carried 5-0, to approve the minutes for the May 14, 2019 and May 20, 2019 BCC meetings.

1. May 14, 2019 BCC Minutes

2. May 20, 2019 BCC Special Meeting Minutes

## PUBLIC COMMENTS

No public comments were received.

## CONSENT AGENDA

Commissioner Rollins moved, seconded by Commissioner Bolla, and carried 5-0, to approve the Consent Agenda as presented.

3. Finance Business

   The Finance Department business is submitted to request approval and ratification by the Board for various warrants and disbursements in order to meet the requirements of Ch. 136.06 (1), Fl Statute. Acceptance and disposal of various Board property and various documents are submitted for the Board's information. At times, approval is requested for various finance related issues.

4. Finance & Audit Committee Business

   Approval of the Finance & Audit Committee Minutes of May 21, 2019.

5. Tourist Development Council Committee Business

   Approval of the March 27, 2019 Tourist Development Council Meeting Minutes.

**FINANCE AND AUDIT COMMITTEE**
**MEETING MINUTES**
May 21, 2019
Administration Building,
4th Floor, BCC Meeting Room, 477 Houston Street,
Green Cove Springs, FL 32043
3:00 PM

---

## PUBLIC COMMENTS

Chairman Hendry called the meeting to order at 3:00 P.M.

Chairman Hendry opened the public comment period.

There were no public comments to be heard.

Chairman Hendry closed the public comment period.

1. Solid Waste Collection Assessment Rate

   Approval of the Solid Waste Collection Assessment rate for Fiscal Year 2019-2020. This rate will be used in the preparation of the Solid Waste Collection Assessement Roll and included in the notice to affected property owners for the upcoming year. Funding Source: Revenue (M. Towns)

   After discussion, Commissioner Gayward Hendry moved, seconded by Commissioner Wayne Bolla, and Carried 2 - 0, to pull for full Board discussion at the May 28th BCC meeting.

2. Bid #18/19-17, Household Hazardous Waste Buildings

   Approval to post notice of intent and award Bid #18/19-17, Household Hazardous Waste Buildings to MCC Development, Inc. at a cost of $233,900.00. Approval will be effective after 72 hour period for protest has expired. Funding Source: 401-3802-562000 (Solid Waste Fund / Environmental Services / Buildings) (M. Towns)

   After discussion, Commissioner Gayward Hendry moved, seconded by Commissioner Wayne Bolla, and Carried 2 - 0, approval to go before the Board on the May 28th Consent Agenda.

3. Florida Department of Veterans' Affairs (FDVA) Memorandum of

Agreement

Approval of the Memorandum of Agreement with the Florida Department of Veterans' Affairs, formalizing the Interlocal relationship as an authorized user of FDVA's VetraSpec technology, for a term to continue until terminated by either party. Funding Source: Not Applicable (T. Nagle)

After discussion, Commissioner Gayward Hendry moved, seconded by Commissioner Wayne Bolla, and Carried 2 - 0, approval to go before the Board on the May 28th Consent Agenda.

4. RFP #18/19-2, Various Equipment and Amenities for Parks and Playgrounds

Approval to post notice of intent and to award RFP No. 18/19-2, Various Equipment and Amenities for Parks and Playgrounds, to multiple companies for a term of three years. All bids are based upon the % discount offered for products and service. This bid is also a means for qualifying vendors for Ball Park lighting services. Qualifying vendors will be requested to provide pricing on a project by project basis based on discount pricing.Approval will be effective after 72 hour bid protest period has expired. Submittals are available for review in the Purchasing Department. Funding Source: 001-3201-546100 (General Fund - Parks & Rec - Repairs & Maint) (J. Householder)

After discussion, Commissioner Gayward Hendry moved, seconded by Commissioner Wayne Bolla, and Carried 2 - 0, approval to go before the Board on the May 28th Consent Agenda.

5. Division of Historical Resources Grant Application for the Clay County Historical Courthouse Building Restoration Project

Approval to apply for a Department of State Historic Preservation Grant funding through the Division of Historical Resources for the Clay County Historical Courthouse Building Restoration Project. The grant requires a 50% match. The application deadline is June 1, 2019. Staff is still in the process of finalizing the grant application. (J. Householder)

James Householder, Director of Facilities & Maintenance, stated that the amount of the grant application is a total of $300,000.00 and that the required 50% County match of $150,000.00 is to be in the FY 19/20 County Budget.

After discussion, Commissioner Gayward Hendry moved, seconded by Commissioner Wayne Bolla, and Carried 2 - 0, approval to go before the Board on the May 28th Consent Agenda.

6. Discussion regarding Agreements related to the SWEAT Program

Discussion regarding the following Agreements related to the SWEAT

## SHELTERS, SHADES & STRUCTURES

| Distributor | Manufacturer | Shelters, Shades, Structures | Discount Allowed from MRSP | Installation Discount | Catalog Provided | Current MSRP List Supplied | Warranty |
|---|---|---|---|---|---|---|---|
| | | | | | | | |
| **Bliss Products (904) 751-0830 dewitt@blissproducts.com** | Alterations & More | Fabrics for shade structues, canopies, and pads | 5% | Priced Per Job | N/A | Request Quote | N/A |
| | CemRock | Artificial Environments | 5% | Priced Per Job | www.cemrock.com | Request Quote | On Website |
| | G & A Manufacturing Inc. | Ramps, Stars, Gangways, Docks, Railings | 5% | Priced Per Job | www.gamanufacturing.com | Request Quote | On Website |
| | Newsome Fence | Fencing | 5% | Priced Per Job | www.newsomfence.com | Request Quote | On Website |
| | Outback Shelters | Shade Structures | 5% | Priced Per Job | N/A | Yes | On Price Sheet |
| | RCP Shelters | Pavilions, Gazebos, Fabric Shades, Concessions | 5% | Priced Per Job | www.rcpshelters.com | Request Quote | On Website |
| | Shade America | Canopies | 10% | Priced Per Job | Yes | Request Quote | In Catolog |
| | Spiral Court King | Spiral Stairs | 5% | Priced Per Job | www.spiralstarsofamerica.com | Request Quote | On Website |
| | Structural Wood Systems | Structural Glued Laminated Timber | 5% | Priced Per Job | www.structuralwood.com | Request Quote | On Website |
| | Superior Shade | Umbrellas, Canopies, Sails | 5% | Priced Per Job | Yes | Yes | In Catolog |
| | Superior Shelters | Shelters, Gazebos, Shades | 5% | Priced Per Job | Yes | Yes | In Catolog |
| | **Manufacturer** | **Product** | **Discount Allowed from MSRP** | **Installation Discount** | **Catalog Provided** | **Current MSRP List Supplied** | **Warranty** |
| **Advanced Recreational Concepts (321) 775-0600 info@arcflorida.com** | Superior Recreation Shades | Domes, Umbrellas, Shades | 5% | 49% | Yes | Digital Copy | Digital Copy |
| | UltraShade | Shade Canopies | 5% | 49% | Yes | Digital Copy | Digital Copy |
| | Icon Shleters | Shade Shelters, Entry Ways, | 5% | 69% | Yes | Digital Copy | Digital Copy |
| | Superior Shelters | Shelters, Gazebos, Shades | 5% | 69% | Yes | Digital Copy | Digital Copy |
| | Cedar Forest Products | Shelters, Bridges, Dugouts, Gazebos | 5% | 69% | Yes | Digital Copy | Digital Copy |
| | Playspace Services | Installation Services | N/A | Per Discount Catalog | Yes | Digital Copy | Digital Copy |

| | Manufacturer | Product | Discount Allowed from MSRP | Installation Discount | Catalog Provided | Current MSRP List Supplied | Warranty |
|---|---|---|---|---|---|---|---|
| **Southern Recreation Inc (904) 387-4390 terry@southernrecreation.com** | SRP Shades | Sails, Shades, Canopies | 5% | 30% | Yes | ?? | Yes |
| | SRP Shelters | Gazebos, Pavilions | 5% | 30% | Yes | ?? | Yes |
| | **Manufacturer** | **Product** | **Discount Allowed from MSRP** | **Installation Discount** | **Catalog Provided** | **Current MSRP List Supplied** | **Warranty** |
| **Miracle Recreation/True North (407) 883-8463 miracle@truenorthrecreation.com** | USA Shade | Shades, Canopies | 5% | N/A | Yes | Yes | Yes |
| | **Manufacturer** | **Product** | **Discount Allowed from MSRP** | **Installation Discount** | **Catalog Provided** | **Current MSRP List Supplied** | **Warranty** |
| **Custom Canopies, Inc (888) 776-3350 ext 1 chrs@customshadecanopies.com** | Custom Canopies Inc. | Sails, Shades, Canopies | 5% | Priced Per Job | Yes | Yes | Yes |
| | **Manufacturer** | **Product** | **Discount Allowed from MSRP** | **Installation Discount** | **Catalog Provided** | **Current MSRP List Supplied** | **Warranty** |
| **Playmore West, Inc (239) 791-2400 info@playmoreonline.com** | USA Shade | Shade Canopies | 5% | 180% | Yes | In Catalog | Yes |
| | Classic Recreation Systems, Inc | Shelters, | 5% | 75% | Yes | In Catalog | Yes |
| | **Manufacturer** | **Product** | **Discount Allowed from MSRP** | **Installation Discount** | **Catalog Provided** | **Current MSRP List Supplied** | **Warranty** |
| **RCP Shelters, Inc (772) 288-3600 info@rcpshelters.com** | RCP Shelters | Pavilions, Gazebos, Fabric Shades, Concessions, | 15% | 175% | Yes | Yes | Yes |
| | **Manufacturer** | **Product** | **Discount Allowed from MSRP** | **Installation Discount** | **Catalog Provided** | **Current MSRP List Supplied** | **Warranty** |
| **Regal Contractors Inc (561) 906-7321 regalcontractorsinc@gmail.com** | Shade Systems Inc | Installation of Shade Structures | N/A | 100% | No | No | No |
| | Apollo Sunguard (Shade) Systems Inc | Installation of Shade Structures | N/A | 110% | No | No | No |
| | RCP Shelters | Installation of Shade Structures | N/A | 150% | No | No | No |
| | Poligon by Porter | Installation of Shade Structures | N/A | 150% | No | No | No |
| | Ball Fabrics | Installation of Shade Structures | N/A | 110% | No | No | No |
| | **Manufacturer** | **Product** | **Discount Allowed from MSRP** | **Installation Discount** | **Catalog Provided** | **Current MSRP List Supplied** | **Warranty** |
| **Top Line Recreation Inc. (386) 575-8359 info@toplinerec.com** | Shade Systems Inc | Shades, Sails | 5% | 125% | Yes | In Catalog | In Catolog |
| | Americana Building Products | Gazebos, Walkway Covers, Roofs | 5% | 100% | Yes | In Catalog | In Catolog |

| | Manufacturer | Product | Discount Allowed from MSRP | Installation Discount | Catalog Provided | Current MSRP List Supplied | Warranty |
|---|---|---|---|---|---|---|---|
| **Playspace Services (321) 775-0600 info@playspaceservices.com** | Cedar Forest Products | Shelters, Bridges, Dugouts, Gazebos Installation | 5% | 69% | Digital Copy | Digital Copy | Digital Copy |
| | SRP Shades | Sails, Shades, Canopies Installation | N/A | 49% | Digital Copy | Digital Copy | Digital Copy |
| | Ultra Shades | Sails, Shades, Canopies Installation | N/A | 49% | Digital Copy | Digital Copy | Digital Copy |
| | Icon Shleters | Shade Shelters, Entry Ways, Installation | N/A | 69% | Digital Copy | Digital Copy | Digital Copy |
| | SRP Shelters | Gazebos, Pavilions Installation | N/A | 69% | Digital Copy | Digital Copy | Digital Copy |
| **Playworx Playsets LLC (386) 697-4426 Tracy@playworx.com** | **Manufacturer** | **Product** | **Discount Allowed from MSRP** | **Installation Discount** | **Catalog Provided** | **Current MSRP List Supplied** | **Warranty** |
| | USA Shade | Shade Canopies | 5% | 75% | No | No | No |
| **Rep Services, Inc (407) 831-9658 nathan@repservices.com** | **Manufacturer** | **Product** | **Discount Allowed from MSRP** | **Installation Discount** | **Catalog Provided** | **Current MSRP List Supplied** | **Warranty** |
| | Skyways Shade | Sails, Shades, Canopies | 2% | 75% | Yes | Yes | Yes |
| | USA Shade | Sails, Shades, Canopies | 2% | 75% | Yes | Yes | Yes |
| | Poligon/Parasol Shade | Gazebos, Shelters, Canopies | 2% | 75% | Yes | Yes | Yes |
| | Porter/Poligon Shelters | Gazebos, Shelters, Canopies | 2% | 75% | Yes | Yes | Yes |
| **Miller Recreation Equipment & Design (941) 792-4580 MRECFLA@TAMPABAY.RR.COM** | **Manufacturer** | **Product** | **Discount Allowed from MSRP** | **Installation Discount** | **Catalog Provided** | **Current MSRP List Supplied** | **Warranty** |
| | USA Shade | Shade Canopies | 5% | N/A | Yes | No | No |
| | RCP Shelters | Pavilions, Gazebos, Fabric Shades, Concessions | 5% | N/A | No | No | No |
| | Coverworx Shelters | Pavilions, Gazebos, Shelters | 5% | N/A | Yes | No | No |

| SITE AMENITIES & FURNISHINGS | | | | | | | |
|---|---|---|---|---|---|---|---|
| **Distributor** | **Manufacturer** | **Site Amenities & Furnishings** | **Discount Allowed from MRSP** | **Installation Discount** | **Catalog Provided** | **Current MSRP List Supplied** | **Warranty** |
| **Bliss Products (904) 751-0830 dewitt@blissproducts.com** | Dero | Bike Racks | 5% | Priced Per Job | Yes | Yes | In Catalog |
| | Doty & Sons Concrete | Concrete Containers, Benches, Tables | 5% | Priced Per Job | www.dotyconcrete.com | Request Quote | On Website |
| | Forte | Plastic Fixtures, Trash Cans, ect | 5% | Priced Per Job | www.forteproducts.com | Request Quote | Yes |
| | GT Grandstands | Bleachers | 10% | Priced Per Job | Yes | Yes | On Website |
| | Jayhawk Plastics/FROG | Tables, Benches, Trash Cans | 10% | 35% | Yes | Yes | In Catalog |
| | Kay Park | Bleachers, Bike Racks, Barriers, Stages, Fountains, ect | 5% | Priced Per Job | www.kaypark.com | Request Quote | On Website |
| | Kings River Casting | Benches, Receptacles, Tables, Bike Racks | 5% | Priced Per Job | www.kingsrivercasting.com | Request Quote | On Website |
| | Most Dependable Fountains | Fountains | 5% | Priced Per Job | Yes | Request Quote | In Catalog |
| | Murdock Fountains | Fountains | 5% | Priced Per Job | Yes | Yes | In Catalog |
| | Ultra Site | Benches, Receptacles, Tables, | 5% | Priced Per Job | Yes | Yes | In Catalog |
| | Wausau International | Banches, Tables, Trash Cans, ect | 5% | Priced Per Job | www.wausaumade.com | Request Quote | On Website |
| | **Manufacturer** | **Product** | **Discount Allowed from MSRP** | **Installation Discount** | **Catalog Provided** | **Current MSRP List Supplied** | **Warranty** |
| **Advanced Recreational Concepts (321) 775-0600 info@arcflorida.com** | Superior Recreational Site Amenities | Tables, Benches, Trash Cans | 2% | 75% | Yes | Digital Copy | Digital Copy |
| | Bison Ameneties | Tables, Benches, Bike Racks, Trash Cans | 2% | 75% | Yes | Digital Copy | Digistal Copy |
| | Playcraft Amenities | Tables, Benches, Bike Racks, Trash Cans | 2% | 75% | Yes | Digital Copy | Digital Copy |
| | Ultrasite Amenities | Tables, Benches, Bike Racks, Trash Cans | 2% | 75% | Yes | Digital Copy | Digital Copy |
| | Park Catalog Amenities | Tables, Benches, Bike Racks, Trash Cans | 2% | 75% | No | Digital Copy | Digital Copy |
| | Paris Amenities | Tables, Benches, Bike Racks, Trash Cans | 2% | 75% | Yes | Digital Copy | Digital Copy |

| | | | | | | | |
|---|---|---|---|---|---|---|---|
| | Kay Park | Bleachers, Bike Racks, Barriers, Stages, Fountains, ect | 2% | 75% | Yes | Digital Copy | Digital Copy |
| | Playspace Services | Installation Services | N/A | Per Discount Catalog | Yes | Digital Copy | Digital Copy |
| | **Manufacturer** | **Product** | **Discount Allowed from MSRP** | **Installation Discount** | **Catalog Provided** | **Current MSRP List Supplied** | **Warranty** |
| **Southern Recreation Inc (904) 387-4390 terry@southernrecreation.com** | SRP Amenities | Tables, Benches, Bike, Racks, Trash Cans | 5% | 30% | Yes | ?? | Yes |
| | Kay Park | Bleachers, Bike Racks, Barriers, Stages, Fountains, ect | 5% | 30% | Yes | ?? | Yes |
| | Ultra Site | Tables, Benches, Bike Racks, Trash Cans | 5% | 30% | Yes | ?? | Yes |
| | **Manufacturer** | **Product** | **Discount Allowed from MSRP** | **Installation Discount** | **Catalog Provided** | **Current MSRP List Supplied** | **Warranty** |
| **Miracle Recreation/True North (407) 883-8463 miracle@truenorthrecreation.com** | Wabash Valley | Tables, Benches, Trash Cans | Tier | Priced Per Job | www.wabashvalley.com | Yes | Yes |
| | **Manufacturer** | **Product** | **Discount Allowed from MSRP** | **Installation Discount** | **Catalog Provided** | **Current MSRP List Supplied** | **Warranty** |
| **Recycled Plastic Factory (941) 473-1618 cgoogins@recycledplasticfactory.com** | Recycled Plastic Factory | Recycled benches, tables, lumber, Parking Curbs | 25% | 15% | N/A | Yes | Yes |
| | **Manufacturer** | **Product** | **Discount Allowed from MSRP** | **Installation Discount** | **Catalog Provided** | **Current MSRP List Supplied** | **Warranty** |
| **Wausau Tile, Inc (863) 816-8070 kprecast@msn.com** | Wausau Tile, Inc | Planters, Benches, Bike Racks | 10% | N/A | Yes | Yes | Yes |
| | **Manufacturer** | **Product** | **Discount Allowed from MSRP** | **Installation Discount** | **Catalog Provided** | **Current MSRP List Supplied** | **Warranty** |
| **Swartz Associates (813)-949-2288 mail@ParkPlayUSA.com** | MyTCoat | Tables, Benches, Bike Racks, Trash Cans | 8% | 35% | Yes | In Catalog | Yes |
| | Frog Furnishings | Tables Benches, Trash Cans, Kiosks | 8% | 35% | Yes | In Catalog | Yes |
| | Kay Park | Bleachers, Bike Racks, Barriers, Stages, Fountains, ect | 6% | 35% | Yes | In Catalog | Yes |
| | SiteScapes Inc. | Tables, Benches, Trash Cans, Bike Racks | 5% | 35% | Yes | In Catalog | Yes |
| | Superior  Site Amenities | Tables, Benches, Bike, Racks, Trash Cans | 8% | 35% | Yes | In Catalog | Yes |
| | Vista Furnishings | Benches, Trash Cans, Bike Racks | 6% | 35% | Yes | In Catalog | Yes |
| | **Manufacturer** | **Product** | **Discount Allowed from MSRP** | **Installation Discount** | **Catalog Provided** | **Current MSRP List Supplied** | **Warranty** |

| | | | | | | | |
|---|---|---|---|---|---|---|---|
| **Dominica Recreation Products (800) 432-0162 robd@gametime.com** | Ultrasite Furnishings | Benches, Bike Racks, Tables, | 5% | 30% | Yes | No | Yes |
| | **Manufacturer** | **Product** | **Discount Allowed from MSRP** | **Installation Discount** | **Catalog Provided** | **Current MSRP List Supplied** | **Warranty** |
| **Playmore West, Inc (239) 791-2400 info@playmoreonline.com** | Wabash Valley | Tables, Benches, Trash Cans | 5% | 32% | Yes | In Catalog | Yes |
| | **Manufacturer** | **Product** | **Discount Allowed from MSRP** | **Installation Discount** | **Catalog Provided** | **Current MSRP List Supplied** | **Warranty** |
| **Regal Contractors Inc (561) 906-7321 regalcontractorsinc@gmail.com** | Ultrasite | Site Furnishing Installation | N/A | 45% | No | No | No |
| | Dumor Site Furnishings | Site Furnishing Installation | N/A | 75% | No | No | No |
| | Wausau Tile, Inc | Site Furnishing Installation | N/A | 100% | No | No | No |
| | **Manufacturer** | **Product** | **Discount Allowed from MSRP** | **Installation Discount** | **Catalog Provided** | **Current MSRP List Supplied** | **Warranty** |
| **Top Line Recreation Inc. (386) 575-8359 info@toplinerec.com** | Premier Polysteel | Benches, Tables, Trash Cans, Bike Racks | 5% | 45% | Yes | In Catalog | In Catalog |
| | Patterson-Williams | Benches, Tables, | 5% | 45% | Yes | In Catalog | In Catalog |
| | Frog Furnishings | Benches, Tables, Trash Cans, | 5% | 45% | Yes | In Catalog | In Catalog |
| | MyTCoat | Benches, Tables, Trash Cans | 5% | 45% | Yes | In Catalog | In Catalog |
| | **Manufacturer** | **Product** | **Discount Allowed from MSRP** | **Installation Discount** | **Catalog Provided** | **Current MSRP List Supplied** | **Warranty** |
| **Playspace Services (321) 775-0600 info@playspaceservices.com** | SRP Amenities | Tables, Benches, Bike, Racks, Trash Cans Installation | N/A | 75% | Digital Copy | Digital Copy | Digital Copy |
| | Bison Ameneties | Tables, Benches, Bike Racks, Trash Cans Installation | N/A | 75% | Digital Copy | Digital Copy | Digital Copy |
| | Playcraft Amenities | Tables, Benches, Bike Racks, Trash Cans Installation | N/A | 75% | Digital Copy | Digital Copy | Digital Copy |
| | Ultrasite Amenities | Tables, Benches, Bike Racks, Trash Cans Installation | N/A | 75% | Digital Copy | Digital Copy | Digital Copy |
| | Park Catalog/Highlands Amenities | Tables, Benches, Bike Racks, Trash Cans Installation | N/A | 75% | Digital Copy | Digital Copy | Digital Copy |
| | Kay Park | Bleachers, Bike Racks, Barriers, Stages, Fountains, Installation | N/A | N/A | Digital Copy | Digital Copy | Digital Copy |

| | | | | | | | |
|---|---|---|---|---|---|---|---|
| | Paris Amenities | Tables, Benches, Bike Racks, Trash Cans Installation | N/A | 75% | Digital Copy | Digital Copy | Digital Copy |
| **Playworx Playsets LLC (386) 697-4426 Tracy@playworx.com** | **Manufacturer** | **Product** | **Discount Allowed from MSRP** | **Installation Discount** | **Catalog Provided** | **Current MSRP List Supplied** | **Warranty** |
| | Wabash Valley | Tables, Benches, Trash Cans | 2.50% | 50% | Yes | In Catalog | Yes |
| **Rep Services, Inc (407) 831-9658 nathan@repservices.com** | **Manufacturer** | **Product** | **Discount Allowed from MSRP** | **Installation Discount** | **Catalog Provided** | **Current MSRP List Supplied** | **Warranty** |
| | Dumor Site Furnishings | Benches, Trash Cans, Bike Racks, Tables | 2% | 50% | Yes | Yes | Yes |
| | Anova Site Furnishings | Tables Benches, Trash Cans, | 2% | 50% | Yes | Yes | Yes |
| **Miller Recreation Equipment & Design (941) 792-4580 MRECFLA@TAMPABAY.RR.COM** | **Manufacturer** | **Product** | **Discount Allowed from MSRP** | **Installation Discount** | **Catalog Provided** | **Current MSRP List Supplied** | **Warranty** |
| | Murdock Fountains | Water Fountains | 5% | 27% | Yes | No | No |
| | Wabash Valley | Tables, Benches, Trash Cans | 5% | 27% | Yes | In Catalog | In Catalog |
| | Recycle Design | Benches | 5% | 27% | Yes | No | No |
| | Kay Park | Bleachers, Bike Racks, Barriers, Stages, Fountains, Installation | 5% | 27% | Yes | No | Yes |
| | Madrax | Bike Lockers | 5% | 27% | www.madrax.com | No | No |

| PLAYGROUND EQUIPMENT & STRUCTURES | | | | | | | |
|---|---|---|---|---|---|---|---|
| Distributor | **Manufacturer** | **Playground Equipment & Structures** | **Discount Allowed from MSRP** | **Installation Discount** | **Catalog Provided** | **Current MSRP List Supplied** | **Warranty** |
| | | | | | | | |
| **Bliss Products (904) 751-0830 dewitt@blissproducts.com** | Action Play | Boarders, Ramp Systems, Mats | 5% | Priced Per Job | Yes | Yes | Varies Per Product |
| | Bark Park | Dog Park Products | 8% | 35% | Yes | Yes | On Price Sheet |
| | Big Toys | Interactive Playgrounds | 5% | 42% | Yes | Yes | On Price Sheet |
| | Dynamo Playgrounds | Innovative Playgrounds | 10% | Priced Per Job | Yes | Yes | In Catalog |
| | Elephant Play | Playgrounds | 10% | 35% | Yes | Yes | In Catalog |
| | Everlast Climbing | Climbing Walls, Jungle Gyms, ect | 10% | Priced Per Job | Yes | Request Quote | In Catalog |
| | Free Note- Harmony Park | Musical Play Equipment | 5% | Priced Per Job | Yes | Yes | On Website |
| | Jensen Swings | Playgournd Swings, Slides | 5% | Priced Per Job | www.jensenswing.com | Yes | On Price Sheet |
| | Play & Park Structures | Playgrounds, Play Structures, Swings | 10% | 42% | Yes | Yes | In Catalog |
| | Safety 1st Surfacing | Expand, Install, Renew, Relocate | 5% | Priced Per Job | www.safetyfirstplayground.com | Request Quote | On Website |
| | Sportsplay | Playground Equip | 5% | Priced Per Job | Yes | Yes | In Catalog |
| | Ultra Play | Playground Equip | 5% | Priced Per Job | Yes | Yes | In Catalog |
| | **Manufacturer** | **Product** | **Discount Allowed from MSRP** | **Installation Discount** | **Catalog Provided** | **Current MSRP List Supplied** | **Warranty** |
| **Advanced Recreational Concepts (321) 775-0600 info@arcflorida.com** | Playcraft Systems | Playground Equip, Tables, Benches, Bike Racks | 2% | 37% | Yes | Digital Copy | Digital Copy |
| | Dynamo Playgrounds | Innovative Playgrounds | 2% | 37% | Yes | Digital Copy | Digital Copy |
| | Free Note- Harmony Park | Musical Play Equipment | 2% | 37% | Yes | Digital Copy | Digital Copy |
| | ID Sculptures | Climb and Play Structures | 2% | 60% | www.idsculpture.com | Digital Copy | Digital Copy |

| | | | | | | | |
|---|---|---|---|---|---|---|---|
| | Superior Recreation Playgrounds | Playground Sets, | 2% | 37% | Yes | Digital Copy | Digital Copy |
| | Childforms | Playground Sets, | 2% | 37% | Yes | Digital Copy | Digital Copy |
| | Ultra Play | Playground Equip, Dog Parks | 2% | 37% | Yes | Digital Copy | Digital Copy |
| | Sportsplay | Playground Equip | 3% | 75% | Yes | Digital Copy | Digital Copy |
| | Playspace Services | Installation Services | N/A | Per Discount Catalog | Yes | Digital Copy | Digital Copy |
| | **Manufacturer** | **Product** | **Discount Allowed from MSRP** | **Installation Discount** | **Catalog Provided** | **Current MSRP List Supplied** | **Warranty** |
| **Southern Recreation Inc (904) 387-4390 terry@southernrecreation.com** | SRP Playgrounds | Playground, Fitness Equip | 5% | 30% | Yes | ?? | Yes |
| | Sportsplay | Playground Equipment, | 5% | 30% | Yes | In Catalog | Yes |
| | Free Note- Harmony Park | Musical Play Equipment | 5% | 30% | Yes | ?? | Yes |
| | Ultra Play | Playground Equip, Dog Parks | 5% | 30% | Yes | ?? | Yes |
| | **Manufacturer** | **Product** | **Discount Allowed from MSRP** | **Installation Discount** | **Catalog Provided** | **Current MSRP List Supplied** | **Warranty** |
| **Miracle Recreation/True North (407) 883-8463 miracle@truenorthrecreation.com** | Miracle/True North | Playground Equipment, | Tier System | 30% | Yes | Yes | Yes |
| | **Manufacturer** | **Product** | **Discount Allowed from MSRP** | **Installation Discount** | **Catalog Provided** | **Current MSRP List Supplied** | **Warranty** |
| **Swartz Associates (813)-949-2288 mail@ParkPlayUSA.com** | Henderson Recreation | Playground Equipment, | 6% | 35% | Yes | In Catalog | Yes |
| | Action Play | Boarders, Ramp Systems, Mats | 10% | 35% | Yes | In Catalog | Yes |
| | Big Toys | Playgrounds, Musical, Benches | 6% | 35% | Yes | In Catalog | Yes |
| | **Manufacturer** | **Product** | **Discount Allowed from MSRP** | **Installation Discount** | **Catalog Provided** | **Current MSRP List Supplied** | **Warranty** |
| **Dominica Recreation Products (800) 432-0162 robd@gametime.com** | GameTime | Playground Equipment, | 10% | 30% | Yes | In Catalog | In Catalog |
| | **Manufacturer** | **Product** | **Discount Allowed from MSRP** | **Installation Discount** | **Catalog Provided** | **Current MSRP List Supplied** | **Warranty** |
| **Rosette Equipment Co. (904) 271-0561 JRose20@comcast.net** | Kidstuff Playstystems | Playground Equpment | 18% | 20% | Yes | No | Yes |

| | Manufacturer | Product | Discount Allowed from MSRP | Installation Discount | Catalog Provided | Current MSRP List Supplied | Warranty |
|---|---|---|---|---|---|---|---|
| **Playmore West, Inc (239) 791-2400 info@playmoreonline.com** | Playworld | Playground Equpment | 5% | 32% | Yes | No | Yes |
| | **Manufacturer** | **Product** | **Discount Allowed from MSRP** | **Installation Discount** | **Catalog Provided** | **Current MSRP List Supplied** | **Warranty** |
| **Dynamo Industries, Inc (613) 446-0030 ivan.hoffmann@dynamoplaygrounds.com** | Dynamo Playgrounds | Playgrounds, | 10% | 45% | Yes | Yes | Yes |
| | Dynamo Playgrounds | Ropes Course | 5% | 42% | Yes | Yes | Yes |
| | Dynamo Playgrounds | Custom Products | 5% | 42% | Yes | Yes | Yes |
| | Dynamo Playgrounds | Nature Play | 5% | 42% | Yes | Yes | Yes |
| | **Manufacturer** | **Product** | **Discount Allowed from MSRP** | **Installation Discount** | **Catalog Provided** | **Current MSRP List Supplied** | **Warranty** |
| **Regal Contractors Inc (561) 906-7321 regalcontractorsinc@gmail.com** | Landscape Structures Inc | Playground Installation | N/A | 40% | No | No | No |
| | Playcore Branded Products | Playground Insallation | N/A | 45% | No | No | No |
| | GameTime | Playground Installation | N/A | 45% | No | No | No |
| | Playworld Systems Inc | Playground Installation | N/A | 40% | No | No | No |
| | Henderson Recreation | Playground Installation | N/A | 45% | No | No | No |
| | Miracle Recreation | Playground Installation | N/A | 45% | No | No | No |
| | PlayPower/Little Tikes | Playground Installation | N/A | 45% | No | No | No |
| | **Manufacturer** | **Product** | **Discount Allowed from MSRP** | **Installation Discount** | **Catalog Provided** | **Current MSRP List Supplied** | **Warranty** |
| **Top Line Recreation Inc. (386) 575-8359 info@toplinerec.com** | BCI Burke Company | Playground Equipment, | 7% | 34% | Yes | In Catalog | In Catalog |
| | **Manufacturer** | **Product** | **Discount Allowed from MSRP** | **Installation Discount** | **Catalog Provided** | **Current MSRP List Supplied** | **Warranty** |
| **Playworx Playsets LLC (386) 697-4426 Tracy@playworx.com** | Little Tikes | Playground Equipment, | 10% | 40% | Yes | In Catalog | Yes |

| | Manufacturer | Product | Discount Allowed from MSRP | Installation Discount | Catalog Provided | Current MSRP List Supplied | Warranty |
|---|---|---|---|---|---|---|---|
| **Rep Services, Inc (407) 831-9658 nathan@repservices.com** | Landscape Structures Inc | Playground Equip | 2% | 50% | Yes | Yes | Yes |
| | **Manufacturer** | **Product** | **Discount Allowed from MSRP** | **Installation Discount** | **Catalog Provided** | **Current MSRP List Supplied** | **Warranty** |
| **Miller Recreation Equipment & Design (941) 792-4580 MRECFLA@TAMPABAY.RR.COM** | Miracle Recreation Equip | Playground Equip | 8-20% | 27% | Yes | Yes | Yes |
| | Action Play | Boarders, Ramp Systems, Mats | 5% | 25% | No | No | No |
| | Elephant Play | Playgrounds | 5% | 25% | No | No | No |
| | Ultra Play | Playground Equip, Dog Parks | 5% | 27% | No | No | No |
| | UPC Parks | Nature Play | 5% | 27% | Yes | No | No |
| | **Manufacturer** | **Product** | **Discount Allowed from MSRP** | **Installation Discount** | **Catalog Provided** | **Current MSRP List Supplied** | **Warranty** |
| **Playspace Services (321) 775-0600 info@playspaceservices.com** | Playcraft Systems | Playground Equiment | N/A | 37% | Digital Copy | Digital Copy | Digital Copy |
| | Dynamo Playgrounds | Playground Equiment | N/A | 37% | Digital Copy | Digital Copy | Digital Copy |
| | SRP R3 | Recycled Playground Equiment | N/A | 37% | Digital Copy | Digital Copy | Digital Copy |
| | Free Note- Harmony Park | Musical Play Equipment | N/A | 37% | Digital Copy | Digital Copy | Digital Copy |
| | ID Sculptures | Climb and Play Structures | N/A | 60% | Digital Copy | Digital Copy | Digital Copy |
| | Childforms | Playground Sets, | N/A | 37% | Digital Copy | Digital Copy | Digital Copy |
| | Ultra Play | Playground Equip, Dog Parks | N/A | 37% | Digital Copy | Digital Copy | Digital Copy |

## SPLASH FEATURES, SKATE PARKS, OUTDOOR RECREATION

| Distributor | Manufacturer | Splash Features, Skate Parks, Outdoor Rec | Discount Allowed from MRSP | Installation Discount | Catalog Provided | Current MSRP List Supplied | Warranty |
|---|---|---|---|---|---|---|---|
| | | | | | | | |
| **Bliss Products (904) 751-0830 dewitt@blissproducts.com** | Compac Filtration | Pads, Structures, Filtration | 5% | Priced Per Job | Yes | Request Quote | Priced Per Job |
| | Spohn Ranch/True Ride | Skate Park | 5% | Priced Per Job | www.spohnranch.com | Request Quote | On Website |
| | Waterworks International | Architectural Fountains, SplashPads | 5% | Priced Per Job | www.waterworksinternational.com | Request Quote | On Website |
| | Zeager | Wood Carpet, Synthetic Turf, | 5% | Priced Per Job | Yes | Request Quote | On Website |
| | **Manufacturer** | **Product** | **Discount Allowed from MSRP** | **Installation Discount** | **Catalog Provided** | **Current MSRP List Supplied** | **Warranty** |
| **Advanced Recreational Concepts (321) 775-0600 info@arcflorida.com** | Water Splash | Splash Parks | 2% | 75% | Yes | Digital Copy | Digital Copy |
| | **Manufacturer** | **Product** | **Discount Allowed from MSRP** | **Installation Discount** | **Catalog Provided** | **Current MSRP List Supplied** | **Warranty** |
| **Playspace Services (321) 775-0600 info@playspaceservices.com** | Water Splash Installation | Splash Parks | N/A | 75% | Digital Copy | Digital Copy | Digital Copy |
| | **Manufacturer** | **Product** | **Discount Allowed from MSRP** | **Installation Discount** | **Catalog Provided** | **Current MSRP List Supplied** | **Warranty** |
| **Rep Services, Inc (407) 831-9658 nathan@repservices.com** | Aquatix | Splash Pads, Water Playgrounds | 2% | Included in price per SF | Yes | Yes | Yes |

## SPORTS & FITNESS EQUIPMENT

| Distributor | Manufacturer | Sports & Fitness Equipment | Discount Allowed from MRSP | Installation Discount | Catalog Provided | Current MSRP List Supplied | Warranty |
|---|---|---|---|---|---|---|---|
| | | | | | | | |
| **Bliss Products (904) 751-0830 dewitt@blissproducts.com** | Athletic Connection | Team Sports, Fitness, Facilties, | 5% | Priced Per Job | Yes | In Catalog | In Catalog |
| | Burbank Netting | Safety Netting | 5% | Priced Per Job | www.burbanksportnets.com | Yes | On Website |
| | Colorado Time Systems | Scoreboards | 5% | Priced Per Job | Yes | Request Quote | On Website |
| | Electro-Mech | Scoreboards | 10% | Priced Per Job | www.electro-mech.com | Yes | On Website |
| | Gared Sports | Team Sports, Fitness, Facilties, | 10% | Priced Per Job | Yes | Yes | On Website |
| | GT Grandstands | Bleachers, Press Boxes, Benches | 10% | Priced Per Job | Yes | Yes | On Website |
| | JayPro Sports | Team Sports, Fitness, Facilties, | 5% | Priced Per Job | Yes | On Website | Varies Per Product |
| | Major Display Scoreboards | Scoreboards | 5% | Priced Per Job | www.majordisplay.com | Yes | On Website |
| | National Recreation Systems | Bleachers, Benches | 5% | Priced Per Job | Yes | Yes | In Catalog |
| | Pro Mats | Netting, Padding, Equipment | 5% | Priced Per Job | Yes | Yes | On Website |
| | Sandee Sod, Inc | (Support Services) | Priced per job | Priced Per Job | N/A | Request Quote | No Website |
| | Sportsplay | Sports Equip | 5% | Priced Per Job | Yes | Yes | In Catalog |
| | Ultra-Action Fitness | Fitness Parks and Equiment | 5% | Priced Per Job | Yes | Yes | In Catalog |
| | **Manufacturer** | **Product** | **Discount Allowed from MSRP** | **Installation Discount** | **Catalog Provided** | **Current MSRP List Supplied** | **Warranty** |
| **Advanced Recreational Concepts (321) 775-0600 info@arcflorida.com** | Sportsplay | Sports Equip | 3% | 75% | Yes | Digital Copy | Digital Copy |
| | Bison Sports | Sports Equip | 3% | 75% | Yes | Digital Copy | Digital Copy |
| | Action Fit | Outdoor Fitness Equip | 3% | 75% | Yes | Digital Copy | Digital Copy |
| | Paris Outdoor Fitness | Outdoor Fitness Equip | 3% | 75% | Yes | Digital Copy | Digital Copy |

| | | | | | | | |
|---|---|---|---|---|---|---|---|
| | JayPro Sports | Sports Equip | 3% | 75% | Yes | Digital Copy | Digital Copy |
| | GT Grandstands | Bleachers, Press Boxes, Benches | 3% | 75% | Yes | Digital Copy | Digital Copy |
| | Playspace Services | Installation Services | N/A | Per Discount Catalog | Yes | Digital Copy | Digital Copy |
| | **Manufacturer** | **Product** | **Discount Allowed from MSRP** | **Installation Discount** | **Catalog Provided** | **Current MSRP List Supplied** | **Warranty** |
| **Swartz Associates (813)-949-2288 mail@ParkPlayUSA.com** | National Recreation Systems | Bleachers, Benches | 6% | 35% | Yes | In Catalog | Yes |
| | JayPro Sports | Team Sports, Fitness, Facilties, | 6% | 35% | Yes | In Catalog | Yes |
| | **Manufacturer** | **Product** | **Discount Allowed from MSRP** | **Installation Discount** | **Catalog Provided** | **Current MSRP List Supplied** | **Warranty** |
| **Rosette Equipment Co. (904) 271-0561 jrose20@comcast.net** | Sportsplay | Sports Equip | 13% | 20% | No | No | ?? |
| | **Manufacturer** | **Product** | **Discount Allowed from MSRP** | **Installation Discount** | **Catalog Provided** | **Current MSRP List Supplied** | **Warranty** |
| **Greenfields Outdoor Fitness Inc (888) 315-9037 sam@greenfieldsfitness.com** | Greenfields Outdoor Fitness | Outdoor Fitness Equipment | 2% | Varies | Yes | Yes | In Catalog |
| | **Manufacturer** | **Product** | **Discount Allowed from MSRP** | **Installation Discount** | **Catalog Provided** | **Current MSRP List Supplied** | **Warranty** |
| **Nevco Sports, LLC (618) 664-0360 sales@nevco.com** | Nevco Sports, LLC | Scoreboards | 10% Minimum | Available upon Request | No | Yes | Yes |
| | **Manufacturer** | **Product** | **Discount Allowed from MSRP** | **Installation Discount** | **Catalog Provided** | **Current MSRP List Supplied** | **Warranty** |
| **Regal Contractors Inc (561) 906-7321 regalcontractorsinc@gmail.com** | Greenfields Outdoor Fitness | Fitness Equipment Installation | N/A | 40% | No | No | No |
| | **Manufacturer** | **Product** | **Discount Allowed from MSRP** | **Installation Discount** | **Catalog Provided** | **Current MSRP List Supplied** | **Warranty** |
| **Musco Sports Lighting LLC (800) 825-6030 musco.contracts@musco.com** | Musco Sports Lighting | Sports Lighting | Prices as listed | / | No | Yes | Yes |
| **Top Line Recreation Inc. (386) 575-8359 info@toplinerec.com** | **Manufacturer** | **Product** | **Discount Allowed from MSRP** | **Installation Discount** | **Catalog Provided** | **Current MSRP List Supplied** | **Warranty** |
| | Burke Fitness | Fitness Course | 7% | 34% | Yes | No | In Catalog |
| | Patterson-Williams Athletics | Sports Equip, Bleachers | 5% | 45% | Yes | In Catalog | In Catalog |
| | **Manufacturer** | **Product** | **Discount Allowed from MSRP** | **Installation Discount** | **Catalog Provided** | **Current MSRP List Supplied** | **Warranty** |
| **Playspace Services (321) 775-0600 info@playspaceservices.com** | Sportsplay | Sports Equip Installation | N/A | 75% | Digital Copy | Digital Copy | Digital Copy |

| | | | | | | | |
|---|---|---|---|---|---|---|---|
| | Bison Sports | Sports Equip Installation | N/A | 75% | Digital Copy | Digital Copy | Digital Copy |
| | Action Fit | Outdoor Fitness Equip Installation | N/A | 75% | Digital Copy | Digital Copy | Digital Copy |
| | Paris Outdoor Fitness | Outdoor Fitness Equip Installation | N/A | 75% | Digital Copy | Digital Copy | Digital Copy |
| | JayPro Sports | Team Sports, Fitness, Facilties, | N/A | 75% | Digital Copy | Digital Copy | Digital Copy |
| | Playcraft Systems | Fitness Equipment | N/A | 37% | Digital Copy | Digital Copy | Digital Copy |
| | GT Grandstands | Bleachers, Press Boxes, Benches | N/A | 75% | Digital Copy | Digital Copy | Digital Copy |
| **Miller Recreation Equipment & Design (941) 792-4580 MRECFLA@TAMPABAY.RR.COM** | **Manufacturer** | **Product** | **Discount Allowed from MSRP** | **Installation Discount** | **Catalog Provided** | **Current MSRP List Supplied** | **Warranty** |
| | Bison Sports | Sports Equip, Bleachers, Padding | 5% | 27% | Yes | No | Yes |
| | Douglas Sports | Sports Equipment | 5% | 27% | Yes | No | No |

| SURFACING | | | | | | | |
|---|---|---|---|---|---|---|---|
| **Distributor** | **Manufacturer** | **Surfacing** | **Discount Allowed from MRSP** | **Installation Discount** | **Catalog Provided** | **Current MSRP List Supplied** | **Warranty** |
| | | | | | | | |
| **Bliss Products (904) 751-0830 dewitt@blissproducts.com** | Dura Play | Safety Surface Systems | 5% | Priced Per Job | Yes | Request Quote | In Catalog |
| | Fibar | Playground Safety Surfaces | 10% | Priced Per Job | Yes | Request Quote | On Website |
| | First Coast Mulch | Mulch, Erosion Control | 5% | Priced Per Job | www.firstcoastmulch.com | Request Quote | On Website |
| | Forestry Resources | Mulches, Sod, Fertilizer, Sod | 5% | Priced Per Job | www.gomulch.com | Request Quote | On Website |
| | Innovative Mulching | Mulch | 10% | Priced Per Job | www.innovativemulching.com | Request Quote | On Website |
| | PlayGuard | Surfacing for Patios, Playgrounds, Play Spaces | 5% | Priced Per Job | www.playguardsurfacing.com | Request Quote | On Website |
| | Playsafe Surfacing | Rubber Surface for playgrounds, play spaces | 5% | Priced Per Job | Yes | Request Quote | On Website |
| | Premier Tennis Courts | Tennis Court Surfacing | 5% | Priced Per Job | No Website | Request Quote | No Website |
| | Rubber Recycling/Playsafer | Recylced Rubber Mulch, Map | 5% | Priced Per Job | Yes | Request Quote | On Website |
| | Sand Lock Sandbox | Sandboxes, Accessories, covers | 5% | Priced Per Job | www.sandlock.com | Request Quote | On Website |
| | Shaw Industries | Carpet, Hardwood, Tile ect | 5% | Priced Per Job | www.shawfloors.com | Request Quote | On Website |
| | Stewart Tennis Courts | Tennis, Bocce, Basketball, Shuffleboard Courts | Priced Per Job | Priced Per Job | www.stewarttennis.com | Request Quote | On Website |
| | Wood Mulch Products | Mulch | 5% | Priced Per Job | www.woodmulchproducts.com | Request Quote | On Website |

| | | | | | | | |
|---|---|---|---|---|---|---|---|
| | Tennis Unlimited | Tennis Court Sufacing | Priced per job | Priced Per Job | N/A | Request Quote | On Website |
| | X-Grass | Syntheitc Turf | 5% | Priced Per Job | Yes | Request Quote | On Website |
| **Advanced Recreational Concepts (321) 775-0600 info@arcflorida.com** | **Manufacturer** | **Product** | **Discount Allowed from MSRP** | **Installation Discount** | **Catalog Provided** | **Current MSRP List Supplied** | **Warranty** |
| | Rubber Designs | Rubber Surface for playgrounds, play spaces | 5% | 5% | Yes | Digital Copy | Digital Copy |
| | Boiling Forest Mulch 4 You and Inovative | Mulch | 5% | 75% | No | Digital Copy | Digital Copy |
| | Polysoft Surfacing | Recreation Surfacing | 2% | 75% | Yes | Digital Copy | Digital Copy |
| | Playspace Services | Installation Services | N/A | Per Discount Catalog | Yes | Digital Copy | Digital Copy |
| **Miracle Recreation/True North (407) 883-8463** | **Manufacturer** | **Product** | **Discount Allowed from MSRP** | **Installation Discount** | **Catalog Provided** | **Current MSRP List Supplied** | **Warranty** |
| | No Fault | Rubber Surface for playgrounds, play | 5% | Priced Per Job | Yes | Yes | Yes |
| | IMC-Nuplay | Rubber Mulch Nuggets | 10% | Priced Per Job | www.imcoutdoorliving.com | Yes | Yes |
| **Swartz Associates (813)-949-2288 mail@ParkPlayUSA.com** | **Manufacturer** | **Product** | **Discount Allowed from MSRP** | **Installation Discount** | **Catalog Provided** | **Current MSRP List Supplied** | **Warranty** |
| | Cowart Mulch | Engineered Wood Mulch | 10% | 60% | Flyer | Attached to Flyer | Yes |
| | International Mulch Co | Recylced Rubber Mulch, | 6% | 50% | Flyer | Attached to Flyer | Yes |
| | USA Mulch | Natural Mulch | 10% | 60% | Flyer | Attached to Flyer | Yes` |
| **Playmore West, Inc (239) 791-2400 info@playmoreonline.com** | **Manufacturer** | **Product** | **Discount Allowed from MSRP** | **Installation Discount** | **Catalog Provided** | **Current MSRP List Supplied** | **Warranty** |
| | Playmore Surfacing | Wood, Rubber Mulch | 5% | varies-see price list | Flyer | Included in Flyer | Yes |

| | Manufacturer | Product | Discount Allowed from MSRP | Installation Discount | Catalog Provided | Current MSRP List Supplied | Warranty |
|---|---|---|---|---|---|---|---|
| **Robertson Industries, Inc/Totturf Safety Surfacing (954) 882-1366 ghaab@totturf.com** | Robertson Industries | Turf, Rubber Tiles, Aquatic Surfacing | 10% | Included in Discount | Yes | Yes | Yes |
| **Playspace Services (321) 775-0600 info@playspaceservices.com** | **Manufacturer** | **Product** | **Discount Allowed from MSRP** | **Installation Discount** | **Catalog Provided** | **Current MSRP List Supplied** | **Warranty** |
| | Boiling Forest Mulch 4 You and Inovative Mulch | Mulch Installation | N/A | 75% | Digital Copy | Digital Copy | Digital Copy |
| | Polysoft Surfacing | Recreation Surfacing Installation | N/A | 75% | Digital Copy | Digital Copy | Digital Copy |
| | Play Space Services | Surfacing Installation | N/A | Per Discount Catalog | Yes | Yes | Yes |
| | Rubber Designs | Rubber Surface for playgrounds, play spaces Installation | 5% or per discount catalog | 5% | Digital Copy | Digital Copy | Digital Copy |
| **Playworx Playsets LLC (386) 697-4426 Tracy@playworx.com** | **Manufacturer** | **Product** | **Discount Allowed from MSRP** | **Installation Discount** | **Catalog Provided** | **Current MSRP List Supplied** | **Warranty** |
| | No Fault Safety Surfacing | Rubber Turf | 2% | Included n SF Price | Flyer | No | Yes |
| | Shawgrass | Syntheitc Turf | 2% | Included in SF Price | Flyer | No | Yes |
| **Rep Services, Inc (407) 831-9658 nathan@repservices.com** | **Manufacturer** | **Product** | **Discount Allowed from MSRP** | **Installation Discount** | **Catalog Provided** | **Current MSRP List Supplied** | **Warranty** |
| | Vitriturf | Cushioned Flooring | 2% | Included in SF Price | Yes | Yes | Yes |
| | No Fault | Rubber Mulch, Synthetic Turf | 2% | 50% | Yes | Yes | Yes |
| | Irvine Wood Recovery | Engineered Wood Mulch | 2% | 50% | Flyer | Yes | Yes |
| | Robertson Recreatonal Surfaces | Rubber Synthetic Turf | 2% | Included in SF Price | Flyer | Yes | Yes |
| | Forever Lawn | Playground Grass | 2% | Included in SF Price | Flyer | Yes | Yes |

| Miller Recreation Equipment & Design<br>(941) 792-4580<br>MRECFLA@TAMPABAY.RR.COM | Manufacturer | Product | Discount Allowed from MSRP | Installation Discount | Catalog Provided | Current MSRP List Supplied | Warranty |
|---|---|---|---|---|---|---|---|
| | Fibar | Ramps, Engineered | 5% | 27% | Yes | No | Yes |
| | Foerverlawn | Sythetic Grass | 5% | 27% | www.foerverlawn.com | No | No |
| | No Fault | Playground and Athletic Surfaces | 5% | N/A | Yes | No | No |

# VILLAGE OF PALM SPRINGS
# PRELIMINARY CAPITAL IMPROVEMENT PROJECT DETAIL

**TASK #** 286

**Project Name:** Lakewood Gardens Park Improvements
**Department:** Parks & Recreation
**Location:** Lakewood Gardens Park

**Project Manager:** Justin Lucas
**Date Requested:** 2/27/20
**Date Approved:** 10/1/20

## DESCRIPTION / JUSTIFICATION:

Village annexed Lakewood Gardens Park in July 2014 from Palm Beach County. The existing park amenities remain the same as when it was acquired. Staff applied for and was awarded a Land Water Conservation Fund Grant in the amount of $400,000 (50-50 matching grant). Future amenities proposed include playground replacement, surfacing, shade, landscaping, resurface basketball court, upgrade volleyball court, picnic facility replacement, water fountain, trash cans and enhance the walking path. Survey and engineering was completed as part of LWCF Grant application. Village staff will serve as GC in order to best utilize project funding.

## PROJECT EXPENDITURES / FUNDING SOURCES:

| PROJECT COSTS: | FY1 | FY2 | FY3 | FY4 | FY5 | FY6 | TOTAL |
|---|---|---|---|---|---|---|---|
| Land/Easement Acquisition | | | | | | | $ 0.00 |
| Site Preparation (clearing,soil testing,permitting,survey) | | | | | | | $ 0.00 |
| Architectural Services | | | | | | | $ 0.00 |
| Engineering Services | 6,000.00 | | | | | | $ 6,000.00 |
| Construction | 394,000.00 | | | | | | $ 394,000.00 |
| Equipment | | | | | | | $ 0.00 |
| Improvement (utility, lightning) | | | | | | | $ 0.00 |
| Other (Specify) | | | | | | | $ 0.00 |
| **TOTAL PROJECT COSTS** | $ 400,000.00 | $ 0.00 | $ 0.00 | $ 0.00 | $ 0.00 | $ 0.00 | $ 400,000.00 |

| SOURCES OF FUNDS: | FY1 | FY2 | FY3 | FY4 | FY5 | FY6 | TOTAL |
|---|---|---|---|---|---|---|---|
| General Fund Revenue CY | 200,000.00 | | | | | | $ 200,000.00 |
| One Cent Sales Tax Funding | | | | | | | $ 0.00 |
| Grant Funding: | | | | | | | |
| CDBG | | | | | | | $ 0.00 |
| FRDAP | | | | | | | $ 0.00 |
| PBC | | | | | | | $ 0.00 |
| Other (Specify) | 200,000.00 | | | | | | $ 200,000.00 |
| W/S Enterprise Fund Revenues | | | | | | | $ 0.00 |
| Stormwater Fund Revenues | | | | | | | $ 0.00 |
| Undetermined | | | | | | | $ 0.00 |
| **TOTAL PROJECT REVENUE** | $ 400,000.00 | $ 0.00 | $ 0.00 | $ 0.00 | $ 0.00 | $ 0.00 | $ 400,000.00 |

## OPERATIONAL IMPACT

| OPERATIONAL IMPACT | FY1 | FY2 | FY3 | FY4 | FY5 | FY6 | TOTAL |
|---|---|---|---|---|---|---|---|
| Additional Revenues | | | | | | | |
| Charges for Services | | | | | | | 0.00 |
| Other Revenues | | | | | | | 0.00 |
| Less Additional Expenditures | | | | | | | |
| New Personnel | | | | | | | 0.00 |
| Maintenance and Other Operating | | | | | | | 0.00 |
| Contracts & Leases | | | | | | | 0.00 |
| **Net Annual Impact on Operations** | $ 0.00 | $ 0.00 | $ 0.00 | $ 0.00 | $ 0.00 | $ 0.00 | $ 0.00 |
| **TOTAL** | $ 0.00 | $ 0.00 | $ 0.00 | $ 0.00 | $ 0.00 | $ 0.00 | **$ 0.00** |

**Department Head**

**Village Manager**

# Village of Palm Springs

# Executive Brief

**AGENDA DATE:** May 13, 2021

**DEPARTMENT:** Public Service

---

**ITEM 6.8:** Approve Carol & Rex Avenue Stormwater Improvements Reconciliation (Change Order No. 1 & Closeout) (Task Order #250) - Public Service Department (FY 2021 Budget Funded - Stormwater Enterprise Fund) - DBF Construction

**SUMMARY:**

On November 12, 2020, the Village Council approved Task Order #250 with DBF Construction, Inc. for the Carol & Rex Ave Stormwater Improvements project in the amount of $279,839.00 for the installation of approximately 1400 linear feet of drainage pipe. There was a need to add a new stormwater collection system on Carol Avenue and Rex Avenue to improve the stormwater conveyance in these areas following years of flooding issues.

The work started on the project on January 28, 2021 and during the initial site excavation the contractor encountered two (2) force mains, one in the utility easement off Carol Avenue and the other on Rex Avenue, that were not indicated on the Village's as-builts, which required field adjustments to relocate the force mains and complete the installation of the new proposed storm pipe (proposed Change Order #1), minimizing the impact to the residents' sewer services. Additionally, sewer laterals (which were also not included on the recorded as-builts) were required to be re-routed from two (2) apartment buildings within the Rex Terrace community to ensure that they did not conflict with the proposed new storm line as well as other additional costs are for material quantity overages for materials needed above the Engineer's estimates. The project was substantially completed and inspected on March 24, 2021, 155 days ahead of schedule, and with minimal punch items identified and completed.

Note: The awarded original contract had no provisions for a contingency, though the project is expected to come in $6,689.04 under budget (final engineering bills have yet to be submitted but are expected to be within the contract amount).

As a result, the Village's Public Service Department is requesting approval of a final

reconciliation change order (Change Order #1) with DRMP in the amount of $37,598.58.

The final reconciliation (close out) for the Carol & Rex Ave Stormwater Improvements contract to DBF Construction is as follows:

| **Work to be Completed** | **Contract Amount** | **Contract Time** |
|---|---|---|
| Original Contract Amount | $ 279,839.00 | 240 |
| Add: Change Order No. 1 | $ 37,598.58 | 0 |
| **Final Revised Contract Amount** | **$ 317,437.58** | **240** |

If approved, the revised total construction cost of the Carol & Rex Ave Stormwater Improvements project within Task Order #250 will be $317,437.58 and the total contract time will be 240 days.

No additional change orders are anticipated for this project. Construction work is complete and, if approved, the contract will be closed out.
The proposed reconciliation (Change Order No. 1 & Close Out) was prepared by DBF Construction, Inc. and reviewed by the Village's Contracted Engineer, Public Service Assistant Director/Engineer, Public Service Project Manager, Village Attorney and Finance Director.

**FISCAL IMPACT:**

Funding to support Carol & Rex Avenue Stormwater Improvements project (Task Order No. 250) was provided within the Stormwater Enterprise Fund:

| ***Allocated/Estimated Project Funding:*** | ***Amount*** |
|---|---|
| FY 2019 Actual - Stormwater Enterprise Fund | $ 6,260.00 |
| FY 2020 Actual - Stormwater Enterprise Fund | $ 33,185.62 |
| FY 2021 Approved Budget - Stormwater Enterprise Fund | $ 354,411.00 |
| **TOTAL ALLOCATED/APPROVED BUDGET:** | **$ 393,856.62** |

| ***Expected Project Costs:*** | ***Amount*** |
|---|---|
| Original Project Award - Design & Engineering - Stormwater Fund (TO #250) | $ 69,730.00 |
| Original Project Bid Award – Construction - Stormwater Fund (TO #250) | $ 279,839.00 |
| Change Order #1 - Construction - Stormwater Fund (TO #250) | $ 37,598.58 |
| **TOTAL REVISED PROJECT COSTS:** | **$ 387,167.58** |

The Village will not expend more than the amount in the approved budget as it may be adopted / approved each year for these goods and services for the term of the contract.

**ATTACHMENTS:**
Proposed Change Order #1 - DBF Construction, Inc.
Agreement - DBF Construction, Inc.

**Change Order No.** 1

| | | | |
|---|---|---|---|
| Date of Issuance: | April 16, 2021 | Effective Date: | |
| Owner: | Village of Palm Springs | Owner's Task Order No.: | 250 |
| Contractor: | DBF Construction | ITB No.: | 2020B-009 |
| Engineer: | DRMP, Inc. | Engineer's Project No.: | 18-0488.001 |
| Project: | Carol & Rex Ave Stormwater Improvements | Work Authorization: | DRMP-G01 |

The Contract is modified as follows upon execution of this Change Order:

**Description:** Performed two (2) force main deflections and sewer service laterals redirected due to conflicts with proposed new storm lines and all associated work. These services were not located on any Village as-builts, therefore it was an unforeseen condition. There were also line item overages from original Engineer estimate that was verified and confirmed in the field (i.e., sod, asphalt, concrete, storm pipe, grouting, and pavers).

**Attachments:** Change order record with line item breakdown.

| CHANGE IN CONTRACT PRICE | CHANGE IN CONTRACT TIMES<br>*[note changes in Milestones if applicable]* |
|---|---|
| Original Contract Price:<br>$ 279,839.00 | Original Contract Times:<br>Substantial Completion: 210<br>Ready for Final Payment: 240<br>**days** or ~~dates~~ |
| [~~Increase~~] [~~Decrease~~] from previously approved Change Orders No. 0 to No. 0:<br>$ 0.00 | [~~Increase~~] [~~Decrease~~] from previously approved Change Orders No. 0 to No. 0:<br>Substantial Completion: 0<br>Ready for Final Payment: 0<br>days |
| Contract Price prior to this Change Order:<br>$ 279,839.00 | Contract Times prior to this Change Order:<br>Substantial Completion: August 26, 2021<br>Ready for Final Payment: September 25, 2021<br>~~days~~ or **dates** |
| [**Increase**] [~~Decrease~~] of this Change Order:<br>$ 37,598.58 | [~~Increase~~] [~~Decrease~~] of this Change Order:<br>Substantial Completion: 0<br>Ready for Final Payment: 0<br>days or dates |
| Contract Price incorporating this Change Order:<br>$317,437.58 | Contract Times with all approved Change Orders:<br>Substantial Completion: August 26, 2021<br>Ready for Final Payment: September 25, 2021<br>~~days~~ or **dates** |

| RECOMMENDED: | ACCEPTED: | ACCEPTED: |
|---|---|---|
| By: | By: | By: |
| Engineer (if required) | Owner (Authorized Signature) | Contractor (Authorized Signature) |
| Title: Project Manager | Title | Title Sr. Project Manager |
| Date: 4/21/2021 | Date | Date 4/21/2021 |

Approved by Funding Agency (if applicable)

By: N/A Date: N/A

Title: N/A

*The CONTRACTOR and the OWNER agree that this CHANGE ORDER represents the complete agreement of the parties with respect to these matters as of the date of this CHANGE ORDER. By approving this Change Order, the CONTRACTOR releases any and all claims that it may have against the OWNER under the subject contract including, but not limited to claims for equitable adjustments, which occurred or accrued prior to the effective date of this CHANGE ORDER except those claims made in writing to the OWNER prior to the effective date of this CHANGE ORDER. The effective date of this Change Order is the date it is approved by the OWNER.*

*This Change Order may be executed in counterparts and is not effective until approved by either the Village Manager or Village Council (as designated on the second page of this Change Order).*

P.R.
Contractor Initial

---

IN WITNESS WHEREOF, the OWNER/VILLAGE has approved this Change Order No. 1 to the Carol & Rex Stormwater Improvements Project on _____, 2020.

**VILLAGE OF PALM SPRINGS, FLORIDA**

By: _____

ATTEST:

_____
, Village Clerk

Approved as to form and legal sufficiency:

_____
Glen J. Torcivia, Village Attorney

**Village of Palm Springs**
ESTIMATE/CHANGE ORDER RECORD

Project: **Carol & Rex Ave Stormwater Improvements**
Plans: **DRMP**

**TASK #** 250
**PO #** 129

DATE: 4/14/2021
PREPARED BY: WS
FILE: DBF Reconciliation Change Order

| Item | Description | Quantity | Unit | Unit Labor | Labor Cost | Unit Mat'l | Material Cost | Unit Vendor | Vendor Cost | Amount | Totals | Comments |
|---|---|---|---|---|---|---|---|---|---|---|---|---|
| | Add' l Work and Closeout Reconciliation | | | | | | | | | | | |
| 1 | **Add' l Work Due to Unforseen Conflicts** | | | | | | | | | | | |
| 2 | Forcemain Deflections | 2 | Ea | | 0 | | 0 | 2,855.15 | $5,710.30 | $5,710.30 | | |
| 3 | Sanitary MH S-10 Modification | 1 | Ea | | 0 | | 0 | 978.00 | $978.00 | $978.00 | | |
| 4 | MH S-10 Coring | 1 | Ea | | 0 | | 0 | 1,011.29 | $1,011.29 | $1,011.29 | | |
| 5 | Conflict Rerouting & Installation of 6" Sewer/Laterals | 180 | Lf | | 0 | | 0 | 50.00 | $9,000.00 | $9,000.00 | | |
| 6 | **SUBTOTAL** | | | | | | | | | | **$16,699.59** | |
| 7 | | | | | | | | | | | | |
| 8 | **Quantity Overages from Contract Amounts** | | | | | | | | | | | |
| 9 | Pay Item #2 - Add' l Inlet Protection | 2 | EA | | 0 | | 0 | 185.00 | $370.00 | $370.00 | | |
| 10 | Pay Item #4 - Add' l Concrete Removal | 4.65 | SY | | 0 | | 0 | 19.25 | $89.51 | $89.51 | | |
| 11 | Pay Item #8 - Add' l Type B Stabilization | 62 | SY | | 0 | | 0 | 3.00 | $186.00 | $186.00 | | |
| 12 | Pay Item #9 - Add' l Base Group | 249 | SY | | 0 | | 0 | 23.50 | $5,851.50 | $5,851.50 | | |
| 13 | Pay Item #10 - Add' l Asphalt | 45 | TN | | 0 | | 0 | 220.00 | $9,900.00 | $9,900.00 | | |
| 14 | Pay Item #14 - Add' l 18" Pipe | (7) | LF | | 0 | | 0 | 87.00 | ($609.00) | ($609.00) | | |
| 15 | Pay Item #15 - Add' l 24" Pipe | 5 | LF | | 0 | | 0 | 103.00 | $515.00 | $515.00 | | |
| 16 | Pay Item #16 - Add' l Pipe Grouting | 2 | CY | | 0 | | 0 | 349.00 | $698.00 | $698.00 | | |
| 17 | Pay Item #19 - Add' l Concrete Sidewalk/Drivewy | 10.65 | SY | | 0 | | 0 | 52.72 | $561.47 | $561.47 | | |
| 18 | Pay Item #20 - Add' l Brick Pavers | (0.60) | SY | | 0 | | 0 | 64.15 | ($38.49) | ($38.49) | | |
| 19 | Pay Item #21 - Add' l Sod | 450 | SY | | 0 | | 0 | 7.50 | $3,375.00 | $3,375.00 | | |
| 20 | **SUBTOTAL** | | | | | | | | | | **$20,898.99** | |
| 21 | | | | | | | | | | | | |
| 22 | | | | | | | | | | | | |
| 23 | | | | | | | | | | | | |
| 24 | | | | | | | | | | | | |
| 25 | | | | | | | | | | | | |
| 26 | | | | | | | | | | | | |
| 27 | | | | | | | | | | | | |
| 28 | | | | | | | | | | | | |
| 29 | | | | | | | | | | | | |
| 30 | | | | | | | | | | | | |
| 31 | | | | | | | | | | | | |
| 32 | | | | | | | | | | | | |
| 33 | | | | | | | | | | | | |
| 34 | | | | | | | | | | | | |
| 35 | | | | | | | | | | | | |
| 36 | | | | | | | | | | | | |
| | Total Cost | | | | $0.00 | | $0.00 | | $37,598.58 | | **$37,598.58** | |

DBF
CONSTRUCTION LLC

3710 Park Central Blvd North
Pompano Beach, FL 33064

## Approved Change Orders:

- Change Order No.1 (2 force main deflections) **$ 5,710.30**
- S-10 modifications from manufacturer invoice **$ 978.00**
- MH Coring **$ 1,011.29**
- 180 LF of 6" PVC at $50 / LF **$ 9,000.00**

***Sub Total:*** **$ 16,699.59**

## Overrun Quantities measured and approved per Ed Horton:

- Pay Item # 2- Inlet Protection System 4 EA @ $ 185.00 = **$ 740.00**
- Pay Item # 4- Removal of Concrete Pavement 18 SY @ $ 19.25 = **$ 346.50**
- Pay Item # 8- Type B Stabilization 62 SY @ $3.00 = **$ 186.00**
- Pay Item # 9- Optional Base Group 249 SY @ $ 23.50 = **$ 5,851.50**
- Pay Item # 10- Asphalt 55 TN @ $ 220.00 = **$ 12,100.00**
- Pay Item # 14- 18" Pipe 6 LF @ $ 87.00 = **$ 522.00**
- Pay Item # 16- Pipe Grouting 2 CY @ $349.00 = **$ 698.00**
- Pay Item 19- Concrete Sidewalk & Driveways 24 SY @ $ 52.72 = **$ 1,265.28**
- Pay Item 20- Pavers 20 SY @ $ 64.15= **$1,283.00**
- Pay Item 21- Sod 1,345 SY @ $ 7.50 = **$ 10,087.50**

***Overrun Sub Total:*** **$ 33,079.78**

# AGREEMENT
# BETWEEN OWNER AND CONTRACTOR
# FOR CONSTRUCTION CONTRACT (STIPULATED PRICE)

THIS AGREEMENT is by and between Village of Palm Springs ("Owner") and DBF Construction, LLC ("Contractor").

Owner and Contractor hereby agree as follows:

**ARTICLE 1 – WORK**

1.01 Contractor shall complete all Work as specified or indicated in the Contract Documents. The Work is generally described as follows:

**ARTICLE 2 – THE PROJECT**

2.01 The Project, of which the Work under the Contract Documents is a part, is generally described as follows: Carol & Rex Avenue Stormwater Improvements

**ARTICLE 3 – ENGINEER**

3.01 The part of the Project that pertains to the Work has been designed by DRMP, Inc.

3.02 The Village Inspector ("Engineer") will act as Owner's representative, assume all duties and responsibilities, and have the rights and authority assigned to Engineer in the Contract Documents in connection with the completion of the Work in accordance with the Contract Documents.

**ARTICLE 4 – CONTRACT TIMES**

*4.01 Time of the Essence*

A. All time limits for Milestones, if any, Substantial Completion, and completion and readiness for final payment as stated in the Contract Documents are of the essence of the Contract.

*4.02 Contract Times: Days*

A. The Work will be substantially completed within 210 days after the date when the Contract Times commence to run as provided in Paragraph 4.01 of the General Conditions, and completed and ready for final payment in accordance with Paragraph 15.06 of the General Conditions within 240 days after the date when the Contract Times commence to run.

*4.03 Liquidated Damages*

A. Contractor and Owner recognize that time is of the essence as stated in Paragraph 4.01 above and that Owner will suffer financial and other losses if the Work is not completed and Milestones not achieved within the times specified in Paragraph 4.02 above, plus any extensions thereof allowed in accordance with the Contract. The parties also recognize the delays, expense, and difficulties involved in proving in a legal or arbitration proceeding the actual loss suffered by Owner if the Work is not completed on time. Accordingly, instead of

requiring any such proof, Owner and Contractor agree that as liquidated damages for delay (but not as a penalty):

1. Substantial Completion: Contractor shall pay Owner $500 for each day that expires after the time (as duly adjusted pursuant to the Contract) specified in Paragraph 4.02.A above for Substantial Completion until the Work is substantially complete.
2. Completion of Remaining Work: After Substantial Completion, if Contractor shall neglect, refuse, or fail to complete the remaining Work within the Contract Times (as duly adjusted pursuant to the Contract) for completion and readiness for final payment, Contractor shall pay Owner $200 for each day that expires after such time until the Work is completed and ready for final payment.
3. Liquidated damages for failing to timely attain Substantial Completion and final completion are not additive and will not be imposed concurrently.

*4.04 Special Damages*

A. In addition to the amount provided for liquidated damages, Contractor shall reimburse Owner (1) for any fines or penalties imposed on Owner as a direct result of the Contractor's failure to attain Substantial Completion according to the Contract Times.

**ARTICLE 5 – CONTRACT PRICE**

5.01 Owner shall pay Contractor for completion of the Work in accordance with the Contract Documents the amounts that follow, subject to adjustment under the Contract:

*A.* For all Work other than Unit Price Work, a lump sum of: $_____.

All specific cash allowances are included in the above price in accordance with Paragraph 13.02 of the General Conditions.

*B.* For all Unit Price Work, an amount equal to the sum of the extended prices (established for each separately identified item of Unit Price Work by multiplying the unit price times the actual quantity of that item):

***(See Unit Price Breakdown in Bid Form 00410 provide at bid time)***

| Unit Price Work | | | | | |
|---|---|---|---|---|---|
| **Item No.** | **Description** | **Unit** | **Estimated Quantity** | **Unit Price** | **Extended Price** |
| | | | | | |
| | | | | | |
| | | | | | |
| | | | | | |
| | | | | | |
| Total of all Extended Prices for Unit Price Work (subject to final adjustment based on actual quantities) | | | | | $279,839.00 |

The extended prices for Unit Price Work set forth as of the Effective Date of the Contract are based on estimated quantities. As provided in Paragraph 13.03 of the General Conditions, estimated quantities are not guaranteed, and determinations of actual quantities and classifications are to be made by Engineer.

C. Total of Lump Sum Amount and Unit Price Work (subject to final Unit Price adjustment) $ 279,839.00 .

D. For all Work, at the prices stated in Contractor's Bid, attached hereto as an exhibit.

**ARTICLE 6 – PAYMENT PROCEDURES**

*6.01 Submittal and Processing of Payments*

A. Contractor shall submit Applications for Payment in accordance with Article 15 of the General Conditions. Applications for Payment will be processed by Engineer as provided in the General Conditions.

*6.02 Progress Payments; Retainage*

A. Owner shall make progress payments on account of the Contract Price on the basis of Contractor's Applications for Payment on or about the 20th day of each month during performance of the Work as provided in Paragraph 6.02.A.1 below, provided that such Applications for Payment have been submitted in a timely manner and otherwise meet the requirements of the Contract. All such payments will be measured by the Schedule of Values established as provided in the General Conditions (and in the case of Unit Price Work based on the number of units completed) or, in the event there is no Schedule of Values, as provided elsewhere in the Contract.

a. Prior to Substantial Completion, progress payments will be made in accordance with Florida Statute 255.078 but, in each case, less the aggregate of payments previously made and less such amounts as Owner may withhold, including but not limited to liquidated damages, in accordance with the Contract.

B. Upon Substantial Completion, Owner shall pay an amount sufficient to increase total payments to Contractor to 100 percent of the Work completed, less such amounts set off by Owner pursuant to Paragraph 15.01.E of the General Conditions, and less 200 percent of Engineer's estimate of the value of Work to be completed or corrected as shown on the punch list of items to be completed or corrected prior to final payment.

*6.03 Final Payment*

A. Upon final completion and acceptance of the Work in accordance with Paragraph 15.06 of the General Conditions, Owner shall pay the remainder of the Contract Price as recommended by Engineer as provided in said Paragraph 15.06.

**ARTICLE 7 – INTEREST**

7.01 All amounts not paid when due shall bear interest at the rate of 1 percent per annum.

**ARTICLE 8 – CONTRACTOR'S REPRESENTATIONS**

8.01 In order to induce Owner to enter into this Contract, Contractor makes the following representations:

A. Contractor has examined and carefully studied the Contract Documents, and any data and reference items identified in the Contract Documents.

B. Contractor has visited the Site, conducted a thorough, alert visual examination of the Site and adjacent areas, and become familiar with and is satisfied as to the general, local, and Site conditions that may affect cost, progress, and performance of the Work.

C. Contractor is familiar with and is satisfied as to all Laws and Regulations that may affect cost, progress, and performance of the Work.

D. Contractor has considered the information known to Contractor itself; information commonly known to contractors doing business in the locality of the Site; information and observations obtained from visits to the Site; the Contract Documents; and the Site-related reports and drawings identified in the Contract Documents, with respect to the effect of such information, observations, and documents on (1) the cost, progress, and performance of the Work; (2) the means, methods, techniques, sequences, and procedures of construction to be employed by Contractor; and (3) Contractor's safety precautions and programs.

E. Based on the information and observations referred to in the preceding paragraph, Contractor agrees that no further examinations, investigations, explorations, tests, studies, or data are necessary for the performance of the Work at the Contract Price, within the Contract Times, and in accordance with the other terms and conditions of the Contract.

F. Contractor is aware of the general nature of work to be performed by Owner and others at the Site that relates to the Work as indicated in the Contract Documents.

G. Contractor has given Engineer written notice of all conflicts, errors, ambiguities, or discrepancies that Contractor has discovered in the Contract Documents, and the written resolution thereof by Engineer is acceptable to Contractor.

H. The Contract Documents are generally sufficient to indicate and convey understanding of all terms and conditions for performance and furnishing of the Work.

I. Contractor's entry into this Contract constitutes an incontrovertible representation by Contractor that without exception all prices in the Agreement are premised upon performing and furnishing the Work required by the Contract Documents.

## ARTICLE 9 – CONTRACT DOCUMENTS

*9.01 Contents*

A. The Contract Documents consist of the following:

1. This Agreement (pages 1 to 11 inclusive).
2. Performance bond (pages 1 to 3 inclusive).
3. Payment bond (pages 1 to 3 inclusive).
4. General Conditions (pages 1 to 65 inclusive).
5. Supplementary Conditions (pages 1 to 10 inclusive).
6. Specifications as listed in the table of contents of the Project Manual.
7. Drawings listed on the attached sheet index.
8. Addenda (numbers 1 to 1, inclusive).
9. Exhibits to this Agreement (enumerated as follows):
    a. Contractor's Bid (pages 1 to 65, inclusive).
10. The following which may be delivered or issued on or after the Effective Date of the Contract and are not attached hereto:
    a. Notice to Proceed.

b. Work Change Directives.

c. Change Orders.

d. Field Orders.

B. The documents listed in Paragraph 9.01.A are attached to this Agreement (except as expressly noted otherwise above).

C. There are no Contract Documents other than those listed above in this Article9.

D. The Contract Documents may only be amended, modified, or supplemented as provided in the General Conditions.

**ARTICLE 10 – MISCELLANEOUS**

*10.01 Terms*

A. Terms used in this Agreement will have the meanings stated in the General Conditions and the Supplementary Conditions.

*10.02 Assignment of Contract*

A. Unless expressly agreed to elsewhere in the Contract, no assignment by a party hereto of any rights under or interests in the Contract will be binding on another party hereto without the written consent of the party sought to be bound; and, specifically but without limitation, money that may become due and money that is due may not be assigned without such consent (except to the extent that the effect of this restriction may be limited by law), and unless specifically stated to the contrary in any written consent to an assignment, no assignment will release or discharge the assignor from any duty or responsibility under the Contract Documents.

*10.03 Successors and Assigns*

A. Owner and Contractor each binds itself, its successors, assigns, and legal representatives to the other party hereto, its successors, assigns, and legal representatives in respect to all covenants, agreements, and obligations contained in the Contract Documents.

*10.04 Severability*

A. Any provision or part of the Contract Documents held to be void or unenforceable under any Law or Regulation shall be deemed stricken, and all remaining provisions shall continue to be valid and binding upon Owner and Contractor, who agree that the Contract Documents shall be reformed to replace such stricken provision or part thereof with a valid and enforceable provision that comes as close as possible to expressing the intention of the stricken provision.

*10.05 Contractor's Certifications*

A. Contractor certifies that it has not engaged in corrupt, fraudulent, collusive, or coercive practices in competing for or in executing the Contract. For the purposes of this Paragraph 10.05:

1. "corrupt practice" means the offering, giving, receiving, or soliciting of any thing of value likely to influence the action of a public official in the bidding process or in the Contract execution;

2. "fraudulent practice" means an intentional misrepresentation of facts made (a) to influence the bidding process or the execution of the Contract to the detriment of Owner, (b) to establish Bid or Contract prices at artificial non-competitive levels, or (c)

to deprive Owner of the benefits of free and open competition;

3. "collusive practice" means a scheme or arrangement between two or more Bidders, with or without the knowledge of Owner, a purpose of which is to establish Bid prices at artificial, non-competitive levels; and

4. "coercive practice" means harming or threatening to harm, directly or indirectly, persons or their property to influence their participation in the bidding process or affect the execution of the Contract.

*10.06 Indemnity*

A. The parties recognize that the CONTRACTOR is an independent contractor. The CONTRACTOR agrees to assume liability for and indemnify, hold harmless, and defend the VILLAGE, its council members, mayor, officers, employees, agents, and attorneys of, from, and against all liability and expense, including reasonable attorney's fees, in connection with any and all claims, demands, damages, actions, causes of action, and suits in equity of whatever kind or nature, including claims for personal injury, property damage, equitable relief, or loss of use, to the extent caused by the negligence, recklessness, or intentionally wrongful conduct of the CONTRACTOR, its agents, officers, Contractors, subcontractors, employees, or anyone else utilized by the CONTRACTOR in the performance of this Contract. The CONTRACTOR's liability hereunder shall include all attorney's fees and costs incurred by the VILLAGE in the enforcement of this indemnification provision. This includes claims made by the employees of the CONTRACTOR against the VILLAGE and the CONTRACTOR hereby waives its entitlement, if any, to immunity under Section 440.11, Florida Statutes. The obligations contained in this provision shall survive termination of this Contract and shall not be limited by the amount of any insurance required to be obtained or maintained under this Contract.

B. Subject to the limitations set forth in this Section, CONTRACTOR shall assume control of the defense of any claim asserted by a third party against the VILLAGE and, in connection with such defense, shall appoint lead counsel, in each case at the CONTRACTOR's expense. The VILLAGE shall have the right, at its option, to participate in the defense of any third party claim, without relieving CONTRACTOR of any of its obligations hereunder. If the CONTRACTOR assumes control of the defense of any third party claim in accordance with this paragraph, the CONTRACTOR shall obtain the prior written consent of the VILLAGE before entering into any settlement of such claim. Notwithstanding anything to the contrary in this Section, the CONTRACTOR shall not assume or maintain control of the defense of any third party claim, but shall pay the fees of counsel retained by the VILLAGE and all expenses, including experts' fees, if (i) an adverse determination with respect to the third party claim would, in the good faith judgment of the VILLAGE, be detrimental in any material respect to the VILLAGE's reputation; (ii) the third party claim seeks an injunction or equitable relief against the VILLAGE; or (iii) the CONTRACTOR has failed or is failing to prosecute or defend vigorously the third party claim. Each party shall cooperate, and cause its agents to cooperate, in the defense or prosecution of any third party claim and shall furnish or cause to be furnished such records and information, and attend such conferences, discovery proceedings, hearings, trials, or appeals, as may be reasonably requested in connection therewith.

C. It is the specific intent of the parties hereto that the foregoing indemnification complies with Section 725.06, Florida Statutes, as amended. CONTRACTOR expressly agrees that it will not claim, and waives any claim, that this indemnification violates Section 725.06, Florida Statues. Nothing contained in the foregoing indemnification shall be construed as a waiver of any immunity or limitation of liability the VILLAGE may have under the doctrine of sovereign immunity or Section 768.28, Florida Statutes.

*10.07 Governing Law and Remedies*

A. The validity of this Agreement and of any of its terms or provisions, as well as the rights and duties of the parties hereunder, shall be governed by the laws of the State of Florida and venue for any and all disputes related to or arising from this Agreement shall be in Palm Beach County, Florida.

B. No remedy herein conferred upon any party is intended to be exclusive of any other remedy, and each and every such remedy shall be cumulative and shall be in addition to every other remedy given hereunder or now or hereafter existing at law or in equity or by statute or otherwise. No single or partial exercise by any party of any right, power, or remedy hereunder shall preclude any other or further exercise thereof.

*10.08 Office of the Inspector General*

A. Palm Beach County has established the Office of the Inspector General, which is authorized and empowered to review past, present, and proposed County programs, contracts, transactions, accounts and records. The Inspector General (IG) has the power to subpoena witnesses, administer oaths, require the production of records, and monitor existing projects and programs. The Inspector General may, on a random basis, perform audits on all Village contracts.

*10.09 Public Records*

A. The CONTRACTOR shall comply with Florida's Public Records Laws, Chapter 119, Florida Statutes, and, if it is acting on behalf of the VILLAGE as provided under section 119.011(2), the CONTRACTOR specifically agrees to:

1. Keep and maintain public records required by the VILLAGE to perform the services under this Agreement.

2. Upon request from the VILLAGE's custodian of public records, provide the VILLAGE with a copy of the requested records or allow the records to be inspected or copied within a reasonable tie at a cost that does not exceed the cost provided in this Chapter 119, Florida Statutes, or as otherwise provided by law.

3. Ensure that said public records that are exempt or confidential and exempt from public records disclosure requirements are not disclosed except as authorized by law for the duration of the Agreement term and following completion of the Agreement, if the CONTRACTOR does not transfer the records to the VILLAGE.

4. Upon the completion of the Agreement, transfer, at no cost, to the VILLAGE all public records in possession of the CONTRACTOR or keep and maintain public records required by the VILLAGE to perform the services. If the CONTRACTOR transfers all public records to the VILLAGE upon completion of the Agreement, the CONTRACTOR shall destroy any duplicate public records that are exempt or confidential and exempt from public records disclosure requirements. If the CONTRACTOR keeps and maintains public records upon completion of the Agreement, the CONTRACTOR shall meet all applicable requirements for retaining public records. All records stored electronically must be provided to the VILLAGE, upon request from the VILLAGE's custodian of public records, in a format that is compatible with the information technology systems of the Village.

**IF THE CONTRACTOR HAS QUESTIONS REGARDING THE APPLICATION OF CHAPTER 119, FLORIDA STATUTES, TO THE CONSULTANT'S DUTY TO PROVIDE PUBLIC RECORDS RELATING TO**

**THIS CONTRACT, CONTACT THE CUSTODIAN OF PUBLIC RECORDS OR DESIGNEE AT 561-434-5084, kwynn@vpsfl.org, OR BY MAIL AT VILLAGE OF PALM SPRINGS, 226 CYPRESS LANE, PALM SPRINGS, FL 33461.**

*10.10 Insurance*

A. The limits of liability for insurance required by Paragraph 6.03 of the General Conditions shall provide coverage for not less that the following amounts or greater where required by Law and Regulations:

1. Workers' Compensation, and related coverages under Paragraphs 6.03.A.1 and A.2 of the General Conditions:

| | | |
|---|---|---|
| a. | State | Statutory |
| b. | Applicable Federal | Statutory |
| c. | Employer Liability: | |
| | Bodily injury, each accident | $1,000,000 |
| | Bodily injury by disease, each employee | $500,000 |
| | Bodily injury/disease aggregate | $1,000,000 |
| d. | Foreign voluntary worker compensation | Statutory |

2. Contractor's Commercial General Liability under Paragraphs 6.03.B and 6.03.C of the General Conditions:

| | | |
|---|---|---|
| a. | General Aggregate | $2,000,000 |
| b. | Products – Completed Operations Aggregate | $2,000,000 |
| c. | Personal and Advertising Injury | $1,000,000 |
| d. | Each Occurrence (Bodily Injury and Property Damage) | $1,000,000 |

3. Automobile Liability under paragraph 6.03.D of the General Conditions:

| | | |
|---|---|---|
| a. | Bodily Injury: | |
| | Each Person | $500,000 |
| | Each Accident | $1,000,000 |
| b. | Property Damage: | |
| | Each Incident | $1,000,000 |

4. Umbrella of Excess Liability under paragraph 6.03.E of the General Conditions:

| | | |
|---|---|---|
| a. | Excess or Umbrella Liability | |
| | 1) General Aggregate | $5,000,000 |
| | 2) Each Occurrence | $1,000,000 |

5. Contractor's Pollution Liability under paragraph 6.03.F of the General Conditions:

| | | |
|---|---|---|
| a. | Contractor's Pollution Liability | |
| | 1) General Aggregate | $2,000,000 |
| | 2) Each Occurrence | $1,000,000 |

6. Additional Insureds include the respective officers, partners, directors, employees, agents, consultants, and subconsultants of the following firms and municipal government(s):

a. Village of Palm Springs

*10.11 Audit By Village*

A. The CONTRACTOR shall permit the VILLAGE, or any authorized representatives of the VILLAGE, at all reasonable times, access to and the right to examine all records, books, papers or documents related to the CONTRACTOR's performance under this Agreement including, but not limited to, expenses for sub-contractors, agents or assistants, direct and indirect charges for work performed and detailed documentation for all such work performed or to be performed under this Agreement.

*10.12 Copies of Data/Documents*

A. Copies or original documents prepared by the CONTRACTOR in relation to work associated with this Agreement shall be provided to the VILLAGE. Data collected, stored, and/or provided shall be in a form acceptable to the VILLAGE and agreed upon by the VILLAGE.

*10.13 Ownership*

A. Each and every report, draft, work product, map, record, and other document reproduced, prepared, or caused to be prepared by the CONTRACTOR pursuant to or in connection with this Agreement shall be the exclusive property of the VILLAGE.

*10.14 Limitations of Liability*

A. Under no circumstances shall either party be liable to the other for any consequential, incidental, special, punitive, or any other form of indirect or non-compensatory damages.

*10.15 Enforcement Costs*

A. All parties shall be responsible for their own attorneys' fees, court costs and expenses if any legal action or other proceeding is brought for any dispute, disagreement, or issue of construction or interpretation arising hereunder whether relating to the Agreement's execution, validity, the obligations provided therein, or performance of this Agreement, or because of an alleged breach, default or misrepresentation in connection with any provisions of this Agreement.

*10.16 Copyrights and/or Patent Rights*

A. CONTRACTOR warrants that there has been no violation of copyrights and/or patent rights in the manufacturing, producing or selling of the goods, shipped or ordered, as a result of this Agreement and the CONTRACTOR agrees to hold the Village harmless from any and all liability, loss, or expense occasioned by any such violation.

*10.17 Protection of Property*

A. The CONTRACTOR shall at all times guard against damage or loss to the property of the VILLAGE or of other vendors or contractors and shall be held responsible for replacing or repairing any such loss or damage. The VILLAGE may withhold payment or make such deductions as deemed necessary to insure reimbursement or replacement for loss or damage to property through negligence of the successful CONTRACTOR or its agents. The CONTRACTOR shall be responsible to safeguard all of their property such as tools and equipment while on site. The VILLAGE will not be held responsible for any loss of CONTRACTOR property due to theft or vandalism.

*10.18 Damage to Persons or Property*

A. The responsibility for all damage to person or property arising out of or on account of Scope of Work done under this Contract shall rest upon the CONTRACTOR.

*10.19 Discrimination*

A. The CONTRACTOR warrants and represents that all of its employees are treated equally

during employment without regard to race, color, religion, disability, sex, age, national origin, ancestry, political affiliation, marital status, handicap, or sexual orientation. Further, CONTRACTOR shall not discriminate or permit discrimination against any employee or an applicant for employment on the basis of race, color, sex, religion, political affiliation, natural origin, ancestry, marital status, sexual orientation or handicap.

*10.20 Construction Defects*

A. PURSUANT TO SECTION 558.005, FLORIDA STATUTES, ANY CLAIMS FOR CONSTRUCTION DEFECTS ARE NOT SUBJECT TO THE NOTICE AND CURE PROVISIONS OF CHAPTER 558, FLORIDA STATUTES.

*10.21 Public Entity Crimes*

A. Contractor acknowledges and agrees that a person or affiliate who has been placed on the convicted vendor list following a conviction for a public entity crime may not submit a bid, proposal, or reply on a contract to provide any goods or services to a public entity; may not submit a bid, proposal, or reply on a contract with a public entity for the construction or repair of a public building or public work; may not submit bids, proposals, or replies on leases of real property to a public entity; may not be awarded or perform work as a contractor, supplier or sub-contractor under a contract with any public entity; and may not transact business with any public entity in excess of the threshold amount provided in Section 287.017, Florida Statues, for CATEGORY TWO for a period of 36 months following the date of being placed on the convicted vendor list. The Contractor will advise the Village immediately if it becomes aware of any violation of this statute.

*10.22 Scrutinized Companies*

A. Contractor certifies that it and its subcontractors are not on the Scrutinized Companies that Boycott Israel List and are not engaged in the boycott of Israel. Pursuant to section 287.135, Florida Statutes, the City may immediately terminate this Agreement at its sole option if the Contractor or any of its subcontractors are found to have submitted a false certification; or if the Contractor or any of its subcontractors, are placed on the Scrutinized Companies that Boycott Israel List or is engaged in the boycott of Israel during the term of this Agreement.

B. If this Agreement is for one million dollars or more, the Contractor certifies that it and its subcontractors are also not on the Scrutinized Companies with Activities in Sudan List, Scrutinized Companies with Activities in the Iran Petroleum Energy Sector List, or engaged in business operations in Cuba or Syria as identified in Section 287.135, Florida Statutes. Pursuant to Section 287.135, the City may immediately terminate this Agreement at its sole option if the Contractor, or any of its subcontractors are found to have submitted a false certification; or if the Contractor or any of its subcontractors are placed on the Scrutinized Companies with Activities in Sudan List, or Scrutinized Companies with Activities in the Iran Petroleum Energy Sector List, or are or have been engaged with business operations in Cuba or Syria during the term of this Agreement.

C. The Contractor agrees to observe the above requirements for applicable subcontracts entered into for the performance of work under this Agreement.

D. The Contractor agrees that the certifications in this section shall be effective and relied upon by the City for the term of this Agreement, including any and all renewals.

E. The Contractor agrees that if it or any of its subcontractors' status changes in regards to any certification herein, the Contractor shall immediately notify the City of the same.

F. As provided in Subsection 287.135(8), Florida Statutes, if federal law ceases to authorize the above-stated contracting prohibitions then they shall become inoperative.

*10.23 E-Verify*

A. Pursuant to Section 448.095(2), Florida Statutes, beginning on January 1, 2021, the CONTRACTOR shall:

1. Register with and use the E-Verify system to verify the work authorization status of all newly hired employees and require all Subcontractors (providing services or receiving funding under this Agreement) to register with and use the E-Verify system to verify the work authorization status of all the Subcontractors' newly hired employees;
2. Secure an affidavit from all Subcontractors (providing services or receiving funding under this Agreement) stating that the Subcontractor does not employ, contract with, or subcontract with an "unauthorized alien" as defined in Section 448.095(1)(k), Florida Statutes;
3. Maintain copies of all Subcontractor affidavits for the duration of this Agreement and provide the same to the Owner upon request;
4. Comply fully, and ensure all of its Subcontractors comply fully, with Section 448.095, Florida Statutes;
5. Be aware that a violation of Section 448.09, Florida Statutes (Unauthorized aliens; employment prohibited) shall be grounds for termination of this Agreement; and,
6. Be aware that if the Owner terminates this Agreement under Section 448.095(2)(c), Florida Statutes, the Contractor may not be awarded a contract for at least 1 year after the date on which the Agreement is terminated and will be liable for any additional costs incurred by the Village as a result of the termination of the Agreement.

IN WITNESS WHEREOF, Owner and Contractor have signed this Agreement.

This Agreement will be effective on 12/10/20 (which is the Effective Date of the Contract).

VILLAGE:

By: _____

Title: Mayor

CONTRACTOR:

By: _____

Title: Vice President

*(Seal)*

Attest: _____

Title: Village Clerk

Attest: _____

Title: Notary Public

Approved as to Form: _____

Title: Village Attorney

Address for giving notices:

226 Cypress Lane

Palm Springs FL, 33461

Address for giving notices:

3710 Park Central Boulevard North

Pompano Beach, FL, 33064

License No.: _____

*(where applicable)*

# BID FORM

## ARTICLE 1 – BID RECIPIENT

1.01 This Bid is submitted to:

***VILLAGE OF PALM SPRINGS***

***C/O Kimberly Wynn, Village Clerk***

***226 Cypress Lane, Palm Springs, FL 33461***

1.02 The undersigned Bidder proposes and agrees, if this Bid is accepted, to enter into an Agreement with Owner in the form included in the Bidding Documents to perform all Work as specified or indicated in the Bidding Documents for the prices and within the times indicated in this Bid and in accordance with the other terms and conditions of the Bidding Documents.

## ARTICLE 2 – BIDDER'S ACKNOWLEDGEMENTS

2.01 Bidder accepts all of the terms and conditions of the Instructions to Bidders, including without limitation those dealing with the disposition of Bid security. This Bid will remain subject to acceptance for 120 days after the Bid opening, or for such longer period of time that Bidder may agree to in writing upon request of Owner.

## ARTICLE 3 – BIDDER'S REPRESENTATIONS

3.01 In submitting this Bid, Bidder represents that:

A. Bidder has examined and carefully studied the Bidding Documents, and any data and reference items identified in the Bidding Documents, and hereby acknowledges receipt of the following Addenda:

| Addendum No. | Addendum, Date |
|---|---|
| 1 | 10/7/2020 |
| | |
| | |
| | |

B. Bidder has visited the Site, conducted a thorough, alert visual examination of the Site and adjacent areas, and become familiar with and satisfied itself as to the general, local, and Site conditions that may affect cost, progress, and performance of the Work.

C. Bidder is familiar with and has satisfied itself as to all Laws and Regulations that may affect cost, progress, and performance of the Work.

D. Bidder has carefully studied all: (1) reports of explorations and tests of subsurface conditions at or adjacent to the Site and all drawings of physical conditions relating to existing surface or subsurface structures at the Site that have been identified in the Supplementary Conditions, especially with respect to Technical Data in such reports and drawings, and (2) reports and drawings relating to Hazardous Environmental Conditions, if any, at or adjacent to the Site that have been identified in the Supplementary Conditions, especially with respect to Technical Data in such reports and drawings.

E. Bidder has considered the information known to Bidder itself; information commonly known to contractors doing business in the locality of the Site; information and observations obtained from visits to the Site; the Bidding Documents; and any Site-related reports and drawings identified in the Bidding Documents, with respect to the effect of such information, observations, and documents on (1) the cost, progress, and performance of the Work; (2) the means, methods, techniques, sequences, and procedures of construction to be employed by Bidder; and (3) Bidder's safety precautions and programs.

F. Bidder agrees, based on the information and observations referred to in the preceding paragraph, that no further examinations, investigations, explorations, tests, studies, or data are necessary for the determination of this Bid for performance of the Work at the price bid and within the times required, and in accordance with the other terms and conditions of the Bidding Documents.

G. Bidder is aware of the general nature of work to be performed by Owner and others at the Site that relates to the Work as indicated in the Bidding Documents.

H. Bidder has given Engineer written notice of all conflicts, errors, ambiguities, or discrepancies that Bidder has discovered in the Bidding Documents, and confirms that the written resolution thereof by Engineer is acceptable to Bidder.

I. The Bidding Documents are generally sufficient to indicate and convey understanding of all terms and conditions for the performance and furnishing of the Work.

J. The submission of this Bid constitutes an incontrovertible representation by Bidder that Bidder has complied with every requirement of this Article, and that without exception the Bid and all prices in the Bid are premised upon performing and furnishing the Work required by the Bidding Documents.

**ARTICLE 4 – BIDDER'S CERTIFICATION**

4.01 Bidder certifies that:

A. This Bid is genuine and not made in the interest of or on behalf of any undisclosed individual or entity and is not submitted in conformity with any collusive agreement or rules of any group, association, organization, or corporation;

B. Bidder has not directly or indirectly induced or solicited any other Bidder to submit a false or sham Bid;

C. Bidder has not solicited or induced any individual or entity to refrain from bidding; and

D. Bidder has not engaged in corrupt, fraudulent, collusive, or coercive practices in competing for the Contract. For the purposes of this Paragraph 4.01.D:

1. "corrupt practice" means the offering, giving, receiving, or soliciting of any thing of value likely to influence the action of a public official in the bidding process;

2. "fraudulent practice" means an intentional misrepresentation of facts made (a) to influence the bidding process to the detriment of Owner, (b) to establish bid prices at artificial non-competitive levels, or (c) to deprive Owner of the benefits of free and open competition;

3. "collusive practice" means a scheme or arrangement between two or more Bidders, with or without the knowledge of Owner, a purpose of which is to establish bid prices at artificial, non-competitive levels; and

4. "coercive practice" means harming or threatening to harm, directly or indirectly, persons or their property to influence their participation in the bidding process or affect the e execution of the Contract.

**ARTICLE 5 – BASIS OF BID**

5.01 Bidder will complete the Work in accordance with the Contract Documents for the following price(s):

**UNIT PRICE BID**

| Item No. | Description | Unit | Estimated Quantity | Bid Unit Price | Bid Price |
|---|---|---|---|---|---|
| 1 | STAKED SILT FENCE, TYPE III | LF | 1119 | $ 3.50 | $ 3,916.50 |
| 2 | INLET PROTECTION SYSTEM | EA | 13 | $ 185.00 | $ 2,405.00 |
| 3 | CLEARING & GRUBBING | AC | 0.639 | $ 7,001.57 | $ 4,474.00 |
| 4 | REMOVAL OF EXISTING CONCRETE PAVEMENT | SY | 188 | $ 19.25 | $ 3,619.00 |
| 5 | MAILBOX, RESET | EA | 10 | $ 130.00 | $ 1,300.00 |
| 6 | REGULAR EXCAVATION | CY | 75 | $ 26.00 | $ 1,950.00 |
| 7 | EMBANKMENT | CY | 7 | $ 52.00 | $ 364.00 |
| 8 | TYPE B STABILIZATION | SY | 899 | $ 3.00 | $ 2,697.00 |
| 9 | OPTIONAL BASE, BASE GRP 08 | SY | 712 | $ 23.50 | $16,732.00 |
| 10 | SUPERPAVE ASPHALTIC CONC, TRAFFIC A | TN | 49.4 | $ 220.00 | $ 10,868.00 |
| 11 | INLETS, DT BOT, TYPE C,<10' | EA | 11 | $ 3,135.00 | $ 34,485.00 |
| 12 | MANHOLES, P-7, <10' | EA | 2 | $ 4,015.00 | $ 8,030.00 |
| 13 | MANHOLES, J-7, <10' | EA | 1 | $ 5,250.00 | $ 5,250.00 |
| 14 | PIPE CULVERT, OPTIONAL MATERIAL, ROUND, 18"S/CD | LF | 1036 | $ 87.00 | $ 90,132.00 |
| 15 | PIPE CULVERT, OPTIONAL MATERIAL, ROUND, 24"S/CD | LF | 352 | $ 103.00 | $ 36,256.00 |
| 16 | PIPE FILLING & PLUGGING - PLACE OUT OF SERVICE | CY | 28 | $ 349.00 | $ 9,772.00 |
| 17 | CONCRETE CURB, TYPE D | LF | 21 | $ 211.00 | $ 4,431.00 |
| 18 | CONCRETE SIDEWALK AND DRIVEWAYS, 4" THICK | SY | 4.1 | $ 880.00 | $ 3,608.00 |
| 19 | CONCRETE SIDEWALK AND DRIVEWAYS, 6" THICK | SY | 181.8 | $ 52.72 | $ 9,584.50 |
| 20 | PAVERS, ARCHITECTURAL, ROADWAY | SY | 185.3 | $ 64.15 | $ 11,887.00 |
| 21 | PERFORMANCE TURF, SOD | SY | 1886 | $ 7.50 | $ 14,145.00 |
| 22 | PAINTED PAVEMENT MARKINGS, STANDARD, WHITE, SOLID, 24" | LF | 21 | $ 58.00 | $ 1,218.00 |
| 23 | PAINTED PAVEMENT MARKINGS, STANDARD, WHITE, ARROWS | EA | 4 | $ 275.00 | $ 1,100.00 |
| 24 | PAINTED PAVEMENT MARKINGS, STANDARD, YELLOW, 6" | LF | 34 | $ 47.50 | $ 1,615.00 |
| | | | | | |
| **Total of All Unit Price Bid Items** | | | | | $279,839.00 |

Bidder acknowledges that (1) each Bid Unit Price includes an amount considered by Bidder to be adequate to cover Contractor's overhead and profit for each separately identified item, and (2) estimated quantities are not guaranteed, and are solely for the purpose of comparison of Bids, and final

payment for all unit price Bid items will be based on actual quantities, determined as provided in the Contract Documents.

**Total Bid Price** $ 279,839.00

Two hundred seventy nine thousand dollars eight hundred thirty nine with zero cents

**ARTICLE 6 – TIME OF COMPLETION**

6.01 Bidder agrees that the Work will be substantially complete within 210 calendar days after the date when the Contract Times commence to run as provided in Paragraph 4.01 of the General Conditions, and will be completed and ready for final payment in accordance with Paragraph 15.06 of the General Conditions within 240 calendar days after the date when the Contract Times commence to run.

6.02 Bidder accepts the provisions of the Agreement as to liquidated damages.

**ARTICLE 7 – ATTACHMENTS TO THIS BID**

7.01 The following documents are submitted with and made a condition of this Bid:

A. Required Bid security;

B. List of Proposed Subcontractors;

C. List of Proposed Suppliers;

D. List of Project References;

E. Evidence of authority to do business in the state of the Project; or a written covenant to obtain such license within the time for acceptance of Bids;

F. Contractor's License No.: CGC1512467 / CUC1224328

G. Required Bidder Qualification Statement with supporting data; and

**ARTICLE 8 – DEFINED TERMS**

8.01 The terms used in this Bid with initial capital letters have the meanings stated in the Instructions to Bidders, the General Conditions, and the Supplementary Conditions.

**ARTICLE 9 – BID SUBMITTAL**

BIDDER: *[Indicate correct name of bidding entity]*

DBF Construction, LLC

By:
*[Signature]* 

*[Printed name]* Mark Giannetti- Vice President

*(If Bidder is a corporation, a limited liability company, a partnership, or a joint venture, attach evidence of authority to sign.)*

Attest:
*[Signature]* 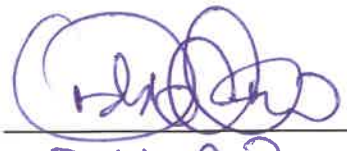

*[Printed name]* Pablo C Rizo

Title: Sr. Project Manager

Submittal Date: 10/13/2020

Address for giving notices:

3710 Park Central Boulevard North ,Pompano Beach, FL, 33064

Telephone Number: 954-532-9869

Fax Number: N/A

Contact Name and e-mail address: Mark Giannetti

Alejandra@dbf-construction.com

Bidder's License No.: CGC1512467 / CUC1224328
*(where applicable)*

*NOTE TO USER: Use in those states or other jurisdictions where applicable or required.*

# BID BOND

Any singular reference to Bidder, Surety, Owner or other party shall be considered plural where applicable.

**BIDDER** *(Name and Address)*:

DBF Construction, LLC.
3710 Park Central Blvd. N.
Pompano Beach, FL 33064

**SURETY** *(Name, and Address of Principal Place of Business)*:

Old Republic Surety Company
445 S. Moreland Road, Ste. 200
Brookfield, WI 53005

**OWNER** *(Name and Address)*:

Village of Palm Springs
226 Cypress Lane
Palm Springs, FL 33461

**BID**

Bid Due Date: October 13, 2020
Description *(Project Name— Include Location)*: Carol & Rex Avenue Stormwater Improvements

**BOND**

Bond Number: N/A
Date: October 13, 2020
Penal sum FIVE PERCENT OF AMOUNT BID ---------- $ (5%)
(Words) (Figures)

Surety and Bidder, intending to be legally bound hereby, subject to the terms set forth below, do each cause this Bid Bond to be duly executed by an authorized officer, agent, or representative.

| **BIDDER** | **SURETY** |
|---|---|
| DBF Construction, LLC (Seal) | Old Republic Surety Company (Seal) |
| Bidder's Name and Corporate Seal | Surety's Name and Corporate Seal |
| By: _____ | By: _____ |
| Signature | Signature (Attach Power of Attorney) |
| Mark Giannetti | Angelo G. Zervos |
| Print Name | Print Name |
| V.P. | Attorney-in-Fact |
| Title | Title |
| Attest: _____ | Attest: _____ |
| Signature | Signature Shannon Bakka |
| Title Secretary | Title Bond Coordinator |

*Note: Addresses are to be used for giving any required notice.*
*Provide execution by any additional parties, such as joint venturers, if necessary.*

# OLD REPUBLIC SURETY COMPANY

## POWER OF ATTORNEY

KNOW ALL MEN BY THESE PRESENTS: That OLD REPUBLIC SURETY COMPANY, a Wisconsin stock insurance corporation, does make, constitute and appoint:

GUS E. ZERVOS, STEPHEN M. ZERVOS, DAVID C. LANGE, ANGELO G. ZERVOS, MICHAEL G. ZERVOS, DONALD W. BURDEN, OF SOUTHFIELD, MI

its true and lawful Attorney(s)-in-Fact, with full power and authority, for and on behalf of the company as surety, to execute and deliver and affix the seal of the company thereto (if a seal is required), bonds, undertakings, recognizances or other written obligations in the nature thereof, (other than bail bonds, bank depository bonds, mortgage deficiency bonds, mortgage guaranty bonds, guarantees of installment paper and note guaranty bonds, self-insurance workers compensation bonds guaranteeing payment of benefits, asbestos abatement contract bonds, waste management bonds, hazardous waste remediation bonds or black lung bonds), as follows:

ALL WRITTEN INSTRUMENTS

and to bind OLD REPUBLIC SURETY COMPANY thereby, and all of the acts of said Attorneys-in-Fact, pursuant to these presents, are ratified and confirmed. This appointment is made under and by authority of the board of directors at a special meeting held on February 18, 1982. This Power of Attorney is signed and sealed by facsimile under and by the authority of the following resolutions adopted by the board of directors of the OLD REPUBLIC SURETY COMPANY on February 18, 1982.

RESOLVED that, the president, any vice-president, or assistant vice president, in conjunction with the secretary or any assistant secretary, may appoint attorneys-in-fact or agents with authority as defined or limited in the instrument evidencing the appointment in each case, for and on behalf of the company to execute and deliver and affix the seal of the company to bonds, undertakings, recognizances, and suretyship obligations of all kinds; and said officers may remove any such attorney-in-fact or agent and revoke any Power of Attorney previously granted to such person.

RESOLVED FURTHER, that any bond, undertaking, recognizance, or suretyship obligation shall be valid and binding upon the Company
(i) when signed by the president, any vice president or assistant vice president, and attested and sealed (if a seal be required) by any secretary or assistant secretary; or
(ii) when signed by the president, any vice president or assistant vice president, secretary or assistant secretary, and countersigned andsealed (if a seal be required) by a duly authorized attorney-in-fact or agent; or
(iii) when duly executed and sealed (if a seal be required) by one or more attorneys-in-fact or agents pursuant to and within the limits ofthe authority evidenced by the Power of Attorney issued by the company to such person or persons.

RESOLVED FURTHER, that the signature of any authorized officer and the seal of the company may be affixed by facsimile to any Power of Attorney or certification there of authorizing the execution and delivery of any bond, undertaking, recognizance, or other suretyship obligations of the company; and such signature and seal when so used shall have the same force and effect as though manually affixed.

IN WITNESS WHEREOF, OLD REPUBLIC SURETY COMPANY has caused these presents to be signed by its proper officer, and its corporate seal to be affixed this 12TH day of MAY, 2020.

OLD REPUBLIC SURETY COMPANY

Karen J. Haffner
Assistant Secretary

OLD REPUBLIC SURETY COMPANY CORPORATE SEAL 1981

Alan Pavlic
President

STATE OF WISCONSIN, COUNTY OF WAUKESHA-SS

On this 12TH day of MAY, 2020, personally came before me, Alan Pavlic and Karen J Haffner, to me known to be the individuals and officers of the OLD REPUBLIC SURETY COMPANY who executed the above instrument, and they each acknowledged the execution of the same, and being by me duly sworn, did severally depose and say; that they are the said officers of the corporation aforesaid, and that the seal affixed to the above instrument is the seal of the corporation, and that said corporate seal and their signatures as such officers were duly affixed and subscribed to the said instrument by the authority of the board of directors of said corporation.

KATHRYN R. PEARSON NOTARY PUBLIC STATE OF WI

Kathryn R. Pearson
Notary Public

My commission expires: 9/28/2022

(Expiration of notary commission does not invalidate this instrument)

CERTIFICATE

I, the undersigned, assistant secretary of the OLD REPUBLIC SURETY COMPANY, a Wisconsin corporation, CERTIFY that the foregoing and attached Power of Attorney remains in full force and has not been revoked; and furthermore, that the Resolutions of the board of directors set forth in the Power of Attorney, are now in force.

46-5195

OLD REPUBLIC SURETY COMPANY CORPORATE SEAL 1981

Signed and sealed at the City of Brookfield, WI this 13TH day of OCTOBER, 2020.

Karen J. Haffner
Assistant Secretary

ZERVOS GROUP, INC.

SECTION 00431
TABULATION OF SUBCONTRACTORS AND SUPPLIERS

The Undersigned states that the following is a full and complete list of the proposed subcontractors and suppliers on this Project and the class of work to be performed by each and that such list will not be added to nor altered without written consent to the Owner through the Engineer.

| | **SUBCONTRACTOR OR SUPPLIER AND ADDRESS** | **CLASS OF WORK OR MATERIAL** |
|---|---|---|
| (1) | Rinker Materials Concrete Pipe<br>13100 NW 118th Ave, Medley, FL, 33178 | Concrete Pipe |
| (2) | Concrete Products<br>460 Sam Cooper Way, Riviera Beach, FL 33404 | Structure |
| (3) | Core & Main<br>4310 NW 10th Ave, Oakland Park, FL 33309 | Pipe, Fittings, HDPE pipe |
| (4) | | |
| (5) | | |
| (6) | | |
| (7) | | |

BIDDER: DBF Construction, LLC

By: 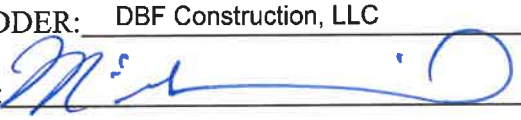

Name: Mark Giannetti

Title: Vice President

Date: 10/12/2020

SECTION 00440
FLORIDA TRENCH SAFETY ACT CERTIFICATION

The Bidder acknowledges that included in the various items of the proposal and in the Total Bid Price are costs for complying with the most current version of the Florida Trench Safety Act (90-96, Laws of Florida). The Bidder further identifies the costs to be summarized below:

| | Cost |
|---|---|
| 1. Trench Safety Act Compliance | $ 10,000.00 |
| 2. Special Shoring | $ 2,000.00 |

Identify method of compliance for Item #1: Safety Training, personal protective equipment enmet gas detection.

Identify or attach a copy of Special Shoring Requirements for Item #2: Efficiency trench shield stacking sections.

The undersigned certifies that he/she is the Contractor who will perform the trench excavation for this project and hereby gives written assurance that Contractor will comply with the applicable trench safety standards specifically set forth in Florida's Trench Safety Act (90-96, Laws of Florida).

BIDDER: DBF Construction, LLC

By: _____

Name: Mark Giannetti

Title: Vice President

Sworn to and subscribed before me this 12th day of October, 20 20.

_____
Notary Public

ALEJANDRA VILLATORO
MY COMMISSION # GG 919201
EXPIRES: October 2, 2023
Bonded Thru Notary Public Underwriters

My Commission Expires: 10/02/2023

# QUALIFICATIONS STATEMENT

**THE INFORMATION SUPPLIED IN THIS DOCUMENT IS CONFIDENTIAL TO THE EXTENT PERMITTED BY LAWS AND REGULATIONS**

1. **SUBMITTED BY:**

   Official Name of Firm: DBF Construction, LLC

   Address: 3710 Park Central Boulevard North ,Pompano Beach, FL, 33064

2. **SUBMITTED TO:** Village of Palm Springs

3. **SUBMITTED FOR:** Carol & Rex Avenue Stormwater Improvements

   Owner: Village of Palm Springs

   Project Name: Carol & Rex Avenue Stormwater Improvements

   **TYPE OF WORK:** Open cut utility installation

4. **CONTRACTOR'S CONTACT INFORMATION**

   Contact Person: Mark Giannetti

   Title: Vice President

   Phone: 954-532-9869

   Email: Alejandra@dbf-construction.com


Copyright © 2013 National Society of Professional Engineers, American Council of Engineering Companies, and American Society of Civil Engineers. All rights reserved.

5. **AFFILIATED COMPANIES:**

Name: N/A

Address:

6. **TYPE OF ORGANIZATION:**

☐ SOLE PROPRIETORSHIP

Name of Owner:

Doing Business As:

Date of Organization:

☐ PARTNERSHIP

Date of Organization:

Type of Partnership:

Name of General Partner(s):

☑ CORPORATION

State of Organization: Florida

Date of Organization: 7/2013

Executive Officers:

- President: Richard L Gibbs III
- Vice President(s): Mark Giannetti
- Treasurer:
- Secretary: Jeffrey Melnechuck


Copyright © 2013 National Society of Professional Engineers, American Council of Engineering Companies, and American Society of Civil Engineers. All rights reserved.

☐ LIMITED LIABILITY COMPANY

State of Organization: _____

Date of Organization: _____

Members: _____

_____

_____

_____

☐ JOINT VENTURE

Sate of Organization: _____

Date of Organization: _____

Form of Organization: _____

Joint Venture Managing Partner

- Name: _____

- Address: _____

_____

_____

Joint Venture Managing Partner

- Name: _____

- Address: _____

_____

Joint Venture Managing Partner

- Name: _____

- Address: _____

_____


Copyright © 2013 National Society of Professional Engineers, American Council of Engineering Companies, and American Society of Civil Engineers. All rights reserved.

## 7. LICENSING

Jurisdiction: Florida

Type of License: General Contractor License

License Number: CGC1512467

Jurisdiction: Florida

Type of License: Underground Contractor License

License Number: CUC1224328

## 8. CERTIFICATIONS

CERTIFIED BY:

Disadvantage Business Enterprise: N/A

Minority Business Enterprise:

Woman Owned Enterprise:

Small Business Enterprise:

Other (_____):

## 9. BONDING INFORMATION

Bonding Company: Old Republic Surety Company

Address: 445 S. Moreland Road, Ste. 200, Brookfield, WI 53005

Bonding Agent: Zervos Group

Address: 24724 Farmbrook Rd Ste 200 Southfield, MI 48034

Contact Name: Angelo Zervos

Phone: 800-201-1217- Ext 5378

Aggregate Bonding Capacity: $ 10,000,000.00

Available Bonding Capacity as of date of this submittal: $ 9,000,000.00


Copyright © 2013 National Society of Professional Engineers, American Council of Engineering Companies, and American Society of Civil Engineers. All rights reserved.

## 10. FINANCIAL INFORMATION

Financial Institution: Wells Fargo

Address: 2200 W Atlantic Blvd, Pompano Beach, FL, 33069

Account Manager: Lola Bramwell

Phone: 954-974-1122

INCLUDE AS AN ATTACHMENT AN AUDITED BALANCE SHEET FOR EACH OF THE LAST 3 YEARS Please attached.

## 11. CONSTRUCTION EXPERIENCE:

Current Experience:

List on **Schedule A** all uncompleted projects currently under contract (If Joint Venture list each participant's projects separately).

Previous Experience:

List on **Schedule B** all projects completed within the last 5 Years (If Joint Venture list each participant's projects separately).

Has firm listed in Section 1 ever failed to complete a construction contract awarded to it?

☐ YES ☑ NO

If YES, attach as an Attachment details including Project Owner's contact information.

Has any Corporate Officer, Partner, Joint Venture participant or Proprietor ever failed to complete a construction contract awarded to them in their name or when acting as a principal of another entity?

☐ YES ☑ NO

If YES, attach as an Attachment details including Project Owner's contact information.

Are there any judgments, claims, disputes or litigation pending or outstanding involving the firm listed in Section 1 or any of its officers (or any of its partners if a partnership or any of the individual entities if a joint venture)?

☐ YES ☑ NO

If YES, attach as an Attachment details including Project Owner's contact information.


Copyright © 2013 National Society of Professional Engineers, American Council of Engineering Companies, and American Society of Civil Engineers. All rights reserved.

## 12. SAFETY PROGRAM:

Name of Contractor's Safety Officer: Spencer Mart

Include the following as attachments:

Provide as an Attachment Contractor's (and Contractor's proposed Subcontractors and Suppliers furnishing or performing Work having a value in excess of 10 percent of the total amount of the Bid) OSHA No. 500- Log & Summary of Occupational Injuries & Illnesses for the past 5 years.

Provide as an Attachment Contractor's (and Contractor's proposed Subcontractors and Suppliers furnishing or performing Work having a value in excess of 10 percent of the total amount of the Bid) list of all OSHA Citations & Notifications of Penalty (monetary or other) received within the last 5 years (indicate disposition as applicable) - IF NONE SO STATE.

Provide as an Attachment Contractor's (and Contractor's proposed Subcontractors and Suppliers furnishing or performing Work having a value in excess of 10 percent of the total amount of the Bid) list of all safety citations or violations under any state all received within the last 5 years (indicate disposition as applicable) - IF NONE SO STATE.

Provide the following for the firm listed in Section V (and for each proposed Subcontractor furnishing or performing Work having a value in excess of 10 percent of the total amount of the Bid) the following (attach additional sheets as necessary):

Workers' compensation Experience Modification Rate (EMR) for the last 5 years:

| | | | |
|---|---|---|---|
| YEAR | 2020 | EMR | 0.91 |
| YEAR | 2019 | EMR | 0.72 |
| YEAR | 2018 | EMR | 0.74 |
| YEAR | 2017 | EMR | 0.78 |
| YEAR | 2016 | EMR | 0.85 |

Total Recordable Frequency Rate (TRFR) for the last 5 years:

| | | | |
|---|---|---|---|
| YEAR | 2020 | TRFR | 0 |
| YEAR | 2019 | TRFR | 0 |
| YEAR | 2018 | TRFR | 10.69 |
| YEAR | 2017 | TRFR | 0 |
| YEAR | 2016 | TRFR | 0 |


Copyright © 2013 National Society of Professional Engineers, American Council of Engineering Companies, and American Society of Civil Engineers. All rights reserved.

Total number of man-hours worked for the last 5 Years:

| | | | |
|---|---|---|---|
| YEAR | 2015 | TOTAL NUMBER OF MAN-HOURS | 48,000 |
| YEAR | 2016 | TOTAL NUMBER OF MAN-HOURS | 50,000 |
| YEAR | 2017 | TOTAL NUMBER OF MAN-HOURS | 62,000 |
| YEAR | 2018 | TOTAL NUMBER OF MAN-HOURS | 63,000 |
| YEAR | 2019 | TOTAL NUMBER OF MAN-HOURS | 65,000 |

Provide Contractor's (and Contractor's proposed Subcontractors and Suppliers furnishing or performing Work having a value in excess of 10 percent of the total amount of the Bid) Days Away From Work, Days of Restricted Work Activity or Job Transfer (DART) incidence rate for the particular industry or type of Work to be performed by Contractor and each of Contractor's proposed Subcontractors and Suppliers) for the last 5 years:

| | | | |
|---|---|---|---|
| YEAR | 2020 | DART | 0 |
| YEAR | 2019 | DART | 0 |
| YEAR | 2018 | DART | 0 |
| YEAR | 2017 | DART | 0 |
| YEAR | 2016 | DART | 0 |

**13. EQUIPMENT:**

MAJOR EQUIPMENT:

List on **Schedule C** all pieces of major equipment available for use on Owner's Project.

See equipment list attached.


Copyright © 2013 National Society of Professional Engineers, American Council of Engineering Companies, and American Society of Civil Engineers. All rights reserved.

I HEREBY CERTIFY THAT THE INFORMATION SUBMITTED HEREWITH, INCLUDING ANY ATTACHMENTS, IS TRUE TO THE BEST OF MY KNOWLEDGE AND BELIEF.

NAME OF ORGANIZATION: DBF Construction, LLC

BY: 

TITLE: Mark Giannetti

DATED: 10/12/2020

NOTARY ATTEST:

SUBSCRIBED AND SWORN TO BEFORE ME

THIS 12th DAY OF October, 20 20

NOTARY PUBLIC - STATE OF Florida

MY COMMISSION EXPIRES: 10/02/2023

REQUIRED ATTACHMENTS

1. Schedule A (Current Experience). See attached
2. Schedule B (Previous Experience). See attached
3. Schedule C (Major Equipment). See attached
4. Audited balance sheet for each of the last 3 years for firm named in Section 1. See attached
5. Evidence of authority for individuals listed in Section 7 to bind organization to an agreement. See attached
6. Resumes of officers and key individuals (including Safety Officer) of firm named in Section 1. See attached
7. Required safety program submittals listed in Section 13. See attached
8. Additional items as pertinent.


Copyright © 2013 National Society of Professional Engineers, American Council of Engineering Companies, and American Society of Civil Engineers. All rights reserved.

## SCHEDULE A

CURRENT EXPERIENCE

| Project Name | Owner's Contact Person | Design Engineer | Contract Date | Type of Work | Status | Cost of Work |
|---|---|---|---|---|---|---|
| See current contract list attached. | Name:<br>Address:<br>Telephone: | Name:<br>Company:<br>Telephone: | | | | |
| | Name:<br>Address:<br>Telephone: | Name:<br>Company:<br>Telephone: | | | | |
| | Name:<br>Address:<br>Telephone: | Name:<br>Company:<br>Telephone: | | | | |
| | Name:<br>Address:<br>Telephone: | Name:<br>Company:<br>Telephone: | | | | |
| | Name:<br>Address:<br>Telephone: | Name:<br>Company:<br>Telephone: | | | | |
| | Name:<br>Address:<br>Telephone: | Name:<br>Company:<br>Telephone: | | | | |
| | Name:<br>Address:<br>Telephone: | Name:<br>Company:<br>Telephone: | | | | |


Copyright © 2013 National Society of Professional Engineers, American Council of Engineering Companies, and American Society of Civil Engineers. All rights reserved.

## SCHEDULE B

PREVIOUS EXPERIENCE (Include ALL Projects Completed within last 5 years)

| Project Name | Owner's Contact Person | Design Engineer | Contract Date | Type of Work | Status | Cost of Work |
|---|---|---|---|---|---|---|
| See previous experience attached | Name:<br>Address:<br>Telephone: | Name:<br>Company:<br>Telephone: | | | | |
| | Name:<br>Address:<br>Telephone: | Name:<br>Company:<br>Telephone: | | | | |
| | Name:<br>Address:<br>Telephone: | Name:<br>Company:<br>Telephone: | | | | |
| | Name:<br>Address:<br>Telephone: | Name:<br>Company:<br>Telephone: | | | | |
| | Name:<br>Address:<br>Telephone: | Name:<br>Company:<br>Telephone: | | | | |
| | Name:<br>Address:<br>Telephone: | Name:<br>Company:<br>Telephone: | | | | |
| | Name:<br>Address:<br>Telephone: | Name:<br>Company:<br>Telephone: | | | | |


Copyright © 2013 National Society of Professional Engineers, American Council of Engineering Companies, and American Society of Civil Engineers. All rights reserved.

SCHEDULE C - LIST OF MAJOR EQUIPMENT AVAILABLE

| ITEM | PURCHASE DATE | CONDITION | ACQUIRED VALUE |
|---|---|---|---|
| See equipment list attached. | | | |
| | | | |
| | | | |
| | | | |
| | | | |
| | | | |
| | | | |
| | | | |
| | | | |
| | | | |
| | | | |
| | | | |
| | | | |
| | | | |
| | | | |
| | | | |
| | | | |
| | | | |
| | | | |

EJCDC® C-451, Qualifications Statement.
Copyright © 2013 National Society of Professional Engineers, American Council of Engineering Companies,
and American Society of Civil Engineers. All rights reserved.

SECTION 00452
BIDDER'S STATEMENT OF DISPUTES, LITIGATION,
ARBITRATION, AND SURETY COMPLETION
LAST THREE (3) YEARS

| PROJECT | NAME AND ADDRESS OF OWNER OR ENGINEER | NAME AND PHONE OF OWNER OR ENGINEER REPRESENTATIVE | DATE OF CONTRACT | AMOUNT | STATUS |
|---|---|---|---|---|---|

NONE

(Signed)_____

SECTION 00453

NONCOLLUSION AFFIDAVIT

TO: The **Village of Palm Springs**, herein called the "Owner."

Pursuant to bidding requirements for the work titled "**Carol & Rex Avenue Stormwater Improvements**,"

the enclosed contract documents shall be provided to the Owner.

State of Florida

County of Broward

Mark Giannetti, being first duly
(Officer's Name)

sworn, deposes, and says that:

A. He\She is Vice President (officer's title) of DBF Construction, LLC (company name), the Bidder that has submitted the attached bid;

B. He\She is fully informed respecting the preparation and contents of the attached bid and of all pertinent circumstances respecting such bid;

C. Such bid is genuine and is not a collusive or sham bid;

D. Neither the said Bidder nor any of its officers, partners, owners, agents, representatives, employees, or parties in interest, including this affiant, has in any way colluded, conspired, connived, or agreed, directly or indirectly with any other Bidder, firm, or person to submit a collusive or sham bid in connection with the contract for which the attached bid has been submitted or to refrain from bidding in connection with such contract, or has in any manner, directly or indirectly, sought by agreement or collusion or communication or conference with any other Bidder, firm, or person to fix the price or prices in the attached bid or of any other Bidder, or to fix any overhead, profit, or cost element of the bid price or the bid price of any other Bidder, or to secure through any collusion, conspiracy, connivance, or unlawful agreement any advantage against the _____ or any person interested in the proposed contract; and

E. The price or prices quoted in the attached bid are fair and proper and are not tainted by any collusion, conspiracy, connivance, or unlawful agreement on the part of the Bidder or any of its agents, representatives, owners, employees, or parties in interest, including this affiant.

(Signed) _____

Mark Giannetti

Subscribed and sworn to before me
this 12th day of October, 20 20

_____
Notary Public

ALEJANDRA VILLATORO
MY COMMISSION # GG 919201
EXPIRES: October 2, 2023
Bonded Thru Notary Public Underwriters

My commission expires 10/02/2023

SECTION 00454
DRUG-FREE WORKPLACE CERTIFICATE

I, the undersigned, in accordance with Florida Statute 287.087, hereby certify that _____
DBF Construction, LLC (Print or Type Name of Firm)

- Publishes a written statement notifying that the unlawful manufacture, distribution, dispensing, possession, or use of a controlled substance is prohibited in the workplace named above, and specifying actions that will be taken against violations of such prohibition.
- Informs employees about the dangers of drug abuse in the workplace; the firm's policy of maintaining a drug-free working environment and available drug counseling, rehabilitation, and employee assistance programs; and the penalties that may be imposed upon employees for drug-use violations.
- Gives each employee engaged in providing commodities or contractual services that are under bid or proposal a copy of the statement specified above.
- Notifies the employees that as a condition of working on the commodities or contractual services under bid or proposal, the employee will abide by the terms of the statement and will notify the employer of any conviction of or plea of guilty or nolo contendere to any violation of Chapter 1893 or any controlled substance law of the State of Florida or the United States for a violation occurring in the workplace, no later than 5 days after such conviction, and requires employees to sign copies of such written statement to acknowledge their receipt.
- Imposes a sanction on or requires the satisfactory participation in a drug-abuse assistance or rehabilitation program, if such is available in the employee's community, by any employee who is so convicted.
- Makes a good faith effort to continue to maintain a drug-free workplace through the implementation of the drug-free workplace program.

"As a person authorized to sign this statement, I certify that the business, firm, or corporation named above complies fully with the requirements set forth herein."

_____
Authorized Signature

10/12/2020
Date Signed

State of: Florida

County of: Broward

Sworn to and subscribed before me this 12th day of October, 20 20

Personally known or Produced Identification _____
(Specify Type of Identification)

_____
Signature of Notary

ALEJANDRA VILLATORO
MY COMMISSION # GG 919201
EXPIRES: October 2, 2023
Bonded Thru Notary Public Underwriters

My Commission Expires 10/02/2023

SECTION 00455
SWORN STATEMENT UNDER SECTION 287.133(3)(a),
FLORIDA STATUTES, ON PUBLIC ENTITY CRIMES

(To be signed in the presence of a notary public or other officer authorized to administer oaths.)

STATE OF Florida

COUNTY OF Broward

Before me, the undersigned authority, personally appeared Mark Giannetti, who, being by me first duly sworn, made the following statement:

1. The business address of DBF Construction, LLC
(firm name of Bidder/Contractor)

is 3710 Park Central Boulevard North ,Pompano Beach, FL, 33064.

2. My relationship to DBF Construction, LLC
(firm name of Bidder/Contractor)

is Vice President.
(relationship such as sole proprietor, partner, president, vice president)

3. I understand that a "public entity crime" as defined in Section 287.133 of the Florida Statutes includes a violation of any state or federal law by a person with respect to and directly related to the transaction of business with any public entity in Florida or with an agency or political subdivision of any other state or with the United States, including, but not limited to, any bid or contract for goods or services to be provided to any public entity or such an agency or political subdivision and involving antitrust, fraud, theft, bribery, collusion, racketeering, conspiracy, or material misrepresentation.

4. I understand that "convicted" or "conviction" is defined by the statute to mean a finding of guilt or a conviction of a public entity crime, with or without adjudication of guilt, in any federal or state trial court of record relating to charges brought by indictment or information after July 1, 1989, as a result of a jury verdict, nonjury trial, or entry of a plea of guilty or nolo contendere.

5. I understand that "affiliate" is defined by the statute to mean (1) a predecessor or successor of a person or a corporation convicted of a public entity crime; or (2) an entity under the control of any natural person who is active in the management of the entity and who has been convicted of a public entity crime; or (3) those officers, directors, executives, partners, shareholders, employees, members, and agents who are active in the management of an affiliate; or (4) a person or corporation who knowingly entered into a joint venture with a person who has been convicted of a public entity crime in Florida during the preceding 36 months.

6. Neither the Bidder/Contractor nor any officer, director, executive, partner, shareholder, employee, member or agent who is active in the management of the Bidder/Contractor, nor any affiliate of the Bidder/Contractor, has been convicted of public entity crime subsequent to July 1, 1989.

(Draw a line through Paragraph 6 if Paragraph 7 below applies.)

7. There has been a conviction of a public entity crime by the Bidder/Contractor, or an officer, director, executive, partner, shareholder, employee, member or agent of the Bidder/Contractor who is active in the management of the Bidder/Contractor or an affiliate of the Bidder/Contractor. A determination has been made pursuant to Section 287.133(3) by order of the Division of Administrative Hearings that it is not in the public interest for the name of the convicted person or affiliate to appear on the convicted vendor list. The name of the convicted person or affiliate is_____.

A copy of the order of the Division of Administrative Hearings is attached to this statement.

(Draw a line through Paragraph 7 if Paragraph 6 above applies.)

(Signature)

Sworn to and subscribed to before me in the State and County first mentioned above on the 12th day of October, 20 20.

Notary Public

ALEJANDRA VILLATORO
MY COMMISSION # GG 919201
EXPIRES: October 2, 2023
Bonded Thru Notary Public Underwriters

(affix seal)

10/02/2023
My commission expires

SECTION 00456
SCRUTINIZED COMPANIES CERTIFICATION FORM

By execution below, I, Mark Giannetti, on behalf of DBF Construction, LLC (hereinafter, the "Contractor"), hereby swear or affirm to the following certifications:

The following certifications apply to all procurements:

1. The Contractor has reviewed section 215.4725, Florida Statutes, section 215.473, Florida Statutes and section 287.135, Florida Statutes, and understands the same.
2. The Contractor is not on the Scrutinized Companies that Boycott Israel List nor is the Contractor engaged in a boycott of Israel.
3. If awarded a contract, the Contractor agrees to require these certifications for applicable subcontracts entered into for the performance of work/services under this procurement.
4. If awarded a contract, the Contractor agrees that the certifications in this section shall be effective and relied upon by the City for the entire term of the contract, including any and all renewals.

If the contract awarded hereunder is for one million dollars or more, the following additional certifications apply:

1. The Contractor is not on the Scrutinized Companies with Activities in Sudan List.
2. The Contractor is not on the Scrutinized Companies with Activities in the Iran Petroleum Energy Sector List.
3. The Contractor is not engaged in business operations in Cuba or Syria.
5. If awarded a contract, the Contractor agrees to require these certifications for applicable subcontracts entered into for the performance of work/services under this procurement.
6. If awarded a contract, the Contractor agrees that the certifications in this section shall be effective and relied upon by the City for the entire term of the contract, including any and all renewals.

**CONTRACTOR:**
By: _____
Name: Mark Giannetti
Title: Vice President
Date: 10/12/2020

STATE OF FLORIDA
COUNTY OF Broward

The foregoing instrument was sworn to (or affirmed) and subscribed before this 12th day of October, 2020, by Mark Giannetti, who is the _____ of _____, who is personally known to me or who has produced _____ as identification.

ALEJANDRA VILLATORO
MY COMMISSION # GG 919201
EXPIRES: October 2, 2023
Bonded Thru Notary Public Underwriters

NOTARY PUBLIC
Printed Name of Notary _____
My Commission expires: 10/02/2023

# *Village of Palm Spring*

PUBLIC SERVICE DEPARTMENT

## CAROL & REX AVENUE

## STORMWATER IMPROVEMENTS

## Addendum No. 1

## October 7, 2020

---

**BIDS DUE: 2:00 PM, Local Time, October 13, 2020**

---

TO ALL VENDORS BIDDING ON THIS PROJECT:

The changes, additions, substitutions, and/or deletions contained in Addendum No. 1 are hereby made a part of the Bid Documents for the **Carol & Rex Ave Stormwater Improvements Project**, fully and completely as if the same were fully set forth herein.

**IN THE PLANS**

No changes

**IN THE SPECIFICATIONS**

No changes

Receipt acknowledged and conditions agreed to the 12th day of October, 2020.

DBF Construction, LLC
Bidder

Mark Giannetti
By

## Corporate Resolution of Signing Authority

I, the undersigned, hereby certify to the Village of Palm Springs that I am the Secretary of DBF Construction, LLC, located in 3710 Park Central Blvd., N, Pompano Beach, FL 33064, and that I have been duly elected and am presently serving in that capacity. I further certify that the following resolution is in full force and effect as if the date of and has not been revoked or rescinded as of this date:

RESOLVED that:

1. The execution of contracts and other instruments of whatever nature entered into by the Company directly, shall be signed by any one of the persons listed below:

| | | |
|---|---|---|
| **Richard L. Gibbs III** | **President** | |
| Printed Name | Title | Signature |
| **Mark Giannetti** | **Vice President** | |
| Printed Name | Title | Signature |

IN WITNESS WHEREOF, I have subscribed my name to this document and affixed the seal o the Corporation on the 9th day of October, 2020.

Signature of Secretary

(SEAL)

**Jeffrey Melnechuk**

Printed Name

Richard Gibbs, III, President/Treasurer
1801 NW 18th STREET

POMPANO BEACH, FLORIDA 33069
Ph: 954-972-8104 Fax: 954-972-8108
richie@giannetticorp.com
richie@dbfconst.comcastbiz.net

Richard (Richie) Gibbs has over 24 years' construction experience as a project manager, estimator, superintendent, foreman, and general partner, in the underground construction industry with governmental agencies in Florida and Michigan. Richie also has experience in commercial construction including custom home building in Michigan and Florida over the past 21 years. Richie is "hands-on" with all current projects in the South Florida area.

**EMPLOYMENT:**

| | | |
|---|---|---|
| Giannetti Contracting Corp. | 1995 – Present | Chief Operating Officer/ President / Treasurer |
| DBF Construction, LLC | 2019- Present | President / Partner |

**RECENT PROJECTS:**

*City of Cape Coral, Florida – UEP North 2, Contract 9* - 2017 - Present
Contract Amount: $28,672,980.00

- Neighborhood infrastructure improvement project located in Cape Coral, Florida. This neighborhood infrastructure project included over 186,000 LF of new water main, irrigation water main, gravity sewer, force main, drainage, and fiber optic conduit from 4" to 42" in diameter. A lift station was also installed. Project also included over 127,000 SY of new roadway construction, sidewalks, driveway aprons, and sodded swales.

*City of Cape Coral, Florida – UEP North 2, Contract 8* - 2018 - Present
Contract Amount: $28,672,980.00

- Neighborhood infrastructure improvement project located in Cape Coral, Florida. This neighborhood infrastructure project included over 140,000 LF of new water main, irrigation water main, gravity sewer, force main, drainage, and fiber optic conduit from 4" to 42" in diameter. Project also included over 113,000 SY of new roadway construction, sidewalks, driveway aprons, and sodded swales.

*City of Punta Gorda, Florida – Jones Loop Force Main* - 2019
Contract Amount: $2,066,078.44

- Large diameter force main replacement project in Punta Gorda, Florida. Project consisted of over 10,000 LF of new force main with over 90% being 16" diameter. Project also consisted on multiple 16" directional drills with four drills being over 500 LF in length. Project also consisted of a jack & bore, lift station, and associated restoration.

*City of Hollywood, Florida – Water Main Replacement Program – Hollywood Blvd. to Sheridan St., Federal Hwy. to Intracoastal Waterway* 2015 - 2018
Contract Amount: $12,253,900.57

- Water Main Replacement Project included over 116,000 LF of new water main and 3,400 LF of new drainage from 4" to 48" in diameter. Project also included over 217,000 SY of mill & overlay, sidewalks, driveway aprons, and sodded swales.

*Loxahatchee River Environmental Control District – Jupiter Inlet Colony Neighborhood Rehabilitation Project* - 2016 - 2018

Contract Amount: $8,912,466.41

- Neighborhood infrastructure improvements project on island in Jupiter Inlet Colony, Florida. Project included over 39,000 LF of water main, gravity sewer force main, and drainage from 4" to 30" in diameter. New lift station was also installed. Project also included over 33,000 SY of new roadway construction, sidewalks, driveway aprons, and sodded swales.

*Florida Keys Aqueduct Authority – Cudjoe Inner Islands* 2013 – 2015

Contract $45,119,495.13.

- Environmentally sensitive complete sewer replacement for Cudjoe, Upper Sugarloaf, and Summerland Keys. The transmission main along US-1 is also being replaced from MM 19 to 25.Project includes over 300,000 LF of water main, low pressure force main, open cut force main, gravity sewer main, slip lining, and directional bores from 1-1/2" to 16" in diameter. Project also includes 31 area lift stations and 2 master lift stations and 200,000 SY of 1" Asphalt Overlay.

*Broward County - North County Neighborhood Improvements Bid Pack # 11* - 2011 - 2014

Contract Amount: $17,807,186.

- Project included over 188,000 LF of new drainage, water main, gravity sewer main, force main, reclaimed water main from 4" to 48" in diameter. Over 124,000 SY of new roadway construction, sidewalks, driveway aprons, and sodded swales were also installed throughout entire neighborhood.

*Palm Beach County Water Utilities Department – Belvedere Homes Phase 2* - 2012-2013

Contract Amount: $ 4,252,998.

- Over 24,000 LF of new drainage, water main, and vacuum sewer main from 4" to 42" in diameter. Project also included 1" milling and overlay as well as over 16,000 SY of new roadway construction, sidewalks, driveway aprons, and sodded swales were also installed throughout entire neighborhood.

*Broward County - Utility Analysis Zone Improvement Program (UAZ) 308 - 2011-2013*

Contract Amount: $6,488,292.

- Project included over 50,000 LF of new water main, gravity sewer main, and force main from 6" to 10" in diameter. Over 50,000 SY of new roadway construction, sidewalks, driveway aprons, and sodded swales were also installed throughout entire neighborhood.

*Broward County – Broadview Park Neighborhood Improvement Project – Bid Pack #3* - 2010 - 2013

Contract Amount: $13,261,559.

- Project included over 72,000 LF of new drainage, gravity sewer main, and force main from 8" to 24" in diameter. Over 150,000 SY of new roadway construction, sidewalks, driveway aprons, and sodded swales were also installed throughout entire neighborhood.

**LICENSES AND CERTIFICATIONS**:

OSHA Qualified Person

Mark Giannetti / Vice President
1850 NW 15th AVE., SUITE 225
POMPANO BEACH, FLORIDA 33069
Ph: 954-532-9869 Fax: 954-532-9897
Mark@dbfconst.comcastbiz.net

DBF CONSTRUCTION LLC

Mark Giannetti has over 25 years' construction experience as a project manager, estimator, superintendent, foreman, and general partner, and owner in the underground construction industry with governmental agencies in Florida.

**EMPLOYMENT:**

| | | |
|---|---|---|
| Giannetti Contracting Corp. | 1994 – 2004 | Operator, Foreman, Director of Field Operations for Underground Utility Crews |
| JC Fodale Group of Florida | 2004- 2006 | Superintendent |
| DBF Construction, LLC | 2006- Present | Vice President / Partner |

**RECENT PROJECTS:**

*City of Oakland Park, Florida – Bid Pack 11* - 2017
Contract Amount: $2,037,595.35

- This project included the installation of 8" ductile water main, 18", 24", and 36" drainage and french drain, complete road rehabilitation, 8" sewer main repairs, mill and overlay.

*Palm Beach County, Florida – South County Phase 5* - 2018
Contract Amount: $2,065,681.87

- This neighborhood infrastructure improvement project included the installation of approximately 12,000 LF of 6" water main, 1,000 LF of 8" water main, 4,000 LF of 12" water main, 8" aerial water main crossing and approximately 285 water services.

*City of Pompano Beach, Florida – Reuse System Phase I* - 2018
Contract Amount: $1,767,428.87

- This neighborhood infrastructure project included the installation of 9,000 FT of reclaimed water main from 4" to 16" diameter, also included trench restoration and mill & overlay.

*Town of Lantana, Florida – South Lake Drive Force main Replacement, South 13th Place Water Main Replacement, Lantana Cove Stormwater Improvements* - 2018
Contract Amount: $1,118,760.24

- This project included the installation of 6" PVC C900 (DR18) force main, 6" PVC C900 (DR18) water main and drainage improvements, dewatering.

*Monroe County, Florida – Tarpon Harbour*- 2015
Contract Amount: $1,174,000.00

- This project included installation of sewer force main, high pressure fire main, water main, drainage, gravity sewer, drainage outfall into the Gulf of Mexico, and vacuum sewer.

*City of Weston, Florida – Country Isles Water Service Replacement* 2015
Contract $1,003,000.00.

- This project consisted of various water service replacements including wet taps, taps on existing main, open cut and/or directional drilling missile installation. Mill & overlay, striping and concrete.

*City of Lighthouse Point, Florida – Frank McDonough Park* - 2018
Contract Amount: $115,746.00

- Project included the installation of approximately 12,000 LF of 6" water main, 1,000 LF of 8" water main, 4,000 LF of 12" water main, 8" aerial water main crossing and approximately 285 water services.

*Palm Beach County Water Utilities Department, Florida/ Giannetti Contracting Corp. – Belvedere Homes Phase 2* - 2013
Contract Amount: $ 677,000.00

- This project consisted of labor only. Installation of 5,800 LF of 15" – 48" storm water. 16,000 LF of water main 8" – 12" diameter, 14,000 LF of 8" vacuum sewer, vacuum pits and laterals, water services, roadway restoration, swale grading.

*City of Hollywood, Florida / Giannetti Contracting Corp. – Water Main Program Phase I: Hollywood Blvd. to Johnson St. from N 46th avenue to N 52nd avenue - 2014*
Contract Amount: $664,000

- This project consisted of labor only. Installation of 27,000 LF new water main and 605 water services. Main line pipe sizes ranged from 6" to 12" in diameter.

*City of Hollywood, Florida / Giannetti Contracting Corp. – Water Main Program Phase I: Hollywood Blvd. to Johnson St. from N 46th avenue to N 52nd avenue. - 2014*

Contract Amount: $1,037,000.00

- This project consisted of labor only. Installation of labor only 27,000 LF of 4" – 12" water main with 150 water services, cut, cap, and grout abandonment of existing water mains, asphalt trench replacement, and asphalt overlay.

**LICENSES AND CERTIFICATIONS:**

- OSHA Qualified Person

# Pablo C. Riaño

Sr. Project Manager

PabloR@dbf-construction.com

WORK EXPERIENCE

---

July 2020 – Present — DBF Construction

*Sr. Project Manager*

- Planning, coordination, and management of construction activities associated with various Public Works projects from preconstruction stage through final acceptance sage. Which include, but are not limited to, construction of water distribution systems, sanitary sewer collection and transmission systems, storm drainage systems, lift stations, treatment plants, road improvements, landscape, and other incidentals.
- Preparation, correction, submittal, and updates of applications for payment, shop drawings, schedules, requests for service, requests for information, requests for quotes, notices of change conditions, notices for change in contract time, etc., for various construction projects.
- Coordinates and reviews field work production following up with daily, weekly, and monthly meetings with superintendents, inspectors, and other staff
- Investigates and helps in the resolution of claims and damages.
- Develops and maintains connections with clients, engineers, subcontractors, and residents.
- Business development for operations in and outside of the U.S.

December 2018 – June 2020 — Lanzo Construction Co., FL

*Director of Operations*

- Directly and through subordinate engineering staff and utilities field personnel, as well as in conjunction with other engineering consultants, plans, directs, supervises, and coordinates the design and construction of municipal engineering projects.

- Applied advanced project and construction management skills and considerable use of independent judgment in planning and managing/reviewing projects that are design in-house as well as projects that are developed by engineering consultants.
- Performed complex assignments requiring the exercise of considerable initiative and independent judgment in assuring that activities meet high standards of service, are performed with the maximum effective use of resources, and that work is accomplished in accordance with accepted technical standards and in compliance with applicable rules, regulations, and laws.
- In charge of overseeing all aspects of the day to day field operations regarding equipment, manpower, materials, subcontractors, other resources, etc.
- Conducted weekly meetings with appropriate staff to update each project. Assessment of moneys earned, work progress, future billings, and analyze budget breakdown, original vs actual and gross profit difference. Review of change orders, as-built drawings, upcoming work, and claims, among others.
- Reported directly to the Chief Operating Officer and Chief Executive Officer in all aspects of the field operations.

June 2004 – November 2018 Lanzo Construction Co., FL

*Sr. Project Manager*

- Planning, coordination, and management of construction activities associated with various Public Works projects from preconstruction stage through final acceptance sage. Which include, but are not limited to, construction of water distribution systems, sanitary sewer collection and transmission systems, storm drainage systems, lift stations, treatment plants, road improvements, landscape, and other incidentals.
- Preparation, correction, submittal, and updates of applications for payment, shop drawings, schedules, requests for service, requests for information, requests for quotes, notices of change conditions, notices for change in contract time, etc., for various construction projects.
- Coordinates and reviews field work production following up with daily, weekly, and monthly meetings with superintendents, inspectors, and other staff
- Investigates and helps in the resolution of claims and damages.
- Develops and maintains connections with clients, engineers, subcontractors, and residents.
- Business development for operations in and outside of the U.S.

## EDUCATION

| | | |
|---|---|---|
| 2001 – 2005 | Florida International University | Miami, FL |
| | *Bachelor of Science Degree, Civil & Environmental Engineering* | |
| 1998 – 2001 | Broward College | |
| | *Associate of Arts Degree, Engineering* | |

## ENGINEERING SKILLS

- Excellent computer skills including MS Word, Excel, PowerPoint
- AutoCAD 2020
- P6
- Excellent oral and technical writing skills
- Excellent organizational skills
- Experience in leadership and teamwork
- Ability to provide a positive and productive working environment
- Fully bilingual (English & Spanish)

## PROFESIONAL MEMBERSHIPS

- Florida Engineering Society/National Society of Professional Engineers
- American Society of Civil Engineers

## CERTIFICATIONS

- Confined Space & Rescue Training
- Stormwater Erosion and Sedimentation Control
- FDOT Advanced Temporary Traffic Control

# CHRISTOPHER J. IACOBELLI

CHRIS@DBF-CONSTRUCTION.COM

954-892-0678

## EXPERIENCE

**Equipment operator / Foreman / Superintendent / Project Manager / Estimator**

Dates From 1982 to 1990

Iacobelli Contracting, Inc.

Medley, Florida

Performed multiple tasks on large diameter transmission mains for Miami Dade Water & Sewer Authority

Tasks included:

- Planning laying schedules
- Coordinating crews for installation, cleaning, joint welding, testing, & restoration

Also oversaw all heavy equipment maintenance and repair

**OWNER / PRESIDENT OF COASTAL UTILITIES, INC. COOPER CITY, FL.**

Dates From 1990 - 1997

Completed approximately $30 million of Water Main, Sanitary Sewer, & Storm Drainage Improvements in the Dade, Broward, Palm Beach, & Monroe Counties

**Project Manager / Estimator**

Megan South, LLC

Davie, Fl.

Dates From 1997 - 2001

Completed approximately $10 million of

Earthwork, Water Main, Sanitary Sewer, Storm Drainage, & Roadway construction within Dade, Broward, Palm Beach, & Monroe Counties

**Part Owner / Estimator / Project Manager**

**GMI Contracting, Inc.**

**Davie, Fl.**

Dates From 2001 - 2012

Completed approximately $15 million of Earthwork, Water Main, Sanitary Sewer, Storm Drainage, & Roadway Construction within Dade, Broward, Palm Beach, & Monroe Counties.

**Project Superintendent / Estimator**

**Charlie Frymyer Paving, Inc.**

**Davie, Fl.**

Dates from 2012 – 2014

Completed:

- 3,500 LF Water Main
- 3,500 LF Force Main
- 1,200 LF of Poured in place concrete containment (30' wide x 4' high within the Fort Lauderdale Airport Runway expansion and US 1Tunnel Project
- Several thousand LF of Storm Drainage (15" up to 60" RCP) within the Fort Lauderdale Airport Terminal 4 Improvements

**Project Manager / Estimator**

**TV Diversified, LLC**

**Lake Worth, Fl.**

Dates from 2014 – 2016

Completed approximately $6 million of Lift Station Rehabilitation, Water Main Improvements, Sanitary Sewer Point Repairs, & Treatment Plant Improvements

**Project Superintendent**

**All County Paving, Inc.**

**Delray Beach, Fl.**

Dates from 2016 - 2018

Oversaw multiple crews and subcontractors on the Hard Rock Stadium Site Improvements Project including Demolition, Water Main, Storm Drainage, Sanitary Sewer, Textured Concrete, Brick Pavers, Curb & Gutter, Parking Lot Reconstruction, Striping / Signage, & Landscaping,

Also oversaw the scheduling, Inspection, material requirements, equipment allocation, and manpower allocation for multiple Road Building crews on a Neighborhood Improvement project in Davie, Fl.

**Project Manager and Field Superintendent**

**DBF Construction, LLC**

Dates from 2018 – Current

Oversee multiple crews on several Water Main, Sanitary Sewer, Storm Drainage, & Water Reuse projects

## EDUCATION

**DEGREE / DATE EARNED**

School

Bachelor of Arts

Florida Atlantic University

1982

DBF
CONSTRUCTION LLC

3710 Park Central Blvd North
Pompano Beach, FL 33064
Phone: 954-532-9867

# SAFETY PLAN

**PROJECT: Washington Road Improvements**

# INTRODUCTION

It is the policy of **DBF Construction, LLC** to provide a safe workplace for its employees. To this end, the company, in correct with employees, will seek to comply with all applicable standards promulgated pursuant to the Florida Occupation Safety and Health Act

Any questions regarding this document should be addressed to:

**Safety Officer: Spencer Mart**

**954-532-9869**

# DBF Construction, LLC

## Safety Standards

It is the policy of this company to keep its employees informed of all safety rules contained in the Construction Safety Standards and the Occupational Health Standards.

Any employee may obtain a copy of any of the above referenced standards by contacting the company Safety Officer.

# DBF Construction, LLC

## Accident Prevention Program/General Safety Rules

1. It is the policy of **DBF Construction, LLC** to furnish each employee employment which is free from recognized hazards that are causing or are likely to cause death or serious physical harm to such employee.

2. **DBF Construction, LLC** designates Spencer Mart as corporate Safety Officer. This person is responsible for the implementation of the Company's safety program. If any employee needs to know who the company Safety Office is, they can find out by asking any foreman.

3. When practical, employees of **DBF Construction, LLC** will participate in safety seminars sponsored by the Associated Underground Contractors, Inc., and / or other organizations.

4. The Safety Officer shall designate a qualified employee on each crew or project who will have the following responsibilities:

    a) Instruct each employee regarding operating procedures, hazards and safeguards of tools and equipment when necessary to perform the job.

    b) Inspect the construction site, tools and equipment to assure unsafe conditions that may create a hazard are eliminated.

    c) Instruct each employee in the recognition and avoidance of hazards.

    d) Instruct each employee, where known harmful plants, reptiles, animals or insects are present, as to the potential hazards, how to avoid injury, and applicable first aid procedures to be used in the event of an injury.

    e) Instruct each employee required to handle or use known poisons, toxic materials, caustics and other harmful substances regarding the potential hazards, safe handling, use, personal hygiene, protective measures require and applicable first aid procedures to be used in the event of injury.

    f) Instruct each employee required to enter a confined space regarding the hazards involved, the necessary precautions to be taken, the use of personal protective equipment, and the procedures to be followed if an emergency occurs.

    g) Instruct all employees in the steps to be taken in case of an injury or accident.

5. DBF Construction, LLC shall not knowingly permit an employee to work while under the influence of intoxicating beverages or substances which would impair the employee's ability to perform a task in a safe manner. Additionally, no employee shall possess/ use intoxicating beverages or controlling substances at any DBF Construction, LLC site or facility. Any employee violating this policy is subject to immediate dismissal.

6. The job foreman will inspect all machines, tools and equipment on a regular basis to make certain that no defect is present that will affect the safety of employees.

7. All employees' complaints or concern regarding safety shall be immediately brought to the attention of the Safety Officer.

8. Periodic meetings will be held to inform all employees of the company safety program.

9. This safety program shall be made available to all employees.

10. A copy of the AUC *Trench Safety Handbook* shall be made available to all employees who are involved in working in open excavations.

11. Employees will adhere to the following Safety Rules:

**A. Miscellaneous Rules**

a) Do not use tools or equipment that you have not been trained or authorized to use. This rule also applies to power-actuated tools.
b) Gasoline must be stored and transported in approved cans only. Engines must be shut off when refueling and no smoking anywhere near flammable liquids.
c) Immediately report all injuries, whether to yourself or a co-worker, to your foreman.
d) Do not distract the attention of fellow workers.

**B. Trenching Rules**

a) Spoil must be at least 2 feet back from the lip of the trench
b) All employees working in excavations or trenches must always stay within the protective system (trench shield, shoring, sloping).
c) Never climb on shoring, trench shields, or sloped walls or ride on any lift, hook, chain, cable, sling, or other equipment parts.

Stay out from under suspended loads, away from moving equipment, and counterweights.

c) Only designated individuals shall be permitted to operate or service heavy equipment.

d) Perform frequent and periodic inspection as required.

e) The equipment operator must wear the seat belt when required.

f) No employee is permitted to ride on any part of the equipment.

g) It is the responsibility of all employees to make certain that back-up alarms on obstructed rear-view equipment be in operable condition. Use a flagger to move equipment when back up alarms are inoperable.

h) Maintain a 10" minimum clearance from energized lines; use a spotter in difficult areas.

F. Fall Protection

a) All manholes which present a fall hazard should be covered and identified as a hole.
b) Guardrails around open shafts and bore pits deeper than 6" should be 42" plus or minus 3" high.
c) The intermediate rail should be positioned halfway between the floor and top rail.
d) The threshold for fall protection use is 6". Fall protection may be accomplished by guarding, personal fall arrest systems or safety nets. Ask your qualified person.

G. Traffic

a) All traffic control devices are to be placed under the direction of the Qualified Employee. While flagging or directing vehicular traffic, a reflectorized, fluorescent orange warming vest shall be worn at all times. Flag people are to be courteous at all times.
b) A six foot staff two-sided paddle sign with "STOP" on one side and "SLOW" on the other shall be used to control traffic.
c) When working in or adjacent to vehicular traffic always face the flow of traffic or use of a spotter.

DBF Construction, LLC
Emergency Response Program

1. As part of its safety program it is the policy of DBF Construction, LLC to make certain that all employees have been instructed as to proper procedures in case of an injury or accident.

2. DBF Construction, LLC designates the 911 system as its first response in the event of a medical emergency and/ or rescue operation.

3. A list of emergency phone numbers will be posted at the jobsite when practical. If no suitable or convenient location exists, the list will be kept by the project foreman.

4. All injuries and/ or accident shall be reported to the job foreman immediately.

5. All incidents and/ or injuries shall be reported to the Safety Officer as soon as is practical

6. DBF Construction, LLC will provide a person at each job site who is trained in CPR and First Aid procedures as required by any applicable Safety & Health Standards.

7. Never move an injured person unless absolutely necessary. Further injury may result. Keep injured comfortable and utilize available First Aid equipment until an ambulance arrives.

DBF Construction, LLC
Responsibilities of Foreman / Qualified Employee

1. Assure that the safety program is implemented.
2. Inspect the job site to assure that no unsafe conditions exist.
3. Make sure that necessary protective equipment is on hand and used when required.
4. Instruct all employees in safe procedures and job safety requirements. Follow up and insist on compliance.
5. Discuss safety with employees on every operation. Have periodic safety meetings.
6. See that all injuries are cared for properly and reported promptly.
7. Investigate all accidents. File a complete accident report with the Safety Officer and correct the causes immediately. USE OSHA FOR 300 AND/OR 300A
8. Be familiar with the rules pertaining to safety.
9. Report any hazardous conditions to the Safety Officer even if the condition has been corrected.
10. Recommend reprimands for employees found in non-compliance of safety program and related materials.

# DBF Construction, LLC
## Personal Protective Equipment Policy

It is the policy of DBF Construction, LLC that all employees comply with the OSHA standards in regards to the use of personal protective equipment. Violation of this policy will be subject to discipline as outlined in this section.

1. This company shall provide all personal protective equipment t as required by OSHA.
2. All employees outside of a cabbed vehicle or covered piece of equipment must wear a hard hat. There will be no exceptions to this rule.
3. All employees must wear required hand protection, gloves, etc. when an employee is exposed to hazards such as radiation, alkalies, acids, adhesives and temperature extremes other than those caused by weather conditions. Appropriate hand protection other than ordinary work gloves will be supplied by the company.
4. Any employee directing vehicular traffic must wear a fluorescent orange vest.
5. All employees must wear proper foot protection if conditions on the job are likely to cause foot injury. Tennis shoes or similar footwear is strictly forbidden.
6. The use of face and eye protection will vary according to the task performed. All employees must consult with the qualified employee to determine the proper method of protection and this protective gear must be worn.
7. Any personal protective equipment that is found to be defective shall be immediately reported to the safety officer or qualified person.
8. Acknowledgement of receipt of personal protective equipment will be kept on file at the company office.
9. A company disciplinary policy is in effect regarding personal protective equipment and is available to all employees upon request.

Acknowledgement and Receipt

Personal Protective Equipment

_____, an employee of DBF Construction, LLC, has received a copy of the company's policy (Dated ) regarding the wearing of personal protective equipment and am aware of the disciplinary procedure I can be subject to for failure to wear personal protective equipment as instructed.

I acknowledge receipt of and instruction in the wearing of the following personal protective equipment.

1.

2.

3.

4.

5.

6.

I further acknowledge that I may turn in equipment which has been damaged or no longer functions properly because of use or normal wear and tear and receive a free replacement of that item. However, if I should lose or damage through neglect any company- provided personal protective equipment, I authorize the company to deduct the cost of that item, in the pay period in which the loss or damage is reported or detected, from any wages which the company may owe.

Date: _____ Employee Signature: _____

DBF Construction, LLC

Disciplinary Policy

It is the policy of DBF Construction, LLC to supply its employees with a workplace which is free from recognized hazards. DBF Construction, LLC will provide to each employee the proper tools, equipment, training and instructions so that every job is accomplished effectively and safely. DBF Construction, LLC is concerned with your safety and requires you to take advantage of these measures for your protection.

In order to ensure your compliance with this policy, the following schedule of disciplinary action shall apply to any employee found to be in violation of the required procedures:

| | |
|---|---|
| First Offense- | Written warning filed in employees permanent file (Effective for one year from date of issue). |
| Second Offense- | Written warning filed in the employees permanent file (Effective for one year from date of issue). |
| Third Offense- | Subject to suspension without pay for a length of the time to be determined at time of offense. |
| Subsequent Offenses- | Subject to dismissal or suspension without pay for a length Of time to be determined at time of offense. |

Safety is everyone's' responsibility. The safety rules DBF Construction, LLC are in place to protect you and your fellow employees and these rules will be enforced.

Employee Signature:_____

Date: _____

DBF Construction, LLC

Employee Sign-Off Sheet

_____, an employee of DBF Construction, LLC understands this company's safety policy. I also understand that if I have any questions concerning the safety policy or safety in general I may contact the company safety officer for clarification. Further, I understand that safety is everyone's responsibility, including my own.

Signed: _____

Date: _____

Ron DeSantis, Governor

Halsey Beshears, Secretary

# STATE OF FLORIDA
# DEPARTMENT OF BUSINESS AND PROFESSIONAL REGULATION

## CONSTRUCTION INDUSTRY LICENSING BOARD

THE GENERAL CONTRACTOR HEREIN IS CERTIFIED UNDER THE
PROVISIONS OF CHAPTER 489, FLORIDA STATUTES

## LYSSENKO, ILIA V

DBF CONSTRUCTION LLC
3710 PARK CENTRAL BLVD N
POMPANO BEACH FL 33064

**LICENSE NUMBER: CGC1512467**

**EXPIRATION DATE: AUGUST 31, 2022**

Always verify licenses online at MyFloridaLicense.com

Do not alter this document in any form.

This is your license. It is unlawful for anyone other than the licensee to use this document.

Ron DeSantis, Governor

Halsey Beshears, Secretary

Florida dbpr

# STATE OF FLORIDA
# DEPARTMENT OF BUSINESS AND PROFESSIONAL REGULATION

## CONSTRUCTION INDUSTRY LICENSING BOARD

THE UNDERGROUND UTILITY & EXCAVATION CO HEREIN IS CERTIFIED UNDER THE PROVISIONS OF CHAPTER 489, FLORIDA STATUTES

## LYSSENKO, ILIA V

DBF CONSTRUCTION LLC
3710 PARK CENTRAL BLVD N
POMPANO BRACH FL 33064

**LICENSE NUMBER: CUC1224328**

**EXPIRATION DATE: AUGUST 31, 2022**

Always verify licenses online at MyFloridaLicense.com

Do not alter this document in any form.

This is your license. It is unlawful for anyone other than the licensee to use this document.

# BROWARD COUNTY LOCAL BUSINESS TAX RECEIPT

115 S. Andrews Ave., Rm. A-100, Ft. Lauderdale, FL 33301-1895 – 954-831-4000

**VALID OCTOBER 1, 2020 THROUGH SEPTEMBER 30, 2021**

**DBA:** DBF CONSTRUCTION LLC
**Business Name:** DBF CONSTRUCTION LLC

**Receipt #:** 130-258258
**Business Type:** GENERAL CONTRACTOR (GENERAL CONTRACTOR)

**Owner Name:** ILIA LYSSENKO
**Business Location:** 3710 PARK CENTRAL BLVD
POMPANO BEACH
**Business Phone:** 954-892-1697

**Business Opened:** 10/09/2013
**State/County/Cert/Reg:** CGC1512467
**Exemption Code:**

| Rooms | Seats | Employees | Machines | Professionals |
|---|---|---|---|---|
| | | 8 | | |

For Vending Business Only — Number of Machines: — Vending Type:

| Tax Amount | Transfer Fee | NSF Fee | Penalty | Prior Years | Collection Cost | Total Paid |
|---|---|---|---|---|---|---|
| 27.00 | 0.00 | 0.00 | 0.00 | 0.00 | 0.00 | 27.00 |

**THIS RECEIPT MUST BE POSTED CONSPICUOUSLY IN YOUR PLACE OF BUSINESS**

**THIS BECOMES A TAX RECEIPT WHEN VALIDATED**

This tax is levied for the privilege of doing business within Broward County and is non-regulatory in nature. You must meet all County and/or Municipality planning and zoning requirements. This Business Tax Receipt must be transferred when the business is sold, business name has changed or you have moved the business location. This receipt does not indicate that the business is legal or that it is in compliance with State or local laws and regulations.

**Mailing Address:**

DBF CONSTRUCTION LLC
3710 PARK CENTRAL BOULEVARD
POMPANO BEACH, FL 33064

**Receipt #20C-19-00001493**
**Paid 07/07/2020 27.00**

**2020 - 2021**

pompano beach
Florida's Warmest Welcome

**CITY OF POMPANO BEACH**
**BUSINESS TAX RECEIPT**
**FISCAL YEAR: 2020 - 2021**

## Business Tax Receipt Valid from: October 1, 2020 through September 30, 2021

9/21/2020

4472527
DBF CONSTRUCTION LLC
3710 N PARK CENTRAL BL

POMPANO BEACH FL 33064

## THIS IS NOT A BILL

THIS IS YOUR BUSINESS TAX RECEIPT. PLEASE POST IN A CONSPICUOUS PLACE AT THE BUSINESS LOCATION.

**BUSINESS OWNER:** DBF CONSTRUCTION LLC
**BUSINESS LOCATION:** 3710 N PARK CENTRAL BL POMPANO BEACH FL

| RECEIPT NO: | CLASSIFICATION |
|---|---|
| 21-00102650 | CONTRACTOR GENERAL (GC) |
| 21-00102652 | ENGINEERING CONSTRUCTION (1A-4C) |

**NOTICE**: A NEW APPLICATON MUST BE FILED IF THE BUSINESS NAME, OWNERSHIP OR ADDRESS IS CHANGED. THE ISSUANCE OF A BUSINESS TAX RECEIPT SHALL NOT BE DEEMED A WAIVER OF ANY PROVISION OF THE CITY CODE NOR SHALL THE ISSUANCE OF A BUSINESS TAX RECEIPT BE CONSTRUED TO BE A JUDGEMENT OF THE CITY AS TO THE COMPETENCE OF THE APPLICANT TO TRANSACT BUSINESS. **THIS DOCUMENT CANNOT BE ALTERED.**

**BUSINESS TAX RECEIPTS EXPIRE SEPTEMBER 30TH OF EACH YEAR**

Client#: 6898 DBFCON

# ACORD™ CERTIFICATE OF LIABILITY INSURANCE

DATE (MM/DD/YYYY) 08/12/2020

THIS CERTIFICATE IS ISSUED AS A MATTER OF INFORMATION ONLY AND CONFERS NO RIGHTS UPON THE CERTIFICATE HOLDER. THIS CERTIFICATE DOES NOT AFFIRMATIVELY OR NEGATIVELY AMEND, EXTEND OR ALTER THE COVERAGE AFFORDED BY THE POLICIES BELOW. THIS CERTIFICATE OF INSURANCE DOES NOT CONSTITUTE A CONTRACT BETWEEN THE ISSUING INSURER(S), AUTHORIZED REPRESENTATIVE OR PRODUCER, AND THE CERTIFICATE HOLDER.

IMPORTANT: If the certificate holder is an ADDITIONAL INSURED, the policy(ies) must be endorsed. If SUBROGATION IS WAIVED, subject to the terms and conditions of the policy, certain policies may require an endorsement. A statement on this certificate does not confer rights to the certificate holder in lieu of such endorsement(s).

| | |
|---|---|
| PRODUCER<br>ZERVOS GROUP INC<br>24724 Farmbrook<br>P O Box 2067<br>Southfield, MI 48037-2067 | CONTACT NAME:<br>PHONE (A/C, No, Ext): 248 355-4411 FAX (A/C, No): 248 355-2175<br>E-MAIL ADDRESS: |
| INSURED<br>DBF CONSTRUCTION LLC<br>3710 Park Central Blvd N<br>Pompano Beach, FL 33064 | INSURER(S) AFFORDING COVERAGE — NAIC #<br>INSURER A : Valley Forge Insurance Company — 20508<br>INSURER B : Continental Insurance Company — 35289<br>INSURER C : National Fire Insurance Co. Hartford — 20478<br>INSURER D :<br>INSURER E :<br>INSURER F : |

COVERAGES CERTIFICATE NUMBER: REVISION NUMBER:

THIS IS TO CERTIFY THAT THE POLICIES OF INSURANCE LISTED BELOW HAVE BEEN ISSUED TO THE INSURED NAMED ABOVE FOR THE POLICY PERIOD INDICATED. NOTWITHSTANDING ANY REQUIREMENT, TERM OR CONDITION OF ANY CONTRACT OR OTHER DOCUMENT WITH RESPECT TO WHICH THIS CERTIFICATE MAY BE ISSUED OR MAY PERTAIN, THE INSURANCE AFFORDED BY THE POLICIES DESCRIBED HEREIN IS SUBJECT TO ALL THE TERMS, EXCLUSIONS AND CONDITIONS OF SUCH POLICIES. LIMITS SHOWN MAY HAVE BEEN REDUCED BY PAID CLAIMS.

| INSR LTR | TYPE OF INSURANCE | ADDL INSR | SUBR WVD | POLICY NUMBER | POLICY EFF (MM/DD/YYYY) | POLICY EXP (MM/DD/YYYY) | LIMITS | |
|---|---|---|---|---|---|---|---|---|
| A | X COMMERCIAL GENERAL LIABILITY<br>[ ] CLAIMS-MADE [X] OCCUR<br>X Contractual<br>X X, C & U<br>GEN'L AGGREGATE LIMIT APPLIES PER:<br>[ ] POLICY [X] PRO-JECT [ ] LOC<br>X OTHER: | X | X | 6078749646 | 08/10/2020 | 08/10/2021 | EACH OCCURRENCE<br>DAMAGE TO RENTED PREMISES (Ea occurrence)<br>MED EXP (Any one person)<br>PERSONAL & ADV INJURY<br>GENERAL AGGREGATE<br>PRODUCTS - COMP/OP AGG | $1,000,000<br>$100,000<br>$15,000<br>$1,000,000<br>$2,000,000<br>$2,000,000 |
| C | AUTOMOBILE LIABILITY<br>X ANY AUTO<br>ALL OWNED AUTOS [ ] SCHEDULED AUTOS<br>X HIRED AUTOS [X] NON-OWNED AUTOS | X | X | 6078749663 | 08/10/2020 | 08/10/2021 | COMBINED SINGLE LIMIT (Ea accident)<br>BODILY INJURY (Per person)<br>BODILY INJURY (Per accident)<br>PROPERTY DAMAGE (Per accident) | $1,000,000<br>$<br>$<br>$ |
| B | X UMBRELLA LIAB [X] OCCUR<br>EXCESS LIAB [ ] CLAIMS-MADE<br>DED [X] RETENTION $0 | X | X | 6078749680 | 08/10/2020 | 08/10/2021 | EACH OCCURRENCE<br>AGGREGATE | $5,000,000<br>$5,000,000 |
| C | WORKERS COMPENSATION AND EMPLOYERS' LIABILITY<br>ANY PROPRIETOR/PARTNER/EXECUTIVE OFFICER/MEMBER EXCLUDED? Y/N [N]<br>(Mandatory in NH)<br>If yes, describe under DESCRIPTION OF OPERATIONS below | N/A | X | 6078749677 | 08/10/2020 | 08/10/2021 | X PER STATUTE [ ] OTH-ER<br>E.L. EACH ACCIDENT<br>E.L. DISEASE - EA EMPLOYEE<br>E.L. DISEASE - POLICY LIMIT | $1,000,000<br>$1,000,000<br>$1,000,000 |
| A | Leased or Rented Equipment Scheduled Equip. | | | 6078749646 | 08/10/2020 | 08/10/2021 | $100,000 Limit<br>$1,000 Deductible<br>See Below | |

DESCRIPTION OF OPERATIONS / LOCATIONS / VEHICLES (ACORD 101, Additional Remarks Schedule, may be attached if more space is required)

Illustration of coverage only.

CERTIFICATE HOLDER

ILLUSTRATION OF COVERAGE ONLY

CANCELLATION

SHOULD ANY OF THE ABOVE DESCRIBED POLICIES BE CANCELLED BEFORE THE EXPIRATION DATE THEREOF, NOTICE WILL BE DELIVERED IN ACCORDANCE WITH THE POLICY PROVISIONS.

AUTHORIZED REPRESENTATIVE

© 1988-2014 ACORD CORPORATION. All rights reserved.



The ACORD name and logo are registered marks of ACORD

AJP

# State of Florida
# Department of State

I certify from the records of this office that DBF CONSTRUCTION LLC is a limited liability company organized under the laws of the State of Florida, filed on July 3, 2013, effective July 3, 2013.

The document number of this limited liability company is L13000095337.

I further certify that said limited liability company has paid all fees due this office through December 31, 2020, that its most recent annual report was filed on January 8, 2020, and that its status is active.

*Given under my hand and the Great Seal of the State of Florida at Tallahassee, the Capital, this the Eighth day of January, 2020*

*Secretary of State*

**Tracking Number: 1446487081CC**

**To authenticate this certificate,visit the following site,enter this number, and then follow the instructions displayed.**

**https://services.sunbiz.org/Filings/CertificateOfStatus/CertificateAuthentication**

DBF CONSTRUCTION LLC

## COMPLETED PROJECT REFERENCES

**CITY OF OAKLAND PARK- BID PACK 11**
**5100 NE 12TH TER., OAKLAND PARK, FL 33334**
**Initial Contract Value: $2,037,595.35 Final Contract Value: $2,672,764.52**

JIM MOORE 954-630-4432 JIMM@OAKLANDPARKFL.GOV

SCOPE OF WORK: INSTALLATION OF 8" DUCTILE WM INSTALLATION OF 18", 24", AND 36" DRAINAGE AND FRENCH DRAIN, COMPLETE ROAD REHABILITATION, 8" SEWER MAIN REPAIRS, MILL AND OVERLAY

COMPLETED: AUGUST 2017

**CITY OF POMPANO BEACH: ESQUIRE LAKE NEIGHBORHOOD IMPROVEMENTS**
**CONTRACT AMOUNT $2,829,223.34**
**OWNER: CITY OF POMPANO BEACH**
**2019**

NOTICE TO PROCEED: 04/01/2019

SCOPE OF WORK: INSTALLATION OF 49 INLET STRUCTURES, 3,815 LF RCP/PVC DRAINAGE PIPE (15" TO 42" DIAMETER) 3,883 LF EXFILTRATION TRENCH, INLET WEIRS, LAKE OUTFALLS, STORMWATER BYPASS PUMPING, EROSION PROTECTION MEASURES AND TURBIDITY BARRIERS, ENDWALLS, 16,218 SY SWALE RE-GRADING AND SODDING, TREE PROTECTION, IRRIGATION, REALIGNMENT OF EXISTING WATERMAIN DRAINAGE INLET CONFLICTS; SIDEWALK, DRIVEWAY & MISCELLANEOUS RESTORATION, 6,960 SY OF ASPHALT PAVEMENT SECTION RESTORATION, SANITARY LATERAL RESTORATION, DEWATERING, REMOVAL OF EXISTING PAVEMENT, DRAINAGE PIPE AND INLETS.

Completed May 2020

**PALM BEACH COUNTY: South County Phase 5**
**8100 Forest Hill Blvd. West Palm Beach, FL 33413**
**CONTRACT AMOUNT $2,065,681.87**

JOSEPH TANACREDI P: 561-493-6088 E-mail: jtanacredi@pbcwater.com

SCOPE OF WORK: INSTALL APPROXIMATELY 12,000 LF OF 6" WM, 1,000 LF OF 8" WM, 4,000 LF OF 12" WATER MAIN, 8" AERIAL WATER MAIN CROSSING AND APPROXIAMTELY 285 WATER SERVICES.

COMPLETED: DECEMBER 2018

**CITY OF POMPANO BEACH: REUSE SYSTEM PHASE I**
**1205 NE 5TH AVE., POMPANO BEACH, FL 33060**
**CONTRACT AMOUNT $1,767,428.87**

TAMMY GOOD- PROJECT MANAGER III 954-650-7783, E-MAIL: TAMMY.GOOD1@COPBFL.COM

SCOPE OF WORK: 9,000 FT OF RECLAIMED WATER MAIN FROM 4" TO 16" DIAMETER, PROJECT ALSO INCLUDED TRENCH RESTORATION AND MILL & OVERLAY

COMPLETED: SEPTEMBER 2018

**TOWN OF LANTANA**
**510 W Pine Street, Lantana, FL 33462**
**CONTRACT AMOUNT $1,118,760.24**

**Project: South Lake Drive Forcemain Replacement, South 13th Place WM Replacement, Lantana Cove Stormwater Improvements**

Jerry Darr- Utilities Assitant Director P: 561-540-5758 E-mail: jdarr@lantana.org

SCOPE OF WORK: INSTALLATION OF 6" PVC C900 (DR18) FORCE MAIN, 6" PVC C900 (DR18) WATER MAIN AND DRAINAGE IMPROVEMENTS, DEWATERING

COMPLETED: MARCH 2019

**TARPON HARBOR**
**9805 OVERSEAS HIGHWAY, MARATHON, FL 33050**
**$1,174,000.00**

ANDREW TOPPINO, 305-797-5839 AJTOPPINO@GMAIL.COM

SCOPE OF WORK: WATER MAIN, FIRE MAIN, GRAVITY SEWER, AND VACUUM SEWER

COMPLETED NOVEMBER 2015

**CITY OF WESTON**
**2599 S POST RD, WESTON, FLORIDA 33069**
**$1.03 Million**

KARL THOMPSON- ASSITANT CITY MANAGER, 954-385-2600 KTHOMPSON@WESTON.ORG
EAC CONSULTING, INC., DONNA GRACE, 954-599-3710 DGRACE@EACONSULT.COM

**COUNTRY ISLES WATER SERVICE REPLACEMENT**

SCOPE OF WORK: REPLACE WATER SERVICES, MILL & OVERLAY, STRIPING, AND CONCRETE

COMPLETED OCTOBER 2015

**CITY OF LIGHTHOUSE POINT**
**CONTRACT AMOUNT $115,746.00**
**FRANK MCDONOUGH PARK**

CHARLES SCHRAMM, 954-650-7783, E-MAIL: CSCHRAMM@LIGHTHOUSEPOINT.COM

SCOPE OF WORK: DRAINAGE IMPROVEMENTS IN CITY PARK, WITH ASSOCIATED RESTORATION

COMPLETED: SEPTEMBER 2018

**BROWARD COUNTY WATER AND WASTEWATER SERVICES**
**2555 WEST COPANS ROAD, POMPANO BEACH, FLORIDA 33069**
**GIANNETTI CONTRACTING CORP., RICHARD GIBBS 954-999-2680**

**COUNTY NEIGHBORHOOD IMPROVEMENT PROJECT BID PACK #11 - BID NO. 1152/8629**

SCOPE OF WORK: LABOR ONLY 49,000 OF WATERMAIN, 45,000 LF OF RECLAIMED WATERMAIN, 29,350 LF OF RCP STORM SEWER WITH EXFILTRATION TRENCHES, 44,870 LF OF SANITARY SEWER UP TO 16' DEPTHS, 1630 LF OF FORCEMAIN, 750 SEWER LATERALS WITH PRIVATE SIDE SEWER TO HOMES, 780 WATER SERVICES INCLUDING PRIVATE PROPERTY CONNECTIONS TO EXISTING HOME. MAIN LINE PIPE RANGE IN SIZE FROM 4" TO 48" IN DIAMETER. 124,000 SY OF ROADWAY REPLACEMENT, 33,000 SY OF DRIVEWAY REPLACEMENT, 40,000 SY OF SIDEWALK REPLACEMENT AND 122,000 SY OF SOD AND SWALE RESTORATION.

COMPLETED SEPTEMBER 2014

**UAZ 303 WATER & SEWER IMPROVEMENTS**

SCOPE OF WORK: LABOR ONLY 3,400 LF OF GRAVITY SANITARY SEWER, WITH 18 LATERALS AND MODIFICATIONS OF 2 LIFT STATIONS, 8,000 LF OF 4" - 16" WATER MAIN, 34 WATER SERVICES, CUTTING CAPPING, AND ABANDONMENT OF EXISTING WATER MAINS

COMPLETED MARCH 2012

**UAZ 307 & 315 WATER & SEWER IMPROVEMENTS**

SCOPE OF WORK: LABOR ONLY 17,000 LF OF 8"- 12" GRAVITY SEWER, 340 SEWER LATERALS, 20,000 LF OF 6" - 12" WATER MAIN, 290 WATER SERVICES, ABANDON OF 22,000 LF OF EXISTING WATER MAIN, PROPOSED LIFT STATION, REPLACEMENT OF PUMPS AT EXISTING LIFT STATIONS, 2000 LF OF FORCEMAIN, ROADWAY EXCAVATION AND REPLACEMENT OF BASE AND ASPHALT APPROXIMATELY 49,000 SY

COMPLETED NOVEMBER 2011

**CITY OF NORTH LAUDERDALE**
**701 SOUTHWEST 71ST AVENUE, NORTH LAUDERDALE, FLORIDA 33068**
**GIANNETTI CONTRACTING CORP., RICHARD GIBBS 954-999-2680**
**HIGHLAND COURT IMPROVEMENTS**

SCOPE OF WORK: LABOR ONLY WATERMAIN WITH SERVICES, STORM SEWER, SANITARY SEWER WITH LATERALS, PARKING LOT REPLACEMENT, CONCRETE CURBS GUTTERS AND SIDEWALKS FOR HIGHLAND COURT COMPLEX

COMPLETED JANUARY 2013

**PALM BEACH COUNTY WATER UTILITIES DEPARTMENT**
**8100 FOREST HILL BOULEVARD, WEST PALM BEACH, FLORIDA 33413**
**GIANNETTI CONTRACTING CORP., RICHARD GIBBS 954-999-2680**
**$677,000.00**

**BELVEDERE HOMES PHASE 2**

SCOPE OF WORK: LABOR ONLY 5,800 LF OF 15" - 48" STORM SEWER, 16,000 LF OF WATERMAIN 8" - 12" DIAMETER, 14,000 LF OF 8" VACUUM SEWER, VACUUM PITS AND LATERALS, WATER SERVICES, ROADWAY RESTORATION, SWALE GRADING

COMPLETED FEBRUARY 2013

**CITY OF FORT LAUDERDALE**
**100 NORTH ANDREWS AVENUE, FORT LAUDERDALE, FLORIDA 33301**
**GIANNETTI CONTRACTING CORP., RICHARD GIBBS 954-999-2680**

**SHADY BANKS SMALL WATER MAIN REPLACEMENT PROJECT # 11471**

SCOPE OF WORK: LABOR ONLY 7,000 LF OF 6" - 8" WATER MAIN REPLACEMENT, WITH 134 WATER SERVICES, ASPHALT TRENCH PATCH, ASPHALT OVERLAY, CUT PLUG AND GROUT ABANDONMENT OF EXISTING WATER MAINS

COMPLETED JANUARY 2014

**CITY OF HOLLYWOOD**
**2600 HOLLYWOOD, FLORIDA 33021**
**GIANNETTI CONTRACTING CORP., RICHARD GIBBS 954-999-2680**
**$1.37 Million**

**WATER MAIN PROGRAM PHASE 1 HOLLYWOOD BLVD TO JOHNSON ST FROM N 46TH AVE TO N 52ND AVE**

SCOPE OF WORK: LABOR ONLY 27,000 LF OF 4" - 12" WATERMAIN WITH 150 WATER SERVCES, CUT, CAP AND GROUT ABANDONMENT OF EXISTING WATERMAINS, ASPHALT TRENCH REPLACEMENT, AND ASPHALT OVERLAY

COMPLETED JULY 2014

**WATER MAIN REPLACEMENT PROGRAM PHASE II, N 72ND AVE TO N76TH AVE FROM POLK ST TO JOHNSON ST PROJECT # 12-5116**

**$677,000.00**

SCOPE OF WORK: LABOR ONLY, INSTALLATION OF 27,000 LF OF NEW WATER MAIN AND 605 WATER SERVICES. MAIN LINE PIPE SIZES RANGED FROM 6" TO 12" IN DIAMETER

COMPLETED OCTOBER 2015

**CUDJOE, SUMMERLAND, AND UPPER SUGARLOAF KEYS, FLORIDA**
**$1.5 Million**

GIANNETTI CONTRACTING CORP., RICHARD GIBBS, 954-999-2680

**CUDJOE REGIONAL WASTEWATER INNER ISLANDS COLLECTION SYSTEM & TRANSMISSION SYSTEM**

SCOPE OF WORK: LABOR ONLY, INSTALLATION OF 4,000 LF OF NEW WATER MAIN, 99,000 LF OF GRAVITY SEWER, 1,783 SEWER LATERALS, 32 AREA LIFT STATIONS, 157,000 LF OF FORCE MAIN, 416 GRINDER PUMP STATIONS, 2 BRIDGE CROSSINGS, AND 2 MASTER LIFT STATIONS. MAIN LINE PIPE SIZES RANGED FROM 2" TO 16" IN DIAMETER.

COMPLETED DECEMBER 2015

**MONROE COUNTY**
**1.37 Million**

GIANNETTI CONTRACTING CORP., RICHARD GIBBS, 954-999-2680

CULVERT CONNECTION CANAL #227

SCOPE OF WORK: LABOR ONLY 200 LINEAR FEET OF 60 INCH DRAINAGE PIPE WITH 2 ENDWALLS

COMPLETED APRIL 2016

**HARD ROCK STADIUM**
**2.5 Million**

M&M ASPHALT MAINTENANCE INC. MIKE ACETI 561-513-3815

SCOPE OF WORK: LABOR ONLY 120 LF OF 16 INCH DIP, 12 WET TAP & HYDRANT INSTALLATIONS, 3600 LF OF 36 INCH DRAINAGE AND 54 MANHOLES AND CATCH BASES

COMPLETED JUNE 2017

**CITY OF HOLLYWOOD WATER MAIN REPLACEMENT PROJECT 13-5119**
**CONTRACT AMOUNT $3,000,000**

GIANNETTI CONTRACTING CORP., RICHARD GIBBS, 954-999-2680

SCOPE OF WORK: INSTALLATION OF WATER MAIN
SCOPE OF WORK: LABOR ONLY: INSTALL 116,000 LF OF WATERMAIN AND DRAINAGE. MAIN LINE RANGED IN SIZE FROM 4" TO 48". PROJECT ALSO INCLUDED 945 WATER SERVICES AND ABANDONMENT OF EXISTING WATERMAINS.

COMPLETED MARCH 2018

**CITY OF HOLLYWOOD WATER MAIN REPLACEMENT PROJECT 13-5119**
**CONTRACT AMOUNT $3,000,000**

GIANNETTI CONTRACTING CORP., RICHARD GIBBS, 954-999-2680

SCOPE OF WORK: INSTALLATION OF WATER MAIN
SCOPE OF WORK: LABOR ONLY: INSTALL 116,000 LF OF WATERMAIN AND DRAINAGE. MAIN LINE RANGED IN SIZE FROM 4" TO 48". PROJECT ALSO INCLUDED 945 WATER SERVICES AND ABANDONMENT OF EXISTING WATERMAINS.

COMPLETED MARCH 2018

**DBF CONSTRUCTION LLC**
**CURRENT CONTRACTS**

**BROWARD COUNTY : FLL GREEN BELT PARK IRRIGATION MAIN EXTENSION**
**CONTRACT AMOUNT: $1,327,293.75**
**OWNER: BROWARD COUNTY**
**2019-2020**

SCOPE OF WORK: CONSTRUCTION, FURNISHING AND INSTALLATION OF THE PROXIMATELY 6,000 LF OF 8" AND 4" IRRIGATION TRANSMISSION SYSTEM. THE IRRIGATION MAIN INSTALLATION INCLUDES CROSSING UNDER THE FEC AND FDOT RIGHT-OF-WAY WITH TWO DIRECTIONAL DRILL OPERATIONS AND TWO JACK AND BORE OPERATIONS. THE MAIN WILL ALSO BE INTERCONNECTED AT THE SEVEN LOCATIONS. UPGRDES MADE TO THE EXISTING IRRIGATION PUMP LOCATED AT THE NE POND AND ALSO THE INSTALLATION OF A NEW BOOSTER PUMP AT THE SOUTH GREEN BELT BUFFER PRIOR TO CONNECTION TO THE EXISTING SYSTEM. UPGRADE, PROGRAMING MAXICOM SYSTEM.

**CITY OF GREENACRES**
**CONTRACT AMOUNT 276,765.50**
**OWNER: CITY OF GREENACRES, LAKE WORTH DRAINAGE DISTRICT**
**2020**
**PERCENTAGE COMPLETE: 95%**

SCOPE OF WORK: DREDGING CANALS, RE-SLOPPING OF CANAL EMBARKMENTS, DRAINAGE HEAD WALLS, RE-STRUCTURING, RE-SLOPPING, DEMUCKING EXISTING CITY OF LAKE WORTH DRAINAGE CANALS,

**CITY OF NORTH MIAMI**
**CONTRACT AMOUNT: $441,049.00**
**PROJECT: WATER MAIN IMPROVEMENT PROJECT NW 8TH AVENUE**
**2020**

SCOPE OF WORK: CONSTRUCTION OF A NEW 8-INCH DIAMETER C-900 WATER MAIN TO REPLACE THE EXISTING 6-INCH ACP AND 2 INCH GALVANIZED STEEL PIPES. RELOCATION OF WATER METERS FROM REAR OF THE PLOTS TO FRONT OF LOTS, THE ADDITION OF FIRE HYDRANTS AND RIGHT OF WAY UTILITY EASEMENT RESTORATION.

**CITY OF PLANTATION: GOLF ESTATES DRAINAGE IMPROVEMENTS**
**CONTRACT AMOUNT $308,012.00**

SCOPE OF WORK: INCORPORATE THE REPLACEMENT OF EXISTING STORM DRAINAGE STRUCTURES AND PIPES LOCATED WITHIN CITY RIGHT-OF-WAY THROUGHOUT THE NEIGHBORHOODS CAST IN PLACE PIPE TECHNOLOGY WILL ALSO BE USED FOR EXISTING OUTFALL PIPES LOCATED IN DRAINAGE EASEMENTS BETWEEN HOMES. A FEW EXISTING OUTFALL PIPES BETWEEN HOMES ARE UNDERSIZED AND WILL BE REPLACES WITH LARGER PIPES UTILIZING PIPE BURSTING TECHNOLOGY.

DBF CONSTRUCTION, LLC
Equipmpent List

| ITEM # | DESCRIPTION OF EQUIPMENT |
|---|---|
| 1 | CATERPILLAR 308ECRSB HYDRAULIC EXCAVATOR |
| 2 | WACKER NEUSON VIBROPLATE BPU4045A |
| 3 | 2016 HUSQVARNA STREET SAW FS400LV |
| 4 | 2017 VOLVO CRAWLER EXCAVATOR W/3 ACCESSORIES-2013 VOLVO 43" 1.26 YD3 DF BUCKET & 2016 C&P 30" CORAL ROCK BUCKET |
| 5 | 2015 VOLVO WHEEL LOADER L70H622270 W/2 ATTACHEMENTS 2015 VOLVO 10 4" 2.9YD3 BUCKET & 2013 VOLVO 59" FRAME W/72 FORKS |
| 6 | 2007 CATERPILLAR CB214E TANDEM VIBRATORY ROLLER |
| 7 | 2011 INGERSOLL RAND LIGHT SOURCE LIGHT TOWER |
| 8 | 2011 INGERSOLL RAND LIGHT PORTABLE LIGHT TOWER |
| 9 | 2001 KUBOTA RTV900 4X4 |
| 10 | PIPE LASER DG813 W/SPORT FINDER & ATTACHMENTS |
| 11 | 2018 VOLVO L60H |
| 12 | 2017 JOHN DEER 317G COMPACT TRACK LOADER |
| 13 | 2012 ATLASCOPCO COMPRESSOR 175-195 CFM |
| 14 | SPECTRA PIPE LASER DG813 WITH ATTACHMENTS SPOT FINDER REM CONTROL, LSR TARGET HEAD, ALUM TUBE INS F/STORY POLE & SOTRY POLE W/LVL |
| 15 | WACKER NEUSON VIBROPLATE COMPACTOR |
| 16 | COMPACT EXCAVATOR WITH 24 PIN-ON BUCKET WITH TEETH |
| 17 | TRACK LOADER |

# Village of Palm Springs

# Executive Brief

**AGENDA DATE:** May 13, 2021

**DEPARTMENT:** Public Service

---

**ITEM 6.9:** Approve Roadway Asphalt Milling & Resurfacing Contract - Work Authorization No. 3 - Piggyback - Public Service Department - (FY 2021 Budget Funded - General Fund) - Ranger Construction Industries, Inc.

**SUMMARY:**

The Pubic Service Department is recommending that six (6) roadway segments throughout the Village be milled and resurfaced based on visual inspection and rating by staff (see attached map). These roadways are currently paved; however, they maintain significant pavement deterioration and are recommended to be milled and resurfaced to extend their service life.

As a result, the Public Service Department is recommending that the following six (6) roadways be approved to be milled and resurfaced utilizing the Village's existing (piggybacked) contract with Ranger Construction Industries, Inc. in the amount of $192,136:

| |
|---|
| Rostan Lane |
| Mid Pines Road |
| Longfellow Drive |
| Henthorne Drive (N. of Greenbrier Drive) |
| Cavalier Road |
| Lanier Drive |

Note: To ensure the lowest possible price, staff is recommending that the Village utilize our existing agreement, which was piggybacked off the current Palm Beach County contract, that was awarded by PBC to Ranger Construction Industries on October 12, 2018. This selection by Palm Beach County was completed through a competitive selection process - Palm Beach

County Annual Milling and Resurfacing Contract (ITB #R2018-1533 - Project Number 2018051 - July 8, 2018).

The Village accepted Ranger Construction Industries' pricing as approved under Palm Beach County's contract, including all terms, conditions and pricing therein. The term of the Palm Beach County contract is set to expire on October 15, 2021, and there is a renewal option to extend the contract up to six (6) months. The Village will not expend more than the amount within the approved Budget as it may be adopted/amended each year for these goods and services over the term of this contract.

Note: All original bid documents authorizing the initial piggyback and renewal agreements with Ranger Construction Industries, Inc. are available in the Village Clerk's Office.

The Village's Purchasing Code, Section 58-9, Accessing Contracts of Other Government Agencies, provides that the Village may award a contract by piggy-backing or accessing the goods and/or services from any State of Florida contract; contracts of any Florida political subdivision; or from any other governmental entity (other than the Federal government); provided that the same or substantially similar goods and/or services were competitively solicited.

If approved, the proposed project is expected to be completed by the end of September 2021.

The proposed project Work Authorization No. 3 was prepared by the Village Attorney and reviewed by the the Assistant Public Service Director/Engineering, the Public Works Superintendent and the Finance Director.

The Village has previously worked with the proposed contractor and has received excellent service and a quality product.

**FISCAL IMPACT:**

Funding to support this road resurfacing project is available within the FY 2021 Budget - General Fund.

| **Allocated/Estimated Project Funding** | |
|---|---|
| FY 2021 Approved Budget - General Fund - Road Resurfacing | $225,000 |
| FY 2021 Approved Budget - General Fund - Road Restriping | $ 25,000 |
| **TOTAL APPROVED BUDGET** | **$250,000** |
| | |
| **Expected/Project Costs** | |
| Proposed Project Cost - Construction - Road Repaving (Work Authorization #3) | $192,136 |

| | |
|---|---|
| Estimated Project Cost - Construction - Road Restriping (Work Authorization #3) | $ 25,000 |
| **TOTAL EXPECTED PROJECT COSTS** | **$217,136** |

Note: The proposed re-striping of the improved roads will be presented for consideration by the Village Council during an upcoming Council Meeting (expected June/July 2021).

The Village will not expend more than the amount within the approved budget as it may be adopted/amended each year for these goods and services over the term of this contract.

**ATTACHMENTS:**

Proposed Work Authorization No 3 - Roadway Milling and Resurfacing - Ranger Construction Industries

Map - Proposed Roadway Segments to be Milled & Paved - FY 2021

**PROJECT WORK AUTHORIZATION NO. 3 WITH RANGER CONSTRUCTION FOR MILLING AND RESUFACING PROJECTS**

This Project Work Authorization No. 3 is made as of the _____ day of _____, 2021, by and between the **Village of Palm Springs**, 226 Cypress Lane, Palm Springs, Florida 33461-1699, a municipal corporation organized and existing under the laws of the State of Florida, hereinafter referred to as the "Village", and **Ranger Construction Industries, Inc.**, 101 Sansbury's Way, West Palm Beach, FL 33411, a corporation authorized to do business in the State of Florida, hereinafter referred to as the "Contractor".

**1.0 Project Description**:

The Public Service Department has identified a need to mill and resurface several roadways throughout the Village.

The Village desires the Contractor to provide the milling and resurfacing of the following streets:

1. Rostan Lane;
2. Mid Pines Road;
3. Longfellow Drive;
4. Henthorne Drive;
5. Cavalier Road;
6. Lanier Drive;

**2.0 Scope**

Under this Project Work Authorization, the Contractor will provide the construction services to the Village as detailed in the **Contractor's proposal attached hereto and incorporated herein as Exhibit "A"**.

**3.0 Schedule**

The services to be provided under this Project Work Authorization shall be completed within ninety (90) calendar days from the Village's issuance of a Notice to Proceed.

**4.0 Compensation**

This Project Work Authorization is issued for a not to exceed price in the amount of $192,136.00. The attached proposal identifies all costs and expenses included in the not to exceed amount.

**5.0 Authorization**

This Project Work Authorization is issued pursuant to the Agreement for milling and resurfacing services between the Village and the Contractor, dated July 23, 2020. If there are any conflicts between the terms and conditions of this Project Work Authorization and the Agreement, the terms and conditions of the Agreement shall prevail.

IN WITNESS WHEREOF, the Village and Contractor have caused this Project Work Authorization No. 3 to be executed the day and year shown above.

**VILLAGE OF PALM SPRINGS, FLORIDA**

By: _____
Bev Smith, Mayor

ATTEST

_____
Kim Wynn, Village Clerk

Approved as to form and legal sufficiency:

_____
Glen J. Torcivia, Village Attorney

CONTRACTOR: **RANGER CONSTRUCTION INDUSTRIES, INC.**

By: _____

Print Name: _____

Title: _____

[Corporate Seal]

STATE OF FLORIDA )
COUNTY OF _____)

The foregoing instrument was acknowledged before me this _____ day of _____, 2019 by_____, as _____ of Ranger Construction Industries, Inc., a corporation authorized to do business in the State of Florida, and who is personally known to me or who has produced the following _____ as identification.

Notary Public

_____
Print Name: _____
My commission expires:_____

Central Division 9400
101 Sansbury's Way 4332
West Palm Beach, FL 33411 l.com
Phone: (561) 793-9400
Fax: (561) 790-4332
www.rangerconstruction.com

# QUOTATION REQUEST

| | | | |
|---|---|---|---|
| **Submitted To:** | Village of Palm Springs | **Date:** | 11-Feb-21 |
| | | **Phone:** | (561) 641-3440 |
| **Address:** | 226 Cypress Lane | **Fax:** | |
| | Palm Springs, FL 33461 | **Job Name:** | Resurfacing Village of Palm Springs |
| | | **Job Location:** | Village of Palm Springs |
| **Contact:** | James H. Schmitz | **Prop. Owned By:** | |

## ROSTAN RD

**NOTE: QUANTITIES(TONS) HAVE BEEN INCREASED BY 10% TO SERVE AS A CONTINGENCY (Per VPS request)**

| ITEM No. | DESCRIPTION | QUANTITY | UNIT | UNIT PRICE | EXTENSION |
|---|---|---|---|---|---|
| 30 | Superpave asph.conc.SP 9.5 lev C or Type SIII (0-500 Tons order) Residential Roadways | 178.00 | TN | $131.00 | $23,318.00 |
| 27 | Mill existing asphalt pvmt (<5,000 SY) Residential Roadways | 1.00 | 1/2 D | $8,000.00 | $8,000.00 |
| 26 | Portable Milling machine | 8.00 | HR | $230.00 | $1,840.00 |
| | | | | TOTAL | **$33,158.00** |

Special Note(s):
1) Asphalt prices based on Annual Asphalt milling and resurfacing PBC 2018051
2) Quantities based on preliminary information, billing based on final quantities verified from plant weight tickets.
3) Asphalt quantity based on an average yield of 120 lb/sy of 1" laydown. (2695 SY)
4) This quotation does not include permanent Striping.

| | | | |
|---|---|---|---|
| ACCEPTED: | | CONFIRMED: | |
| The above prices, specifications and conditions are satisfactory and are hereby accepted. | | **Ranger Construction Industries, Inc.** | |
| Buyer | _____ | | |
| Signature | _____ | Authorized Signature | _____ |
| Date Accepted | _____ | Name & Title | **Beatriz Ramirez, Estimator** |

Central Division 9400
101 Sansbury's Way 4332
West Palm Beach, FL 33411 l.com
Phone: (561) 793-9400
Fax: (561) 790-4332
www.rangerconstruction.com

# QUOTATION REQUEST

| | | | |
|---|---|---|---|
| **Submitted To:** | Village of Palm Springs | **Date:** | 11-Feb-21 |
| | | **Phone:** | (561) 641-3440 |
| **Address:** | 226 Cypress Lane | **Fax:** | |
| | Palm Springs, FL 33461 | **Job Name:** | Resurfacing Village of Palm Springs |
| | | **Job Location:** | Village of Palm Springs |
| **Contact:** | James H. Schmitz | **Prop. Owned By:** | |

## MID PINES RD

**NOTE: QUANTITIES(TONS) HAVE BEEN INCREASED BY 10% TO SERVE AS A CONTINGENCY (Per VPS request)**

| ITEM No. | DESCRIPTION | QUANTITY | UNIT | UNIT PRICE | EXTENSION |
|---|---|---|---|---|---|
| 30 | Superpave asph.conc.SP 9.5 lev C or Type SIII (0-500 Tons order) Residential Roadways | 182.00 | TN | $131.00 | $23,842.00 |
| 27 | Mill existing asphalt pvmt (<5,000 SY) Residential Roadways | 1.00 | 1/2 D | $8,000.00 | $8,000.00 |
| 26 | Portable Milling machine | 8.00 | HR | $230.00 | $1,840.00 |
| | | | | SUBTOTAL | **$33,682.00** |

Special Note(s):
1) Asphalt prices based on Annual Asphalt milling and resurfacing PBC 2018051
2) Quantities based on preliminary information, billing based on final quantities verified from plant weight tickets.
3) Asphalt quantity based on an average yield of 120 lb/sy of 1" laydown. (2,762 SY)
4) This quotation does not include permanent Striping.

| | | | |
|---|---|---|---|
| ACCEPTED: | | CONFIRMED: | |
| The above prices, specifications and conditions are satisfactory and are hereby accepted. | | **Ranger Construction Industries, Inc.** | |
| Buyer | _____ | | |
| Signature | _____ | Authorized Signature | _____ |
| Date Accepted | _____ | Name & Title | **Beatriz Ramirez, Estimator** |

Central Division
101 Sansbury's Way
West Palm Beach, FL 33411
Phone: (561) 793-9400
Fax: (561) 790-4332
www.rangerconstruction.com

# QUOTATION REQUEST

| | | | |
|---|---|---|---|
| **Submitted To:** | Village of Palm Springs | **Date:** | 17-Feb-21 |
| | | **Phone:** | (561) 641-3440 |
| **Address:** | 226 Cypress Lane | **Fax:** | |
| | Palm Springs, FL 33461 | **Job Name:** | Resurfacing Village of Palm Springs |
| | | **Job Location:** | Village of Palm Springs |
| **Contact:** | James H. Schmitz | **Prop. Owned By:** | |

## LONGFELLOW DR

**NOTE: QUANTITIES(TONS) HAVE BEEN INCREASED BY 10% TO SERVE AS A CONTINGENCY (Per VPS request)**

| ITEM No. | DESCRIPTION | QUANTITY | UNIT | UNIT PRICE | EXTENSION |
|---|---|---|---|---|---|
| 30 | Superpave asph.conc.SP 9.5 lev C or Type SIII (0-500 Tons order) Residential Roadways | 224.00 | TN | $131.00 | $29,344.00 |
| 27 | Mill existing asphalt pvmt (<5,000 SY) Residential Roadways | 1.00 | 1/2 D | $8,000.00 | $8,000.00 |
| 26 | Portable Milling machine | 8.00 | HR | $230.00 | $1,840.00 |
| | | | | TOTAL | **$39,184.00** |

Special Note(s):
1) Asphalt prices based on Annual Asphalt milling and resurfacing PBC 2018051
2) Quantities based on preliminary information, billing based on final quantities verified from plant weight tickets.
3) Asphalt quantity based on an average yield of 120 lb/sy of 1" laydown. ( 3,400 SY)
4) This quotation does not include permanent Striping.

| | | | |
|---|---|---|---|
| ACCEPTED: | | CONFIRMED: | |
| The above prices, specifications and conditions are satisfactory and are hereby accepted. | | **Ranger Construction Industries, Inc.** | |
| Buyer | _____ | | |
| Signature | _____ | Authorized Signature | _____ |
| Date Accepted | _____ | Name & Title | **Beatriz Ramirez, Estimator** |

Central Division
101 Sansbury's Way
West Palm Beach, FL 33411
Phone: (561) 793-9400
Fax: (561) 790-4332
www.rangerconstruction.com

# QUOTATION REQUEST

| | | | |
|---|---|---|---|
| **Submitted To:** | Village of Palm Springs | **Date:** | 11-Feb-21 |
| | | **Phone:** | (561) 641-3440 |
| **Address:** | 226 Cypress Lane | **Fax:** | |
| | Palm Springs, FL 33461 | **Job Name:** | Resurfacing Village of Palm Springs |
| | | **Job Location:** | Village of Palm Springs |
| **Contact:** | James H. Schmitz | **Prop. Owned By:** | |

## HENTHORNE DR

**NOTE: QUANTITIES(TONS) HAVE BEEN INCREASED BY 10% TO SERVE AS A CONTINGENCY (Per VPS request)**

| ITEM No. | DESCRIPTION | QUANTITY | UNIT | UNIT PRICE | EXTENSION |
|---|---|---|---|---|---|
| 30 | Superpave asph.conc.SP 9.5 lev C or Type SIII (0-500 Tons order) Residential Roadways | 111.00 | TN | $131.00 | $14,541.00 |
| 27 | Mill existing asphalt pvmt (<5,000 SY) Residential Roadways | 1.00 | 1/2 D | $8,000.00 | $8,000.00 |
| 26 | Portable Milling machine | 8.00 | HR | $230.00 | $1,840.00 |
| | | | | SUBTOTAL | **$24,381.00** |

Special Note(s):
1) Asphalt prices based on Annual Asphalt milling and resurfacing PBC 2018051
2) Quantities based on preliminary information, billing based on final quantities verified from plant weight tickets.
3) Asphalt quantity based on an average yield of 120 lb/sy of 1" laydown. (1,686 SY)
4) This quotation does not include permanent Striping.

| | |
|---|---|
| ACCEPTED:<br>The above prices, specifications and conditions are satisfactory and are hereby accepted. | CONFIRMED:<br>**Ranger Construction Industries, Inc.** |
| Buyer _____ | |
| Signature _____ | Authorized Signature _____ |
| Date Accepted _____ | Name & Title **Beatriz Ramirez, Estimator** |

Central Division 9400
101 Sansbury's Way 4332
West Palm Beach, FL 33411 l.com
Phone: (561) 793-9400
Fax: (561) 790-4332
www.rangerconstruction.com

# QUOTATION REQUEST

| | | | |
|---|---|---|---|
| **Submitted To:** | Village of Palm Springs | **Date:** | 11-Feb-21 |
| | | **Phone:** | (561) 641-3440 |
| **Address:** | 226 Cypress Lane | **Fax:** | |
| | Palm Springs, FL 33461 | **Job Name:** | Resurfacing Village of Palm Springs |
| | | **Job Location:** | Village of Palm Springs |
| **Contact:** | James H. Schmitz | **Prop. Owned By:** | |

## CAVALIER RD

**NOTE: QUANTITIES(TONS) HAVE BEEN INCREASED BY 10% TO SERVE AS A CONTINGENCY (Per VPS request)**

| ITEM No. | DESCRIPTION | QUANTITY | UNIT | UNIT PRICE | EXTENSION |
|---|---|---|---|---|---|
| 30 | Superpave asph.conc.SP 9.5 lev C or Type SIII (0-500 Tons order) Residential Roadways | 182.00 | TN | $131.00 | $23,842.00 |
| 27 | Mill existing asphalt pvmt (<5,000 SY) Residential Roadways | 1.00 | 1/2 D | $8,000.00 | $8,000.00 |
| 26 | Portable Milling machine | 8.00 | HR | $230.00 | $1,840.00 |
| | | | | TOTAL | **$33,682.00** |

Special Note(s):
1) Asphalt prices based on Annual Asphalt milling and resurfacing PBC 2018051
2) Quantities based on preliminary information, billing based on final quantities verified from plant weight tickets.
3) Asphalt quantity based on an average yield of 120 lb/sy of 1" laydown. (2,762 SY)
4) This quotation does not include permanent Striping.

| | | | |
|---|---|---|---|
| ACCEPTED: | | CONFIRMED: | |
| The above prices, specifications and conditions are satisfactory and are hereby accepted. | | **Ranger Construction Industries, Inc.** | |
| Buyer | _____ | | |
| Signature | _____ | Authorized Signature | _____ |
| Date Accepted | _____ | Name & Title | **Beatriz Ramirez, Estimator** |

Central Division 9400
101 Sansbury's Way 4332
West Palm Beach, FL 33411 l.com
Phone: (561) 793-9400
Fax: (561) 790-4332
www.rangerconstruction.com

# QUOTATION REQUEST

| | | | |
|---|---|---|---|
| **Submitted To:** | Village of Palm Springs | **Date:** | 11-Feb-21 |
| | | **Phone:** | (561) 641-3440 |
| **Address:** | 226 Cypress Lane | **Fax:** | |
| | Palm Springs, FL 33461 | **Job Name:** | Resurfacing Village of Palm Springs |
| | | **Job Location:** | Village of Palm Springs |
| **Contact:** | James H. Schmitz | **Prop. Owned By:** | |

## LANIER DR

**NOTE: QUANTITIES(TONS) HAVE BEEN INCREASED BY 10% TO SERVE AS A CONTINGENCY (Per VPS request)**

| ITEM No. | DESCRIPTION | QUANTITY | UNIT | UNIT PRICE | EXTENSION |
|---|---|---|---|---|---|
| 30 | Superpave asph.conc.SP 9.5 lev C or Type SIII (0-500 Tons order) Residential Roadways | 139.00 | TN | $131.00 | $18,209.00 |
| 27 | Mill existing asphalt pvmt (<5,000 SY) Residential Roadways | 1.00 | 1/2 D | $8,000.00 | $8,000.00 |
| 26 | Portable Milling machine | 8.00 | HR | $230.00 | $1,840.00 |
| | | | | TOTAL | **$28,049.00** |

Special Note(s):
1) Asphalt prices based on Annual Asphalt milling and resurfacing PBC 2018051
2) Quantities based on preliminary information, billing based on final quantities verified from plant weight tickets.
3) Asphalt quantity based on an average yield of 120 lb/sy of 1" laydown. (2,105 SY)
4) This quotation does not include permanent Striping.

| | | | |
|---|---|---|---|
| ACCEPTED: | | CONFIRMED: | |
| The above prices, specifications and conditions are satisfactory and are hereby accepted. | | **Ranger Construction Industries, Inc.** | |
| Buyer | _____ | | |
| Signature | _____ | Authorized Signature | _____ |
| Date Accepted | _____ | Name & Title | **Beatriz Ramirez, Estimator** |

Google Maps

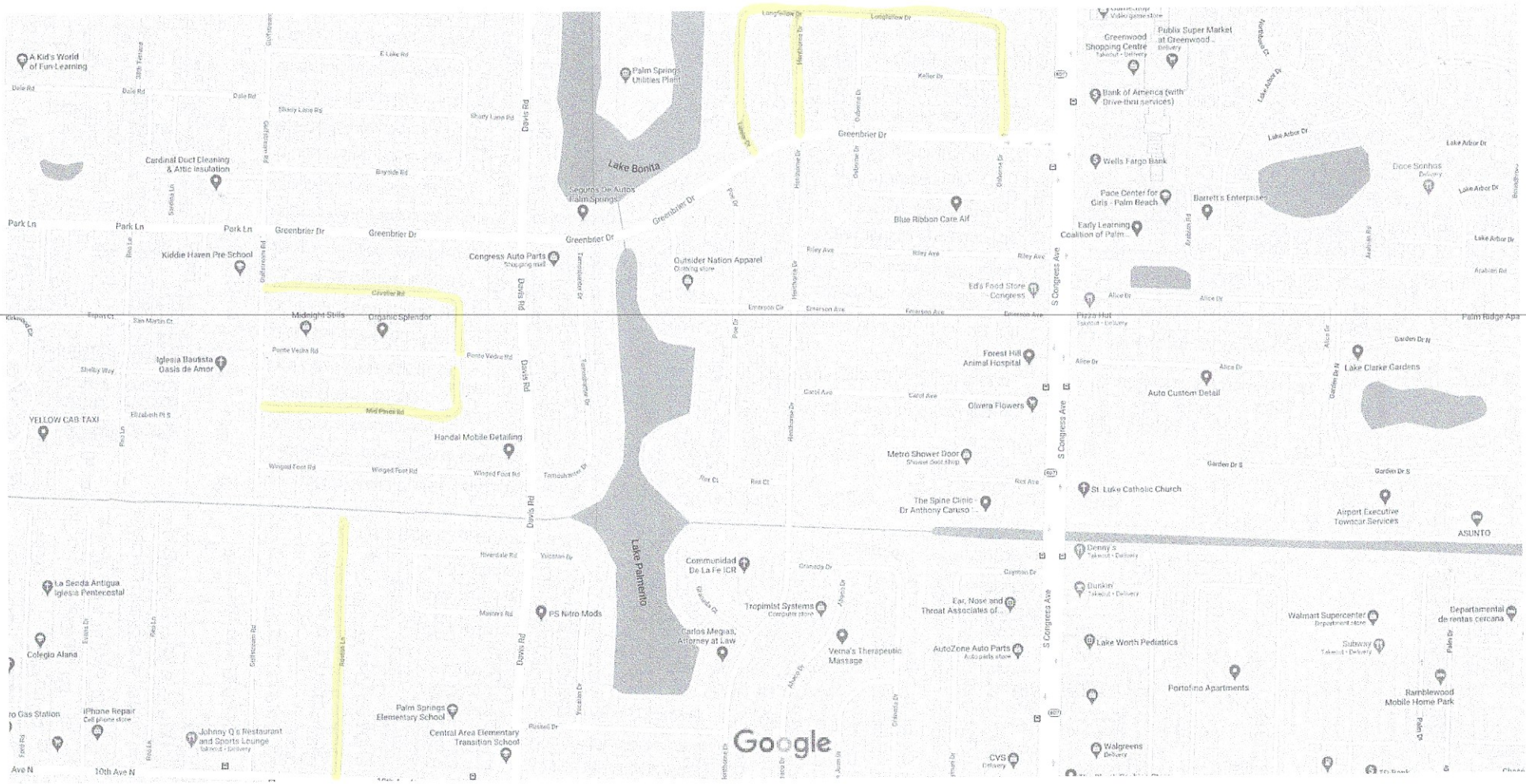


Map data ©2021 Google 200 ft

Google Maps

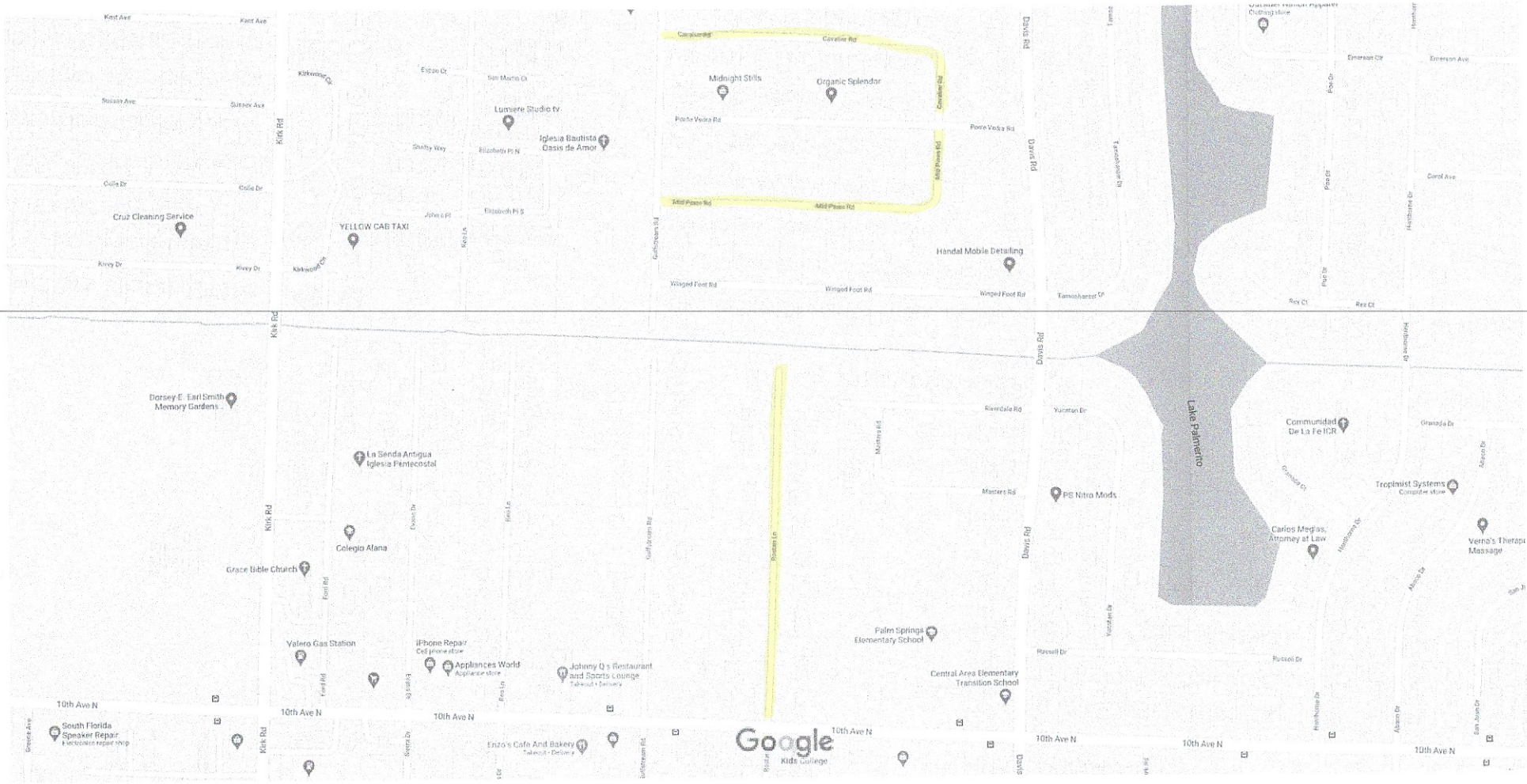
Midnight Stills
Organic Splendor
Lumiere Studio tv
Iglesia Bautista Oasis de Amor
Cruz Cleaning Service
YELLOW CAB TAXI
Handal Mobile Detailing
Dorsey-E. Earl Smith Memory Gardens
La Senda Antigua Iglesia Pentecostal
Colegio Alana
Grace Bible Church
Valero Gas Station
iPhone Repair
Appliances World
Johnny Q's Restaurant and Sports Lounge
South Florida Speaker Repair
Enzo's Cafe And Bakery
Palm Springs Elementary School
Central Area Elementary Transition School
Lake Palmetto
Communidad De La Fe ICR
PS Nitro Mods
Tropinist Systems
Carlos Mejias, Attorney at Law
Kirk Rd
Davis Rd
Forest Rd
Masters Rd
Riverdale Rd
Russell Dr
10th Ave N
Google
Kids College
Map data ©2021 Google
200 ft

Google Maps


Longfellow Dr
Lanier Dr
Hemborne Dr
Osborne Dr
Longfellow Dr
Keller Dr
Lanier Dr
Hemborne Dr
Osborne Dr
Longfellow Dr
Lanier Dr
Greenbrier Dr
Greenbrier Dr
Greenbrier Dr
Greenbrier Dr
Greenbrier Dr
Hemborne Dr
Osborne Dr
Osborne Dr
Ainsworth Cir
Osborne Dr
Blue Ribbon Care Alf
S Congress Ave
S Congress Ave
S Congress Ave
Palm Springs Utilities Plant
Lake Bonita
Greenbrier Dr
Greenbrier Dr
Greenbrier Dr
Poe Dr
Emerson Cir
GameStop
Bank of America (with Drive-thru services)
Wells Fargo Bank
Google
Map data ©2021
100 ft

# Village of Palm Springs

# Executive Brief

**AGENDA DATE:** May 13, 2021

**DEPARTMENT:** Public Service

---

**ITEM 6.10:** Approve Change Order No. 2 (Task Order #240 - Work Authorization EE-U01 and Task Orders No. 266 and 278 - Work Authorization EE-U05) - Professional Engineering Services - Vacuum Station No. 1 Safety Improvements & Upgrades - Public Service Department (FY 2021 Budget - Water & Sewer Enterprise Fund) - Eckler Engineering, Inc.

**SUMMARY:**

On November 8, 2018, the Village Council approved Task Order #240 (Work Authorization EE-U01) with Eckler Engineering to provide professional engineering services associated with the development of the Vacuum Station No. 1 Safety Improvements & Upgrades (Professional Services and Design - Work Authorization EE-U05) located along Marilyn Drive. On February 13, 2020, the Village Council approved Change Order #1 to the approved Task Order #240 with Eckler Engineering in the amount of $4,635.00 to support the additional engineering and design services required to combine the previously approved plans for safety improvements (Task Order #240) with the additional proposed projects (Task Order No. 266 - Emergency Generator and Task Order No. 278 - Upgrade Vacuum Pumps) to be completed by Eckler Engineering.

Vacuum Station No. 1, which was constructed on Marilyn Drive in 1999, was the first wastewater vacuum pump station constructed by the Village. However, due to site constraints at the time of design and construction, this pump station was constructed on a small easement behind an automobile repair shop and only provided access by ladder through the top of the structure (which is partially buried). This access, though functional, creates a potentially hazardous work environment for our utilities staff who are entering/leaving the structure and carrying equipment into the station. As a result, a precast stairway entrance into the west side of the structure, which would provide the safest and most accessible access into the station, has been proposed and the engineering and design has begun by the Village's contracted engineer, Eckler Engineering (Task Order #240 - Approved November 8, 2019) .
Additionally, this Station provides collection services for a large service area and does not

have an on-site emergency power supply. Thus, during power outages the station is non-operational until staff delivers and utilizes a portable generator to the station to ensure proper wastewater collection. A permanent generator (Task Order No. 266) is proposed to be installed at the Vacuum Station to provide emergency power during a power failure (i.e., hurricane, etc.). In addition, Vacuum Station No. 1 is in need of replacing/upgrading the existing vacuum pumps (Task Order No. 278 - Request to be Approved), which provide the negative pressures required to operate the vacuum sewer system, with newer and more reliable vacuum pumps (that are recommended by AirVac - the designer and manufacturer of the vacuum system).These new pumps would require less maintenance and would replace the original style vacuum pumps that are still being utilized.
Note: In an effort to lower design and construction costs for this project (and to ensure vendor interest to take on this project) it has been recommended by Eckler Engineering and Village Staff to combine each of the three (3) task orders (No. 240, 266 and 278) and bid them as one, single project.

Currently, the Public Service Department is requesting approval of Change Order #2 to Task Order No. 240 and 266 (Work Authorization EE-U01 and Work Authorization EE-U05) for Eckler Engineering to provide additional engineering and design services to develop a sketch and legal description for a proposed easement that is necessary support a proposed emergency generator as well as additional engineering and design services that are a result of the Village going out to bid for a 3rd time (due to pricing/bids that were significantly over the Village's budgeted amount).

As a result, the Village's contracted engineer, Eckler Engineering, and the Public Service Department is recommending an amendment to the approved Task Order #240 (Change Order #2) with Eckler Engineering in the amount of $3,257 to support the additional engineering and design services required to provide a sketch and legal description for an emergency generator easement and updated bid documents (Task Order #240) with the additional proposed projects (Task Order No. 266 - Emergency Generator and Task Order No. 278 - Upgrade Vacuum Pumps).
The proposed tasks and associated costs to provide the professional engineering services to complete this project are as follows:

| **Work to be Completed** | **Amount** |
|---|---|
| Task Order 240 - Safety Improvements | $29,282.00 |
| Task Order 266 - Emergency Generator | $24,685.00 |
| Task Order 278 - Vacuum Pump Replacement | $17,592.00 |
| Change Order #1 - Revise Bid Documents & Coordination | $ 4,653.00 |
| Add: Proposed Change Order #2 - Prepare Sketch & Legal, Revise Bid Documents & Coordination | $ 3,257.00 |
| **Final Revised Contract Amount** | **$79,469.00** |

Note: The Village Council has approved funding ($326,685) within the FY 2021 Budget - Water & Sewer Enterprise Fund to support these three (3) projects (design and construction).

If approved, the revised total engineering design, bidding and construction services cost for the Vacuum Station No. 1 Safety Improvements & Upgrades Project within Task Order #240, 266 & 278 will be increased to $79,469.00. The Village will not expend more than the amount in the approved budget as it may be adopted/amended each year for these goods and services over the term of this contract.

No additional change orders are anticipated for this project.

It is estimated that the proposed Vacuum Station No. 1 Safety Improvements & Upgrades Project will require an additional 30 days (May-June 2021) of design work from the date the work authorization is issued to Eckler Engineering and construction is estimated to take approximately eight (8) months (April/May 2022) from the Notice to Proceed by the Village.

The proposed Change Order No. 2 (Task Order #240, #266, & #278) was prepared by Eckler Engineering and reviewed by the the Assistant Public Service Director/Engineer, the Village Project Manager, the Utilities Superintendent, the Assistant Village Manager, the Village Attorney and the Finance Director.

**FISCAL IMPACT:**

Funding to support the proposed Vacuum Station No. 1 Safety Improvements & Upgrades Project Change Order No. 2 to (Task Order #240 - Work Authorization EE-U01 and Task Orders No. 266 and 278 - Work Authorization EE-U05) is available within the FY 2021 Budget - Water & Sewer Enterprise Fund.

| ***Allocated/Estimated Project Funding*** | ***Amount*** |
|---|---|
| FY 2019 Actual - Water & Sewer Enterprise Fund - Building Safety Improvements (TO #240) | $ 15,435.00 |
| FY 2020 Actual - Water & Sewer Enterprise Fund - Building Safety Improvements (TO #240) | $ 7,568.40 |
| FY 2020 Actual - Water & Sewer Enterprise Fund - Emergency Generator (TO #266) | $ 13,500.00 |
| FY 2020 Actual - Water & Sewer Enterprise Fund - Vacuum Pump Upgrade (TO #278) | $ 9,614.40 |
| FY 2021 Approved Budget - Water & Sewer Enterprise Fund - Building Safety Improvements (TO #240) | $134,665.00 |
| FY 2021 Approved Budget- Water & Sewer Enterprise Fund - Emergency Generator (TO #266) | $118,566.00 |
| FY 2021 Approved Budget- Water & Sewer Enterprise Fund - Vacuum Pump Upgrade (TO #278) | $ 73,454.00 |
| **Total Allocated/Estimated Budget** | **$372,802.80** |

| ***Expected Project Costs - Engineering & Design Services :*** | ***Amount*** |
|---|---|
| Original Project Cost - Water & Sewer Enterprise Fund ( TO #240) | $ 29,282.00 |

| | |
|---|---|
| Change Order #1 - Water & Sewer Enterprise Fund (TO #240, #266 & #278) | $ 4,653.00 |
| Proposed Change Order #2 - Water & Sewer Enterprise Fund (TO #240 & #266) | $ 3,257.00 |
| **Total Project Request - Engineering & Design Services** | **$ 37,192.00** |
| | |
| ***Expected Project Costs - Construction Services :*** | |
| Projected Construction Cost - Water & Sewer Enterprise Fund (TO #240, 266, 278) | $452,000.00 |
| **Total Project Request – Construction Services** | **$452,000.00** |

| | |
|---|---|
| **TOTAL PROJECT REQUEST/COST (REVISED)** | **$531,469.00** |

The Village will not expend more than the amount within the approved budget as it may be adopted/amended each year for these goods and services over the term of this contract.

Note: Projected construction cost is based on engineer's preliminary opinion of cost estimate. The construction prices may increase above the original project cost estimate, but will be included in the FY 2022 budget for the Water & Sewer Enterprise Fund.

**ATTACHMENTS:**

Proposed Change Order No. 2 & Work Authorization EE-U01 & EE-05 - Eckler Engineering
Approved Change Order No. 1 & Work Authorization EE-U01 & EE-05 - Eckler Engineering
Approved Work Authorization EE-U01 & EE-05 - Eckler Engineering

ECKLER ENGINEERING, INC.

April 5, 2021 (Sent via email to: pward@vpsfl.org)
400-089.01

Mr. Paul Ward
Village of Palm Springs
226 Cypress Lane
Palm Springs, FL 33461

Dear Mr. Ward:

Reference: Engineering Scope Revision No. 1
Vacuum Pump Station No. 1 Improvements
Village P.O. #60, #62, & #63 (Task Orders #240, 266, 278)

This Scope Revision is being submitted for the additional work associated with obtaining the sketch and description for the easement necessary for the generator footprint. In addition, this Scope Revision includes additional fee associated with rebidding of the project due to high bids and underfunding. The rebid shall revise the Contract Documents to reflect updated dates, bid numbers and other general coordination. The anticipated work associated with this request is as follows:

1. Obtain sketch and description for easement necessary for generator footprint.

2. General rebid coordination with the Village and project management.

3. Revise the Specifications to reflect updated bid numbers, dates (bid advertisement, pre-pre-bid conference, bid opening, etc…), and front-end documents.

4. Revise the Drawings to reflect updated bid numbers and dates.

5. Bidding services for attending meetings (pre-bid and bid opening), site visit (if necessary), answering bidder questions, bid evaluation, and recommendation of award.

For the additional items summarized above, we request **$3,257.00** for the anticipated work effort. The attached spreadsheet provides a breakdown of our proposed fee.

If you have any questions or require additional information pertaining to the attached documents or the project in general, please do not hesitate to contact me.

Sincerely,

Douglas K Hammann:A01410D00000178224CBADF000034A7

Digitally signed by Douglas K Hammann:A01410D00000178224CBADF000034A7
Date: 2021.04.05 15:27:04 -04'00'

Douglas K. Hammann, P.E.

Encl.



*4700 RIVERSIDE DRIVE, SUITE 110*
*CORAL SPRINGS, FL 330367*
*954/510-4700*
*FAX 954/755-2741*

# ENGINEERING SCOPE REVISION

| | | | |
|---|---|---|---|
| **Project:** | Vacuum Pump Station No. 1 Improvements | **Client:** | Village of Palm Springs |
| **EEI Project No:** | 400-089.01 | **Contact:** | Paul Ward |
| **Revision No:** | 1 | **Date:** | April 5, 2021 |

**Nature of Revision:**

This Engineering Scope Revision covers work required to modify and prepare the drawings and specifications for rebid. Specifically, the following items shall be added:

1. Obtain sketch and description for easement necessary for generator footprint.
2. General project management and bidding coordination.
3. Specification revisions necessary for bid coordination and updating front-end documents.
4. Revise the Drawings to reflect updated bid numbers and dates.
5. Bidding services for attending meetings (pre-bid and bid opening), site visit (if necessary), answering bidder questions, bid evaluation, and recommendation of award.

**Scope of Services:**

1. Engineering services (Items 1 through 5 above) in accordance with the attached fee breakdown spreadsheet = **$3,257.00**

| **Original Engineering Design Fee:** | | **Original Time:** | |
|---|---|---|---|
| Task Order #240 – Safety Improvements | $29,282.00 | N/A | - |
| Task Order #266 – Emergency Generator | $24,685.00 | N/A | - |
| Task Order #278 – Vacuum Pump Replacement | $17,592.00 | N/A | - |
| Total | $71,559.00 | Total | 259 Days |
| **Previous Revisions:** | | **Previous Revisions:** | |
| Change Order #1 (TO #240) | $4,653.00 | Change Order #1 (TO #240) | 0 Days |
| Total | $4,653.00 | Total | 0 Days |
| **This Revision:** | $3,257.00 | **This Revision:** | 30 Days |
| **Revised Fee:** | $79,469.00 | **Revised Time:** | 289 Days |

**Approved by:**

Douglas K Hammann:A01410D00000178224CBADF000034A7

Digitally signed by Douglas K Hammann:A01410D0000017822 4CBADF000034A7
Date: 2021.04.05 15:27:39 -04'00'

Douglas K. Hammann, P.E.
Project Manager
Eckler Engineering, Inc.

**Accepted by:**

Paul Ward
Project Manager
Village of Palm Springs



*4700 RIVERSIDE DRIVE, SUITE 110*
*CORAL SPRINGS, FL 330367*
*954/510-4700*
*FAX 954/755-2741*

**Attachments:**

☒ Revision Fee Breakdown ☐ Other:

☒ Revised Schedule

Y:\Documents\Village\400-089.01 Vacuum Pump Station No.1 Improvements\Project Management\Engineering Scope Revisions\Engineering Scope Revision Number 1\TO#240, 266, 278 Engineering Scope Revision 1 (03_24_2021).docx



*4700 RIVERSIDE DRIVE, SUITE 110*
*CORAL SPRINGS, FL 330367*
*954/510-4700*
*FAX 954/755-2741*

# VILLAGE OF PALM SPRINGS

**VACUUM PUMP STATION NO. 1 IMPROVEMENTS**
**TASK ORDER NO. 266**
**ENGINEERING SCOPE REVISION NO. 1**

DATE: November 4, 2020

*I. LABOR*

| | TASK DESCRIPTION | PERSONNEL | | | | | | | | | | | |
|---|---|---|---|---|---|---|---|---|---|---|---|---|---|
| | | Principal | Engineer 8 | Engineer 5 | Engineer 4 | Engineer 3 | Engineer 2 | Technician 4 | Technician 3 | Technician 2 | Resident | Administrative | |
| 1 | Subconsultant coordination | | | | 2 | | | | | | | | $246.00 |
| 2 | General bid coordinaton and project management | | 1 | | 2 | | | | | | | | $426.00 |
| 3 | Specification revisions | | 1 | | 4 | | | | | | | | $672.00 |
| 4 | Drawing revisions | | 1 | | 2 | | | 2 | | | | | $668.00 |
| 5 | Bidding services (meetings, site visit, bidder questions, bid evaluation, recommendation of award) | | 1 | | 5 | | | | | | | | $795.00 |
| 6 | Not Used | | | | | | | | | | | | $0.00 |
| 7 | Not Used | | | | | | | | | | | | $0.00 |
| 8 | Not Used | | | | | | | | | | | | $0.00 |
| 9 | Not Used | | | | | | | | | | | | $0.00 |
| 10 | Not Used | | | | | | | | | | | | $0.00 |
| 11 | Not Used | | | | | | | | | | | | $0.00 |
| 12 | Not Used | | | | | | | | | | | | $0.00 |
| | Total Hours | 0 | 4 | 0 | 15 | 0 | 0 | 2 | 0 | 0 | 0 | 0 | |
| | Rate | $205.00 | $180.00 | $137.00 | $123.00 | $107.00 | $97.00 | $121.00 | $110.00 | $92.00 | $95.00 | $70.00 | |
| | Sub-Total Labor | $0.00 | $720.00 | $0.00 | $1,845.00 | $0.00 | $0.00 | $242.00 | $0.00 | $0.00 | $0.00 | $0.00 | |
| | | | | | | | | | **TOTAL LABOR** | | $2,807.00 | | $2,807.00 |

*II. REIMBURSABLE EXPENSES*

| EXPENSE ITEM | EXPENSE TYPE | UNIT | NO. OF UNITS | COST PER UNIT | TOTAL COST |
|---|---|---|---|---|---|
| | REPRODUCTION | | | | |
| | Half Size drawings (11"x17") | EA | 0 | $13.50 | $0.00 |
| 1 | Full Size drawings (22"x34") | EA | 0 | $31.32 | $0.00 |
| | Specification Booklets | EA | 0 | $3.00 | $0.00 |
| | Prepare CD's (Bid Documents) | EA | 0 | $10.00 | $0.00 |
| 2 | PHOTOCOPIES | EA | 0 | $0.20 | $0.00 |
| | PLOTTING | | | | |
| 3 | 22 X 34 (SET UP) | EA | 0 | $3.00 | $0.00 |
| | 11 X 17 (SET UP) | EA | 0 | $3.00 | $0.00 |
| | TRAVEL | | | | |
| 4 | MILEAGE | MILE | 0 | $0.585 | $0.00 |
| | TOLLS | EA | 0 | $3.30 | $0.00 |
| | SUBCONSULTANTS | | | | |
| | SURVEY (AVIROM) | LS | 1 | $450.00 | $450.00 |
| | ELECTRICAL (RC Engineering) | LS | 0 | $0.00 | $0.00 |
| 5 | STRUCTURAL (Sanders) | LS | 0 | $0.00 | $0.00 |
| | GEOTECHNICAL (Nutting) | LS | 0 | $0.00 | $0.00 |
| | SL Dobbs Engineering, LLC | LS | 0 | $0.00 | $0.00 |
| | GRANT FUNDING (Jones Edmunds) | LS | 0 | $0.00 | $0.00 |
| | | | | **TOTAL EXPENSES** | $450.00 |

| | |
|---|---|
| **GRAND TOTAL** | $3,257.00 |

**PROJECT SCHEDULE (REVISION 1)**
**VACUUM PUMP STATION NO. 1 IMPROVEMENTS**

**Village of Palm Springs**
**EEI Project Number: 400-089.01(Task Order # 240, 266 and 278)**

| ACTIVITY | STATUS | TIME (days) | ORIGINAL SCHEDULE Start | ORIGINAL SCHEDULE End | ACTUAL SCHEDULE Start | ACTUAL SCHEDULE End | FLOAT DAYS | COMMENTS |
|---|---|---|---|---|---|---|---|---|
| Authorization to proceed | Completed | 0 | 5-Mar-20 | 5-Mar-20 | 5-Mar-20 | 5-Mar-20 | 0 | Per PO 153-03 (FY2020) rec'd 3/4/2020 - |
| Preliminary Coordination Internally and with VILLAGE | Completed | 14 | 5-Mar-20 | 19-Mar-20 | 5-Mar-20 | 19-Mar-20 | 0 | |
| Project Site Assessment and Data gathering | Completed | 14 | 19-Mar-20 | 2-Apr-20 | 19-Mar-20 | 2-Apr-20 | 0 | |
| Submit plans and specs (90% Submittal) | Completed | 45 | 2-Apr-20 | 17-May-20 | 2-Apr-20 | 15-May-20 | 2 | |
| Receive VILLAGE review comments | Completed | 14 | 17-May-20 | 31-May-20 | 15-May-20 | 20-Jul-20 | -48 | Delay in receiving Village comments; received on 7/20/2020 |
| Submit plans and specs (100% Submittal) | Completed | 30 | 31-May-20 | 30-Jun-20 | 20-Jul-20 | 25-Aug-20 | -56 | Delay in submitting to Village; submitted on 8/25/2020 |
| Receive VILLAGE review comments | Completed | 14 | 30-Jun-20 | 14-Jul-20 | 25-Aug-20 | 1-Sep-20 | -49 | Received Village comments on 9/1/2020 |
| Submit FINAL documents with permit applications and final cost opinion (Final Submittal) | Completed | 14 | 14-Jul-20 | 28-Jul-20 | 1-Sep-20 | 11-Sep-20 | -45 | Submitted on 9/11/2020 |
| Receive Final VILLAGE Review Comments and Permit Application Signatures | Completed | 10 | 28-Jul-20 | 7-Aug-20 | 11-Sep-20 | 11-Nov-20 | -96 | Waiting on Village comments |
| Regulatory Permitting | Completed | 45 | 7-Aug-20 | 21-Sep-20 | 11-Nov-20 | 26-Dec-20 | -96 | PBC DERM for Generator fuel tank. To be completed after generator is installed. |
| Bidding Coordination with Village | Completed | 14 | 21-Sep-20 | 5-Oct-20 | 11-Nov-20 | 19-Nov-20 | -45 | Bid Advertisement 11/19/2020 |
| Bidding and Contract Award Phase | Completed | 45 | 5-Oct-20 | 19-Nov-20 | 19-Nov-20 | 28-Feb-21 | -101 | Bid Advertisement 11/19/20<br>Pre-Bid Conference 12/1/2020 at 2:00 PM |
| Rebidding and Contract Award Phase | Underway | 30 | 19-Nov-20 | 19-Dec-20 | 24-Mar-21 | 23-Apr-21 | -125 | Scope Revision #1 adds 30 days - dates may change depending on approval date of Scope Revision #1 |
| Construction (days to final completion) | Future | 240 | 19-Dec-20 | 16-Aug-21 | | | - | |
| Prepare record drawings and project closeout | Future | 30 | 16-Aug-21 | 15-Sep-21 | | | - | |

| | | |
|---|---|---|
| Design | = | 259 |
| Construction | = | 270 |
| Total | = | 529 |

**VILLAGE OF PALM SPRINGS**

**CONSULTING SERVICE WORK AUTHORIZATION**

DATE: August 30, 2019 VILLAGE RFQ. NO.: 2018R-002

WORK AUTHORIZATION NO. EE-UXX FOR CONSULTING SERVICES

TASK ORDER (PROJECT) No. 266 & 278 G/L CODE: 41336-56400

ECKLER ENGINEERING PROJECT NO.: 400-0XX.01

PROJECT TITLE: Vacuum Pump Station No. 1 Upgrades

This Work Authorization, when executed, shall be incorporated in and shall become an integral part of the Agreement for Professional Services dated September 13, 2018 between the Village of Palm Springs ("VILLAGE"), and Eckler Engineering, Inc. ("CONSULTANT") hereafter referred to as the Agreement.

## I. PROJECT DESCRIPTION

Vacuum Pump Station No. 1 was constructed in 1998. This original vacuum pump station has been serving the surrounding collection area for the past 21 years. In order to maintain this service capability, there are improvements needed at this facility. The following improvements will be addressed per this Work Authorization:

A. Removal and replacement of the existing vacuum pumps. The original vacuum pumps will be replaced with a newer type of vacuum pump that requires less maintenance, specifically routine oil changes.

B. Provision of a dedicated standby emergency generator. This generator shall serve all of the electrical power requirements of the vacuum pump station and will provide automatic transfer of power upon an outage.

C. Modifications to the requirements for personnel access and incorporation of those requirements into this project.

## II. SCOPE OF SERVICES

The following is a description of the services to be provided under this Work Authorization.

### A. DESIGN PHASE

The Design Phase will include the following services:

#### TASK D1 - PROJECT ADMINISTRATION/MANAGEMENT

This task focuses on the administration of the project including project setup, client interface and general project management and administration.

#### TASK D2 - DATA GATHERING AND PRELIMINARY COORDINATION

This task focuses on obtaining the necessary preliminary information required to prepare detailed engineering plans and specifications.

1. Visit the site and review pertinent features that may impact design and/or construction.

2. Collect existing facility's data including field conditions, access, and other information needed to complete the design.

3. Meet with appropriate VILLAGE staff to discuss the project requirements.

4. Coordination and completion of SUBCONSULTANT's professional services for electrical engineering.

#### TASK D3 - PRELIMINARY DESIGN REPORT

This task not required. The design conditions are currently known and defined.

#### TASK D4 - DRAWINGS AND ENGINEERING

This task consists of the engineering and the development of plans necessary to construct this project. The CONSULTANT will prepare detailed drawings for the proposed work as discussed in this task order. A tentative list of drawings to be prepared for this project is presented in ATTACHMENT 1.

#### TASK D5 - SPECIFICATION PREPARATION

1. Prepare Standard EJCDC (2013 Edition) Contract Forms, Bidding Documents and Contract Conditions required for this project.

2. Prepare technical specifications required for this project in Division 1 through Division 16. These specifications, utilizing the CSI format, will be

prepared and will consist of written technical descriptions of materials, equipment and construction systems, standards and workmanship required for this project as developed by CONSULTANT. A tentative list of specification sections to be prepared for this project is presented in ATTACHMENT 2.

**TASK D6 - PERMIT PREPARATION ASSISTANCE**

This task consists of the preparation of the following construction permit application submittals:

1. No regulatory wastewater permits are anticipated. Work required is maintenance per FAC 62-620.325(2)(e). Notification to the Department per Rule will be provided, if applicable.

2. Palm Beach County DERM Permit for proposed generator diesel base tank.

   Any additional permits required beyond the above will be considered as outside the scope of this proposal.

**TASK D7 - PREPARE OPINION(S) OF PROBABLE CONSTRUCTION COST**

Prepare the 90%, 100% and final completion level(s) opinion of probable construction cost for new facilities and improvements proposed under this project.

**TASK D8 - BIDDING ASSISTANCE SERVICES**

This task will include work necessary to assist the VILLAGE with the bidding of the project. This work may include the following:

1. Coordinate bidding requirements with VILLAGE and prepare electronic bid documents for distribution by the Village Clerk's office. Bidding documents shall be in .pdf format on CD or other requested media.

2. Assist VILLAGE Clerk's Office with the coordination of the bidding documents, the advertisement for bids, respond to communications from contractors, and prepare addenda information as required. The VILLAGE Clerk's Office shall publish/distribute all Addenda.

3. Attend the prebid meeting and prepare/distribute minutes to registered bidding contractors. VILLAGE Clerk's Office shall publish final Prebid Meeting Minutes.

4. Attend the bid opening and tabulate the bids provided by interested contractors.

## TASK D9 - BID EVALUATION AND RECOMMENDATION OF AWARD ASSISTANCE

This task shall consist of the review and evaluation of the bids and the recommendation of a bidder for award of a contract. A recommendation of award letter shall be prepared and submitted to VILLAGE.

## TASK D10 - SUBMIT AND REVIEW (QUALITY CONTROL)

The CONSULTANT will make the following submittals at various completion levels of this project for the purpose of VILLAGE's review and comment for coordination and quality control. A review meeting will be requested following each submittal to discuss and receive comments from the VILLAGE. The VILLAGE's comments shall be incorporated into revisions prior to the next subsequent quality control submittal. Quality control submittals for this project are anticipated at the following completion levels:

1. 90% Drawings and Specifications

2. 100% Drawings and Specifications

3. Final Drawings and Specifications

The CONSULTANT will incorporate the agreed-upon revisions made by the VILLAGE.

A total of three (3) meeting(s) with the VILLAGE is the level of effort for this Task.

# B. ENGINEERING SERVICES DURING CONSTRUCTION

## TASK C1 – PROJECT ADMINISTRATION/MANAGEMENT

This task focuses on the administration of the project including project setup, client interface and general project management and administration.

## TASK C2 - PRECONSTRUCTION ACTIVITIES PRIOR TO NOTICE TO PROCEED

After issuance of a Notice of Award by VILLAGE, assist in the preparation and signing of the Contract Documents. The CONSULTANT will also undertake other preconstruction activities which include coordinating, attending and preparing minutes of the preconstruction conference meeting and assisting the Contractor in finalizing the permits required for the construction of this project by providing the required number of signed/sealed drawing sets.

## TASK C3 - CONSULT AND ADVISE

Provide technical advice and assistance to VILLAGE during the construction period and provide necessary interpretations and clarifications of the Contract Documents as required by VILLAGE or Contractor by responding to RFI's or other documentation. An evaluation of and response to an estimated three (3) RFI's is the level of effort that is estimated for this task.

## TASK C4 - REVIEW SHOP DRAWINGS

Review Shop Drawings and samples, the results of tests and inspections, and other data submitted by the Contractor in accordance with the Contract Documents. A total of twenty (20) submittals is the estimated basis for this item's budget.

## *TASK C5 - REVIEW PAY REQUESTS AND SCHEDULES*

Review estimated four (4) monthly pay requests and make recommendations for payment to VILLAGE. Monthly pay requests will be reviewed in the field and an agreement reached between the Contractor, VILLAGE's project representative(s), and the CONSULTANT prior to formal submittal to VILLAGE for payment. Review the Contractor's preliminary and monthly progress schedules through completion.

## TASK C6 - PERFORM PERIODIC AND MILESTONE INSPECTIONS

CONSULTANT will make periodic site visits at intervals appropriate to the various stages of construction to observe the work, determine conformity with the plans and specifications, and compliance with the construction permits. It is anticipated that there will be a total of four (4) visits.

Perform inspections to determine that the project has achieved substantial completion and readiness for final acceptance and that the work has been completed in general conformance with the Contract Documents to certify completion of construction to permitting agencies, where applicable. Two (2) such site visits are anticipated.

## TASK C7 - PROGRESS MEETINGS

This task not required.

## TASK C8 - CONTRACT MODIFICATIONS

Develop the necessary data, notes and clarification drawings required to prepare contract modifications to reflect adjustments to the construction project. One (1)

contract modification incorporating a total of four (4) items, is the estimated basis for this budget item.

**TASK C9 - PROJECT CLOSEOUT**

Review the Contractor's record drawing information which shows the work as it was constructed. Prepare for VILLAGE record drawings and prints showing those changes made during the construction process based upon information provided by the Contractor as follows:

1. CONSULTANT shall prepare record drawings based on Contractor's field data.

2. CONSULTANT shall submit record documents to VILLAGE.

3. CONSULTANT shall attend the final project reconciliation meetings with VILLAGE and CONTRACTOR.

***TASK C10 - REGULATORY AGENCY DOCUMENTATION AND PROJECT CLOSEOUT SUBMITTALS***

Project services in connection with preparing acknowledgment of Final Completion construction submittals with record drawings to the following agencies.

1. Palm Beach County DERM Diesel Fuel Storage Permit.

**TASK C11 - SPECIAL SERVICES**

The CONSULTANT shall provide special services during construction consisting of the following items:

Resident Services

To monitor that project is constructed in complete conformance with the Contract Documents.

Services which will be provided by the CONSULTANT's resident project representative will consist of the following:

Make periodic on-site field observations of the Contractor's performance. The limits of the authority of the on-site representative are as defined within the Construction Contract Documents.

1. Observe any tests and review the results of tests required of the Contractor by the Contract Documents.

2. Observe the placement of reinforcing steel and all concrete pours. Observe the construction of all piping and equipment placement.

3. Assist with commissioning, startup and check out the operation of all new equipment and control systems.

4. Assist in the development of punch lists in conjunction with the milestone inspections to determine if the project has achieved Substantial and Final Completion and that the work has been completed in general conformance with the Contract Documents.

5. In order to estimate the efforts of the CONSULTANT's project representative, it is anticipated that a person would need to visit the project site ten (10) times, approximately 5 hours per visit.

## III. DELIVERABLES

Project deliverables shall be in accordance with Attachment 1.

## IV. SCHEDULE

Upon receipt of Notice-To-Proceed the CONSULTANT will complete the services identified in this Work Authorization within the schedule outlined in Attachment 3.

## V. COMPENSATION AND PAYMENT

The CONSULTANT will perform the tasks as outlined in the scope of services for the fees as outlined in Tables 1 and 2 and further detailed in Attachments 5 and 6.

### A. DESIGN PHASE

1. For services described in Part II. A. - Design Phase, Tasks D1 through D10, the lump sum fee of **$34,092.00**.

**TABLE 1**
**DESIGN PHASE**
**BUDGET SUMMARY**

| Description | Total |
|---|---|
| D1 - Project Administration / Management | $4,500.00 |
| D2 - Data Gathering and Preliminary Coordination | $1,000.00 |
| D3 - Not Used | $0.00 |
| D4 - Drawings and Engineering | $20,387.00 |
| D5 - Specification Preparation | $1,280.00 |
| D6 - Permitting | $0.00 |
| D7 - Prepare Opinions of Probable Construction Cost | $321.00 |
| D8 - Bidding Assistance Services | $1,470.00 |
| D9 - Bid Evaluation and Recommendation of Award | $864.00 |
| D10 - Submit and Review (Quality Control) | $1,830.00 |
| Reimbursable Expenses | $1,084.00 |
| **TOTAL LUMP SUM FEE** | **$34,092.00** |

**B. CONSTRUCTION PHASE**

1. For services described in Part II. B. - Construction Phase, Tasks C1 through C11, not to exceed fee of **$26,685.00.**

**TABLE 2**
**ENGINEERING SERVICES DURING CONSTRUCTION**
**BUDGET SUMMARY**

| Description | Total |
|---|---|
| C-1 Project Administration / Management | $2,880.00 |
| C-2 Preconstruction Activities Prior to Notice to Proceed | $1,896.00 |
| C-3 Consult and Advise | $1,935.00 |
| C-4 Review Shop Drawings | $7,420.00 |
| C-5 Review Pay Requests & Schedules | $1,304.00 |
| C-6 Perform Periodic & Milestone Inspections | $2,424.00 |
| C-7 Not Used | $0.00 |
| C-8 Contract Modifications | $786.00 |
| C-9 Project Closeout | $2,364.00 |
| C-10 Not Used | $0.00 |
| C-11 Special Services | $5,100.00 |
| Reimbursable Expenses | $576.00 |
| **TOTAL NOT-TO-EXCEED FEE** | **$26,685.00** |

**TABLE 3**
**PROJECT COMPONENT**
**BUDGET SUMMARY**

| Project Component | Design Phase | Engineering SDC | Total |
|---|---|---|---|
| Vacuum Pumps Replacement (2) | $11,592.00 | $6,000.00 | $17,592.00 |
| Emergency Generator Addition | $15,000.00 | $9,685.00 | $24,685.00 |
| Building Access Modifications | $7,500.00 | $11,000.00 | $18,500.00 |
| **Project Total** | **$34,092.00** | **$26,685.00** | **$60,777.00** |

## VI. ASSUMPTIONS

This Work Authorization does not include the provision of the following items:

A. Payment of permit fees.

B. Any expert witness or testimony services.

C. Services not specifically indicated in this Work Authorization.

This Work Authorization assumes the following data or assistance will be provided by VILLAGE:

A. Attendance at project meetings.

B. General project review, where required.

C. Provide pertinent project data and information available from VILLAGE when requested by CONSULTANT.

D. Facility access and other project related information requested by CONSULTANT.

E. VILLAGE Project Representative Services (Part time when CONSULTANT's representative is not on site.)

Provide editable files (Word format) of VILLAGE's EJCDC based (2013 Edition) Contract forms. If unavailable, CONSULTANT shall use documents from recent VILLAGE projects.

Services which will be provided by the VILLAGE resident project representative will include the following:

1. Monitor that project is constructed in conformance with the Contract Documents.

2. Make periodic on-site field observations of the Contractor's performance. The limits of the authority of the on-site representative are as defined within the Contract Documents.

3. Observe field tests and review the results of tests required by the Contract Documents.

4. Assist in the development of punch lists in conjunction with the milestone inspections to determine if the project has achieved Substantial and Final Completion and that the work has been completed in general conformance with the Contract Documents.

5. Provide daily reports of Contractor activity to the CONSULTANT on a form provided by the CONSULTANT.

6. Provide photographs of the work during construction showing typical construction progress.

7. Keep the CONSULTANT informed of any changes which need to be made and assist CONSULTANT with the change decision.

8. Be present at all required times for permit compliance.

## VII. AGREEMENT REFERENCE

The work authorized under this Work Authorization shall be performed under the terms and conditions described within the Professional Services Agreement dated September 13, 2018, by and between the Village of Palm Springs ("VILLAGE") and Eckler Engineering, Inc. ("CONSULTANT"). Compensation shall not exceed the hourly rates currently in effect under this Agreement.

**ECKLER ENGINEERING, INC.**

By: _____

Print Name: Douglas K. Hammann, P.E.

Title: President

**VILLAGE OF PALM SPRINGS**

By: _____

Date: February 13, 2020

Village Attorney's Office

Approved as to form and legality

By: _____

(Required if over $25,000)

**VILLAGE OF PALM SPRINGS**

**CONSULTING SERVICE WORK AUTHORIZATION**

DATE: October 30, 2018 VILLAGE RFQ. NO.: 2018R-002

WORK AUTHORIZATION NO. EE-U01 FOR CONSULTING SERVICES

TASK ORDER (PROJECT) No. 240 G/L CODE: 41336-56200

ECKLER ENGINEERING PROJECT NO.: 400-081.01

PROJECT TITLE: Personnel Access Revision Vacuum Station No. 1 (Marilyn Drive)

This Work Authorization, when executed, shall be incorporated in and shall become an integral part of the Agreement for Professional Services dated September 13, 2018 between the Village of Palm Springs ("VILLAGE"), and Eckler Engineering, Inc. ("CONSULTANT") hereafter referred to as the Agreement.

## I. PROJECT DESCRIPTION

Access at this site needs to be improved so that maintenance personnel can approach and enter this facility through a typical access doorway similar to the Village=s other vacuum pump stations. Access will also have to address the potential for removal of heavy pieces equipment such as pumps, motors, and/or valves from the vacuum pump station. Improvement space can be made available within the utility easement on the west side of the existing vacuum pump station structure. This space can be utilized, but will require minor relocation of existing 8-inch vacuum sanitary sewer line (VSS) and conflict resolution with the existing 6-inch force main. Based on these requirements, the following scope of work is proposed:

1. Relocation of the existing utility pipeline(s) to allow space for the access improvements.

2. Removal of existing ladders from the interior and exterior of existing vacuum pump station structure. Existing hatch on the roof of the structure shall remain for equipment access and removal by way of crane and/or boom truck.

3. Design of a new entrance, from grade, on the west side of the vacuum pump station structure.

4. Design of new flood resistant, 3' x 6' 8" door at west wall of structure.

5. Miscellaneous minor modifications to electrical and piping system on interior of building to facilitate space for access modifications.

## II. SCOPE OF SERVICES

The following is a description of the services to be provided under this Work Authorization.

### A. DESIGN PHASE

The Design Phase will include the following services:

#### TASK D1 - PROJECT ADMINISTRATION/MANAGEMENT

This task focuses on the administration of the project including project setup, client interface and general project management and administration.

#### TASK D2 - DATA GATHERING AND PRELIMINARY COORDINATION

This task focuses on obtaining the necessary preliminary information required to prepare detailed engineering plans and specifications.

1. Visit the site and review pertinent features that may impact design and/or construction.

2. Collect existing facility's data including field conditions, access, and other information needed to complete the design.

3. Meet with appropriate VILLAGE staff to discuss the project requirements.

#### TASK D3 - PRELIMINARY DESIGN REPORT

This task not required. The design conditions are currently known and defined.

#### TASK D4 - DRAWINGS AND ENGINEERING

This task consists of the engineering and the development of plans necessary to construct this project. The CONSULTANT will prepare detailed drawings for the proposed work as discussed in this task order. A tentative list of drawings to be prepared for this project is presented in ATTACHMENT 1.

## TASK D5 - SPECIFICATION PREPARATION

1. Prepare Standard EJCDC (2013 Edition) Contract Forms, Bidding Documents and Contract Conditions required for this project.

2. Prepare technical specifications required for this project in Division 1 through Division 16. These specifications, utilizing the CSI format, will be prepared and will consist of written technical descriptions of materials, equipment and construction systems, standards and workmanship required for this project as developed by CONSULTANT. A tentative list of specification sections to be prepared for this project is presented in ATTACHMENT 2.

## TASK D6 - PERMIT PREPARATION ASSISTANCE

This task consists of the preparation of the following construction permit application submittals:

1. No regulatory permits are anticipated. Work required is maintenance per FAC 62-620.325(2)(e). Notification to the Department per Rule will be provided, if applicable.

   Any additional permits required beyond the above will be considered as outside the scope of this proposal.

## TASK D7 - PREPARE OPINION(S) OF PROBABLE CONSTRUCTION COST

Prepare the 90%, 100% and final completion level(s) opinion of probable construction cost for new facilities and improvements proposed under this project.

## TASK D8 - BIDDING ASSISTANCE SERVICES

This task will include work necessary to assist the VILLAGE with the bidding of the project. This work may include the following:

1. Coordinate bidding requirements with VILLAGE and prepare electronic bid documents for distribution by the Village Clerk's office. Bidding documents shall be in .pdf format on CD.

2. Assist VILLAGE Clerk's Office with the coordination of the bidding documents, the advertisement for bids, respond to communications from contractors, and issuance of addenda information as required.

3. Attend the prebid meeting and prepare/distribute minutes to registered bidding contractors. VILLAGE Clerk's Office shall publish final Prebid Meeting Minutes.

4. Attend the bid opening and tabulate the bids provided by interested contractors.

**TASK D9 - BID EVALUATION AND RECOMMENDATION OF AWARD ASSISTANCE**

This task shall consist of the review and evaluation of the bids and the recommendation of a bidder for award of a contract. A recommendation of award letter shall be prepared and submitted to VILLAGE.

**TASK D10 - SUBMIT AND REVIEW (QUALITY CONTROL)**

The CONSULTANT will make the following submittals at various completion levels of this project for the purpose of VILLAGE's review and comment for coordination and quality control. A review meeting will be requested following each submittal to discuss and receive comments from the VILLAGE. The VILLAGE's comments shall be incorporated into revisions prior to the next subsequent quality control submittal. Quality control submittals for this project are anticipated at the following completion levels:

1. 90% Drawings and Specifications

2. 100% Drawings and Specifications

3. Final Drawings and Specifications

The CONSULTANT will incorporate the agreed-upon revisions made by the VILLAGE.

A total of three (3) meeting(s) with the VILLAGE is the level of effort for this Task.

**B. ENGINEERING SERVICES DURING CONSTRUCTION**

**TASK C1 – PROJECT ADMINISTRATION/MANAGEMENT**

This task focuses on the administration of the project including project setup, client interface and general project management and administration.

## TASK C2 - PRECONSTRUCTION ACTIVITIES PRIOR TO NOTICE TO PROCEED

After issuance of a Notice of Award by VILLAGE, assist in the preparation and signing of the Contract Documents. The CONSULTANT will also undertake other preconstruction activities which include coordinating, attending and preparing minutes of the preconstruction conference meeting and assisting the Contractor in finalizing the permits required for the construction of this project by providing the required number of signed/sealed drawing sets.

## TASK C3 - CONSULT AND ADVISE

Provide technical advice and assistance to VILLAGE during the construction period and provide necessary interpretations and clarifications of the Contract Documents as required by VILLAGE or Contractor by responding to RFI's or other documentation.

## TASK C4 - REVIEW SHOP DRAWINGS

Review Shop Drawings and samples, the results of tests and inspections, and other data submitted by the Contractor in accordance with the Contract Documents. A total of ten (10) submittals is the estimated basis for this item's budget.

## *TASK C5 - REVIEW PAY REQUESTS AND SCHEDULES*

Review estimated two (2) monthly pay requests and make recommendations for payment to VILLAGE. Monthly pay requests will be reviewed in the field and an agreement reached between the Contractor, VILLAGE's project representative(s), and the CONSULTANT prior to formal submittal to VILLAGE for payment. Review the Contractor's preliminary and monthly progress schedules through completion.

## TASK C6 - PERFORM PERIODIC AND MILESTONE INSPECTIONS

CONSULTANT will make periodic site visits at intervals appropriate to the various stages of construction to observe the work, determine conformity with the plans and specifications, and compliance with the construction permits. It is anticipated that there will be a total of four (4) visits.

Perform inspections to determine that the project has achieved substantial completion and readiness for final acceptance and that the work has been completed in general conformance with the Contract Documents to certify completion of construction to permitting agencies, where applicable. Two (2) such site visits are anticipated.

### TASK C7 - PROGRESS MEETINGS

This task not required.

### TASK C8 - CONTRACT MODIFICATIONS

Develop the necessary data, notes and clarification drawings required to prepare contract modifications to reflect adjustments to the construction project. One (1) contract modification incorporating a total of four (4) items, is the estimated basis for this budget item.

### TASK C9 - PROJECT CLOSEOUT

Review the Contractor's record drawing information which shows the work as it was constructed. Prepare for VILLAGE record drawings and prints showing those changes made during the construction process based upon information provided by the Contractor as follows:

1. CONSULTANT shall prepare record drawings based on Contractor's field data.

2. CONSULTANT shall submit record documents to VILLAGE.

3. CONSULTANT shall attend the final project reconciliation meetings with VILLAGE and CONTRACTOR.

### *TASK C10 - REGULATORY AGENCY DOCUMENTATION AND PROJECT CLOSEOUT SUBMITTALS*

Project services in connection with preparing acknowledgment of Final Completion construction submittals with record drawings to the following agencies.

1. None Required

### TASK C11 - SPECIAL SERVICES

This Task not required.

## III. DELIVERABLES

Project deliverables shall be in accordance with Attachment 1.

## IV. SCHEDULE

Upon receipt of Notice-To-Proceed the CONSULTANT will complete the services identified in this Work Authorization within the schedule outlined in Attachment 3.

## V. COMPENSATION AND PAYMENT

The CONSULTANT will perform the tasks as outlined in the scope of services for the fees as outlined in Tables 1 and 2 and further detailed in Attachments 5 and 6.

### A. DESIGN PHASE

1. For services described in Part II. A. - Design Phase, Tasks D1 through D10, the lump sum fee of **$15,435.00**.

**TABLE 1**
**DESIGN PHASE**
**BUDGET SUMMARY**

| Description | Total |
|---|---|
| D1 - Project Administration / Management | $2,500.00 |
| D2 - Data Gathering and Preliminary Coordination | $1,000.00 |
| D3 - Not Used | $0.00 |
| D4 - Drawings and Engineering | $5,440.00 |
| D5 - Specification Preparation | $1,070.00 |
| D6 - Not Used | $0.00 |
| D7 - Prepare Opinions of Probable Construction Cost | $321.00 |
| D8 - Bidding Assistance Services | $1,470.00 |
| D9 - Bid Evaluation and Recommendation of Award | $864.00 |
| D10 - Submit and Review (Quality Control) | $1,830.00 |
| Reimbursable Expenses | $940.00 |
| **TOTAL LUMP SUM FEE** | **$15,435.00** |

### B. CONSTRUCTION PHASE

1. For services described in Part II. B. - Construction Phase, Tasks C1 through C11, not to exceed fee of **$13,847.00.**

**TABLE 2**
**ENGINEERING SERVICES DURING CONSTRUCTION**
**BUDGET SUMMARY**

| Description | Total |
|---|---|
| C-1 Project Administration / Management | $1,280.00 |
| C-2 Preconstruction Activities Prior to Notice to Proceed | $1,896.00 |
| C-3 Consult and Advise | $1,935.00 |
| C-4 Review Shop Drawings | $2,480.00 |
| C-5 Review Pay Requests & Schedules | $652.00 |
| C-6 Perform Periodic & Milestone Inspections | $2,424.00 |
| C-7 Not Used | $0.00 |
| C-8 Contract Modifications | $786.00 |
| C-9 Project Closeout | $2,034.00 |
| C-10 Not Used | $0.00 |
| C-11 Not Used | $0.00 |
| Reimbursable Expenses | $360.00 |
| **TOTAL NOT-TO-EXCEED FEE** | **13,847.00** |

## VI. ASSUMPTIONS

This Work Authorization does not include the provision of the following items:

A. Payment of permit fees.

B. Any expert witness or testimony services.

C. Services not specifically indicated in this Work Authorization.

This Work Authorization assumes the following data or assistance will be provided by VILLAGE:

A. Attendance at project meetings.

B. General project review, where required.

C. Provide pertinent project data and information available from VILLAGE when requested by CONSULTANT.

D. Facility access and other project related information requested by CONSULTANT.

E. VILLAGE Project Representative Services (Part time when CONSULTANT's representative is not on site.)

E. VILLAGE Project Representative Services (Part time when CONSULTANT's representative is not on site.)

F. Provide editable files (Word format) of VILLAGE's EJCDC based (2013 Edition) Contract forms. If unavailable, CONSULTANT shall use documents from recent VILLAGE projects.

Services which will be provided by the VILLAGE resident project representative will include the following:

1. Monitor that project is constructed in conformance with the Contract Documents.

2. Make periodic on-site field observations of the Contractor's performance. The limits of the authority of the on-site representative are as defined within the Contract Documents.

3. Observe field tests and review the results of tests required by the Contract Documents.

4. Assist in the development of punch lists in conjunction with the milestone inspections to determine if the project has achieved Substantial and Final Completion and that the work has been completed in general conformance with the Contract Documents.

5. Provide daily reports of Contractor activity to the CONSULTANT on a form provided by the CONSULTANT.

6. Provide photographs of the work during construction showing typical construction progress.

7. Keep the CONSULTANT informed of any changes which need to be made and assist CONSULTANT with the change decision.

8. Be present at all required times for permit compliance.

## VII. AGREEMENT REFERENCE

The work authorized under this Work Authorization shall be performed under the terms and conditions described within the Professional Services Agreement dated September 13, 2018, by and between the Village of Palm Springs ("VILLAGE") and Eckler Engineering, Inc. ("CONSULTANT"). Compensation shall not exceed the hourly rates currently in effect under this Agreement.

**ECKLER ENGINEERING, INC.**

By: _____

Print Name: Douglas K. Hammann, P.E.

Title: President

**VILLAGE OF PALM SPRINGS**

By: _____

Mayor Bev Smith

Date: November 8, 2018

Village Attorney's Office

Approved as to form and legality

By: _____

(Required if over $25,000)

## ATTACHMENT 1

## WORK AUTHORIZATION NUMBER EE-U01
## PERSONNEL ACCESS REVISION
## VACUUM PUMP STATION NO. 1 ( MARILYN DRIVE)
## TENTATIVE LIST OF DRAWINGS

### I. R. L. PRATT WTP

| Drawing Sheet No. | Title |
|---|---|
| **General** | |
| | Cover sheet |
| G-1 | Project Location Map & Index to Drawings |
| G-2 | General Notes and Abbreviations |
| G-3 | Mechanical Legends and Symbols |
| G-4 | Architectural and HVAC Legends |
| G-5 | Design Criteria |
| G-6 | Specifications |
| G-7 | Specifications |
| **Civil** | |
| C-1 | Civil Site Plan and Existing Piping Relocation Details |
| C-2 | Vacuum Station No. 1 Partial Demolition Plan and Details |
| C-3 | Site Restoration Plan |
| CD-01 | Standard Details - Civil |
| **Architectural** | |
| A-1 | Vacuum Station No. 1 Building Floor Plan and Elevations |
| A-2 | Finish Schedules |
| A-3 | Door and Hardware Schedules |
| AD-1 | Standard Details – Architectural |
| **Structural** | |
| S-1 | Vacuum Station No. 1 Building Floor Plans and Sections |
| S-2 | Miscellaneous Structural Details |
| SD-1 | Standard Details – Structural |

**Electrical**

| | |
|---|---|
| E-1 | Electrical Notes and Legends |
| E-2 | Vacuum Station No. 1 Electrical Modifications Plan |
| ED-1 | Standard Details – Electrical |

(Remainder of page left blank intentionally.)

## ATTACHMENT 2

## WORK AUTHORIZATION NUMBER EE-U01
## PERSONNEL ACCESS REVISION
## VACUUM PUMP STATION NO. 1 ( MARILYN DRIVE)

## TENTATIVE LIST OF SPECIFICATIONS

| SECTION NO. | TITLE |
|---|---|
| **PART 1** | **BIDDING REQUIREMENTS** |
| 00030 | Invitation to Bid |
| 00100 | Instructions to Bidders |
| 00300 | Bid Submission Checklist |
| 00310 | Bid Form |
| 00315 | Bidder's Qualification Questionnaire |
| 00320 | Electronic File(s) Disclaimer |
| 00410 | Bid Bond |
| 00415 | Public Entity Crimes |
| 00420 | Drug-Free Workplace |
| 00425 | Non-Collusive Affidavit |
| **PART 2** | **CONTRACT FORMS** |
| 00500 | Agreement |
| 00610 | Performance Bond |
| 00620 | Payment Bond |
| **PART 3** | **CONTRACT CONDITIONS** |
| 00705 | General Conditions |
| 00815 | Supplementary Conditions |
| **PART 4** | **SPECIFICATIONS** |

Technical Specifications will be included in Drawing Set.

(Remainder of page left blank intentionally.)

## ATTACHMENT 3

## WORK AUTHORIZATION NUMBER EE-U01
## PERSONNEL ACCESS REVISION
## VACUUM PUMP STATION NO. 1 ( MARILYN DRIVE)
## PRELIMINARY PROJECT SCHEDULE

| Activity | Duration (Days) | Cumulative Time (Days) |
|---|---|---|
| Authorization to Proceed | 0 | 0 |
| Preliminary Coordination internally and with VILLAGE | 7 | 7 |
| Project Site Assessment and Data Gathering | 7 | 14 |
| Submit Plans and Specifications (90%) | 21 | 35 |
| Receive VILLAGE Review Comments* | 14 | 49 |
| Submit Plans and Specifications (100%) | 14 | 63 |
| Receive VILLAGE Review Comments* | 14 | 77 |
| Submit Plans and Specifications (Final Submittal) with Permit Applications as applicable | 7 | 84 |
| Receive Final VILLAGE Review Comments and Permit* Application Signatures | 14 | 98 |
| Regulatory Permitting | N/A | - |
| Bidding Coordination with VILLAGE* | 7 | 105 |
| Bidding and Contract Award Phase* | 45 | 150 |
| Construction (Final Completion) | 90 | 240 |
| Project Closeout | 30 | 270 |

* The schedule is based upon conducting a review meeting within X calendar days after the Village receives the design submittal. All review comments shall be provided to Consultant within X calendar days after the Village receives the submittal. An adjustment to the overall schedule will be required in the event the review meeting takes longer to be conducted and/or obtaining comments takes longer to receive.

Detailed schedule will be provided upon receipt of authorization to proceed and will include specific submittal dated.

## ATTACHMENT 4

## WORK AUTHORIZATION NUMBER U01
## PERSONNEL ACCESS REVISION
## VACUUM PUMP STATION NO. 1 ( MARILYN DRIVE)

## LIST OF PROJECT DELIVERABLES

**DESIGN PHASE**

A. 90% Design Submittal

1. One (1) set of 11" x 17" Drawings, 90% complete.
2. 90% Completion Estimate of Probable Construction Cost.

B. 100% Design Submittal

1. One (1) set of 11" x 17" Drawings, 100% complete.
2. 100% Completion Estimate of Probable Construction Cost.

C. Final Design Submittal

1. One (1) set of 11" x 17" Drawings, 100% complete.
2. Final Completion Estimate of Probable Construction Cost.

D. Bidding (Final) Coordination Submittal

1. One (1) set of 11" x 17" Drawings (Final).
2. One (1) Final Completion Estimate of Probable Construction Cost.
3. Four (4) CD's with bid documents in .pdf format.

**BIDDING SERVICES**

A. Pre-Bid

1. Pre-bid Meeting Minutes Information.
2. Addenda Information, as required, to the VILLAGE and/or Contractors.

B. Post Bid

1. Bid Tabulation.

2. Recommendation of Award Letter.

3. Contractor Notice of Tentative Award.

**CONSTRUCTION PHASE**

A. Pre-Construction

1. Three (3) sets of 22" x 34" signed/sealed drawings and specifications for Building Permit Submittal.

2. Three (3) sets of drawings (11" x 17") and specifications for VILLAGE's use during construction.

3. Three (3) sets of drawings (11" x 17") and specifications for CONTRACTOR's use during construction.

4. Pre-construction conference meeting agenda and minutes.

B. Shop Drawings

1. Electronic copies of accepted and final shop drawings.

C. Construction Inspection

1. Site visit reports will be provided for each site visit in accordance with Task(s) C6.

D. Progress Meetings

1. N/A

E. Contract Modifications

1. Four (4) copies of all completed contract modifications.

F. Pay Requests

1. Copies of reviewed and approved partial and final pay request applications.

G. Record Drawings and Project Closeout

1. Two (2) sets of record drawings.

2. Two (2) CD's with record drawings in .pdf and ACAD (2016 Civil 3D) formats.

H. Commissioning and Startup Reports.

1. N/A

(Remainder of page left blank intentionally.)

# VILLAGE OF PALM SPRINGS

**PERSONNEL ACCESS REVISION VACUUM STATION NO.1 (MARILYN DRIVE)**
**WORK AUTHORIZATION NO. EE-U01**
**ATTACHMENT 5**

DATE: October 30, 2018

*I. DESIGN PHASE*

| | TASK DESCRIPTION | PERSONNEL | | | | | | | | | | | |
|---|---|---|---|---|---|---|---|---|---|---|---|---|---|
| | | Principal | Engineer 8 | Engineer 5 | Engineer 4 | Engineer 3 | Engineer 1 | Technician 4 | Technician 3 | Technician 2 | Resident | Administrative | |
| D1 | Project Administration / Management | 0 | 10 | | | | | | | | | 10 | $2,500.00 |
| D2 | Data Gathering and Preliminary Coordination | | 4 | | | | | | | | | 4 | $1,000.00 |
| D3 | Not Used | | | | | | | | | | | | $0.00 |
| D4 | Drawings and Engineering | | 5 | | | 0 | | | 40 | 0 | | 2 | $5,440.00 |
| D5 | Specification Preparartion | | 4 | | | 0 | | | | | | 5 | $1,070.00 |
| D6 | Not Used | | | | | | | | | | | | |
| D7 | Prepare Opinions of Probable Construction Cost | | 0 | | | 3 | | | | | | | $321.00 |
| D8 | Bidding Assistance Services | | 7 | | | | | | | | | 3 | $1,470.00 |
| D9 | Bid Evaluation and Recommendation of Award | | 2 | | | | 4 | | | | | 2 | $864.00 |
| D10 | Submit and Review (Quality Control) | | 9 | | | 0 | | | | | | 3 | $1,830.00 |
| D11 | Not Used | | | | | | | | | | | | $0.00 |
| D12 | Not Used | | | | | | | | | | | | $0.00 |
| | Total Hours | 0 | 41 | 0 | 0 | 3 | 4 | 0 | 40 | 0 | 0 | 29 | |
| | Rate | $205.00 | $180.00 | $137.00 | $123.00 | $107.00 | $91.00 | $121.00 | $110.00 | $92.00 | $95.00 | $70.00 | |
| | Sub-Total Labor | $0.00 | $7,380.00 | $0.00 | $0.00 | $321.00 | $364.00 | $0.00 | $4,400.00 | $0.00 | $0.00 | $2,030.00 | |
| | | TOTAL DESIGN PHASE LABOR | | | | | | | | | | $14,495.00 | $14,495.00 |

*II. REIMBURSABLE EXPENSES DESIGN PHASE*

| EXPENSE ITEM | EXPENSE TYPE | UNIT | NO. OF UNITS | COST PER UNIT | TOTAL COST |
|---|---|---|---|---|---|
| 1 | REPRODUCTION | | | | |
| | Half Size drawings (11"x17") | EA | 0 | $10.00 | $0.00 |
| | Full Size drawings (22"x34") | EA | 0 | $23.20 | $0.00 |
| | Specification Booklets | EA | 0 | $10.00 | $0.00 |
| | Prepare CD's (Bid Documents) | EA | 0 | $10.00 | $0.00 |
| 2 | PHOTOCOPIES | EA | 0 | $0.20 | $0.00 |
| 3 | PLOTTING | | | | |
| | 22 X 34 (SET UP) | EA | 20 | $3.00 | $60.00 |
| | 11 X 17 (SET UP) | EA | 60 | $3.00 | $180.00 |
| 4 | TRAVEL | | | | |
| | MILEAGE | MILE | 0 | $0.545 | $0.00 |
| | TOLLS | EA | 0 | $3.30 | $0.00 |
| 5 | SUBCONSULTANTS | | | | |
| | SURVEY | LS | 0 | $0.00 | $0.00 |
| | ELECTRICAL | LS | 0 | $0.00 | $0.00 |
| | STRUCTURAL | LS | 1 | $700.00 | $700.00 |
| | GEOTECHNICAL | LS | 0 | $0.00 | $0.00 |
| | HYDROGEOLOGIC | LS | 0 | $0.00 | $0.00 |
| | PERMIT FEES | LS | 0 | $0.00 | $0.00 |
| | SOFT DIGS | LS | 0 | $0.00 | $0.00 |
| | | | | TOTAL DESIGN PHASE EXPENSES | $940.00 |

| | |
|---|---|
| GRAND TOTAL | $15,435.00 |
| USE | $15,435.00 |

# VILLAGE OF PALM SPRINGS

**PERSONNEL ACCESS REVISION VACUUM STATION NO.1 (MARILYN DRIVE)**
**WORK AUTHORIZATION NO. EE-U01**
**ATTACHMENT 6**

*I. ENGINEERING SERVICES DURING CONSTRUCTION*

*DATE:* October 30, 2018

| | TASK DESCRIPTION | PERSONNEL | | | | | | | | | | |
|---|---|---|---|---|---|---|---|---|---|---|---|---|
| | | Principal | Engineer 8 | Engineer 5 | Engineer 4 | Engineer 3 | Engineer 1 | Technician 4 | Technician 3 | Technician 2 | Resident | Administrative | |
| C1 | Project Administration/Management | | 4 | | | | | | | | | 8 | $1,280.00 |
| C2 | Preconstruction Activities Prior to Notice to Proceed | | 6 | | 4 | | | | | 2 | | 2 | $1,896.00 |
| C3 | Consult and Advise | | 3 | | 6 | | | | | 6 | | 1.5 | $1,935.00 |
| C4 | Review Shop Drawings | | 5 | | 10 | | | | | | | 5 | $2,480.00 |
| C5 | Review Pay Requests and Schedules | | 0.5 | | 4 | | | | | | | 1 | $652.00 |
| C6 | Perform Periodic and Milestone Inspections | | 0 | | 18 | | | | | | | 3 | $2,424.00 |
| C7 | Not Used | | 0 | | 0 | | | | | | | 0 | $0.00 |
| C8 | Contract Modifications | | 1 | | 2 | | | | 2 | | | 2 | $786.00 |
| C9 | Project Closeout | | 2 | | 8 | | | | 5 | | | 2 | $2,034.00 |
| C10 | Not Used | | | | | | | | | | | | $0.00 |
| C11 | Not Used | | | | | | | | | | 0 | 0 | $0.00 |
| C12 | Not Used | | | | | | | | | | | | $0.00 |
| | Total Hours | 0 | 21.5 | 0 | 52 | 0 | 0 | 0 | 7 | 8 | 0 | 24.5 | |
| | Rate | $205.00 | $180.00 | $137.00 | $123.00 | $107.00 | $91.00 | $121.00 | $110.00 | $92.00 | $95.00 | $70.00 | |
| | Sub-Total Labor | $0.00 | $3,870.00 | $0.00 | $6,396.00 | $0.00 | $0.00 | $0.00 | $770.00 | $736.00 | $0.00 | $1,715.00 | |
| | | | | | | | | | | TOTAL LABOR | | $13,487.00 | $13,487.00 |

*II. REIMBURSABLE EXPENSES*

| EXPENSE ITEM | EXPENSE TYPE | UNIT | No. OF UNITS | COST PER UNIT | TOTAL COST |
|---|---|---|---|---|---|
| 1 | REPRODUCTION | | | | |
| | Half Size Drawings (11" x 17") | EA | 0 | $10.00 | $0.00 |
| | Full Size Drawings (22" x 34") | EA | 0 | $23.20 | $0.00 |
| | Specification Booklets | EA | 0 | $10.00 | $0.00 |
| | Record Document CD's | EA | 0 | $10.00 | $0.00 |
| 2 | PHOTOCOPIES | EA | 0 | $0.25 | $0.00 |
| 3 | PLOTTING | | | | |
| | 22 X 34 (SET UP ) | EA | 20 | $15.00 | $300.00 |
| | 11 X 17 (SET UP) | EA | 20 | $3.00 | $60.00 |
| 4 | TRAVEL | | | | |
| | MILEAGE | MILE | 0 | $0.545 | $0.00 |
| | TOLLS | EA | 0 | $3.30 | $0.00 |
| 5 | SUBCONSULTANTS | | | | |
| | SURVEY | LS | 0 | $0.00 | $0.00 |
| | ELECTRICAL | LS | 0 | $0.00 | $0.00 |
| | STRUCTURAL | LS | 0 | $0.00 | $0.00 |
| | GEOTECHNICAL | LS | 0 | $0.00 | $0.00 |
| | ARCHITECTURAL | LS | 0 | $0.00 | $0.00 |
| | HVAC | LS | 0 | $0.00 | $0.00 |
| | | | | TOTAL EXPENSES | $360.00 |

| | |
|---|---|
| **GRAND TOTAL** | $13,847.00 |
| **USE** | $13,847.00 |

# Village of Palm Springs

# Executive Brief

**AGENDA DATE:** May 13, 2021

**DEPARTMENT:** Public Service

---

**ITEM 6.11:** Approve Change Order No. 1 (Task Order No. 271 - Work Authorization EE-U08) - Professional Engineering Services - Replacement of Sand Loader System Project - Public Service Department (FY 2021 Budget Funded - Water & Sewer Enterprise Fund) - Eckler Engineering, Inc.

**SUMMARY:** On December 12, 2019, the Village Council approved Task Order #271 (Work Authorization EE-U08) with Eckler Engineering, Inc. for professional engineering services associated with the design and construction of the Sand Loader Replacement Project (Task Order No. 271) at the Main Water Treatment Plant in the amount of $35,759.

Currently, the Public Service Department is requesting approval of Change Order #2 to Task Order No. 271 (Work Authorization EE-U08) for Eckler Engineering to provide additional engineering and design services to ensure that the isolation valve within the Sand Loader System operates operates properly(if non-operational, the supply of sand from the sand storage silo to the sand loading system could be impacted) as well as to update the bid documents to go out to bid for a 2nd time (due to new language to request financial information to allow for more competitive bidding and ensuring qualified bidders are being considered).

As a result, the Village's contracted engineer, Eckler Engineering, and the Public Service Department are recommending an amendment to the approved Task Order #271 (Change order No. 1) with Eckler Engineering in the amount of $5,415.00 for additional engineering and design services as well as additional/updated bidding services (Task Order No. 271 - Work Authorization EE-U08).

The proposed tasks and associated costs to provide the professional engineering services to complete this project are as follows:

| **Work to be Completed** | **Contract Amount** |
|---|---|
| Original Contract Amount - Task Order #271 | $35,759.00 |
| Add: Proposed Change Order No. 1 - Engineering & Design, Revise Bid Documents & Coordination | $ 5,415.00 |
| **Final Revised Contract Amount** | **$41,174.00** |

Note: The Village Council has approved funding ($278,386) within the within the FY 2021 Budget - Water & Sewer Enterprise Fund to support this project (design and construction).

If approved, the revised total cost for professional engineering design, bidding and construction services cost for the Sand Loader System Project within Task Order #271 will be increased to $41,174. The Village will not expend more than the amount in the approved budget as it may be adopted/amended each year for these goods and services over the term of this contract.

No additional change orders are anticipated for this project.

It is estimated that the proposed Replacement of Sand Loader Project will not require additional time to complete the design work from the the date the work authorization was issued to Eckler Engineering and the construction bid is expected to be awarded in the summer of 2021 and construction is expected to be complete by the end of FY 2021.

The proposed Change Order No. 1 (Task Order No. 271 - Work Authorization EE-U08) was prepared by Eckler Engineering and reviewed by the Assistant Public Service Director/Engineer, Utilities Superintendent, Village Attorney and Finance Director.

**FISCAL IMPACT:**

Funding to support the proposed Replacement of Sand Loader Project (Task Order No. 271) is available within the FY 2021 Budget - Water & Sewer Enterprise Fund:

| ***Allocated/Estimated Project Funding:*** | ***Amount*** |
|---|---|
| FY 2020 Approved Funding - Water & Sewer Enterprise Fund | $ 17,45 |
| FY 2021 Approved Funding - Water & Sewer Enterprise Fund | $288,38 |
| **Total Allocated/Estimated Budget** | **$305,84** |

| ***Expected Project Costs - Engineering & Design Services :*** | ***Amount*** |
|---|---|
| Original Project Cost - Engineering - Water & Sewer Enterprise Fund (TO #271): | $ 35,759.00 |
| Proposed Change Order #1 - Water & Sewer Enterprise Fund (TO #271): | $ 5,415.00 |

| | |
|---|---|
| **Total Project Cost - Engineering & Design Services** | **$ 41,174.00** |

| ***Expected Project Costs - Construction Services :*** | ***Amount*** |
|---|---|
| FY2021 - Estimated Construction Costs | $ 218,000.00 |
| **Total Project Cost - Construction Services** | **$ 259,174.00** |

| | |
|---|---|
| **TOTAL PROJECT REQUEST/COST (REVISED)** | **$300,348.00** |

The Village will not expend more than the amount in the approved budget as it may be adopted/approved each year for these goods and services for the term of the contract.

**ATTACHMENTS:**

Proposed Change Order No. 1 & Work Authorization -EE-U08 - Eckler Engineering
Approved Work Authorization EE-U08 - Eckler Engineering

ECKLER ENGINEERING, INC.

March 24, 2021 (Sent via email to: pward@vpsfl.org)
400-088.01

Mr. Paul Ward
Village of Palm Springs
226 Cypress Lane
Palm Springs, FL 33461

Dear Mr. Ward:

Reference: Engineering Scope Revision No. 1
Replacement of Sand Loader at Main WTP
VPS Project No.: 20-UTL-564-14

This Scope Revision is being submitted to modify the location of the new air compressor and to add a rotary inlet valve to the project scope. In addition, this Scope Revision includes additional fee associated with rebidding of the project due to high bids and underfunding. The rebid shall revise the Contract Documents to reflect updated dates, bid numbers and other general coordination. The anticipated work associated with this request is as follows:

1. Modify drawings to locate the new air compressor package at sand silo and not at the original scope location within the existing chemical building.

2. Add the removal and replacement of rotary inlet valve to the project.

3. General rebid coordination with the Village and project management.

4. Revise the Specifications to reflect updated bid numbers, dates (bid advertisement, pre-pre-bid conference, bid opening, etc…), and front-end documents.

5. Revise the Drawings to reflect updated bid numbers and dates.

6. Bidding services for attending meetings (pre-bid and bid opening), site visit (if necessary), answering bidder questions, bid evaluation, and recommendation of award.

For the additional items summarized above, we request **$5,415.00** for the anticipated work effort. The attached spreadsheet provides a breakdown of our proposed fee.

If you have any questions or require additional information pertaining to the attached documents or the project in general, please do not hesitate to contact me.

Sincerely,

Douglas K Hammann:A01410D0000 0178224CBADF000034A7
Digitally signed by Douglas K Hammann:A01410D0000017822 4CBADF000034A7
Date: 2021.03.25 10:33:18 -04'00'

Douglas K. Hammann, P.E.

Encl.

# ENGINEERING SCOPE REVISION

| | | | |
|---|---|---|---|
| **Project:** | Replacement of Sand Loader at Main WTP | **Client:** | Village of Palm Springs |
| **EEI Project No:** | 400-088.01 | **Contact:** | Paul Ward |
| **Revision No:** | 1 | **Date:** | March 24, 2021 |

**Nature of Revision:**

This Engineering Scope Revision covers work required to modify and prepare the drawings and specifications for rebid. Specifically, the following items shall be added:

1. Modify drawings to locate the new air compressor package at sand silo and not at the original scope location within the existing chemical building.
2. Add the removal and replacement of rotary inlet valve to the project.
3. General project management and bidding coordination.
4. Specification revisions necessary for bid coordination and updating front-end documents.
5. Revise the Drawings to reflect updated bid numbers and dates.
6. Bidding services for attending meetings (pre-bid and bid opening), site visit (if necessary), answering bidder questions, bid evaluation, and recommendation of award.

**Scope of Services:**

1. Engineering services (Items 1 through 6 above) in accordance with the attached fee breakdown spreadsheet = **$5,415.00**

| | | | |
|---|---|---|---|
| **Original Engineering Design Fee:** | $18,373.00 | **Original Time:** | 218 Days |
| **Previous Revisions:** | $0.00 | **Previous Revisions:** | 0 Days |
| **This Revision:** | $5,415.00 | **This Revision:** | 30 Days |
| **Revised Fee** | $23,788.00 | **Revised Time:** | 248 Days |

**Approved by:**

Douglas K Hammann:A01410D0000 0178224CBADF000034A7

Digitally signed by Douglas K Hammann:A01410D0000017822 4CBADF000034A7
Date: 2021.03.25 10:33:44 -04'00'

Douglas K. Hammann, P.E.
Project Manager
Eckler Engineering, Inc.

**Accepted by:**

Paul Ward
Project Manager
Village of Palm Springs

**Attachments:**

☒ Revision Fee Breakdown ☐ Other:

☒ Revised Schedule

Y:\Documents\Village\400-088.01 Replacement of Sand Loader System at Main WTP\Project Management\Engineering Scope Revision\Task Order 271 Revision 01\P. Ward - Scope Revision #01.docx



*4700 RIVERSIDE DRIVE, SUITE 110*
*CORAL SPRINGS, FL 330367*
*954/510-4700*
*FAX 954/755-2741*

# VILLAGE OF PALM SPRINGS

**REPLACEMENT OF SAND LOADER SYSTEM AT MAIN WTP**
**TASK ORDER NO. 271 (PO # 190)**
**ENGINEERING SCOPE REVISION NO. 1**

*I. LABOR* *DATE:* March 24, 2021

| | TASK DESCRIPTION | PERSONNEL | | | | | | | | | | | |
|---|---|---|---|---|---|---|---|---|---|---|---|---|---|
| | | Principal | Engineer 8 | Engineer 6 | Engineer 4 | Engineer 3 | Engineer 2 | Technician 4 | Technician 3 | Technician 2 | Resident | Administrative | |
| 1 | Modify drawings to relocate air compressor package | | 1 | | | | | 12 | | | | 1 | $1,702.00 |
| 2 | Removal Replacement of rotary inlet valve | | 1 | | | | | | | | | | $180.00 |
| 3 | General bid coordination and project management | | 1 | | 2 | | | | | | | | $426.00 |
| 4 | Specification revisions | | 1 | | 4 | | | | | | | | $672.00 |
| 5 | Drawing revisions | | 1 | | 4 | | | 8 | | | | | $1,640.00 |
| 6 | Bidding services (meetings, site visit, bidder questions, bid evaluation, recommendation of award) | | 1 | | 5 | | | | | | | | $795.00 |
| 7 | Not Used | | | | | | | | | | | | $0.00 |
| 8 | Not Used | | | | | | | | | | | | $0.00 |
| 9 | Not Used | | | | | | | | | | | | $0.00 |
| 10 | Not Used | | | | | | | | | | | | $0.00 |
| 11 | Not Used | | | | | | | | | | | | $0.00 |
| 12 | Not Used | | | | | | | | | | | | $0.00 |
| | Total Hours | 0 | 6 | 0 | 15 | 0 | 0 | 20 | 0 | 0 | 0 | 1 | |
| | Rate | $205.00 | $180.00 | $154.00 | $123.00 | $107.00 | $97.00 | $121.00 | $110.00 | $92.00 | $95.00 | $70.00 | |
| | Sub-Total Labor | $0.00 | $1,080.00 | $0.00 | $1,845.00 | $0.00 | $0.00 | $2,420.00 | $0.00 | $0.00 | $0.00 | $70.00 | $5,415.00 |
| | | | | | | | | | | | **TOTAL LABOR** | | $5,415.00 |

*II. REIMBURSABLE EXPENSES*

| EXPENSE ITEM | EXPENSE TYPE | UNIT | No. OF UNITS | COST PER UNIT | TOTAL COST |
|---|---|---|---|---|---|
| 1 | REPRODUCTION | | | | |
| | Half Size Drawings (11" x 17") | EA | 0 | $16.00 | **$0.00** |
| | Full Size Drawings (22" x 34") | EA | 0 | $0.00 | **$0.00** |
| | Documents on CD | EA | 0 | $20.00 | $0.00 |
| 2 | PHOTOCOPIES | EA | 0 | $0.25 | $0.00 |
| 3 | PLOTTING | | | | |
| | 22 X 34 (SET UP ) | EA | 0 | $15.00 | $0.00 |
| | 11 X 17 (SET UP) | EA | 0 | $15.60 | $0.00 |
| 4 | TRAVEL | | | | |
| | MILEAGE | MILE | 0 | $0.585 | $0.00 |
| | TOLLS | EA | 0 | $4.64 | |
| 5 | SUBCONSULTANTS | | | | |
| | SURVEY | LS | 0 | $0.00 | $0.00 |
| | ELECTRICAL | LS | 0 | $0.00 | $0.00 |
| | STRUCTURAL | LS | 0 | $0.00 | $0.00 |
| | GEOTECHNICAL | LS | 0 | $0.00 | $0.00 |
| | ARCHITECTURAL | LS | 0 | $0.00 | $0.00 |
| | PEER REVIEW | LS | 0 | $0.00 | $0.00 |
| | | | | **TOTAL EXPENSES** | $0.00 |

| | |
|---|---|
| **GRAND TOTAL** | $5,415.00 |
| **USE** | $5,415.00 |

**PROJECT SCHEDULE (REVISION 1)**
**REPLACEMENT OF SAND LOADER SYSTEM (MAIN WTP)**

**Village of Palm Springs**
**EEI Project Number: 400-088.01(Task Order # 271)**

| ACTIVITY | STATUS | TIME (days) | ORIGINAL SCHEDULE Start | ORIGINAL SCHEDULE End | ACTUAL SCHEDULE Start | ACTUAL SCHEDULE End | FLOAT DAYS | COMMENTS |
|---|---|---|---|---|---|---|---|---|
| Authorization to proceed | Completed | 0 | 30-Jan-20 | 30-Jan-20 | 30-Jan-20 | 30-Jan-20 | 0 | Per VPS PO # 190 (FY2020) - |
| Preliminary Coordination internally and with VILLAGE | Completed | 14 | 30-Jan-20 | 13-Feb-20 | 30-Jan-20 | 13-Feb-20 | 0 | |
| Project Site Assessment and Data Gathering | Completed | 14 | 13-Feb-20 | 27-Feb-20 | 13-Feb-20 | 26-Feb-20 | 1 | |
| Submit plans and specs (90% Submittal) | Completed | 45 | 27-Feb-20 | 12-Apr-20 | 30-Jan-20 | 15-Apr-20 | -3 | |
| Receive VILLAGE review comments | Completed | 14 | 12-Apr-20 | 26-Apr-20 | 15-Apr-20 | 5-Jun-20 | -40 | |
| Submit plans and specs (100% Submittal) | Completed | 30 | 26-Apr-20 | 26-May-20 | 5-Jun-20 | 15-Jun-20 | -20 | |
| Receive VILLAGE review comments | Completed | 14 | 26-May-20 | 9-Jun-20 | 15-Jun-20 | 10-Jul-20 | -31 | |
| Submit FINAL documents and final cost opinion (Final Submittal) | Completed | 14 | 9-Jun-20 | 23-Jun-20 | 10-Jul-20 | 10-Jul-20 | -17 | |
| Receive FINAL VILLAGE review comments | Completed | 14 | 23-Jun-20 | 7-Jul-20 | 10-Jul-20 | 10-Jul-20 | -3 | |
| Regulatory Permitting | Completed | 0 | 7-Jul-20 | 7-Jul-20 | 10-Jul-20 | 10-Jul-20 | -3 | No Regulatory permit required, maintenance replacement per FAC 62-555.520(1)(c)1 |
| Bidding Coordination and Preparation of Bidding Documents | Completed | 14 | 7-Jul-20 | 21-Jul-20 | 13-Jul-20 | 22-Oct-20 | -93 | |
| Bidding and Contract Award Phase | Completed | 45 | 21-Jul-20 | 4-Sep-20 | 29-Oct-20 | 2-Dec-20 | -89 | Bid Adertisement 10-29-2020<br>Bid Opening 12-2-2020 |
| Rebidding and Contract Award Phase | Underway | 30 | 4-Sep-20 | 4-Oct-20 | 24-Mar-21 | 23-Apr-21 | -201 | Scope Revision #1 adds 30 days - dates may change depending on approval date of Scope Revison #1 |
| Construction (days to final) | Future | 210 | 4-Oct-20 | 2-May-21 | | | - | |
| Prepare record drawings and project closeout | Future | 30 | 2-May-21 | 1-Jun-21 | | | - | |

| | | |
|---|---|---|
| Design | = | 248 |
| Construction | = | 240 |
| Total | = | 488 |

ECKLER ENGINEERING, INC.

October 25, 2019
400-000.BD

Mr. Paul Ward
Village of Palm Springs
226 Cypress Lane
Palm Springs, FL 33461

Dear Mr. Ward:

Reference: Proposal for Engineering Services
Design and Construction Phases for the
Replacement of Sand Loader System (Main WTP)
VPS Project No.: 20-UTL-564-14
Eckler Engineering Work Authorization No. EE-UXX

Enclosed is Work Authorization No. EE-UXX outlining the engineering services required for design and services during construction for the Replacement of Sand Loader System (Main WTP).

Eckler Engineering proposes to provide the design phase services for the lump sum fee of $18,373.00 and the engineering services during construction on an hourly rate plus direct expenses basis not to exceed $17,386.00 without the additional authorization of the Village Council.

If this Work Authorization meets with your approval, please coordinate placing on the next available Village Council Agenda. Following Council approval, please return one executed copy and the necessary Village of Palm Springs purchase order to our office approving Authorization to Proceed.

Eckler Engineering looks forward to the opportunity of continuing to provide professional engineering services to the Village of Palm Springs on this project. If you have any questions or require additional information pertaining to this Work Authorization, please do not hesitate to contact me.

Sincerely,

Douglas K. Hammann, P.E.

Encl.

Y:\Documents\Village\400-000.BD\Task Orders\WA EE-UXX Main WTP Sand Loader\WA Letter.docx

**VILLAGE OF PALM SPRINGS**

**CONSULTING SERVICE WORK AUTHORIZATION**

DATE: October 23, 2019 VILLAGE RFQ. NO.: 2018R-002

WORK AUTHORIZATION NO. EE-UXX FOR CONSULTING SERVICES

TASK ORDER (PROJECT) No. 271 G/L CODE: 41336-56400

ECKLER ENGINEERING PROJECT NO.: 400-0XX.01

PROJECT TITLE: Replacement of Sand Loader System (Main WTP)

This Work Authorization, when executed, shall be incorporated in and shall become an integral part of the Agreement for Professional Services dated September 13, 2018 between the Village of Palm Springs ("VILLAGE"), and Eckler Engineering, Inc. ("CONSULTANT") hereafter referred to as the Agreement.

## I. PROJECT DESCRIPTION

The existing Sand Loading System at the Village Main Water Treatment Plant was installed in 1998 as part of the Main Water Treatment Plant Phase II Improvements. The original Sand Loading System has been in continuous service at the Main Water Treatment facility for the past 21 years. Based on the location of this facility and the harsh service conditions required for operation, the system has performed well, but is beginning to deteriorate and is in constant need of maintenance and repairs. To address the replacement of this system, the following improvements are recommended per this Work Authorization:

A. Removal and replacement of the existing pneumatic sand conveyance system in its entirety inclusive of dense phase vessel, air management system panel, control panel, air compressor, receiver tank, and the desiccant dryer system.

B. Replacement design will be of similar configuration to the existing system in order to maintain familiarity with the operation and as a result of the performance of this type of system over the past 21 years.

C. In order to protect equipment that is susceptible to damage from environmental concerns such as rain and sunlight, the control systems, air management system, air compressor system, receiver tank and the air dryer system will all be located within the room formerly occupied by the previously deleted gas chlorinators. This location is just west of the sand silo and spiractors in the southeast corner of the eastern portion of the existing chemical feed building.

D. Electrical service requirements for the equipment will re-configured for the relocated equipment location as will high pressure air lines for operating the dense phase vessel. The existing sand silo will remain as existing.

E. Where necessary to provide for proper operation, the sand slurry feed lines to the existing spiractors will be removed and replaced with new similar material and diameter piping systems.

F. Ethernet communications and coordination with the proposed Main WTP SCADA system for the purposes of incorporating the proposed pneumatic sand conveyance system.

G. Structural modifications to the former chlorinator room including new equipment pads, pipe supports, and ventilation system improvements for air compressor operation. Ventilation improvements shall consist of louver additions.

H. Miscellaneous civil and sitework improvements to support the system modifications.

## II. SCOPE OF SERVICES

The following is a description of the services to be provided under this Work Authorization.

### A. DESIGN PHASE

The Design Phase will include the following services:

#### TASK D1 - PROJECT ADMINISTRATION/MANAGEMENT

This task focuses on the administration of the project including project setup, client interface and general project management and administration.

#### TASK D2 - DATA GATHERING AND PRELIMINARY COORDINATION

This task focuses on obtaining the necessary preliminary information required to prepare detailed engineering plans and specifications.

1. Visit the site and review pertinent features that may impact design and/or construction.

2. Collect existing facility's data including field conditions, and other information needed to complete the design.

3. Meet with appropriate VILLAGE staff to discuss the project requirements.

4. Coordination and completion of SUBCONSULTANT's professional services for electrical engineering.

## TASK D3 - PRELIMINARY DESIGN REPORT

This task not required. The design conditions are currently known and defined.

## TASK D4 - DRAWINGS AND ENGINEERING

This task consists of the engineering and the development of plans necessary to construct this project. The CONSULTANT will prepare detailed drawings for the proposed work as discussed in this task order. A tentative list of drawings to be prepared for this project is presented in ATTACHMENT 1.

## TASK D5 - SPECIFICATION PREPARATION

1. Prepare Standard EJCDC (2013 Edition) Contract Forms, Bidding Documents and Contract Conditions required for this project.

2. Prepare technical specifications required for this project in Division 1 through Division 16. These specifications, utilizing the CSI format, will be prepared and will consist of written technical descriptions of materials, equipment and construction systems, standards and workmanship required for this project as developed by CONSULTANT. A tentative list of specification sections to be prepared for this project is presented in ATTACHMENT 2.

## TASK D6 - PERMIT PREPARATION ASSISTANCE

This task consists of the preparation of the following construction permit application submittals:

1. No regulatory permits are anticipated. Work required is maintenance per FAC 62-555.520(1)(c)1. Notification to the Department per Rule will be provided, if applicable.

   Any additional permits required beyond the above will be considered as outside the scope of this proposal.

## TASK D7 - PREPARE OPINION(S) OF PROBABLE CONSTRUCTION COST

Prepare the 90%, 100% and final completion level(s) opinion of probable construction cost for new facilities and improvements proposed under this project.

## TASK D8 - BIDDING ASSISTANCE SERVICES

This task will include work necessary to assist the VILLAGE with the bidding of the project. This work may include the following:

1. Coordinate bidding requirements with VILLAGE and prepare electronic bid documents for distribution by the Village Clerk's office. Bidding documents shall be in .pdf format on CD or other requested media.

2. Assist VILLAGE Clerk's Office with the coordination of the bidding documents, the advertisement for bids, respond to communications from contractors, and prepare addenda information as required. The VILLAGE Clerk's Office shall publish/distribute all Addenda.

3. Attend the prebid meeting and prepare/distribute minutes to registered bidding contractors. VILLAGE Clerk's Office shall publish final Prebid Meeting Minutes.

4. Attend the bid opening and tabulate the bids provided by interested contractors.

**TASK D9 - BID EVALUATION AND RECOMMENDATION OF AWARD ASSISTANCE**

This task shall consist of the review and evaluation of the bids and the recommendation of a bidder for award of a contract. A recommendation of award letter shall be prepared and submitted to VILLAGE.

**TASK D10 - SUBMIT AND REVIEW (QUALITY CONTROL)**

The CONSULTANT will make the following submittals at various completion levels of this project for the purpose of VILLAGE's review and comment for coordination and quality control. A review meeting will be requested following each submittal to discuss and receive comments from the VILLAGE. The VILLAGE's comments shall be incorporated into revisions prior to the next subsequent quality control submittal. Quality control submittals for this project are anticipated at the following completion levels:

1. 90% Drawings and Specifications

2. 100% Drawings and Specifications

3. Final Drawings and Specifications

   The CONSULTANT will incorporate the agreed-upon revisions made by the VILLAGE.

   A total of three (3) meeting(s) with the VILLAGE is the level of effort for this Task.

## B. ENGINEERING SERVICES DURING CONSTRUCTION

### TASK C1 – PROJECT ADMINISTRATION/MANAGEMENT

This task focuses on the administration of the project including project setup, client interface and general project management and administration.

### TASK C2 - PRECONSTRUCTION ACTIVITIES PRIOR TO NOTICE TO PROCEED

After issuance of a Notice of Award by VILLAGE, assist in the preparation and signing of the Contract Documents. The CONSULTANT will also undertake other preconstruction activities which include coordinating, attending and preparing minutes of the preconstruction conference meeting and assisting the Contractor in finalizing the permits required for the construction of this project by providing the required number of signed/sealed drawing sets.

### TASK C3 - CONSULT AND ADVISE

Provide technical advice and assistance to VILLAGE during the construction period and provide necessary interpretations and clarifications of the Contract Documents as required by VILLAGE or Contractor by responding to RFI's or other documentation. An evaluation of and response to an estimated two (2) RFI's is the level of effort that is estimated for this task.

### TASK C4 - REVIEW SHOP DRAWINGS

Review Shop Drawings and samples, the results of tests and inspections, and other data submitted by the Contractor in accordance with the Contract Documents. A total of ten (10) submittals is the estimated basis for this item's budget.

### *TASK C5 - REVIEW PAY REQUESTS AND SCHEDULES*

Review estimated three (3) monthly pay requests and make recommendations for payment to VILLAGE. Monthly pay requests will be reviewed in the field and an agreement reached between the Contractor, VILLAGE's project representative(s), and the CONSULTANT prior to formal submittal to VILLAGE for payment. Review the Contractor's preliminary and monthly progress schedules through completion.

### TASK C6 - PERFORM PERIODIC AND MILESTONE INSPECTIONS

CONSULTANT will make periodic site visits at intervals appropriate to the various stages of construction to observe the work, determine conformity with the plans and specifications, and compliance with the construction permits. It is anticipated that there will be a total of two (2) visits.

Perform inspections to determine that the project has achieved substantial completion and readiness for final acceptance and that the work has been completed in general conformance with the Contract Documents to certify completion of construction to permitting agencies, where applicable. Two (2) such site visits are anticipated.

**TASK C7 - PROGRESS MEETINGS**

This task not required.

**TASK C8 - CONTRACT MODIFICATIONS**

Develop the necessary data, notes and clarification drawings required to prepare contract modifications to reflect adjustments to the construction project. One (1) contract modification incorporating a total of four (4) items, is the estimated basis for this budget item.

**TASK C9 - PROJECT CLOSEOUT**

Review the Contractor's record drawing information which shows the work as it was constructed. Prepare for VILLAGE record drawings and prints showing those changes made during the construction process based upon information provided by the Contractor as follows:

1. CONSULTANT shall prepare record drawings based on Contractor's field data.

2. CONSULTANT shall submit record documents to VILLAGE.

3. CONSULTANT shall attend the final project reconciliation meetings with VILLAGE and CONTRACTOR.

***TASK C10 - REGULATORY AGENCY DOCUMENTATION AND PROJECT CLOSEOUT SUBMITTALS***

Project services in connection with preparing acknowledgment of Final Completion construction submittals with record drawings to the following agencies.

1. Palm Springs Building Department

**TASK C11 - SPECIAL SERVICES**

The CONSULTANT shall provide special services during construction consisting of the following items:

Resident Services

To monitor that project is constructed in complete conformance with the Contract Documents.

Services which will be provided by the CONSULTANT's resident project representative will consist of the following:

Make periodic on-site field observations of the Contractor's performance. The limits of the authority of the on-site representative are as defined within the Construction Contract Documents.

1. Observe any tests and review the results of tests required of the Contractor by the Contract Documents.

2. Observe the placement of reinforcing steel and all concrete pours. Observe the construction of all piping and equipment placement.

3. Assist with commissioning, startup and check out the operation of all new equipment and control systems.

4. Assist in the development of punch lists in conjunction with the milestone inspections to determine if the project has achieved Substantial and Final Completion and that the work has been completed in general conformance with the Contract Documents.

5. In order to estimate the efforts of the CONSULTANT's project representative, it is anticipated that a person would need to visit the project site ten (10) times, approximately 3 hours per visit.

## III. DELIVERABLES

Project deliverables shall be in accordance with Attachment 1.

## IV. SCHEDULE

Upon receipt of Notice-To-Proceed the CONSULTANT will complete the services identified in this Work Authorization within the schedule outlined in Attachment 3.

## V. COMPENSATION AND PAYMENT

The CONSULTANT will perform the tasks as outlined in the scope of services for the fees as outlined in Tables 1 and 2 and further detailed in Attachments 5 and 6.

### A. DESIGN PHASE

1. For services described in Part II. A. - Design Phase, Tasks D1 through D10, the lump sum fee of **$18,373.00**.

**TABLE 1**
**DESIGN PHASE**
**BUDGET SUMMARY**

| Description | Total |
|---|---|
| D1 - Project Administration / Management | $2,310.00 |
| D2 - Data Gathering and Preliminary Coordination | $1,000.00 |
| D3 - Not Used | $0.00 |
| D4 - Drawings and Engineering | $7,370.00 |
| D5 - Specification Preparation | $1,350.00 |
| D6 - Permitting | $0.00 |
| D7 - Prepare Opinions of Probable Construction Cost | $321.00 |
| D8 - Bidding Assistance Services | $1,470.00 |
| D9 - Bid Evaluation and Recommendation of Award | $864.00 |
| D10 - Submit and Review (Quality Control) | $1,830.00 |
| Reimbursable Expenses | $1,858.00 |
| **TOTAL LUMP SUM FEE** | **$18,373.00** |

**B. CONSTRUCTION PHASE**

1. For services described in Part II. B. - Construction Phase, Tasks C1 through C11, not to exceed fee of **$17,386.00.**

**TABLE 2**

**ENGINEERING SERVICES DURING CONSTRUCTION**
**BUDGET SUMMARY**

| Description | Total |
|---|---|
| C-1 Project Administration / Management | $2,000.00 |
| C-2 Preconstruction Activities Prior to Notice to Proceed | $1,896.00 |
| C-3 Consult and Advise | $1,290.00 |
| C-4 Review Shop Drawings | $2,480.00 |
| C-5 Review Pay Requests & Schedules | $978.00 |
| C-6 Perform Periodic & Milestone Inspections | $1,616.00 |
| C-7 Not Used | $0.00 |
| C-8 Contract Modifications | $786.00 |
| C-9 Project Closeout | $2,474.00 |
| C-10 Not Used | $0.00 |
| C-11 Special Services | $3,200.00 |
| Reimbursable Expenses | $666.00 |
| **TOTAL NOT-TO-EXCEED FEE** | **$17,386.00** |

## VI. ASSUMPTIONS

This Work Authorization does not include the provision of the following items:

A. Payment of permit fees.

B. Any expert witness or testimony services.

C. Services not specifically indicated in this Work Authorization.

This Work Authorization assumes the following data or assistance will be provided by VILLAGE:

A. Attendance at project meetings.

B. General project review, where required.

C. Provide pertinent project data and information available from VILLAGE when requested by CONSULTANT.

D. Facility access and other project related information requested by CONSULTANT.

E. VILLAGE Project Representative Services (Part time when CONSULTANT's representative is not on site.)

Provide editable files (Word format) of VILLAGE's EJCDC based (2013 Edition) Contract forms. If unavailable, CONSULTANT shall use documents from recent VILLAGE projects.

Services which will be provided by the VILLAGE resident project representative will include the following:

1. Monitor that project is constructed in conformance with the Contract Documents.

2. Make periodic on-site field observations of the Contractor's performance. The limits of the authority of the on-site representative are as defined within the Contract Documents.

3. Observe field tests and review the results of tests required by the Contract Documents.

4. Assist in the development of punch lists in conjunction with the milestone inspections to determine if the project has achieved Substantial and Final Completion and that the work has been completed in general conformance with the Contract Documents.

5. Provide daily reports of Contractor activity to the CONSULTANT on a form provided by the CONSULTANT.

6. Provide photographs of the work during construction showing typical construction progress.

7. Keep the CONSULTANT informed of any changes which need to be made and assist CONSULTANT with the change decision.

8. Be present at all required times for permit compliance.

## VII. AGREEMENT REFERENCE

The work authorized under this Work Authorization shall be performed under the terms and conditions described within the Professional Services Agreement dated September 13, 2018, by and between the Village of Palm Springs ("VILLAGE") and Eckler Engineering, Inc. ("CONSULTANT"). Compensation shall not exceed the hourly rates currently in effect under this Agreement.

**ECKLER ENGINEERING, INC.**

By: _____

Print Name: Douglas K. Hammann, P.E.

Title: President

**VILLAGE OF PALM SPRINGS**

By: _____

Date: _____

Village Attorney's Office

Approved as to form and legality

By: _____

(Required if over $25,000)

(Remainder of page left blank intentionally.)

## ATTACHMENT 1

## WORK AUTHORIZATION NUMBER EE-UXX
## REPLACEMENT OF SAND LOADER SYSTEM (MAIN WTP)
## TENTATIVE LIST OF DRAWINGS

| Drawing Sheet No. | Title |
|---|---|
| **General** | |
| | Cover sheet |
| G-1 | Project Location Map & Index to Drawings |
| G-2 | General Notes and Legends |
| G-3 | Abbreviations |
| G-4 | Mechanical Legends and Symbols |
| G-5 | Architectural and HVAC Legends |
| G-6 | Process and Instrumentation Legends (Sheet 1) |
| G-7 | Process and Instrumentation Legends (Sheet 2) |
| G-8 | Design Criteria |
| G-9 | Specifications |
| G-10 | Specifications |
| **Civil** | |
| C-1 | Partial Site Plan |
| C-2 | Demolition Plan and Details |
| C-3 | Chemical Feed Building Partial Demolition Plan and Details |
| CD-01 | Standard Details – Civil |
| **Architectural** | |
| A-1 | Chemical Feed Building Floor Plan and Elevations |
| A-2 | Finish Schedules |
| A-3 | Door and Hardware Schedules |
| AD-1 | Standard Details – Architectural |
| **Structural** | |
| S-1 | Chemical Feed Building Floor Plans and Sections |
| SD-1 | Standard Details – Structural |

**Mechanical**

| | |
|---|---|
| M-1 | Piping Schedule and General Mechanical Notes |
| M-2 | Sand Silo and Spiractor Area Mechanical Plan |
| M-3 | Dense Phase Pneumatic Transfer System Equipment Plans |
| M-4 | Dense Phase Pneumatic Transfer System Details |
| MD-1 | Standard Details – Mechanical |

**Instrumentation**

| | |
|---|---|
| I-1 | Overall Plant Schematic |
| I-2 | Unit Process 2 - Softening (Lime) |
| ID-1 | Standard Details – Instrumentation and Controls |

**Electrical**

| | |
|---|---|
| E-1 | Electrical Notes and Legends |
| E-2 | Existing Sand System Electrical Demolition Plan |
| E-3 | Pneumatic Sand System Electrical Modification Plan |
| E-4 | Existing MCCA One Line Diagram - Modification |
| E-5 | Proposed Pneumatic Sand System Power and Instrumentation One Line Diagram |
| E-6 | Main WTP Network Diagram Modification |
| ED-1 | Standard Details – Electrical |
| ED-2 | Standard Details – Electrical |

(Remainder of page left blank intentionally.)

## ATTACHMENT 2

## WORK AUTHORIZATION NUMBER EE-UXX
## REPLACEMENT OF SAND LOADER SYSTEM (MAIN WTP)

## TENTATIVE LIST OF SPECIFICATIONS

| SECTION NO. | TITLE |
|---|---|
| **PART 1** | **BIDDING REQUIREMENTS** |
| 00111 | Advertisement for Bids |
| 00200 | Instructions to Bidders |
| 00430 | Bid Bond (Penal Sum) |
| 00431 | Tabulation of Subcontractors and Suppliers |
| 00440 | Florida Trench Safety Act Certification |
| 00451 | Qualification Statement |
| 00452 | Disputes |
| 00453 | Noncollusion Affidavit |
| 00454 | Drug-Free Workplace Certificate |
| 00455 | Public Entity Crimes |
| **PART 2** | **CONTRACT FORMS** |
| 00510 | Notice of Award |
| 00520 | Agreement |
| 00550 | Notice to Proceed |
| 00610 | Performance Bond |
| 00615 | Payment Bond |
| **PART 3** | **CONTRACT CONDITIONS** |
| 00700 | General Conditions |
| 00800 | Supplementary Conditions |
| **PART 4** | **MISCELLANEOUS DOCUMENTS** |
| 00620 | Contractor's Application for Payment |
| 00625 | Certificate of Substantial Completion |
| 00940 | Work Change Directive |
| 00941 | Change Order |
| 00942 | Field Order |
| **PART 5** | **SPECIFICATIONS** |

Technical Specifications will be included in Drawing Set

## ATTACHMENT 3

## WORK AUTHORIZATION NUMBER EE-UXX
## REPLACEMENT OF SAND LOADER SYSTEM (MAIN WTP)
## PRELIMINARY PROJECT SCHEDULE

| Activity | Duration (Days) | Cumulative Time (Days) |
|---|---|---|
| Authorization to Proceed | 0 | 0 |
| Preliminary Coordination internally and with VILLAGE | 14 | 14 |
| Project Site Assessment and Data Gathering | 14 | 28 |
| Submit Plans and Specifications (90%) | 45 | 73 |
| Receive VILLAGE Review Comments* | 14 | 87 |
| Submit Plans and Specifications (100%) | 30 | 117 |
| Receive VILLAGE Review Comments* | 14 | 131 |
| Submit Plans and Specifications (Final Submittal) with Permit Applications as applicable | 14 | 145 |
| Receive Final VILLAGE Review Comments and Permit* Application Signatures | 14 | 159 |
| Regulatory Permitting | N/A | N/A |
| Bidding Coordination with VILLAGE* | 14 | 173 |
| Bidding and Contract Award Phase* | 45 | 218 |
| Construction (Final Completion) | 210 | 428 |
| Project Closeout | 30 | 458 |

* The schedule is based upon conducting a review meeting within 14 calendar days after the Village receives the design submittal. All review comments shall be provided to Consultant within 14 calendar days after the Village receives the submittal. An adjustment to the overall schedule will be required in the event the review meeting takes longer to be conducted and/or obtaining comments takes longer to receive.

Detailed schedule will be provided upon receipt of authorization to proceed and will include specific submittal dated.

## ATTACHMENT 4

## WORK AUTHORIZATION NUMBER EE-UXX
## REPLACEMENT OF SAND LOADER SYSTEM (MAIN WTP)

## LIST OF PROJECT DELIVERABLES

**DESIGN PHASE**

A. 90% Design Submittal

1. One (1) set of 11" x 17" Drawings, 90% complete.
2. 90% Completion Estimate of Probable Construction Cost.

B. 100% Design Submittal

1. One (1) set of 11" x 17" Drawings, 100% complete.
2. 100% Completion Estimate of Probable Construction Cost.

C. Final Design Submittal

1. One (1) set of 11" x 17" Drawings, 100% complete.
2. Final Completion Estimate of Probable Construction Cost.

D. Permit Documents

1. Not Applicable

**BIDDING SERVICES**

A. Bidding (Final) Coordination Submittal

1. One (1) set of 11" x 17" Drawings (Final).
2. One (1) Final Completion Estimate of Probable Construction Cost.
3. Four (4) CD's with bid documents in .pdf format.

B. Pre-Bid

1. Pre-bid Meeting Minutes Information.
2. Addenda Information, as required, to the VILLAGE and/or Contractors.

C. Post Bid

1. Bid Tabulation.

2. Recommendation of Award Letter.

3. Contractor Notice of Tentative Award.

**CONSTRUCTION PHASE**

A. Pre-Construction

1. Three (3) sets of 22" x 34" signed/sealed drawings and specifications for Building Permit Submittal.

2. Three (3) sets of drawings (11" x 17") and specifications for VILLAGE's use during construction.

3. Three (3) sets of drawings (11" x 17") and specifications for CONTRACTOR's use during construction.

4. Pre-construction conference meeting agenda and minutes.

B. Shop Drawings

1. Electronic copies of accepted and final shop drawings.

C. Construction Inspection

1. Site visit reports will be provided for each site visit in accordance with Task(s) C6.

D. Progress Meetings

1. N/A

E. Contract Modifications

1. Four (4) copies of all completed contract modifications.

F. Pay Requests

1. Copies of reviewed and approved partial and final pay request applications.

G. Regulatory Permit Closeout Documents

1. Not Applicable

H. Record Drawings and Project Closeout

1. Two (2) sets of record drawings.

2. Two (2) CD's with record drawings in .pdf and ACAD (2016 Civil 3D) formats.

I. Commissioning and Startup Reports.

1. Pneumatic Conveyance System Startup Report.

(Remainder of page left blank intentionally.)

# VILLAGE OF PALM SPRINGS

**REPLACEMENT OF SAND LOADER SYSTEM (MAIN WTP)**
**WORK AUTHORIZATION NO. EE-UXX**
**ATTACHMENT 5**

DATE: October 24, 2019

*I. DESIGN PHASE*

| | TASK DESCRIPTION | PERSONNEL | | | | | | | | | | | |
|---|---|---|---|---|---|---|---|---|---|---|---|---|---|
| | | Principal | Engineer 8 | Engineer 5 | Engineer 4 | Engineer 3 | Engineer 1 | Technician 4 | Technician 3 | Technician 2 | Resident | Administrative | |
| D1 | Project Administration / Management | 0 | 7 | | | | | | | | | 15 | $2,310.00 |
| D2 | Data Gathering and Preliminary Coordination | | 4 | | | | | | | | | 4 | $1,000.00 |
| D3 | Not Used | | | | | | | | | | | | $0.00 |
| D4 | Drawings and Engineering | | 9 | | | 0 | | | 51 | 0 | | 2 | $7,370.00 |
| D5 | Specification Preparartion | | 4 | | | 0 | | | | | | 9 | $1,350.00 |
| D6 | Permitting | | 0 | | | 0 | | | | | | 0 | $0.00 |
| D7 | Prepare Opinions of Probable Construction Cost | | 0 | | | 3 | | | | | | | $321.00 |
| D8 | Bidding Assistance Services | | 7 | | | | | | | | | 3 | $1,470.00 |
| D9 | Bid Evaluation and Recommendation of Award | | 2 | | | | 4 | | | | | 2 | $864.00 |
| D10 | Submit and Review (Quality Control) | | 9 | | | 0 | | | | | | 3 | $1,830.00 |
| D11 | Not Used | | | | | | | | | | | | $0.00 |
| D12 | Not Used | | | | | | | | | | | | $0.00 |
| | Total Hours | 0 | 42 | 0 | 0 | 3 | 4 | 0 | 51 | 0 | 0 | 38 | |
| | Rate | $205.00 | $180.00 | $137.00 | $123.00 | $107.00 | $91.00 | $121.00 | $110.00 | $92.00 | $95.00 | $70.00 | |
| | Sub-Total Labor | $0.00 | $7,560.00 | $0.00 | $0.00 | $321.00 | $364.00 | $0.00 | $5,610.00 | $0.00 | $0.00 | $2,660.00 | |
| | | | | | | | | | | | **TOTAL DESIGN PHASE LABOR** | $16,515.00 | $16,515.00 |

*II. REIMBURSABLE EXPENSES DESIGN PHASE*

| EXPENSE ITEM | EXPENSE TYPE | UNIT | NO. OF UNITS | COST PER UNIT | TOTAL COST |
|---|---|---|---|---|---|
| 1 | REPRODUCTION | | | | |
| | Half Size drawings (11"x17") | EA | 0 | $17.00 | $0.00 |
| | Full Size drawings (22"x34") | EA | 0 | $39.44 | $0.00 |
| | Specification Booklets | EA | 0 | $10.00 | $0.00 |
| | Prepare CD's (Bid Documents) | EA | 0 | $10.00 | $0.00 |
| 2 | PHOTOCOPIES | EA | 0 | $0.20 | $0.00 |
| 3 | PLOTTING | | | | |
| | 22 X 34 (SET UP) | EA | 34 | $3.00 | $102.00 |
| | 11 X 17 (SET UP) | EA | 102 | $3.00 | $306.00 |
| 4 | TRAVEL | | | | |
| | MILEAGE | MILE | 0 | $0.545 | $0.00 |
| | TOLLS | EA | 0 | $3.30 | $0.00 |
| 5 | SUBCONSULTANTS | | | | |
| | SURVEY | LS | 0 | $0.00 | $0.00 |
| | ELECTRICAL | LS | 1 | $750.00 | $750.00 |
| | STRUCTURAL | LS | 1 | $700.00 | $700.00 |
| | GEOTECHNICAL | LS | 0 | $0.00 | $0.00 |
| | HYDROGEOLOGIC | LS | 0 | $0.00 | $0.00 |
| | PERMIT FEES | LS | 0 | $0.00 | $0.00 |
| | SOFT DIGS | LS | 0 | $0.00 | $0.00 |
| | | | | **TOTAL DESIGN PHASE EXPENSES** | $1,858.00 |

| | |
|---|---|
| **GRAND TOTAL** | $18,373.00 |
| **USE** | $18,373.00 |

# VILLAGE OF PALM SPRINGS

**REPLACEMENT OF SAND LOADER (MAIN WTP)**
**WORK AUTHORIZATION NO. EE-UXX**
**ATTACHMENT 6**

*I. ENGINEERING SERVICES DURING CONSTRUCTION*

*DATE:* October 24, 2019

| | TASK DESCRIPTION | PERSONNEL | | | | | | | | | | | |
|---|---|---|---|---|---|---|---|---|---|---|---|---|---|
| | | Principal | Engineer 8 | Engineer 5 | Engineer 4 | Engineer 3 | Engineer 1 | Technician 4 | Technician 3 | Technician 2 | Resident | Administrative | |
| C1 | Project Administration/Management | | 8 | | | | | | | | | 8 | $2,000.00 |
| C2 | Preconstruction Activities Prior to Notice to Proceed | | 6 | | 4 | | | | | 2 | | 2 | $1,896.00 |
| C3 | Consult and Advise | | 2 | | 4 | | | | | 4 | | 1 | $1,290.00 |
| C4 | Review Shop Drawings | | 5 | | 10 | | | | | | | 5 | $2,480.00 |
| C5 | Review Pay Requests and Schedules | | 0.75 | | 6 | | | | | | | 1.5 | $978.00 |
| C6 | Perform Periodic and Milestone Inspections | | 0 | | 12 | | | | | | | 2 | $1,616.00 |
| C7 | Not Used | | 0 | | 0 | | | | | | | 0 | $0.00 |
| C8 | Contract Modifications | | 1 | | 2 | | | | 2 | | | 2 | $786.00 |
| C9 | Project Closeout | | 2 | | 8 | | | | 9 | | | 2 | $2,474.00 |
| C10 | Not Used | | | | | | | | | | | | $0.00 |
| C11 | Special Services | | | | | | | | | | 30 | 5 | $3,200.00 |
| C12 | Not Used | | | | | | | | | | | | $0.00 |
| | Total Hours | 0 | 24.75 | 0 | 46 | 0 | 0 | 0 | 11 | 6 | 30 | 28.5 | |
| | Rate | $205.00 | $180.00 | $137.00 | $123.00 | $107.00 | $91.00 | $121.00 | $110.00 | $92.00 | $95.00 | $70.00 | |
| | Sub-Total Labor | $0.00 | $4,455.00 | $0.00 | $5,658.00 | $0.00 | $0.00 | $0.00 | $1,210.00 | $552.00 | $2,850.00 | $1,995.00 | |
| | | | | | | | | | TOTAL LABOR | | $16,720.00 | | $16,720.00 |

*II. REIMBURSABLE EXPENSES*

| EXPENSE ITEM | EXPENSE TYPE | UNIT | No. OF UNITS | COST PER UNIT | TOTAL COST |
|---|---|---|---|---|---|
| 1 | REPRODUCTION | | | | |
| | Half Size Drawings (11" x 17") | EA | 0 | $18.50 | $0.00 |
| | Full Size Drawings (22" x 34") | EA | 0 | $42.92 | $0.00 |
| | Specification Booklets | EA | 0 | $10.00 | $0.00 |
| | Record Document CD's | EA | 0 | $10.00 | $0.00 |
| 2 | PHOTOCOPIES | EA | 0 | $0.25 | $0.00 |
| | PLOTTING | | | | |
| 3 | 22 X 34 (SET UP ) | EA | 37 | $15.00 | $555.00 |
| | 11 X 17 (SET UP) | EA | 37 | $3.00 | $111.00 |
| | TRAVEL | | | | |
| 4 | MILEAGE | MILE | 720 | $0.000 | $0.00 |
| | TOLLS | EA | 10 | $0.00 | $0.00 |
| | SUBCONSULTANTS | | | | |
| | SURVEY | LS | 0 | $0.00 | $0.00 |
| | ELECTRICAL | LS | 0 | $0.00 | $0.00 |
| 5 | STRUCTURAL | LS | 0 | $0.00 | $0.00 |
| | GEOTECHNICAL | LS | 0 | $0.00 | $0.00 |
| | ARCHITECTURAL | LS | 0 | $0.00 | $0.00 |
| | HVAC | LS | 0 | $0.00 | $0.00 |
| | | | | TOTAL EXPENSES | $666.00 |

| | |
|---|---|
| **GRAND TOTAL** | $17,386.00 |
| **USE** | $17,386.00 |

# Village of Palm Springs

# Executive Brief

**AGENDA DATE:** May 13, 2021

**DEPARTMENT:** Public Service

---

**ITEM 6.12:** Approve Change Order No. 1 (Task Order #261 - Work Authorization EE-P01) - Professional Engineering Services - Storage Building for Maintenance Equipment - Public Service Department (FY 2021 Budget Funded - General Fund Public Works) - Eckler Engineering

**SUMMARY:**

On January 9, 2020, the Village Council approved Task Order No. 261 (Work Authorization EE-P01) with Eckler Engineering for professional engineering services associated with the design and construction of the Storage Building for Maintenance Equipment (Task Order No. 261) at the Main Water Treatment Plant (WTP) in the amount of $ 43,312.50.

Currently, the Public Service Department is requesting approval of Change Order No. 1 to Task Order No. 261 (Work Authorization EE-P01) for Eckler Engineering to provide additional engineering and design services to reflect the construction of one (1) building on this property instead of two (2) that were previously shown as well as to update the bid documents to go out to bid for a 2nd time (due to pricing/bids that were significantly over the Village's budgeted amount).

Note: In 2017, an open 120' x 40' pre-engineered metal structure/building was constructed near the southeastern boundary of the property to provide covered storage for Public Works equipment and vehicles; however, additional storage area is needed at this time. In order to maintain access to existing Village water treatment facilities and existing Village Public Works facilities, the available area to construct additional storage is limited and the Engineer is proposing an additional storage structure to be built on the northeast side of the existing

storage structure, which is expected to add approximately 1,500 additional square feet of covered storage space.

Note: In an effort to lower design and construction costs for this project (and to ensure vendor interest to take on this project) it has been recommended by Eckler Engineering and Village Staff to combine this project (Task Order No. 261) with the proposed Materials Storage Building that will be located at the Village's Utility Maintenance facility - 2400 Kirk Road (Task Order No. 260) and bid them as one, single project.

As a result, the Village's contracted engineer, Eckler Engineering, and the Public Service Department are recommending an amendment to the approved Task Order No. 261 (Change Order #1) with Eckler Engineering in the amount of $5,000 to support additional engineering and design services as well as additional/updated bidding services (Task Order No. 261 - Work Authorization EE-P01).

The proposed tasks and associated costs to provide the professional engineering services to complete this project are as follows:

| **Work to be Completed** | **Contract Amount** |
|---|---|
| Original Contract Amount - Design & Bidding | $22,494.00 |
| Original Contract Amount - Construction Services | $20,818.50 |
| Add: Propose Change Order No. 1 | $ 5,000.00 |
| **Final Revised Contract Amount** | **$48,312.50** |

Note: The Village Council has approved funding ($220,000) within the FY 2021 Budget - General Fund to support this project (design & construction).

If approved, the revised total cost for professional engineering design, bidding and construction services cost for the Storage Building for Maintenance Equipment Project within Task Order No. 261 will be increased to $48,312.50. The Village will not expend more than the amount within the approved budget as it may be adopted/amended each year for these goods and services over the term of this contract.

No additional change orders are anticipated for this project.

It is estimated that the Proposed Storage Building for Maintenance Equipment project will require an additional thirty (30) days (May/June 2021) to complete the design work from the date the change order is issued to Eckler Engineering and construction is estimated to be

completed six (6) months (June/July 2022) following the completion of Material Storage Building project at 2400 Kirk Road, which is expected to be completed 11 months from the Notice to Proceed by the Village.

The proposed Change Order #1 (Task Order No. 261 - Work Authorization EE-P01) was prepared by Eckler Engineering and reviewed by the Assistant Public Service Director/Engineer, Public Service Project Manager, Assistant Village Manager, Village Attorney and the Finance Director.

**FISCAL IMPACT:**

Funding to support the proposed Storage Building for Maintenance Equipment Project (Task Order #261) is available within the FY 2021 Budget - General Fund.

| ***Allocated/Estimated Project Funding*** | ***Amount*** |
|---|---|
| FY 2020 Actual - Engineering & Design Cost - General Fund (TO #261): | $ 21,369.30 |
| FY 2021 Approved Budget - General Fund (TO #261): | $220,000.00 |
| **Total Allocated/Estimated Budget** | **$241,369.30** |

| ***Expected Project Costs - Engineering & Design Services*** | ***Amount*** |
|---|---|
| Original Project Cost (Design & Bidding) - General Fund Public Works (TO #261): | $ 22,494.00 |
| Original Project Cost (Const Services) - General Fund Public Works (TO #261): | $ 20,818.50 |
| Proposed Change Order No. 1 | $ 5,000.00 |
| **Total Project Cost - Engineering & Design Services** | **$ 48,312.50** |
| | |
| ***Expected Project Costs - Construction Services*** | |
| Projected Construction Costs - General Fund (TO # 261): | $203,000.00 |
| **Total Project Cost - Construction Services** | **$203,000.00** |
| | |
| **TOTAL PROJECT REQUEST/COST (REVISED)** | **$251,312.50** |

The Village will not expend more than the amount in the approved budget as it may be adopted / approved each year for these goods and services for the term of the contract.

An internal budget transfer or amendment to support this proposed cost above the budgeted amount may be completed within the General Fund at a later date, if necessary.

**ATTACHMENTS:**

Proposed Change Order No. 1 & Work Authorization EE-P01 - Eckler Engineering
Approved Work Authorization #EE-P01 - Eckler Engineering

ECKLER ENGINEERING, INC.

February 5, 2021 (Sent via email to: wsanchez@vpsfl.org)
400-085.01

Mr. Walter Sanchez
Village of Palm Springs
226 Cypress Lane
Palm Springs, FL 33461

Dear Mr. Sanchez:

Reference: Engineering Scope Revision No. 1
Main WTP Equipment Storage Buildings
Eckler Engineering Work Authorization No. EE-P01
Village P.O. No.: 057 (FY 2021)

This Scope Revision is being submitted at the Village's request to rebid the Main WTP Equipment Storage Building projects due to high bids and underfunding. The rebid shall revise the Contract Documents to reflect the Kirk Road Pipe and Material Storage Building as the base bid with the East Building at the Main WTP as an alternate. The North Building at the Main WTP shall be eliminated from the bid. The anticipated work associated with this request is as follows:

1. General bid coordination with the Village and project management.

2. Revise the Specifications to reflect updated bid numbers, dates (bid advertisement, pre-pre-bid conference, bid opening, etc…), and description of work.

3. Revise the Drawings to reflect updated bid numbers and elimination of the North Building at the Main WTP, including any associated notes and details.

4. Bidding services for attending meetings (pre-bid and bid opening), site visit (if necessary), answering bidder questions, bid evaluation, and recommendation of award.

For the additional items summarized above, we request **$5,000.00** for the anticipated work effort. The attached spreadsheet provides a breakdown of our proposed fee.

If you have any questions or require additional information pertaining to the attached documents or the project in general, please do not hesitate to contact me.

Sincerely,

Chase Dickinson

Chase Dickinson, P.E.

Encl.

# ENGINEERING SCOPE REVISION

| | | | |
|---|---|---|---|
| **Project:** | Main WTP Equipment Storage Building | **Client:** | Village of Palm Springs |
| **EEI Project No:** | 400-085.01 | **Contact:** | Walter Sanchez |
| **Revision No:** | 1 | **Date:** | February 3, 2021 |

**Nature of Revision:**

This Engineering Scope Revision covers work required to modify and prepare the drawings and specifications for rebid. Specifically, the following items shall be added:

1. General project management and bidding coordination.
2. Specification revisions for necessary for bid coordination, making the Kirk Road building the base bid and eliminating the North Building at the Main WTP.
3. Drawing revisions necessary to eliminate the North Building at the Main WTP.
4. Bidding services for attending meetings (pre-bid and bid opening), site visit (if necessary), answering bidder questions, bid evaluation, and recommendation of award.

**Scope of Services:**

1. Engineering services (Items 1 through 4 above) in accordance with the attached fee breakdown spreadsheet = **$5,000.00**

| | | | |
|---|---|---|---|
| **Original Engineering Design Fee:** | $22,494.00 | **Original Time:** | 197 Days |
| **Previous Revisions:** | $0.00 | **Previous Revisions:** | 0 Days |
| **This Revision:** | $5,000.00 | **This Revision:** | 30 Days |
| **Revised Fee** | $27,949.00 | **Revised Time:** | 227 Days |

| | |
|---|---|
| **Prepared by:** | **Accepted by:** |
| Chase Dickinson, P.E.<br>Project Manager<br>Eckler Engineering, Inc. | Walter Sanchez<br>Project Manager<br>Village of Palm Springs |

**Attachments:**

☒ Revision Fee Breakdown ☐ Other:

☐ Revised Schedule

Y:\Documents\Village\400-085.01 Main WTP Equipment Storage Building\Project Management\Engineering Scope Revisions\Engineering Scope Revison No. 1\W. Sanchez - Scope Revision #01.docx



*4700 RIVERSIDE DRIVE, SUITE 110*
*CORAL SPRINGS, FL 330367*
*954/510-4700*
*FAX 954/755-2741*

# VILLAGE OF PALM SPRINGS

**KIRK ROAD PIPE & MATERIAL STORAGE BUILDING AND MAIN WTP EQUIPMENT STORAGE BUILDING**
**WORK AUTHORIZATION NO. EE-U03**
**SCOPE REVISION**

DATE: February 3, 2021

*I. DESIGN PHASE LABOR*

| | TASK DESCRIPTION | PERSONNEL | | | | | | | | | | |
|---|---|---|---|---|---|---|---|---|---|---|---|---|
| | | Principal | Engineer 8 | Engineer 6 | Engineer 4 | Engineer 3 | Engineer 1 | Technician 4 | Technician 3 | Technician 2 | Resident | Administrative |
| 1 | General bid coordination and project management | | 1 | | 2 | | | | | | | |
| 2 | Specification revisions | | 1 | | 4 | | | | | | | |
| 3 | Drawing revisions | | 4 | | 4 | | | | 16 | | | |
| 4 | Bidding services (meetings, site visit, bidder questions, bid evaluation, recommendation of award) | | 1 | | 8 | | | | | | | |
| | Total Hours | 0 | 7 | 0 | 18 | 0 | 0 | 0 | 16 | 0 | 0 | 0 |
| | Rate | $205.00 | $180.00 | $154.00 | $123.00 | $107.00 | $91.00 | $121.00 | $110.00 | $92.00 | $95.00 | $70.00 |
| | Sub-Total Labor | $0.00 | $1,260.00 | $0.00 | $2,214.00 | $0.00 | $0.00 | $0.00 | $1,760.00 | $0.00 | $0.00 | $0.00 |
| | | | | | | | | | | **TOTAL LABOR** | | $5,234.00 |

*II. REIMBURSABLE EXPENSES DESIGN PHASE*

| EXPENSE ITEM | EXPENSE TYPE | UNIT | No. OF UNITS | COST PER UNIT | TOTAL COST |
|---|---|---|---|---|---|
| 1 | REPRODUCTION | | | | |
| | Half Size drawings (11"x17") | EA | 0 | $31.50 | $0.00 |
| | Full Size drawings (22"x34") | EA | 0 | $73.08 | $0.00 |
| | Specification Booklets | EA | 0 | $50.00 | $0.00 |
| 2 | PHOTOCOPIES | EA | 0 | $0.20 | $0.00 |
| 3 | PLOTTING | | | | |
| | 22 X 34 (SET UP) | EA | 0 | $3.00 | $0.00 |
| | 11 X 17 (SET UP) | EA | 0 | $3.00 | $0.00 |
| 4 | TRAVEL | | | | |
| | MILEAGE | MILE | 0 | $0.545 | $0.00 |
| | TOLLS | EA | 0 | $0.00 | $0.00 |
| 5 | SUBCONSULTANTS | | | | |
| | SURVEY | LS | 0 | $0.00 | $0.00 |
| | ELECTRICAL/I&C | LS | 0 | $0.00 | $0.00 |
| | STRUCTURAL | LS | 0 | $0.00 | $0.00 |
| | GEOTECHNICAL | LS | 0 | $0.00 | $0.00 |
| | HYDROGEOLOGIC | LS | 0 | $0.00 | $0.00 |
| | RADIO SURVEY/LICENSING | LS | 0 | $0.00 | $0.00 |
| | HVAC | LS | 0 | $0.00 | $0.00 |
| | | | | **TOTAL EXPENSES** | $0.00 |

| | |
|---|---|
| **GRAND TOTAL** | $5,234.00 |
| **USE** | $5,000.00 |

ECKLER ENGINEERING, INC.

December 4, 2019
400-085.01

Mr. Walter Sanchez
Village of Palm Springs
226 Cypress Lane
Palm Springs, FL 33461

Dear Mr. Sanchez:

Reference: Proposal for Engineering Services
Design and Construction Phases for the
Storage Building for Maintenance Equipment
VPS Project No.: 20-PW-562-01
Eckler Engineering Work Authorization No. EE-P01

Enclosed is Work Authorization No. EE-P01 outlining the engineering services required for design and services during construction for the Additional Public Works Equipment Storage Building.

Eckler Engineering proposes to provide the design phase services for the lump sum fee of $22,494.00 and the engineering services during construction on an hourly rate plus direct expenses basis not to exceed $20,818.50 without the additional authorization of the Village Council.

If this Work Authorization meets with your approval, please coordinate placing on the next available Village Council Agenda. Following Council approval, please return one executed copy and the necessary Village of Palm Springs purchase order to our office approving Authorization to Proceed.

Eckler Engineering looks forward to the opportunity of continuing to provide professional engineering services to the Village of Palm Springs on this project. If you have any questions or require additional information pertaining to this Work Authorization, please do not hesitate to contact me.

Sincerely,

Douglas K. Hammann, P.E.

Encl.

Y:\Documents\Village\400-000.BD\Task Orders\WA EE-P01 Main WTP Equipment Storage Building\WA Letter.docx



4700 RIVERSIDE DRIVE, SUITE 110
CORAL SPRINGS, FL 33067

954/510-4700
FAX 954/755-2741

**VILLAGE OF PALM SPRINGS**

**CONSULTING SERVICE WORK AUTHORIZATION**

DATE: October 24, 2019 VILLAGE RFQ. NO.: 2018R-002

WORK AUTHORIZATION NO. EE-P01 FOR CONSULTING SERVICES

TASK ORDER (PROJECT) No. 261 G/L CODE: 01441-56200

ECKLER ENGINEERING PROJECT NO.: 400-085.01

PROJECT TITLE: Storage Building for Maintenance Equipment

This Work Authorization, when executed, shall be incorporated in and shall become an integral part of the Agreement for Professional Services dated September 13, 2018 between the Village of Palm Springs ("VILLAGE"), and Eckler Engineering, Inc. ("CONSULTANT") hereafter referred to as the Agreement.

## I. PROJECT DESCRIPTION

The Village Public Works staff stores equipment and vehicles at the south end of the Village Main Water Treatment Plant site. In 2017, an open bay, 120' x 40' pre-engineered metal structure/building was constructed near the southeastern limits of the Village Main Water Treatment Plant. The 2017 structure provided covered storage area for Public Works equipment and vehicles, however, additional storage area has been requested at this time. In order to maintain access to existing Village water treatment facilities and existing Village Public Works facilities, the available area to construct additional storage is limited. CONSULTANT proposes an addition to the 2017 storage structure and a new stand-alone structure (see Attachment 7). The following general scope of work is proposed:

A. New pre-engineered metal structure/building addition (South Building) on extended concrete slabs on the northeast side of the 2017 structure.

B. New pre-engineered metal structure/building (North Building) on the south side of the wash water recovery basin.

C. New reinforced concrete building slab additions and additional concrete column foundations.

D. Site plan revisions to address impact to site drainage and paved access adjacent to the proposed storage bay additions.

E. Site restoration and other miscellaneous engineering work associated with siting the proposed buildings.

## II. SCOPE OF SERVICES

The following is a description of the services to be provided under this Task Order.

### A. DESIGN PHASE

The Design Phase will include the following services:

#### TASK D1 - PROJECT ADMINISTRATION/MANAGEMENT

This task focuses on the administration of the project including project setup, client interface and general project management and administration.

#### TASK D2 - DATA GATHERING AND PRELIMINARY COORDINATION

This task focuses on obtaining the necessary preliminary information required to prepare detailed engineering plans and specifications.

1. Visit the site and review pertinent features that may impact design and/or construction.

2. Collect existing facility's data including field conditions, access, and other information needed to complete the design.

3. Meet with appropriate VILLAGE staff to discuss the project requirements.

4. Coordination and completion of SUBCONSULTANT'S professional services for geotechnical engineering.

5. CONSULTANT shall coordinate and include survey work from the 2017 storage building project into this project.

#### TASK D3 - PRELIMINARY DESIGN REPORT

This task not required. The design conditions are currently known and defined.

#### TASK D4 - DRAWINGS AND ENGINEERING

This task consists of the engineering and the development of plans necessary to construct this project. The CONSULTANT will prepare detailed drawings for the proposed work as discussed in this task order. A tentative list of drawings to be prepared for this project is presented in ATTACHMENT 1.

#### TASK D5 - SPECIFICATION PREPARATION

1. Prepare Standard EJCDC (current VILLAGE standard) Contract Forms, Bidding Documents and Contract Conditions required for this project.

2. Prepare technical specifications required for this project in Division 1 through Division 16. These specifications, utilizing the CSI format, will be prepared and will consist of written technical descriptions of materials, equipment and construction systems, standards and workmanship required for this project as developed by CONSULTANT. A tentative list of specification sections to be prepared for this project is presented in ATTACHMENT 2.

**TASK D6 - PERMIT PREPARATION ASSISTANCE**

This task consists of the preparation of the following construction permit application submittals:

1. No regulatory permits are anticipated.

   Any additional design phase permits required beyond the above will be considered as outside the scope of this proposal.

**TASK D7 - PREPARE OPINION(S) OF PROBABLE CONSTRUCTION COST**

Prepare the 90%, 100%, and Final completion level opinion(s) of probable construction cost for new facilities and improvements proposed under this project.

**TASK D8 - BIDDING ASSISTANCE SERVICES**

This task will include work necessary to assist the VILLAGE with the bidding of the project. This work may include the following:

1. Coordinate bidding requirements with VILLAGE and prepare electronic bid documents for distribution by the VILLAGE Clerk's office. Bidding documents shall be in .pdf format on CD or electronic submittal.

2. Assist VILLAGE Clerk's Office with the coordination of the bidding documents, the advertisement for bids, respond to communications from bidders, and assist with preparation of documents for issuance of addenda information as required.

3. Attend the prebid meeting and prepare minutes for submittal to VILLAGE Clerk's office. VILLAGE Clerk's Office shall publish final Prebid Meeting Minutes.

4. Attend the bid opening and tabulate the bids provided by interested contractors.

**TASK D9 - BID EVALUATION AND RECOMMENDATION OF AWARD ASSISTANCE**

This task shall consist of the review and evaluation of the bids to make a recommendation of a bidder for award of a contract. A recommendation of award letter shall be prepared and submitted to VILLAGE.

### TASK D10 - SUBMIT AND REVIEW (QUALITY CONTROL)

The CONSULTANT will make the following submittals at various completion levels of this project for the purpose of VILLAGE's review and comment for coordination and quality control. A review meeting will be requested following each submittal to discuss and receive comments from the VILLAGE. The VILLAGE's comments shall be incorporated into revisions prior to the next subsequent quality control submittal. Quality control submittals for this project are anticipated at the following completion levels:

1. 90% Drawings and Specifications

2. 100% Drawings and Specifications

3. Final Drawings and Specifications

The CONSULTANT will incorporate the agreed-upon revisions made by the VILLAGE.

A total of three (3) meetings with the VILLAGE is the level of effort for this Task.

## B. ENGINEERING SERVICES DURING CONSTRUCTION

### TASK C1 – PROJECT ADMINISTRATION/MANAGEMENT

This task focuses on the administration of the project including project setup, client interface and general project management and administration.

### TASK C2 - PRECONSTRUCTION ACTIVITIES PRIOR TO NOTICE TO PROCEED

After issuance of a Notice of Award by VILLAGE, assist in the preparation and signing of the Contract Documents. The CONSULTANT will also undertake other preconstruction activities which include coordinating, attending and preparing minutes of the preconstruction conference meeting and assisting the Contractor in finalizing the permits required for the construction of this project by providing the required number of signed/sealed drawing sets and answering questions from the local Building Department.

### TASK C3 - CONSULT AND ADVISE

Provide technical advice and assistance to VILLAGE during the construction period and provide necessary interpretations and clarifications of the Contract Documents as required by VILLAGE or Contractor by responding to RFI's or other documentation. Evaluation of and response to an estimated five (5) RFI's is the level of effort estimated for this task.

## TASK C4 - REVIEW SHOP DRAWINGS

Review Shop Drawings and samples, the results of tests and inspections, and other data submitted by the Contractor in accordance with the Contract Documents. A total of ten (10) submittals is the estimated basis for this item's budget.

## TASK C5 - REVIEW PAY REQUESTS AND SCHEDULES

Review estimated three (3) monthly pay requests and make recommendations for payment to VILLAGE. Monthly pay requests will be reviewed in the field and an agreement reached between the Contractor, VILLAGE's project representative(s), and the CONSULTANT prior to formal submittal to VILLAGE for payment. Review the Contractor's preliminary and monthly progress schedules through completion.

## TASK C6 - PERFORM PERIODIC AND MILESTONE INSPECTIONS

CONSULTANT will make periodic site visits at intervals appropriate to the various stages of construction to observe the work, determine conformity with the plans and specifications, and compliance with the construction permits. It is anticipated that there will be a total of six (6) visits.

Perform inspections to determine that the project has achieved substantial completion and readiness for final acceptance and that the work has been completed in general conformance with the Contract Documents to certify completion of construction to permitting agencies, where applicable. Two (2) such site visits are anticipated.

## TASK C7 - PROGRESS MEETINGS

This task not required.

## TASK C8 - CONTRACT MODIFICATIONS

Develop the necessary data, notes, and clarification drawings required to prepare contract modifications to reflect adjustments to the construction project. One (1) contract modification incorporating a total of four (4) items, is the estimated basis for this budget item.

## TASK C9 - PROJECT CLOSEOUT

Review the Contractor's record drawing information which shows the work as it was constructed. Prepare for VILLAGE record drawings and prints showing those changes made during the construction process based upon information provided by the Contractor as follows:

1. CONSULTANT shall prepare record drawings based on Contractor's field data.

2. CONSULTANT shall submit record documents to VILLAGE.

3. CONSULTANT shall attend the final project reconciliation meetings with VILLAGE and CONTRACTOR.

## TASK C10 - REGULATORY AGENCY DOCUMENTATION AND PROJECT CLOSEOUT SUBMITTALS

Project services in connection with preparing acknowledgment of Final Completion construction submittals with record drawings to the following agencies.

1. Palm Springs Building Department

## TASK C11 - SPECIAL SERVICES

The CONSULTANT shall provide special services during construction consisting of the following items:

Resident Services

To monitor that project is constructed in complete conformance with the Contract Documents.

Services which will be provided by the CONSULTANT's resident project representative will consist of the following:

Make periodic on-site field observations of the Contractor's performance. The limits of the authority of the on-site representative are as defined within the Construction Contract Documents.

1. Observe any tests and review the results of tests required of the Contractor by the Contract Documents.

2. Observe the placement of reinforcing steel and all concrete pours. Observe the construction of all piping and equipment placement.

3. Assist with commissioning, startup and check out the operation of all new equipment and control systems.

4. Assist in the development of punch lists in conjunction with the milestone inspections to determine if the project has achieved Substantial and Final Completion and that the work has been completed in general conformance with the Contract Documents.

5. In order to estimate the efforts of the CONSULTANT's project representative, it is anticipated that a person would need to visit the project site ten (10) times, approximately 3 hours per visit.

## III. DELIVERABLES

Project deliverables shall be in accordance with Attachment 3.

## IV. SCHEDULE

Upon receipt of Notice-To-Proceed the CONSULTANT will complete the services identified in this Work Authorization within the schedule outlined in Attachment 4.

## V. COMPENSATION AND PAYMENT

The CONSULTANT will perform the tasks as outlined in the scope of services for the fees as outlined below in Tables 1 and 2 and further detailed in Attachments 5 and 6.

### A. DESIGN PHASE

1. For services described in Part II. A. - Design Phase, Tasks D1 through D10, the lump sum fee of **$22,494.00**.

**TABLE 1**
**DESIGN PHASE**
**BUDGET SUMMARY**

| Description | Total |
|---|---|
| D1 - Project Administration / Management | $2,708.00 |
| D2 - Data Gathering and Preliminary Coordination | $1,354.00 |
| D3 - Not Used | $0.00 |
| D4 - Drawings and Engineering | $6,770.00 |
| D5 - Specification Preparation | $2,002.00 |
| D6 – Permit Preparation Assistance | $0.00 |
| D7 - Prepare Opinions of Probable Construction Cost | $1,188.00 |
| D8 - Bidding Assistance Services | $1,856.00 |
| D9 - Bid Evaluation and Recommendation of Award | $964.00 |
| D10 - Submit and Review (Quality Control) | $2,449.00 |
| Reimbursable Expenses | $3,203.00 |
| **TOTAL LUMP SUM FEE** | **$22,494.00** |

### B. CONSTRUCTION PHASE

1. For services described in Part II. B. - Construction Phase, Tasks C1 through C11, not to exceed fee of **$20,818.50.**

**TABLE 2**
**ENGINEERING SERVICES DURING CONSTRUCTION**
**BUDGET SUMMARY**

| Description | Total |
|---|---|
| C-1 Project Administration / Management | $2,208.00 |
| C-2 Preconstruction Activities Prior to Notice to Proceed | $1,648.00 |
| C-3 Consult and Advise | $2,215.00 |
| C-4 Review Shop Drawings | $2,030.00 |
| C-5 Review Pay Requests & Schedules | $1,113.00 |
| C-6 Perform Periodic & Milestone Inspections | $3,328.00 |
| C-7 Not Used | $0.00 |
| C-8 Contract Modifications | $1,032.00 |
| C-9 Project Closeout | $4,044.50 |
| C-10 Not Used | $0.00 |
| C-11 Special Services | $3,200.00 |
| Reimbursable Expenses | $0.00 |
| **TOTAL NOT-TO-EXCEED FEE** | **$20,818.50** |

## VI. ASSUMPTIONS

This Work Authorization does not include the provision of the following items:

A. Payment of permit fees.

B. Any expert witness or testimony services.

C. Topographic surveying services. Topographic survey completed for the 2017 building project will be utilized for completion of this Work Authorization.

D. Stormwater Management Plan will not be prepared for this site.

E. Services not specifically indicated in this Work Authorization.

This Work Authorization assumes the following data or assistance will be provided by VILLAGE:

A. Attendance at project meetings.

B. General project review, where required.

C. Provide pertinent project data and information available from VILLAGE when requested by CONSULTANT.

D. Facility access and other project related information requested by CONSULTANT.

E. VILLAGE Project Representative Services (Part time when CONSULTANT's representative is not on site.)

Services which will be provided by the VILLAGE resident project representative will include the following:

1. Monitor that project is constructed in conformance with the Contract Documents.

2. Make periodic on-site field observations of the Contractor's performance. The limits of the authority of the on-site representative are as defined within the Contract Documents.
3. Observe field tests and review the results of tests required by the Contract Documents.
4. Assist in the development of punch lists in conjunction with the milestone inspections to determine if the project has achieved Substantial and Final Completion and that the work has been completed in general conformance with the Contract Documents.
5. Provide daily reports of Contractor activity to the CONSULTANT on a form provided by the CONSULTANT.
6. Provide photographs of the work during construction showing typical construction progress.
7. Keep the CONSULTANT informed of any changes which need to be made and assist CONSULTANT with the change decision.
8. Be present at all required times for permit compliance.

## VII. AGREEMENT REFERENCE

The work authorized under this Work Authorization shall be performed under the terms and conditions described within the Professional Services Agreement dated September 13, 2018, by and between the Village of Palm Springs ("VILLAGE") and Eckler Engineering, Inc. ("CONSULTANT"). Compensation shall not exceed the hourly rates currently in effect under this Agreement.

**ECKLER ENGINEERING, INC.**

By: _____

Print Name: Douglas K. Hammann, P.E.

Title: President

**VILLAGE OF PALM SPRINGS**

By: _____
Mayor Ted Smith
Kimberly Wynn
Kimberly Wynn

Date: January 9, 2020

VILLAGE OF PALM SPRINGS SEAL 1957 FLORIDA

Village Attorney's Office

Approved as to form and legality

By: _____

(Required if over $25,000)

## ATTACHMENT 1

## WORK AUTHORIZATION NUMBER EE-P01
## STORAGE BUILDING FOR MAINTENANCE EQUIPMENT
## TENTATIVE LIST OF DRAWINGS

| Drawing Sheet No. | Title |
|---|---|
| **General** | |
| | Cover sheet |
| G-1 | Project Location Map & Index to Drawings |
| G-2 | General Notes and Legends |
| G-3 | Abbreviations |
| G-4 | Design Criteria |
| G-5, 6, 7, 8 | Specifications |
| **Survey** | |
| SUR-1 | Site Survey and Soil Boring Locations |
| **Civil** | |
| C-1 | Demolition Plan |
| C-2 | Overall Site Plan |
| C-3, 4 | Specific Site Plans |
| C-5 | Specific Details - Civil |
| CD-1, 2 | Standard Details – Civil |
| **Structural** | |
| S-1, 2 | Foundation/Floor Plans |
| S-3, 4 | Structural Framing Plans |
| S-5, 6 | Structural Elevations |
| S-7 | Specific Details - Structural |
| SD-1 | Standard Details – Structural |

(Remainder of page left blank intentionally.)

## ATTACHMENT 2

## WORK AUTHORIZATION NUMBER EE-P01
## STORAGE BUILDING FOR MAINTENANCE EQUIPMENT
## TENTATIVE LIST OF SPECIFICATIONS

| SECTION NO. | TITLE |
|---|---|
| **PART 1** | **BIDDING REQUIREMENTS** |
| 00111 | Advertisement for Bids |
| 00200 | Instructions to Bidders |
| 00400 | Bid Submission Checklist |
| 00410 | Bid Form |
| 00430 | Bid Bond (Penal Sum) |
| 00440 | Florida Trench Safety Act Certification |
| 00451 | Qualification Statement |
| 00452 | Disputes |
| 00453 | Noncollusion Affidavit |
| 00454 | Drug-Free Workplace Certificate |
| 00455 | Public Entity Crimes |
| **PART 2** | **CONTRACT FORMS** |
| 00510 | Notice of Award |
| 00520 | Agreement |
| 00550 | Notice to Proceed |
| 00610 | Performance Bond |
| 00615 | Payment Bond |
| **PART 3** | **CONTRACT CONDITIONS** |
| 00700 | General Conditions |
| 00800 | Supplementary Conditions |
| **PART 4** | **MISCELLANEOUS DOCUMENTS** |
| 00620 | Contractor's Application for Payment |
| 00625 | Certificate of Substantial Completion |
| 00940 | Work Change Directive |
| 00941 | Change Order |
| 00942 | Field Order |
| **PART 5** | **SPECIFICATIONS** |

Technical specifications will be included in Drawing Set.

## ATTACHMENT 3

## WORK AUTHORIZATION NUMBER EE-P01
## STORAGE BUILDING FOR MAINTENANCE EQUIPMENT

## LIST OF PROJECT DELIVERABLES

**DESIGN PHASE**

A. 90% Design Submittal

1. One (1) set of 11" x 17" Drawings, 90% complete.
2. One (1) Specification Booklet.
3. 90% Completion Estimate of Probable Construction Cost.
4. Updated Project Schedule.

(Electronic submittal process shall be used. Hard copy documents available upon request.)

B. 100% Design Submittal

1. One (1) set of 11" x 17" Drawings, 100% complete.
2. One (1) Specification Booklet.
3. 100% Completion Estimate of Probable Construction Cost.
4. Updated Project Schedule.

(Electronic submittal process shall be used. Hard copy documents available upon request.)

C. Final Design Submittal

1. One (1) set of 11" x 17" Drawings, 100% complete.
2. One (1) Specification Booklet.
3. Final Completion Estimate of Probable Construction Cost.
4. Updated Project Schedule.

(Electronic submittal process shall be used. Hard copy documents available upon request.)

D. Bidding (Final) Coordination Submittal

1. One (1) set of 11" x 17" Drawings (Final).

2. One (1) Specification Booklet.

3. One (1) Final Completion Estimate of Probable Construction Cost.

4. Updated Project Schedule.

(Electronic submittal process shall be used. Hard copy documents available upon request.)

**BIDDING SERVICES**

A. Pre-Bid

1. Pre-bid Meeting Minutes Information.

2. Addenda Information, as required, to the VILLAGE.

B. Post Bid

1. Bid Tabulation.

2. Recommendation of Award Letter.

3. Contractor Notice of Tentative Award.

**CONSTRUCTION PHASE**

A. Pre-Construction

1. Three (3) sets of 22" x 34" signed/sealed drawings and specifications for Building Permit Submittal.

2. Three (3) sets of drawings (11" x 17") and specifications for VILLAGE's use during construction.

3. Three (3) sets of drawings (11" x 17") and specifications for CONTRACTOR's use during construction.

4. Pre-construction conference meeting agenda and minutes.

B. Shop Drawings

1. Electronic copies of accepted and final shop drawings.

C. Construction Inspection

1. Site visit reports will be provided for each site visit in accordance with Task(s) C6 and C11.

D. Progress Meetings

1. N/A

E. Contract Modifications

1. Four (4) copies of all completed contract modifications.

F. Pay Requests

1. Copies of reviewed and approved partial and final pay request applications.

G. Record Drawings and Project Closeout

1. Two (2) sets of record drawings.

2. Two (2) CD's with record drawings in .pdf and ACAD (2016 Civil 3D) formats.

H. Commissioning and Startup Reports.

1. N/A

(Remainder of page left blank intentionally.)

## ATTACHMENT 4

## WORK AUTHORIZATION NUMBER EE-P01
## STORAGE BUILDING FOR MAINTENANCE EQUIPMENT

## PRELIMINARY PROJECT SCHEDULE

| Activity | Duration (Days) | Cumulative Time (Days) |
|---|---|---|
| Authorization to Proceed | 0 | 0 |
| Preliminary Coordination internally and with VILLAGE | 7 | 7 |
| Project Site Assessment and Data Gathering | 30 | 37 |
| Submit Plans and Specifications (90%) | 30 | 67 |
| Receive VILLAGE Review Comments* | 14 | 81 |
| Submit Plans and Specifications (100%) | 14 | 95 |
| Receive VILLAGE Review Comments* | 14 | 109 |
| Submit Plans and Specifications (Final Submittal) | 14 | 123 |
| Receive Final VILLAGE Review Comments | 7 | 130 |
| Regulatory Permitting | N/A | - |
| Prepare Bid Documents and Bidding Coordination with VILLAGE* | 14 | 137 |
| Bidding and Contract Award Phase* | 60 | 197 |
| Construction (Final Completion) | 150 | 347 |
| Project Closeout | 14 | 361 |

* The schedule is based upon conducting a review meeting within 14 calendar days after the Village receives the design submittal. All review comments shall be provided to Consultant within 14 calendar days after the Village receives the submittal. An adjustment to the overall schedule will be required in the event the review meeting takes longer to be conducted and/or obtaining comments takes longer to receive.

Detailed schedule will be provided upon receipt of authorization to proceed and will include specific submittal dated.

# VILLAGE OF PALM SPRINGS

**STORAGE BUILDING FOR MAINTENANCE EQUIPMENT**
**WORK AUTHORIZATION NO. EE-P01**
**ATTACHMENT 5**

DATE: December 4, 2019

*I. DESIGN PHASE*

| | TASK DESCRIPTION | PERSONNEL | | | | | | | | | | | |
|---|---|---|---|---|---|---|---|---|---|---|---|---|---|
| | | Principal | Engineer 8 | Engineer 6 | Engineer 4 | Engineer 3 | Engineer 1 | Technician 4 | Technician 3 | Technician 2 | Resident | Administrative | |
| D1 | Project Administration / Management | | 4 | 7 | | | | | | | | 13 | $2,708.00 |
| D2 | Data Gathering and Preliminary Coordination | | | 2 | | | 6 | | 2 | | | 4 | $1,354.00 |
| D3 | Not Used | | | | | | | | | | | | $0.00 |
| D4 | Drawings and Engineering | | | 10 | | | 10 | | 38 | | | 2 | $6,770.00 |
| D5 | Specification Prepararion | | | 6 | | | 8 | | | | | 5 | $2,002.00 |
| D6 | Permit Preparation Assistance | | | 0 | | | 0 | | | | | 0 | $0.00 |
| D7 | Prepare Opinions of Probable Construction Cost | | 1 | 3 | | | 6 | | | | | | $1,188.00 |
| D8 | Bidding Assistance Services | | 3 | 6 | | | 2 | | | | | 3 | $1,856.00 |
| D9 | Bid Evaluation and Recommendation of Award | | 1 | 3 | | | 2 | | | | | 2 | $964.00 |
| D10 | Submit and Review (Quality Control) | | 2 | 9 | | | 3 | | 2 | | | 3 | $2,449.00 |
| D11 | Not Used | | | | | | | | | | | | $0.00 |
| D12 | Not Used | | | | | | | | | | | | $0.00 |
| | Total Hours | 0 | 11 | 46 | 0 | 0 | 37 | 0 | 42 | 0 | 0 | 32 | |
| | Rate | $205.00 | $180.00 | $154.00 | $123.00 | $107.00 | $91.00 | $121.00 | $110.00 | $92.00 | $95.00 | $70.00 | |
| | Sub-Total Labor | $0.00 | $1,980.00 | $7,084.00 | $0.00 | $0.00 | $3,367.00 | $0.00 | $4,620.00 | $0.00 | $0.00 | $2,240.00 | |
| | | | | | | | | | TOTAL DESIGN PHASE LABOR | | | $19,291.00 | $19,291.00 |

*II. REIMBURSABLE EXPENSES DESIGN PHASE*

| EXPENSE ITEM | EXPENSE TYPE | UNIT | NO. OF UNITS | COST PER UNIT | TOTAL COST |
|---|---|---|---|---|---|
| 1 | REPRODUCTION | | | | |
| | Half Size drawings (11"x17") | EA | 0 | $9.50 | $0.00 |
| | Full Size drawings (22"x34") | EA | 0 | $21.85 | $0.00 |
| | Specification Booklets | EA | 0 | $4.00 | $0.00 |
| | Prepare CD's (Bid Documents) | EA | 0 | $10.00 | $0.00 |
| 2 | PHOTOCOPIES | EA | 0 | $0.20 | $0.00 |
| 3 | PLOTTING | | | | |
| | 22 X 34 (SET UP) | EA | 19 | $3.00 | $57.00 |
| | 11 X 17 (SET UP) | EA | 57 | $3.00 | $171.00 |
| 4 | TRAVEL | | | | |
| | MILEAGE | MILE | 0 | $0.585 | $0.00 |
| | TOLLS | EA | 0 | $3.30 | $0.00 |
| 5 | SUBCONSULTANTS | | | | |
| | SURVEY | LS | 0 | $0.00 | $0.00 |
| | ELECTRICAL | LS | 0 | $0.00 | $0.00 |
| | STRUCTURAL | LS | 1 | $1,000.00 | $1,000.00 |
| | GEOTECHNICAL | LS | 1 | $1,975.00 | $1,975.00 |
| | HYDROGEOLOGIC | LS | 0 | $0.00 | $0.00 |
| | PERMIT FEES | LS | 0 | $0.00 | $0.00 |
| | SOFT DIGS | LS | 0 | $0.00 | $0.00 |
| | | | | TOTAL DESIGN PHASE EXPENSES | $3,203.00 |

| | |
|---|---|
| **GRAND TOTAL** | **$22,494.00** |
| **USE** | **$22,494.00** |

# VILLAGE OF PALM SPRINGS

**STORAGE BUILDING FOR MAINTENANCE EQUIPMENT**
**WORK AUTHORIZATION NO. EE-P01**
**ATTACHMENT 6**

*I. ENGINEERING SERVICES DURING CONSTRUCTION*

*DATE:* December 4, 2019

| | TASK DESCRIPTION | PERSONNEL | | | | | | | | | | |
|---|---|---|---|---|---|---|---|---|---|---|---|---|
| | | Principal | Engineer 8 | Engineer 6 | Engineer 4 | Engineer 3 | Engineer 1 | Technician 4 | Technician 3 | Technician 2 | Resident | Administrative | |
| C1 | Project Administration/Management | | 2 | 7 | | | | | | | | 11 | $2,208.00 |
| C2 | Preconstruction Activities Prior to Notice to Proceed | | | 6 | | | 4 | | 2 | | | 2 | $1,648.00 |
| C3 | Consult and Advise | | 2 | 5 | | | 10 | | | | | 2.5 | $2,215.00 |
| C4 | Review Shop Drawings | | | 5 | | | 10 | | | | | 5 | $2,030.00 |
| C5 | Review Pay Requests and Schedules | | | 3 | | | 6 | | | | | 1.5 | $1,113.00 |
| C6 | Perform Periodic and Milestone Inspections | | 2 | 8 | | | 16 | | | | | 4 | $3,328.00 |
| C7 | Not Used | | | | | | | | | | | | $0.00 |
| C8 | Contract Modifications | | | 2 | | | 4 | | 2 | | | 2 | $1,032.00 |
| C9 | Project Closeout | | 1 | 5 | | | 9.5 | | 19 | | | 2 | $4,044.50 |
| C10 | Not Used | | | | | | | | | | | | $0.00 |
| C11 | Special Services | | | | | | | | | | 30 | 5 | $3,200.00 |
| C12 | Not Used | | | | | | | | | | | | $0.00 |
| | Total Hours | 0 | 7 | 41 | 0 | 0 | 59.5 | 0 | 23 | 0 | 30 | 35 | |
| | Rate | $205.00 | $180.00 | $154.00 | $123.00 | $107.00 | $91.00 | $121.00 | $110.00 | $92.00 | $95.00 | $70.00 | |
| | Sub-Total Labor | $0.00 | $1,260.00 | $6,314.00 | $0.00 | $0.00 | $5,414.50 | $0.00 | $2,530.00 | $0.00 | $2,850.00 | $2,450.00 | |
| | | | | | | | | | TOTAL LABOR | | $20,818.50 | | $20,818.50 |

*II. REIMBURSABLE EXPENSES*

| EXPENSE ITEM | EXPENSE TYPE | UNIT | No. OF UNITS | COST PER UNIT | TOTAL COST |
|---|---|---|---|---|---|
| 1 | REPRODUCTION | | | | |
| | Half Size Drawings (11" x 17") | EA | 0 | $9.50 | $0.00 |
| | Full Size Drawings (22" x 34") | EA | 0 | $21.85 | $0.00 |
| | Specification Booklets | EA | 0 | $5.00 | $0.00 |
| | Record Document CD's | EA | 0 | $10.00 | $0.00 |
| 2 | PHOTOCOPIES | EA | 0 | $0.25 | $0.00 |
| | PLOTTING | | | | |
| 3 | 22 X 34 (SET UP ) | EA | 0 | $15.00 | $0.00 |
| | 11 X 17 (SET UP) | EA | 0 | $3.00 | $0.00 |
| | TRAVEL | | | | |
| 4 | MILEAGE | MILE | 0 | $0.585 | $0.00 |
| | TOLLS | EA | 0 | $3.30 | $0.00 |
| | SUBCONSULTANTS | | | | |
| | SURVEY | LS | 0 | $0.00 | $0.00 |
| | ELECTRICAL | LS | 0 | $0.00 | $0.00 |
| 5 | STRUCTURAL | LS | 0 | $0.00 | $0.00 |
| | GEOTECHNICAL | LS | 0 | $0.00 | $0.00 |
| | ARCHITECTURAL | LS | 0 | $0.00 | $0.00 |
| | HVAC | LS | 0 | $0.00 | $0.00 |
| | | | | TOTAL EXPENSES | $0.00 |

| | |
|---|---|
| **GRAND TOTAL** | **$20,818.50** |
| **USE** | **$20,818.50** |

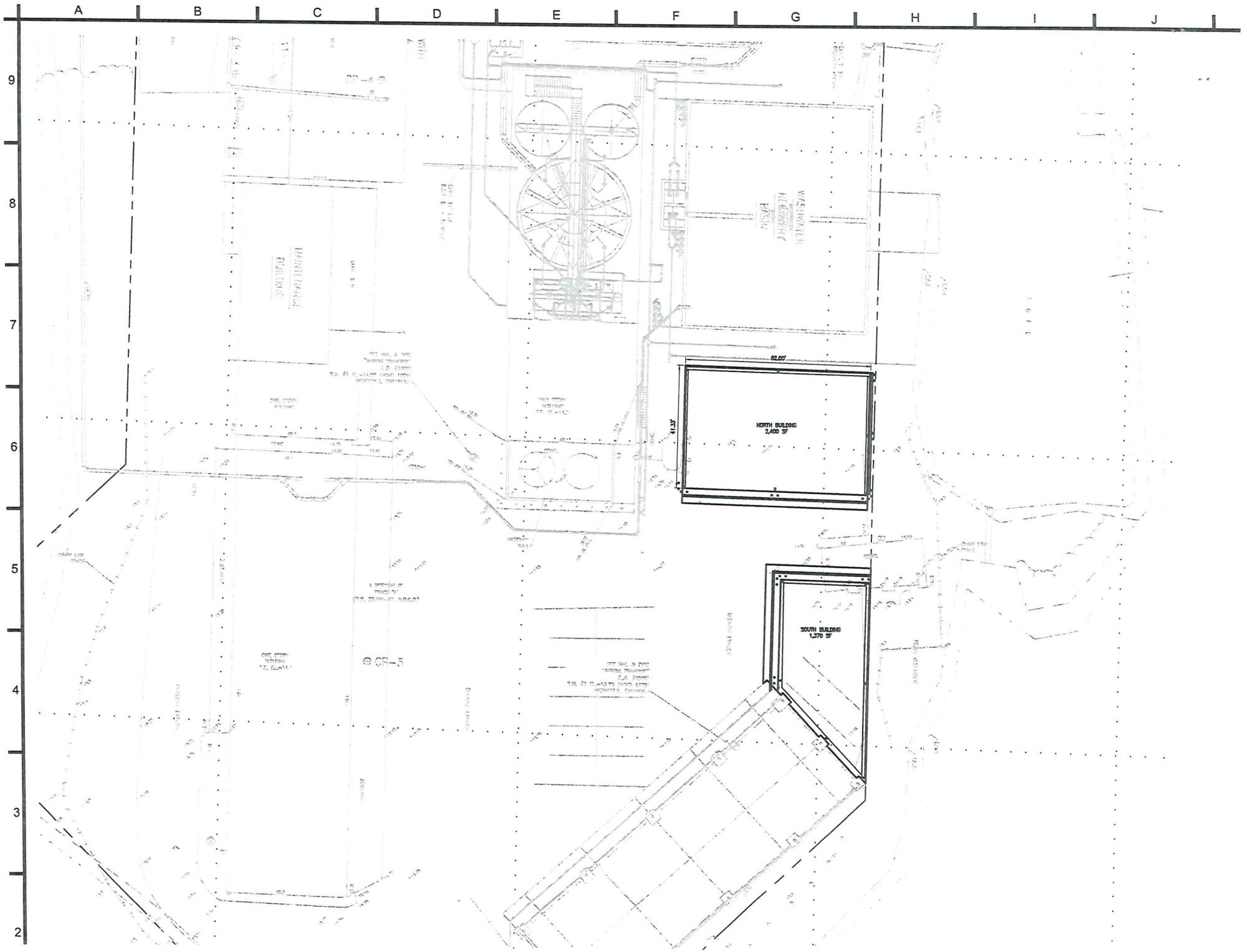
A
B
C
D
E
F
G
H
I
J
9
8
7
6
5
4
3
2
NORTH BUILDING
2,400 SF
SOUTH BUILDING
1,370 SF

Nutting Engineers
of Florida Inc. | Established 1967
*Your Project is Our Commitment*

Geotechnical & Construction Materials
Engineering, Testing, & Inspection
Environmental Services

Offices throughout the state of Florida

www.nuttingengineers.com info@nuttingengineers.com

*Palm Beach County SBE*
*Miami Dade County Tier 2 CBE*
*SFWMD SBE*
*Small Business Administration SBE*
*for Federal Projects*

August 28, 2019

Eckler Engineering, Inc.
Attn: Mr. Doug Hammann, P.E.
4700 Riverside Drive, Suite 110
Coral Springs, FL 33067
Phone: 954-510-4700/ Email: dhammann@ecklerengineering.com

Re: Proposal/Agreement for Geotechnical Exploration Services
Village of Palm Springs Public Works Department
Equipment Storage Building
360 Davis Road
Palm Springs, FL

Dear Mr. Hammann:

Nutting Engineers of Florida, Inc. (NE) is pleased to present this proposal/agreement for performing geotechnical engineering services at the referenced project.

Per your email dated August 27, 2019, we understand that plans for this project include constructing a pre-engineered equipment storage building at the referenced site. At the time of this proposal a site plan was not available; however, we anticipate receiving one prior to the initiation of on-site activities. Based on your request for proposal and our understanding of the project, we propose the following scope of work and fee schedule.

**SCOPE OF WORK**

We propose to perform two Standard Penetration Test (SPT) borings in general accordance with ASTM D-1586 specifications to a depth of 20 feet in the area of the proposed building. In order to perform the test borings, the existing concrete slab will need to be cored through. The holes will be patched after the borings are completed.

At the completion of the on-site work, the soil samples will be returned to our laboratory. We will provide an engineering report including a description of our findings and general site preparation and foundation design recommendations for support of the proposed construction. In order to provide information concerning the engineering properties of the soils encountered, it is anticipated that tests may be performed to determine natural water content, organic content, and sieve analysis on representative soil samples collected from the site. The engineering report will include graphic logs of the test borings and a test boring location plan. We assume the site is accessible to truck mounted drilling equipment and that underground utilities will be cleared by others prior to our performing the on-site work.

**FEE SCHEDULE**

The above-indicated scope of work will be performed for an estimated cost of $1,975.00 based on the following rates and quantities:

| | | |
|---|---|---|
| Tech. site visit, boring layout, utility clearance | Lump Sum | $100.00 |
| Mobilization of equipment/crew | 1 @ $150.00 | $150.00 |
| SPT borings* (truck mounted drill rig) | Lump Sum | $500.00 (min) |
| Casing | Lump Sum | $200.00 |
| Concrete slab coring/ patching | Lump Sum | $150.00 |
| Soil classification/ laboratory analysis | Lump Sum | $50.00 |
| Project Engineer | Lump Sum | $650.00 |
| Principal Engineer | Lump Sum | $125.00 |
| Clerical/ Admin. for report preparation | Lump Sum | $50.00 |

*If loose or deleterious soil is encountered it may be necessary to extend the soil boring(s).

Additional requested and authorized services beyond those described above will be provided at customary unit rates with expenses at cost +20%.

**Construction Materials Testing (as may be required):**
Pile monitoring - $65.00/hour
Proctors - $150.00/test
Density tests - $25.00/test (5 min/trip)
Concrete cylinders - $85.00/set
Trip charge - $50.00/ea. (if required)
Bearing capacity completion letter - $150.00
Clerical/ Admin. - $50.00/hour
Principal Engineer - $125.00/hour

Once we receive the executed/ signed proposal, project scheduling will commence. The on-site work should take approximately one business day to complete. The geotechnical report should be available within approximately 12 - 15 business days after the on-site work is completed.

NE has been offering geotechnical engineering, environmental sciences, materials testing, and structural inspection services for over 50 years in South Florida and the Treasure Coast during which time we have worked on many similar projects. Our commitment to practical, cost effective solutions supported by responsive client services distinguishes our firm and enables us to solve your most demanding technical challenges. Another value-added component NE brings to your project is our staff of experienced professionals including geotechnical engineers, environmental specialists, field personnel who are certified and have been trained to provide a wide range of consulting services, and our dedicated administrative staff.

Our laboratory is checked annually by the Construction Materials Engineering Council (CMEC) and is certified to perform geotechnical engineering and materials testing services for the Florida Department of Transportation (FDOT).

Our sister company, Nutting Environmental of Florida, Inc. (NEF), can assist in your environmental needs. For thirty years, NEF has performed a wide variety of environmental consulting services throughout Florida including Phase I and II environmental site assessments, storage tank removal and tank closure assessments, contamination assessments, design and implementation of remedial action plans (RAP), groundwater monitoring for solid waste and Hazmat permit requirements, assistance with dewatering permitting and much more. NEF can be reached 561-732-7200.

Thank you for providing us the opportunity to present this proposal/agreement. We look forward to working with you on this and future projects.

Respectfully submitted,
**NUTTING ENGINEERS OF FLORIDA, INC.**

Scott Ersland
Division Manager

Richard C. Wohlfarth, P.E.
Principal/ Director of Engineering

Reports and invoices will be addressed to the client as listed below unless other instructions are provided in writing with this executed proposal. The undersigned, as an authorized representative of the entity listed below, approves this proposal and agrees to be bound by the terms and conditions contained in this proposal. Deposit amounts are collected at time of written authorization to proceed. If you are a first-time client, we request that the balance due for these services be paid at the time of report completion. Once your account is established, our terms are net 30 days. Any invoices over 30 days will be assessed a 1 1/2 percent service charge per month until paid in full.

**PLEASE ENTER INFORMATION LEGIBLY BELOW SO IT CAN BE UTILIZED FOR PROJECT SET-UP:**

SIGNATURE: _____ DATE: _____

PRINT NAME: _____ TITLE: _____

COMPANY NAME: _____

ADDRESS: _____

PHONE: _____ FAX: _____

EMAIL: _____

Prop Equip Storage Bldg Eckler Engr 360 Davis Rd Palm Spgs geo 8-28-19

**General Terms and Conditions**

For the purpose of this project, the addressee of this proposal will be known as the Client. The client is expected to furnish NUTTING ENGINEERS OF FLORIDA, INC. ("NE"), with accurate information including sketch of survey and/or site plan, construction drawings/specifications as appropriate, details of proposed construction including the proposed structural system and loads or existing construction problem information and site accessibility information as appropriate. Other information requirements may be detailed in the enclosed proposal. IF ANY CONDITIONS CHANGE such as building layout, loading, project specifications/design, or unusual site conditions are observed, NE should be notified immediately in writing about the changed condition for possible review and comment. Should the Client wish to impose other conditions and requirements beyond those contained in this proposal such as in a separate contract, we reserve the option to modify contract language, fee amounts, to remove our proposal from consideration or other measures as may be indicated.
Delivery – Scheduled upon receipt of written authorization to proceed and deposit unless other arrangements are agreed to in writing. Additional report copies can be provided for a nominal fee to the Client. NE will exercise appropriate measures to ensure project completion within a reasonable time frame subject to existing workloads. However, NE will not be held responsible for unavailability of necessary project data and site access within the time frame agreed upon for the investigation. Project delivery may be delayed if the ENTIRE signed proposal and deposit are not received in a timely manner. The ENTIRE signed quotation should be returned along with the requested project information. This unsigned proposal is valid for 60 days.

**Payment** - No deposit required with signed agreement. Balance due upon completion of report. Directing NE to proceed with the work shall constitute acceptance of the terms of NE's proposal and these General Terms and Conditions. Interest at the rate of 18% per annum or the highest rate allowable by law whichever is less, will be added to all amounts not paid within 30 days after date of invoice. All attorney fees and expenses associated with collection of past due invoices will be paid by Client.

**Insurance** – NE maintains Workers' Compensation and Employer's Liability Insurance in conformance with state law. In addition, we maintain Comprehensive General Liability Insurance and Automobile Liability Insurance with bodily injury limits of $1,000,000.00 and property damage limits of $1,000,000.00. A certificate of insurance can be supplied evidencing such coverage which contains a clause providing that fifteen days written notice be given prior to cancellation.

**Right-of-Entry** - Unless otherwise agreed, Client will furnish right-of-entry on the property for NE to make the planned borings, surveys, and/or explorations. NE will not be responsible for removing fences, earth berms, vegetation or other obstructions for purposes of our investigation. NE will take reasonable precautions to minimize damage to the property caused by its equipment and sampling procedures, but the cost of restoration or damage which may result from the planned operations is not included in the contracted amount. If Client desires to restore the property to its former condition, NE will accomplish this and add the cost to its fee. Client agrees to waive all claims arising from or related to the failure to provide NE with proper access to conduct its work.

**Damage to Existing Man-made Objects** - It shall be the responsibility of the Owner or his duly authorized representative to disclose the presence and accurate location of all hidden or obscure man-made objects relative to routes of access, field tests, sampling, or boring locations. When cautioned, advised or given data in writing that reveal the presence or potential presence of underground or over-ground obstructions, such as utilities, septic tanks, etc., NE will give special instructions to its field personnel. In addition, Client waives any claim against NE arising from damage to existing man-made objects.

**Warranty and Limitation of Liability** - NE shall perform services for Client in a professional manner, using that degree of care and skill ordinarily exercised by and consistent with the standards of competent consultants practicing in the same or a similar locality as the project. In the event any portion of the services fails to comply with this warranty obligation and NE is promptly notified in writing prior to one year after completion of such portion of the services, NE will re-perform such portion of the services, or if re-performance is impracticable, NE will refund the amount of compensation paid to NE for such portion of the services. This warranty is in lieu of all other warranties. No other warranty, expressed or implied, including warranties of merchantability and fitness for a particular purpose is made or intended by the proposal for consulting services, by furnishing an oral response of the findings made or by any representations made regarding the services included in this agreement. In no event shall NE or any of its professional employees be liable for any special, indirect, incidental or consequential loss or damages, including but not limited to impact and delay claims. The remedies set forth herein are exclusive and the total liability of consultant whether in contract, tort (including negligence whether sole or concurrent), or otherwise arising out of, connected with or resulting from the services provided pursuant to this Agreement shall not exceed the total fees paid by Client or $50,000.00, whichever is greater. At additional cost, Client may obtain a higher limit prior to commencement of services.

**PURSUANT TO §558.0035, FLORIDA STATUTES, NE'S INDIVIDUAL EMPLOYEES AND/OR AGENTS MAY NOT BE HELD INDIVIDUALLY LIABLE FOR NEGLIGENCE ARISING OUT OF, CONNECTED WITH, OR RESULTING FROM THEIR SERVICES PROVIDED PURSUANT TO THIS AGREEMENT.**

**Indemnification** – Client agrees to defend, indemnify and save harmless NE from all claims, including negligence claims, suits, losses, personal injuries, death and property liability resulting from NE's performance of the proposed work, whether such claims or damages are caused in part by NE, and agrees to reimburse NE for expenses in connection with any such claims or suits, including reasonable attorney's fees. Client's obligation to indemnify is limited to $2 million per occurrence, which Client agrees bears a reasonable commercial relationship to the Work undertaken by NE. Client further agrees that these general conditions are a part of the Work's specifications or bid documents, if any.

**Sampling or Testing Location** - Unless specifically stated to the contrary, the unit fees included in this proposal do not include costs associated with professional land surveying of the site or the accurate horizontal and vertical locations of tests. Field tests or boring locations described in our report or shown on our sketches are based on specific information furnished to us by others and/or estimates made in the field by our technicians. Such dimensions, depths or elevations should be considered as approximations unless otherwise stated in the report. It is understood that all drilling locations are accessible to conventional truck mounted drilling equipment unless otherwise specified by the client. If unscheduled remobilizations or use of portable or all terrain equipment is required additional charges will apply. NE will attempt to clear utilities at our excavation/test locations by manual drilling to 3' below land surface (BLS). Any utilities/obstructions present at client specified test locations or below 3' BLS will be the responsibility of the client.

**Sample Handling and Retention** – Generally soil test samples are retained for approximately three months after which time they will be discarded unless written instructions to the contrary are received from the client.

**Legal Jurisdiction** - The parties agree that any actions brought to enforce any provision of this Agreement shall only be brought in a court of competent jurisdiction located in Palm Beach County, Florida. Any and all causes of action arising out of NE's performance of the Work, including but not limited to claims for indemnity, contribution and equitable subrogation, shall be deemed to have accrued and the applicable statutes of limitations shall commence to run not later than the date of NE's last invoice for the Work performed hereunder.

**Force Majeure** - NE shall not be held responsible for any delay or failure in performance of any part of this Agreement to the extent such delay or failure is caused by fire, flood, explosion, war, strike, embargo, government requirement, civil or military authority, acts of God, act or omission of subcontractors, carriers, client or other similar causes beyond its control.

**Documents** - NE shall be entitled to rely upon the accuracy and completeness of all surveys, reports and information furnished by the client. If conditions different from those described in our report are found at the site, NE should be notified in writing immediately upon discovery. NE reserves the right to revise conclusions and recommendations presented in the final report should additional information regarding the project become available. All permits will be obtained by others unless otherwise specified in this proposal or in writing to NE. NE has no liability for consequences of information not provided or unavailable or otherwise not reviewed or known from the normal sources customarily examined by NE in such investigations within the time frame allowed for this investigation under this agreement. The client, entities identified in writing on the address portion of our report, design team professionals engaged by our client and building official staff are entitled to use and rely upon NE'S reports for purposes of the current project. Other parties are not authorized to use or rely upon NE'S reports unless NE so states in writing.

NE - General Contract Terms and Conditions May 2017

cc: Kristina Berryman – Business Development Manager
James Lendl – CMT Department Manager

Prop Equip Storage Bldg Eckler Engr 360 Davis Rd Palm Spgs geo 8-28-19

# Village of Palm Springs

# Executive Brief

**AGENDA DATE:** May 13, 2021

**DEPARTMENT:** Public Service

---

**ITEM 6.13:** Approve Change Order No. 4 (Task Order #234) - Prairie Road Bridge Replacement Utility Relocation Project - Public Service Department (FY 2021 Budget Funded - Water & Sewer Enterprise Fund) - Palm Beach County

**SUMMARY:** On July 9, 2020, the Village Council approved Task Order #234 with Palm Beach County for professional engineering services and the construction of the Prairie Road Bridge Replacement Utility Relocation Project in the amount of $220,206.

Currently, the Public Service Department is requesting approval of Change Order #4 to Task Order #234 for Palm Beach County in the amount of $12,908.86 as it was determined during construction that the contractor was unable to construct the water main directly under the shoulder barrier footings. As a result, the water main is required to be adjusted to the west and then back up to cross the canal.

Note: The Public Service Department staff had been coordinating with Palm Beach County on their plans for constructing a new bridge on Prairie Road (crossing over the Lake Worth Drainage District's L-8 Canal) for several years. Currently, the Village maintains a vacuum sewer main and a water main that were attached to the existing bridge and were required to be relocated to accommodate the new bridge. As a result, in accordance with state law (Florida Interlocal cooperation Act of 1969), the Interlocal Agreement approved by the Village Council on July 9, 2020 requires the Village to reimburse the County for the actual costs to relocate the water main and vacuum sewer main.

As a result, the Public Service Department is recommending an amendment to the approved Task Order No. 234 (Change Order #4) with Palm Beach County in the amount of $21,360.46 to support the costs associated with relocating the utility lines as a result of unforeseen conflicts during the construction process (Task Order #234).

The proposed tasks and associated costs to provide the professional engineering services to complete this project are as follows:

| Work to be Completed | **Amount** |
|---|---|
| Original Contract Amount - Engineering & Design, Bidding & Construction | $220,206.00 |
| • Approved Change Order #1 - Deducted from Contingency | ($ 4,310.70) |
| • Approved Change Order #2 - Deducted from Contingency | ($ 16,556.78) |
| • Approved Change Order #3 - Deducted from Contingency | ($ 7,381.92) |
| Add: Change Order #4 | $ 21,360.46 |
| Minus Contingency Remaining | ($ 8,451.60) |
| **Final Revised Contract Amount** | $233,114.86 |

Note: The Village approved funding ($245,000) within the FY 2021 Budget - Water and Sewer Fund to support this utility relocation project (design & construction).

If approved, the revised total for professional engineering design, bidding and construction costs for the Prairie Road Bridge Replacement Utility Relocation Project within Task Order #234 (Change Orders #4) will be increased to $233,114.86. An internal budget transfer or amendment to support this proposed cost above the budgeted amount may be completed within the Water & Sewer Enterprise Fund at a later date, if necessary. The Village will not expend more than the amount within the approved budget as it may be adopted/amended each year for these goods and services over the term of this contract.

No additional change orders are anticipated for this project.; however, any change orders by the County requiring additional funding by the Village would require advanced written approval from the Village.

It is estimated that the proposed Prairie Road Bridge Replacement Utility Relocation Project will be completed by October 2021.

The proposed Change Order #4 (Task Order #4) was prepared by Drawdy Construction Company, Inc (PBC's contractor) and reviewed by Palm Beach County, the Village's contracted engineer, Eckler Engineering, Assistant Public Services Director/Engineer, Village Attorney and Finance Director.

**FISCAL IMPACT:**

Funding to support the proposed Prairie Road Bridge Replacement Utility Relocation project (Task Order No. 234) is available within the FY 2021 Budget - Water and Sewer Enterprise Fund.

| ***Allocated/Estimated Project Funding:*** | |
|---|---|

| | |
|---|---|
| FY 2018 Actual Budget - Water and Sewer Enterprise Fund | $ 2,225.59 |
| FY 2019 Actual Budget - Water and Sewer Enterprise Fund | $ 36,496.41 |
| FY 2020 Actual Budget - Water and Sewer Enterprise Fund | $ 27,778.00 |
| FY 2021 Approved Budget - Water and Sewer Enterprise Fund | $245,000.00 |
| **Total Allocated/Estimated Budget** | **$311,500.00** |

| ***Expected Project Costs - Engineering & Design and Construction*** | |
|---|---|
| FY 2018 Project Cost - Engineering - Water and Sewer Enterprise Fund | $ 2,225.59 |
| FY 2019 Project Cost - Engineering - Water & Sewer Enterprise Fund | $ 36,496.41 |
| FY 2020 Project Cost - Engineering - Water & Sewer Enterprise Fund | $ 27,778.00 |
| FY 2021 Project Cost - Engineering - Water & Sewer Enterprise Fund | $ 11,907.20 |
| FY 2021 Project Request/Cost - Construction - Water & Sewer Enterprise Fund | $183,505.00 |
| FY 2021 Project Request/Cost - Contingency - Water & Sewer Enterprise Fund | $ 36,701.00 |
| • Deducted Change Order #1 from Contingency - Water & Sewer Enterprise Fund | • ($ 4,310.70) |
| • Deducted Change Order #2 from Contingency - Water & Sewer Enterprise Fund | • ($ 16,556.78) |
| • Deducted Change Order #3 from Contingency - Water & Sewer Enterprise Fund | • ($ 7,381.92) |
| • Balance of Contingency - Water & Sewer Enterprise Fund | • $ 8,451.60 |
| Additional Funding Requested Change Order #4 - Water & Sewer Enterprise Fund | $ 12,908.86 |
| **TOTAL PROJECT REQUEST/COST (REVISED)** | **$301,522.06** |

The Village will not expend more than the amount within the approved budgets as they may be adopted/amended each year for these goods and services over the term of this contract.

An internal budget transfer or amendment to support this proposed cost will be completed within the Water & Sewer Enterprise Fund at at later date, if necessary.

**ATTACHMENTS:**

Proposed Change Order No. 4 - Palm Beach County

Approved Interlocal Agreement - PBC & Village of Palm Springs - Prairie Road Bridge Replacement Utility Relocation Project

**Drawdy Construction Co., Inc.**
10201 Lantana Rd
Lake Worth, FL 33449
561-965-8092

# Change Order #004

Date : 2/19/2021
Attention : Zach King and Kevin Debrincat

Palm Beach County Board of County Commissioners
Department of Engineering and Public Works
2300 North Jog Road West Palm Beach FL. 33411

Prepared By : Ashley Drawdy Torres
Email Address : ashley@drawdyconstruction.net
Cell : 561-307-3408
Project Name : Prairie Rd over L8 Canal Bridge Replacement
Project Location : West Palm Beach, FL
Project #: 2016505

**Change Order Description: Installation of new 10" water main going under the shoulder barrier footings them claiming back up, place the 10" WM on the bridge cap at the new location (see attached COR #003 from Matador Construction and Land Development, Inc.)**

| Item No. | Descreption | Quantity | Unit | Total Unit Price | Total Cost |
|---|---|---|---|---|---|
| A | **Installation of New 10"Water Main at the new location** | | | | $ - |
| 55 | (additional) 10" Ductile Iron Pipe Water Main Installation | 37 | LF | $ 120.00 | $ 4,440.00 |
| 57 | (additional) F&I 10" ductile Iron 45 degree fittings w/ reaction blocking or thrust restraint for WM | 9 | EA | $ 1,200.00 | $ 10,800.00 |
| 1 | MCLD Equipment & Personnel Cost for the change of scope | 1 | LS | $ 4,735.36 | $ 4,735.36 |
| 2 | MCLD Mark Up of 17.5% | 1 | LS | $ 828.69 | $ 828.69 |
| 3 | DCC Mark UP of 10% | 1 | LS | $ 556.41 | $ 556.41 |

| | | |
|---|---|---|
| **SUBTOTAL** | **$** | **21,360.46** |
| **TOTAL PRICE OF CHANGE ORDER** | **$** | **21,360.46** |

| Item No. | DCC Equipment & Personal needed to complete this Task | Quantity | Unit | Total Unit Price | Total Cost |
|---|---|---|---|---|---|
| 1 | Forman (2) | 4 | hours | $ 95.00 | $ 380.00 |
| 2 | Laborer (4) | 4 | hours | $ 94.00 | $ 376.00 |
| 3 | Pick Up (2) | 2 | day | $ 121.25 | $ 242.50 |
| 4 | | | | | $ - |
| | | | | | $ - |
| | | | | | $ - |
| | | | | | $ - |
| | | | | | $ - |
| | | | | | $ - |
| | | | | | $ - |

| | | |
|---|---|---|
| **SUBTOTAL** | **$** | **998.50** |

## Note's

1 Drawdy Construction will be onsite to help move the pipe.
2 DCC Equipment & Personal amount not added into the overall change order amount

By _____ Date 2-19-2021
Ashley Drawdy Torres, Drawdy Construction Co., Inc.

By _____ Date _____
Zach King, Palm Beach County

MATADOR
CONSTRUCTION AND LAND DEVELOPMENT, INC.

2781 Vista Parkway, UNIT K2
West Palm Beach Florida 33411
561-318-7679

# Change Order Request #003
# Revised 2-17-21

**Prairie Road Bridge Replacement**

**Installation of New 10" Water Main going under the Shoulder Barrier Footings then claiming back up place the 10" WM on the bridge cap at the new location**

Date : 2/17/2021
Drawdy Construction Co., INC.
Ashley Drawdy-Torres
Estimator

Prepared By : Austin Perez
Email Address : austin@matadorconstruction.org
Cell : 561-685-5517
Revised

**Change Order Description** After noticing that the new 10" Water Main was going through the concrete barrier wall the decision was made to move the water main to the west and install it under the shoulder footing and using fitting to come up to the cap of the bridge.

| Item No. | Item | Quantity | Unit | Total Unit Price | Total Cost |
|---|---|---|---|---|---|
| A | **Utility Items** | | | | |
| 55 | (Additional) 10" Ductile Iron Pipe Water Main Installation | 37 | LF | $ 120.00 | $ 4,440.00 |
| 57 | (Additional) F&I 10" Ductile Iron 45 Degree Fittings w/Reaction Blocking or Trust Restraint for WM | 9 | EA | $ 1,200.00 | $ 10,800.00 |
| | | | | | |
| | | | | | |
| | MCLC Equipment & Personal Cost for the change of scope | 1 | LS | $ 4,735.36 | $ 4,735.36 |
| | 17.5% Mark-Up | 1 | LS | $ 828.69 | $ 828.69 |
| | | | | **TOTAL** | **$ 5,564.05** |
| | | | | **Grand Total of COR #003** | **$ 20,804.05** |

**MCLD:** Will install to proposed 10" WM under the shoulder barrier footer with 1 foot of clearance from the bottom of the footer to the top of the 10" WM.

| Item No. | MCLD Equipment & Personal needed to complete this Task | Quantity | Unit | Total Unit Price | Total Cost |
|---|---|---|---|---|---|
| 1 | Forman | 16 | HRs | $ 56.25 | $ 900.00 |
| 2 | Pipe Layer | 16 | HRs | $ 27.00 | $ 432.00 |
| 3 | Tail Man | 16 | HRs | $ 22.50 | $ 360.00 |
| 4 | Hill Man | 16 | HRs | $ 21.00 | $ 336.00 |
| 5 | Trac Hoe | 16 | HRs | $ 94.54 | $ 1,512.64 |
| 6 | Loader | 16 | HRs | $ 61.38 | $ 982.08 |
| 7 | Pick Up | 16 | HRs | $ 13.29 | $ 212.64 |
| | | | | **TOTAL** | **$ 4,735.36** |

**Note's**

1 MCLD will furnish labor, equipment and materials for the standard construction practices in accordance with the City of Palm Springs.

**Matador Construction & Land Development, Inc.**

By_____ Date_____
**Austin Perez, Vice-President**

**Drawdy Construction Co., INC.**

By Ashley Drawdy-Torres Date 2-19-21
Ashley Drawdy-Torres

**INTERLOCAL AGREEMENT BETWEEN PALM BEACH COUNTY, FLORIDA AND VILLAGE OF PALM SPRINGS FOR JOINT PARTICIPATION AND PROJECT FUNDING FOR CONSTRUCTION OF UTILITY ADJUSTMENTS FOR PRAIRIE ROAD BRIDGE OVER LWDD L-8 CANAL PALM BEACH COUNTY PROJECT NO. 2016505**

**THIS Interlocal Agreement**, (AGREEMENT), for Prairie Road Bridge over LWDD L-8 Canal (PROJECT), is made as of the _____ day of _____, 2020, by and between Palm Beach County, a political subdivision of the State of Florida, by and through its Board of County Commissioners (COUNTY) and the Village of Palm Springs, a municipal corporation existing under the laws of Florida, (hereinafter "VILLAGE"), each one constituting a public agency defined in Part I of Chapter 163, Florida Statutes (individually Party and collectively Parties).

**WHEREAS,** Section 163.01, Florida Statutes, authorizes local governments to make the most efficient use of their powers by enabling them to cooperate with other localities on a basis of mutual advantage, thereby providing services and facilities that will harmonize geographic, economic, population, and other factors influencing the needs and development of local communities; and

**WHEREAS,** Part I of Chapter 163, Florida Statutes, permits public agencies as defined therein to enter into Interlocal Agreements with each other to jointly exercise any power, privilege, or authority which such agencies share in common and which each might exercise separately; and

**WHEREAS**, the VILLAGE has requested the COUNTY to construct water main, sewer main and associated appurtenance adjustments to the VILLAGE'S system (UTILITY WORK) within the limits of the PROJECT; and

**WHEREAS**, the COUNTY and the VILLAGE desire to jointly participate in the UTILITY WORK ; and

**WHEREAS**, both COUNTY and VILLAGE declare that it is in the public interest that the UTILITY WORK be constructed with the PROJECT; and

**NOW, THEREFORE,** in consideration of the mutual covenants, promises, and representations contained herein, the Parties agree as follows:

Section 1. Recitals.

The above recitals are true and correct and are incorporated herein.

Section 2. COUNTY Responsibilities:

A. COUNTY shall provide construction and administrative services to the PROJECT as more specifically described in the Bid Documents for Palm Beach County Project No. 2016505. Said Bid Documents include the UTILITY WORK as shown in VILLAGE prepared Utility Matrix, Applicable Technical Specifications, Standard Construction Details, and Approved Product List.

B. COUNTY shall obtain written approval from the VILLAGE in advance of any change orders, including any costs associated with the VILLAGE'S failure to approve change orders in a timely manner, which increase the cost attributable to the UTILITY WORK to an amount greater than the contract amount as stated in Section 3A below. VILLAGE'S Approval shall not be unreasonably withheld.

C. COUNTY shall secure all necessary easements and permits required for PROJECT.

D. COUNTY shall publicly bid, administer, construct and inspect the PROJECT and UTILITY WORK in accordance with the Bid Documents and Exhibit "A".

E. COUNTY shall require the contractor to provide a Public Construction Bond in an amount equal to the contractor's bid for the PROJECT and the UTILITY WORK.

Section 3. VILLAGE'S Responsibilities:

A. VILLAGE shall reimburse COUNTY a total estimated cost including 20% contingency of **Two Hundred Twenty Thousand Two Hundred and Six Dollars ($220,206.00)**, provided COUNTY performs pursuant to the terms and conditions of this Agreement for all UTILITY WORK in accordance with the Bid Tabulation (Exhibit "A") and cost summary (Exhibit "B"). Any cost exceeding this amount attributable to VILLAGE'S Utility Items shall be paid by the VILLAGE.

B. Costs shall be based upon actual contract costs using contract unit prices and actual constructed quantities, said quantities being measured by the COUNTY with concurrence by the VILLAGE.

C. Upon completion of the PROJECT and the UTILITY WORK, the VILLAGE shall repair and maintain the UTILITY WORK, at VILLAGE'S expense.

Section 4. Payments/Invoicing and Reimbursement:

The COUNTY will invoice the VILLAGE on a periodic basis during construction of the PROJECT and the UTILITY WORK. The VILLAGE agrees to provide to COUNTY payment for documented costs for the UTILITY WORK in the amount established in Section 3.A. COUNTY shall submit all invoices to the VILLAGE identifying the UTILITY WORK, including COUNTY'S total expenditure for the PROJECT, and identifying the amount attributable to the UTILITY WORK under Exhibit "A". COUNTY shall supply any further documentation such as copies of paid receipts, canceled checks, invoices and other documents deemed necessary by the VILLAGE within seven (7) calendar days of request by the VILLAGE. Invoices received from COUNTY will be reviewed and approved by the VILLAGE to ensure that expenditures have been made in conformity with this

AGREEMENT. Upon COUNTY'S submission of acceptable documents needed to substantiate its costs for the UTILITY WORK, VILLAGE will provide said payment to COUNTY on a reimbursement basis within thirty (30) days of receipt of all required documents. In no event shall the VILLAGE provide advance payment to the COUNTY.

The PROJECT and the UTILITY WORK will be administered by the COUNTY. Only those costs incurred by the COUNTY relating to the UTILITY WORK are eligible for reimbursement by the VILLAGE pursuant to the terms and conditions hereof. In the event the COUNTY ceases or suspends the PROJECT or the UTILITY WORK for any reason, the VILLAGE will reimburse the COUNTY for the UTILITY WORK completed as of the date the COUNTY suspends the UTILITY WORK. Any remaining unpaid portion of this AGREEMENT shall be retained by the VILLAGE and the VILLAGE shall have no further obligation to honor reimbursement requests submitted by the COUNTY.

Section 5. Access and Audits:

COUNTY and VILLAGE shall maintain adequate records to justify all charges, expenses and costs incurred in performing the PROJECT and the UTILITY WORK for at least five (5) years after completion or termination of this AGREEMENT. Each Party shall have access to such books, records, and documents as required in this section for the purpose of inspection or audit during normal business hours, at the other Parties place of business. In the event any work is subcontracted by COUNTY, COUNTY shall similarly require each contractor and subcontractor to maintain and allow access to such records for audit purposes.

Section 6. Independent Contractor:

COUNTY and the VILLAGE are and shall be, in the performance of all work, services and activities under this AGREEMENT Independent Contractors and not employees, agents or servants of the other Party. All COUNTY employees engaged in the work or services performed pursuant to this AGREEMENT shall at all times, and in all places, be subject to COUNTY'S sole direction, supervision, and control. All VILLAGE employees engaged in the work or services performed pursuant to this AGREEMENT shall at all times, and in all places, be subject to VILLAGE'S sole direction, supervision, and control. The Parties shall exercise control over the means and manner in which it and its employees perform the work, and in all respects the Parties relationship and the relationship of its employees to the other Party shall be that of an Independent Contractor and not as employees or agents of the other.

Neither COUNTY nor the VILLAGE have the power or authority to bind the other in any promise, agreement or representation.

Section 7. Personnel:

COUNTY represents that it has, or will secure at its own expense, all necessary personnel required to perform the services under this AGREEMENT. Such personnel shall not be employees of or have any contractual relationship with the VILLAGE.

All of the services required hereinunder shall be performed by COUNTY or its contractor, and personnel engaged in performing the services shall be fully qualified and, if required, authorized

or permitted under state and local law to perform such services.

All of COUNTY'S personnel, contractors and all subcontractors while on COUNTY premises will conduct themselves in an acceptable manner and follow acceptable safety and security procedures.

Section 8. Indemnification:

The VILLAGE and COUNTY recognize their liability for certain tortious acts of its agents, officers, employees and invitees to the extent and limits provided in Section 768.28, Florida Statutes. To the extent permitted by law, the VILLAGE and COUNTY shall indemnify, defend and hold the other harmless against any actions, claims and damages arising out of the their own negligence in connection with the PROJECT and the UTILITY WORK and the use of the funds provided under this AGREEMENT. The foregoing indemnification shall not constitute a waiver of sovereign immunity beyond the limits set forth in Section 768.28, Florida Statutes, nor shall the same be construed to constitute an agreement by the VILLAGE or COUNTY to indemnify each other for sole negligence, or willful or intentional acts of the other. The foregoing indemnification shall survive termination of this AGREEMENT.

No provision of this AGREEMENT is intended to, or shall be construed to, create any third party beneficiary or to provide any rights to any person or entity not a party to this AGREEMENT, including but not limited to any citizen or employees of the COUNTY and/or VILLAGE .

Section 9. Annual Appropriation:

All provisions of this AGREEMENT calling for the expenditure of ad valorem tax money by either the COUNTY or the VILLAGE are subject to annual budgetary funding and should either Party involuntarily fail to fund any of their respective obligations pursuant to the AGREEMENT, this AGREEMENT may be terminated. However, once the PROJECT and the UTILITY WORK have been awarded to the contractor, it shall be prosecuted to completion and this AGREEMENT shall be binding upon the Parties and neither Party shall have the right to terminate the subject AGREEMENT for the reason that sufficient funds are not available.

Section 10. Breach and Opportunity to Cure:

The Parties expressly covenant and agree that in the event either Party is in default of its obligations under this AGREEMENT, each Party shall have thirty (30) days written notice before exercising any of its rights.

Section 11. Enforcement Costs:

Any costs or expenses (including reasonable attorney's fees) associated with the enforcement of the terms and conditions of this AGREEMENT shall be borne by the respective Parties.

Section 12. Notice:

All notices required to be given under this AGREEMENT shall be in writing, and deemed sufficient to each Party when sent by United States Mail, postage prepaid, to the following:

All notice to the VILLAGE shall be sent to:

Ronald Eyma, P.E. Public Service Director
Village of Palm Springs
226 Cypress Lane
Palm Springs, FL 33461

All notice to the COUNTY shall be sent to:

Morton L. Rose, P.E., Director
Palm Beach County Engineering & Public Works
Roadway Production Division
P.O. Box 21229
West Palm Beach, FL 33416-1229

Section 13. Modification and Amendment:

Except as expressly permitted herein to the contrary, no modification, amendment or alteration in the terms or conditions contained herein shall be effective unless contained in a written document executed with the same formality and equality of dignity herewith.

Section 14. Remedies:

This AGREEMENT shall be governed by the laws of the State of Florida. Any legal action necessary to enforce this AGREEMENT will be held in a court of competent jurisdiction located in Palm Beach County, Florida. No remedy herein conferred upon any Party is intended to be exclusive of any other remedy, and each and every such remedy shall be cumulative and shall be in addition to every other remedy given hereunder or now or hereafter existing at law or in equity by statute or otherwise. No single or partial exercise by any Party of any right, power or remedy hereunder shall preclude any other or further exercise thereof.

Section 15. No Waiver:

Any waiver by either Party of its rights with respect to a default under this AGREEMENT, or with respect to any other matters arising in connection with this AGREEMENT, shall not be deemed a waiver with respect to any subsequent default or other matter. The failure of either Party to enforce strict performance by the other Party of any of the provisions of this AGREEMENT or to exercise any rights under this AGREEMENT shall not be construed as a waiver or relinquishment to any extent of such Party's right to assert or rely upon any such provisions or rights in that or any other instance.

Section 16. Joint Preparation:

The preparation of this AGREEMENT has been a joint effort of the Parties, and the resulting document shall not, solely as a matter of judicial constraint, be construed more severely against one of the Parties than the other.

Section 17. Non-Discrimination:

COUNTY and VILLAGE agree that both Parties shall not conduct business with nor appropriate any funds for any organization or entity that practices discrimination on the basis of race, color, national origin, religion, ancestry, sex, age, familial status, marital status, sexual orientation, gender identity or expression, disability, or genetic information. COUNTY will ensure that all contracts let for the PROJECT and the UTILITY WORK pursuant to the terms of this AGREEMENT will contain a similar non-discrimination clause.

Section 18. Execution:

This AGREEMENT may be executed in two or more counterparts, each of which shall be deemed an original, but all of which together shall constitute one and the same instrument.

Section 19. Filing:

A copy of this AGREEMENT shall be filed with the Clerk of the Circuit Court in and for Palm Beach County, Florida.

Section 20. Termination:

This AGREEMENT may be terminated by either Party upon sixty (60) days prior written notice to the other Party, except as otherwise addressed in this AGREEMENT. However, once the PROJECT and the UTILITY WORK has commenced, it shall be prosecuted to completion and this AGREEMENT shall be binding upon the Parties and neither Party shall have the right to terminate the subject AGREEMENT.

Section 21. Compliance with Codes and Laws:

COUNTY and VILLAGE shall abide by all applicable federal, state and local laws, orders, rules and regulations when performing under this AGREEMENT. COUNTY and VILLAGE further agree to include this provision in all subcontracts issued as a result of this AGREEMENT.

Section 22. Office of the Inspector General:

Palm Beach County has established the Office of the Inspector General, in Palm Beach County code section 2-421-2-440, as may be amended. The Inspector General's authority includes but is not limited to the power to review past, present and proposed County contracts, transactions, accounts and records, to require the production of records, and audit, investigate, monitor, and inspect the activities of the contractor, its officers, agents, employees, and lobbyists in order to ensure compliance with contract specifications and detect corruption and fraud. All contractors and parties doing business with the County and receiving County funds shall fully cooperate

with the Inspector General including receiving access to records relating to Bid or any resulting contract.

Section 23. Public Entity Crime Certification:

As provided in F.S. 287.132-133, by entering into this AGREEMENT or performing any work in furtherance hereof, COUNTY shall have its contractors certify that it, its affiliates, suppliers, subcontractors and consultants who will perform hereunder, have not been placed on the convicted vendor list maintained by the State of Florida Department of Management Services within the 36 months immediately preceding the date hereof. This notice is required by F.S. 287.133 (3) (a).

Section 24. Severability:

If any term or provision of this AGREEMENT, or the application thereof to any person or circumstances shall, to any extent, be held invalid or unenforceable, the remainder of this AGREEMENT, or the application of such terms or provision, to persons or circumstances other than those as to which it is held invalid or unenforceable, shall not be affected, and every other term and provision of this AGREEMENT shall be deemed valid and enforceable to the extent permitted by law.

Section 25. Entirety of Agreement:

COUNTY and VILLAGE agree that this AGREEMENT sets forth the entire AGREEMENT between the Parties, and there are no promises or understandings other than those stated herein.

Section 26. Survival:

The obligations, rights, and remedies of the Parties hereunder, which by their nature survive the termination of this AGREEMENT or the completion of the PROJECT and UTILITY WORK, shall survive such termination or PROJECT or UTILITY WORK completion and inure to the benefit of the Parties.

Section 27. Term:

The term of this AGREEMENT shall be effective on the date of execution of this AGREEMENT by both Parties.

**IN WITNESS WHEREOF**, the undersigned Parties have executed this AGREEMENT on the day and year first written above.

VILLAGE OF PALM SPRINGS

BY: _____
Bev Smith, Mayor

ATTEST:

Kimberly M. Wynn,
VILLAGE CLERK

BY: _____ 7/9/2020
(DATE)

PALM BEACH COUNTY, FLORIDA,

BY: _____
Tanya N. McConnell, P.E.,
Deputy County Engineer

APPROVED AS TO TERMS
AND CONDITIONS

By: _____
SR Morton Rose, P.E., Director
Roadway Production Division

APPROVED AS TO FORM
AND LEGAL SUFFICIENCY

BY: _____
Village Attorney

APPROVED AS TO FORM
AND LEGAL SUFFICIENCY

BY: _____
Assistant County Attorney

F:\ROADWAY\UTILITY COORDINATION\FORMS New\Master Utility Construction Agreement.doc

# Village of Palm Springs

# Executive Brief

**AGENDA DATE:** May 13, 2021

**DEPARTMENT:** Public Service

---

**ITEM 6.14:**

Approve Change Order No. 1 (Task Order #260 - Work Authorization EE-U03) - Professional Engineering Services - Material Storage Building at 2400 Kirk Rd - Public Service Department (FY 2021 Budget Funded - Water & Sewer Enterprise Fund) - Eckler Engineering

**SUMMARY:**

On November 14, 2019, the Village Council approved the Task Order #260 with Eckler Engineering for the professional engineering services associated with the design and construction of the Pipe & Material Storage Building Project (Task Order No. 260) at the 2400 Kirk Road Utilities Maintenance Building in the amount of $38,648.00.

Currently, the Public Service Department is requesting approval of Change Order No. 1 to Task Order #260 (Work Authorization EE-U03) for Eckler Engineering in the amount of $3,000 to provide additional engineering and design services to reflect the Pipe and Material Storage Building at 2400 Kirk Road as the base bid and the East Building at the Main Water Treatment Plant as an alternate as well as to update the bid documents to go out to bid for a 2nd time (due to pricing/bids that were significantly over the Village's budgeted amount).

Note: The Village Utilities division stores miscellaneous utility supplies outside at the east end of the property in an open-air fenced area, which degrades some of the materials. Thus, a covered storage structure is proposed to be built on the east side of the existing utilities maintenance building creating approximately 1,800 square feet of covered storage space.

Note: In an effort to lower design and construction costs for this project (and to ensure vendor interest to take on this project) it has been recommended by Eckler Engineering and Village Staff to combine this project (Task Order No. 260) with the proposed Storage Building for Maintenance Equipment that will be located at the Village's Main Water Treatment Plant (Task

Order No. 261) and bid them as one, single project.

As a result, the Village's contracted engineer, Eckler Engineering, and the Public Service Department is recommending an amendment to the approved Task Order #260 (Change Order #1) with Eckler Engineering in the amount of $3,000 to support additional engineering and design services as well as additional/updated bidding services (Task Order No. 260 - Work Authorization EE-U03).

The proposed tasks and associated costs to provide the professional engineering services to complete this project are as follows:

| **Work to be Completed** | **Amount** |
|---|---|
| Original Contract Amount - Design & Bidding | $23,540.00 |
| Original Contract Amount - Construction Services | $15,108.00 |
| Add: Proposed Change Order No. 1 | $ 3,000.00 |
| **Final Revised Contract Amount** | **$41,648.00** |

Note: The Village Council has approved funding ($185,000) within the FY 2021 Budget - Water & Sewer Enterprise Fund to support this project (design & construction).

If approved, the revised total for professional engineering design, bidding and construction services cost for the Material Storage Building project at 2400 Kirk Road within Task Order No. 260 will be increased to $41,648. An internal budget transfer or amendment to support this proposed cost above the budgeted amount may be completed within the Water & Sewer Enterprise Fund at a later date, if necessary. The Village will not expend more than the amount within the approved budget as it may be adopted/amended each year for these goods and services over the term of this contract.

No additional change orders are anticipated for this project.

It is estimated that Material Storage Building project at 2400 Kirk Road require an additional thirty (30) days (May/June 2021) to complete the design work from the date the change order is issued to Eckler Engineering and construction is estimated to be completed approximately five (5) months (January/February 2022) following the Notice to Proceed by the Village (11 months total if alternate bid for 2nd building at Main WTP is accepted).

The proposed Change Order #1 (Task Order No. 260 - Work Authorization EE-U03) was prepared by Eckler Engineering and reviewed by the Assistant Public Service Director/Engineer, Public Service Project Manager, Assistant Village Manager, Village Attorney and the Finance Director.

**FISCAL IMPACT:**

Funding to support the proposed Material Storage Building at 2400 Kirk Road Project (Task Order No. 260) is available within the FY 2021 - Water & Sewer Enterprise Fund.

| ***Allocated/Estimated Project Funding*** | ***Amount*** |
|---|---|
| FY 2020 Actual - Water & Sewer Enterprise Fund (TO #260): | $ 22,598.40 |
| FY 2021 Approved Budget - Water & Sewer Enterprise Fund (TO #260): | $185,000.00 |
| **Total Allocated/Estimated Budget** | **$207,598.40** |

| ***Expected Project Costs - Engineering & Design Services*** | ***Amount*** |
|---|---|
| Original Project Cost (Design & Bidding) - Water & Sewer Enterprise Fund (TO #260): | $ 23,540.00 |
| Original Project Cost (Const. Services) - Water & Sewer Enterprise Fund (TO #260): | $ 15,108.00 |
| Proposed Change Order No. 1 | $ 3,000.00 |
| **Total Project Cost – Engineering & Design Services** | **$ 41,648.00** |
| | |
| ***Expected Project Costs - Construction Services*** | |
| Projected Construction Costs - Water & Sewer Enterprise Fund (TO #260): | $214,000.00 |
| **Total Project Cost – Construction Services** | **$214,000.00** |
| | |
| **TOTAL PROJECT REQUEST/COST (REVISED)** | **$255,648.00** |

The Village will not expend more than the amount in the approved budget as it may be adopted / approved each year for these goods and services for the term of the contract.

An internal budget transfer or amendment to support this proposed cost above the budgeted amount may be completed within the Water & Sewer Enterprise Fund at a later date, if necessary.

**ATTACHMENTS:**

Proposed Change Order No. 1 & Work Authorization Ee-U03 - Eckler Engineering
Approved Work Authorization EE-U03 - Eckler Engineering

ECKLER ENGINEERING, INC.

February 5, 2021 (Sent via email to: wsanchez@vpsfl.org)
400-083.01

Mr. Walter Sanchez
Village of Palm Springs
226 Cypress Lane
Palm Springs, FL 33461

Dear Mr. Sanchez:

Reference: Engineering Scope Revision No. 1
Kirk Road Pipe and Material Storage Building
Eckler Engineering Work Authorization No. EE-U03
Village P.O. No.: 032 (FY 2021)

This Scope Revision is being submitted at the Village's request to rebid the Kirk Road Pipe and Material Storage Building & Main WTP Equipment Storage Buildings projects due to high bids and underfunding. The rebid shall revise the Contract Documents to reflect the Kirk Road Pipe and Material Storage Building as the base bid with the East Building at the Main WTP as an alternate. The North Building at the Main WTP shall be eliminated from the bid. The anticipated work associated with this request is as follows:

1. General bid coordination with the Village and project management.

2. Revise the Specifications to reflect updated bid numbers, dates (bid advertisement, pre-pre-bid conference, bid opening, etc…), and description of work.

3. Revise the Drawings to reflect updated bid numbers and dates.

4. Bidding services for attending meetings (pre-bid and bid opening), site visit (if necessary), answering bidder questions, bid evaluation, and recommendation of award.

For the additional items summarized above, we request **$3,000.00** for the anticipated work effort. The attached spreadsheet provides a breakdown of our proposed fee.

If you have any questions or require additional information pertaining to the attached documents or the project in general, please do not hesitate to contact me.

Sincerely,

Chase Dickinson

Chase Dickinson, P.E.

Encl.

# ENGINEERING SCOPE REVISION

| | | | |
|---|---|---|---|
| **Project:** | Kirk Road Pipe & Material Storage Building | **Client:** | Village of Palm Springs |
| **EEI Project No:** | 400-083.01 | **Contact:** | Walter Sanchez |
| **Revision No:** | 1 | **Date:** | February 3, 2021 |

**Nature of Revision:**

This Engineering Scope Revision covers work required to modify and prepare the drawings and specifications for rebid. Specifically, the following items shall be added:

1. General project management and bidding coordination.
2. Specification revisions necessary for bid coordination and updating summary of work.
3. Bidding services for attending meetings (pre-bid and bid opening), site visit (if necessary), answering bidder questions, bid evaluation, and recommendation of award.

**Scope of Services:**

1. Engineering services (Items 1 through 3 above) in accordance with the attached fee breakdown spreadsheet = **$3,000.00**

| | | | |
|---|---|---|---|
| **Original Engineering Design Fee:** | $23,540.00 | **Original Time:** | 190 Days |
| **Previous Revisions:** | $0.00 | **Previous Revisions:** | 0 Days |
| **This Revision:** | $3,000.00 | **This Revision:** | 30 Days |
| **Revised Fee** | $26,540.00 | **Revised Time:** | 220 Days |

| **Prepared by:** | **Accepted by:** |
|---|---|
| Chase Dickinson, P.E.<br>Project Manager<br>Eckler Engineering, Inc. | Walter Sanchez<br>Project Manager<br>Village of Palm Springs |

**Attachments:**

☒ Revision Fee Breakdown ☐ Other:

☐ Revised Schedule

Y:\Documents\Village\400-083.01 Kirk Road Pipe & Material Building\Project Management\Engineering Scope Revisions\Engineering Scope Revison No. 1\W. Sanchez - Scope Revision #01.docx



*4700 RIVERSIDE DRIVE, SUITE 110*
*CORAL SPRINGS, FL 330367*
*954/510-4700*
*FAX 954/755-2741*

# VILLAGE OF PALM SPRINGS

**KIRK ROAD PIPE & MATERIAL STORAGE BUILDING AND MAIN WTP EQUIPMENT STORAGE BUILDING**
**WORK AUTHORIZATION NO. EE-U03**
**SCOPE REVISION**

DATE: February 3, 2021

*I. DESIGN PHASE LABOR*

| | TASK DESCRIPTION | PERSONNEL | | | | | | | | | | |
|---|---|---|---|---|---|---|---|---|---|---|---|---|
| | | Principal | Engineer 8 | Engineer 6 | Engineer 4 | Engineer 3 | Engineer 1 | Technician 4 | Technician 3 | Technician 2 | Resident | Administrative |
| 1 | General bid coordination and project management | | 1 | | 2 | | | | | | | |
| 2 | Specification revisions | | 1 | | 4 | | | | | | | |
| 3 | Drawing revisions | | 1 | | 4 | | | | 8 | | | |
| 4 | Bidding services (meetings, site visit, bidder questions, bid evaluation, recommendation of award) | | 1 | | 5 | | | | | | | |
| | Total Hours | 0 | 4 | 0 | 15 | 0 | 0 | 0 | 8 | 0 | 0 | 0 |
| | Rate | $205.00 | $180.00 | $154.00 | $123.00 | $107.00 | $91.00 | $121.00 | $110.00 | $92.00 | $95.00 | $70.00 |
| | Sub-Total Labor | $0.00 | $720.00 | $0.00 | $1,845.00 | $0.00 | $0.00 | $0.00 | $880.00 | $0.00 | $0.00 | $0.00 |
| | | | | | | | | | | **TOTAL LABOR** | | $3,445.00 |

*II. REIMBURSABLE EXPENSES DESIGN PHASE*

| EXPENSE ITEM | EXPENSE TYPE | UNIT | No. OF UNITS | COST PER UNIT | TOTAL COST |
|---|---|---|---|---|---|
| 1 | REPRODUCTION | | | | |
| | Half Size drawings (11"x17") | EA | 0 | $31.50 | $0.00 |
| | Full Size drawings (22"x34") | EA | 0 | $73.08 | $0.00 |
| | Specification Booklets | EA | 0 | $50.00 | $0.00 |
| 2 | PHOTOCOPIES | EA | 0 | $0.20 | $0.00 |
| 3 | PLOTTING | | | | |
| | 22 X 34 (SET UP) | EA | 0 | $3.00 | $0.00 |
| | 11 X 17 (SET UP) | EA | 0 | $3.00 | $0.00 |
| 4 | TRAVEL | | | | |
| | MILEAGE | MILE | 0 | $0.545 | $0.00 |
| | TOLLS | EA | 0 | $0.00 | $0.00 |
| 5 | SUBCONSULTANTS | | | | |
| | SURVEY | LS | 0 | $0.00 | $0.00 |
| | ELECTRICAL/I&C | LS | 0 | $0.00 | $0.00 |
| | STRUCTURAL | LS | 0 | $0.00 | $0.00 |
| | GEOTECHNICAL | LS | 0 | $0.00 | $0.00 |
| | HYDROGEOLOGIC | LS | 0 | $0.00 | $0.00 |
| | RADIO SURVEY/LICENSING | LS | 0 | $0.00 | $0.00 |
| | HVAC | LS | 0 | $0.00 | $0.00 |
| | | | | **TOTAL EXPENSES** | $0.00 |

| | |
|---|---|
| **GRAND TOTAL** | $3,445.00 |
| **USE** | $3,000.00 |

# ECKLER ENGINEERING, INC.

October 29, 2019
400-000.BD

Mr. Walter Sanchez.
Village of Palm Springs
226 Cypress Lane
Palm Springs, FL 33461

Dear Mr. Sanchez:

Reference: Proposal for Engineering Services
Design and Construction Phases for the
Kirk Road Pipe/Material Building
Eckler Engineering Work Authorization No. EE-U03

Enclosed is Work Authorization No. EE-U03 outlining the engineering services required for design and services during construction for the Kirk Road Pipe/Material Building.

Eckler Engineering proposes to provide the design phase services for the lump sum fee of $23,540.00 and the engineering services during construction on an hourly rate plus direct expenses basis not to exceed $15,108.00 without the additional authorization of the Village Council.

If this Work Authorization meets with your approval, please coordinate placing on the next available Village Council Agenda. Following Council approval, please return one executed copy and the necessary Village of Palm Springs purchase order to our office approving Authorization to Proceed.

Eckler Engineering looks forward to the opportunity of continuing to provide professional engineering services to the Village of Palm Springs on this project. If you have any questions or require additional information pertaining to this Work Authorization, please do not hesitate to contact me.

Sincerely,

Douglas K. Hammann, P.E.

Encl.



Y:\Documents\Village\400-000.BD\Task Orders\WA EE-U03 Kirk Road Pipe and Material Building\WA Letter.docx

*"Celebrating Service to South Florida Since 1985"*

4700 RIVERSIDE DRIVE, SUITE 110
CORAL SPRINGS, FL 33067

954/510-4700
FAX 954/755-2741

**VILLAGE OF PALM SPRINGS**

**CONSULTING SERVICE WORK AUTHORIZATION**

DATE: October 29, 2019 VILLAGE RFQ. NO.: 2018R-002

WORK AUTHORIZATION NO. EE-U03 FOR CONSULTING SERVICES

TASK ORDER (PROJECT) No. 260 G/L CODE: 41336-56200

ECKLER ENGINEERING PROJECT NO.: 400-083.01

PROJECT TITLE: Kirk Road Pipe/Material Building

This Work Authorization, when executed, shall be incorporated in and shall become an integral part of the Agreement for Professional Services dated September 13, 2018 between the Village of Palm Springs ("VILLAGE"), and Eckler Engineering, Inc. ("CONSULTANT") hereafter referred to as the Agreement.

## I. PROJECT DESCRIPTION

VILLAGE Utility Maintenance staff stores equipment and pipe at the Kirk Road Utility Maintenance Facility. This equipment and material are stored outdoors and exposed to the elements, including continuous exposure to sunlight and UV radiation. This exposure is detrimental to many of the stored materials and equipment, specifically PVC pipe. To protect the VILLAGE's investment into utility maintenance materials and equipment, CONSULTANT has provided this work authorization to provide engineering services for the design and engineering services during construction of a pipe and materials storage building. The following general scope of work is proposed:

1. New pre-engineered metal structure/building on existing concrete slab.
2. New reinforced concrete column foundations.
3. Painting of proposed structure to match with the Kirk Road Maintenance Facility.
4. Restoration of existing Kirk Road Maintenance Facility grounds of previous equipment and material storage area. Existing gate and fencing to remain.

## II. SCOPE OF SERVICES

The following is a description of the services to be provided under this Task Order.

### A. DESIGN PHASE

The Design Phase will include the following services:

## TASK D1 - PROJECT ADMINISTRATION/MANAGEMENT

This task focuses on the administration of the project including project setup, client interface and general project management and administration.

## TASK D2 - DATA GATHERING AND PRELIMINARY COORDINATION

This task focuses on obtaining the necessary preliminary information required to prepare detailed engineering plans and specifications.

1. Visit the site and review pertinent features that may impact design and/or construction.

2. Collect existing facility's data including field conditions, access, and other information needed to complete the design.

3. Meet with appropriate VILLAGE staff to discuss the project requirements.

4. Coordination and completion of SUBCONSULTANT'S professional services for geotechnical engineering and topographical surveying services.

## TASK D3 - PRELIMINARY DESIGN REPORT

This task not required. The design conditions are currently known and defined.

## TASK D4 - DRAWINGS AND ENGINEERING

This task consists of the engineering and the development of plans necessary to construct this project. The CONSULTANT will prepare detailed drawings for the proposed work as discussed in this task order. A tentative list of drawings to be prepared for this project is presented in ATTACHMENT 1.

## TASK D5 - SPECIFICATION PREPARATION

1. Prepare Standard EJCDC (current VILLAGE standard) Contract Forms, Bidding Documents and Contract Conditions required for this project.

2. Prepare technical specifications required for this project in Division 1 through Division 16. These specifications, utilizing the CSI format, will be prepared and will consist of written technical descriptions of materials, equipment and construction systems, standards and workmanship required for this project as developed by CONSULTANT. A tentative list of specification sections to be prepared for this project is presented in ATTACHMENT 2.

## TASK D6 - PERMIT PREPARATION ASSISTANCE

This task consists of the preparation of the following construction permit application submittals:

1. No regulatory permits are anticipated.

   Any additional design phase permits required beyond the above will be considered as outside the scope of this proposal.

## TASK D7 - PREPARE OPINION(S) OF PROBABLE CONSTRUCTION COST

Prepare the 90%, 100%, and Final completion level opinion(s) of probable construction cost for new facilities and improvements proposed under this project.

## TASK D8 - BIDDING ASSISTANCE SERVICES

This task will include work necessary to assist the VILLAGE with the bidding of the project. This work may include the following:

1. Coordinate bidding requirements with VILLAGE and prepare electronic bid documents for distribution by the VILLAGE Clerk's office. Bidding documents shall be in .pdf format on CD or electronic submittal.

2. Assist VILLAGE Clerk's Office with the coordination of the bidding documents, the advertisement for bids, respond to communications from bidders, and issuance of addenda information as required.

3. Attend the prebid meeting and prepare/distribute minutes to registered bidding contractors. VILLAGE Clerk's Office shall publish final Prebid Meeting Minutes.

4. Attend the bid opening and tabulate the bids provided by interested contractors.

## TASK D9 - BID EVALUATION AND RECOMMENDATION OF AWARD ASSISTANCE

This task shall consist of the review and evaluation of the bids to make a recommendation of a bidder for award of a contract. A recommendation of award letter shall be prepared and submitted to VILLAGE.

## TASK D10 - SUBMIT AND REVIEW (QUALITY CONTROL)

The CONSULTANT will make the following submittals at various completion levels of this project for the purpose of VILLAGE's review and comment for coordination and quality control. A review meeting will be requested following each submittal to discuss and receive comments from the VILLAGE. The VILLAGE's comments shall be incorporated into revisions prior to the next subsequent quality control submittal.

Quality control submittals for this project are anticipated at the following completion levels:

1. 90% Drawings and Specifications
2. 100% Drawings and Specifications
3. Final Drawings and Specifications

The CONSULTANT will incorporate the agreed-upon revisions made by the VILLAGE.

A total of three (3) meetings with the VILLAGE is the level of effort for this Task.

## B. ENGINEERING SERVICES DURING CONSTRUCTION

### TASK C1 – PROJECT ADMINISTRATION/MANAGEMENT

This task focuses on the administration of the project including project setup, client interface and general project management and administration.

### TASK C2 - PRECONSTRUCTION ACTIVITIES PRIOR TO NOTICE TO PROCEED

After issuance of a Notice of Award by VILLAGE, assist in the preparation and signing of the Contract Documents. The CONSULTANT will also undertake other preconstruction activities which include coordinating, attending and preparing minutes of the preconstruction conference meeting and assisting the Contractor in finalizing the permits required for the construction of this project by providing the required number of signed/sealed drawing sets.

### TASK C3 - CONSULT AND ADVISE

Provide technical advice and assistance to VILLAGE during the construction period and provide necessary interpretations and clarifications of the Contract Documents as required by VILLAGE or Contractor by responding to RFI's or other documentation. Evaluation of and response to an estimated five (5) RFI's is the level of effort estimated for this task.

### TASK C4 - REVIEW SHOP DRAWINGS

Review Shop Drawings and samples, the results of tests and inspections, and other data submitted by the Contractor in accordance with the Contract Documents. A total of six (6) submittals is the estimated basis for this item's budget.

### TASK C5 - REVIEW PAY REQUESTS AND SCHEDULES

Review estimated three (3) monthly pay requests and make recommendations for

payment to VILLAGE. Monthly pay requests will be reviewed in the field and an agreement reached between the Contractor, VILLAGE's project representative(s), and the CONSULTANT prior to formal submittal to VILLAGE for payment. Review the Contractor's preliminary and monthly progress schedules through completion.

**TASK C6 - PERFORM PERIODIC AND MILESTONE INSPECTIONS**

CONSULTANT will make periodic site visits at intervals appropriate to the various stages of construction to observe the work, determine conformity with the plans and specifications, and compliance with the construction permits. It is anticipated that there will be a total of six (6) visits.

Perform inspections to determine that the project has achieved substantial completion and readiness for final acceptance and that the work has been completed in general conformance with the Contract Documents to certify completion of construction to permitting agencies, where applicable. Two (2) such site visits are anticipated.

**TASK C7 - PROGRESS MEETINGS**

This task not required.

**TASK C8 - CONTRACT MODIFICATIONS**

Develop the necessary data, notes, and clarification drawings required to prepare contract modifications to reflect adjustments to the construction project. One (1) contract modification incorporating a total of four (4) items, is the estimated basis for this budget item.

**TASK C9 - PROJECT CLOSEOUT**

Review the Contractor's record drawing information which shows the work as it was constructed. Prepare for VILLAGE record drawings and prints showing those changes made during the construction process based upon information provided by the Contractor as follows:

1. CONSULTANT shall prepare record drawings based on Contractor's field data.

2. CONSULTANT shall submit record documents to VILLAGE.

3. CONSULTANT shall attend the final project reconciliation meetings with VILLAGE and CONTRACTOR.

**TASK C10 - REGULATORY AGENCY DOCUMENTATION AND PROJECT CLOSEOUT SUBMITTALS**

Project services in connection with preparing acknowledgment of Final Completion construction submittals with record drawings to the following agencies.

1. None Required

**TASK C11 - SPECIAL SERVICES**

This Task not required.

## III. DELIVERABLES

Project deliverables shall be in accordance with Attachment 3.

## IV. SCHEDULE

Upon receipt of Notice-To-Proceed the CONSULTANT will complete the services identified in this Work Authorization within the schedule outlined in Attachment 4.

## V. COMPENSATION AND PAYMENT

The CONSULTANT will perform the tasks as outlined in the scope of services for the fees as outlined below in Tables 1 and 2 and further detailed in Attachments 5 and 6.

### A. DESIGN PHASE

1. For services described in Part II. A. - Design Phase, Tasks D1 through D10, the lump sum fee of **$23,540.00.**

**TABLE 1**
**DESIGN PHASE**
**BUDGET SUMMARY**

| Description | Total |
|---|---|
| D1 - Project Administration / Management | $2,554.00 |
| D2 - Data Gathering and Preliminary Coordination | $1,354.00 |
| D3 - Not Used | $0.00 |
| D4 - Drawings and Engineering | $5,620.00 |
| D5 - Specification Preparation | $1,932.00 |
| D6 – Permit Preparation Assistance | $406.00 |
| D7 - Prepare Opinions of Probable Construction Cost | $1,188.00 |
| D8 - Bidding Assistance Services | $1,856.00 |
| D9 - Bid Evaluation and Recommendation of Award | $964.00 |
| D10 - Submit and Review (Quality Control) | $2,449.00 |
| Reimbursable Expenses | $5,217.00 |
| **TOTAL LUMP SUM FEE** | **$23,540.00** |

### B. CONSTRUCTION PHASE

1. For services described in Part II. B. - Construction Phase, Tasks C1 through C11, not to exceed fee of **$15,108.00.**

**TABLE 2**
**ENGINEERING SERVICES DURING CONSTRUCTION**
**BUDGET SUMMARY**

| Description | Total |
|---|---|
| C-1 Project Administration / Management | $2,208.00 |
| C-2 Preconstruction Activities Prior to Notice to Proceed | $1,648.00 |
| C-3 Consult and Advise | $1,102.00 |
| C-4 Review Shop Drawings | $1,624.00 |
| C-5 Review Pay Requests & Schedules | $742.00 |
| C-6 Perform Periodic & Milestone Inspections | $3,328.00 |
| C-7 Not Used | $0.00 |
| C-8 Contract Modifications | $1,032.00 |
| C-9 Project Closeout | $3,424.00 |
| C-10 Not Used | $0.00 |
| C-11 Not Used | $0.00 |
| Reimbursable Expenses | $0.00 |
| **TOTAL NOT-TO-EXCEED FEE** | **$15,108.00** |

## VI. ASSUMPTIONS

This Work Authorization does not include the provision of the following items:

A. Payment of permit fees.

B. Any expert witness or testimony services.

C. Services not specifically indicated in this Work Authorization.

This Work Authorization assumes the following data or assistance will be provided by VILLAGE:

A. Attendance at project meetings.

B. General project review, where required.

C. Provide pertinent project data and information available from VILLAGE when requested by CONSULTANT.

D. Facility access and other project related information requested by CONSULTANT.

E. VILLAGE Project Representative Services (Part time when CONSULTANT's representative is not on site.)

F. Services which will be provided by the VILLAGE resident project representative will include the following:

1. Monitor that project is constructed in conformance with the Contract Documents.
2. Make periodic on-site field observations of the Contractor's performance. The limits of the authority of the on-site representative are as defined within the Contract Documents.

3. Observe field tests and review the results of tests required by the Contract Documents.
4. Assist in the development of punch lists in conjunction with the milestone inspections to determine if the project has achieved Substantial and Final Completion and that the work has been completed in general conformance with the Contract Documents.
5. Provide daily reports of Contractor activity to the CONSULTANT on a form provided by the CONSULTANT.
6. Provide photographs of the work during construction showing typical construction progress.
7. Keep the CONSULTANT informed of any changes which need to be made and assist CONSULTANT with the change decision.
8. Be present at all required times for permit compliance.

## VII. AGREEMENT REFERENCE

The work authorized under this Work Authorization shall be performed under the terms and conditions described within the Professional Services Agreement dated September 13, 2018, by and between the Village of Palm Springs ("VILLAGE") and Eckler Engineering, Inc. ("CONSULTANT"). Compensation shall not exceed the hourly rates currently in effect under this Agreement.

**ECKLER ENGINEERING, INC.**

By: _____

Print Name: Douglas K. Hammann, P.E.

Title: President

**VILLAGE OF PALM SPRINGS**

By: _____

Date: 11-14-19

Village Attorney's Office

Approved as to form and legality

By: _____

(Required if over $25,000)

## ATTACHMENT 1

## WORK AUTHORIZATION NUMBER EE-U03
## KIRK ROAD PIPE/MATERIAL BUILDING
## TENTATIVE LIST OF DRAWINGS

| Drawing Sheet No. | Title |
|---|---|
| **General** | |
| | Cover sheet |
| G-1 | Project Location Map & Index to Drawings |
| G-2 | General Notes and Abbreviations |
| G-3 | Design Criteria |
| G-4, 5, 6, 7 | Specifications |
| **Survey** | |
| SUR-1 | Site Survey and Soil Boring Locations |
| **Civil** | |
| C-1 | Demolition Plan |
| C-2 | Site Plan |
| CD-1 | Standard Details – Civil |
| **Structural** | |
| S-1 | Foundation/Floor Plan |
| S-2 | Sections and Details |
| S-3 | Structure Elevations |
| SD-1 | Standard Details – Structural |

(Remainder of page left blank intentionally.)

**ATTACHMENT 2**

**WORK AUTHORIZATION NUMBER EE-U03**
**KIRK ROAD PIPE/MATERIAL BUILDING**
**TENTATIVE LIST OF SPECIFICATIONS**

| SECTION NO. | TITLE |
|---|---|
| **PART 1** | **BIDDING REQUIREMENTS** |
| 00111 | Advertisement for Bids |
| 00200 | Instructions to Bidders |
| 00400 | Bid Submission Checklist |
| 00410 | Bid Form |
| 00430 | Bid Bond (Penal Sum) |
| 00440 | Florida Trench Safety Act Certification |
| 00451 | Qualification Statement |
| 00452 | Disputes |
| 00453 | Noncollusion Affidavit |
| 00454 | Drug-Free Workplace Certificate |
| 00455 | Public Entity Crimes |
| **PART 2** | **CONTRACT FORMS** |
| 00510 | Notice of Award |
| 00520 | Agreement |
| 00550 | Notice to Proceed |
| 00610 | Performance Bond |
| 00615 | Payment Bond |
| **PART 3** | **CONTRACT CONDITIONS** |
| 00700 | General Conditions |
| 00800 | Supplementary Conditions |
| **PART 4** | **MISCELLANEOUS DOCUMENTS** |
| 00620 | Contractor's Application for Payment |
| 00625 | Certificate of Substantial Completion |
| 00940 | Work Change Directive |
| 00941 | Change Order |
| 00942 | Field Order |
| **PART 5** | **SPECIFICATIONS** |

Technical specifications will be included in Drawing Set.

## ATTACHMENT 3

## WORK AUTHORIZATION NUMBER U03
## KIRK ROAD PIPE/MATERIAL BUILDING

## LIST OF PROJECT DELIVERABLES

**DESIGN PHASE**

A. 90% Design Submittal

1. One (1) set of 11" x 17" Drawings, 90% complete.
2. One (1) Specification Booklet.
3. 90% Completion Estimate of Probable Construction Cost.
4. Updated Project Schedule.

(Electronic submittal process shall be used. Hard copy documents available upon request.)

B. 100% Design Submittal

1. One (1) set of 11" x 17" Drawings, 100% complete.
2. One (1) Specification Booklet.
3. 100% Completion Estimate of Probable Construction Cost.
4. Updated Project Schedule.

(Electronic submittal process shall be used. Hard copy documents available upon request.)

C. Final Design Submittal

1. One (1) set of 11" x 17" Drawings, 100% complete.
2. One (1) Specification Booklet.
3. Final Completion Estimate of Probable Construction Cost.
4. Updated Project Schedule.

(Electronic submittal process shall be used. Hard copy documents available upon request.)

D. Bidding (Final) Coordination Submittal

1. One (1) set of 11" x 17" Drawings (Final).

2. One (1) Specification Booklet.

3. One (1) Final Completion Estimate of Probable Construction Cost.

4. Updated Project Schedule.

(Electronic submittal process shall be used. Hard copy documents available upon request.)

**BIDDING SERVICES**

A. Pre-Bid

1. Pre-bid Meeting Minutes Information.

2. Addenda Information, as required, to the VILLAGE and/or Contractors.

B. Post Bid

1. Bid Tabulation.

2. Recommendation of Award Letter.

3. Contractor Notice of Tentative Award.

**CONSTRUCTION PHASE**

A. Pre-Construction

1. Three (3) sets of 22" x 34" signed/sealed drawings and specifications for Building Permit Submittal.

2. Three (3) sets of drawings (11" x 17") and specifications for VILLAGE's use during construction.

3. Three (3) sets of drawings (11" x 17") and specifications for CONTRACTOR's use during construction.

4. Pre-construction conference meeting agenda and minutes.

B. Shop Drawings

1. Electronic copies of accepted and final shop drawings.

C. Construction Inspection

1. Site visit reports will be provided for each site visit in accordance with Task(s) C6.

D. Progress Meetings

1. N/A

E. Contract Modifications

1. Four (4) copies of all completed contract modifications.

F. Pay Requests

1. Copies of reviewed and approved partial and final pay request applications.

G. Record Drawings and Project Closeout

1. Two (2) sets of record drawings.

2. Two (2) CD's with record drawings in .pdf and ACAD (2016 Civil 3D) formats.

H. Commissioning and Startup Reports.

1. N/A

(Remainder of page left blank intentionally.)

## ATTACHMENT 4

## WORK AUTHORIZATION NUMBER EE-U03
## KIRK ROAD PIPE/MATERIAL BUILDING

## PRELIMINARY PROJECT SCHEDULE

| Activity | Duration (Days) | Cumulative Time (Days) |
|---|---|---|
| Authorization to Proceed | 0 | 0 |
| Preliminary Coordination internally and with VILLAGE | 7 | 7 |
| Project Site Assessment and Data Gathering | 30 | 37 |
| Submit Plans and Specifications (90%) | 30 | 67 |
| Receive VILLAGE Review Comments* | 14 | 81 |
| Submit Plans and Specifications (100%) | 14 | 95 |
| Receive VILLAGE Review Comments* | 14 | 109 |
| Submit Plans and Specifications (Final Submittal) | 7 | 116 |
| Receive Final VILLAGE Review Comments | 7 | 123 |
| Regulatory Permitting | N/A | - |
| Prepare Bid Documents and Bidding Coordination with VILLAGE* | 7 | 130 |
| Bidding and Contract Award Phase* | 60 | 190 |
| Construction (Final Completion) | 150 | 340 |
| Project Closeout | 14 | 354 |

* The schedule is based upon conducting a review meeting within 14 calendar days after the Village receives the design submittal. All review comments shall be provided to Consultant within 14 calendar days after the Village receives the submittal. An adjustment to the overall schedule will be required in the event the review meeting takes longer to be conducted and/or obtaining comments takes longer to receive.

Detailed schedule will be provided upon receipt of authorization to proceed and will include specific submittal dated.

# Village of Palm Springs

# Executive Brief

**AGENDA DATE:** May 13, 2021

**DEPARTMENT:** Public Service

---

**ITEM 6.15:** Approve Surficial Aquifer Well Rehabilitation Agreement - Piggyback - Public Service Department (FY 2021 Budget Funded - Water & Sewer Enterprise Funded) - Centerline Drilling, Inc.

**SUMMARY:** The Public Service Department has a need throughout the year to provide wellfield maintenance and rehabilitation services (i.e., rehabilitate surficial aquifer wells) within the Village's utility system. The Village has utilized Centerline Drilling, Inc. to assist with these types of projects/services and the previously piggybacked contract (from the Town of Jupiter) expired on January 8, 2021.

To ensure the lowest possible price, staff is recommending that the Village piggyback off the current Town of Jupiter contract awarded to Centerline Drilling, Inc. This selection by the Town of Jupiter was completed through a competitive selection process - Surficial Wellfield Rehabilitation Program (ITB# W2111-0-2020 - December 8, 2020).

If approved, the Village would accept Centerline Drilling, Inc.'s pricing by piggybacking the Town of Jupiter's contract including all terms, conditions and pricing therein. The term of the proposed contract would expire on February 16, 2024 and may be renewed for two (2) additional one (1) year periods. The Village will not expend more than the amount in the approved budget as it may be adopted/amended each year for these goods and services over the term of this contract.

The Village's Purchasing Code, Section 58-9, Accessing contracts of other government agencies, provides that the Village may award a contract by piggy-backing or accessing the goods and/or services from any State of Florida contract; contracts of any Florida political subdivision; or from any other governmental entity (other than the Federal government); provided that the same or substantially similar goods and/or services were competitively solicited.

The proposed Agreement was prepared by the Village Attorney and reviewed by the Assistant Public Service Director/Engineer, the Utilities Superintendent and the Finance Director.

The Village has worked with the proposed vendor and has received excellent service and a quality product.

**FISCAL IMPACT:**

Funding to support purchases under this proposed agreement is available within the FY 2021 Budget - Water & Sewer Enterprise Fund:

| ***Allocated/Estimated Services Funding:*** | ***Amount*** |
|---|---|
| FY 2021 Approved Budget - Water & Sewer Fund | $68,000.00 |

| ***Expected Services Cost:*** | ***Amount*** |
|---|---|
| Project Request/Cost - Water & Sewer Fund | $54,000.00 |

The Village will not expend more than the amount within the approved budget as it may be adopted/amended each year for these goods and services over the term of this contract.

**ATTACHMENTS:**

Proposed Piggyback Agreement - Centerline Drilling
Approval to Piggyback - Centerline Drilling
Town of Jupiter - Executed Contract - Centerline Drilling
Town of Jupiter - Bid Tabulation
Town of Jupiter - Bid Response - Centerline Drilling
Town of Jupiter - Invitation to Bid

# AGREEMENT FOR SURFICIAL AQUIFER WELL REHABILITATION

This Agreement for Surficial Aquifer Well Rehabilitation ("Agreement" hereafter) is made as of the _____ day of _____, 2021D you have the , by and between the **Village of Palm Springs**, 226 Cypress Lane, Palm Springs, Florida 33461-1699, a municipal corporation organized and existing under the laws of the State of Florida, hereinafter referred to as the VILLAGE, and **Centerline Drilling, Inc.**, 1696 Old Okeechobee Blvd., Suite #3C, West Palm Beach, FL 33409, a corporation authorized to do business in the State of Florida, hereinafter referred to as the CONTRACTOR.

## RECITALS

WHEREAS, the VILLAGE is in need of a contractor to provide the VILLAGE with the services for surficial aquifer well rehabilitation on an as needed basis; and,

WHEREAS, the Town of Jupiter through its competitive selection process awarded the Contract for Surficial Aquifer Well Rehabilitation (W2111-0-2020) ("Jupiter Contract" hereafter) to the CONTRACTOR for substantially the same services sought by the VILLAGE; and,

WHEREAS, the VILLAGE requested and the CONTRACTOR has executed this Agreement with the VILLAGE for surficial aquifer well rehabilitation services based on the pricing and terms and conditions of the Jupiter Contract; and,

WHEREAS, the VILLAGE desires to accept CONTRACTOR's pricing by piggy-backing the Jupiter Contract including all terms, conditions and pricing therein.

NOW THEREFORE, in consideration of the mutual promises set forth herein, the receipt and sufficiency of which are hereby acknowledged, the parties hereto agree as follows:

1. Recitals. The parties agree that the recitals set forth above are true and correct and are fully incorporated herein by reference.

2. Jupiter Contract. The Jupiter Contract with the CONTRACTOR is hereby expressly made a part of this Agreement as fully as if set forth at length herein. The VILLAGE shall have all rights, obligations and remedies authorized to the Town of Jupiter under the Jupiter Contract and all associated and applicable Contract Documents as defined therein.

3. CONTRACTOR's Proposal. In accordance with the terms and conditions in the Jupiter Contract and pricing therein, the CONTRACTOR shall provide surficial aquifer well rehabilitation services as requested by the VILLAGE. The services to be provided by the CONTRACTOR shall be commenced subsequent to the execution and approval of this Agreement by the VILLAGE in accordance with the terms of the Jupiter Contract.

4. Contract Documents and Conflict of Terms and Conditions. The Contract Documents for this Agreement are compromised of the following:

A. All written modifications and amendments hereto;
B. This Agreement (including all exhibits);
C. Jupiter Contract (including all Contract Documents as defined therein).

The Contract Documents of this Agreement are intended to be complementary and interpreted in harmony so as to avoid conflict with the words and phrases interpreted in a manner consistent with construction and design industry standards. In the event of any inconsistency, conflict or ambiguity between or among the Contract Documents of this Agreement, the Contract Documents of this Agreement shall take precedence in the following order:

A. All written modifications and amendments hereto;
B. This Agreement.
C. The Jupiter Contract.

5. Compensation to Contractor. Payments by the Village to the Contractor under this Agreement shall not exceed the amount of compensation, unit prices, stated in the CONTRACTOR's proposal to the Town of Jupiter ITB, which shall be considered the "Contract price." Contractor waives consequential or incidental damages for claims, disputes or other matters in question arising out of or relating to this Agreement.

6. Miscellaneous Provisions.

6.1 The Village and Contractor each binds itself, its partners, its successors, assigns and legal representatives to the other party hereto, its partners, successors, assigns and legal representatives in respect of all covenants, agreements and obligations contained in the Contract Documents.

6.2 Reserved.

6.3 Headings and References & Exhibits: The headings contained in this Contract are inserted for convenience of reference only and shall not be a part or control or affect the meaning hereof. All references herein to Exhibits are to the exhibits hereto, each of which shall be incorporated into and deemed to be a part of this Contract.

6.4 Counterparts: This Contract may be executed in two or more counterparts, each of which shall be deemed to be an original, but all of which shall be deemed to be an original, but each of which together shall constitute one and the same instrument.

6.5 Entire Contract; Amendment and Waiver: This Contract (together with the Exhibits hereto) supersedes any and all prior negotiations and oral or written agreements heretofore made relating to the subject matter hereof and, except for written agreements, if any, executed and delivered simultaneously with or subsequent to the date of this Contract, constitutes the entire agreement of the parties relating to the subject matter hereof. This Contract may not be altered or

amended except by a writing signed by the parties hereto. No waiver of any of the terms or conditions of this Contract shall be effective unless in writing and executed by the party to be changed therewith. No waiver of any condition or of the breach of any term, covenant, representation, warranty or other provision hereof shall be deemed to be construed as a further or continuing waiver of any such condition or breach or a waiver of any other condition or of any breach of any other term, covenant, representation, warranty or other provision contained in this Contract.

6.6 Successors and Assigns: This Contract shall be binding upon, and shall inure to the benefit of the parties hereto and their respective successors and assigns.

6.7 Governing Law; Consent to Jurisdiction: This Contract shall be governed by and construed and interpreted in accordance with the laws of the State of Florida. Each of the parties hereto (a) irrevocably submit itself to the exclusive jurisdiction of the Fifteenth Judicial Circuit Court in and for Palm Beach County, Florida for state actions and jurisdiction of the United States District Court for the Southern District of Florida, Palm Beach Division, for the purposes of any suit, action or other proceeding arising out of, or relating to, this Contract; (b) waives and agrees not to assert against any party hereto, by way of motion, as a defense of otherwise, in any suit, action or other proceeding, any claim that it is not personally subject to the jurisdiction of the above-named courts for any reason whatsoever; and (ii) to the extent permitted by applicable law, any claim that such suit, action or proceeding by any part hereto is brought in an inconvenient forum or that the venue of such suit, action or proceeding is improper or that this Contract or the subject matter hereof may not be enforced in or by such courts.

6.8 Third Party Beneficiary rights: This Contract shall create no rights or claims whatsoever in any person other than a party herein.

6.9 Severability: If any one or more of the provisions of the Contract shall be held to be invalid, illegal or unenforceable in any respect, the validity, legality and enforceability of the remaining provisions hereof shall not in any way be affected or impaired thereby.

6.10 Effective date, term and renewal: The effective date of this Contract is the date the Contract is approved by the Village Council. The term shall be the same as the term specified in the Jupiter Contract, which initial term shall not expire until January 10, 2019. This Contract may be renewed provided the underlying agreement with the Town of Jupiter is renewed. Such renewal may be approved by the Village Manager provided the same terms, conditions and pricing are maintained.

6.11 Preparation: This Contract shall not be construed more strongly against either party regardless of who was more responsible for its preparation.

6.12 Palm Beach County Inspector General: In accordance with Palm Beach County Ordinance No. 2011-009, the Contractor acknowledges that this Agreement may be subject to investigation and/or audit by the Palm Beach County Inspector General. The Contractor has reviewed Palm Beach County ordinance number 2011-009 and is aware of its rights and/or obligations under such ordinance.

6.13 All notices required in this Agreement shall be sent by certified mail, return receipt requested, and sent to the addresses appearing on the first page of this Agreement.

6.14 The Village is exempt from payment of Florida State Sales and Use Tax. The Contractor shall not be exempted from paying sales tax to its suppliers for materials used to fill contractual obligations with the Village, nor is the Contractor authorized to use the Village's Tax Exemption Number in securing such materials.

7. Public Records.

Contractor shall comply with Florida's Public Records Act, Chapter 119, Florida Statutes, and, if determined to be acting on behalf of the Village as provided under section 119.011(2), Florida Statutes, specifically agrees to:

(a) Keep and maintain public records required by the Village to perform the service.

(b) Upon request from the Village's custodian of public records or designee, provide the Village with a copy of the requested records or allow the records to be inspected or copied within a reasonable time at a cost that does not exceed the cost provided in Chapter 119, Florida Statutes, or as otherwise provided by law.

(c) Ensure that public records that are exempt or confidential and exempt from public records disclosure requirements are not disclosed except as authorized by law for the duration of this Contract and following completion of this Contract if the Contractor does not transfer the records to the Village.

(d) Upon completion of this Contract, transfer, at no cost, to the Village all public records in possession of the Contractor or keep and maintain public records required by the Village to perform the service. If the Contractor transfers all public records to the Village upon completion of the Contract, the Contractor shall destroy any duplicate public records that are exempt or confidential and exempt from public records disclosure requirements. If the Contractor keeps and maintains public records upon completion of the Contract, the Contractor shall meet all applicable requirements for retaining public records. All records stored electronically must be provided to the Village, upon request from the Village's custodian of public records or designee, in a format that is compatible with the information technology systems of the Village.

**IF THE CONTRACTOR HAS QUESTIONS REGARDING THE APPLICATION OF CHAPTER 119, FLORIDA STATUTES, TO THE CONTRACTOR'S DUTY TO PROVIDE PUBLIC RECORDS RELATING TO THIS CONTRACT, CONTACT THE CUSTODIAN OF PUBLIC RECORDS OR DESIGNEE AT 561-434-5084, kwynn@vpsfl.org, OR BY MAIL AT VILLAGE OF PALM SPRINGS, 226 CYPRESS LANE, PALM SPRINGS, FL 33461.**

7. Indemnity.

The parties recognize that the Contractor is an independent contractor. The Contractor agrees to assume liability for and indemnify, hold harmless, and defend the Village, its council members, mayor, officers, employees, agents, and attorneys of, from, and against all liability and expense, including reasonable attorney's fees, in connection with any and all claims, demands, damages, actions, causes of action, and suits in equity of whatever kind or nature, including claims for personal injury, property damage, equitable relief, or loss of use, to the extent caused by the negligence, recklessness, or intentionally wrongful conduct of the Contractor, its agents, officers, Contractors, subcontractors, employees, or anyone else utilized by the Contractor in the performance of this Contract. The Contractor's liability hereunder shall include all attorney's fees and costs incurred by the Village in the enforcement of this indemnification provision. This includes claims made by the employees of the Contractor against the Village and the Contractor hereby waives its entitlement, if any, to immunity under Section 440.11, Florida Statutes. The obligations contained in this provision shall survive termination of this Contract and shall not be limited by the amount of any insurance required to be obtained or maintained under this Contract.

Subject to the limitations set forth in this Section, Contractor shall assume control of the defense of any claim asserted by a third party against the Village and, in connection with such defense, shall appoint lead counsel, in each case at the Contractor's expense. The Village shall have the right, at its option, to participate in the defense of any third party claim, without relieving Contractor of any of its obligations hereunder. If the Contractor assumes control of the defense of any third party claim in accordance with this paragraph, the Contractor shall obtain the prior written consent of the Village before entering into any settlement of such claim. Notwithstanding anything to the contrary in this Section, the Contractor shall not assume or maintain control of the defense of any third party claim, but shall pay the fees of counsel retained by the Village and all expenses, including experts' fees, if (i) an adverse determination with respect to the third party claim would, in the good faith judgment of the Village, be detrimental in any material respect to the Village's reputation; (ii) the third party claim seeks an injunction or equitable relief against the Village or (iii) the Contractor has failed or is failing to prosecute or defend vigorously the third party claim. Each party shall cooperate, and cause its agents to cooperate, in the defense or prosecution of any third party claim and shall furnish or cause to be furnished such records and information, and attend such conferences, discovery proceedings, hearings, trials, or appeals, as may be reasonably requested in connection therewith.

It is the specific intent of the parties hereto that the foregoing indemnification complies with Section 725.06, Florida Statutes, as amended. Contractor expressly agrees that it will not claim, and waives any claim, that this indemnification violates Section 725.06, Florida Statues. Nothing contained in the foregoing indemnification shall be construed as a waiver of any immunity or limitation of liability the Village may have under the doctrine of sovereign immunity or Section 768.28, Florida Statutes.

8. Defaults, Termination of Agreement.

8.1 If the Contractor fails to satisfactorily perform the work specified in this Agreement; or, is in material breach of a term or condition of this Agreement, the Public Services Director may give written notice to the Contractor specifying defaults to be remedied. Such notice shall set forth the basis for any dissatisfaction and suggest corrective measures. If the Contractor does not remedy defaults within the allotted time or commence good faith steps to remedy the default to the reasonable satisfaction of the Public Services Director, the Village may take such action to remedy the default and all expenses related thereto shall be borne by the Contractor including, without limitation, utilization of another contractor to provide for such work; and/or, the Village may withhold any money due or which may become due to the Contractor for such expense and/or work related to the claimed default. Alternatively, or in addition to the foregoing, if after three (3) days the Contractor has not remedied defaults or commenced good faith steps to remedy defaults to the satisfaction of the Public Services Director, the Village may elect to terminate this Agreement. No compensation shall be paid for de-mobilization, take-down, disengagement wind-down, lost profits or other costs incurred due to termination of this Agreement under this paragraph 8.1.

8.2 Notwithstanding paragraph 8.1, the Village reserves the right and may elect to terminate this Agreement at any time, with or without cause. At such time, the Contractor would be compensated only for the parts provided to the date of termination. In the event material has been ordered or is in the process of being manufactured, the Village must pay for all material ordered or manufactured. No compensation shall be paid for de-mobilization, take-down, disengagement wind-down, lost profits or other costs incurred due to termination of this Agreement under this paragraph 8.2.

9. Insurance.

9.1 The Contractor shall, at its own expense, procure and maintain throughout the term of this Agreement, with insurers acceptable to the Village, the types and amounts of insurance conforming to the minimum requirements set forth below. The Contractor shall not commence services until the required insurance is in force and evidence of insurance acceptable to the Village has been provided to, and approved by, the Village. An appropriate Certification of Insurance shall be satisfactory evidence of insurance. Until such insurance is no longer required by this Contract, the Contractor shall provide the Village with renewal or replacement evidence of insurance at least thirty (30) days prior to the expiration or termination of such insurance.

A. The Contractor shall maintain, during the life of this Agreement, commercial general liability, including contractual liability insurance in the amount of $1,000,000 per occurrence and $2,000,000 aggregate, to protect the Contractor from claims for damages for bodily and personal injury, including wrongful death, as well as from claims of property damages which may arise from any operations under this Agreement, whether such operations be by the Contractor or by anyone directly employed by or contracting with the Contractor.

B. The Contractor shall maintain, during the life of this Agreement, comprehensive automobile liability insurance in the minimum amount of $1,000,000 combined single limit for bodily injury and property damages liability to protect the Contractor from claims for damages for bodily and personal injury, including death, as well as from claims for property damage, which may arise from the ownership, use, or maintenance of owned and non-owned automobiles, including rented automobiles whether such operations be by the Contractor or by anyone directly or indirectly employed by the Contractor .

C. The Contractor shall maintain, during the life of this Agreement, Workers' Compensation Insurance and Employer's Liability Insurance for all employees as required by Florida Statutes.

All insurance, other than Worker's Compensation, to be maintained by the Contractor shall specifically include the Village as an "Additional Insured".

9.2 The insurance provided by the s Contractor hall apply on a primary basis. Any insurance, or self-insurance, maintained by the Village Council shall be excess of, and shall not contribute with, the insurance provided by the Contractor. Except as otherwise specified, no deductible or self-insured retention is permitted.

9.3 Compliance with these insurance requirements shall not limit the liability of the Contractor. Any remedy provided to the Village by the insurance provided by the Village shall be in addition to and not in lieu of any other remedy (including, but not limited to, as an indemnitee of the Contractor) available to the Village under this Agreement or otherwise.

9.4 Neither approval nor failure to disapprove insurance furnished by the Contractor shall relieve the Contractor from responsibility to provide insurance as required by this Agreement.

9.5 The Contractor's failure to obtain, pay for, or maintain any required insurance shall constitute a material breach upon which the Village may immediately terminate or suspend this Agreement. In the event of any termination or suspension, the Village may use the services of another contractor without the Village incurring any liability to the Contractor.

9.6 At its sole discretion, the Village may obtain or renew the Contractor's insurance, and the Village may pay all or part of the premiums. Upon demand, the Contractor shall repay to the Village all monies paid to obtain or renew the insurance. The Village may offset the cost of the premium against any monies due the Contractor from the Village.

10. Public Entity Crimes.

As provided in Sections 287.132-133, Florida Statutes, as amended from time to time, by entering into the Contract Documents, Company certifies that they, their affiliates, suppliers, subcontractors and any other contractors who will perform hereunder, have not been placed on

the convicted vendor list maintained by the State of Florida Department of Management Services within the thirty-six (36) months immediately preceding the date hereof.

11. Scrutinized Companies.

Company certifies that it and its subcontractors are not on the Scrutinized Companies that Boycott Israel List and are not engaged in the boycott of Israel. Pursuant to section 287.135, Florida Statutes, the Village may immediately terminate this Agreement at its sole option if the Company or any of its subcontractors are found to have submitted a false certification; or if the Company or any of its subcontractors, are placed on the Scrutinized Companies that Boycott Israel List or is engaged in the boycott of Israel during the term of this Agreement.

The Company agrees to observe the above requirements for applicable subcontracts entered into for the performance of work under this Agreement. The Company agrees that the certifications in this section shall be effective and relied upon by the Village for the term of this Agreement, including any and all renewals. The Company agrees that if it or any of its subcontractors' status changes in regard to any certification herein, the Company shall immediately notify the Village of the same. As provided in Subsection 287.135(8), Florida Statutes, if federal law ceases to authorize the above-stated contracting prohibitions then they shall become inoperative.

12. E-Verify.

Pursuant to Section 448.095(2), Florida Statutes, beginning on January 1, 2021, the Company shall:

1. Register with and use the E-Verify system to verify the work authorization status of all newly hired employees and require all subcontractors (providing services or receiving funding under this Agreement) to register with and use the E-Verify system to verify the work authorization status of all the subcontractors' newly hired employees;
2. Secure an affidavit from all subcontractors (providing services or receiving funding under this Agreement) stating that the subcontractor does not employ, contract with, or subcontract with an unauthorized alien;
3. Maintain copies of all subcontractor affidavits for the duration of this Agreement;
4. Comply fully, and ensure all of its subcontractors comply fully, with Section 448.095, Florida Statutes;
5. Be aware that a violation of Section 448.09, Florida Statutes (Unauthorized aliens; employment prohibited) shall be grounds for termination of this Agreement; and
6. Be aware that if the Village terminates this Agreement under Section 448.095(2)(c), Florida Statutes, the Company may not be awarded a public contract for at least 1 year after the date on which the Agreement is terminated and will be liable for any additional costs incurred by the Village as a result of the termination of the Agreement.

IN WITNESS WHEREOF, the VILLAGE and CONTRACTOR have caused this Agreement to be executed the day and year shown above.

**ATTEST:**

By: _____
Kimberly Wynn, Village Clerk

**VILLAGE OF PALM SPRINGS, FLORIDA**

By: _____
Bev Smith, Mayor

Approved as to form and legal sufficiency:

_____
Glen J. Torcivia, Village Attorney

CONTRACTOR: **CENTERLINE DRILLING, INC.**

By: _____

Print Name: John Sayle

Title: President

[Corporate Seal]

STATE OF FLORIDA )
COUNTY OF Palm Beach )

The foregoing instrument was acknowledged before me this 28 day of April, ~~2018~~ 2021 by John Sayle, as President of Centerline Drilling, Inc., a corporation authorized to do business in the State of Florida, and who is personally known to me or who has produced the following _____ as identification.

Notary Public

Print Name: Kim Federer
My commission expires: 11-12-23

KIM FEDERER
MY COMMISSION # GG 930923
EXPIRES: November 12, 2023
Bonded Thru Notary Public Underwriters

# *CENTERLINE DRILLING, INC.*

**WATER WELL CONTRACTOR LICENSE #11132**

***1696 Old Okeechobee Road, 3-C***
***West Palm Beach, Florida 33409***
***ctrlinedrilling@aol.com***
***(561) 615-0988 Office***
***(561) 429-8107 Fax***


April 13, 2021

To: Village of Palm Springs
226 Cypress Lane
Palm Springs, FL 33461
Phone (561) 965-4016
Fax (561) 439-4132

Centerline Drilling, Inc. agrees to allow the Village of Palm Springs to piggyback our existing contract with the Town of Jupiter Construction of Surficial Aquifer Well 12A and Surficial Wellfield Rehabilitation Program W2111 with the same terms, conditions, specifications, and pricing which represents our lowest contract prices we have with any other government entity within the State of Florida.

If you have any questions, please do not hesitate to contact office.

Sincerely,
Centerline Drilling, Inc.

John Say, Jr.

John Say Jr.
President

# AGREEMENT

THIS AGREEMENT is dated and will be effective on the 7th day of January in the year 2021, by and between the **VILLAGE OF WELLINGTON**, a Florida municipal corporation, through its Village Council, (hereinafter referred to as "Owner" or "Village"), and **FLORIDA DESIGN DRILLING CORPORATION** a Florida Profit Corporation(hereinafter referred to as "Contractor"), having its principal office at 7733 Hooper Road for **Wellfield Rehabilitation, Maintenance and New Construction** (hereinafter referred to as the "Project") in accordance with the Contract Documents, hereinafter defined.

Owner and Contractor, in consideration of the mutual covenants hereinafter set forth, agree as follows:

**ARTICLE 1 – SCOPE OF WORK**

The Contractor will provide all materials, supervision, light, power, transportation, labor, tools and equipment necessary to complete the work in strict accordance with the Contract Documents as defined in Article 2 of this Agreement, and perform all work that is reasonably inferable therefrom as being necessary to accomplish the intent of the Contract Documents, and as required by the manufacturer's specifications and all applicable laws, ordinances and rules and regulations of any governing authority including but not limited to the requirements of the Florida Building Code and any amendments thereto. The work to be performed shall hereinafter be referred to as the "Work".

The Work is generally described as follows: The rehabilitation, maintenance, and new well construction for the Village of Wellington Surficial Aquifer System wellfield and existing production wells. Scope shall be generated, phase by phase, by the Village as needed.

**ARTICLE 2 - CONTRACT DOCUMENTS**

The Contract Documents, which comprise the entire Agreement between Owner and Contractor concerning the Work, consist of the following:

2.1 This Agreement;

2.2 Addenda numbers: NONE

2.3. General Conditions attached hereto as **Exhibit "A"**;

2.4 Signing Authority to Agreement attached hereto as **Exhibit "B"**;

2.5 Drawings, plans or technical specifications are attached hereto as **Exhibit "C"**;

2.6 Performance Bond and Payment Bonds in the forms attached hereto as **Exhibit "D"** which shall be in compliance with Fla. Stat. § 255.05 (plus Power of Attorney Forms as applicable);

2.7 Notice of Award attached hereto as **Exhibit "E"**;

2.8 Sales Tax Recovery Program Special Conditions For Owner Furnished Materials and Equipment attached hereto as **Exhibit "F"**;

2.9 Contractor's Schedule of Values attached as **Exhibit "G"**;

2.10 Contractor's Certificate(s) of Insurance attached hereto as **Exhibit "H"**;

2.11 Warranty Forms attached hereto as **Exhibit "I"**;

2.12 Form of Certificate of Substantial Completion attached hereto as **Exhibit "J"**;

2.13 Form of Application for Payment attached hereto as **Exhibit "K"**;

2.14 Form of Bill of Sale, Absolute attached hereto as **Exhibit "L"**;

2.15 Form of Contractors affidavit to Owner and Final Release of Liens, attached hereto as **Exhibit "M"**;

2.16 Contractor's Forms and Misc. Requirements attached hereto as **Composite Exhibit "N"**:

| | |
|---|---|
| **Exhibit "N1"** | Conflict of Interest Statement |
| **Exhibit "N2"** | Non-Collusion Affidavit |
| **Exhibit "N3"** | Certification Pursuant to Florida Statute 287.135 and 215.4725 |

2.17 Sales Tax Exemption Certificate of Entitlement attached hereto as **Exhibit "O";**

2.18 The following which may be delivered or issued after the Effective Date of the Agreement may not be attached hereto: Notice to Proceed, all written amendments and Change Orders signed by both parties and other documents amending, modifying, or supplementing the Contract Documents pursuant to paragraph 3.04 of the General Conditions.

2.19 The Contract Documents listed under Article 2 above are attached to this Agreement (except as expressly noted otherwise above) and include any documents referenced in the Agreement or Contract Documents to be incorporated by reference. There are no Contract Documents other than those listed above in this Article 2. The Contract Documents may only be amended, modified or supplemented as provided in paragraph 3.04 of the General Conditions. The Contract Documents shall be interpreted together and in harmony with one another. In the event of a conflict between or among the Contract Documents, whichever document imposes the greater obligation on Contractor shall control. The Contractor must call any such conflict or discrepancy to the Village's attention, in writing or the Contractor waives and releases any claims it might have related to such conflict, unless otherwise stated herein. The Contractor shall not proceed when in doubt as to any dimension or measurement but shall seek clarification from the Engineer (defined below).

**ARTICLE 3 - ENGINEER**

Notwithstanding anything contrary to language contained in the Agreement, the roles and responsibilities of the Owner and Engineer during construction are as follows:

The Owner will serve as the Owners Representative. All communication relative to Contractors obligation under Agreement shall be through the Owner. The Owner will act as the Engineer during construction unless otherwise notified by Owner. The responsibilities of the Engineer are in Article 9 of the of the General Conditions.

**ARTICLE 4 – TERM, TIME OF COMMENCEMENT AND COMPLETION**

4.1 The term of the contract shall be for three (3) years from date of award, and by mutual agreement between Wellington and the awardee(s), be renewable for two (2) additional one (1) year periods. Wellington reserves the right to exercise the option to renew (subject to the appropriation of funds), not to exceed a maximum of two (2) year renewals. Renewals will be based upon mutual agreement between Wellington and vendor, and by incorporating the same terms and conditions. Renewals will be by a written notice from Wellington, and acceptance by the awarded vendor(s). The written notice will generally be provided about ninety (90) days prior to the contract expiration date. The pricing submitted for the initial period of the contract will remain fixed. There will be no allowable price escalations for services, materials, or fuel costs throughout the initial term of the contract.

4.2 The time of commencement of the Work shall be the date stated in the Notice to Proceed, as defined in the General Conditions ("Date of Commencement"). Specific contract time shall be determined on a phase by phase basis., subject to any authorized extensions of time as set forth in the Article 12 of the General Conditions. All Work shall be performed in an expeditious manner. Contractor shall reach Final Completion of all Work as specified in the Notice to Proceed and delivery of the Final Punch List as required by the Contract Documents.

4.3 LIQUIDATED DAMAGES. The parties to this Agreement agree that time is of the essence in the performance of this Agreement. Substantial Completion of the Work under this Agreement, as defined in Article 1 of **Exhibit "A",** shall be no later than the Substantial Completion date set forth in Section 4.1 of this Agreement, subject to authorized extensions of time as set forth in the Article 12 of the General Conditions. In the event the Work is not substantially completed by the completion date stated above, and has not been extended by Change Order, the Owner shall be entitled to collect liquidated damages. Contractor and Owner agree that, because of the nature of the Work, the inability of the parties to precisely calculate actual damages for delay and the difficulty of determining these damages, the Contractor shall pay the Owner the sum of Five Hundred Dollars ($500.00) for each calendar day in achieving Substantial Completion of the Work. Further, Contractor and Owner agree that, because of the nature of the Work, the inability of the parties to precisely calculate actual damages for delay and the difficulty of determining these damages, the Contractor shall pay the Owner the sum of Two Hundred Fifty Dollars ($250.00) for each and every calendar day of unexcused delay for failure to achieve Final Completion. It is hereby agreed that the amount of the per diem assessment for liquidated damages for the Contractor's failure to achieve Substantial Completion of the Work or Final Completion of the Work within the time specified in this Agreement is not a penalty and not excessive in light of the circumstances known to the parties at the time this Agreement is executed. The Owner's exercise of its right to terminate this Agreement shall not release the Contractor from its obligation to pay liquidated damages in the amount set forth herein. Such assessments shall be immediately due and payable to the Owner or, at the Owner's option, may be deducted from future payments that may be due and owing to Contractor. Any sums due and payable hereunder by the Contractor shall be payable, not as a penalty, but as liquidated damages representing an estimate of delay damages likely to be sustained by the Owner, estimated at or before the time of executing this Agreement. Contractor's liability for liquidated damages shall survive completion and termination of the Agreement and are in addition to Owner's other remedies available under the Contract Documents and by law.

**ARTICLE 5 - CONTRACT SUM**

The Owner shall pay the Contractor for the cost of each project, authorized by the Owner through the issuance of a Notice to Proceed, based upon the unit prices set forth in the Schedule of Values, inclusive of all licenses, taxes and fees. If any permits are required for the performance of the Work from any governing authorities having jurisdiction over the Project, Contractor shall be responsible for obtaining all required permits and the Owner shall pay for the actual cost for such permits as part of the Contract Sum. The Ownerdoes not guarantee any minimum amount in contract price nor any minimum number of projects.

**ARTICLE 6 - PAYMENT PROCEDURES**

Contractor shall submit Applications for Payment in accordance with Article 14 of the General Conditions. Applications for Payment will be processed and reviewed by Owner and Engineer as provided in Article 14 of the General Conditions.

6.1. PROGRESS PAYMENTS. Pursuant to Article 14 of the General Conditions, Owner shall make progress payments on account of the Work performed, including any Unit Price Work, on the basis of Contractor's Applications for Payment (**Exhibit "K**") as recommended by Engineer, on or about the **10th** day of each month during construction as provided below. All progress payments will be on the basis of the percentage of completion and progress of the Work, and in the case of Unit Price Work based on the price per unit multiplied by the number of units completed, measured by the Schedule of Values established pursuant to Paragraph 2.05 of the General Conditions and **Exhibit "G"** attached to this Agreement.

6.1.1. Prior to successful completion of 50% of the Work, progress payments will be made in an amount equal to the percentage indicated below, but, in each case, less the aggregate of payments previously made and less such amounts as Engineer shall determine, or Owner may withhold, in accordance with Paragraph 14.02 of the General Conditions.

Ninety percent (90%) of Work completed and zero percent (0%) of materials and equipment not incorporated in the Work (but delivered, suitably stored and accompanied by documentation satisfactory to Owner as provided in Paragraph 14.02.A of the General Conditions).

6.1.2. Upon successful completion of 50% of the work, progress payments will be made in an amount equal to ninety-five percent (95%) of the Work completed, but, in each case, less the aggregate of payments previously made and less such amounts as Engineer shall determine, or Owner may withhold, in accordance with Paragraph 14.02 of the General Conditions.

6.1.3 Owner is not obligated to reduce the retainage for any amounts that are the subject of a good faith dispute, the subject of a claim brought pursuant to Section 218.735, Florida Statutes, Section 255.05, Florida Statutes, or for any amounts that are otherwise the subject of a Claim or demand by the Owner against the Contractor under this Agreement. After 50% completion of the Work, the Contractor may submit to the Owner an Application for Payment for up to 50% of the retainage withheld by the Owner through the date of the Application for Payment. The Owner shall promptly make such payment to the Contractor unless the Owner has grounds to withhold payment for amounts that are the subject of a good faith dispute, the subject of a Claim pursuant to Section 218.735, Florida Statutes, Section 255.05, Florida Statutes, or are otherwise the subject of a Claim or demand by the Owner against the Contractor. If the Owner makes payment of retainage to the Contractor, which is attributable to the labor, services, or materials supplied by one or more Subcontractors or suppliers, the Contractor shall timely remit payment of such retainage to those Subcontractors and suppliers. Upon Substantial Completion of the Work, and the completion of the punch list, the amount of retainage shall be reduced to the value of 150% of the total cost to complete any disputed items on the punch list, which shall be deducted from any amounts due.

6.2. FINAL PAYMENT. Upon final completion and acceptance of the Work in accordance with Paragraph 14.07 of the General Conditions, and settlement of all Claims, Owner shall pay the remainder of the Contract Price as recommended by Engineer as provided in said paragraph 14.07 of the General Conditions.

**ARTICLE 7 - CONTRACTOR'S REPRESENTATIONS**

In order to induce Owner to enter into this Agreement, Contractor makes the following representations:

7.1 Contractor has familiarized itself with the nature and extent of the Contract Documents, Work, Site, locality, and all local conditions, Laws, and Regulations that in any manner may affect the cost, progress, performance, or furnishing of the Work.

7.2. Contractor has obtained and carefully studied (or assumes responsibility for obtaining and carefully studying) all such examinations, investigations, explorations, tests, reports and studies which pertain to the subsurface conditions at or contiguous to the Site or otherwise may affect the cost, progress, performance or furnishing of the Work as Contractor considers necessary for the performance or furnishing of the Work at the Contract Price, within the Contract Time and in accordance with the other terms and conditions of the Contract Documents, including specifically the provisions of paragraph 4.03 of the General Conditions; and no additional examinations, investigations, explorations, tests, reports, studies or similar information or data are or will be required by Contractor for such purposes.

7.3. Contractor has obtained and carefully studied (or assumes responsibility for obtaining and carefully studying) all examinations, investigations, explorations, tests, reports and studies which pertain to the physical conditions at or contiguous to the Site or otherwise may affect the cost, progress, performance or furnishing of the Work as Contractor considers necessary for the performance or furnishing of the Work at the Contract Price, within the Contract Time and in accordance with the other terms and conditions of the Contract Documents, and no additional examinations, investigations, explorations, tests, reports, studies or similar information or data are or will be required by Contractor for such purposes.

7.4. Contractor has given Owner written notice of all conflicts, errors or discrepancies that he has discovered in the Contract Documents and the written resolution thereof by Owner is acceptable to Contractor.

7.5 The Contract Documents are generally sufficient to indicate and convey understanding of all terms and conditions for performance and furnishing of the Work.

7.6 Contractor represents that it is a properly qualified and licensed contractor in good standing with the State of Florida and is a Florida General Contractor in good standing, organized and existing under the laws of the State of Florida. Contractor further represents that it is well qualified and able to perform the Work; it has a sufficient number of qualified personnel to assure timely performance of the Work; that it has the proper tools and equipment to perform the Work and is financially capable of performing the Work and all the requirements stated within the Contract Documents.

7.7 Contactor represents that all Work will be of first quality, free from faults and defects and in conformance with the Contract Documents. All Work not so conforming to these standards may be considered defective. The Contractor shall supervise and direct the Work using its best skill and attention. All Work shall be performed by craftsmen skilled in the trades and application of materials involved. The Contractor shall be responsible for initiating, maintaining and supervising all safety precautions and programs in connection with the Work and shall comply with all OSHA regulations regarding job safety and all applicable laws, ordinances, rules, regulations and orders of any public authority having jurisdiction for the safety or persons or property.

**ARTICLE 8 - INDEMNIFICATION**

8.1 Subject to Paragraph 6.20 of the General Conditions, to the fullest extent permitted by the law, Contractor shall indemnify and hold harmless the Owner, and its council members, officers, directors, agents, members and employees and Engineer and its officers, directors, agents, members and employees ("Indemnified Parties"), from liabilities, damages, losses, and costs, including, but not limited to, reasonable attorneys' fees at the trial and appellate level, but only to the extent caused by the negligence, recklessness, wrongly or intentionally wrongful conduct, act or omission of the Contractor and other persons employed or utilized by Contractor, any of Contractor's Subcontractors, agents or others for whom the Contractor is responsible, arising from this Agreement or its performance. The Owner's contributory negligence shall only reduce, but not prevent, the Contractor's obligation to indemnify provided herein. Nothing in the Contract Documents shall be construed or interpreted as consent by the Owner to be sued, nor as a waiver of sovereign immunity beyond the waiver or limits provided in §768.28, Florida Statutes.

8.2 In any and all claims against Indemnified Parties by any employee (or the survivor or personal representative of such employee) of Contractor, any Subcontractor, any Supplier, or any individual or entity directly or indirectly employed by any of them to perform any of the Work, or anyone for whose acts any of them may be liable, the indemnification obligation under Paragraph 8.1 shall not be limited in any way by any limitation on the amount or type of damages, compensation, or benefits payable by or for Contractor or any such Subcontractor, Supplier, or other individual or entity under workers' compensation acts, disability benefit acts, or other employee benefit acts.

8.3 The parties intend for this indemnification provision to be enforceable pursuant to Sections 725.06 and 725.08, Florida Statutes and as such, hereto acknowledge and agree that to the extent that any portion of this indemnification provision is deemed void or unenforceable in any action or proceeding, then such portion is considered severable and will not affect the remaining portions of this provision. The Contractor shall indemnify and hold harmless all of the Indemnified Parties from and against any costs and expenses (including reasonable attorneys' fees) incurred by any of the Indemnitees in enforcing any of the Contractor's indemnity and hold-harmless obligations under this Contract. This indemnification provision does not extend to provide indemnification to the Indemnified Parties for their own negligence and therefore, the parties agree that the indemnification obligations should be construed in accordance with Sections 725.06 and 725.08, Florida Statutes.

8.4 The indemnity provisions of this Article 8 shall survive termination and completion of the Agreement.

**ARTICLE 9 – SUBCONTRACTS**

No portion of the Work may be subcontracted to vendors not listed on the Schedule of Subcontractor without the prior written consent of the Village, which consent may be withheld for any reason. It is further agreed that all subcontracts and material and equipment purchase contracts entered into by Contractor or its subcontractors or material suppliers, shall contain a provision stating that the Owner may bring claim directly against any subcontractor of Contractor for breach of Contract, warranty rights, quality of workmanship, and create third party beneficiary rights of Owner in said agreements. Additionally, nothing contained in this Contract shall constitute an assignment of Contractor's rights against the Owner or create any third party beneficiary rights in any

subcontractors or material and equipment suppliers of Contractor. The purpose of this provision is to allow the Owner, in addition to Contractor, to make claim for damage or indemnification directly against any subcontractors or material and equipment suppliers that may be ultimately responsible for defects or deficiencies in the Work or materials and equipment.

**ARTICLE 10 – TIME & DELAYS**

Any changes in the Work, changes in the Contract Price and/or Contract Time shall be executed via written Change Order pursuant to Articles 10 and 12 of the General Conditions. Further, if the Contractor is delayed at any time in the progress of the Work, any approved changes in the Contract Time shall similarly be executed via written Change Order pursuant to Article 12 of the General Conditions. All requests by the Contractor for extensions of the Contact Time, other than those associated with changes in the Work, must be submitted in writing to Owner's Representative within the time period specified in Article 12 of the General Conditions. Failure to so request an extension of the Contract Time will constitute a waiver of any right for an extension of the Contract Time.

**ARTICLE 11 – BONDS AND INSURANCE**

The Contractor shall furnish performance and payment bonds pursuant to Article 5 of the General Conditions. The Contractor shall also, as a condition of this Agreement and to payment under this Agreement, purchase and maintain the insurance coverage and policy limits as delineated within Paragraph 5.04 of the General Conditions and the Supplementary Conditions.

**ARTICLE 12 – SALES TAX INFORMATION**

The Owner Sales Tax Recovery Program Special Conditions are incorporated herein by reference. To be entitled to purchase materials tax exempt for a public works project, the Owner is required to issue a Certificate of Entitlement to each vendor and to the Contractor to affirm that the tangible personal property purchased from that vendor will go into or become a part of a public work. The Owner's purchase order for tangible personal property to be incorporated into the public works project must be attached to the Certificate of Entitlement. The Owner must issue a separate Certificate of Entitlement for each purchase order. The Owner's form Certificate of Entitlement is attached hereto as **Exhibit "O".** By executing each Certificate of Entitlement, the Owner affirms that the purchase of the tangible personal property contained in the attached Purchase Order meets the applicable exemption requirements contained in Section 212.08(6), Florida Statutes, and Rule 12A-1.094, F.A.C. If the personal property sold by a vendor tax-exempt pursuant to a Certificate of Entitlement does not qualify for the exemption under Section 212.08(6), Florida Statutes, and Rule 12A-1.094, F.A.C., the Owner will be liable for any tax, penalty, and interest determined to be due.

**ARTICLE 13 -** This space left blank intentionally.

**ARTICLE 14 – CONFLICT OF INTEREST**

This Agreement is subject to any and all applicable conflict of interest provisions found in the policies or Code of Ordinances of the Village of Wellington, the Palm Beach County Code of Ethics and Ch. 112, Part III, Florida Statutes. The Contractor's completed Conflict of Interest Statement shall be attached hereto and incorporated herein as **Exhibit "N1"**. During the term of this Agreement and any renewals or extensions thereof, the Contractor shall continue to disclose to Owner any possible conflicts of interests. The Contractor's duty to disclose is of a continuing nature and any conflict of interest shall be immediately brought to the attention of Owner.

**ARTICLE 15 – TRANSFER OF LIEN**

In the event any liens should be filed against the Site by any lienors, in connection with labor or services performed, Contractor shall indemnify and hold the Owner harmless against all such liens and suits or other proceedings pertaining thereto including any and all costs and attorneys' fees, at both the trial and appellate level. If any such liens are filed then Contractor must forthwith within twenty (20) days of notice of the lien, transfer such lien to security in accordance with Florida Statutes. Should Contractor fail to transfer such lien, the Owner may, at its option, do so and deduct the amount expended, including all costs and attorney's fees incurred from any payment then due Contractor.

**ARTICLE 16 – DISPUTE RESOLUTION**

16.1 If the parties mutually agree, any disputes not resolved by the Initial Decision Maker as provided in the General Conditions, may be referred to mediation. However, mediation shall not be a condition precedent to litigation of any disputes. All costs of mediation shall be shared equally by the parties. Venue for litigation concerning this Agreement or the Contract Documents shall be in Palm Beach County, Florida. In the event of litigation to settle disputes arising out of this Agreement or the Project, the prevailing party shall be entitled to recover against the other party its cost and expenses, including reasonable attorney's fees, which shall include any fees and costs attributable to appellate proceedings arising on and of such litigation.

**16.2 Waiver of Trial By Jury.** IN THE EVENT OF LITIGATION, BOTH PARTIES HEREBY KNOWINGLY, IRREVOCABLY, VOLUNTARILY, AND INTENTIONALLY WAIVE ANY RIGHT EITHER PARTY MAY HAVE TO A TRIAL

BY JURY IN RESPECT OF ANY ACTION, PROCEEDING, CLAIM, OR COUNTERCLAIM ARISING OUT OF OR RELATING TO THE CONTRACT, OR BREACH THEREOF, OR IN CONNECTION WITH WORK OR ANY COURSE OF CONDUCT, COURSE OF DEALING, STATEMENTS (WHETHER VERBAL OR WRITTEN), OR ANY ACTIONS OR INACTIONS OF EITHER PARTY.

**ARTICLE 17 – MISCELLANEOUS**

17.1 Terms used in this Agreement, which are defined in Article 1 of the General Conditions, will have the meanings indicated in the General Conditions.

17.2 **Public Entity Crime Statement.** Contractor acknowledges the existence of Section 287.133(2)(a), Florida Statutes ("Public Entity Crimes Act"), which provides, in part, that a person or affiliate who has been placed on the convicted vendor list following a conviction for a public entity crime may not submit a bid on a contract to provide any goods or services to Owner, may not submit a bid on a contract with Owner for the construction or repair of a public building or public work, may not submit bids on leases of real property to Village, may not be awarded or perform work as a Contractor, supplier, Subcontractor, or Consultant under a contract with Village, and may not transact business with Owner in excess of the threshold amount provided in Section 287.017, Florida Statutes, for CATEGORY TWO for a period of thirty-six (36) months from the date of being placed on the convicted vendor list. Violation of this Section by Contractor shall result in termination of this Agreement by Owner without penalty.

17.3 **Truth-In-Negotiation Certificate.** Signature of this Agreement by Contractor shall act as the execution of a truth-in-negotiation certificate stating that wage rates and other factual unit costs supporting the compensation of this Agreement are accurate, complete, and current at the time of contracting. The original Contract Price and any additions thereto shall be adjusted to exclude any significant sums, by which Owner determines the Contract Price was increased due to inaccurate, incomplete, or noncurrent wage rates and other factual unit costs. All such contract adjustments shall be made within one (1) year following the end of this Agreement.

17.4 **Records.** Contractor shall keep such records and accounts and require any and all architects, Consultants, and Subcontractors to keep records and accounts as may be necessary in order to record complete and correct entries as to personnel hours charged to this engagement. Such books and records will be available at all reasonable times for examination and audit by Owner and for the required retention period of the Florida Public Records Act (Chapter 119, Florida Statutes), if applicable, or if the Florida Public Records Act is not applicable, for a minimum period of three (3) years after termination of this Agreement. If any audit has been initiated and audit findings have not been resolved at the end of the retention period or three (3) years, whichever is longer, the books, records, and accounts shall be retained until resolution of the audit findings.

**IF THE CONTRACTOR HAS QUESTIONS REGARDING THE APPLICATION OF CHAPTER 119, FLORIDA STATUTES, OR TO THE CONTRACTOR'S DUTY TO PROVIDE PUBLIC RECORDS RELATING TO THIS CONTRACT, CONTACT THE CUSTODIAN OF PUBLIC RECORDS, CHEVELLE D. ADDIE AT 561-791-4000, CADDIE@WELLINGTONFL.GOV , 12300 FOREST HILL BLVD. WELLINGTON, FL 33414.**

17.5 In accordance with Palm Beach County Ordinance Number 2011-009, this Agreement may be subject to investigation and/or audit by the Palm Beach County Inspector General. The Contractor has reviewed Palm Beach County Ordinance Number 2011-009 and is aware of its rights and/or obligations under such ordinance.

17.6 **Village of Wellington's Purchasing and Procurement Procedures Manual.** Contractor shall comply with all Contractor requirements of the Village of Wellington's Purchasing and Procurement Procedures Manual as adopted by Resolution No. R2014-12.

17.7 **Local Preference.** Except where prohibited by federal or state law, other funding source restrictions, or as otherwise excluded by the Village of Wellington's Local Preference Policy, if Contractor represented itself as a Palm Beach County Local Business or Western Communities Local Business in accordance with the Village of Wellington's Local Preference Policy, Contractor shall be obligated to maintain such status in accordance with eligibility requirements of Village of Wellington's Local Preference Policy through final completion of the Project. In the event Contractor qualified for Local Preference by subcontractor participation, the Contractor shall maintain the local subcontractor(s) identified in its response to the Owner's Invitation to Bid and shall not replace same without the prior written consent of the Owner. In the event Contractor needs to replace a local subcontractor, said subcontractor shall be replaced with another subcontractor, which meets the eligibility requirements of the Village of Wellington's Local Preference Policy, unless expressly agreed in writing by the Owner.

17.8 **Code of Ethics & Conduct.** If Contractor violates or is a party to a violation of the Florida Statutes Chapter 112 or the Palm Beach Code of Ethics (Sec. 2-441 et. seq), Contractor may be in material breach of this Agreement and may be disqualified from bidding on any future bids for work of goods with the Owner.

17.9 **Non-Collusion.** This Agreement is made without collusion or fraud. No premiums, rebates, or gratuities are permitted with, prior to, or after any delivery of material or provisions of services. Any violation of this provision may result in termination of this Agreement, return of materials or discontinuation of services, and the possible removal of Contractor for bidder lists.

17.10 **Drug-Free Workplace**. Execution of this Agreement by Contractor shall serve as Contractor's certification that it either has or that it will establish a drug-free workplace consistent with Chapter 112.0455, Florida Statutes.

17.11 As part of the Village's National Pollutant Discharge Elimination System (NPDES) requirements, Contractor may be required to achieve training which may include but not be limited to a live presentation and/or video presentation. Contractor is responsible for all costs associated with the training.

17.12 **Traffic Control and Maintenance**. To the extent applicable, the Contract Price includes all traffic control and traffic control costs related to the Work. The Maintenance of Traffic Plan and all traffic warning and control devices shall conform to the applicable provisions of the latest editions of the national "Manual On Uniform Traffic Control Devices" (MUTCD), and the 600 series of the Florida Department of Transportation's "Roadway and Traffic Design Standards". The MOT Plan shall be prepared by a Florida MOT Certified Technician if FDOT standard details are used. If FDOT standard details are not used, a Professional Engineer licensed in Florida shall prepare the MOT Plan. MOT Plans shall be submitted to appropriate agencies for approval. Costs of compliance with this Paragraph are included as part of the Contract Price.

17.13 **Existing Structures & Utilities**. All known utilities have been shown on the Plans and Drawings or otherwise provided in the Contract Documents according to the best information available. It is the Contractor's responsibility to contact all owners of structures or utilities above ground, on the surface, or below the ground, within the Project area so that said owners may stake, otherwise make, or protect their facilities. When structures and utilities have been properly shown or marked and are disturbed or damaged in the execution of the Work, they must be repaired immediately at Contractor's sole cost and expense in conformance with best standard practice and the approval of the owner of the damaged utility or structure. In the case of structures and utilities which have not been properly shown or located as outlined above and are disturbed or damaged in the prosecution of the Work, Contractor shall take whatever steps are necessary for safety and notify the affected utility owner and avoid any actions which might cause further damage to the structure or utility. Should the Work require repairs, changes, or modifications of the Owner's utilities as well as other utilities, it is the responsibility of the Contractor to provide for the maintenance of continuous water, sewage, electric, telephone and other utility services to all present customers of such utilities, unless approval in writing is secured from the applicable utility company or Owner for interruption of such service.

17.14 **Testing**. All tests and analyses, which are called for in the Specifications and/or Drawings to be performed by an Independent Testing Laboratory or otherwise, will be at the Owner's expense unless otherwise specified, provided the tests and analyses determine that the material(s) and/or Work meets the requirements as specified. All such tests that fail to meet the Project requirements are to be paid by the Contractor.

17.15 **Storage Site.** The Contractor shall furnish, at its expense, properly zoned area suitable for field offices, material storage and equipment service and storage, as applicable for the Project. The Contractor shall maintain these areas in a clean, orderly condition so as not to cause of nuisance in the area and shall restore the storage areas to its original or better condition.

17.16 The undersigned Contractor does hereby confirm to the Owner and Engineer that the Contractor has reviewed the provisions of Chapter 556, Florida Statutes, and has provided to "Sunshine State One-Call of Florida, Inc." the information required under F.S. 556.105 before the commencement of any excavation or demolition required for the Work.

17.17 **Compliance with Laws.** The Contractor shall give all notices, and warrants and represents that the Work will comply with all federal, state and local laws, ordinances, rules, regulations, and orders of any public authority having jurisdiction over the Work. Contractor shall comply with all ordinances, laws and rules of the State of Florida, Village of Wellington and Palm Beach County applicable to the Work. Contractor shall be liable for any deviation from any laws, ordinances, rules, regulations, and orders of any public authority even if in strict compliance with the Contract Documents. Contractor shall bear sole responsibility for and bear all costs necessary to insure full compliance with the representations contained herein, including, but not limited to any attorney's fees or other expenses incurred by Owner in responding to any complaints, citations, court orders, administrative orders or similar governmental edicts or process. The provisions of this paragraph shall survive the termination of this Agreement.

17.18 The Contractor acknowledges that the Florida Doctrine of Sovereign Immunity bars all claims by Contractor against the Owner other than Claims arising out of this Agreement. Specifically, except as provided in Section 768.28, Florida Statutes, the Contractor acknowledges that it cannot and will not assert any claims against the Owner, unless the claim is based upon a breach by the Owner of this Agreement.

17.19 The Contractor affirms that the provisions of the Contract Documents regarding notice to Claims, and the requirement for a written Change Order cannot be waived and further, without timely notice of a Claim or a written Change Order as required in the Contract Documents,, the Contractor shall not be entitled to additional compensation or an extension of the Contract Time. Such Claims for additional compensation or extensions of the Contract Time are waived if the Contractor has not given all required notices and obtained a written a Change Order when required.

17.20 No assignment by a party hereto of any rights under or interests in the Contract Documents will be binding on another party hereto without the written consent of the party sought to be bound; and specifically but without limitation monies that may become due and moneys that are due may not be assigned without such consent (except to the extent that the effect of this restriction may be limited by law), and unless specifically stated to the contrary in any written consent to an assignment no assignment will release or discharge the assignor from any duty or responsibility under the Contract Documents.

17.21 Owner and Contractor each binds itself, its partners, successors, assigns and legal representatives to the other party hereto, its partners, successors, assigns and legal representatives in respect of all covenants, agreements and obligations contained on the Contract Documents.

17.22 Any provision or part of the Contract Documents held to be void or unenforceable under any Law or Regulation shall be stricken, and all remaining provisions shall continue to be valid and binding upon Owner and Contractor, who agree that the Contract Documents shall be reformed to replace such stricken provision or part thereof with a valid and enforceable provision that comes as close as possible to expressing the intention of the stricken provision.

17.23 The failure of either party hereto to insist, in any one or more instances, upon the performance of any of the terms, covenants or conditions of this Agreement, or to exercise any right herein, shall not be construed as a waiver or relinquishment of such term, covenant, condition or right as respects further performance.

17.24 This Agreement may not be amended or modified except by an instrument in writing signed by the party against whom enforcement of such amendment or modification is sought.

17.25 This Agreement may be executed in any number of counterparts with the same effect as if all parties hereto had signed the same document. All such counterparts shall be construed together and shall constitute one instrument.

17.26 **Site Security.** Security at the site is a very high priority to the Owner. The Contractor recognizes that this site is sensitive in nature as a result of homeland security concerns, and the security criteria stipulated herein constitutes a material inducement of the Owner to enter into this contract with the Contractor. In recognition of the Owner's security needs and the fact that this is an active and functioning facility, the Contractor agrees to take all reasonable steps to minimize the degree to which the facility is impacted by this construction project. The Owner reserves the right to require timing adjustment of activities that, in the sole determination of the Owner, impact the operation, efficiency or security of the Plant. The Contractor shall anticipate and work within the requirements of the Owner's security needs.

The Owner reserves the right to require the Contractor to perform a background check on all of Contractor's agents, licensees, invitees, employees, subcontractors, material workers, and suppliers entering the site and agrees to supply the results to the Owner. Contractor shall secure from the affected parties appropriate authorizations and releases from liability in favor of the Owner prior to performing the background checks. All background checks shall be performed prior to allowing the workers or suppliers access to the project site. The Owner reserves the right but not the obligation to disallow entrance to the work site of any persons or entities as a result of the background check or other relevant information, regardless of the result of such background check.

Background checks shall be in such form and fashion as is acceptable to the Owner, but at a minimum, shall be performed through the Florida Department of Law Enforcement. The Contractor shall allow sufficient time to perform the necessary background checks within the project schedule. Nothing herein shall be construed as consent to be sued by third parties and Contractor waives all claims for damages based upon the security measures set forth herein. Each third party upon whom a background check has been performed shall be required to carry a photo identification and a clearance tag. Such identification and clearance tag shall be required to enter the Plant and shall be maintained with the person at all times while on site. The Contractor shall provide to the Owner a complete roster of all parties who may enter the work site to perform the work called for by this agreement and shall keep said roster updated and current on at least a monthly basis.

**ARTICLE 18 – NOTICE**

Whenever either party desires to give notice unto the other, it must be given by written notice, sent by certified United States mail, with return receipt requested, addressed to the party for whom it is intended, at the place last specified; and the place for giving of notice shall remain such until it shall have been changed by written notice in compliance with the provisions of this paragraph. For the present, the parties designate the following as the respective places for giving of notice, to-wit:

For Owner:
Chevelle D. Addie, Village Clerk
Village of Wellington
12300 Forest Hill Blvd.
Wellington, FL 33414

For Contractor
Michael Black
Florida Design Drilling Corporation
7733 Hooper Road
West Palm Beach, FL 33411

**ARTICLE 19 – COUNTERPARTS**

This Agreement may be executed in two or more counterparts, each of which shall be deemed an original, but all of which together shall constitute one and the same instrument.

IN WITNESS WHEREOF, Owner and Contractor have signed this Agreement. One counterpart each has been delivered to Owner, Contractor, and the Engineer. All portions of the Contract Documents have been signed or identified by Owner and Contractor or by the Engineer on their behalf.

OWNER: **VILLAGE OF WELLINGTON**

By _____
Anne Gerwig, Mayor

Attest: _____
Chevelle D. Addie, Wellington's Clerk

(SEAL)

APPROVED AS TO FORM AND
LEGAL SUFFICIENCY

_____
Laurie Cohen, Attorney for Wellington

CONTRACTOR: **FLORIDA DESIGN DRILLING CORPORATION**

By _____

Printed Name/Title Michael Black - Senior Vice President

Attest: _____
Brandon Holst – Project Manager

(CORPORATE SEAL)

FLORIDA DESIGN DRILLING CORPORATION
CORPORATE SEAL
April 23 2005
FLORIDA

**EXHIBIT "A"**

STANDARD GENERAL CONDITIONS OF THE CONSTRUCTION CONTRACT

TABLE OF CONTENTS


Article 1 – Definitions and Terminology

1.01 Defined Terms ……
1.02 Terminology ……...

Article 2 – Preliminary Matters

2.01 Delivery of Bonds and Evidence of Insurance ……..
2.02 Copies of Documents …….
2.03 Starting the Work ……
2.04 [Paragraph Intentionally Deleted] ……..
2.05 Before Starting Construction ……..
2.06 Preconstruction Conference; Designation of Authorized Representatives …….
2.07 Initial Acceptance of Schedules …….

Article 3 – Contract Documents: Intent, Amending, Reuse

3.01 Intent ……
3.02 Reference Standards ……
3.03 Reporting and Resolving Discrepancies …….
3.04 Amending and Supplementing Contract Documents …….
3.05 Reuse of Documents & Electronic Data ……

Article 4 – Availability of Lands; Subsurface and Physical Conditions; Hazardous Environmental Conditions; Reference Points

4.01 Availability of Lands ……
4.02 Subsurface and Physical Conditions ……
4.03 Differing Subsurface or Physical Conditions ……..
4.04 Underground Facilities ……
4.05 Reference Points ……..
4.06 Hazardous Environmental Condition at Site ……

Article 5 – Bonds and Insurance

5.01 Performance, Payment and Other Bonds …….
5.02 Licensed Sureties and Insurers ……
5.03 Certificates of Insurance …….
5.04 Contractor's Insurance ……
5.05 Limits of Liability insurance. ……...
5.06 Subcontractor Insurance ……...
5.07 Acceptance of Bonds and Insurance; Option to Replace ……..
5.08 Partial Utilization; Acknowledgement of Property Insurer ……

Article 6 – Contractor's Responsibilities

6.01 Supervision and Superintendence ……
6.02 Labor; Working Hours …….
6.03 Services, Materials and Equipment …….
6.04 Progress Schedule ……
6.05 Substitutes and "Or-Equals" ……

6.06 Concerning Subcontractors, Suppliers and Others ……
6.07 Patent Fees and Royalties ……
6.08 Intentionally Deleted……
6.09 Laws and Regulations ……
6.10 Taxes ……
6.11 Use of Site and Other Areas ……
6.12 Record Documents ……
6.13 Safety and Protection ……
6.14 Safety Representative ……..
6.15 Hazard Communication Programs ……
6.16 Emergencies ……
6.17 Shop Drawings and Samples ……
6.18 Continuing the Work ……
6.19 Contractor's General Warranty and Guarantee ……
6.20 Delegation of Professional Design Services……

Article 7 – Other Work at the Site

7.01 Related Work at Site ……
7.02 Coordination ……
7.03 Legal Relationships ……

Article 8 – Owner's Responsibilities

8.01 Communications to Contractor ……
8.02 Replacement of Engineer ……
8.03 Furnish Data ……
8.04 Limitations of Owner's Responsibility ……
8.05 Evidence of Financial Arrangements ……
8.06 Compliance with Safety Program ……

Article 9 – Engineer's Status During Construction

9.01 Owner's Representative ……
9.02 Visits to Site ……
9.03 Project Representative ……
9.04 Authorized Variations in the Work ……..
9.05 Rejecting Defective Work ……
9.06 Shop Drawings, Change Orders and Payments ……
9.07 Determinations for Unit Price Work ……
9.08 Decisions on Requirements of Contract Documents and Acceptability of Work ……...
9.09 Limitations on Engineer's Authority and Responsibilities ……..
9.10 Compliance with Safety Program ……

Article 10 – Changes in the Work; Claims

10.01 Authorized Changes in the Work ……
10.02 Unauthorized Changes in the Work ……
10.03 Execution of Change Orders & Construction Change Directives ……
10.04 Notification to Surety ……..
10.05 Claims ……..

Article 11 – Allowances; Unit Price Work

11.01 Allowances ……
11.02 Contingency ……

11.03 Unit Price Work ……

Article 12 – Change of Contract Price; Change of Contract Time

12.01 Change of Contract Price ……
12.02 Change in Contract Time ……
12.03 Delays ……

Article 13 – Tests and Inspections; Correction, Removal or Acceptance of Defective Work

13.01 Notice of Defects ……
13.02 Access to Work ……..
13.03 Tests and Inspections ……
13.04 Uncovering Work ……..
13.05 Owner May Stop Work ……
13.06 Correction or Removal of Defective Work ……
13.07 Correction Period ……..
13.08 Acceptance of Defective Work ……
13.09 Owner May Correct Defective or Non-Conforming Work ……..

Article 14 – Payments to Contractor and Completion

14.01 Schedule of Values ……
14.02 Progress Payments ……
14.03 Contractor's Warranty of Title ……..
14.04 Substantial Completion ……
14.05 Partial Utilization ……..
14.06 Final Inspection ……
14.07 Final Payment ……
14.08 Final Completion Delayed ……....
14.09 Waiver of Claims ……..

Article 15 – Suspension of Work and Termination

15.01 Owner May Suspend Work ……
15.02 Owner May Terminate For Cause ……
15.03 Owner May Terminate For Convenience ……..
15.04 Contractor May Stop Work or Terminate ……..

Article 16 – Intentionally Deleted

Article 17 - Miscellaneous
\

17.01 Giving Notice ……
17.02 Computation of Times ……
17.03 Cumulative Remedies ……
17.04 Survival of Obligations ……..
17.05 Controlling Law ……
17.06 Headings ……

# ARTICLE 1 – DEFINITIONS AND TERMINOLOGY

## 1.01 Defined Terms

Wherever used in the Contract Documents and printed with initial capital letters, the terms listed below will have the meanings indicated which are applicable to both the singular and plural thereof. In addition to terms specifically defined, terms with initial capital letters in the Contract Documents include references to identified articles and paragraphs, and the titles of other documents or forms.

1. *Addenda*—Written or graphic instruments issued prior to the opening of Bids which clarify, correct, or change the Bidding Requirements or the proposed Contract Documents.

2. *Agreement*—The written instrument which is evidence of the agreement between Owner and Contractor covering the Work.

3. *Application for Payment*—The form acceptable to Engineer which is to be used by Contractor during the course of the Work in requesting progress or final payments and which is to be accompanied by such supporting documentation as is required by the Contract Documents.

4. *Change Order*—A document possibly prepared by Engineer which is signed by Contractor and Owner and authorizes an addition, deletion, or revision in the Work or an adjustment in the Contract Price or the Contract Times, issued on or after the Effective Date of the Agreement.

5. *Claim*—A demand or assertion by Owner or Contractor seeking an adjustment of Contract Price or Contract Times, or both, or other relief with respect to the terms of the Contract. A demand for money or services by a third party is not a Claim.

6. *Contract*—The entire and integrated written agreement between the Owner and Contractor concerning the Work. The Contract supersedes prior negotiations, representations, or agreements, whether written or oral.

7. *Contract Documents*—Those items so designated in the Agreement. Approved Shop Drawings and other Contractor submittals are not Contract Documents.

8. *Contract Price*—The moneys payable by Owner to Contractor for completion of the Work in accordance with the Contract Documents as stated in the Agreement.

9. *Contract Time(s)*—The number of day(s) or the date(s) stated in the Agreement to: (i) achieve Milestones, if any; (ii) achieve Substantial Completion; and (iii) complete the Work so that it is ready for final payment as evidenced by Engineer's written recommendation of final payment.

10. *Drawings*—The Drawings are listed in Exhibit C to the Agreement. Shop Drawings and other Contractor submittals are not Drawings as so defined.

11. *Effective Date of the Agreement*—The date indicated in the Agreement on which it becomes effective, but if no such date is indicated, it means the date on which the Agreement is signed and delivered by the last of the two parties to sign and deliver.

12. *Engineer*—Design professional

13. *Field Order*—A written order issued by Engineer which requires minor changes in the Work but which does not involve a change in the Contract Price or the Contract Times.

14. *Hazardous Environmental Condition*—The presence at the Site of Asbestos, PCBs, Petroleum, Hazardous Waste, or Radioactive Material in such quantities or circumstances that may present a substantial danger to persons or property exposed thereto.

15. *Hazardous Waste*—The term Hazardous Waste shall have the meaning provided in Section 1004 of the Solid Waste Disposal Act (42 USC Section 6903) as amended from time to time.

16. *Laws and Regulations; Laws or Regulations*—Any and all applicable laws, rules, regulations, ordinances, codes, and orders of any and all governmental bodies, agencies, authorities, and courts having jurisdiction.

17. *Liens*—Charges, security interests, or encumbrances upon Project funds, real property, or personal property.

18. *Milestone*—A principal event specified in the Contract Documents relating to an intermediate completion date or time prior to Substantial Completion of all the Work.

19. *Notice of Award*—The written notice by Owner to the Successful Bidder stating that upon timely compliance by the Successful Bidder with the conditions precedent listed therein, Owner will sign and deliver the Agreement.

20. *Notice to Proceed*—A written notice given by Owner to Contractor fixing the date on which the Contract Times will commence to run and on which Contractor shall start to perform the Work under the Contract Documents.

21. *PCBs*—Polychlorinated biphenyls.

22. *Petroleum*—Petroleum, including crude oil or any fraction thereof which is liquid at standard conditions of temperature and pressure (60 degrees Fahrenheit and 14.7 pounds per square inch absolute), such as oil, petroleum, fuel oil, oil sludge, oil refuse, gasoline, kerosene, and oil mixed with other non-Hazardous Waste and crude oils.

23. *Progress Schedule*—A schedule, prepared and maintained by Contractor, describing the sequence and duration of the activities comprising the Contractor's plan to accomplish the Work within the Contract Times.

24. *Project*—The total construction of which the Work to be performed under the Contract Documents may be the whole, or a part.

25. *Project Manual*—The bound documentary information prepared for bidding and constructing the Work. A listing of the contents of the Project Manual, which may be bound in one or more volumes, is contained in the table(s) of contents. In no event shall the Project Manual be deemed part of the Contract Documents.

26. *Owner*— Village of Wellington, a Florida municipal corporation, through its Village Council

27. *Owner's Representative*—Employee of the Village of Wellington who has been authorized to make Project decisions on the Owner's behalf.

28. *Radioactive Material*—Source, special nuclear, or byproduct material as defined by the Atomic Energy Act of 1954 (42 USC Section 2011 et seq.) as amended from time to time.

29. *Resident Project Representative*—The authorized representative of Engineer who may be assigned to the Site or any part thereof.

30. *Samples*—Physical examples of materials, equipment, or workmanship that are representative of some portion of the Work and which establish the standards by which such portion of the Work will be judged.

31. *Schedule of Submittals or Submittal Schedule*—A schedule, prepared and maintained by Contractor, of required submittals and the time requirements to support scheduled performance of related construction activities.

32. *Schedule of Values*—A schedule, prepared and maintained by Contractor, allocating portions of the Contract Price to various portions of the Work and used as the basis for reviewing Contractor's Applications for Payment.

33. *Shop Drawings*—All drawings, diagrams, illustrations, schedules, and other data or information which are specifically prepared or assembled by or for Contractor and submitted by Contractor to illustrate some portion of the Work.

34. *Site*—Lands or areas indicated in the Contract Documents as being furnished by Owner upon which the Work is to be performed, including rights-of-way and easements for access thereto, and such other lands furnished by Owner which are designated for the use of Contractor.

35. *Specifications*—That part of the Contract Documents consisting of written requirements for materials, equipment, systems, standards and workmanship as applied to the Work, and certain administrative requirements and procedural matters applicable thereto.

36. *Subcontractor*—An individual or entity having a direct contract with Contractor or with any other Subcontractor for the performance of a part of the Work at the Site.

37. *Substantial Completion*— Substantial Completion is defined as the time at which the Work (or a specified part thereof) has progressed to the point where, in the opinion of Engineer, the Work (or a specified part thereof) is sufficiently complete, in accordance with the Contract Documents, so that the Work (or a specified part thereof) can be utilized for the purposes for which it is intended and all necessary governmental approvals required for the Owner to utilize the Project for the purposes intended have been obtained. The terms "substantially complete" and "substantially completed" as applied to all or part of the Work refer to Substantial Completion thereof. The date is defined in the Contract Documents.

38. *Underground Facilities*—All underground pipelines, conduits, ducts, cables, wires, manholes, vaults, tanks, tunnels, or other such facilities or attachments, and any encasements containing such facilities, including those that convey electricity, gases, steam, liquid petroleum products, telephone or other communications, cable television, water, wastewater, storm water, other liquids or chemicals, or traffic or other control systems.

39. *Unit Price Work*—Work to be paid for on the basis of unit prices.

40. *Construction Change Directive*—A written statement to Contractor issued on or after the Effective Date of the Agreement and signed by Owner and recommended by Engineer ordering an addition, deletion, or revision in the Work, or responding to differing or unforeseen subsurface or physical conditions under which the Work is to be performed or to emergencies or may be utilized in the absence of complete agreement on the terms of a Change Order. A Construction Change Directive will not change the Contract Price or the Contract Times but is evidence that the parties expect that the change ordered or documented by a Construction Change Directive will be incorporated in a subsequently issued Change Order following negotiations by the parties as to its effect, if any, on the Contract Price or Contract Times. Contractor shall be obligated to proceed with all Construction Change Directives pending resolution of a Change Order, if applicable.

1.02 Terminology

A. *Intent of Certain Terms or Adjectives:*

1. The Contract Documents include the terms "as allowed," "as approved," "as ordered," "as directed" or terms of like effect or import to authorize an exercise of professional judgment by Engineer. In addition, the adjectives "reasonable," "suitable," "acceptable," "proper," "satisfactory," or adjectives of like effect or import are used to describe an action or determination of Engineer as to the Work. It is intended that such exercise of professional judgment, action, or determination will be solely to evaluate, in general, the Work for compliance with the information in the Contract Documents and with the design concept of the Project as a functioning whole as shown or indicated in the Contract Documents (unless there is a specific statement indicating

otherwise). The use of any such term or adjective is not intended to and shall not be effective to assign to Engineer any duty or authority to supervise or direct the performance of the Work, or any duty or authority to undertake responsibility contrary to the provisions of Paragraph 9.09 of the General Conditions or any other provision of the Contract Documents.

B. *Day:*

1. The word "day" means a calendar day..

C. *Furnish, Install, Perform, Provide:*

1. The word "furnish," when used in connection with services, materials, or equipment, shall mean to supply and deliver said services, materials, or equipment to the Site (or some other specified location) ready for use or installation and in usable or operable condition.

2. The word "install," when used in connection with services, materials, or equipment, shall mean to put into use or place in final position said services, materials, or equipment complete and ready for intended use.

3. The words "perform" or "provide," when used in connection with services, materials, or equipment, shall mean to furnish and install said services, materials, or equipment complete and ready for intended use.

4. When "furnish," "install," "perform," or "provide" is not used in connection with services, materials, or equipment in a context clearly requiring an obligation of Contractor, "provide" is implied.

D. Unless stated otherwise in the Contract Documents, words or phrases that have a well-known technical or construction industry or trade meaning are used in the Contract Documents in accordance with such recognized meaning.

## ARTICLE 2 – PRELIMINARY MATTERS

2.01 Delivery of Bonds and Evidence of Insurance

A. When Contractor delivers the executed counterparts of the Agreement to Owner, Contractor shall also deliver to Owner the required payment and performance bonds in the form attached as **Exhibit "D"** to the Agreement.

B. *Evidence of Insurance:* Before any Work at the Site is started, Contractor shall deliver to the Owner, with copies to each additional insured, certificates of insurance (and other evidence of insurance which the Owner or any additional insured may reasonably request) which Contractor is required to purchase and maintain in accordance with the Contract Documents.

2.02 Copies of Documents

A. Upon written request, Owner shall furnish to Contractor up to two printed hard copies of the Contract Documents. Additional copies of the Contract Documents will be furnished upon request at the cost of reproduction.

2.03 Starting the Work

A. Contractor shall start to perform the Work on the Date of Commencement. No Work shall be done at the Site prior to the Date of Commencement, unless expressly authorized by Owner in writing.

2.04. Intentionally Deleted.

2.05 Before Starting Construction

A. *Construction Schedules:* Within 30 days after the Effective Date of the Agreement (unless otherwise specified in the General Requirements), Contractor shall submit to Owner for timely review:

1. a construction schedule, otherwise referred to herein as a Progress Schedule, indicating the times (numbers of days or dates) for starting and completing the various stages of the Work, including any Milestones specified in the Contract Documents; and

2. a Schedule of Submittals; and

3. a Schedule of Values for all of the Work which includes quantities and prices of items which when added together equal the Contract Price and subdivides the Work into component parts in sufficient detail to serve as the basis for progress payments during performance of the Work. Such prices will include the agreed upon amount of overhead and profit applicable to each item of Work.

2.06 Preconstruction Conference; Designation of Authorized Representatives

A. Before any Work at the Site is started, a conference attended by Owner, Contractor, Engineer, and others as appropriate will be held to establish a working understanding among the parties as to the Work and to discuss the schedules referred to in Paragraph 2.05.A, procedures for handling Shop Drawings and other submittals, processing Applications for Payment, and maintaining required records.

B. If not already done so, at this conference Owner and Contractor each shall designate, in writing, a specific individual to act as its authorized representative with respect to the services and responsibilities under the Contract. Such individuals shall have the authority to transmit instructions, receive information, render decisions relative to the Contract, and otherwise act on behalf of each respective party.

2.07 Initial Acceptance of Schedules

A. At least 10 days before submission of the first Application for Payment a conference attended by Owner, Contractor, Engineer, and others as appropriate will be held to review for acceptability to Owner/Engineer as provided below the schedules submitted in accordance with Paragraph 2.05.A. Contractor shall have an additional 10 days to make corrections and adjustments and to complete and resubmit the schedules. No progress payment shall be made to Contractor until acceptable schedules are submitted to Owner/Engineer. The Progress Schedule shall be in a detailed precedence style critical path management ("CPM") format satisfactory to the Owner and Engineer that shall also: (i) provide a graphic representation of all activities and events that will occur during performance of the Work; (ii) identify each phase of construction and occupancy; and (iii) set forth dates that are critical in ensuring the timely and orderly completion of the Work in accordance with the requirements of the Contract Documents (hereinafter referred to as "Milestone Dates"). The Contractor shall monitor the progress of the Work for conformance with the requirements of the Progress Schedule and shall promptly advise the Owner of any delays or potential delays. The accepted Progress Schedule shall be updated to reflect actual conditions and as requested by the Owner. In the event any progress report indicates any delays, the Contractor shall propose an affirmative plan to correct the delay. Any overtime and/or additional labor to correct the delay shall be at the Contractor's sole expense if the delay is caused in whole or in part by the Contractor, its Subcontractors, or anyone for whom the Contractor is responsible. In no event shall any progress report constitute an adjustment in the Contract Time, Milestone Dates, or the Contract Price unless any such adjustment is agreed to by the Owner and authorized pursuant to written Change Order. Contractor shall maintain such Progress Schedule on a current basis in accordance with the provisions of this paragraph and shall keep proper records to substantiate actual activity, duration and completion dates.

B. In the event the Owner determines that the performance of the Work, as of a Milestone Date, has not progressed or reached the level of completion required by the Contract Documents or if the Owner determines that Substantial Completion may be delayed, and provided that the delay was not due to an act or omission caused solely by the Owner, the Owner shall have the right to order the Contractor to take corrective measures, at Contractor's sole cost and expense, necessary to expedite the progress of construction, including without limitation: (i) working additional shifts or overtime in conformity with schedules recognizing the requirements of the Owner; (ii) supplying, additional manpower equipment and facilities; and (iii) other similar measures (hereinafter referred to collectively as "Remedial Measures"). Such Remedial Measures shall continue until the progress of the Work complies with the stage of completion required by the Contract Documents. If Contractor fails to undertake such Remedial Measures, then after seven (7) days written notice, Owner may undertake such Remedial Measures at Contractor's expense which Owner may, at its election, subtract from amounts due Contractor.

C. At least 10 days before submission of the first Application for Payment a conference attended by Owner, Contractor, Engineer, and others as appropriate will be held to review for acceptability to Owner/Engineer as Schedule of Submittals submitted in accordance with Paragraph 2.05.A. Contractor shall have an additional 10 days to make corrections and adjustments and to complete and resubmit the Schedule of Submittals. No progress payment shall be made to Contractor until acceptable schedules are submitted to Owner/Engineer . Contractor shall maintain and update the Schedule of Submittals as needed and/or required under the Contract Documents.

D. At least 10 days before submission of the first Application for Payment a conference attended by Owner, Contractor, Engineer, and others as appropriate will be held to review for acceptability to Owner/Engineer as Schedule of Values submitted in accordance with Paragraph 2.05.A. Contractor shall have an additional 10 days to make corrections and adjustments and to complete and resubmit the Schedule of Values. No progress payment shall be made to Contractor until acceptable schedules are submitted to Owner/Engineer . Contractor shall maintain and update the Schedule of Values as needed and/or required under the Contract Documents.

## ARTICLE 3 – CONTRACT DOCUMENTS: INTENT, AMENDING, REUSE

3.01 Intent

A. The Contract Documents are complementary; what is required by one is as binding as if required by all.

B. It is the intent of the Contract Documents to describe a functionally complete project (or part thereof) to be constructed in accordance with the Contract Documents. Any labor, documentation, services, materials, or equipment that reasonably may be inferred from the Contract Documents or from prevailing custom or trade usage as being required to produce the indicated result will be provided whether or not specifically called for, at no additional cost to Owner.

C. Clarifications and interpretations of the Contract Documents shall be issued by Owner/Engineer as provided in Article 9 of the General Conditions.

3.02 Reference Standards

A. Standards, Specifications, Codes, Laws, and Regulations

1. Reference to standards, specifications, manuals, or codes of any technical society, organization, or association, or to Laws or Regulations, whether such reference be specific or by implication, shall mean the standard, specification, manual, code, or Laws or Regulations in effect as of the Effective Date of the Agreement, except as may be otherwise specifically stated in the Contract Documents.

2. No provision of any such standard, specification, manual, or code, or any instruction of a Supplier, shall release the Contractor or any of their subcontractors, consultants, agents, or employees of

their duties or responsibilities set forth in the Contract Documents. No such provision or instruction shall be effective to assign to Owner, Engineer, or any of their officers, directors, members, partners, employees, agents, consultants, or subcontractors, any duty or authority to supervise or direct the performance of the Work or any duty or authority to undertake responsibility inconsistent with the provisions of the Contract Documents.

3.03 Reporting and Resolving Discrepancies in Contract Documents

A. *Reporting Discrepancies*:

1. *Contractor's Review of Contract Documents*: Before undertaking each part of the Work, Contractor shall carefully study and compare the Contract Documents and check and verify pertinent figures therein and all applicable field measurements. Contractor shall promptly report in writing to Engineer any conflict, error, ambiguity, or discrepancy which Contractor discovers, or has actual knowledge of, and shall obtain a written interpretation or clarification from Engineer before proceeding with any Work affected thereby. Failure to report any such conflict, error, ambiguity, or discrepancy to the Engineer shall result in a waiver of all Claims related thereto.

2. *Contractor's Review of Contract Documents During Performance of Work*: If, during the performance of the Work, Contractor discovers any conflict, error, ambiguity, or discrepancy within the Contract Documents, or between the Contract Documents and (a) any applicable Law or Regulation, (b) any standard, specification, manual, or code, or (c) any instruction of any Supplier, then Contractor shall promptly report it to Engineer in writing. Contractor shall not proceed with the Work affected thereby (except in an emergency as required by Paragraph 6.16.A) until an amendment or supplement to the Contract Documents has been issued by one of the methods indicated in Paragraph 3.04.

B. *Resolving Discrepancies*:

1. The Contract Documents shall be interpreted together and in harmony with one another. In the event of a conflict between or among the Contract Documents or between or among the Contract Documents and any Laws or Regulations, whichever imposes the greater obligation on Contractor or contains the more stringent requirement on the Contractor shall control.

3.04 Amending and Supplementing Contract Documents

A. The Contract Documents may be amended to provide for additions, deletions, and revisions in the Work or to modify the terms and conditions thereof by either a Change Order or a Construction Change Directive.

B. The requirements of the Contract Documents may be supplemented, and minor variations and deviations in the Work may be authorized, so long as there is no impact to the Contract Time or Contract Price, by issuance of a Field Order.

3.05 Reuse of Documents & Electronic Data

A. Unless otherwise stated in the Contract Documents if there is a discrepancy between the electronic files of drawings and the hard copies of drawings, the hard copies govern.

B. When transferring documents in electronic media format, the transferring party makes no representations as to long term compatibility, usability, or readability of documents resulting from the use of software application packages, operating systems, or computer hardware differing from those used by the data's creator.

C. Before Owner and Contractor transmit documents or data, either personally or electronically, they shall endeavor to establish necessary safeguard protocols governing such transmissions, unless otherwise already provided in the Contract Documents.

D. Notwithstanding the foregoing, the Owner shall be deemed the author and owner of the Drawings, Specifications, documents and data, including, without limitation, design documents and data prepared on behalf of Owner and provided by Owner to Contractor whether in hard copy or electronic format. As a result, Owner will retain all common law, statutory and other reserved rights, including any and all intellectual property rights. The Contractor, Subcontractors, Sub-subcontractors, and material or equipment suppliers shall not own or claim any rights in such documents or data and may not use said documents and data on other projects or for additions to this Project outside the scope of the Work without the specific written consent of the Owner. The Contractor, Subcontractors, Sub-subcontractors and material or equipment suppliers are authorized to use and reproduce the documents and data provided to them solely and exclusively for execution of the Work. Submittal or distribution to meet official regulatory requirements or for other purposes in connection with the Project is not to be construed as publication in derogation of the Owner's reserved rights

E. The prohibitions of Paragraph 3.05 D will survive final payment, or termination of the Contract. Contractor shall indemnify and hold harmless the Owner and Engineer from any claims, liabilities and damages including but not limited to reasonable attorney's fees and costs due to any unauthorized use of Drawings, Specifications or documents by Contractor, any Subcontractor, Supplier or any person or entity for which they are responsible. Nothing herein shall preclude Contractor from retaining copies of the Contract Documents for record purposes.

## ARTICLE 4 – AVAILABILITY OF LANDS; SUBSURFACE AND PHYSICAL CONDITIONS; HAZARDOUS ENVIRONMENTAL CONDITIONS; REFERENCE POINTS

4.01 Availability of Lands

A. Owner shall furnish the Site. Owner shall notify Contractor of any encumbrances or restrictions not of general application but which specifically related to use of the Site of which the Owner is aware and with which Contractor must comply in performing the Work. Owner will obtain in a timely manner and pay for easements for permanent structures or permanent changes in existing facilities.

B. Contractor shall provide for all additional lands and access thereto that may be required for temporary construction facilities or storage of materials and equipment.

4.02 Subsurface and Physical Conditions

A. Reports and drawings were provided to Contractor as part of the Request for Proposal/Invitation to Bid and are attached as part of **Composite Exhibit "C"**.

B. *Limited Reliance by Contractor Authorized:* Contractor may not rely upon the accuracy of the reports and drawings in **Composite Exhibit "C"**. Contractor shall independently confirm that, in the Contractor's professional judgment, the information is reliable and accurate. Contractor shall have full responsibility with respect to subsurface and physical conditions at or contiguous to the Site, subject to Paragraph 4.03 below. Contractor may not rely upon or make any claim against Owner or Engineer, or any of their officers, directors, members, partners, employees, agents, consultants, or subcontractors with respect to:

1. the completeness of such reports and drawings for Contractor's purposes, including, but not limited to, any aspects of the means, methods, techniques, sequences, and procedures of construction to be employed by Contractor, and safety precautions and programs incident thereto; or

2. other data, interpretations, opinions, and information contained in such reports or shown or indicated in such drawings; or

3. any Contractor interpretation of or conclusion drawn from any data, interpretations, opinions, or information.

4.03 Differing Subsurface or Physical Conditions

A. If Contractor believes that any subsurface or physical condition that is uncovered or revealed either:

1. is of such a nature as to establish that any information on which Contractor is entitled to rely as provided in Paragraph 4.02 is materially inaccurate; or

2. differs materially from that shown or indicated in the Contract Documents; or

3. is of an unusual nature, and differs materially from conditions ordinarily encountered and generally recognized as inherent in work of the character provided for in the Contract Documents; and

4. is of such a nature as to require a change in the Contract Documents;

then Contractor shall, promptly after becoming aware thereof and before further disturbing the subsurface or physical conditions or performing any Work in connection therewith (except in an emergency as required by Paragraph 6.16.A), notify Owner and Engineer in writing about such condition.

B. *Engineer's Review:* After receipt of written notice as required by Paragraph 4.03.A, Engineer will promptly review the pertinent condition, determine the necessity of Owner's obtaining additional exploration or tests with respect thereto, and advise Owner in writing (with a copy to Contractor) of Engineer's findings and conclusions.

C. *Possible Price and Times Adjustments:*

1. Contractor may make a Claim for an equitable adjustment to the Contract Price or the Contract Times, or both, to the extent that the existence of such differing subsurface or physical condition causes an increase or decrease in Contractor's cost of, or time required for, performance of the Work; subject, however, to the following:

a. such condition must meet the requirements described in Paragraph 4.03.A;

b. a Claim is not precluded pursuant to Paragraph 4.02B;

c. the Engineer's findings and conclusions support such an adjustment to the Contract Price and/or Contract Time; and

d. with respect to Work that is paid for on a unit price basis, any adjustment in Contract Price will be subject to the provisions of Paragraphs 9.07 and 11.03.

2. Contractor shall not be entitled to any adjustment in the Contract Price or Contract Times if:

a. Contractor knew of or Contractor, as an experienced and knowledgeable contractor, should have known of the existence of such conditions at the time Contractor made a final commitment to Owner with respect to Contract Price and Contract Times by the submission of a Bid or becoming bound under this Agreement; or

b. the existence of such condition could reasonably have been discovered or revealed as a result of any examination, investigation, exploration, test, or study of the Site and contiguous areas required by the Contract Documents; or

c. Contractor failed to give the written notice as required by Paragraph 4.03.A.

3. If Owner and Contractor are unable to agree on entitlement to or on the amount or extent, if any, of any adjustment in the Contract Price or Contract Times, or both, a Claim may be made therefor as provided in Paragraph 10.05. However, neither Owner nor Engineer, or any of their officers, directors, members, partners, employees, agents, consultants, or subcontractors shall be liable to Contractor for any claims, costs, losses, or damages (including but not limited to all fees and charges of engineers, architects, attorneys, and other professionals and all court or arbitration or other dispute resolution costs) sustained by Contractor on or in connection with any other project or anticipated project or lost profits on this Project.

4.04 Underground Facilities

A. *Shown or Indicated:* The information and data shown or indicated in the Contract Documents with respect to existing Underground Facilities at or contiguous to the Site is based on information and data furnished to Owner or Engineer by the owners of such Underground Facilities, including Owner, or by others. Unless it is otherwise expressly provided in the Supplementary Conditions:

1. Owner and Engineer shall not be responsible for the accuracy or completeness of any such information or data provided by others; and

2. the cost of all of the following will be included in the Contract Price, and Contractor shall have full responsibility for:

a. reviewing and checking all such information and data;

b. locating all Underground Facilities shown or indicated in the Contract Documents;

c. coordination of the Work with the owners of such Underground Facilities, including Owner, during construction; and

d. the safety and protection of all such Underground Facilities and repairing any damage thereto resulting from the Work.

B. *Not Shown or Indicated:*

1. If an Underground Facility is uncovered or revealed at or contiguous to the Site which was not shown or indicated, or not shown or indicated with reasonable accuracy in the Contract Documents, Contractor shall, promptly after becoming aware thereof and before further disturbing conditions affected thereby or performing any Work in connection therewith (except in an emergency as required by Paragraph 6.16.A), identify the owner of such Underground Facility and give written notice to that owner and to Owner and Engineer. Engineer will promptly review the Underground Facility and determine the extent, if any, to which a change is required in the Contract Documents to reflect and document the consequences of the existence or location of the Underground Facility. During such time, Contractor shall be responsible for the safety and protection of such Underground Facility.

2. If Engineer concludes that a change in the Contract Documents is required, a Construction Change Directive or a Change Order will be issued to reflect and document such consequences. An equitable adjustment shall be made in the Contract Price or Contract Times, or both, to the extent that they are attributable to the existence or location of any Underground Facility that was not shown or indicated or not shown or indicated with reasonable accuracy in the Contract Documents and that Contractor did not know of and could not reasonably have been expected to be aware of or to have anticipated. If Owner and Contractor are unable to agree on entitlement to or on the amount or extent, if any, of any such adjustment in Contract Price or Contract Times, Owner or Contractor may make a Claim therefor as provided in Paragraph 10.05.

4.05 Reference Points

A. Owner shall provide engineering surveys to establish reference points for construction which in Engineer's judgment are necessary to enable Contractor to proceed with the Work. Contractor shall be responsible for laying out the Work, shall protect and preserve the established reference points and property monuments, and shall make no changes or relocations without the prior written approval of Owner. Contractor shall report to Engineer whenever any reference point or property monument is lost or destroyed or requires relocation because of necessary changes in grades or locations, and shall be responsible for the accurate replacement or relocation of such reference points or property monuments by professionally qualified personnel.

4.06 Hazardous Environmental Condition at Site

A. Reports and drawings of Hazardous Environmental Conditions known to the Owner that have been identified at the Site are attached as part of **Composite Exhibit "C"**.

B. *Limited Reliance by Contractor:* Contractor may not rely upon the accuracy of the reports and drawings in **Composite Exhibit "C"**. Contractor shall independently confirm that, in the Contractor's professional judgment, the information is reliable and accurate Contractor may not rely upon or make any claim against Owner or Engineer, or any of their officers, directors, members, partners, employees, agents, consultants, or subcontractors with respect to:

1. the completeness of such reports and drawings for Contractor's purposes, including, but not limited to, any aspects of the means, methods, techniques, sequences and procedures of construction to be employed by Contractor and safety precautions and programs incident thereto; or

2. other data, interpretations, opinions and information contained in such reports or shown or indicated in such drawings; or

3. any Contractor interpretation of or conclusion drawn from anydata, interpretations, opinions or information.

C. Contractor shall not be responsible for any Hazardous Environmental Condition uncovered or revealed at the Site which was not shown or indicated in Drawings or Specifications, identified in the Contract Documents to be within the scope of the Work, or which should have been reasonably known to the Contractor. Contractor shall be responsible for a Hazardous Environmental Condition created with any materials brought to the Site by Contractor, Subcontractors, Suppliers, or anyone else for whom Contractor is responsible.

D. If Contractor encounters a Hazardous Environmental Condition or if Contractor or anyone for whom Contractor is responsible creates a Hazardous Environmental Condition, Contractor shall immediately: (i) secure or otherwise isolate such condition; (ii) stop all Work in connection with such condition and in any area affected thereby (except in an emergency as required by Paragraph 6.16.A); and (iii) notify Owner and Engineer (and promptly thereafter confirm such notice in writing). Owner shall promptly consult with Engineer concerning the necessity for Owner to retain a qualified expert to evaluate such condition or take corrective action, if any.

E. Contractor shall not be required to resume Work in connection with such condition or in any affected area until after Owner has obtained any required permits related thereto and delivered written notice to Contractor: (i) specifying that such condition and any affected area is or has been rendered safe for the resumption of Work; or (ii) specifying any special conditions under which such Work may be resumed safely. If Owner and Contractor cannot agree as to entitlement to or on the amount or extent, if any, of any adjustment in Contract Price or Contract Times, or both, as a result of such Work stoppage or such special

conditions under which Work is agreed to be resumed by Contractor, either party may make a Claim therefor as provided in Paragraph 10.05.

F. If after receipt of such written notice Contractor does not agree to resume such Work based on a reasonable belief it is unsafe, or does not agree to resume such Work under such special conditions, then Owner may order the portion of the Work that is in the area affected by such condition to be deleted from the Work. If Owner and Contractor cannot agree as to entitlement to or on the amount or extent, if any, of an adjustment in Contract Price or Contract Times as a result of deleting such portion of the Work, then either party may make a Claim therefor as provided in Paragraph 10.05. Owner may have such deleted portion of the Work performed by Owner's own forces or others in accordance with Article 7 and the Contract Price shall be reduced by deductive Change Order for the costs incurred by Owner to perform the deleted portion of the Work with Owner's own forces or by others.

G. To the fullest extent permitted by Laws and Regulations, Contractor shall indemnify and hold harmless Owner and Engineer, and the officers, directors, members, partners, employees, agents, consultants, and subcontractors of each and any of them from and against all claims, costs, losses, and damages (including but not limited to all fees and charges of engineers, architects, attorneys, and other professionals and all court or arbitration or other dispute resolution costs) arising out of or relating to a Hazardous Environmental Condition created by Contractor or by anyone for whom Contractor is responsible. Nothing in this Paragraph 4.06.G shall obligate Contractor to indemnify any individual or entity from and against the consequences of that individual's or entity's own negligence.

H. The provisions of Paragraphs 4.02, 4.03, and 4.04 do not apply to a Hazardous Environmental Condition uncovered or revealed at the Site.

## ARTICLE 5 – BONDS AND INSURANCE

5.01 Performance, Payment, and Other Bonds

A. Contractor shall furnish performance and payment bonds, each in an amount at least equal to the Contract Price as security for the faithful performance and payment of all of Contractor's obligations under the Contract Documents and in the forms attached to the Agreement all in accordance with applicable Florida law. These bonds shall remain in effect until one year after the date when final payment becomes due or until completion of the correction period specified in Paragraph 13.07, whichever is later, except as provided otherwise by Laws or Regulations or by the Contract Documents. Contractor shall also furnish such other bonds as are required by the Contract Documents. Contractor's performance bond shall not contain any limitation or exclusion for Contractor's warranty obligations.

B. All bonds shall be in the form prescribed by the Contract Documents except as provided otherwise by Laws or Regulations, and shall be executed by such sureties as are named in the list of "Companies Holding Certificates of Authority as Acceptable Sureties on Federal Bonds and as Acceptable Reinsuring Companies" as published in Circular 570 (amended) by the Financial Management Service, Surety Bond Branch, U.S. Department of the Treasury. All bonds signed by an agent or attorney-in-fact must be accompanied by a certified copy of that individual's authority to bind the surety. The evidence of authority shall show that it is effective on the date the agent or attorney-in-fact signed each bond.

C. If the surety on any bond furnished by Contractor is declared bankrupt or becomes insolvent or its right to do business is terminated in any state where any part of the Project is located or it ceases to meet the requirements of Paragraph 5.01.B, Contractor shall promptly notify Owner and Engineer and shall, within 20 days after the event giving rise to such notification, provide another bond and surety, both of which shall comply with the requirements of Paragraphs 5.01.B and 5.02.

5.02 Licensed Sureties and Insurers

A. All bonds and insurance required by the Contract Documents to be purchased and maintained by Owner or Contractor shall be obtained from surety or insurance companies that are duly licensed or authorized in the jurisdiction in which the Project is located to issue bonds or insurance policies for the limits and coverages so required. Such surety and insurance companies shall also meet such additional requirements and qualifications as may be provided in the Supplementary Conditions.

5.03 Certificates of Insurance

A. The Owner and Engineer shall be named as an additional insured in all policies required to be maintained under the Contract Documents, with the exception of the Worker's Compensation insurance, unless otherwise specified herein. As a condition precedent to entitlement to any progress payment or final payment under the Agreement, Contractor must maintain the required insurance coverage under the Contract Documents at least until final payment unless otherwise specified within the Contract Documents.

Contractor shall deliver to Owner, with copies to each additional insured and loss payee identified in the Supplementary Conditions, certificates of insurance (and other evidence of insurance requested by Owner or any other additional insured) which Contractor is required to purchase and maintain.

C. Failure of Owner to demand such certificates or other evidence of Contractor's full compliance with these insurance requirements or failure of Owner to identify a deficiency in compliance from the evidence provided shall not be construed as a waiver of Contractor’s obligation to maintain such insurance.

D. The insurance and insurance limits required herein shall not be deemed as a limitation on Contractor’s liability under the indemnities granted to Owner in the Contract Documents.

5.04 Contractor’s Insurance

A. Contractor shall purchase and maintain such insurance as is appropriate for the Work being performed and as will provide protection from claims set forth below which may arise out of or result from Contractor’s performance of the Work and Contractor’s other obligations under the Contract Documents, whether it is to be performed by Contractor, any Subcontractor or Supplier, or by anyone directly or indirectly employed by any of them to perform any of the Work, or by anyone for whose acts any of them may be liable:

1. claims under workers’ compensation, disability benefits, and other similar employee benefit acts;

2. claims for damages because of bodily injury, occupational sickness or disease, or death of Contractor’s employees;

3. claims for damages because of bodily injury, sickness or disease, or death of any person other than Contractor’s employees;

4. claims for damages insured by reasonably available personal injury liability coverage which are sustained:

    a. by any person as a result of an offense directly or indirectly related to the employment of such person by Contractor, or

    b. by any other person for any other reason;

5. claims for damages, other than to the Work itself, because of injury to or destruction of tangible property wherever located, including loss of use resulting therefrom; and

6. claims for damages because of bodily injury or death of any person or property damage arising out of the ownership, maintenance or use of any motor vehicle.

B. The policies of insurance required by this Paragraph 5.04 shall:

1. with respect to insurance required by Paragraphs 5.04.A.3 through 5.04.A.6 inclusive, be written on an a Project specific occurrence basis with limits as outlined in the Supplementary Conditions or as required by Laws or Regulations, whichever is greater. Such policies shall include as additional insureds (subject to any customary exclusion regarding professional liability) Owner and Engineer, and any other individuals or entities identified in the Supplementary Conditions, all of whom shall be listed as additional insureds, and include coverage for the respective officers, directors, members, partners, employees, agents, consultants, and subcontractors of each and any of all such additional insureds, and the insurance afforded to these additional insureds shall provide primary coverage for all claims covered thereby. Contractor shall deliver endorsements showing such additional insured coverage using the ISO form CG 20 10 11 85 or its 2004 ISO equivalent (forms 20 10 07 04 and 20 37 07 04) for both ongoing and completed operations;

2. include at least the specific coverages and be written for not less than the limits of liability provided in the Supplementary Conditions or required by Laws or Regulations, whichever is greater;

3. include contractual liability insurance covering Contractor's indemnity obligations under Paragraphs 6.11 and 6.20;

4. contain a provision or endorsement that the coverage afforded will not be canceled, materially changed or renewal refused until at least 10 days prior written notice has been given to Owner and Contractor and to each other additional insured identified in the Supplementary Conditions to whom a certificate of insurance has been issued (and the certificates of insurance furnished by the Contractor pursuant to Paragraph 5.03 will so provide);

5. remain in effect at least until final payment and at all times thereafter when Contractor may be correcting, removing, or replacing defective Work in accordance with Paragraph 13.07; and

6. include completed operations coverage with respect to insurance required by Paragraphs 5.04.A.3 through 5.04.A.6 inclusive:

   a. Such insurance shall remain in effect for one year after final payment.

   b. Contractor shall furnish Owner and each other additional insured identified in the Supplementary Conditions, to whom a certificate of insurance has been issued, evidence satisfactory to Owner and any such additional insured of continuation of such insurance at final payment and each year thereafter.

7. For Worker's Compensation insurance to apply for all employees in compliance with the "Workers' Compensation Law" of the State of Florida and all applicable federal laws. In addition, the policy(ies) must include Employer's Liability with limits as provided in the Supplementary Conditions.

8. Business Automobile Liability coverage, required by 5.04A.6, must be afforded on a form no more restrictive than the latest edition of the Business Automobile Liability Policy, without restrictive endorsements, as filed by the Insurance Services Office and must include:

   Owned vehicles.
   Non-owned and hired vehicles.

9. The policies of Contractor shall contain an endorsement whereby the insurance carriers agree that its insurance is primary and not contributory with or in excess of any coverage which the Owner has purchased. The Contractor shall be responsible for all deductibles under the insurance policies. The Contractor shall be responsible for all loss or damage to the Work, including the Contractor's materials delivered to Site for incorporation therein and all property issued to the Contractor by the Owner for use or incorporation in the Work, except for Owner Direct Purchase which shall be governed by **Exhibit "F"**. The Contractor shall waive all rights against the Owner for recovery of damages to the extent that these damages are covered by insurance maintained pursuant to the above requirements, and the Contractor shall provide all waivers of subrogation in the endorsements and forms required by the Owner.

C. Intentionally Deleted.

D. Notwithstanding the availability of any insurance, the Contractor shall bear the risk of loss for its acts, errors or omissions pursuant to this Agreement. The Contractor bears all liability and risk of loss, for losses and damages arising from any acts, errors, omissions, or negligence on the part of the Contractor and its Subcontractors, including without limitation damages for defective and nonconforming work, and the Contractor and all applicable Subcontractors shall bear the risk and pay for such losses regardless of whether the Contractor should be covered for such losses by any insurance required by this Article, except for Owner Direct Purchases governed by **Exhibit "F"** .

5.05 Limits of Liability Insurance. The limits of liability for the insurance required by paragraph 5.04 of the General Conditions shall provide coverage for not less than the following amounts or greater where required by Laws and Regulations:

Worker's Compensation, etc., under paragraphs 5.04.A.1 and A.2 of the General Conditions:

| | | |
|---|---|---|
| (1) | State: | Statutory |
| (2) | Applicable Federal (e.g. Longshoreman's and Harbour Workers' Compensation, Maritime, Jones Act, etc.): | Statutory |
| (3) | Employer's Liability: | $1,000,000 |

The coverage and the limits of liability for employer's liability are modified to read as follows:

$1,000,000 each accident
$1,000,000 disease policy limit
$1,000,000 disease each employee

Also, the following wording is added governing employer's liability for contractors that are not incorporated or lease employees: If the Contractor is not an incorporated entity (i.e. sole proprietor/partnership), or Leases Employees (under the alternate employer laws of the State of Florida), the Owner shall require a minimum premium policy meeting the aforementioned requirements even though not required by the Worker's Compensation Laws of the State of Florida. Unless and until Contractor provides the Owner with proof of exemption and such forms and proof that the Owner deems appropriate.

Comprehensive General Liability (under paragraphs 5.04.A.3 through A.6 of the General Conditions):

(1) Including coverage for Premises/Operations Liability on an occurrence basis, Contractual Liability, Independent Contractors, Products/Completed Operations Liability on an occurrence basis, and Personal Injury Coverage with the employee exclusion deleted. The Owner will not accept exclusion for explosion, collapse, or underground in the policy.

Acceptable minimum per project limits are: $2,000,000 general aggregate

$1,000,000 products and completed operations aggregate
$1,000,000 personal injury and advertising injury

$1,000,000 each occurrence

(2) Comprehensive Automobile Liability shall include coverage for owned vehicles, non-owned vehicles, and hired vehicles. Acceptable minimum limits are $1,000,000 combined single limit for bodily injury and property damage.

(3) Follow form umbrella liability naming Owner and Engineer as an additional insured, may be purchased and maintained, if necessary, to meet Owners minimum insurance requirements.

5.06 Subcontractor Insurance. All Subcontractors and suppliers shall be obligated to carry insurance commensurate with that required to be carried by Contractor.

Subcontractors and suppliers shall name the Owner and Engineer as an additional insured on all policies including completed operations coverage using the ISO form CG 20 10 11 85 or its 2004 ISO equivalent (forms 20 10 07 04 and 20 37 07 04); which shall also be maintained for a period of one (1) years from completion of the Project.

5.07 Acceptance of Bonds and Insurance; Option to Replace

A. Owner shall review the coverage afforded by or other provisions of the insurance required to be purchased or maintained by Contractor after delivery of insurance certificates to Owner in accordance with Paragraph 2.01B of the General Conditions. Contractor shall furnish to the Owner such additional information in respect to insurance provided by Contractor as the Owner may reasonably request. Review of Insurance Policies or Insurance Certificates by the Owner shall not relieve or decrease the liability of the Contractor hereunder. In case of a breach by Contractor of any insurance provision stated in the Contract Documents, the Owner at its option may take out and maintain, at the expense of the Contractor, such insurance as the Owner may deem proper and Owner may deduct the cost of such insurance from any monies which may be due or become due the Contractor under this Contract. All the policies of insurance (or the certificates or other evidence thereof) required to be purchased and maintained by Contractor shall contain the name of the Project.

5.08 Partial Utilization, Acknowledgment of Property Insurer

A. If Owner finds it necessary to occupy or use a portion or portions of the Work prior to Substantial Completion of all the Work as provided in Paragraph 14.05, no such use or occupancy shall commence before the insurers providing the property insurance pursuant to Paragraph 5.04 have acknowledged notice thereof and in writing effected any changes in coverage necessitated thereby. The insurers providing the property insurance shall consent by endorsement on the policy or policies, but the property insurance shall not be canceled or permitted to lapse on account of any such partial use or occupancy.

## ARTICLE 6 – CONTRACTOR'S RESPONSIBILITIES

6.01 Supervision

A. Contractor shall supervise, inspect, and direct the Work competently and efficiently, devoting such attention thereto and applying such skills and expertise as may be necessary to perform the Work in accordance with the Contract Documents. Contractor shall be solely responsible for the means, methods, techniques, sequences, and procedures of construction.. If the Contract Documents give specific instructions concerning construction means, methods, techniques, sequences or procedures, the Contractor shall evaluate the jobsite safety thereof and, except as stated below, shall be fully and solely responsible for the jobsite safety of such means, methods, techniques, sequences or procedures. If the Contractor determines that such means, methods, techniques, sequences or procedures may not be safe, the Contractor shall give timely written notice to the Owner and Engineer and shall not proceed with that portion of the

Work without further written instructions from the Engineer. If the Contractor is then instructed in writing by the Owner and Engineer to proceed with the required means, methods, techniques, sequences or procedures without acceptance of changes proposed by the Contractor, the Owner shall be solely responsible for any loss or damage arising solely from those Owner-required means, methods, techniques, sequences or procedures.

B. Contractor shall be responsible to see that the completed Work complies accurately with the Contract Documents.

C. At all times during the progress of the Work, Contractor shall assign a competent resident superintendent who shall not be replaced without written notice to Owner and Engineer except under extraordinary circumstances. The superintendent will be Contractor's representative at the Site and shall have the authority to act on behalf of the Contractor. All communications given to or received from the superintendent shall be binding on Contractor.

6.02 Labor; Working Hours

A. Contractor shall provide competent, suitably qualified personnel to survey and lay out the Work and perform construction as required by the Contract Documents. Contractor shall at all times maintain good discipline and order at the Site.

B. Except as otherwise required for the safety or protection of persons or the Work or property at the Site or adjacent thereto, and except as otherwise stated in the Contract Documents, all Work at the Site shall be performed Monday through Friday, 7:00 a.m. till 5:00 p.m., excluding holidays, and shall comply with the Village of Wellington's Noise Ordinance. Contractor will not permit overtime work or the performance of Work on a Sunday without Owner's written consent (which will not be unreasonably withheld) given after prior written notice to Engineer.

6.03 Services, Materials, and Equipment

A. Unless otherwise specified in the Contract Documents, Contractor shall provide and assume full responsibility for all services, materials, equipment, labor, transportation, construction equipment and machinery, tools, appliances, fuel, power, light, heat, telephone, water, sanitary facilities, temporary facilities, and all other facilities and incidentals necessary for the performance, testing, start-up, and completion of the Work.

B. All materials and equipment incorporated into the Work shall be as specified or, if not specified, shall be of good quality and new, except as otherwise provided in the Contract Documents. All special warranties and guarantees required by the Specifications shall expressly run to the benefit of Owner. If required by Engineer, Contractor shall furnish satisfactory evidence (including reports of required tests) as to the source, kind, and quality of materials and equipment.

C. All materials and equipment shall be stored, applied, installed, connected, erected, protected, used, cleaned, and conditioned in accordance with instructions and warranties of the applicable Supplier, except as otherwise may be provided in the Contract Documents.

6.04 Progress Schedule

A. Contractor shall adhere to the Schedule established in accordance with Paragraphs 2.05 and 2.07 as it may be adjusted from time to time as provided below.

1. Contractor shall submit to Owner/Engineer for acceptance (to the extent indicated in Paragraph 2.07) proposed adjustments in the Progress Schedule that will not result in changing the Contract Times. Such adjustments will comply generally to the Progress Schedule then in effect and additionally will comply with any provisions of the General Requirements applicable thereto;

2. Proposed adjustments in the Progress Schedule that will change the Contract Times shall be submitted in accordance with the requirements of Article 12. Adjustments in Contract Times may only be made by a Change Order.

6.05 Substitutes and "Or-Equals"

A. Whenever an item of material or equipment is specified or described in the Contract Documents by using the name of a proprietary item or the name of a particular Supplier, the specification or description is intended to establish the type, function, appearance, and quality required. Unless the specification or description contains or is followed by words reading that no like, equivalent, or "or-equal" item or no substitution is permitted, other items of material or equipment or material or equipment of other Suppliers may be submitted to Engineer for review under the circumstances described below.

1. *"Or-Equal" Items:* If in Engineer's sole discretion an item of material or equipment proposed by Contractor is functionally equal to that named and sufficiently similar so that no change in related Work will be required, it may be considered by Engineer as an "or-equal" item if:

a. in the exercise of reasonable judgment Engineer determines that:

1) it is at least equal in materials of construction, quality, durability, appearance, strength, and design characteristics;

2) it will reliably perform at least equally well the function and achieve the results imposed by the design concept of the completed Project as a functioning whole; and

3) it has a proven record of performance and availability of responsive service.

b. Contractor certifies that, if approved and incorporated into the Work:

1) there will be no increase in cost to the Owner or increase in Contract Times; and

2) it will conform substantially to the detailed requirements of the item named in the Contract Documents.

2. *Substitute Items:*

a. If in Engineer's sole discretion an item of material or equipment proposed by Contractor does not qualify as an "or-equal" item under Paragraph 6.05.A.1, it will be considered a proposed substitute item.

b. Contractor shall submit sufficient information as provided below to allow Engineer to determine if the item of material or equipment proposed is essentially equivalent to that named and an acceptable substitute therefor. Requests for review of proposed substitute items of material or equipment will not be accepted by Engineer from anyone other than Contractor.

c. The requirements for review by Engineer will be as set forth in Paragraph 6.05.A.2.d, as supplemented by the General Requirements, and as Engineer may decide is appropriate under the circumstances.

d. Contractor shall make written application to Engineer for review of a proposed substitute item of material or equipment that Contractor seeks to furnish or use. The application:

1) shall certify that the proposed substitute item will:

a) perform adequately the functions and achieve the results called for by the general design,

b) be similar in substance to that specified, and

c) be suited to the same use as that specified;

2) will state:

a) the extent, if any, to which the use of the proposed substitute item will prejudice Contractor's achievement of Substantial Completion on time,

b) whether use of the proposed substitute item in the Work will require a change in any of the Contract Documents (or in the provisions of any other direct contract with Owner for other work on the Project) to adapt the design to the proposed substitute item, and

c) whether incorporation or use of the proposed substitute item in connection with the Work is subject to payment of any license fee or royalty;

3) will identify:

a) all variations of the proposed substitute item from that specified, and

b) available engineering, sales, maintenance, repair, and replacement services; and

4) shall contain an itemized estimate of all costs or credits that will result directly or indirectly from use of such substitute item, including costs of redesign and claims of other contractors affected by any resulting change.

B. *Substitute Construction Methods or Procedures:* If a specific means, method, technique, sequence, or procedure of construction is expressly required by the Contract Documents, Contractor may furnish or utilize a substitute means, method, technique, sequence, or procedure of construction approved in writing by Engineer. Contractor shall submit sufficient information to allow Engineer, in Engineer's sole discretion, to determine that the substitute proposed is equivalent to that expressly called for by the Contract Documents. The requirements for review by Engineer will be similar to those provided in Paragraph 6.05.A.2.

C. *Engineer's Evaluation:* Engineer will be allowed a reasonable time within which to evaluate each proposal or submittal made pursuant to Paragraphs 6.05.A and 6.05.B. Engineer may require Contractor to furnish additional data about the proposed substitute item. Engineer will be the sole judge of acceptability. No "or equal" or substitute will be ordered, installed or utilized until Engineer's review is complete, which will be evidenced by a Change Order. Engineer will advise Contractor in writing of any negative determination.

D. *Special Guarantee:* Owner may require Contractor to furnish at Contractor's expense a special performance guarantee or other surety with respect to any substitute.

E. *Engineer's Cost Reimbursement:* Engineer will record Engineer's costs in evaluating a substitute proposed or submitted by Contractor pursuant to Paragraphs 6.05.A.2 and 6.05.B. Whether or not Engineer approves a substitute so proposed or submitted by Contractor, Contractor shall reimburse Owner for the reasonable charges of Engineer for evaluating each such proposed substitute. Contractor shall also reimburse Owner for the reasonable charges of Engineer for making changes in the Contract Documents (or in the provisions of any other direct contract with Owner) resulting from the acceptance of each proposed substitute.

F. *Contractor's Expense:* Contractor shall provide all data in support of any proposed substitute or "or-equal" at Contractor's expense.

6.06 Concerning Subcontractors, Suppliers, and Others

A. Contractor shall not employ any Subcontractor, Supplier, or other individual or entity (including those acceptable to Owner as indicated in Paragraph 6.06.B), whether initially or as a replacement, against whom Owner may have reasonable objection. Contractor shall not be required to employ any Subcontractor, Supplier, or other individual or entity to furnish or perform any of the Work against whom Contractor has reasonable objection.

B. If the Supplementary Conditions require the identity of certain Subcontractors, Suppliers, or other individuals or entities to be submitted to Owner in advance for acceptance by Owner by a specified date prior to the Effective Date of the Agreement, and if Contractor has submitted a list thereof in accordance with the Supplementary Conditions, Owner's acceptance (either in writing or by failing to make written objection thereto by the date indicated for acceptance or objection in the Bidding Documents or the Contract Documents) of any such Subcontractor, Supplier, or other individual or entity so identified may be revoked on the basis of reasonable objection after due investigation. Contractor shall submit an acceptable replacement for the rejected Subcontractor, Supplier, or other individual or entity, and the Contract Price will be adjusted by the difference in the cost occasioned by such replacement, and an appropriate Change Order will be issued. No acceptance by Owner of any such Subcontractor, Supplier, or other individual or entity, whether initially or as a replacement, shall constitute a waiver of any right of Owner or Engineer to reject defective Work.

C. Contractor shall be fully responsible to Owner and Engineer for all acts and omissions of the Subcontractors, Suppliers, and other individuals or entities performing or furnishing any of the Work just as Contractor is responsible for Contractor's own acts and omissions. Nothing in the Contract Documents:

1. shall create for the benefit of any such Subcontractor, Supplier, or other individual or entity any contractual relationship between Owner or Engineer and any such Subcontractor, Supplier or other individual or entity; nor

2. shall create any obligation on the part of Owner or Engineer to pay or to see to the payment of any moneys due any such Subcontractor, Supplier, or other individual or entity except as may otherwise be required by Laws and Regulations.

D. Owner or Engineer may furnish to any such Subcontractor, Supplier, or other individual or entity, to the extent practicable, evidence of amounts paid to Contractor in accordance with Contractor's Application for Payment.

E. Contractor shall be solely responsible for scheduling and coordinating the Work of Subcontractors, Suppliers, and other individuals or entities performing or furnishing any of the Work under a direct or indirect contract with Contractor.

F. Contractor shall require all Subcontractors, Suppliers, and such other individuals or entities performing or furnishing any of the Work to communicate with Engineer through Contractor.

G. The divisions and sections of the Specifications and the identifications of any Drawings shall not control Contractor in dividing the Work among Subcontractors or Suppliers or delineating the work to be performed by any specific trade.

H. All Work performed for Contractor by a Subcontractor or Supplier will be pursuant to an appropriate agreement between Contractor and the Subcontractor or Supplier which specifically binds the Subcontractor or Supplier to the applicable terms and conditions of the Contract Documents for the benefit of Owner and Engineer. The agreement(s) between the Contractor and the Subcontractor or Supplier will contain provisions whereby the Subcontractor or Supplier waives all rights against Owner, Contractor,

Engineer, and all other individuals or entities identified in the Supplementary Conditions to be listed as insureds or loss payees (and the officers, directors, members, partners, employees, agents, consultants, and subcontractors of each and any of them) for all losses and damages caused by, arising out of, relating to, or resulting from any of the perils or causes of loss covered by such policies and any other property insurance applicable to the Work. If the insurers on any such policies require separate waiver forms to be signed by any Subcontractor or Supplier, Contractor will obtain the same. It is further agreed that all subcontracts and material and equipment purchase contracts entered into by Contractor or its subcontractors or material suppliers, shall contain a provision stating that the Owner may bring Claim(s) directly against any subcontractor of Contractor for breach of Contract, warranty rights, quality of workmanship, and create third party beneficiary rights of Owner in said agreements. Additionally, nothing contained in this Contract shall constitute an assignment of Contractor's rights against the Owner or create any third party beneficiary rights in any subcontractors or material and equipment suppliers of Contractor. The purpose of this provision is to allow the Village, in addition to Contractor, to make claim for damage or indemnification directly against any subcontractors or material and equipment suppliers that may be ultimately responsible for defects or deficiencies in the Work or materials and equipment. Further, to the extent requested by Owner, Contractor shall deliver copies of all Subcontract and Supplier agreements, purchase orders and invoices to Owner.

6.07 Patent Fees and Royalties

A. Contractor shall pay all license fees and royalties and assume all costs incident to the use in the performance of the Work or the incorporation in the Work of any invention, design, process, product, or device which is the subject of patent rights or copyrights held by others. If a particular invention, design, process, product, or device is specified in the Contract Documents for use in the performance of the Work and if, to the actual knowledge of Owner or Engineer, its use is subject to patent rights or copyrights calling for the payment of any license fee or royalty to others, the existence of such rights shall be disclosed by Owner in the Contract Documents.

B. [Paragraph intentionally left blank.]

C. To the fullest extent permitted by Laws and Regulations, Contractor shall indemnify and hold harmless Owner and Engineer, and the officers, directors, members, partners, employees, agents, consultants and subcontractors of each and any of them from and against all claims, costs, losses, and damages (including but not limited to all fees and charges of engineers, architects, attorneys, and other professionals and all court or arbitration or other dispute resolution costs) arising out of or relating to any infringement of patent rights or copyrights incident to the use in the performance of the Work or resulting from the incorporation in the Work of any invention, design, process, product, or device not specified in the Contract Documents. Nothing herein shall be construed or interpreted as consent by the Owner to be sued, nor as a waiver of sovereign immunity beyond the waiver and limits provided in §768.28, Florida Statutes.

6.08

A. Intentionally Deleted.

6.09 Laws and Regulations

A. Contractor shall give all notices required by and shall comply with all Laws and Regulations applicable to the performance of the Work. Except where otherwise expressly required by applicable Laws and Regulations, neither Owner nor Engineer shall be responsible for monitoring Contractor's compliance with any Laws or Regulations.

B. If Contractor performs any Work knowing or having reason to know that it is contrary to Laws or Regulations, Contractor shall bear all claims, costs, losses, and damages (including but not limited to all fees and charges of engineers, architects, attorneys, and other professionals and all court or arbitration or other dispute resolution costs) arising out of or relating to such Work. However, it shall not be Contractor's

primary responsibility to make certain that the Specifications and Drawings are in accordance with Laws and Regulations, but this shall not relieve Contractor of Contractor's obligations under Paragraph 3.03.

C. Changes in Laws or Regulations not known as of the Effective Date of the Agreement having an effect on the cost or time of performance of the Work may be the subject of an adjustment in Contract Price or Contract Times. If Owner and Contractor are unable to agree on entitlement to or on the amount or extent, if any, of any such adjustment, a Claim may be made therefor as provided in Paragraph 10.05.

6.10 Taxes

A. Contractor shall pay all sales, consumer, use, and other similar taxes required to be paid by Contractor in accordance with the Laws and Regulations of the place of the Project which are applicable during the performance of the Work. Sales Tax shall be paid in accordance with the Sales Tax Recovery Program Special Conditions when applicable, as determined by the Owner and/or Engineer.

6.11 Use of Site and Other Areas

A. *Limitation on Use of Site and Other Areas:*

1. Contractor shall confine construction equipment, the storage of materials and equipment, and the operations of workers to the Site and other areas permitted by Laws and Regulations, and shall not unreasonably encumber the Site and other areas with construction equipment or other materials or equipment. Contractor shall assume full responsibility for any damage to any such land or area, or to the owner or occupant thereof, or of any adjacent land or areas resulting from the performance of the Work.

2. Should any claim be made by any such owner or occupant because of the performance of the Work, Contractor shall promptly settle with such other party by negotiation or otherwise resolve the claim by arbitration or other dispute resolution proceeding or at law.

3. To the fullest extent permitted by Laws and Regulations, Contractor shall indemnify and hold harmless Owner and Engineer, and the officers, directors, members, partners, employees, agents, consultants and subcontractors of each and any of them from and against all claims, costs, losses, and damages (including but not limited to all fees and charges of engineers, architects, attorneys, and other professionals and all court or arbitration or other dispute resolution costs) arising out of or relating to any claim or action, legal or equitable, brought by any such owner or occupant against Owner, Engineer, or any other party indemnified hereunder to the extent caused by or based upon Contractor's performance of the Work. Nothing herein shall be construed or interpreted as consent by the Owner to be sued, nor as a waiver of sovereign immunity beyond the waiver or limits provided in §768.28, Florida Statutes.

B. *Removal of Debris During Performance of the Work:* During the progress of the Work, Contractor shall keep the Site and other areas free from accumulations of waste materials, rubbish, and other debris. Removal and disposal of such waste materials, rubbish, and other debris shall conform to applicable Laws and Regulations.

C. Prior to Substantial Completion of the Work, Contractor shall clean the Site and the Work and make it ready for utilization by Owner. At the completion of the Work Contractor shall remove from the Site all tools, appliances, construction equipment and machinery, and surplus materials and shall restore to original condition all property not designated for alteration by the Contract Documents. If Contractor fails to keep the Site and other areas clean on a daily basis and/or as a condition to Substantial Completion, Owner shall have the right to deduct costs incurred by Owner to keep the Site and other areas clean and free from accumulations of waste.

D. *Loading Structures:* Contractor shall not load nor permit any part of any structure to be loaded in any manner that will endanger the structure, nor shall Contractor subject any part of the Work or adjacent

property to stresses or pressures that will endanger it.

6.12 Record Documents

A. Contractor shall maintain in a safe place at the Site one record copy of all Drawings, Specifications, Addenda, Change Orders, Construction Change Directives, Field Orders, and written interpretations and clarifications in good order and annotated to show changes made during construction. These record documents together with all approved Samples and a counterpart of all approved Shop Drawings will be available to Engineer for reference. Upon completion of the Work, these record documents, Samples, and Shop Drawings will be delivered to Engineer for Owner.

6.13 Safety and Protection

A. Contractor shall be solely responsible for initiating, maintaining and supervising all safety precautions and programs in connection with the Work. Such responsibility does not relieve Subcontractors of their responsibility for the safety of persons or property in the performance of their work, nor for compliance with applicable safety Laws and Regulations. Contractor shall take all necessary precautions for the safety of, and shall provide the necessary protection to prevent damage, injury or loss to:

1. all persons on the Site or who may be affected by the Work;

2. all the Work and materials and equipment to be incorporated therein, whether in storage on or off the Site; and

3. other property at the Site or adjacent thereto, including trees, shrubs, lawns, walks, pavements, roadways, structures, utilities, and Underground Facilities not designated for removal, relocation, or replacement in the course of construction.

B. Contractor shall comply with all applicable Laws and Regulations relating to the safety of persons or property, or to the protection of persons or property from damage, injury, or loss; and shall erect and maintain all necessary safeguards for such safety and protection. Contractor shall notify owners of adjacent property and of Underground Facilities and other utility owners when prosecution of the Work may affect them, and shall cooperate with them in the protection, removal, relocation, and replacement of their property.

C. Contractor shall comply with the applicable requirements of Owner's safety programs, if any. The Supplementary Conditions identify any Owner's safety programs that are applicable to the Work.

D. Contractor shall inform Owner and Engineer of the specific requirements of Contractor's safety program with which Owner's and Engineer's employees and representatives must comply while at the Site.

E. All damage, injury, or loss to any property including but not limited to property referred to in Paragraph 6.13.A.2 or 6.13.A.3 caused, directly or indirectly, in whole or in part, by Contractor, any Subcontractor, Supplier, or any other individual or entity directly or indirectly employed by any of them to perform any of the Work, or anyone for whose acts any of them may be liable, shall be remedied by Contractor at no additional cost to the Owner or Engineer.

F. Contractor's duties and responsibilities for safety and for protection of the Work shall continue until such time as all the Work is completed and Engineer has issued a notice to Owner and Contractor in accordance with Paragraph 14.07.B that the Work is acceptable (except as otherwise expressly provided in connection with Substantial Completion).

G. Contractor shall comply with the Trench Safety Standards provided by OSHA's Excavation Safety Standards, 29 CFR §1926.650 Subpart P and Fla. Stat. §553.60-§553.64 (1990) (inclusive).

6.14 Safety Representative

A. Contractor shall designate a qualified and experienced safety representative at the Site whose duties and responsibilities shall be the prevention of accidents and the maintaining and supervising of safety precautions and programs.

6.15 Hazard Communication Programs

A. Contractor shall be responsible for coordinating any exchange of material safety data sheets or other hazard communication information required to be made available at the Site in accordance with Laws or Regulations.

6.16 Emergencies

A. In emergencies affecting the safety or protection of persons or the Work or property at the Site or adjacent thereto, Contractor is obligated to act to prevent threatened damage, injury, or loss. Contractor shall give Engineer prompt written notice if Contractor believes that any significant changes in the Work or variations from the Contract Documents have been caused thereby or are required as a result thereof. If Engineer determines that a change in the Contract Documents is required because of the action taken by Contractor in response to such an emergency, a Construction Change Directive or Change Order will be issued.

6.17 Shop Drawings and Samples

A. Contractor shall submit Shop Drawings and Samples to Engineer for review and approval in accordance with the accepted Schedule of Submittals (as required by Paragraph 2.07). Each submittal will be identified as Engineer may require.

1. *Shop Drawings:*

    a. Submit number of copies specified in the General Requirements.

    b. Data shown on the Shop Drawings will be complete with respect to quantities, dimensions, specified performance and design criteria, materials, and similar data to show Engineer the services, materials, and equipment Contractor proposes to provide and to enable Engineer to review the information for the limited purposes required by Paragraph 6.17.D.

2. *Samples*:

    a. Submit number of Samples specified in the Specifications.

    b. Clearly identify each Sample as to material, Supplier, pertinent data such as catalog numbers, the use for which intended and other data as Engineer may require to enable Engineer to review the submittal for the limited purposes required by Paragraph 6.17.D.

B. Where a Shop Drawing or Sample is required by the Contract Documents or the Schedule of Submittals, any related Work performed prior to Engineer's review and approval of the pertinent submittal will be at the sole expense and responsibility of Contractor.

C. *Submittal Procedures:*

1. Before submitting each Shop Drawing or Sample, Contractor shall have:

    a. reviewed and coordinated each Shop Drawing or Sample with other Shop Drawings and Samples and with the requirements of the Work and the Contract Documents;

b. determined and verified all field measurements, quantities, dimensions, specified performance and design criteria, installation requirements, materials, catalog numbers, and similar information with respect thereto;

c. determined and verified the suitability of all materials offered with respect to the indicated application, fabrication, shipping, handling, storage, assembly, and installation pertaining to the performance of the Work; and

d. determined and verified all information relative to Contractor's responsibilities for means, methods, techniques, sequences, and procedures of construction, and safety precautions and programs incident thereto.

2. Each submittal shall bear a stamp or specific written certification that Contractor has satisfied Contractor's obligations under the Contract Documents with respect to Contractor's review and approval of that submittal.

3. With each submittal, Contractor shall give Engineer specific written notice of any variations that the Shop Drawing or Sample may have from the requirements of the Contract Documents. This notice shall be both a written communication separate from the Shop Drawings or Sample submittal; and, in addition, by a specific notation made on each Shop Drawing or Sample submitted to Engineer for review and approval of each such variation.

D. *Engineer's Review:*

1. Engineer will provide timely review of Shop Drawings and Samples in accordance with the Schedule of Submittals acceptable to Engineer. Engineer's review and approval will be only to determine if the items covered by the submittals will, after installation or incorporation in the Work, conform to the information given in the Contract Documents and be compatible with the design concept of the completed Project as a functioning whole as indicated by the Contract Documents.

2. Engineer's review and approval will not extend to means, methods, techniques, sequences, or procedures of construction (except where a particular means, method, technique, sequence, or procedure of construction is specifically and expressly called for by the Contract Documents) or to safety precautions or programs incident thereto. The review and approval of a separate item as such will not indicate approval of the assembly in which the item functions.

3. Engineer's review and approval shall not relieve Contractor from responsibility for any variation from the requirements of the Contract Documents unless Contractor has complied with the requirements of Paragraph 6.17.C.3 and Engineer has given written approval of each such variation by specific written notation thereof incorporated in or accompanying the Shop Drawing or Sample. Engineer's review and approval shall not relieve Contractor from responsibility for complying with the requirements of Paragraph 6.17.C.1.

E. *Resubmittal Procedures:*

1. Contractor shall make corrections required by Engineer and shall return the required number of corrected copies of Shop Drawings and submit, as required, new Samples for review and approval. Contractor shall direct specific attention in writing to revisions other than the corrections called for by Engineer on previous submittals.

6.18 Continuing the Work

A. Contractor shall carry on the Work and adhere to the Progress Schedule during all disputes or disagreements with Owner. No Work shall be delayed or postponed pending resolution of any disputes or disagreements, except as permitted by Paragraph 15.04 or as Owner and Contractor may otherwise agree in

writing.

6.19 Contractor's General Warranty and Guarantee

A. Contractor warrants and guarantees to Owner that all Work will be in accordance with the Contract Documents and will not be defective. Contractor warrants to Owner that all materials and equipment furnished for the Project will be new unless otherwise specified and that all Work for the Project, will be of first quality, free from faults and defects, fully functional, and in conformance with the Contract Documents. The Work shall be free from defects not inherent in the quality required or permitted, and that the Work will conform to the requirements of the Contract Documents. Contractor's warranty and the warranty of all Subcontractors and suppliers shall be for a period of one (1) year from final payment or longer, as may be stated in an Extended Warranties. All Work for the Project not conforming to these requirements, including substitutions not properly approved and authorized, may be considered defective. The Contractor shall, within three (3) working days of written notice from Village, correct any Work that fails to conform to the requirements of the Contract Documents and unconditionally guarantees and warrants that it shall correct at its sole cost and expense any defects due to faulty materials, equipment and/or workmanship which appear within a period of one (1) year from the date of final payment or such longer time required by the Contract Documents for particular items ( the "Extended Warranties"). The Contractor shall bear all costs of correcting such defective work. Contractor and Subcontractor warranties expressly also include all statutory warranties, all of which are specifically and expressly incorporated herein by reference. The Contractor shall also provide warranties from manufacturers for the specified items and systems within the Contract Documents and may include Extended Warranties. Notwithstanding anything set forth in the Manufacturers' Warranties to the contrary, those items specifically covered by the Manufacturers' Warranties and any disclaimers and limitations on liability shall in no way be deemed to limit Contractor's warranties and liability herein and are in addition to and not in lieu of the Contractor's warranties. These obligations shall survive termination of this Agreement. If Contractor should default in the performance of any of its warranty obligations, it shall be responsible for all damages, fees or costs incurred by the Owner in enforcing the warranty provisions of this Article, including, but not limited to, all attorney's fees, engineering and consulting fees or other expenses incurred. Without limiting the generality of the foregoing, if any warranty repairs are not performed within the specified time, emergency repairs performed by others shall not void the warranty and the Contractor shall reimburse the Owner for all costs incurred in connection with the performance of such repairs. This warranty is in addition to and not in lieu of any other warranties, express or implied, which may be provided by Laws and Regulations.

B. Contractor's obligation to perform and complete the Work in accordance with the Contract Documents shall be absolute. None of the following will constitute acceptance of Work that is not in accordance with the Contract Documents or a release of Contractor's obligation to perform the Work in accordance with the Contract Documents:

1. observations by Engineer;

2. recommendation by Engineer or payment by Owner of any progress or final payment;

3. the issuance of a certificate of Substantial Completion by Owner or any payment related thereto by Owner;

4. use or occupancy of the Work or any part thereof by Owner;

5. any acceptance by Owner or any failure to do so;

6. any review and approval of a Shop Drawing or Sample submittal or the issuance of a notice of acceptability by Engineer;

7. any inspection, test, or approval by others; or

8. any correction of defective Work by Owner.

6.20 Delegation of Professional Design Services

A. Contractor will not be required to provide professional design services unless such services are specifically required by the Contract Documents for a portion of the Work or unless such services are required to carry out Contractor's responsibilities for construction means, methods, techniques, sequences and procedures. Contractor shall not be required to provide professional services in violation of applicable law.

B. If professional design services or certifications by a design professional related to systems, materials or equipment are specifically required of Contractor by the Contract Documents, Contractor shall cause such services or certifications to be provided by a properly licensed professional, whose signature and seal shall appear on all drawings, calculations, specifications, certifications, Shop Drawings and other submittals prepared by such professional. Shop Drawings and other submittals related to the Work designed or certified by such professional, if prepared by others, shall bear such professional's written approval when submitted to Engineer.

C. Owner and Engineer shall be entitled to rely upon the adequacy, accuracy and completeness of the services, certifications or approvals performed by such design professionals, provided Owner and Engineer have specified to Contractor all performance and design criteria that such services must satisfy.

D. Pursuant to this Paragraph 6.20, Engineer's review and approval of design calculations and design drawings will be only for the limited purpose of checking for conformance with performance and design criteria given and the design concept expressed in the Contract Documents. Engineer's review and approval of Shop Drawings and other submittals (except design calculations and design drawings) will be only for the purpose stated in Paragraph 6.17.D.1.

E. Contractor shall not be responsible for the adequacy of the performance or design criteria required by the Contract Documents.

## ARTICLE 7 – OTHER WORK AT THE SITE

7.01 Related Work at Site

A. Owner may perform other work related to the Project at the Site with Owner's employees, or through other direct contracts therefor, or have other work performed by utility owners. If such other work is not noted in the Contract Documents, then:

1. written notice thereof will be given to Contractor prior to starting any such other work; and

2. if Owner and Contractor are unable to agree on entitlement to or on the amount or extent, if any, of any adjustment in the Contract Price or Contract Times that should be allowed as a result of such other work, a Claim may be made therefor as provided in Paragraph 10.05.

B. Contractor shall afford each other contractor who is a party to such a direct contract, each utility owner, and Owner, if Owner is performing other work with Owner's employees, proper and safe access to the Site, provide a reasonable opportunity for the introduction and storage of materials and equipment and the execution of such other work, and properly coordinate the Work with theirs. Contractor shall do all cutting, fitting, and patching of the Work that may be required to properly connect or otherwise make its several parts come together and properly integrate with such other work. Contractor shall not endanger any work of others by cutting, excavating, or otherwise altering such work; provided, however, that Contractor may cut or alter others' work with the written consent of Engineer and the others whose work will be affected. The duties and responsibilities of Contractor under this Paragraph are for the benefit of such utility owners and other contractors to the extent that there are comparable provisions for the benefit of Contractor in said direct contracts between Owner and such utility owners and other contractors.

C. If the proper execution or results of any part of Contractor's Work depends upon work performed by others under this Article 7, Contractor shall inspect such other work and promptly report to Engineer in writing any delays, defects, or deficiencies in such other work that render it unavailable or unsuitable for the proper execution and results of Contractor's Work. Contractor's failure to so report will constitute an acceptance of such other work as fit and proper for integration with Contractor's Work except for latent defects and deficiencies in such other work.

7.02 Coordination

A. If Owner intends to contract with others for the performance of other work on the Project at the Site, the following will be set forth in Supplementary Conditions:

1. the individual or entity who will have authority and responsibility for coordination of the activities among the various contractors will be identified;

2. the specific matters to be covered by such authority and responsibility will be itemized; and

3. the extent of such authority and responsibilities will be provided.

B. Unless otherwise provided in the Supplementary Conditions, Owner shall have sole authority and responsibility for such coordination.

7.03 Legal Relationships

A. Paragraphs 7.01.A and 7.02 are not applicable for utilities not under the control of Owner.

B. Each other direct contract of Owner under Paragraph 7.01.A shall provide that the other contractor is liable to Owner and Contractor for the reasonable direct delay and disruption costs incurred by Contractor as a result of the other contractor's wrongful actions or inactions.

C. Contractor shall be liable to Owner and any other contractor under direct contract to Owner for the reasonable direct delay and disruption costs incurred by such other contractor as a result of Contractor's wrongful action or inactions.

## ARTICLE 8 – OWNER'S RESPONSIBILITIES

8.01 Communications to Contractor

A. The Owner will serve as the Owners Representative. All communication relative to Contractors obligation under Agreement shall be through the Owner.

8.02 Replacement of Engineer

A. In case of termination of the employment of Engineer, Owner shall appoint an engineer to whom Contractor makes no reasonable objection, whose status under the Contract Documents shall be that of the former Engineer.

8.03 Furnish Data

A. Owner shall promptly furnish the data required of Owner under the Contract Documents, including, without limitation, (i) geotechnical engineering survey; (ii) other applicable land surveys; (iii) environmental studies of existing facilities; and (iv) all applicable reports regarding water intrusion and contamination, all of which are attached as **Composite Exhibit "C"**. Unless otherwise provided for under the Contract Documents, the Owner shall provide said information in a timely manner and Contractor shall not rely on such information without independently confirming that, in the Contractor's professional judgment, the information is reliable and accurate.

8.04 Limitations on Owner's Responsibilities

A. The Owner shall not supervise, direct, or have control or authority over, nor be responsible for, Contractor's means, methods, techniques, sequences, or procedures of construction, or the safety precautions and programs incident thereto, or for any failure of Contractor to comply with Laws and Regulations applicable to the performance of the Work. Owner will not be responsible for Contractor's failure to perform the Work in accordance with the Contract Documents.

8.05 Evidence of Financial Arrangements

A. Upon written request of Contractor, Owner shall furnish Contractor reasonable evidence that financial arrangements have been made to satisfy Owner's obligations under the Contract Documents.

8.06 Compliance with Safety Program

A. While at the Site, Owner's employees and representatives shall comply with the specific applicable requirements of Contractor's safety programs of which Owner has been informed in writing in accordance with the Contract Documents.

## ARTICLE 9 – ENGINEER'S STATUS DURING CONSTRUCTION

9.01 Owner's Representative

A. The Owner will serve as the Owners Representative. All communication relative to Contractors obligation under Agreement shall be through the Owner.

B. The Owner has engaged the services of JLA Geosciences, Inc. to design the project. The Village of Wellington will act as the Engineer during construction unless otherwise notified by Owner.

9.02 Visits to Site

A. Engineer will make visits to the Site at intervals appropriate to the various stages of construction as Engineer deems necessary in order to observe as an experienced and qualified design professional the progress that has been made and the quality of the various aspects of Contractor's executed Work. Based on information obtained during such visits and observations, Engineer, for the benefit of Owner, will determine, in general, if the Work is proceeding in accordance with the Contract Documents. Engineer will not be required to make exhaustive or continuous inspections on the Site to check the quality or quantity of the Work. Engineer's efforts will be directed toward providing for Owner a greater degree of confidence that the completed Work will conform generally to the Contract Documents. On the basis of such visits and observations, Engineer will keep Owner informed of the progress of the Work and will advise the Owner of any defective or non-conforming Work.

B. Engineer's visits and observations are subject to all the limitations on Engineer's authority and responsibility set forth in Paragraph 9.09. Particularly, but without limitation, during or as a result of Engineer's visits or observations of Contractor's Work, Engineer will not supervise, direct, control, or have authority over or be responsible for Contractor's means, methods, techniques, sequences, or procedures of construction, or the safety precautions and programs incident thereto, or for any failure of Contractor to comply with Laws and Regulations applicable to the performance of the Work.

9.03 Project Representative

A. If Owner and Engineer agree, Engineer will furnish a Resident Project Representative to assist Engineer in providing more extensive observation of the Work. The duties, responsibilities and limitations of authority of any such Resident Project Representative and assistants will be as provided in the LISTING OF THE

DUTIES, RESPONSIBILITIES AND LIMITATIONS OF AUTHORITY OF THE RESIDENT PROJECT REPRESENTATIVE (the "Listing") which will be distributed to Contractor and , as provided in Paragraph 9.09. If any conflicts exist between the Listing and Paragraph 9.09, the terms and conditions of the Listing shall govern. If Owner designates another representative or agent to represent Owner at the Site who is not Engineer's consultant, agent or employee, the responsibilities and authority and limitations thereon of such other individual or entity will be as presented at the Pre-Construction Meeting.

9.04 Authorized Variations in Work

A. Engineer may authorize minor variations in the Work from the requirements of the Contract Documents which do not involve an adjustment in the Contract Price or the Contract Times and are compatible with the design concept of the completed Project as a functioning whole as indicated by the Contract Documents. These may be accomplished by a Field Order and will be binding on Owner and also on Contractor, who shall perform the Work involved promptly. If Owner or Contractor believes that a Field Order justifies an adjustment in the Contract Price or Contract Times, or both, Contractor shall so notify Owner in writing within five (5) business days of receipt of the Field Order, and if the parties are unable to agree on entitlement to or on the amount or extent, if any, of any such adjustment, a Claim may be made therefor as provided in Paragraph 10.05.

9.05 Rejecting Defective Work

A. Engineer will have authority to reject Work which Engineer believes to be defective, or that Engineer believes will not produce a completed Project that conforms to the Contract Documents or that will prejudice the integrity of the design concept of the completed Project as a functioning whole as indicated by the Contract Documents. Engineer will also have authority to require special inspection or testing of the Work as provided in Paragraph 13.04, whether or not the Work is fabricated, installed, or completed. Owner shall also have the same rights as Engineer to reject Work which it believes to be defective, which it believes will not produce a completed Project that conforms to the Contract Documents, or which it believes that will prejudice the integrity of the design concept of the completed Project as a functioning whole as indicated by the Contract Documents.

9.06 Shop Drawings, Change Orders and Payments

A. In connection with Engineer's authority, and limitations thereof, as to Shop Drawings and Samples, see Paragraph 6.17.

B. In connection with Engineer's authority, and limitations thereof, as to design calculations and design drawings submitted in response to a delegation of professional design services, if any.

C. In connection with Engineer's authority as to Change Orders, see Articles 10, 11, and 12.

D. In connection with Engineer's authority as to Applications for Payment, see Article 14.

9.07 Determinations for Unit Price Work

A. Engineer will determine the actual quantities and classifications of Unit Price Work performed by Contractor. Engineer will review with Contractor the Engineer's preliminary determinations on such matters before rendering a written decision thereon (by recommendation of an Application for Payment or otherwise). Engineer's written decision thereon will be final and binding (except as modified by Engineer to reflect changed factual conditions or more accurate data) upon Owner and Contractor, subject to the provisions of Paragraph 10.05.

9.08 Decisions on Requirements of Contract Documents and Acceptability of Work

A. Engineer will be the initial interpreter of the requirements of the Contract Documents and judge of the acceptability of the Work thereunder. All matters in question and other matters between Owner and

Contractor arising prior to the date final payment is due relating to the acceptability of the Work, and the interpretation of the requirements of the Contract Documents pertaining to the performance of the Work, will be referred initially to Engineer in writing within 14 days of the event giving rise to the question.

B. In no event, shall Contractor cease performance of the Work as the result of referring a matter to the Engineer regarding or relating to the acceptability of the Work and/or the interpretation of the requirements of the Contract Documents pertaining to the performance of the Work.

C. Engineer will, with reasonable promptness, render a written decision on the issue referred. If Owner or Contractor believes that any such decision entitles them to an adjustment in the Contract Price or Contract Times or both, a Claim may be made under Paragraph 10.05.

D. Engineer's written decision on the issue referred will be neither final nor binding on Owner and Contractor, and is subject to the provisions of Paragraph 10.05.

E. When functioning as interpreter and judge under this Paragraph 9.08, Engineer will not show partiality to Owner or Contractor and will not be liable in connection with any interpretation or decision rendered in good faith in such capacity.

9.09 Limitations on Engineer's Authority and Responsibilities

A. Neither Engineer's authority or responsibility under this Article 9 or under any other provision of the Contract Documents nor any decision made by Engineer in good faith either to exercise or not exercise such authority or responsibility or the undertaking, exercise, or performance of any authority or responsibility by Engineer shall create, impose, or give rise to any duty in contract, tort, or otherwise owed by Engineer to Contractor, any Subcontractor, any Supplier, any other individual or entity, or to any surety for or employee or agent of any of them.

B. Engineer will not supervise, direct, control, or have authority over or be responsible for Contractor's means, methods, techniques, sequences, or procedures of construction, or the safety precautions and programs incident thereto, or for any failure of Contractor to comply with Laws and Regulations applicable to the performance of the Work. Engineer will not be responsible for Contractor's failure to perform the Work in accordance with the Contract Documents.

C. Engineer will not be responsible for the acts or omissions of Contractor or of any Subcontractor, any Supplier, or of any other individual or entity performing any of the Work.

D. Engineer's review of the final Application for Payment and accompanying documentation and all maintenance and operating instructions, schedules, guarantees, bonds, certificates of inspection, tests and approvals, and other documentation required to be delivered by Paragraph 14.07.A will only be to determine generally that their content complies with the requirements of, and in the case of certificates of inspections, tests, and approvals that the results certified indicate compliance with, the Contract Documents.

E. The limitations upon authority and responsibility set forth in this Paragraph 9.09 shall also apply to the Resident Project Representative, if any, and assistants, if any.

9.10 Compliance with Safety Program

A. While at the Site, Engineer's employees and representatives shall comply with the specific applicable requirements of Contractor's safety programs of which Engineer has been informed pursuant to Paragraph 6.13.D.

## ARTICLE 10 – CHANGES IN THE WORK; CLAIMS

10.01 Authorized Changes in the Work

A. Without invalidating the Contract and without notice to any surety, Owner may, at any time or from time to time, order additions, deletions, or revisions in the Work by a Change Order, or a Construction Change Directive. Upon receipt of any such document, Contractor shall promptly proceed with the Work involved which will be performed under the applicable conditions of the Contract Documents (except as otherwise specifically provided).

B. If Owner and Contractor are unable to agree on entitlement to, or on the amount or extent, if any, of an adjustment in the Contract Price or Contract Times, or both, that should be allowed as a result of a Construction Change Directive, a Claim may be made therefor as provided in Paragraph 10.05, but Contractor shall be required to perform the Work and Owner shall be required to continue to make undisputed payments under the Contract Documents.

C. Any changes in the Work or any adjustment in the Contract Price or the Contract Time shall only be made upon written Change Order or Construction Change Directive as provided herein. If Contractor proceeds with such work without obtaining a written Change Order or Construction Change Directive, it shall be assumed that Contractor has performed such work at no additional charge. The requirement for writing under this Article cannot be waived

10.02 Unauthorized Changes in the Work

A. Contractor shall not be entitled to an increase in the Contract Price or an extension of the Contract Times with respect to any work performed that is not required by the Contract Documents as amended, modified, or supplemented as provided in Paragraph 3.04, authorized by written Change Order or Construction Change Directive, except in the case of an emergency as provided in Paragraph 6.16 or in the case of uncovering Work as provided in Paragraph 13.04.D.

10.03 Execution of Change Orders & Construction Change Directives

A. A Change Order shall be based upon agreement between the Owner and Contractor and approved by Engineer, based on auditable documentation of the costs incurred, if any, and shall be executed upon any of the following:

1. changes in the Work which are: (i) ordered by Owner pursuant to Paragraph 10.01.A, (ii) required because of acceptance of defective Work under Paragraph 13.08.A or Owner's correction of defective Work under Paragraph 13.09, or (iii) agreed to by the parties;

2. changes in the Contract Price or Contract Times which are agreed to by the parties, including any undisputed sum or amount of time for Work actually performed in accordance with a Construction Change Directive; and

3. changes in the Contract Price or Contract Times which embody the substance of any written decision rendered by Engineer pursuant to Paragraph 10.05 if agreed to by the parties.

B. Among other circumstances, a Construction Change Directive may be issued where the Contractor believes it is entitled to a Change Order or otherwise to an increase in the Contract Price or Contract Time, but the Owner does not agree or if the parties cannot agree on the amount or duration of any change to the Contract Price or Contract Time. In such event, the Contractor is obligated to perform the Work described in the Construction Change Directive in accordance with this Paragraph. Changes in the Work shall be performed under applicable provisions of the Contract Documents, and the Contractor shall proceed promptly, unless otherwise provided in the Change Order or Construction Change Directive. A Construction Change Directive is a written order signed by the Owner directing a change in the Work prior to agreement on adjustment, if any, in the Contract Price or Contract Time, or both. The Owner may by Construction Change Directive, without invalidating the Agreement, order changes in the Work within the general scope

of the Agreement consisting of additions, deletions or other revisions, the Contract Price and Contract Time being adjusted accordingly.

1. If the Construction Change Directive provides for an adjustment to the Contract Price, the adjustment shall be based on one of the following methods:

   a. Mutual acceptance of a lump sum properly itemized and supported by sufficient substantiating data to permit evaluation;

   b. Unit prices stated in the Contract Documents or subsequently agreed upon;

   c. Cost to be determined in a manner agreed upon by the parties and a mutually acceptable fixed or percentage fee; or

   d. As provided in Article 11.

3. Upon receipt of a Construction Change Directive, the Contractor shall promptly proceed with the change in the Work involved and advise the Owner and Engineer of the Contractor's agreement or disagreement with the method, if any, provided in the Construction Change Directive for determining the proposed adjustment in the Contract Price or Contract Time. Disagreement as to the adjustment to the Contract Price or Contract Time shall not excuse Contractor from its prompt performance of the Work described in the Construction Change Directive.

4. A Construction Change Directive signed by the Contractor indicates the Contractor's agreement therewith, including adjustment in Contract Price and Contract Time or the method for determining them. Such agreement shall be effective immediately and shall be recorded as a Change Order.

5. Deductions of Work ("Deductive Change Orders"). The Owner reserves the right to remove any items from the scope of Work in the Contract Documents by Deductive Change Order. Such deduction shall be determined by the Engineer using the Contractor's Schedule of Values. The deductions, if any, shall not be considered a cardinal change to the Agreement. The parties hereto recognize that the Owner has materially relied on this provision in entering into contract with Contractor. Such value deduction shall be conclusive as it relates to utilizing the Contractor's Schedule of Values.

10.04 Notification to Surety

A. Any bonds issued in connection with the Work shall contain a provision that surety waives notices of any changes to the Contract Documents. However, to the extent any notice of any changes to the Contract Documents requires notice to any surety, the giving of any such notice will be Contractor's responsibility. The amount of each applicable bond shall automatically be adjusted to reflect the effect of any such change.

10.05 Claims

A. *Engineer's Decision Required:* All Claims, except those waived pursuant to Paragraph 14.09 of the General Conditions, shall be referred to the Engineer for decision. A decision by Engineer shall be required as a condition precedent to any exercise by Owner or Contractor of any rights or remedies either may otherwise have under the Contract Documents or by Laws and Regulations in respect of such Claims, unless Engineer fails to render a decision in the time periods required by the Contract Documents.

B. *Notice:* Written notice stating the general nature of each Claim shall be delivered by the claimant to Engineer and the other party to the Contract promptly (but in no event later than 14 days) after the start of the event giving rise thereto. The responsibility to substantiate a Claim shall rest with the party making the Claim. Notice of the amount or extent of the Claim, with supporting data shall be delivered to the Engineer and the other party to the Contract within 30 days after the start of such event (unless Engineer allows additional time for claimant to submit additional or more accurate data in support of such Claim). A Claim

for an adjustment in Contract Price shall be prepared in accordance with the provisions of Paragraph 12.01.A. A Claim for an adjustment in Contract Times shall be prepared in accordance with the provisions of Paragraph 12.02.A. Each Claim shall be accompanied by claimant's written statement that the adjustment claimed is the entire adjustment to which the claimant believes it is entitled as a result of said event. The opposing party shall submit any response to Engineer and the claimant within 30 days after receipt of the claimant's last submittal (unless Engineer allows additional time).

C. *Engineer's Action:* Engineer will review each Claim and, within 14 days after receipt of the last submittal of the claimant or the last submittal of the opposing party if any, take one of the following actions in writing:

1. deny the Claim in whole or in part;

2. approve the Claim; or

3. notify the parties that the Engineer is unable to resolve the Claim if, in the Engineer's sole discretion, it would be inappropriate for the Engineer to do so. For purposes of further resolution of the Claim, such notice shall be deemed a denial.

D. In the event that Engineer does not take action on a Claim within said 14 days, the Claim shall be deemed denied.

E. Engineer's written decision shall not be binding on the parties unless expressly agreed to by the parties.

F. No Claim for an adjustment in Contract Price or Contract Times will be valid if not submitted in accordance with this Paragraph 10.05.

## ARTICLE 11 –ALLOWANCES & UNIT PRICE WORK

11.01 Allowances

A. It is understood that Contractor has included in the Contract Price all allowances so named in the Contract Documents as part of **Exhibit "G"** and shall cause the Work so covered to be performed for such sums and by such persons or entities as may be acceptable to Owner and Engineer. Unless otherwise provided in the Contract Documents:

**1.** allowances shall cover the cost to the Contractor of materials and equipment delivered at the Site and all required taxes, less applicable trade discounts;

**2.** Contractor's costs for unloading and handling at the Site, labor, installation costs, overhead, profit, general conditions, insurance, bonds and other expenses contemplated for stated allowance amounts shall be included in the Contract Price but not in the allowances; and

**3.** whenever costs for the actual allowance item (materials and equipment) are more than or less than allowances, the Contract Price shall be adjusted accordingly by Change Order. The amount of the Change Order shall reflect (1) the difference between actual costs and the allowances under this Paragraph and (2) changes in Contractor's costs.

Contractor shall notify Owner to make selection of materials and equipment under an allowance in sufficient time to avoid delay in the Work.

11.02 Contingency

A. Any contingency listed in the Schedule of Values (the "Contingency") may only be utilized by the Owner, in its sole discretion, for any purpose, including, but not limited to covering unanticipated costs in the Work. The Contractor shall not be entitled to use the Contingency without the prior written approval of Owner, which may be withheld in its sole discretion. In no event shall the Contingency be used for the Contractor's gross negligence; for costs reasonably recoverable from insurance, subcontractors, supplier or sureties; for funding punch list work; for funding the coordination of subcontractors and other entities; for resolving conflicts in the field; for funding costs incurred as a result of a default on the part of Contractor unless Owner approves in writing, or for any other direct costs of performance not approved in writing by Owner. Any Contingency that is not used (the "Contingency Savings") will accrue 100% to the Owner and shall result in a credit to Owner and result in a reduction towards to the outstanding balance of the Contract Price.

11.03 Unit Price Work

A. Where the Contract Documents provide that all or part of the Work is to be Unit Price Work, initially the Contract Price will be deemed to include for all Unit Price Work an amount equal to the sum of the unit price for each separately identified item of Unit Price Work times the estimated quantity of each item as indicated in the Contract Documents.

B. The estimated quantities of items of Unit Price Work are not guaranteed and are solely for the purpose of comparison of bids and determining an initial Contract Price. Determinations of the actual quantities and classifications of Unit Price Work performed by Contractor will be made by Engineer subject to the provisions of Paragraph 9.07.

C. Each unit price will be deemed to include an amount considered by Contractor to be adequate to cover Contractor's overhead and profit for each separately identified item.

D. Contractor may not make a Claim in accordance with paragraph 10.05 for additional expenses incurred as a result of a difference between final quantity of any item(s) of Unit Price Work and the estimated quantity of such item(s) in the Contract Documents. Owner may make a claim for an adjustment in the Contract Price in accordance with paragraph 10.05 if the Owner believes that Owner is entitled to a decrease in Contract Price and the parties are unable to agree as to the amount of such decrease.

## ARTICLE 12 – CHANGE OF CONTRACT PRICE; CHANGE OF CONTRACT TIMES

12.01 Change of Contract Price

A. The Contract Price may only be changed by a Change Order. Any Claim for an adjustment in the Contract Price shall be based on written notice submitted by the party making the Claim to the Engineer and the other party to the Contract in accordance with the provisions of Paragraph 10.05.

12.02 Change of Contract Times

A. The Contract Times may only be changed by a Change Order. Any Claim for an adjustment in the Contract Times shall be based on written notice submitted by the party making the Claim to the Engineer and the other party to the Contract in accordance with the provisions of Paragraph 10.05.

12.03 Delays

A. If Contractor is delayed in the performance or progress of the Work by fire, flood, epidemic, abnormal weather conditions, acts of God, acts or failures to act of utility owners not under the control of Owner, or other causes not the fault of and beyond control of Contractor, then Contractor shall be entitled to an equitable adjustment in Contract Time, if such delay results in an impact to the critical path of the schedule as determined by Engineer. Such an adjustment in the Contract Time shall be Contractor's sole and

exclusive remedy for the delays described in this Paragraph 12.03. Claims for abnormal weather conditions shall be documented by data substantiating the weather conditions were abnormal for the period of time, could not have been reasonably anticipated and had an adverse effect on the scheduled construction. No extension of the Contract Time shall be granted for delays resulting from normal weather conditions prevailing in the area as defined by the average of the last five (5) years of weather recorded by the Owner. The parties agree that time is of the essence in the performance of this Agreement.

B. Owner, Engineer, and their officers, directors, members, partners, employees, agents, consultants, or subcontractors shall not be liable to Contractor for any claims, costs, losses, or damages (including but not limited to all fees and charges of engineers, architects, attorneys, and other professionals and all court or arbitration or other dispute resolution costs) sustained by Contractor on or in connection with any other project or anticipated project.

C. Contractor shall not be entitled to an adjustment in Contract Price or Contract Time for delays within the control of Contractor, any Subcontractor, Supplier or any other person or entity for which Contractor is responsible.

D. NO CLAIM FOR DAMAGES OR ANY CLAIM OTHER THAN FOR AN EXTENSION OF TIME SHALL BE MADE OR ASSERTED AGAINST OWNER BY REASON OF ANY DELAYS. Contractor shall not be entitled to an increase in the Contract Price or payment or compensation of any kind from Owner for direct, indirect, consequential, impact or other costs, expenses, or damages, including, but not limited to, costs of acceleration or inefficiency, arising because of delay, disruption, interference, or hindrance be reasonable or unreasonable, foreseeable, or avoidable or unavoidable. Contractor shall be entitled only to extensions of the Contract Time as the sole and exclusive remedy for such resulting delays, in accordance with and to the extent specifically provided herein.

## ARTICLE 13 – TESTS AND INSPECTIONS; CORRECTION, REMOVAL OR ACCEPTANCE OF DEFECTIVE WORK

13.01 Notice of Defects

A. Notice of all defective Work of which Owner has actual knowledge will be given to Contractor. Defective Work may be rejected, corrected, or accepted as provided in this Article 13.

13.02 Access to Work

A. Owner, Engineer, their consultants and other representatives and personnel of Owner, independent testing laboratories, and governmental agencies with jurisdictional interests over the Work and Site will have access to the Site and the Work at reasonable times for their observation, inspection, and testing. Contractor shall provide them proper and safe conditions for such access and advise them of Contractor's safety procedures and programs so that they may comply therewith as applicable.

13.03 Tests and Inspections

A. Contractor shall give no less than forty-eight hours notice to Engineer and Owner for all required inspections, tests, or approvals, except as otherwise provided, and shall cooperate with inspection and testing personnel to facilitate required inspections, tests or approvals.

B. Owner shall employ and pay for the services of an independent testing laboratory to perform all inspections, tests, or approvals required by the Contract Documents except:

1. for inspections, tests, or approvals covered by Paragraphs 13.03.C and 13.03.D below;

2. that costs incurred in connection with tests or inspections conducted pursuant to Paragraph 13.04.B shall be paid as provided in Paragraph 13.04.C; and

3. for inspection, tests, or approvals due to defective or non-conforming Work, or as otherwise specifically provided in the Contract Documents.

C. If Laws or Regulations of any public body having jurisdiction require any Work (or part thereof) specifically to be inspected, tested, or approved by an employee or other representative of such public body, Contractor shall assume full responsibility for arranging and obtaining such inspections, tests, or approvals, pay all costs in connection therewith, and furnish Engineer the required certificates of inspection or approval.

D. Contractor shall be responsible for arranging and obtaining and shall pay all costs in connection with any inspections, tests, or approvals required for Owner's and Engineer's acceptance of materials or equipment to be incorporated in the Work; or acceptance of materials, mix designs, or equipment submitted for approval prior to Contractor's purchase thereof for incorporation in the Work. Such inspections, tests, or approvals shall be performed by organizations acceptable to Owner and Engineer.

E. Contractor shall pay all governmental charges and inspection fees necessary for the prosecution of the Work which are applicable at the time of the Effective Date of the Agreement. Owner shall pay all charges of utility owners for connections for providing permanent service to the Work.

13.04 Uncovering Work

A. If any Work (or the work of others) that is to be inspected, tested, or approved pursuant to Paragraph 13.03 above, is covered by Contractor without written concurrence of Engineer, Contractor shall, if requested by Engineer, uncover such Work for observation. Uncovering Work shall be at Contractor's expense unless Contractor has given Engineer timely notice of Contractor's intention to cover the same and Engineer has not acted with reasonable promptness in response to such notice.

B. If any Work is covered contrary to the written request of Engineer, it must, if requested by Engineer, be uncovered for Engineer's observation and replaced at Contractor's expense.

C. If Engineer considers it necessary or advisable that covered Work be observed by Engineer or inspected or tested by others, Contractor, at Engineer's request, shall uncover, expose, or otherwise make available for observation, inspection, or testing as Engineer may require, that portion of the Work in question, furnishing all necessary labor, material, and equipment.

D. If it is found that the uncovered Work is defective, Contractor shall pay all claims, costs, losses, and damages (including but not limited to all fees and charges of engineers, architects, attorneys, and other professionals and all court or arbitration or other dispute resolution costs) arising out of or relating to such uncovering, exposure, observation, inspection, and testing, and of satisfactory replacement or reconstruction (including but not limited to all costs of repair or replacement of work of others); and Owner shall be entitled to an appropriate decrease in the Contract Price. If the parties are unable to agree as to the amount thereof, Owner may make a Claim therefor as provided in Paragraph 10.05.

E. If the uncovered Work is not found to be defective, Contractor shall be allowed an increase in the Contract Price or an extension of the Contract Times, or both, directly attributable to such uncovering, exposure, observation, inspection, testing, replacement, and reconstruction. If the parties are unable to agree as to the amount or extent thereof, Contractor may make a Claim therefor as provided in Paragraph 10.05.

13.05 Owner May Stop the Work

A. If the Work is defective, or Contractor fails to supply sufficient skilled workers or suitable materials or equipment, or fails to perform the Work in such a way that the completed Work will conform to the Contract Documents, Owner may order Contractor to stop the Work, or any portion thereof, until the cause for such order has been eliminated; however, this right of Owner to stop the Work shall not give rise to any

duty on the part of Owner to exercise this right for the benefit of Contractor, any Subcontractor, any Supplier, any other individual or entity, or any surety for, or employee or agent of any of them. Notwithstanding the foregoing, any stoppage ordered in the Work by Owner, shall not result in a Claim for an increase in the Contract Price or Contract Time by Contractor.

13.06 Correction or Removal of Defective Work

A. Within three (3) days after receipt of written notice from the Engineer, Contractor shall correct all defective Work, whether or not fabricated, installed, or completed, or, if the Work has been rejected by Engineer, remove it from the Project and replace it with Work that is not defective. Contractor shall pay all claims, costs, losses, and damages (including but not limited to all fees and charges of Engineer, engineers, architects, attorneys, and other professionals and all court or arbitration or other dispute resolution costs) arising out of or relating to such correction or removal (including but not limited to all costs of repair or replacement of work of others).

B. When correcting defective Work under the terms of this Paragraph 13.06 or Paragraph 13.07, Contractor shall take no action that would void or otherwise impair Owner's special warranty and guarantee, if any, on said Work.

13.07 Correction Period

A. If within one year after the date of Substantial Completion (or such longer period of time as may be prescribed by the terms of any applicable special guarantee required by the Contract Documents) or by any specific provision of the Contract Documents, any Work is found to be defective, or if the repair of any damages to the land or areas made available for Contractor's use by Owner or permitted by Laws and Regulations as contemplated in Paragraph 6.11.A is found to be defective, Contractor shall promptly, without cost to Owner and in accordance with Owner's written instructions:

1. repair such defective land or areas; or

2. correct such defective Work; or

3. if the defective Work has been rejected by Owner, remove it from the Project and replace it with Work that is not defective, and

4. satisfactorily correct or repair or remove and replace any damage to other Work, to the work of others or other land or areas resulting therefrom.

B. If Contractor does not promptly comply with the terms of Owner's written instructions, or in an emergency where delay would cause serious risk of loss or damage, Owner may have the defective Work corrected or repaired or may have the rejected Work removed and replaced. All claims, costs, losses, and damages (including but not limited to all fees and charges of engineers, architects, attorneys, and other professionals and all court or arbitration or other dispute resolution costs) arising out of or relating to such correction or repair or such removal and replacement (including but not limited to all costs of repair or replacement of work of others) will be paid by Contractor.

C. Where defective Work (and damage to other Work resulting therefrom) has been corrected or removed and replaced under this Paragraph 13.07, the correction period hereunder with respect to such Work will be extended for an additional period of one year after such correction or removal and replacement has been satisfactorily completed, or for the remaining period of time of any applicable special guarantee by the Contract Documents, whichever is longer.

D. Contractor's obligations under this Paragraph 13.07 are in addition to any other obligation or warranty. The provisions of this Paragraph 13.07 shall not be construed as a substitute for, or a waiver of, the provisions of any applicable statute of limitation or repose.

13.08 Acceptance of Defective Work

A. If, instead of requiring correction or removal and replacement of defective Work, Owner (and, prior to Engineer's recommendation of final payment) prefers to accept it, Owner may do so. Contractor shall pay all claims, costs, losses, and damages (including but not limited to all fees and charges of engineers, architects, attorneys, and other professionals and all court or arbitration or other dispute resolution costs) attributable to Owner's evaluation of and determination to accept such defective Work (such costs to be approved by Engineer as to reasonableness) and for the diminished value of the Work to the extent not otherwise paid by Contractor pursuant to this sentence. If any such acceptance occurs prior to Engineer's recommendation of final payment, a Change Order will be issued incorporating the necessary revisions in the Contract Documents with respect to the Work, and Owner shall be entitled to an appropriate decrease in the Contract Price, reflecting the diminished value of Work so accepted. If the parties are unable to agree as to the amount thereof, Owner may make a Claim therefor as provided in Paragraph 10.05. If the acceptance occurs after such recommendation, an appropriate amount will be paid by Contractor to Owner.

13.09 Owner May Correct Defective or Non-conforming Work

A. If Contractor fails within three (3) days after written notice from Engineer to correct defective or non-conforming Work, or to remove and replace rejected Work as required by Engineer in accordance with Paragraph 13.06.A, or if Contractor fails to perform the Work in accordance with the Contract Documents, or if Contractor fails to comply with any other provision of the Contract Documents, Owner may, after seven days written notice to Contractor, correct, or remedy any such deficiency.

B. In exercising the rights and remedies under this Paragraph 13.09, Owner shall proceed expeditiously. In connection with such corrective or remedial action, Owner may exclude Contractor from all or part of the Site, take possession of all or part of the Work and suspend Contractor's services related thereto, take possession of Contractor's tools, appliances, construction equipment and machinery at the Site, and incorporate in the Work all materials and equipment stored at the Site or for which Owner has paid Contractor but which are stored elsewhere. Contractor shall allow Owner, Owner's representatives, agents and employees, Owner's other contractors, and Engineer and Engineer's consultants access to the Site to enable Owner to exercise the rights and remedies under this Paragraph.

C. All claims, costs, losses, and damages (including but not limited to all fees and charges of engineers, architects, attorneys, and other professionals and all court or arbitration or other dispute resolution costs and all costs for acceleration, additional forces or overtime) incurred or sustained by Owner in exercising the rights and remedies under this Paragraph 13.09 will be charged against Contractor, and a Change Order will be issued incorporating the necessary revisions in the Contract Documents with respect to the Work; and Owner shall be entitled to an appropriate decrease in the Contract Price. Further, Owner's exercise of its rights under this Article shall not be construed to be a waiver of liquidated damages for delay and shall be in addition to any other or further remedies available Owner under the Contract Documents.

D. Contractor shall not be allowed an extension of the Contract Times because of any delay in the performance of the Work attributable to the exercise by Owner of Owner's rights and remedies under this Paragraph 13.09.

## ARTICLE 14 – PAYMENTS TO CONTRACTOR AND COMPLETION

14.01 Schedule of Values

A. The Schedule of Values established pursuant to Paragraph 2.05.A of the General Conditions will serve as the basis for progress payments and will be incorporated into a form of Application for Payment acceptable to Owner/Engineer.

14.02 Progress Payments

A. *Applications for Payments:*

1. At least 20 days before the date established in the Agreement for each progress payment to be paid by Owner (but not more often than once a month), Contractor shall submit to Engineer and Owner for review an Application for Payment on AIA forms G702 and G703 and filled out and signed by Contractor based on the completion and progress of the project, and for Unit Price Work, based on the number of units completed as of the date of the Application and accompanied by such supporting documentation as is required by the Contract Documents. For the Unit Price Work, Contractor shall not be entitled to payment for the performance of any quantities of the Unit Price Work unless prior to performing same the quantities are verified and approved, in writing, by the Engineer. If the Contractor proceeds with any Unit Price Work without obtaining the prior written approval of the Engineer, the Contractor shall not be entitled to payment for the performance of such Unit Price Work. If payment is requested on the basis of materials and equipment not incorporated in the Work but delivered and suitably stored at the Site or at another location agreed to in writing, the Application for Payment shall also be accompanied by a bill of sale, invoice, or other documentation warranting that Owner has received the materials and equipment free and clear of all Liens and evidence that the materials and equipment are covered by appropriate property insurance or other arrangements to protect Owner's interest therein, all of which must be satisfactory to Owner. Notwithstanding the foregoing, each Application for Payment shall show a complete breakdown of the Project components, the quantities completed and the amounts due, together with such data substantiating the Contractor's right to payment and such supporting evidence which may be requested by the Engineer or Owner including, but not limited to: (a) all Subcontractor requisitions; (b) where required by any manufacturers for extended warranties, inspection certificates or other acceptable documentation confirming the acceptable completion of any and all required inspections for the Work performed for which payment is being made; (c) all monthly reports required by any federal, state or local requirements including.

2. In addition, as a further condition to payment of each progress payment, Contractor shall: (i) submit partial release of lien from Contractor for the current Application for Payment, submit partial releases of lien from all laborers, material suppliers and Subcontractors through the date of the last payment made, and such other evidence that the Owner may reasonably require substantiating that all Work which is the subject of each such Application for Payment has been performed. The releases of lien form shall conform to the Florida's Construction Lien Law 713.01 et. seq. and/or Fla. Stat. § 255.05, and shall be in such forms as approved by the Owner. An updated Progress schedule shall be submitted at least monthly to the Owner and Engineer**.** Submission of the updated Progress schedule shall not serve as notice of delays and shall not be construed as Owner's consent to extensions of the Contract Time. Each Application for Payment shall be submitted in triplicate to the Engineer for approval.

3. Beginning with the second Application for Payment, each Application of Payment shall include an affidavit of Contractor stating that all previous progress payments received on account of the Work, have been applied on account to discharge Contractor's legitimate obligations associated with prior Applications for Payment. Commencing with the second Application for Payment, each Application for Payment shall also include unconditional partial releases of lien from all laborers, material suppliers and Subcontractors covering the prior progress payment to Contractor.

4. The amount of retainage with respect to progress payments will be as stipulated in the Agreement and shall be in accordance with Florida law.

B. *Review of Applications:*

1. Engineer will, within 10 days after receipt of each Application for Payment, either indicate in writing a recommendation of payment and present the Application for Payment to Owner or return the Application for Payment to Contractor indicating in writing Engineer's reasons for refusing to recommend payment. In the latter case, Contractor may make the necessary corrections and resubmit the Application for Payment.

2. Engineer's recommendation of any payment requested in an Application for Payment will constitute a representation by Engineer to Owner, based on Engineer's observations of the executed Work as an experienced and qualified design professional, and on Engineer's review of the Application for Payment and the accompanying data and schedules, that to the best of Engineer's knowledge, information and belief:

    a. the Work has progressed to the point indicated in the most recent Progress Schedule;

    b. the quality of the Work is generally in accordance with the Contract Documents (subject to an evaluation of the Work as a functioning whole prior to or upon Substantial Completion, the results of any subsequent tests called for in the Contract Documents, a final determination of quantities and classifications for Unit Price Work under Paragraph 9.07, and any other qualifications stated in the recommendation); and

    c. the conditions precedent to Contractor's being entitled to such payment appear to have been fulfilled in so far as it is Engineer's responsibility to observe the Work.

3. By recommending any such payment, Engineer will not thereby be deemed to have represented that:

    a. inspections made to check the quality or the quantity of the Work as it has been performed have been exhaustive, extended to every aspect of the Work in progress, or involved detailed inspections of the Work beyond the responsibilities specifically assigned to Engineer in the Contract Documents; or

    b. there may not be other matters or issues between the parties that might entitle Contractor to be paid additionally by Owner or entitle Owner to withhold payment to Contractor.

4. Neither Engineer's review of Contractor's Work for the purposes of recommending payments nor Engineer's recommendation of any payment, including final payment, will impose responsibility on Engineer:

    a. to supervise, direct, or control the Work, or

    b. for the means, methods, techniques, sequences, or procedures of construction, or the safety precautions and programs incident thereto, or

    c. for Contractor's failure to comply with Laws and Regulations applicable to Contractor's performance of the Work, or

    d. to make any examination to ascertain how or for what purposes Contractor has used the moneys paid on account of the Contract Price, or

    e. to determine that title to any of the Work, materials, or equipment has passed to Owner free and clear of any Liens.

5. Engineer may refuse to recommend the whole or any part of any payment if, in Engineer's opinion, it would be incorrect to make the representations to Owner stated in Paragraph 14.02.B.2. Engineer may also refuse to recommend any such payment or, because of subsequently discovered evidence or the results of subsequent inspections or tests, revise or revoke any such payment recommendation previously made, to such extent as may be necessary in Engineer's opinion to protect Owner from loss because:

    a. the Work is defective, or completed Work has been damaged, requiring correction or replacement;

b. the Contract Price has been reduced by Change Orders;

c. Owner has been required to correct defective Work or complete Work of Contractor;

d. Engineer has actual knowledge of the occurrence of any of the events enumerated in Paragraph 15.02.A;

e. Claims filed or reasonable evidence indicating probable filing of claims by other parties against Contractor;

f. Failure of Contractor to make payments properly to Subcontractors or suppliers or for material or labor;

g. Damage to the work of another Contractor, Subcontractor, supplier, materialmen, party, or person not remedied;

h. Liquidated damages pursuant to Article 4.2 and 4.3 of the Agreement; and

i. Any other breach of the Agreement by Contractor.

C. *Payment Becomes Due:*

1. Ten days after presentation of the Application for Payment to Owner with Engineer's recommendation or no later than the 10th day of the following month, the amount recommended will (subject to the provisions of Paragraph 14.02.D) become due, and when due will be paid by Owner to Contractor.

2. When the Contractor herein receives payment from the Owner for labor, services or materials furnished by subcontractor and suppliers hired by the Contractor, the Contractor shall remit payment due those parties within ten (10) days after receipt of payment from the Owner, unless otherwise provided for by Florida Law. Further, when a subcontractor receives payment from the Contractor for labor, services, or materials furnished by subcontractors and suppliers hired by the subcontractor, the subcontractor shall remit payment due to those subcontractors and suppliers within 7 days after the subcontractor's receipt of payment.

3. The receipt of each progress payment by Contractor, a subcontractor or material supplier shall constitute a waiver of claims by that payee, except for those expressly made in writing by that payee as disputed and unsettled at the time of the subject progress payment.

D. *Reduction in Payment:*

1. Owner may refuse to make payment of the full or any amount recommended by Engineer because:

a. claims have been made against Owner on account of Contractor's performance or furnishing of the Work;

b. Liens have been filed in connection with the Work, except where Contractor has delivered a specific bond satisfactory to Owner to secure the satisfaction and discharge of such Liens;

c. there are other items entitling Owner to a set-off against the amount recommended; or

d. For any of the reasons which the Engineer may withhold or reduce certification of payment pursuant to Article 14.02(B)(5) or Owner has actual knowledge of the

occurrence of any of the events enumerated in Paragraphs 14.02.B.5.a through 14.02.B.5.c or Paragraph 15.02.A.

2. If Owner refuses to make payment of the full or any amount recommended by Engineer, Owner will give Contractor written notice within three (3) days of receipt of Engineer's certification (with a copy to Engineer) stating the reasons for such action and promptly pay Contractor any amount remaining after deduction of the amount so withheld. Owner shall promptly pay Contractor the amount so withheld, or any adjustment thereto agreed to by Owner and Contractor, when Contractor remedies the reasons for such action. Any amount withheld by Owner shall not give rise to a reason or justification for Contractor to stop performing the Work, provided Owner complies with the notice requirement stated herein and pays any undisputed amounts.

3. The Owner may, but shall not be obligated to, upon the issuance of a notice of non-payment by a Subcontractor, supplier or materialmen, or any other lienor, or claimant as defined by §255.05, Florida Statutes, make all or any portion of any progress payment by check payable jointly to the order of Contractor and any lienor giving timely notice, or may make such payment directly to such lienor and deduct said sum from the balance then due Contractor. However, such payment, if made, shall not create any third party beneficiary or other rights in such lienor or claimant. In making such payments to lienors or claimant, the Owner shall require such lienor or claimant to execute the applicable release of lien or the Waiver of Right to Claim Against Bond form in accordance with §255.05, Florida Statutes.

14.03 Contractor's Warranty of Title

A. Contractor warrants and guarantees that title to all Work, materials, and equipment covered by any Application for Payment, whether incorporated in the Project or not, will pass to Owner no later than the time of payment free and clear of all Liens.

14.04 Substantial Completion

A. Substantial Completion is the stage in the progress of the Work when the Work or designated portion thereof is sufficiently complete in accordance with the Contract Documents so that the Owner can occupy or use the Work or a portion thereof for its intended use and that the following minimum requirements are met:

1. The Work is complete, ready for occupancy, and all persons or entities having jurisdiction over the Project have issued the appropriate permits, authorizations, and temporary certificates of occupancy for the Project, and the Work has passed all necessary inspections;

2. The exterior elements, such as Site cleanup and restoration (including without limitation removal of all excess materials, rock, sand, paving, debris, supplies, equipment, temporary structures, and trailers), paving, parking, landscaping and exterior building finishes, the interior spaces and finishes of the Work and all mechanical, electrical, plumbing and technical systems required by the Contract Documents, fire and life safety systems, are complete and fully operational and are ready for occupancy, the Contractor has submitted the Contractor's punch list with respect to such items and they have been inspected and approved by the Engineer and Owner as to scope, number, and content;

3. All warranties required by the Contract Documents have been delivered to Owner;

4. All equipment manuals and operational videos have been delivered to Owner and training by Contractor of Owner's staff is complete; and

5. The Owner has issued the Certificate of Substantial Completion, based on recommendation of Engineer concurrence that the required conditions has been satisfied.

B. When Contractor considers the entire Work ready for its intended use and all other requirements of Article 14.04A. have been satisfied, Contractor shall notify Owner and Engineer in writing that the entire Work is substantially complete (except for items specifically listed by Contractor as incomplete) and request that

Owner issue a certificate of Substantial Completion. The Owner may, at its sole discretion, accept portions of the Project separately, in which event the applicable parts of this Article 14.04A. shall apply to such portions of the Project;

C. Promptly after Contractor's notification, Owner, Contractor, and Engineer shall make an inspection of the Work to determine the status of completion. If Engineer does not consider the Work substantially complete, Engineer will notify Contractor in writing giving the reasons therefor.

D. If Engineer considers the Work substantially complete, Engineer will deliver to Owner a recommendation for approval of Substantial Completion. There shall be attached to the recommendation a list of items to be completed or corrected before final payment. Owner shall have seven days after receipt of the engineer's recommendation during which to make written objection to Engineer as to any provisions of the recommendation or attached list. If, after considering such objections, Engineer concludes that the Work is not substantially complete, Engineer will, within 14 days after submission of the their recommendation to Owner, notify Contractor in writing, stating the reasons therefor and revise the final punch list accordingly. Failure to include an item on such list does not alter the responsibility of the Contractor to complete all Work in accordance with the Contract Documents. Contractor must complete all punch list items to the satisfaction of the Owner prior to Final Payment.

E. At the time of delivery of the engineer's recommendation for Substantial Completion, Engineer will clarify to Owner and Contractor as to division of responsibilities pending final payment between Owner and Contractor with respect to security, operation, safety, and protection of the Work, maintenance, heat, utilities, insurance, and warranties and guarantees. Unless Owner and Contractor agree otherwise in writing and so inform Engineer, Engineer's aforesaid recommendation will be binding on Owner and Contractor until final payment.

F. Owner shall have the right to exclude Contractor from the Site after the date of Substantial Completion subject to allowing Contractor reasonable access to remove its property and complete or correct items on the tentative list.

G. Final Punch List. In accordance with Section 218.70, Florida Statutes, following Substantial Completion, the Owner, Contractor and Engineer shall work together to supplement and finalize a list of items required to be completed for final completion of the Project within the following time frames:

1. For construction projects having an estimated cost of less than $10 million, within 30 calendar days after reaching Substantial Completion of the Work; or

2. For construction projects having an estimated cost of $10 million or more, within 30 calendar days, or, if extended by contract, up to 60 calendar days after reaching Substantial Completion of the Work.

Within five days after the punch list has been developed, Contractor shall deliver a copy of the list to Owner and Engineer. The failure to include any corrective work or pending items not yet completed on the final punch list or any punch list does not alter the responsibility of the Contractor to complete all of the Work in accordance with the Contract Documents. Contractor shall complete the final punch list items within the time periods specified above. Upon completion of all items on the final punch list, the Contractor may submit a payment request for all remaining retainage withheld by the Owner. If a good faith dispute exists as to whether one or more items identified on the list have been completed pursuant to the Contract, the Owner may continue to withhold up to 150 percent of the total costs to complete such items.

14.05 Partial Utilization

A. Prior to Substantial Completion of all the Work, Owner may use or occupy any substantially completed part of the Work which has specifically been identified in the Contract Documents, or which Owner, Engineer, and Contractor agree constitutes a separately functioning and usable part of the Work that can be used by Owner for its intended purpose without significant interference with Contractor's performance of

the remainder of the Work, subject to the following conditions:

1. Owner at any time may request Contractor in writing to permit Owner to use or occupy any such part of the Work which Owner believes to be ready for its intended use and substantially complete. If and when Contractor agrees that such part of the Work is substantially complete, Contractor, Owner, and Engineer will follow the procedures of Paragraph 14.04.for that part of the Work.

2. With Owner's approval, Contractor at any time may notify Owner and Engineer in writing that Contractor considers any such part of the Work ready for its intended use and substantially complete and request Ownerto issue a certificate of Substantial Completion for that part of the Work. However, in no event shall Owner or Engineer be obligated to deem a portion of the Work substantially complete or otherwise partially accept the Work. Owner may seek partial occupancy or use whether or not the portion is substantially complete, provided the Owner and Contractor have accepted in writing the responsibilities assigned to each of them for payments, retainage, if any, security, maintenance, heat, utilities, damage to the Work and insurance, and have agreed in writing concerning the period for completion or correction of the Work and commencement of warranties required by the Contract Documents.

3. Within a reasonable time after either such request, Owner, Contractor, and Engineer shall make an inspection of that part of the Work to determine its status of completion. If Engineer does not consider that part of the Work to be substantially complete, Engineer will notify Owner and Contractor in writing giving the reasons therefor. If Engineer considers that part of the Work to be substantially complete, the provisions of Paragraph 14.04 will apply with respect to certification of Substantial Completion of that part of the Work and the division of responsibility in respect thereof and access thereto.

4. No use or occupancy or separate operation of part of the Work may occur prior to compliance with the requirements of Paragraph 5.08 regarding property insurance.

14.06 Final Inspection

A. Upon written notice from Contractor that the entire Work or an agreed portion thereof is complete, Engineer will promptly make a final inspection with Owner and Contractor and will notify Contractor in writing of all particulars in which this inspection reveals that the Work is incomplete or defective. Contractor shall immediately take such measures as are necessary to complete such Work or remedy such deficiencies.

14.07 Final Payment

A. *Application for Payment:*

1. After Contractor has, in the opinion of Engineer, satisfactorily completed all corrections identified in the final punch list and during the final inspection has delivered, in accordance with the Contract Documents, all maintenance and operating instructions not previously delivered , schedules, guarantees, bonds, certificates or other evidence of insurance, certificates of inspection, marked-up record documents (as provided in Paragraph 6.12), and other documents, Contractor may make application for final payment following the procedure for progress payments.

2. The final Application for Payment shall be accompanied (except as previously delivered) by:

   a. all documentation called for in the Contract Documents, including but not limited to the evidence of insurance required by Paragraph 5.04.B.6;

   b. consent of the surety, if any, to final payment;

   c. a list of all Claims against Owner that Contractor believes are unsettled;

d. complete and legally effective final releases or waivers (satisfactory to Owner) of all Lien rights arising out of or Liens filed in connection with the Work;

e. an affidavit that payrolls, bills for materials and equipment, and other indebtedness connected with the Work for which the Owner or the Owner's property might be responsible or encumbered (less amounts withheld by Owner) have been paid or otherwise satisfied;

f. the final certificate of occupancy and all final governmental and utility authority permits have been issued;

g. Contractor has delivered to Owner all previously undelivered manufacturer and Subcontractor guarantees and warranties, and/or instruction manuals for appliances and equipment;

h. Contractor has delivered to Owner and Engineer all shop drawings, revised plans and final, complete and coordinated "as built" drawings in CAD and hard copy for the Work [including, without limitation, structural drawings, mechanical drawings (e.g., plumbing, air conditioning, fire sprinkler, etc.) and electrical drawings] detailing all changes or deviations from the original design;

i. Contractor has fully cleaned and restored the Site with respect to all of the final punch list work;

j. all temporary utilities are disconnected; and

k. Contractor has complied with all other requirements of the Contract Documents and all requirements of Owner.

3. If any Subcontractor or Supplier fails to furnish such a release or receipt in full, Contractor may furnish a bond or other collateral satisfactory to Owner to indemnify Owner against any Lien.

B. *Engineer's Review of Application and Acceptance:*

1. If, on the basis of Engineer's observation of the Work during construction and final inspection, and Engineer's review of the final Application for Payment and accompanying documentation as required by the Contract Documents, Engineer is satisfied that the Work has been completed and Contractor's other obligations under the Contract Documents have been fulfilled, Engineer will, within ten days after receipt of the final Application for Payment, indicate in writing Engineer's recommendation of payment and present the Application for Payment to Owner for payment. At the same time Engineer will also give written notice to Owner and Contractor that the Work is acceptable subject to the provisions of Paragraph 14.09. Otherwise, Engineer will return the Application for Payment to Contractor, indicating in writing the reasons for refusing to recommend final payment, in which case Contractor shall make the necessary corrections and resubmit the Application for Payment.

2. Owner may withhold final payment to such extent as may be necessary on account of:

a. Defective Work not remedied;

b. Claims filed or reasonable evidence indicating probable filing of claims by other parties a against Contractor;

c. Failure of Contractor to make payments properly to Subcontractors or suppliers or for material or labor;

d. Damage to another contractor, subcontractor, supplier, materialmen, party, or person not remedied;

e. Liquidated damages;

f. As-built drawings not being in current and acceptable state; and/or

g. Any other breach of this Agreement by Contractor.

3. When the above grounds are removed or resolved or Contractor provides a surety bond or a consent of surety satisfactory to Owner, which will protect Owner in the amount withheld, payment may be made in whole or in part, as applicable.

C. *Payment Becomes Due:*

1. Thirty days after the presentation to Owner of the Application for Payment and accompanying documentation, the amount recommended by Engineer, less any sum Owner is entitled to set off against Engineer's recommendation, including but not limited to liquidated damages, will become due and will be paid by Owner to Contractor.

14.08 Final Completion Delayed

A. If, through no fault of Contractor, final completion of the Work is significantly delayed, and if Engineer so confirms, Owner shall, upon receipt of Contractor's final Application for Payment (for Work fully completed and accepted) and recommendation of Engineer, and without terminating the Contract, make payment of the balance due for that portion of the Work fully completed and accepted. If the remaining balance to be held by Owner for Work not fully completed or corrected is less than the retainage stipulated in the Agreement, and if bonds have been furnished as required in Paragraph 5.01, the written consent of the surety to the payment of the balance due for that portion of the Work fully completed and accepted shall be submitted by Contractor to Engineer with the Application for such payment. Such payment shall be made under the terms and conditions governing final payment, except that it shall not constitute a waiver of Claims.

14.09 Waiver of Claims

A. The making of any payment, including final payment, shall not constitute a waiver of claims by the Owner or a waiver of any of Contractor's continuing obligations.

B. Acceptance of final payment by the Contractor, a subcontractor or material supplier shall constitute a waiver of claims by that payee except those previously made in writing and identified by that payee as unsettled at the time of final Application for Payment.

## ARTICLE 15 – SUSPENSION OF WORK AND TERMINATION

15.01 Owner May Suspend Work

A. At any time and without cause, Owner may suspend the Work or any portion thereof for a period of not more than 90 consecutive days by notice in writing to Contractor and Engineer. Contractor shall resume the Work Upon written notification from Owner. Contractor shall be granted an adjustment in the Contract Price or an extension of the Contract Times, or both, directly attributable to any such suspension if Contractor makes a Claim therefor as provided in Paragraph 10.05.

15.02 Owner May Terminate for Cause

A. The occurrence of any one or more of the following events will justify termination for cause:

1. Contractor's failure to perform the Work in accordance with the Contract Documents (including, but not limited to, failure to supply sufficient skilled workers or suitable materials or equipment or failure to adhere to the Progress Schedule established under Paragraph 2.07 as adjusted from time to time pursuant to Paragraph 6.04);

2. Contractor's disregard of or failure to comply with Laws or Regulations of any public body having jurisdiction or the authority of the Engineer;

3. Contractor's failure to make payment to Subcontractors for services, materials or labor in accordance with the respective agreements;

4. Contractor is otherwise guilty of a material breach of a provision of the Contract Documents;

5. Contractor shall institute proceedings or consent to proceedings requesting relief or arrangement under the Federal Bankruptcy Act or any similar or applicable federal or state law, or if a petition under any federal or state bankruptcy or insolvency law is filed against the Contractor and such petition is not dismissed within sixty (60) days from the date of said filing;

6. Contractor admits in writing his inability to pay his debts generally as they become due, or if the Contractor makes a general assignment for the benefit of his creditors, or if a receiver, liquidator, trustee or assignee is appointed on account of his bankruptcy or insolvency; and

7. Contractor submits an Application for Payment, sworn statement, waiver of claim, affidavit or document of any nature whatsoever which is intentionally falsified.

B. If one or more of the events identified in Paragraph 15.02.A occur, Owner may, after giving Contractor (and surety) seven days written notice of its intent to terminate the services of Contractor:

1. exclude Contractor from the Site, and take possession of the Work and of all Contractor's tools, appliances, construction equipment, and machinery at the Site, and use the same to the full extent they could be used by Contractor (without liability to Contractor for trespass or conversion);

2. incorporate in the Work all materials and equipment stored at the Site or for which Owner has paid Contractor but which are stored elsewhere; and

3. complete the Work as Owner may deem expedient.

C. If Owner proceeds as provided in Paragraph 15.02.B, Contractor shall not be entitled to receive any further payment until the Work is completed. If the unpaid balance of the Contract Price exceeds all claims, costs, losses, and damages (including but not limited to all fees and charges of engineers, architects, attorneys, and other professionals and all court or arbitration or other dispute resolution costs) sustained by Owner arising out of or relating to completing the Work, such excess will be paid to Contractor. If such claims, costs, losses, and damages exceed such unpaid balance, Contractor and its surety shall pay the difference to Owner. Such claims, costs, losses, and damages incurred by Owner will be reviewed by Engineer as to their reasonableness and, when so approved by Engineer, incorporated in a Change Order. When exercising any rights or remedies under this Paragraph, Owner shall not be required to obtain the lowest price for the Work performed.

D. Notwithstanding Paragraphs 15.02.B and 15.02.C, Owner, in its sole discretion, may choose not to terminate Contractor's services if Contractor begins within seven days of receipt of notice of intent to terminate to correct its failure to perform and proceeds diligently to cure such failure within no more than 15 days of receipt of said notice.

E. Where Contractor's services have been so terminated by Owner, the termination will not affect any rights or remedies of Owner against Contractor then existing or which may thereafter accrue. Any retention or payment of moneys due Contractor by Owner will not release Contractor from liability.

F. If and to the extent that Contractor has provided a performance bond, that bond shall incorporate the provisions of this Agreement.

15.03 Owner May Terminate For Convenience

A. The Owner may terminate this contract for convenience upon providing Contractor fourteen (14) days written notice of the same. If this Contract is terminated as provided herein, the Contractor shall be paid for all completed and acceptable Work executed and allowable and proven demobilization expenses incurred due to such termination. Payment shall include services actually performed in full prior to termination date, but shall exclude all lost profits, direct, indirect, consequential, special damages, or other damages for the remainder of the Project.

If a court of competent jurisdiction finds that the Owner wrongfully terminated this Contract, then in such event, this Contract shall be deemed terminated for convenience as provided for in this Paragraph 15.03A., and the Contractor shall not be entitled to damages or loss of profits, consequential, indirect, or special damages, but may be entitled to all items as authorized herein.

15.04 Contractor May Stop Work or Terminate

A. If, through no act or fault of Contractor, (i) the Work is suspended for more than 90 consecutive days by Owner or under an order of court or other public authority, or (ii) Engineer fails to act on any Application for Payment within 30 days after it is submitted, or (iii) Owner fails for 30 days to pay Contractor any sum finally determined to be due, then Contractor may, upon fourteen (14) days written notice to Owner and Engineer, and provided Owner or Engineer do not remedy such suspension or failure within that time, terminate the Contract and recover from Owner for call completed and acceptable Work executed and allowable and proven demobilization expenses as a result of such termination, but in no event shall Contractor be entitled to any lost profits, overhead, direct, indirect, consequential special damages or other damages for the remainder of the Project.

B. In lieu of terminating the Contract and without prejudice to any other right or remedy, if Engineer has failed to act on an Application for Payment within 30 days after it is submitted, or Owner has failed for 30 days to pay Contractor any sum finally determined to be due, Contractor may, seven days after written notice to Owner and Engineer, stop the Work until payment is made of all such amounts due Contractor, including interest thereon. The provisions of this Paragraph 15.04 are not intended to preclude Contractor from making a Claim under Paragraph 10.05 for an adjustment in Contract Price or Contract Times or otherwise for expenses or damage directly attributable to Contractor's stopping the Work as permitted by this Paragraph.

## ARTICLE 16 –

16.01 [This paragraph intentionally left blank].

## ARTICLE 17 – MISCELLANEOUS

17.01 Giving Notice

A. Whenever any provision of the Contract Documents requires the giving of written notice, it will be deemed to have been validly given if:

1. delivered in person to the individual or to a member of the firm or to an officer of the corporation

for whom it is intended; or

2. delivered at or sent by registered or certified mail, postage prepaid, Federal Express or other similar carrier with signature required to the last business address known to the giver of the notice.

17.02 Computation of Times

A. When any period of time is referred to in the Contract Documents by days, it will be computed to exclude the first and include the last day of such period. If the last day of any such period falls on a Saturday or Sunday or on a day made a legal holiday by the law of the applicable jurisdiction, such day will be omitted from the computation.

17.03 Cumulative Remedies

A. The duties and obligations imposed by these General Conditions and the rights and remedies available hereunder to the parties hereto are in addition to, and are not to be construed in any way as a limitation of, any rights and remedies available to any or all of them which are otherwise imposed or available by Laws or Regulations, by special warranty or guarantee, or by other provisions of the Contract Documents. The provisions of this Paragraph will be as effective as if repeated specifically in the Contract Documents in connection with each particular duty, obligation, right, and remedy to which they apply.

17.04 Survival of Obligations

A. All representations, indemnifications, warranties, and guarantees made in, required by Contractor, or given in accordance with the Contract Documents, as well as all continuing obligations indicated in the Contract Documents, will survive final payment, completion, and acceptance of the Work or termination or completion of the Contract or termination of the services of Contractor.

17.05 Controlling Law

A. This Contract is to be governed by the law of the State of Florida. Any legal proceeding arising from the Contract Documents shall be brought only in a court of competent jurisdiction in Palm Beach County, Florida.

17.06 Headings

A. Article and paragraph headings are inserted for convenience only and do not constitute parts of these General Conditions.

END OF SECTION

**EXHIBIT "B'**
**SIGNING AUTHORITY**





# Detail by FEI/EIN Number

Florida Profit Corporation
ALL WEBBS ENTERPRISES, INC.

**Filing Information**

| | |
|---|---|
| **Document Number** | G53896 |
| **FEI/EIN Number** | 59-2418764 |
| **Date Filed** | 08/11/1983 |
| **State** | FL |
| **Status** | ACTIVE |

**Principal Address**

309 COMMERCE WAY
JUPITER, FL 33458

Changed: 03/11/1988

**Mailing Address**

309 COMMERCE WAY
JUPITER, FL 33458

Changed: 03/11/1988

**Registered Agent Name & Address**

WEBB, DAVID W.
902 DOLPHIN DRIVE
JUPITER, FL 33458

Name Changed: 06/29/1984

Address Changed: 02/07/1991

**Officer/Director Detail**

**Name & Address**

Title P

WEBB, DAVID W.
902 DOLPHIN DRIVE
JUPITER, FL 33458

Title ST

WEBB. DEBORAH C.

902 DOLPHIN DRIVE
JUPITER, FL 33458

Title VP

WEBB, DAVID W. JR
2961 E. COMMUNITY DRIVE
JUPITER, FL 33458

**Annual Reports**

| Report Year | Filed Date |
|---|---|
| 2018 | 01/15/2018 |
| 2019 | 03/04/2019 |
| 2020 | 01/26/2020 |

**Document Images**

| | |
|---|---|
| 01/26/2020 -- ANNUAL REPORT | View image in PDF format |
| 03/04/2019 -- ANNUAL REPORT | View image in PDF format |
| 01/15/2018 -- ANNUAL REPORT | View image in PDF format |
| 03/09/2017 -- ANNUAL REPORT | View image in PDF format |
| 03/28/2016 -- ANNUAL REPORT | View image in PDF format |
| 03/19/2015 -- ANNUAL REPORT | View image in PDF format |
| 02/28/2014 -- ANNUAL REPORT | View image in PDF format |
| 01/24/2013 -- ANNUAL REPORT | View image in PDF format |
| 04/06/2012 -- ANNUAL REPORT | View image in PDF format |
| 01/06/2011 -- ANNUAL REPORT | View image in PDF format |
| 02/16/2010 -- ANNUAL REPORT | View image in PDF format |
| 04/16/2009 -- ANNUAL REPORT | View image in PDF format |
| 01/25/2008 -- ANNUAL REPORT | View image in PDF format |
| 01/03/2007 -- ANNUAL REPORT | View image in PDF format |
| 01/05/2006 -- ANNUAL REPORT | View image in PDF format |
| 01/10/2005 -- ANNUAL REPORT | View image in PDF format |
| 03/08/2004 -- ANNUAL REPORT | View image in PDF format |
| 02/18/2003 -- ANNUAL REPORT | View image in PDF format |
| 01/24/2002 -- ANNUAL REPORT | View image in PDF format |
| 01/19/2001 -- ANNUAL REPORT | View image in PDF format |
| 03/24/2000 -- ANNUAL REPORT | View image in PDF format |
| 05/06/1999 -- ANNUAL REPORT | View image in PDF format |
| 04/08/1998 -- ANNUAL REPORT | View image in PDF format |
| 04/09/1997 -- ANNUAL REPORT | View image in PDF format |
| 02/07/1996 -- ANNUAL REPORT | View image in PDF format |
| 01/20/1995 -- ANNUAL REPORT | View image in PDF format |

# TECHNICAL SPECIFICATIONS
## *FINAL DESIGN*

## SURFICIAL AQUIFER PRODUCTION WELL

## WELL REHABILITATION, WELL MAINTENANCE, AND WELL CONSTRUCTION PROJECT

Prepared by:

JLA Geosciences, Inc.
1907 Commerce Lane, Suite 104
Jupiter, Florida 33458

08.05.2020

(This page intentionally left blank.)

# VILLAGE OF WELLINGTON
# SURFICIAL AQUIFER PRODUCTION WELL
# REHABILITATION AND MAINTENANCE PROJECT

## TABLE OF CONTENTS


### DIVISION 00 – Procurement and Contracting Requirements

(To Be Provided by Owner)

### DIVISION 01 – General Requirements

| | |
|---|---|
| Summary of Work | 01 11 00 |
| Measurement and Payment | 01 29 00 |
| Project Coordination | 01 31 13 |
| Construction Progress Schedule | 01 32 16 |
| Submittals | 01 33 00 |
| Construction Facilities and Temporary Control | 01 52 00 |
| Traffic Controls | 01 55 26 |

### DIVISION 32 – Exterior Improvements

| | |
|---|---|
| Sodding | 32 93 00 |

### DIVISION 33 – Utilities

| | |
|---|---|
| Well Drilling | 33 21 20 |
| Well Casing | 33 21 21 |
| Annular Grout | 33 21 22 |
| Well Screen and Gravel Pack | 33 21 23 |
| Borehole Geophysical and Video Logging | 33 21 24 |
| Well Development | 33 21 25 |
| Pumping Tests | 33 21 26 |
| Test Well Interval Sampling | 33 21 26.10 |
| Formation Water Disposal System | 33 21 27 |
| Production Well Acidization | 33 21 28 |
| Well Facility Disinfection | 33 21 29 |
| Temporary Wellhead | 33 21 32 |
| Well Abandonment | 33 29 00 |

### ATTACHMENT 1 – EXISTING WELL CONSTRUCTION DETAILS

### ATTACHMENT 2 – EXISTING AND PROPOSED WELL LOCATION MAPS

## TABLE OF CONTENTS

(This page intentionally left blank.)

## SECTION 01 11 00

## SUMMARY OF WORK

## PART I GENERAL

### 1.01 WORK COVERED BY CONTRACT DOCUMENTS

### 1.0 GENERAL SCOPE

The work described in these Specifications is for the rehabilitation, maintenance, and new well construction for the Village of Wellington (OWNER) Surficial Aquifer System wellfield, located in Wellington, Florida. The OWNER may elect to rehabilitate or perform maintenance for some or all of the wells, as well as construct new wells, as the OWNER sees fit. The OWNER will determine the scope of work and the order in which that scope is to take place. No work is guaranteed under this Contract and any generated scope shall be subject to approval by the Village of Wellington Council individually. The well location maps and a construction details table are provided as Exhibits at the end of these specifications. The CONTRACTOR shall perform all work in accordance with specification sections provided in the contract documents. Examples of typical work scopes for these wells are described below. The actual work scope will vary; this is only provided to give insight as to the nature of the work.

- Remove wellhead and pump assembly, perform preliminary downhole video remove existing screen and riser, install new screen and riser, install new gravel pack, develop well, perform post rehabilitation video, replace wellhead and pump assembly, disinfect well, bacteriological testing, demobilize, restore site.

- Remove wellhead and pump assembly, perform preliminary downhole video, brush existing screen and riser, install new gravel pack, develop well, perform post rehabilitation video, replace wellhead and pump assembly, disinfect well, bacteriological testing, demobilize, restore site.

- Remove wellhead and pump assembly, perform preliminary downhole video, perform acid treatment of existing screen and riser, install new gravel pack, develop well, perform post rehabilitation video, replace wellhead and pump assembly, disinfect well, bacteriological testing, demobilize, restore site.

- Remove wellhead and pump assembly and abandon well, restore site.

In performing the scope of work, the CONTRACTOR shall furnish all labor,

materials, transportation, tools, supplies, equipment and necessary appurtenances to rehabilitate the production wells to the satisfaction of the OWNER as specified herein.

## 2.0 EQUIPMENT AND PERSONEL

The CONTRACTOR shall furnish capable personnel and equipment required to handle the materials and perform the tasks specified herein. The OWNER or its Representative shall reserve the right to inspect the equipment of the drilling CONTRACTORs to assure qualification. The awarded CONTRACTOR shall repair or replace any equipment not considered by the OWNER or it's Representative to be satisfactory. At the OWNER's discretion, the CONTRACTOR shall demonstrate the accuracy and precision of the CONTRACTOR's methods of measurement.

The CONTRACTOR shall provide and mobilize a minimum of two (2) clean water storage tanks, having minimum capacities of 500-gallons and 2000-gallons, for the CONTRACTOR's use onsite. The tank shall be acceptable to the OWNER and be used for storage of water, mixing chlorine, surfactant and acid prior to installation of mixtures into the well.

## 3.0 SITE CONDITIONS

Each well site is located in an area with adequate access. The CONTRACTOR is assumed to have viewed the well sites before submitting a bid. CONTRACTOR shall remove external piping, fittings, valves, wellhead assembly, pump column, and pump and secure exposed wiring from harm during site activities. If required, a fence CONTRACTOR shall do fence removal and replacement. If required, the CONTRACTOR shall restore sod and plantings. Other existing improvements at each site shall be removed, as needed, with prior approval by the OWNER. During the period of the contract, the CONTRACTOR will protect all well appurtenances removed by the CONTRACTOR; protect all remaining improvements; and protect any equipment loaned to the CONTRACTOR.

The CONTRACTOR will advise the OWNER of any device or appurtenances known by the CONTRACTOR to be broken or unstable upon discovery. The CONTRACTOR shall replace, at the CONTRACTOR's expense, items that are broken or rendered unusable as a result of actions by the CONTRACTOR.

## 4.0 DESCRIPTION OF PRODUCTION WELLS

The existing well construction details are provided in Attachment 1 of the Appendix of these specifications.

## 5.0 SPECIFIC WELL REHABILITATION WORK TASKS

Well rehabilitation may include the following work tasks or any combination thereof:

A. *Mobilization (major or minor)*: Included in this task is the transport of all necessary drilling equipment, pumps, motors, surge tanks and other ancillary equipment on site, including restroom facilities for CONTRACTOR'S use, removal of fencing, landscaping, grubbing and preparation of the site for set-up of the rig and all necessary equipment and set-up of all necessary drilling and/or rehabilitation equipment to perform the well rehabilitation, including erosion prevention measures, drainage Best Management Practices, and sedimentation collection measures. All associated permitting requirements to transport and set-up the drilling equipment are also included in this task. Determination of mobilization type (major/minor) is outlined by task per the table provided in this section.

During all rehabilitation work, the CONTRACTOR shall secure any well within his/her scope of work and prevent unauthorized access at all times in accordance with Section 33 21 32. When the CONTRACTOR is off site, the wellhead shall be sealed and watertight. Temporary wellhead seals shall be bolted in place and inaccessible to unauthorized entry into the well.

B. *Removal and installation of pump:* CONTRACTOR shall remove external piping, fittings, valves, wellhead assembly, pump column, and pump and secure exposed wiring from harm during site activities.

Following the well rehabilitation, the CONTRACTOR shall re-install any of the equipment previously removed unless approval not to do so is given in writing by the OWNER or the ENGINEER. The removed pump may be stored on site up to one (1) week during the out-of-service period. If the duration of the out-of-service period is greater than one (1) week, then the pump is to be transported by the CONTRACTOR to the OWNER water plant for storage. The CONTRACTOR shall protect OWNER property in accordance with Section 10.0 Protection of Property within this specification. Installation of pump/motor item may also include installation of OWNER furnished pump and motor.

C. *Pump retrieval:* CONTRACTOR shall perform retrieve of pump/motor assembly as directed by the ENGINEER.

D. *Video logging:* CONTRACTOR shall perform static and dynamic, 360-degree, color, video logging of the entire well in accordance with Section 33 21 24.

E. *Acid treatment:* The CONTRACTOR is responsible for all potential receptors that may be impacted by the acid treatment activity and will use best management practices in keeping all receptors free from harm. Prior to acidization Contractor will provide plan for acidization including wellhead set up for approval by ENGINEER. The CONTRACTOR shall set up and acidize the well screen in accordance with Section 33 21 28.

F. *Brushing and swabbing:* The CONTRACTOR shall perform swabbing of the existing well casing. Maximum swabbing diameter shall be no more than ½ inch less the I.D. of the existing well casing as determined in the field. Swabbing tool dimensions shall be submitted to the ENGINEER in accordance with Section 01 33 00.

G. *Fill and compaction of site voids:* The CONTRACTOR shall perform fill and compaction of well site voids as necessary and determined by the ENGINEER. Site compaction shall include areas surrounding the immediate well site to stabilize the surface feature.

H. *Profile well:* Drill a nominal 6-inch diameter pilot hole to a depth of approximately 180 feet below land surface using the mud rotary method. The pilot hole will be drilled on the centerline of the production well as shown on the project drawings and as approved by the ENGINEER. Formation samples shall be collected by the CONTRACTOR every 5 feet, at a minimum, or as otherwise specified by the ENGINEER. Prepare the pilot hole for geophysical logging by circulation of the drilling fluids until uniform and free of drill cuttings. A geophysical logging suite shall be conducted by the CONTRACTOR and shall include Dual Induction log; Natural gamma log; Spontaneous potential log; Caliper log; Fluid Resistivity log. The CONTRACTOR may set a temporary surface casing to facilitate drilling the pilot hole. The CONTRACTOR will determine the setting depth of the temporary surface casing. Following completion of geophysical logging, the CONTRACTOR shall install a continuous casing string of approximately 180 feet of 2-inch diameter casing and 10 feet of 0.020-inch slot well screen. CONTRACTOR will then install gravel pack in the annular space between the casing, screen and the borehole. Gravel shall be placed using only the tremie method from the base of the well screen to land surface. Gravel will be added as needed to support the casing and fill the borehole as it is pulled to shallower depths. Develop the well using airlift method until turbidity is lowered to an acceptable level for collecting a water sample as

determined by the ENGINEER. The CONTRACTOR shall provide a test/sampling pump to allow for representative water samples to be collected by the ENGINEER and OWNER. Upon completion of development and sampling, raise casing and screen to a depth directed by ENGINEER. Develop and sample as described above. This procedure will be repeated up to 5 times, as determined by the ENGINEER. Upon completion of the test well sampling, CONTRACTOR shall remove the test well and plug and abandon the borehole in accordance with applicable regulations project drawings.

I. *Development (Including airlift, jetting with simultaneous airlift, and pump development):* The CONTRACTOR will provide all pumps, motors, air compressors, surge tanks and other ancillary equipment needed to develop each screened well to the extent that, as practical, suspended solids have been removed from the well bore, screen and gravel pack, in accordance with Section 33 21 25.

J. *New Well Construction*

a. *30-inch surface casing installation.* Drill, furnish, install, and cement in place approximately 30 feet of 30-inch outside diameter, steel surface casing having a minimum wall thickness of 0.375 inches. Welded casings shall be straight and true of alignment to the satisfaction of the ENGINEER. Casings shall have machine-cut beveled ends and shall be arc welded together by the standards of the American Welding Society. Installation and grouting shall be in accordance with Section 33 21 21 and Section 33 21 22.

b. *Drilling for 24-inch casing installation.* Drill a nominal 28-inch diameter borehole using the mud rotary method. A staged bit shall be used that includes a lead bit placed below the reaming bit assembly. Prepare the borehole for casing installation by circulating the drilling fluid until all drill cuttings have been removed. Drilling shall be performed in accordance with Section 33 21 20.

c. *Furnish, install and grout 24-inch casing.* Furnish and install a continuous casing string of 24-inch diameter (O.D.), Schedule 40 PVC casing. Casing construction, assembly and installation shall be in accordance with Section 33 21 21. Grout the annular space between the 24-inch diameter PVC casing and the borehole and 36-inch diameter surface casing with neat cement in accordance with Section 33 21 22. Allow grout to cure for a minimum 48 hours before resuming drilling operations.

d. *Drill screened interval:* Drill a nominal 22-inch diameter borehole using the method as specified in Section 33 21 20.

The depth of the borehole shall be measured from the base of the 24-inch diameter PVC casing and to a depth determined by the ENGINEER. 12.0 Reverse air drilling will be performed in accordance with Section 33 21 20.

e. *Install within well, new well screen and riser:* The CONTRACTOR will supply and install the specified amount of stainless-steel well screen. Furnish and install 16-inch diameter, 316 stainless steel continuous slot well screen and 16-inch diameter, CertainTeed CertaLok SDR26 PVC riser casing. The riser casing/well screen lengths are outlined in the table above in Part III Execution, 3.02 Construction Scope of Work. The top of the screen shall be fitted to 16-inch diameter, CertainTeed CertaLok SDR26 PVC riser casing which shall be continuous up to land surface. Screen and riser casing construction, assembly and installation will be in accordance with Sections 33 21 21 and 33 21 23.

K. *Overdrill Well:*

a. *Remove existing well screen.* The existing well screen, gravel pack and riser will be completely removed by the CONTRACTOR.

b. *Overdrill existing outer casing.* Remove the existing outer casing by the overdrill method. The CONTRACTOR may submit a plan for an alternative method for removal of the existing casing for review and approval by the ENGINEER. To the furthest extent possible, the CONTRACTOR shall preserve the integrity of the existing borehole by avoiding drilling/reaming of the existing completion interval and by avoiding the use of and/or introduction of bentonite drilling fluids (mud) or drilling fluid additives to the existing completion interval.

c. *Furnish, install and grout 24-inch casing.* Furnish and install a continuous casing string of 24-inch diameter (O.D.), Schedule 40 PVC casing. Casing construction, assembly and installation shall be in accordance with Section 33 21 21. Grout the annular space between the 24-inch diameter PVC casing and the borehole and 36-inch diameter surface casing with neat cement in accordance with Section 33 21 22. Allow grout to cure for a minimum 48 hours before resuming drilling operations.

d. *Clean-out open hole:* The CONTRACTOR shall clean-out the open borehole from the base of the outer casing to the total well depth to satisfaction of the ENGINEER. This is to include all necessary equipment, materials and labor needed to complete the work in accordance with Section 33 21 20.

Reverse air drilling will be performed in accordance with Section 33 21 20.

e. *Install within overdrilled well, new well screen and riser:* The CONTRACTOR will supply and install the specified amount of stainless-steel well screen. Furnish and install 16-inch diameter, 316 stainless steel continuous slot well screen and 16-inch diameter, CertainTeed CertaLok SDR26 PVC riser casing. The riser casing/well screen lengths are outlined in the table above in Part III Execution, 3.02 Construction Scope of Work. The top of the screen shall be fitted to 16-inch diameter, CertainTeed CertaLok SDR26 PVC riser casing which shall be continuous up to land surface. Screen and riser casing construction, assembly and installation will be in accordance with Sections 33 21 21 and 33 21 23.

L. *Screen replacement:*

a. *Remove screen and riser:* The existing well screen, gravel pack and riser will be completely removed by the CONTRACTOR. The existing outer casings shall remain in place and undamaged.

b. *Clean-out open hole:* The CONTRACTOR shall clean-out the open borehole from the base of the outer casing to the total well depth to satisfaction of the ENGINEER. This is to include all necessary equipment, materials and labor needed to complete the work in accordance with Section 33 21 20.

c. *Install new 12-inch diameter well screen and riser:* The CONTRACTOR will supply and install the specified amount of stainless-steel well screen. This work shall include, but not be limited to, stainless steel wire-wrapped screen, stainless steel blank sections of well screen, bail hook, all labor, materials and equipment necessary for proper screen installation. Well Screen shall be 12-inch diameter based on the well construction details of the existing well outer casing and determined by the ENGINEER and OWNER. Well screens shall be installed in accordance with Section 33 21 23.

M. *Geophysical logging:* CONTRACTOR shall perform geophysical logging of all drilled boreholes in accordance with Section 33 21 24.

N. *Squeeze Grouting of Existing Well Casing:* The CONTRACTOR shall perform squeeze grouting of the base of the existing well casing. Squeeze grouting shall be performed in accordance with Section 33 21 22.

O. *Install new well-screen and riser:* The CONTRACTOR will supply and install the specified amount of stainless-steel well screen. This work shall include, but not be limited to, stainless steel wire-wrapped screen, stainless steel blank sections of well screen, bail hook, all labor, materials and equipment necessary for proper screen installation. Well Screen may be 10-inch or 12-inch diameter based on the well construction details of the existing well outer casing and determined by the ENGINEER and OWNER. Well screens shall be installed in accordance with Section 33 21 23.

P. *Install gravel pack:* Gravel pack shall be installed in accordance with Section 33 21 23. Levels shall be measured continuously during development with the use of tremie tubing and replenished as needed. Replacement gravel material shall be as specified for each well by the ENGINEER. At completion of development, the gravel elevation shall remain at the level designated by the ENGINEER.

Q. *Well disinfection:* The CONTRACTOR shall disinfect each production well, pump facilities, wellhead, and added piping complete according to the requirements of AWWA C-601 and Section 33 21 29.

R. *Well abandonment:* The CONTRACTOR shall perform well abandonment in accordance with State of Florida well drilling practices and AWWA standards, including obtaining all required permits and performing all preliminary investigations for determination of existing well construction in accordance with Section 33 29 00.

S. *Site Restoration (major or minor)*: The CONTRACTOR shall perform the well site(s) to its original condition. Determination of restoration type (major/minor) is outlined by task per the table provided in this section.

## 6.0 SPECIFIC WELL REHABILITATION TASK TIME FRAMES

Well rehabilitation may include the work tasks provided in the table at the end of this Section, or any combination thereof. The time allocated for each task is also included in the table. The intent of the list of work tasks is to provide the CONTRACTOR insight into the type of work that may be required and the time in which it is expected to be completed. The task numbers listed in the table correspond to the items listed on the Bid Schedule of Values.

## 7.0 DISPOSAL OF WASTES

The CONTRACTOR shall provide containment for all fluids and solids associated with the work described in these specifications. The CONTRACTOR shall dispose of all spent wastes off site in an

environmentally responsible manner and in accordance with all implementing regulatory agencies. Water that meets criteria for discharge on site may be discharged on site. The CONTRACTOR shall minimize flooding to adjacent properties and roadways. If necessary, temporary berms will be constructed and/or piping shall be installed to divert all discharge water to an approved drainage structure. CONTRACTOR shall be responsible for implementing Best Management Practices (BMPs) for erosion and drainage protection.

## 8.0 SITE RESTORATION

Upon completion of the work, the CONTRACTOR shall replace pump, pump column, wellhead, piping, security fence, landscaping, irrigation, sod and all other appurtenances to restore each site to the satisfaction of the OWNER. CONTRACTOR is responsible for watering and establishing sod to healthy state within 30 days of placing sod. The OWNER will make all electrical connections. At the OWNER's discretion, the CONTRACTOR may make pump electrical terminations. Each well shall be left clean; free of oils, grease, or other substances used during rehabilitation. The CONTRACTOR shall remove from the site all removed deposits, existing well materials, debris, unused materials and chemicals and shall restore the site to its original or better condition acceptable to OWNER. Site restoration shall also include any restoration work to the water discharge outfalls, drainage ditches and canals.

## 9.0 REPORTING

On a daily basis, the CONTRACTOR shall provide verbal status reports and submit a copy of the daily log to the OWNER or the ENGINEER. A daily field log shall be maintained and updated on a daily basis. Include in the log the names of personnel on site, hours on site performing rehabilitation services and a detailed description of type of work performed, chemical, water and mud additives, quantities of additives to the well, development technique used, pumping rates, drawdown measurements, static water level measurements (measured at the beginning of each day), Rossum sand measurements, any problems, date and time for each entry. The log shall be kept current with a copy located at the drill site, and be available for inspection by the ENGINEER. Any pay application submitted with incomplete daily logs will be automatically rejected. The CONTRACTOR may copy the log for submittal at the OWNER water plant. The CONTRACTOR shall notify the OWNER immediately if unforeseen or unanticipated complications or conditions that occur during the performance of the scope of work.

## 10.0 PROTECTION OF PROPERTY

The CONTRACTOR shall take special precautions to reduce to a minimum the nuisances and damage to property which could result from working in a

residential area and adjacent to a road. Any damage to public or private property shall be immediately repaired or paid for by the CONTRACTOR at no expense to the OWNER. During the period of the contract, the CONTRACTOR will protect all well appurtenances removed by the CONTRACTOR; protect all remaining improvements; and protect any equipment loaned to the CONTRACTOR by the OWNER. If the CONTRACTOR becomes aware of any faulty or damaged OWNER equipment, he/she shall notify the OWNER immediately.

## 11.0 CERTIFICATION OF CHEMICALS

All chemicals used during project construction or furnished for project operation, whether herbicide, pesticide, disinfectant, polymer reactant or of other classification, must show approval of the Environmental Protection Agency (EPA), American Water Works Association (AWWA), US Department of Agriculture (USDA) and National Science Foundation (NSF). Use of all chemicals and disposal of residues shall be in strict conformance to applicable regulations, codes, laws, and ordinances.

## 12.0 PURCHASING OF PARTS/EQUIPMENT

The OWNER may request the CONTRACTOR to purchase parts and/or equipment for certain wells as needed. CONTRACTOR shall purchase and deliver equipment to the well site for the OWNER at cost in accordance with Article 12-Change of Contract Price, Change of Contract Time in the General Conditions. OWNER will require original vendor receipts for all items purchased. The OWNER may require that the CONTRACTOR provide up to three prices from different vendors. Any installation/modifications associated with equipment purchased if required will be paid for at the rate specified on the Bid Schedule of Values for Crew Foreman and one Crew Member (Item 28).

## 1.02 CONTRACT TIMEFRAME

**1.0** The CONTRACTOR shall mobilize to the site and be actively performing the scope of work required in these specifications within 30 calendar days upon authorization to proceed (NOTICE TO PROCEED) by the OWNER. The CONTRACTOR shall be diligent in completing the specified tasks and shall not discontinue work on the specified well, except during the material order period for the specified well. While the CONTRACTOR is performing the tasks authorized by the OWNER, the CONTRACTOR shall continue to perform the authorized tasks, during normal working hours, to completion. Normal working hours are defined as Monday through Friday, between 8:00 AM and 4:00 PM, excluding OWNER observed holidays and weekends. A list of OWNER holidays is available from upon request.

## 1.03 WORK BY OTHERS, COORDINATION

**1.0** The CONTRACTOR shall yield to operations at the water treatment plant at all times and not interfere in any way with operations or personnel. The CONTRACTOR shall comply and adhere to all security requirements including but not limited to background checks and issuance of security badges. Access to the well site and work areas shall be limited to the areas shown on the project drawings and as discussed in the pre-construction meeting(s).

**2.0** The CONTRACTOR shall coordinate with the OWNER regarding coordination of laydown areas and staging areas.

**3.0** The CONTRACTOR shall diligently perform the scope of work independently of all others who may perform concurrent tasks during execution of the scope of work.

**4.0** All CONTRACTOR equipment at individual well sites shall be contained within OWNER easements only. All work shall be in accordance with the existing easement agreements schedule limitations.

**5.0** Perimeter fencing must be secured at all times including but not limited to the installation of temporary construction fencing prior to the removal of existing perimeter and security fencing required for construction. CONTRACTOR must submit a plan outlining the installation and removal of fencing for approval by OWNER prior to mobilization.

**6.0** The OWNER's representative reserves the right to, throughout the construction process, perform onsite inspections of the CONTRACTOR and construction process. Documentation of work may include, but not be limited to, detailed documentation of daily work performed by the CONTRACTOR, and photographs and/or videos of critical phases of well construction, development, and testing.

**7.0** CONTRACTOR must contact the Palm Beach County Health Department and submit the "Well Construction Permit Application" if applicable, and any others required for construction, prior to commencement of well drilling activities. A minimum 30 calendar days will be built into the CONTRACTOR's schedule for Palm Beach County Health Department review period.

**8.0** The CONTRACTOR shall submit to the ENGINEER, plans to mitigate the construction noise and vibration impacts and comply with the noise and vibration criteria specified herein, including the method of construction and treatments if necessary.

## SURFICIAL AQUIFER PRODUCTION WELL REHABILITATION TASKS TIMETABLE

| Schedule of Values Task No. | Task | Contract Time to Complete Task (calendar days) | Mobilization Type | Restoration Type |
|---|---|---|---|---|
| 6 | Remove Pump/Motor | 2 | Minor | Minor |
| 7 | Re-install Pump/Motor | 2 | Minor | Minor |
| 8 | Pump/Motor Retrieval | 5 | Minor | Minor |
| 9/10 | Acid Treatment | 10 | Major | Major |
| 11 | Brushing and Swabbing | 7 | Major | Major |
| 12 | Fill and Compaction of Voids | 10 | Minor | Minor |
| 13 | Profile Well | 14 | Minor | Minor |
| 14, 15, 20, 21, 16, 22, 23, 26 | New well construction | 90 | Major | Major |
| 17, 19, 20, 21, 18, 22, 23, 26 | Overdrill well construction | 90 | Major | Major |
| 17, 18, 24, 25, 26 | Screen replacement | 60 | Major | Major |
| 26 | Install Gravel or Gravel Plug | 7 | Minor | Minor |
| 27 | Squeeze Grout | 7 | Major | Major |
| 28, 29 | Develop Well – Jetting/Airlift | 14 | Major | Major |
| 30 | Develop Well – Pump Development | 21 | Major | Major |
| 31 | Step-Drawdown Testing | 3 | Minor | Minor |
| 32 | Disinfect Well | 2 | Minor | Minor |
| 33 | Bacteriological Sampling and Clearance | 20 | Minor | Minor |
| 34 | Downhole Video | 1 | Minor | Minor |
| 35, 36 | Geophysical Logging | 1 | Minor | Minor |
| 37 | Formation Water Disposal System setup | 5 | Major | Major |
| 38 | Well Abandonment | 3 | Minor | Minor |
| 4 | Major Mobilization | 5 | -- | -- |
| 4 | Major Demobilization | 5 | -- | -- |
| 5 | Minor Mobilization | 1 | -- | -- |
| 5 | Minor Demobilization | 1 | -- | -- |
| 39 | Major Site Restoration | 5 | -- | -- |
| 40 | Minor Site Restoration | 1 | -- | -- |

*Does not include lead time to procure items; listed contract time is construction installation duration only.

**END OF SECTION**

## SECTION 01 29 00

## MEASUREMENT AND PAYMENT

## PART I GENERAL

### 1.01 GENERAL REQUIREMENTS

A. The unit prices stated in the Contract shall be considered payment in Full for the completion of all work. Payment shall be made under each item only for work as it is not specifically included under other items.

B. The CONTRACTOR shall furnish all labor, equipment and material required to complete the rehabilitation of Surficial wells for the Village of Wellington (OWNER).

C. The CONTRACTOR's attention is called to the fact that the quotations for the various items of Work are intended to establish a total price for completing the Work in its entirety. Should the CONTRACTOR feel that the cost of any item of Work has not been established by the Schedule of Values or Measure and Payment, he shall include the cost for that Work in the other Bid Items so that his proposal for the project does reflect his total price for completing the Work in its entirety.

D. CONTRACTOR applications for payment shall comply with OWNER contract terms and conditions.

E. A daily field log shall be maintained and updated on a daily basis. Any pay application submitted with incomplete daily logs will be automatically rejected.

## PART II PRODUCTS (NOT USED)

## PART III EXECUTION

### 3.01 REHABILITATION OF SURFICIAL AQUIFER WELLS

#### A. ITEM NO. 1 – BONDS AND INSURANCE

This pay item shall include the costs of required and acceptable bonds and insurance for the project in place for two years. Bonds and insurance shall be paid in full at the Line Item Lump Sum Price as specified in the Contract Documents, completed and accepted by the OWNER.

Payment for this item shall be made on the first Application for Payment. CONTRACTOR shall provide OWNER with Certificates of Insurance and Bonds during the CONTRACT execution process.

## B. ITEM NO. 2 – INDEMNIFICATION

One-time Indemnification payment will be made with the first Application for Payment for the Line Item Lump Sum Price as specified in the Contract Documents.

## C. ITEM NO. 3 – GENERAL CONDITIONS

The work specified in this item shall include the costs to comply with all elements of the General Conditions of the Contract, including but not limited to: record keeping, safety, permitting, project management and all other costs necessary to the job.

Payment shall be made at the Contract Lump Sum Price as specified in the Contract Documents. Measurement will be based on the percentage of work completed and accepted by OWNER and does not include the percentage of any stored materials.

## D. ITEM NO. 4 – MAJOR MOBILIZATION/DEMOBILIZATION

The work included in this Pay Item consists of preparatory work, finish work, mobilizing and demobilizing for beginning and ending work for major rehabilitation items as outlined by task in Section 01 11 00, including, but not limited to, those operations necessary for the movement of personnel, equipment, supplies and incidentals to and from the project site and for the establishment/de-establishment of the temporary provisions and state and local laws and regulations including pre-construction video, sanitary facilities and any other pre or post construction expense necessary for starting or completing the work. This item is limited to ten percent (5%) of the Contract Value (TOTAL BID).

Payment for this item shall be made at the Contract Unit Price for each well major mobilization following completion of mobilization to the well site and acceptance by the OWNER.

## E. ITEM NO. 5 – MINOR MOBILIZATION/DEMOBILIZATION

The work included in this Pay Item consists of preparatory work, finish work, mobilizing and demobilizing for beginning and ending work for minor rehabilitation items as outlined by task in Section 01 11 00, including, but not limited to, those operations necessary for the movement of personnel, equipment, supplies and incidentals to and from the project site and for the establishment/de-establishment of the temporary provisions and state and local laws and regulations including pre-construction video, sanitary facilities and any other pre or post construction expense necessary for starting or completing the work. This item is limited to ten percent (10%) of the Contract Value (TOTAL BID).

Payment for this item shall be made at the Contract Unit Price for each well minor mobilization following completion of mobilization to the well site and acceptance by the OWNER.

## F. ITEM NO. 6 – REMOVE PUMP/MOTOR AND DISCHARGE APPARATUS

This pay item shall include removal of well pump, wellhead piping assemblies, and electrical service and controls, and assessment of pulled equipment and proper disposal as specified in contract documents.

Payment for this item shall be made at the Contract Unit Price for Each complete pump removal as specified in the Contract Documents and witnessed and accepted by ENGINEER.

## G. ITEM NO. 7 – INSTALL PUMP/MOTOR AND DISCHARGE APPARATUS

This pay item shall include reinstall of existing well pump, wellhead piping assemblies, and electrical service and controls, and assessment of equipment as specified in contract documents or installation of OWNER furnished new well pump and motor and associated wellhead piping assemblies.

Payment for this item shall be made at the Contract Unit Price for Each complete pump installation as specified in the Contract Documents and witnessed and accepted by ENGINEER.

## H. ITEM NO. 8 – PUMP/MOTOR RETRIEVAL

This pay item shall include all materials, equipment, labor required to completely and successfully retrieved pump and motor assembly.

Payment for this item shall be made at the Contract Unit Price for Each successfully retrieved pump and motor assembly as specified in the Contract Documents and witnessed and accepted by ENGINEER.

## I. ITEM NO. 9 – WELL ACIDIZATION SETUP

This pay item consists of preparatory work, finish work, mobilizing and demobilizing for beginning and ending work, including, but not limited to, those operations necessary for well acidization including but not be limited to setup, provide acid pumping, labor and equipment necessary to acidize the well and to complete the acid treatment as specified in the Contract Documents accepted by the ENGINEER.

Payment will be made at the Contract Unit Price for Each well based upon the percentage of the work completed, and approved by the OWNER

## J. ITEM NO. 10 –WELL ACIDIZATION TREATMENT WITH 32% HCL

This pay item consists of 32% HCL acidization including but not be limited to furnishing and placing the acid as specified in the Contract Documents and accepted by the ENGINEER.

Payment shall be made at the Contract Unit Price per Gallon of 32% HCL Acid as specified in the Contract Documents and accepted by the ENGINEER as determined by delivery tickets and field observations, in accordance with Contract Documents.

## K. ITEM NO. 11 – BRUSHING AND SWABBING OF WELL SCREEN/RISER/CASING

This pay item shall include brushing of the full length of existing well screen, riser, or casing, including but not limited to all material, labor and equipment necessary to complete the work in accordance with the Contract Documents and accepted by the ENGINEER.

Payment shall be made at the Contract Unit Price for Each successful brushing of the entire well length as specified in the Contract Documents and accepted by the ENGINEER.

## L. ITEM NO. 12 – FILL AND COMPACTION OF SITE VOIDS

This pay item shall include fill and compaction of the well site of void areas, limited to areas within a 20 foot radius of the well site, including but not limited to all grading, material, compaction testing, labor and equipment necessary to complete the work in accordance with the Contract Documents and accepted by the ENGINEER.

Payment shall be made at the Contract Unit Price for Each successful fill and compacted well site as specified in the Contract Documents and accepted by the ENGINEER.

## M. ITEM NO. 13 – 6-INCH DIAMETER PROFILE WELL DRILLING, SAMPLING, ABANDONMENT

This pay item shall include the drilling of a nominal 6-inch diameter pilot hole to 160 feet below land surface at a location adjacent to the existing production well including geophysical logging, furnished and installed 2-inch diameter casing and well screen to 160 feet, development and water quality sampling at each depth interval, and proper plug and abandonment of the pilot hole as specified and in accordance with contract documents including but not be limited to all labor, equipment, grout, development time, proper disposal of drilling mud, and other materials necessary to properly perform test hole testing as described and specified in the Contract Documents and accepted by the ENGINEER.

Payment for this item shall be made at the Contract Unit Price for Each profile well as listed on the Contract Bid Proposal as specified in contract documents.

## N. ITEM NO. 14 – FURNISH, INSTALL AND GROUT IN PLACE 30-INCH DIAMETER STEEL SURFACE CASING TO 30 FEET

This pay item shall include the 30-inch outside diameter (O.D.) surface casing furnished, installed and grouted in place and shall include, but not be limited to, all labor, equipment, centralizers, annular grout and other materials necessary to properly install the casing as described and specified in the Contract Documents and accepted by the ENGINEER.

Payment shall be made at the Contract Unit Price per Linear Foot as specified in the Contract Documents and accepted by the ENGINEER.

## O. ITEM NO. 15 – DRILL NOMINAL 28-INCH DIAMETER BOREHOLE USING MUD ROTARY METHOD

This pay item includes the actual length of borehole drilled and accepted and shall be measured vertically from the bottom of the 30-inch diameter surface casing to the bottom of the nominal 28-inch diameter drilled hole interval. The borehole shall be paid for at the Contract Unit Cost Price of hole drilled and accepted, as listed on the Contract Bid Proposal.

Payment shall be made at the Contract Unit Price per Linear Foot as specified in the Contract Documents and accepted by the ENGINEER.

## P. ITEM NO. 16 – DRILL NOMINAL 22-INCH DIAMETER BOREHOLE USING REVERSE AIR METHOD

This pay item includes the actual length of borehole drilled and accepted and shall be measured vertically from the bottom of the 24-inch diameter well casing to the bottom of the nominal 22-inch diameter drilled hole interval, including but not be limited to the furnishing of all material, labor and equipment necessary to complete the work as specified in the Contract Documents and accepted by the ENGINEER.

Payment shall be made at the Contract Unit Price per Linear Foot as specified in the Contract Documents and accepted by the ENGINEER.

## Q. ITEM NO. 17 - REMOVE EXISTING SCREEN AND RISER

This pay item shall include removal of the existing stainless-steel well screen, gravel pack and riser. The existing outer well casing shall remain in place, undamaged.

Payment for this item shall be at the Contract Unit Price for Each successful complete removal of the well screen and riser accepted by the ENGINEER.

**R. ITEM NO. 18 – CLEAN OUT OF BOREHOLE TO TOTAL DEPTH**

This pay item shall include the complete reamed borehole to total depth as approved by the ENGINEER, including but not limited to of all material, labor and equipment necessary to complete the work in accordance with the Contract Documents and accepted by the ENGINEER.

Payment shall be made at the Contract Unit Price for Each successfully borehole clean out as specified in the Contract Documents and accepted by the ENGINEER.

**S. ITEM NO. 19 – REMOVE SURFACE CASING, OUTER CASING, INNER CASING, SCREEN, USING OVERDRILL METHOD, BACKFILL BOREHOLE WITH GRAVEL**

This pay item shall include the complete removal of the existing well surface, outer, and inner well casings and screen using the overdrill method and backfilling of the borehole with gravel as specified in the Contract Documents including but not limited to all equipment, temporary casings, labor, materials, required to successfully complete the item in accordance with the Contract Documents.

Payment shall be made at the Contract Unit Price for Each completed successful overdrill as specified in the Contract Documents and accepted by the ENGINEER.

**T. ITEM NO. 20 – FURNISH AND INSTALL 24-INCH DIAMETER SCHEDULE 40 PVC WELL CASING**

This pay item shall include the actual length of 24-inch diameter schedule 40 PVC casing installed below land surface, and accepted as specified by the ENGINEER, including but not limited to time, all labor, equipment, centralizers, and materials to properly install the riser as described in Contract Documents.

Payment shall be made at the Contract Unit Price per Linear Foot as specified in the Contract Documents and accepted by the ENGINEER.

**U. ITEM NO. 21 – CEMENT GROUT 24-INCH DIAMETER SCHEDULE 40 PVC WELL CASING IN PLACE**

This pay item shall include cement for the 24-inch diameter PVC well casing, in place and accepted by the ENGINEER, and includes but is not limited to materials, labor, equipment, delivery charges, additives, operations, setup and removal of equipment for grout emplacement as specified in the Contract

Documents and accepted by the ENGINEER.

Payment shall be made at the Contract Unit Price per 94-pound sack of cement furnished and accepted by the ENGINEER as determined by delivery tickets and field observations, in accordance with Contract Documents.

## V. ITEM NO. 22 – FURNISH AND INSTALL 16-INCH DIAMETER STAINLESS STEEL SCREEN

This pay item shall include the actual length of 16-inch diameter 316 stainless steel well screen installed below land surface, and accepted as specified by the ENGINEER, including but not limited to time, all labor, equipment, centralizers, and materials to properly install the screen as described in Contract Documents.

Payment shall be made at the Contract Unit Price per Linear Foot as specified in the Contract Documents and accepted by the ENGINEER.

## W. ITEM NO. 23 – FURNISH AND INSTALL 16-INCH DIAMETER SDR17 PVC RISER CASING

This pay item shall include the actual length of 16-inch diameter SDR17 PVC Riser Casing installed below land surface, and accepted as specified by the ENGINEER, including but not limited to time, all labor, equipment, centralizers, and materials to properly install the riser as described in Contract Documents.

Payment shall be made at the Contract Unit Price per Linear Foot as specified in the Contract Documents and accepted by the ENGINEER.

## X. ITEM NO. 24 – FURNISH AND INSTALL 12-INCH DIAMETER STAINLESS STEEL SCREEN

This pay item shall include the actual length of 12-inch diameter 316 stainless steel well screen installed below land surface, and accepted as specified by the ENGINEER, including but not limited to time, all labor, equipment, centralizers, and materials to properly install the screen as described in Contract Documents.

Payment shall be made at the Contract Unit Price per Linear Foot as specified in the Contract Documents and accepted by the ENGINEER.

## Y. ITEM NO. 25 – FURNISH AND INSTALL 12-INCH SDR17 PVC RISER CASING

This pay item shall include the actual length of 12-inch diameter SDR17 Riser Casing installed below land surface, and accepted as specified by the ENGINEER, including but not limited to time, all labor, equipment,

centralizers, and materials to properly install the riser as described in Contract Documents.

Payment shall be made at the Contract Unit Price per Linear Foot as specified in the Contract Documents and accepted by the ENGINEER.

## Z. ITEM NO. 26 – FURNISH AND INSTALL WELL GRAVEL PACK

This pay item includes the work required to furnish and successfully install well gravel pack and shall include, but not be limited to, all equipment, materials and labor to satisfactorily disinfect and install gravel pack from total depth to a depth specified by the ENGINEER.

Payment shall be made at the Contract Unit Price per Cubic Foot as specified in the Contract Documents and accepted by the ENGINEER as determined by delivery tickets and field observations, in accordance with Contract Documents.

## AA. ITEM NO. 27 – SQUEEZE GROUT

This pay item shall include cement squeeze grout operations required for successful pressure squeeze grouting of the existing well casing, including but not limited to of all material, grout, labor and equipment necessary to complete the work in accordance with the Contract Documents and accepted by the ENGINEER.

Payment shall be made at the Contract Unit Price for Each successful pressure squeeze grout as specified in the Contract Documents and accepted by the ENGINEER.

## BB. ITEM NO. 28 – AIRLIFT DEVELOPMENT

This pay item includes the work required to perform airlift of the borehole, as described in the specifications, and shall include, but not be limited to, all material, labor, equipment and preparations necessary to complete the scope of work as specified in the Contract Documents and accepted by the ENGINEER.

Payment shall be at the Contract Unit Price per Hour for airlift development as listed on the Contract Bid Proposal. Only hours of actual airlift development shall be considered for payment of this item as approved by the ENGINEER.

## CC. ITEM NO. 29 – JETTING WITH SIMULTANEOUS AIRLIFT DEVELOPMENT

This pay item includes the work required to perform jetting and clean out of the borehole, as described in the specifications, to the total drilled depth and shall include, but not be limited to, all material, labor, equipment and

preparations necessary to complete the scope of work as specified in the Contract Documents and accepted by the ENGINEER.

Payment shall be at the Contract Unit Price per Hour for jetting the hole (including simultaneous airlift) as specified or reverse air clean out of the hole as listed on the Contract Bid Proposal. Only hours of actual jetting or reverse air clean out of the hole shall be considered for payment of this item as approved by the ENGINEER.

## DD. ITEM NO. 30 – PUMP DEVELOPMENT

This pay item includes the work required to perform pump development, as described in the specifications, and shall include, but not be limited to, all material, labor, equipment, fuel, and preparations necessary to complete the scope of work as specified in the Contract Documents and accepted by the ENGINEER.

Payment shall be at the Contract Unit Price per Hour for pump development as listed on the Contract Bid Proposal. Only hours of actual pump development shall be considered for payment of this item as approved by the ENGINEER.

## EE. ITEM NO. 31 – STEP-RATE TESTING

This pay item includes step-rate pump test including, but not be limited to, the furnishing of all material, labor, fuel and equipment necessary to successfully complete the test in accordance with the Contract Documents as accepted by the ENGINEER.

Payment shall be at the Contract Unit Price per Hour for step-rate testing as listed on the Contract Bid Proposal. Only hours of actual step-rate pumping shall be considered for payment of this item as approved by the ENGINEER.

## FF. ITEM NO. 32 – WELL DISINFECTION

This pay item shall include, but not be limited to, all time, equipment, materials and labor to satisfactorily disinfect the well as required by the Contract Documents and state and local laws and regulations as related to this pay item.

Payment of this item shall be made at the Contract Unit Price for Each successful disinfection as listed on the Contract Bid Proposal as specified in the Contract Documents and accepted by the ENGINEER.

## GG. ITEM NO. 33 – BACTERIOLOGICAL SAMPLING AND CLEARANCE

This pay item shall include, but not be limited to, all time, equipment, materials and labor to satisfactorily and perform bacteriological sampling and

testing, as required by the Contract Documents and state and local laws and regulations as related to this pay item. The CONTRACTOR shall be responsible for costs associated with testing, re-chlorination, re-sampling, and re-testing as needed to satisfactorily disinfect the well and obtain passing and acceptable results from CONTRACTOR approved laboratory and OWNER laboratory as described in Contract Documents.

Payment of this item shall be made at the Contract Unit Price for Each successful clearance per well as listed on the Contract Bid Proposal as specified in the Contract Documents and accepted by the ENGINEER.

## HH. ITEM NO. 34 –VIDEO LOGGING (STATIC AND DYNAMIC)

This item shall include video logging (in both static and dynamic conditions) including, but not be limited to, equipment required for the flushing of the well with potable water to provide a clear color video image, the furnishing of all material, labor and equipment required, as specified in contract documents.

Payment shall be made at the Contract Unit Price for Each successful video log as specified in the Contract Documents and accepted by the ENGINEER. Only video logs accepted by the ENGINEER shall be paid for under this pay item.

## II. ITEM NO. 36 – GEOPHYSICAL LOGGING

This pay item shall include successful complete geophysical well logging but not be limited to furnishing of all material, labor and equipment necessary to complete the work in accordance with the Contract Documents and accepted by the ENGINEER.

Payment for this item shall be made at the Contract Unit Price for Each well as listed on the Bid Schedule of Values

## JJ. ITEM NO. 37 – FORMATION WATER DISPOSAL SYSTEM

This pay item includes formation water disposal system including but not limited to the furnishing of all labor, time, materials, equipment, removal of the piping from the project site after construction is complete, cost to maintain the disposal and settling system, required piping, fittings, pumps, monitoring, operation and maintenance.

Payment of this item shall be made at the Contract Unit Price for Each well formation water disposal system as listed on the Bid Schedule of Values.

## KK. ITEM NO. 38 – WELL ABANDONMENT

This pay item includes the work required for the successful well abandonment of the existing production well in accordance with state and

federal regulations and as specified in contract documents, including but not limited to the cost for necessary supervised labor, materials, and equipment.

Payment of this item shall be made at the Contract Unit Price for Each well successfully abandoned as listed on the Bid Schedule of Values.

## LL. ITEM NO. 39 – MAJOR SITE RESTORATION

The work specified under this pay item includes restoring the well site(s) to its original condition, the intended grades as shown on the site plan to the satisfaction of the OWNER, and shall include all materials, equipment, tools and labor necessary to completely restore the site as accepted by the OWNER. Either minor or major site restorations shall be paid on one well, not both. The determination as to the necessity of site restoration will be made prior to initiation of activities and will be made by the OWNER or the ENGINEER.

Payment shall be at the Contract Unit Price for Each well major site restoration as listed on the Contract Bid Proposal and accepted by the OWNER.

## MM. ITEM NO. 40 – MINOR SITE RESTORATION

The work specified under this pay item includes restoring the well site(s) to its original condition, the intended grades as shown on the site plan to the satisfaction of the OWNER, and shall include all materials, equipment, tools and labor necessary to completely restore the site as accepted by the OWNER. Either minor or major site restorations shall be paid on one well, not both. The determination as to the necessity of site restoration will be made prior to initiation of activities and will be made by the OWNER or the ENGINEER.

Payment shall be at the Contract Unit Price for Each well minor site restoration as listed on the Contract Bid Proposal and accepted by the OWNER.

## NN. ITEM NO. 41 – EXTRA WORK BY DRILLING CREW (FOREMAN AND ONE CREW MEMBER) WITH DRILLING EQUIPMENT

This pay item includes OWNER approved extra work performed by the drilling crew (consisting of Foreman and one crew member) with drilling equipment, specifically drilling rig.

Payment shall be made at the Contract Unit Price based on the amount of approved time used based on the OWNER's ENGINEER. Work included under separate pay items will not be paid under the extra work pay item. CONTRACTOR must receive approval from OWNER and OWNER's ENGINEER to bill against this Pay Item before actual time is incurred. Failure

to do so will result in no payment of this Pay Item by OWNER.

**OO. ITEM NO. 42 – EXTRA WORK BY DRILLING CREW (FOREMAN AND ONE CREW MEMBER) WITH OTHER EQUIPMENT**

This pay item includes OWNER approved extra work performed by the drilling crew (consisting of Foreman and one crew member) with other construction equipment, including but not limited to crane, boom truck, backhoe etc.

Payment shall be made at the Contract Unit per hour based on the amount of approved time used by the OWNER's ENGINEER. Work included under separate pay items will not be paid under the extra work pay item. CONTRACTOR must receive approval from OWNER and OWNER's ENGINEER to bill against this Pay Item before actual time is incurred. Failure to do so will result in no payment of this Pay Item by OWNER.

**PP. ITEM NO. 43 – EXTRA WORK BY DRILLING CREW (FOREMAN AND ONE CREW MEMBER) WITHOUT DRILLING EQUIPMENT**

This pay item includes OWNER approved extra work performed by the drilling crew (consisting of Foreman and one crew member) without drilling equipment.

Payment shall be made at the Contract Unit per hour based on the amount of approved time used by the OWNER's ENGINEER. Work included under separate pay items will not be paid under the extra work pay item. CONTRACTOR must receive approval from OWNER and OWNER's ENGINEER to bill against this Pay Item before actual time is incurred. Failure to do so will result in no payment of this Pay Item by OWNER.

**QQ. ITEM NO.44 – STANDBY TIME WITH RIG AND DRILLING CREW ON-SITE**

This pay item includes OWNER approved standby time as required with the drilling crew and drilling rig on site.

Payment shall be made at the Contract Unit Price based on the number of approved hours required as determined by the OWNER's ENGINEER. CONTRACTOR must receive approval from OWNER and OWNER's ENGINEER to bill against this Pay Item before actual time is incurred. Failure to do so will result in no payment of this Pay Item by OWNER.

**RR. ITEM NO. 45 – STANDBY TIME WITH RIG AND DRILLING CREW OFF-SITE**

This pay item includes OWNER approved standby time as required with the drilling crew and drilling rig off site.

Payment shall be made at the Contract Unit Price based on the number of approved hours required as determined by the OWNER's ENGINEER. CONTRACTOR must receive approval from OWNER and OWNER's ENGINEER to bill against this Pay Item before actual time is incurred. Failure to do so will result in no payment of this Pay Item by OWNER.

**SS. ITEM NO. 46 – MACHINE SHOP WELDING**

This pay item shall include, but not be limited to, all equipment, materials and labor to satisfactorily provide machine shop welding services.

Payment of this item shall be made at the Contract Unit Price per hour as listed on the Bid Schedule of Values, as specified in the Contract Documents and accepted by the ENGINEER.

**TT. ITEM NO. 47 – ONSITE WELDING**

This pay item shall include, but not be limited to, all equipment, materials and labor to satisfactorily provide onsite welding services.

Payment of this item shall be made at the Contract Unit Price per hour as listed on the Bid Schedule of Values, as specified in the Contract Documents and accepted by the ENGINEER.

**UU. ITEM NO. 48 – FURNISH & INSTALL 1-INCH PVC STILLING WELL UP TO 60-FT TO 80-FT IN LENGTH**

This pay item shall include, but not be limited to, all equipment, materials and labor to satisfactorily furnish and install new 1-inch diameter PVC stilling well 60 feet to 80 feet in length.

Payment of this item shall be made at the Contract Unit Price per foot as listed on the Bid Schedule of Values, as specified in the Contract Documents and accepted by the ENGINEER.

**VV. ITEM NO. 49 – FURNISH & INSTALL 2 NEW SS SAFETY CABLES UP TO 60-FT TO 80-FT IN LENGTH**

This pay item shall include, but not be limited to, all equipment, materials and labor to satisfactorily furnish and install new stainless-steel safety cables 60 feet to 80 feet in length.

Payment of this item shall be made at the Contract Unit Price per foot as listed on the Bid Schedule of Values, as specified in the Contract Documents and accepted by the ENGINEER.

## WW. ITEM NO. 50 – PUMP MAINTENANCE

This pay item shall include, but not be limited to, all equipment, materials and labor to satisfactorily perform pump maintenance of OWNER pumps for repair. This pay item shall include disassembly and inspection of the well pump and shall not be duplicated with Motor Maintenance pay item. Replacements of pump parts shall be paid for under Unidentified Parts Allowance pay item.

Payment of this item shall be made at the Contract Unit Price per hour as listed on the Bid Schedule of Values, as specified in the Contract Documents and accepted by the ENGINEER.

## XX. ITEM NO. 51 – MOTOR MAINTENANCE

This pay item shall include, but not be limited to, all equipment, materials and labor to satisfactorily perform motor maintenance of OWNER motors for repair. This pay item shall include disassembly and inspection of the pump motor and shall not be duplicated with Pump Maintenance pay item. Replacements of pump parts shall be paid for under Unidentified Parts Allowance pay item.

Payment of this item shall be made at the Contract Unit Price per hour as listed on the Bid Schedule of Values, as specified in the Contract Documents and accepted by the ENGINEER.

## YY. ITEM NO. 52 – UNIDENTIFIED PARTS ALLOWANCE

This item is intended for specialized small parts and procurement of items not stocked by the OWNER needed to complete rehabilitation of wells and avoid delays associated with placing the wells back into service.

Payment of this item shall be made at the Contract Lump Sum Price as listed on the Bid Schedule of Values, as specified in the Contract Documents and accepted by the ENGINEER.

## ZZ. ITEM NO. 53 – MAINTENANCE OF TRAFFIC

This pay item shall include, but not be limited to, all equipment, materials, permitting, and labor to provide maintenance of traffic in accordance with Contract Documents.

Payment of this item shall be made at the Contract Unit Price for each as listed on the Bid Schedule of Values, as specified in the Contract Documents and accepted by the ENGINEER.

**END OF SECTION**

## SECTION 01 31 13

## PROJECT COORDINATION

# PART I GENERAL

## 1.01 DESCRIPTION

A. ENGINEER shall schedule and administer a preconstruction meeting, periodic progress meetings, and specially called meetings throughout the progress of the work. ENGINEER shall:

1. Distribute written notice of each meeting.
2. Make physical arrangements for meetings.
3. Preside at meetings.
4. Record the minutes, include all significant proceedings and decisions.
5. Reproduce and distribute copies of minutes:
   a. To all participants in the meeting.
   b. To all parties affected by decisions made at the meeting.

B. Representatives of CONTRACTORs, SUBCONTRACTORs and suppliers attending the meetings shall be qualified and authorized to act on behalf of the entity each represents.

## 1.02 RELATED REQUIREMENTS SPECIFIED ELSEWHERE

1. Section 01 11 00 - Summary of Work

## 1.03 PRE-CONSTRUCTION MEETING

A. To be held prior to the Notice to Proceed.

B. Location: The project site, or a location designated by the ENGINEER.

C. Attendance:

1. OWNER's Representative
2. ENGINEER's Representative
3. CONTRACTOR

4. CONTRACTOR's Superintendent

5. Major SUBCONTRACTORs

6. Others as appropriate

D. Agenda:

1. Record of Attendance.

2. Project Summary Description.

3. Local Utilities to be affected.

   a. Water lines
   b. Sewer lines
   c. Telephone lines
   d. Cable TV lines
   e. Electric lines
   f. Roads

4. CONTRACTOR Responsibilities:

   a. Start date
   b. Completion date
   c. Liquidated damages
   d. Contract amount
   e. Work schedule
   f. Space utilization
   g. Progress Payment Application
   h. As-builts (Records/Drawings)
   i. Photographs
   j. Shop drawings
   k. SUB
   l. Project coordination

5. OWNER Responsibilities:

   a. Monthly meetings
   b. Special meetings
   c. Partial and final payment
   d. Change Orders
   e. Public announcements and public relations
   f. Project acceptance

6. ENGINEER Responsibilities:

a. Technical representative of OWNER
b. Interpreter of Contract Documents
c. Periodic inspections of job progress
d. Review partial and final payment applications
e. Prepare Change Orders
f. Review shop drawings
g. Review record drawings
h. Perform final inspection and issue certificate of completion

7. Resident Inspector Responsibilities:

a. ENGINEER's and OWNER's representative on site
b. Review materials and work and report any deficiencies to ENGINEER
c. Review applications for payment
d. Work with CONTRACTOR on public notification of work items
e. Attend progress meetings
f. Observe testing work
g. Maintain daily diary of work tasks
h. Furnish reports to ENGINEER as deemed advisable

**1.04 PROGRESS MEETINGS**

A. To be held periodically as required by progress of the work as determined by the OWNER.

B. Location of the meetings: Project site, or a location designated by the OWNER or ENGINEER.

C. Attendance:

1. OWNER's Representative

2. ENGINEER's Representative

3. SUBCONTRACTORs as appropriate

4. Suppliers as appropriate

**1.05 EMERGENCY MEETINGS**

A. May be called by OWNER, ENGINEER, or CONTRACTOR with a minimum of three hours notice to resolve conditions of an emergency nature.

## PART II PRODUCTS

Not used.

## PART III EXECUTION

Not used.

**END OF SECTION**

## SECTION 01 32 16

## CONSTRUCTION PROGRESS SCHEDULE

## PART I GENERAL

### 1.01 REQUIREMENTS INCLUDED

A. Promptly after award of the Contract, Contractor shall prepare and submit to the Engineer estimated construction progress for the Work, with sub-schedules of related activities which are essential to its progress.

B. Coordinate the work and scheduling with and around other contractors and individual trades performing work on the Project

C. Submit revised progress schedules with each application for payment or at each monthly progress meeting. Applications for payment shall not be reviewed or accepted without Contractor submittal of updated progress schedules.

D. Progress Schedule shall become part of Contract Documents after approval by Engineer.

### 1.02 RELATED REQUIREMENTS

A. In other parts of the Contract Documents:

1. General Conditions

B. Specified in other sections:

1. Section 01 11 00: Summary of Work
2. Section 01 33 00: Submittals

### 1.03 FORM OF SCHEDULES

A. Prepare schedules in the form of a horizontal bar chart as follows:

1. Provide separate horizontal bar for each trade or operation
2. Horizontal time scale: Identify the first work day of each week.
3. Scale and spacing: To allow space for notations and future revisions.
4. Minimum sheet size: 11" x 17"

B. Format of listings: The chronological order of the start of each item of work.

C. Identification of listings: By major specification section numbers.

## 1.04 CONTENT OF SCHEDULES

A. Construction Progress Schedule shall:

1. Show the complete sequence of construction by activity.
2. Show the dates for the beginning and completion of each major element of construction; specifically, list:

    a. Subcontractor work
    b. Utility construction
    c. Restoration
    d. Work that affects WTP operations

3. Show projected percentage of completion for each item, as of the first day of each month.

## 1.05 PROGRESS REVISIONS

A. Indicate progress of each activity to date of submission
B. Show changes occurring since previous submission of Schedule:

1. Major changes in scope.
2. Activities modified since previous submission.
3. Revised projections of progress and completion.
4. Other identifiable changes.

C. Provide a narrative report as needed to define:

1. Problem areas, anticipated delays, and the impact on the schedule.
2. Corrective action recommended, and its effect.
3. The effect of changes on schedules of other prime contractors.

## 1.06 SUBMISSIONS

A. Submit initial schedules within ten (10) days after award of Contract; Engineer will review schedules for information only.

B. Submit revised progress schedules with each application for payment, or at each monthly progress meeting.

C. Submit the number of opaque reproductions which the Contractor requires, plus two (2) additional copies; one for Owner and one for Engineer.

## 1.07 DISTRIBUTION

A. Distribute copies of approved schedules to:

1. Job site file
2. Subcontractors
3. Other concerned parties

B. Instruct recipients to report promptly to the Contractor, in writing, any problems anticipated by the projections shown in the schedule.

## PART II PRODUCTS

Not used.

## PART III EXECUTION

Not used.

**END OF SECTION**

(This page has been intentionally left blank.)

## SECTION 01 33 00

## SUBMITTALS

## PART I GENERAL

### 1.01 SCOPE OF WORK

A. CONTRACTOR shall submit to the ENGINEER, shop drawings, project data, and samples required by the specification sections.

B. The ENGINEER'S review is only for general conformance with the design concept of the project and general compliance with the information given in the Contract Documents. Corrections or comments made on the shop drawings during the ENGINEER'S review do not relieve the CONTRACTOR from compliance with the requirements of the Contract Documents. Review of a specific item shall not include approval of an assembly of which the item is a component. The CONTRACTOR is responsible for: dimensions to be confirmed and correlated at the job site; information that pertains to the fabrication processes or to the means, methods, techniques, sequences, and procedures of construction; impact on other work; coordination of CONTRACTOR'S Work with that of all other trades; and for performing all work in a safe and satisfactory manner.

### 1.02 SCHEDULES

A. The CONTRACTOR shall provide an updated construction schedule to the OWNER or ENGINEER during each monthly progress meeting.

B. Prepare and submit with the Construction Schedule, a separate schedule listing dates for submission and review of shop drawings, project data, and samples that shall be needed for each product or piece of equipment.

C. Coordinate and prepare the delivery and processing of submittals with the performance of the work so that the work is not delayed by submittals. Coordinate and sequence different categories of submittals for the same Work, and for interfacing units of Work, so that one is not delayed for coordination with another.

D. No extension of time shall be allowed because of the CONTRACTOR'S failure to properly coordinate and sequence submittals.

E. Do not proceed with purchasing, fabrication and delivery of work related to a submittal until the submittal procedure is successfully complete. CONTRACTOR is proceeding at own risk if purchase of materials is done before submittal review.

F. Coordinate fabrication and delivery of CONTRACTOR furnished materials.

## PART II PRODUCTS

### 2.01 SHOP DRAWINGS

A. Original drawings, prepared by CONTRACTOR, Subcontractor, Supplier or Distributor, which illustrate portions of the work; showing fabrication, layout, setting, or erection details.

B. Prepare submittals by a qualified detailer.

C. Identify details by reference to sheet numbers and detail shown on Contract Drawings.

### 2.02 PROJECT DATA

A. Includes standard printed information on materials, products and systems not custom prepared for this project. Collect the required data into one (1) submittal for each material, product or system; and mark each copy to show which choices and options are applicable to the project.

B. Manufacturer's standard schematic drawings and standard printed recommendations for application and use, compliance with standards, application of labels and seals, notation of field measurements which have been checked, and special coordination requirements:

1. Modify drawings to delete information which is not applicable to project.
2. Supplement standard information to provide additional information applicable to project.

C. Manufacturer's catalog sheets, brochures, diagrams, schedules, performance charts, illustrations and other standard descriptive data.

1. Clearly mark each copy to identify pertinent materials, products or models.
2. Show dimensions and clearances required.
3. Show performance characteristics and capacities.
4. Show wiring diagrams and controls.

### 2.03 SAMPLES

A. Physical examples to illustrate materials, equipment or workmanship, and to establish standards by which completed work is judged.

B. Office samples of sufficient size and quantity to clearly illustrate:

1. Functional characteristics of product or material, with integrally related parts and attachment devices.
2. Full range of color samples.

C. Field samples and mock-ups:

1. Erect at the project site at a location acceptable to the OWNER.
2. Construct each sample or mock-up complete, including work of all trades required in finished work.

## 2.04 PAY REQUESTS

A. Pay Requests shall be made in accordance with the requirements of the Agreement between OWNER and CONTRACTOR.

B. Amount of Retainage shall be 10% unless otherwise stated in the Agreement between OWNER and CONTRACTOR.

# PART III EXECUTION

## 3.01 CONTRACTOR RESPONSIBILITIES

A. Review shop drawings, project data and samples for compliance with these Specifications prior to submission.

B. Verify:
1. Field measurements.
2. Field construction criteria.
3. Catalog numbers and similar data.

C. Coordinate each submittal with requirements of the work and of the Contract Documents.

D. The CONTRACTOR's responsibility for errors and omissions in submittals is not relieved by the ENGINEER'S review of submittals.

E. The CONTRACTOR's responsibility for deviations in submittals from the requirements of the Contract Documents is not relieved by the ENGINEER'S review of submittals, unless the OWNER or the ENGINEER gives written acceptance of specific deviations.

F. Notify the ENGINEER, in writing at the time of submission, of deviations in submittals from the requirements of the Contract Documents.

G. Begin no work requiring submittals until return of submittals with the ENGINEER'S stamp and initials or signature indicating review and approval.

H. After ENGINEER review, distribute copies.

## 3.02 SUBMISSION REQUIREMENTS

A. Schedule submissions at least 14 days before dates reviewed submittals will be needed; the OWNER and ENGINEER shall have a maximum of 14 days for review of the submittal following receipt, for approval or rejection

B. Submit number of copies of Shop Drawings, Project Datum, and Samples which CONTRACTOR requires for distribution plus 4 copies for the OWNER and ENGINEER.

C. Accompany submittals with transmittal letter, in duplicate, containing:

1. Date.
2. Project title and number.
3. CONTRACTOR'S name and address.
4. Notification of deviations from Contract Documents.
5. Other pertinent data.

D. Submittals must include:

1. Date of submittal and revision dates.
2. Project title and number.
3. The names of:
   a. ENGINEER.
   b. CONTRACTOR.
   c. Subcontractor.
   d. Supplier.
   e. Manufacturer.
   f. Separate detailer when pertinent.
4. Identification of product or material.
5. Relation to adjacent structure or materials.
6. Field dimensions, clearly identified as such.
7. Identification of deviations from Contract Documents.
8. CONTRACTOR'S stamp, initialed or signed, certifying review of submittal, verification of field measurements and compliance with Contract Documents.

E. Electronic submittals are acceptable.

## 3.03 RESUBMISSION REQUIREMENTS

A. Shop Drawings:

1. Revise initial drawings as required and resubmit as specified for initial submittal.
2. Indicate on drawings any changes which have been made other than those requested by ENGINEER.

B. Project Data and Samples:

1. Submit new datum and samples as required for initial submittal.

## 3.04 DISTRIBUTION OF SUBMITTALS AFTER REVIEW

A. Distribute copies of Shop Drawings and Project Datum which carry ENGINEER'S stamp, to:

1. Contractor's file.
2. Job site file.
3. Record Documents file.
4. Other prime contractors.
5. Subcontractors.
6. Supplier.
7. Fabricator.

C. Distribute samples as directed.

**END OF SECTION**

(This page intentionally left blank.)

## SECTION 01 52 00

## CONSTRUCTION FACILITIES AND TEMPORARY CONTROLS

## PART I GENERAL

### 1.01 REQUIREMENTS INCLUDED

A. Furnish install and maintain all methods, equipment, and temporary utilities as required to provide controls over environmental conditions at the construction site and related areas under the CONTRACTOR'S influence. Remove physical evidence of temporary facilities upon completion of work.

B. Providing adequate facilities at every stage of performing the work is the CONTRACTOR'S sole responsibility, and is not limited by the requirements hereof.

C. Except as otherwise indicated, the cost of providing and using temporary utility services is to be included in the Contract Sum.

D. Maintain distinct markers for underground lines and protect from damage during excavation operations.

E. These references shall govern the work except where they conflict with the OWNER'S terms and conditions. In case of conflict, the OWNER'S terms and conditions shall govern to the extent of such difference.

### 1.02 REQUIREMENTS OF REGULATORY AGENCIES

A. Comply with the National Electrical Code.

B. Comply with Federal, State, and local codes, ordinances, rules, regulations, standards, and permits.

C. Comply with the "Manual of Accident Prevention in Construction" by the Associated General CONTRACTORs (AGC).

D. Comply with all utility company requirements.

### 1.03 HURRICANE PREPAREDNESS PLAN

A. The CONTRACTOR must submit a hurricane preparedness plan to ENGINEER for approval prior to site mobilization.

B. The CONTRACTOR shall implement hurricane preparedness plan upon reasonable concern that a hurricane may strike or as directed by the ENGINEER.

## PART II PRODUCTS

### 2.01 MATERIALS

Materials may be new or used but must be adequate in capacity for the required usage, must not create unsafe conditions, and must not violate requirements to applicable codes, ordinances, rules, regulations, and standards.

### 2.02 TEMPORARY ELECTRICITY AND LIGHTING

A. Install circuit and branch wiring, with area distribution boxes located so that power and lighting is available throughout the construction by the use of construction type power cords.

B. Provide adequate artificial lighting for all areas of work when natural lighting is not adequate for work and night work is allowed by the contract documents.

### 2.03 TEMPORARY PHONE SERVICE

A. The CONTRACTOR shall provide onsite phone service to the CONTRACTOR'S project superintendent and for each driller on site. Phone supplied personnel shall be available by phone during all working hours during execution of the scope of work.

B. Cellular phones are acceptable.

### 2.04 TEMPORARY WATER

A. Only potable quality water will be used for well construction. Water necessary for construction activities shall be provided by the OWNER at no cost to the CONTRACTOR. Wasteful use of OWNER'S water by CONTRACTOR will forfeit CONTRACTOR'S use of OWNER'S water and CONTRACTOR will be required to purchase water elsewhere.

B. CONTRACTOR shall provide adequate backflow prevention in line with potable water service that is acceptable to OWNER.

C. OWNER'S use of water takes priority at all times. CONTRACTOR shall temporarily restrict or discontinue use of OWNER'S water if required to do so by OWNER.

## 2.05 TEMPORARY SANITARY FACILITIES

A. Provide sanitary facilities in compliance with laws, ordinances and regulations.

B. Service, clean and maintain facilities and enclosures.

C. OWNER'S plumbing facilities shall not be used by contractor personnel.

## 2.06 TEMPORARY ACCESS ROAD, PARKING AND TRAFFIC CONTROL

A. Construct and maintain new and existing temporary access roads over designated easements from public thoroughfare to the site.

B. Maintain traffic areas free of excavated materials, construction equipment, products, and debris.

C. Traffic control warning signs and barricades shall be in strict accordance with the provisions of the Florida Department of Transportation Manual on Traffic Controls and Safe Practices for Street and Highway Construction Maintenance and Utility Operations latest revision.

D. No road or street shall be closed to the public except with the permission of the ENGINEER and appropriate governmental agency.

E. The work shall be conducted at all times so as to ensure the least possible obstruction to traffic and inconvenience to the general public and the residents in the vicinity of the work, and to insure the protection of persons and property.

F. Well site discharge locations are shown on the drawings and security requirements apply. CONTRACTOR shall secure all gates and fences per contract requirements.

G. Shared access roads to, from, adjacent to, and around the well sites shall be kept open at all times.

## 2.07 TEMPORARY CONTROLS

A. Noise Control:

1. Between the hours of 6:00PM and 8:00AM, Monday through Friday, noise levels shall not exceed ten (10) dbA above the ambient noise level, when measured within 50 feet of the noise source, without written permission of the OWNER.

2. Between the hours of 6:00PM Friday and 8:00AM Monday, noise levels shall not exceed ten (10) dbA above the ambient noise level, when measured within 50 feet of the noise source, without written permission of the OWNER.

3. Between the hours of 6:00PM on the day prior to recognized Palm Beach County Holidays to 8:00AM on the day after such Holidays, noise levels shall not exceed ten (10) dbA above the ambient noise levels, when measured within 50 feet of the noise source, without written permission of the OWNER.

4. The CONTRACTOR shall provide and install soundproofing barriers, provide mufflers on equipment, and take whatever other steps are necessary during operations to ensure that noise levels conform to the Village of Wellington or other applicable noise ordinances. Working hours for construction, demolition, drilling, rehabilitation, site work, and development are 7:00AM to 7:00PM.

5. CONTRACTOR shall immediately cease operations and mitigate sound to the extent required by Village ordinance if residents complain about noise as applicable.

B. Light Control:

1. CONTRACTOR shall mitigate stray light during approved night work by directing light source to the work area only.

2. Lighting shall be directed away from nearby residences and properties.

3. CONTRACTOR shall immediately mitigate stray light upon complaint.

4. Lighting levels shall comply with applicable federal and state regulations.

C. Dust Control:

1. Provide positive methods and apply dust control materials to minimize raising dust form construction operations, and provide positive means to prevent air-borne dust from dispersing into the atmosphere.

2. CONTRACTOR shall immediately mitigate dust upon complaint

D. Water Control:

1. Provide methods to contain storm water drainage within the CONTRACTORS approved work area and prevent storm water and

project-related water containing turbidity above the allowable standard from entering adjacent surface water bodies. Provide settling and treatment before discharge of water to approved discharge location.

2. Provide methods to control surface water to prevent damage to the project, the site, or adjoining properties.

3. Control fill, grading, and ditching to direct surface drainage away from excavation, trenches, pits, and other construction areas, and to direct drainage to proper runoff.

4. Provide, operate, and maintain hydraulic equipment of adequate capacity to control surface water.

5. Dispose of drainage water in a manner to prevent flooding, erosion, or other damage to any portion of the site or adjoining areas.

E. Debris and Waste Materials Control:

1. Maintain all areas under the CONTRACTOR's control free of extraneous debris, garbage, and waste matter.

2. Initiate and maintain a specific program to prevent accumulation of debris at the construction site, storage, and parking areas, or along access roads and haul routes.

3. Provide acceptable containers for deposit of debris and waste.

4. Prohibit overloading of trucks to prevent spillage on access and haul roads.

5. Provide periodic inspection of traffic areas to enforce requirements.

6. Schedule periodic and as needed collection and disposal of debris and waste.

7. Provide additional collections and disposal of debris whenever the periodic schedule is inadequate to prevent accumulation.

F. Pollution Control:

1. Provide methods, means, and facilities required to prevent contamination of soil, water, or air by the discharge of noxious substances from construction operations.

2. Immediately remove and properly dispose of all contaminated materials upon discovery of spillage of noxious substances.

3. Take special precautions to prevent harmful substances form entering public waters.

4. Provide systems for control of atmospheric pollutants and prevent toxic concentrations of chemicals.

G. Erosion Control:

1. Plan and execute construction and earthwork by methods to control surface drainage from cuts and fills and from borrow and waste disposal areas to prevent erosion and sedimentation.

2. Hold areas of bare soil exposed at one time to a minimum and provide temporary control measures such as berms, dikes, and drains.

3. Construct fills and waste areas by selective placement to eliminate surface silts and clays from eroding.

4. Construct and maintain properly installed silt fencing and hay bales around the perimeter of the construction area to control surface drainage and runoff.

H. Vibration Control:

1. The CONTRACTOR shall plan and execute construction activities by methods to control vibration to prevent damage to surrounding foundations, structures, and buildings. The CONTRACTOR shall protect all existing structures from damage from vibration activities. Vibration control and compliance are the sole responsibility of the CONTRACTOR.

## PART III EXECUTION

### 3.01 GENERAL

A. Comply with all applicable requirements of local building codes.

B. Maintain and operate systems to assure continuous service.

C. Modify and extend systems as work progress requires.

D. Preserve from damage all property along the line of work or which is in the vicinity of or is in any way affected by the Work. Wherever such property is

damaged due to the activities of the CONTRACTOR, it shall be immediately restored to its original condition by the CONTRACTOR at no cost to the OWNER.

E. Preconstruction Video

1. At least one (1) week prior to the start of construction, the contractor shall have video recordings taken of the entire project area. This area includes, but is not limited to, the entire length of the wellfield improvement work, and all locations where work may occur on or near private property. Such recordings shall be provided to the Owner and Engineer before the commencement of construction. These recordings shall serve as record of the conditions as they existed prior to the start of the work. They will be used in the event of a dispute that arises from restoration or damage claims from property owners along the project corridor. The contractor shall pay particular attention to existing damage on public and private property near the work area and ensure that these items are documented on the video.

## 3.02 INSPECTIONS

Prior to placing temporary facilities into service, inspect and test each service and arrange for inspections and tests by governing authorities and obtain required certifications and permits for use thereof.

## 3.03 REMOVAL

A. Completely remove temporary materials and equipment when their use is no longer required.

B. Clean and repair damage caused by temporary installations or use of temporary facilities.

C. Restore permanent facilities used for temporary services to specified conditions.

**END OF SECTION**

(This page has been intentionally left blank.)

## SECTION 01 55 26

## TRAFFIC CONTROL

# PART I GENERAL

## 1.01 SECTION INCLUDES

A. Construction parking controls.

B. Flares and lights.

C. Haul routes.

D. Traffic signs and signals.

E. Removal.

F. Detour routes.

## 1.02 RELATED REQUIREMENTS SPECIFIED ELSEWHERE

A. Drawings and general provisions of the Contract, including the General and Supplementary Conditions and Division 1 Specification sections, apply to this section.

B. Section 01 11 00 - Summary of Work

C. Section 01 52 00 – Construction Facilities and Temporary Controls

# PART II PRODUCTS

## 2.01 SIGNS, SIGNALS, AND DEVICES

A. Post Mounted Traffic Control and Informational Signs in accordance with FDOT and MUTCD Standards.

# PART III EXECUTION

## 3.00 GENERAL

A. Coordinate Maintenance of Traffic with Palm Beach County or other entity having jurisdiction. To the greatest extent practical, vehicular and pedestrian traffic is to be maintained to the existing residences.

B. Contractor shall provide temporary means of egress by means of boardwalks, temporary sidewalks or other approved equivalent systems to allow access to residences and businesses at all times.

C. Emergency vehicle access to the residences shall be provided at all times.

## 3.01 CONSTRUCTION PARKING CONTROL

A. Control vehicular parking to prevent interference with public traffic and parking, private property, business, and residential access.

B. Monitor parking of construction personnel's vehicles. Maintain vehicular access to private residences and businesses.

## 3.02 FLAG PERSONS

A. Provide trained and equipped flag persons to regulate traffic when construction operations or traffic encroach on public traffic lanes.

## 3.03 FLARES AND LIGHTS

A. Use flares and lights during hours of low visibility to delineate project limits.

## 3.04 HAUL ROUTES

A. Consult with Village of Wellington to establish public thoroughfares to be used for haul routes and site access.

B. Confine construction traffic to designated haul routes.

C. Provide traffic control at critical areas of haul routes to regulate traffic and to minimize interference with public traffic.

## 3.05 TRAFFIC SIGNS AND SIGNALS

A. At approaches to site and on site, install at crossroads, detours, parking areas, and elsewhere as needed to direct construction and affected public traffic.

B. Relocate as Work progresses to maintain effective traffic control.

## 3.06 REMOVAL

A. Remove equipment and devices when no longer required.

B. Repair damage caused by installation.

**END OF SECTION**

(This page has been intentionally left blank.)

## SECTION 32 93 00

## SODDING

## PART I GENERAL

### 1.01 DESCRIPTION OF WORK

The CONTRACTOR shall furnish all labor, equipment, and materials necessary for grassing all areas disturbed by his operations and any other areas on the plans indicated to receive grassing. It is the intent of this specification that damaged areas are to be replaced in kind, with sod to be used for all maintained yard areas. ENGINEER shall also designate the type of sod to be used in each area. CONTRACTOR shall take all steps practical to minimize the area required to be sodded. All grassing shall be in accordance with Section 570-1 through 570-9 of the FDOT Standard Specifications for Road and Bridge Construction (current edition), except as modified herein.

### 1.02 STORAGE OF MATERIALS

The CONTRACTOR shall provide space for storage of sod prior to placement in a manner that will not endanger or restrict pedestrian or vehicular traffic or interfere with other aspects of the work.

## PART II PRODUCTS

### 2.01 SOD

A. Types: Sod shall be St. Augustine Floratam, Argentine Bahia, Centipede, or Bermuda, depending on type of existing sod in adjacent area to be matched. Sod shall be well matted with roots. Where sodding will adjoin, or be in sufficiently close proximity to private lawns, types of sod other than those listed above may be used if desired by the affected property OWNERs and approved by the ENGINEER. Sod shall be delivered in commercial-size rectangles, preferably 12-inch by 24-inch or larger.

B. Condition: The sod shall be sufficiently thick to secure a dense stand of live grass. The sod shall be live, fresh, and uninjured at the time of planting. It shall have a soil mat of sufficient thickness adhering firmly to the roots to withstand all necessary handling. It shall be reasonably free of weeds and other grasses. It shall be planted as soon as possible after being dug and shall be kept moist from the time it is planted.

## 2.02 MULCH

The mulch material used shall normally be dry mulch. Dry mulch shall be straw or hay, consisting of oat, rye, of wheat straw, or of pangola, peanut, coastal Bermuda, or Bahia grass hay. Only deteriorated mulch which can readily be cut into the soil shall be used.

## 2.03 GRASSING EQUIPMENT

A. Equipment for Cutting Mulch into Soil: The mulching equipment shall be of a type capable of cutting the specified materials uniformly into the soil, and to the required depth. Harrows will not be allowed.

B. Rollers: A cultipacker, traffic roller, or other suitable equipment will be required for rolling the grassed areas.

# PART III EXECUTION

## 3.01 GENERAL CONSTRUCTION METHODS

Mulching operations will not be permitted when wind velocities exceed 15 miles per hour. Whenever a suitable length of right-of-way or adjacent area has been graded, it shall be made ready, when directed by the ENGINEER, and grassed in accordance with these specifications. Grassing shall be incorporated into the project at the earliest practical time.

## 3.02 SODDING

A. Preparation of Area to be Sodded: The ground which is to receive sod shall have been graded to proper elevations (2" below sodded grade) to match pre-construction conditions or proposed grades. All disturbed swales and ditches shall have been restored to their pre-construction condition or better. The pre-construction grade shall be maintained and the prepared soil shall be loose and reasonable smooth. It shall be reasonably free of large clods, roots, patches of existing grass, and other material which will interfere with the sod-laying operations or subsequent mowing and maintenance operations.

B. Laying of Sod: Sod shall be installed in all areas so designated by ENGINEER. Sod shall be carefully placed so that each piece abuts flush to all surrounding sod, regardless of whether surrounding sod is new or existing. Where new sod is to be placed adjacent to existing sod, the new sod must be cut in to match the elevation of the existing sod. Uneven sod which might cause mowing problems will be rejected. New sod laid on top of existing sod will also be rejected. All sod placed on steep slopes (greater than 1:1) shall be pinned with a wooden pin to keep it in place.

C. Rolling: Immediately after completion of the sod laying, the entire sodded area shall be rolled thoroughly with the equipment specified. At least two trips over the entire area will be required.

D. Watering: Newly-sodded areas are to be watered by CONTRACTOR as necessary to keep sod alive until the Contract is closed out. Dead sod shall be replaced by CONTRACTOR prior to contract closeout.

## 3.03 MULCHING

A. Sequence of Operations: The operations involved in the work shall proceed in the following sequence: preparation of the ground and cutting in mulch.

B. Preparation of Area to be Mulched: The ground over which the mulch is to be laid shall be prepared by disk-harrowing and thoroughly pulverizing the soil to a suitable depth. The prepared soil shall be loose and reasonably smooth. It shall be reasonably free of large clods, roots, and other material which will interfere with the work or subsequent mowing and maintenance operations.

C. Mulching: When mulching is called for, approximately two inches, loose thickness, of the mulch material shall then be applied uniformly over the area, and the mulch material cut into the soil with the equipment specified, so as to produce a loose mulched thickness of three to four inches. Care shall be exercised that the materials are not cut too deeply into the soil. No artificial watering of the mulch shall be done before it is applied.

D. Rolling: Immediately after completion of the mulching, the entire grassed or mulched area shall be rolled thoroughly with the equipment specified. At least two trips over the entire area will be required.

E. Operations on Steep Slopes: On steep slopes when mulching is called for, the mulch material may be anchored down in lieu of being cut into the soil by use of a machine. Anchoring may be done by either of the following methods:

1. Placing a layer of soil, approximately two inches thick by nine inches wide, along the upper limits of the mulch, and spotting soil piles over the rest of the area at a maximum spacing of four feet.
2. Spreading a string net over the mulch, using stakes driven flush with the top of the mulch, at six-foot centers, and stringing parallel and perpendicular, with diagonals in both directions.

F. Maintenance: The CONTRACTOR shall, at his expense, maintain the planted areas in a satisfactory condition until final acceptance of the project.

Such maintenance shall include the filling, leveling, and repairing of any washed or eroded areas, as may be necessary. The ENGINEER, at any time, may require replanting of any areas in which the establishment of the grass stand does not appear to be developing satisfactorily. If a planted area must be replanted due to the CONTRACTOR's negligence, carelessness, or failure to provide routine maintenance of such areas, such replacement shall be at the CONTRACTOR's expense. If replanting is necessary due to factors determined to be beyond the control of the CONTRACTOR, payment for replacement will be made under the appropriate contract pay items.

**END OF SECTION**

## SECTION 33 21 20

## WELL DRILLING

## PART I GENERAL

### 1.01 SCOPE OF WORK

This section covers the work, materials, and equipment necessary for drilling the borehole for the well(s).

### 1.02 SUBMITTALS

A. A list of all drilling additives intended for use on this project shall be submitted to the ENGINEER prior to drilling activities.

B. A list of drilling equipment to be used on this project shall be submitted to the ENGINEER prior to mobilization, including drill bit diameters and dimensions of staged bit assemblies proposed for drilling. Alternative methods for cleaning of the borehole to total depth may be submitted to the ENGINEER by the CONTRACTOR.

C. If applicable, overdrill plan must be submitted for prior approval by the ENGINEER.

D. Drilling fluid solids management system specifications, joint compound, mud pump type and pump curve, and anticipated up-hole velocities during drilling shall also be submitted to the ENGINEER prior to mobilization.

E. Submit to ENGINEER vibration and sound compliance plans for approval prior to mobilization.

F. All chemicals, fluids, and additives introduced into the well shall be NSF certified and shall be applied and used as recommended by the manufacturer for water well use.

## PART II PRODUCTS

### 2.01 EQUIPMENT

A. All equipment shall be in good working condition and suitable for the proposed work. Prior to mobilization, a list of drilling equipment to be used on the project is to be submitted to the ENGINEER. The CONTRACTOR shall provide assurances that he has the proper equipment to adequately complete the project in a timely and safe manner and overcome possible complications encountered during well construction.

B. The OWNER shall reserve the right to inspect the equipment of each CONTRACTOR submitting a bid as a part of the evaluation of bids.

C. The CONTRACTOR shall provide all tools, bits, and all other necessary equipment for drilling.

D. The CONTRACTOR shall use a drilling rig having a hook load capacity of no less than 70,000 pounds to perform the scope of work contemplated herein.

E. Drilling equipment shall be capable of performing mud rotary, reverse air and reverse mud drilling methods within the established time of construction.

F. During drilling within any PVC casing, the CONTRACTOR shall fit rubber protective bumpers to each drill pipe within the casing. The bumpers shall be located adjacent to tool joints.

G. All equipment shall be in accordance with local noise ordinances and OWNER'S requirements for the applicable working hours. The CONTRACTOR shall be required to keep within noise requirements during all phases of the work. This shall include use of hospital-grade mufflers on equipment (as appropriate) to comply. Noise abatement may require acoustical sound barrier walls, enclosures, or other means to minimize noise. Noise control and compliance are the sole responsibility of the CONTRACTOR.

H. The CONTRACTOR shall take special precautions to reduce to a minimum the nuisances and damage to property. Any damage to public or private property shall be immediately repaired or paid for by the CONTRACTOR at no expense to the OWNER. Equipment, tools and materials shall be located in places where they shall produce a minimum of nuisance. CONTRACTOR shall take appropriate action to minimize noise, light, vibration and other nuisances caused by the drilling operation. The appropriate warning signs shall be posted on the streets and the appropriate police shall be informed of the location of the construction site.

## 2.02 DRILLING FLUID

The CONTRACTOR shall provide all drilling fluids, water, and additives as required. Any water added to the well shall have a minimum chlorine residual of 50 ppm. All chemicals, fluids, and additives introduced into the wells shall be NSF certified and shall be applied and used as recommended by the manufacturer.

## 2.03 TEST AND SAMPLING EQUIPMENT

A. The CONTRACTOR shall provide equipment for measuring drilling fluid properties including a marsh funnel, viscosimeter, filter press, and a fluid density balance.

B. The CONTRACTOR shall provide sampling bags or containers for collection and storage of formation samples.

# PART III EXECUTION

## 3.01 GENERAL REQUIREMENTS

A. Notify the ENGINEER 7 days prior to drilling and 24 hours prior to all other site work. The construction schedule shall be met based on day work only (M-F, 7 AM – 7 PM) and excludes nights (unless requirements of 3.01 B. are met), weekends, and OWNER and federal holidays.

B. Should the CONTRACTOR desire to carry out work outside of contract working hours, he shall submit written notice to the OWNER/ENGINEER for approval with a minimum of 48 hours for satisfactory arrangements to be made and for inspecting the work in progress. No night work shall be permitted except as specifically authorized by the OWNER or ENGINEER on a case by case basis.

C. The CONTRACTOR shall provide at all times a thoroughly experienced, competent, and SFWMD licensed water well driller during all operations at the drill site. Provide sufficient competent driller's hands during all operations at the drill site. Use of drilling or other equipment without proper onsite supervision is not permitted.

## 3.02 DRILLING/CLEAN OUT OF BOREHOLE

A. Existing estimated borehole depths and diameters for the surficial aquifer production well are depicted on the drawings and in project documents. Borehole diameters are considered nominal dimensions. The CONTRACTOR shall recommend the appropriate bit size for correct drilling/cleaning out of the borehole diameter. Borehole depths provided in the specifications are estimates only: actual depths may vary and shall be determined by the preliminary geophysical logging.

B. Boreholes shall be advanced in such a manner that the drilled hole shall proceed straight and plumb. The drilling rate shall be optimized for cuttings removal with minimal mixing and accurate formation sample collection. Pilot boreholes shall be advanced in 5-foot increments for more accurate sample collection. Cuttings shall be predominantly cleared from the borehole at the

end of each increment (5-foot increments for pilot holes and reverse air drilled holes, 20-foot increments for reamed holes).

C. Boreholes shall be cleared of cuttings and stable to permit subsequent tasks to be completed without impairment.

D. The reaming assembly shall consist of a lead bit with the same outer diameter as the pilot hole and progressively larger diameter bits up to the reamed hole diameter. The reaming assembly should not exceed 2 feet in length below the largest diameter bit.

E. Drilling of the production interval or cleaning out of the borehole will be performed using the reverse air method. When reverse air is not possible, the reverse mud method may be used with prior ENGINEER approval. Boreholes shall be advanced in such a manner that the drilled hole will proceed straight and plumb. Boreholes shall be drilled and conditioned to permit geophysical logging and casing/screen installation. The borehole shall be cleared of cuttings and stable in order to permit subsequent tasks to be completed without impairment.

## 3.03 DRILLING FLUIDS AND SETTLING TANKS

A. Drilling fluids shall not be discharged to the ground surface at the drilling site.

B. All drilling fluid storage tanks shall be above ground. Dug mud pits shall not be permitted during any phase of borehole or pilot hole drilling. Tanks shall be of sufficient length and construction to allow settling or removal of cuttings and prevent their reintroduction to the borehole. A mud system shall be used that includes a vibratory shale shaker and centrifugal desanders. Mud tanks shall be of sufficient length and construction to allow settling or removal of cuttings and prevent their reintroduction to the borehole.

C. Throughout drilling, settled solids shall be physically removed from the settling system to allow for sufficient storage and settling of solids. Drilling mud (if applicable) shall be reconditioned as needed.

D. The CONTRACTOR shall routinely monitor and record drilling fluid properties including mud weight, viscosity, gel strength, pH, and liquid and solids content. Monitoring shall be in accordance with manufacturer's recommendations, the AWWA, and International Association of Drilling Contractors (IADC). The mud and solids management systems used by the CONTRACTOR for this project shall meet the CONTRACTOR'S proposed drilling fluid manufacturer specifications for the intended application.

E. The CONTRACTOR shall provide ample settling tanks at the well site to settle solids prior to discharge. The settling tanks shall be used to reduce turbidity of the discharge so that water discharging to the outfall location

meets the criteria required for discharge to surface water bodies in accordance with SECTION 32 21 27.

F. A pump that is capable of pumping all flow test water shall be fitted between the well and settling tanks. The pump shall be sized such that the rate of the pumped flow is equal or greater to the flow test. If multiple tanks are needed for settlement of solids, then multiple pumps shall be used, as necessary, to move water through the tank system. A pump shall be capable of discharging water from the settling tanks to the outfall location.

## 3.04 ALIGNMENT REQUIREMENTS

A. Pilot holes and reamed holes shall be drilled round and straight throughout.

B. The completed well shall be sufficiently plumb and straight so that there shall be no interference with installation, alignment, operation, or future removal of the permanent well pump.

## 3.05 COMPLIANCE WITH GOVERNMENTAL REGULATIONS

A. Construct the well in strict conformance with all laws, rules, regulations, and standards related to the construction of wells in the State of Florida and local regulatory agencies.

## 3.06 FORMATION SAMPLES

A. One (1) set of representative formation samples shall be collected by the CONTRACTOR at specified intervals from the present total depth of the well to the new total depth. Samples shall be taken at each 5-foot level and each change in formation or material type. The method must yield samples that are representative of the actual depth to which drilling has progressed.

B. Each sample shall be approximately 8 ounces and be placed in a cotton, soil sample bag, Hubco or equivalent, or as approved by ENGINEER. Each sample shall be labeled with the date, well identification, and depth from which the sample was taken clearly marked on the container in indelible ink. The CONTRACTOR shall store and protect the samples from damage or disturbance until they have been released to and accepted by the ENGINEER.

## 3.07 WATER SAMPLES

A. The CONTRACTOR shall supply new 500 mL HDPE sample bottles and collect water samples during reverse air drilling. A fixed, safe, accessible location to collect samples must be provided to the satisfaction of the ENGINEER. Samples shall be collected from the point of discharge at every

ten foot interval. Sample bottles shall be labeled with well number, depth, date, and time collected.

B. The CONTRACTOR shall prevent additives during the drilling process from affecting water samples collected from the reverse air discharge point.

C. The water column in the well shall be periodically purged to obtain representative water samples. The ENGINEER shall determine when the well is to be purged.

## 3.08 DRILLING LOGS

A. Prepare a daily drilling log for inspection and submittal to the ENGINEER. Include in the log the depths and type of geologic formation encountered; drilling penetration rate, in minutes, for each 5-foot interval; general formation hardness based on drilling; type of drilling, chemical, water and mud additives; loss of circulation zones; additives to the well to control flow; water added to supplement reverse air drilling; problems during drilling; date, time, and depth for each entry. The log shall be kept current with a copy located at the drill site. The CONTRACTOR shall maintain an up-to-date drill string tally that shall be available for inspection by the ENGINEER.

B. A final well log shall be prepared that includes copies of the above. An as-built drawing of the well shall be submitted showing casing and borehole dimensions and details.

C. Submittals shall be made as required to the appropriate regulatory agencies per the applicable local, state and federal regulations. The CONTRACTOR shall provide copies of all submittals to the ENGINEER.

## 3.09 WASTE DISPOSAL

A. All solid and liquid waste, including but not limited to drilled solids, cuttings, drilling mud, drilling additives, spent or unused chemicals and unused products shall be disposed of or recycled by the CONTRACTOR in an environmentally responsible manner and in accordance with applicable regulations. The disposal or recycling location must be identified in a submittal to the ENGINEER. Prior to disposal, the location must be accepted by the ENGINEER. The CONTRACTOR shall prevent wastes from migrating from the designated construction area and cuttings storage area. The CONTRACTOR shall promptly clean up drilling by-products that migrate outside of the designated construction area. Further, the CONTRACTOR shall minimize the spillage of formation water at all times and promptly repair leaks where formation water may be released to the ground surface.

B. Remove from the drilling site all cuttings and other material removed by the drilling operations that are not required to complete the work. Solid material shall be disposed of in accordance with local and state regulations at an approved disposal site, approved by the ENGINEER. Removal of cuttings, mud and formation water from the site is considered incidental to the work and does not constitute additional payment to the CONTRACTOR.

C. Depressions left in the land surface from the cleanup of residues, or for any other reason resulting from the CONTRACTOR'S activities, shall be filled with clean fill material and graded smoothly.

**END OF SECTION**

(This page intentionally left blank.)

## SECTION 33 21 21

## WELL CASING

## PART I GENERAL

### 1.01 SCOPE OF WORK

This section covers the work, equipment and materials necessary for furnishing and installing the well casing(s).

### 1.02 SUBMITTALS

A. Provide manufacturer's specifications and technical data on all casing to be provided for installation in the well(s).

## PART II PRODUCTS

### 2.01 GENERAL REQUIREMENTS

A. All casings shall be approved for use in municipal public supply wells, and to the specifications as outlined. Casing material and dimensions are provided in Section 33 20 00 and illustrated in the project drawings. Surface casings shall be constructed of carbon steel. The CONTRACTOR shall furnish, satisfactorily install and grout each applicable string of casing. The CONTRACTOR shall ensure that when casing is installed to the total required depth it is able to rotate freely without impediment prior to grouting in place. All casings shall be new, unused and in good physical condition. Warped or damaged casing shall be rejected.

B. The Contract provides an estimate of the amount of casing. The OWNER or the ENGINEER shall determine actual lengths based on drilling results. The CONTRACTOR shall be responsible for ensuring that the selected casing shall withstand all stresses of construction without impairment.

C. The CONTRACTOR shall provide the ENGINEER with an inventory of all casing delivered to the site and maintain a tally during installation.

D. Surface casing shall include: 30-inch diameter carbon steel well casing; Production well casings shall include: 24-inch diameter, Schedule 40 PVC intermediate casing; 16-inch diameter, SDR26 CertainTeed Certa-Lok riser casing.

### 2.02 CARBON STEEL CASING

A. All steel casing shall be 30-inch diameter, new and unused carbon steel pipe

that conforms to A139.

B. Steel casing mill certificates shall be submitted to the ENGINEER by the CONTRACTOR prior to delivery of the casing to the site for approval. Casing shall not be approved for installation without mill certification submittal and approval by the ENGINEER.

## 2.03 POLY VINYL CHLORIDE (PVC) CASING

A. The 24-inch diameter PVC casing shall be Schedule 40 or approved equivalent. Any equivalent casing selected must be shown to have sufficient joint and tensile strength, internal pressure rating, resistance to collapse and ability to withstand all stresses of construction. Any alternates must be approved in advance by the ENGINEER.

B. The 16-inch riser PVC casing and couplings shall be SDR26 Certa-Lok by CertainTeed or equivalent. Any equivalent casing selected must be shown to have sufficient joint and tensile strength, internal pressure rating, resistance to collapse and ability to withstand all stresses of construction. Any alternates must be approved in advance by the ENGINEER.

C. All casings shall be clearly marked with type, grade and manufacturer. If required by the ENGINEER, the CONTRACTOR shall provide additional backup supporting documentation from the manufacturer.

D. Casing elevators must be approved by the ENGINEER.

E. Only CertainTeed Certa-Lok splines shall be used with Certa-Lok couplings. The CONTRACTOR shall provide a copy of the installation and connection procedure on site for review prior to casing assembly.

F. Final PVC well casing shall be completed as shown on the drawings.

G. Bills of lading shall be provided for casings delivered for well construction.

## 2.04 CENTERING GUIDES

A. Casing centering guides (centralizers) shall be placed on all casing strings, prior to installation, at 30-foot intervals with the first set of centralizers placed within 5 feet of the bottom of the casing. At the location five feet above the base of the casing, six equally spaced centralizers shall be installed and at all other locations four equally spaced centralizers shall be installed. Centralizers shall be fixed to the casing at coupling locations. If requested by the ENGINEER, an additional centralizer shall be installed 15 feet from the bottom of the casing.

B. Centralizer material shall be steel when attached to carbon steel, and stainless steel when attached to stainless steel, and either stainless steel or other approved material when attached to PVC casing. Guides shall be welded when attached to steel; and steel strapped to PVC.

C. Fixed centering guides shall extend outward from the casing to within 1/2 inch of the maximum drill bit dimension.

D. Uppermost centering guides for the final PVC casing shall be installed at a minimum of 15 feet below finished grade.

## PART III EXECUTION

### 3.01 GENERAL

A. Casings shall be installed as described in the specifications and drawings. Actual casing depths shall be determined by the ENGINEER.

B. The casing installation method shall be approved in advance by the ENGINEER and be consistent with manufacturer specifications.

C. Casing failure by any means including, but not limited to, any collapse, breakage, separation, dents, tears or rips during construction that in any way impairs the use of the well in the opinion of the ENGINEER, shall be repaired or replaced at the CONTRACTOR'S sole expense.

D. Casing connections shall meet manufacturer specifications for water tightness. Connections shall have equal strength to the casing itself.

E. All steel and stainless-steel casings shall have machine cut beveled ends and shall be arc welded together according to the standards of the American Welding Society. Welded casings shall be straight and true of alignment to the satisfaction of the ENGINEER.

F. Final PVC well casing shall be set at one foot above 100-year flood elevation in accordance with project drawings and to facilitate final wellhead installation.

### 3.02 WELDING

A. General: The standards of the American Welding Society and Structural Welding Code (AWS D1.1) shall apply for all welded joint casing and accessories. All welds shall conform to the latest revision of ANSI B31.1.

B. Certification: All welded casing joints shall be made by welders certified in the State of Florida. The certified welder shall perform and be responsible for the

integrity of all steel casing welds. The CONTRACTOR must provide the ENGINEER proof of welders' certifications 72 hours before any welding is performed.

C. Surface Preparation: Any surface defects that shall affect the weld shall be chipped or ground out. A power-driven wire brush shall be used to thoroughly clean each layer of weld prior to each additional weld metal, including the final pass.

D. Passes: There shall be a minimum of three (3) weld passes on pipe sizes 6-inches and greater.

E. Cooling Time: Welded joints shall be allowed to cool for not less than 30 minutes before the weld is placed in contact with water or until the welded joint reaches a temperature equal to or less than 400 degrees Fahrenheit.

F. Weld Reinforcement: Weld reinforcement shall be as specified by the AWS code. Upon completion of welding, all weld splatter, flux, slag, and burrs left by attachments shall be removed. Welds shall be repaired to produce a workmanlike appearance, with uniform weld contours and dimensions.

G. Field Joints: All field joints shall be welded during installation by qualified welders in accordance with the requirements of AWWA C206.

**END OF SECTION**

## SECTION 33 21 22

## ANNULAR GROUT

# PART I GENERAL

### 1.01 SCOPE OF WORK

A. This section covers the labor, equipment and materials required to furnish and install the annular grout.

### 1.02 SUBMITTALS

A. Provide data on all proposed additives and manufacturer's specifications.

B. Provide bulk cement unit weight tickets for verification of cement quantities pumped.

C. Prior to each cement stage the CONTRACTOR shall submit a plan including anticipated theoretical lift for the specific cement stage. If theoretical lift differs from actual lift by greater than 40%, the CONTRACTOR shall immediately provide alternative means of verifying the cement grout is uniform and continuous prior to continuing subsequent stages of grout. This verification shall be performed at the CONTRACTOR'S expense and shall be performed in a timely manner so as not to hinder successful grouting of subsequent stages.

D. During cementing, provide cement slurry weight data for each grouting stage. A fixed, safe, accessible location to collect samples must be provided to the satisfaction of the ENGINEER. Samples of the cement slurry shall be collected, weighed and recorded by the CONTRACTOR in sight of the ENGINEER. If performed in batches, provide slurry weight and collect sample for each batch mixed. If performed in continuous mixing, provide slurry weights and collect samples at the beginning, middle, and end of pumping for each grouting stage.

# PART II PRODUCTS

### 2.01 GENERAL REQUIREMENTS

A. The CONTRACTOR shall furnish and install all grout and additives as specified.

B. Cement and dry additives shall be delivered to the site in their dry state and mixed with water on site.

C. The use of ready-mix grout, mixed with water prior to delivery to the site, will be permitted; however, the CONTRACTOR must ensure that all delivered grout meets the criteria listed below and outlined in this Section. Any delivered ready-mix grout that does not meet the criteria will be rejected at the CONTRACTOR'S cost.

- Grout temperature shall be read and recorded prior to pumping downhole using equipment provided by the CONTRACTOR and viewed in the field by the ENGINEER. Acceptable grout temperature shall be in accordance with Specification for Hot Weather Concreting (ACI 305), including, but not limited to, a maximum temperature of ready mixed grout of no more than 95 degrees Fahrenheit, unless otherwise specified by the ENGINEER;
- Slurry weight of ready mixed grout shall be measured prior to pumping downhole using equipment provided by the CONTRACTOR and viewed in the field by the ENGINEER;
- Ready mixed grout slurry shall be free of grout stones (improperly mixed grout) and other foreign materials.

## 2.02 PORTLAND CEMENT

A. Cement grout shall be API class B Portland cement and conform to ASTM C150, Type II standards.

## 2.03 BENTONITE

A. Bentonite furnished for cementing shall be raw bentonite and be added at the bulk facility and thoroughly mixed at the ratio specified. Small batches (less than 50, 94-lb. bags of cement) of grout may be mixed on site. Bentonite-cement mix ratio shall not exceed applicable regulations for cement grout.

B. If the CONTRACTOR proposes to mix bentonite with cement on site, all ingredients shall be thoroughly mixed, at the ratio specified, to the satisfaction of the ENGINEER. The CONTRACTOR shall demonstrate the dry mixing method to the ENGINEER prior to mixing the slurry. Following dry mixing, the CONTRACTOR shall mix a slurry sample for measurement and provide a method of measurement to determine the weight in pounds per gallon of cement slurry to confirm proper mix ratios. Bentonite-cement mix ratio shall not exceed applicable regulations for cement grout.

## PART III EXECUTION

### 3.01 GROUTING

A. The CONTRACTOR is solely responsible for the successful execution of grouting. Annular grout shall be in conformance with all applicable local and state regulations.

B. The CONTRACTOR shall sufficiently circulate the annulus between the casing and borehole prior to grouting to ensure borehole fluids are properly conditioned to minimize channeling and non-uniform grouting.

C. The CONTRACTOR is solely responsible for defects in the grout or grouted interval. The CONTRACTOR shall take all precautions to protect the casing from collapse or damage during grouting. Any defects in the grout job or casing damage resulting from grouting shall be corrected by the CONTRACTOR at his own expense.

D. The CONTRACTOR shall provide 24-hour notice prior to each stage of cementing of the well to enable the ENGINEER to observe all cementing operations.

E. Provide a method of measurement to determine the weight in pounds per gallon of cement slurry to confirm proper mix ratios. Samples of the cement slurry shall be collected, weighed and recorded by the CONTRACTOR in sight of the ENGINEER. The correct mix ratios shall be maintained. If performed in batches, provide slurry weight and collect samples for each batch mixed. If performed in continuous mixing, provide slurry weights and collect samples at the beginning, middle and end of pumping for each grout stage. The CONTRACTOR shall provide a fixed, safe, accessible location for the ENGINEER to view and/or collect grout samples during the cementing process.

F. If grouting is to be conducted in stages, the top of the hardened grout from the previous grouting stage shall be measured in the presence of the ENGINEER prior to each cementing stage. Each cementing stage shall be given 12 hours of curing time prior to resuming cementing. It is the responsibility of the CONTRACTOR to determine the collapse strength of the casing and the appropriate amount of grout for each grouting stage. Cementing calculations shall be reviewed with the ENGINEER in advance of each grouting stage. Grout shall be allowed to cure for 48 hours before continuation of drilling operations.

G. The grout mixture for the initial grouting stage after each casing installation shall be API Class B neat Portland cement mixed with no more than 5.5 gallons of water per sack of cement, with a minimum 14.8

lbs/gallon. At a minimum, the neat cement mixture shall be used to grout the lower 40 linear feet of casing. Additional grouting stages after casing installation above the initial grouting stage shall be API Class B Portland cement mixed with up to 6% bentonite and no more than 9 gallons of water per sack of cement as approved by the ENGINEER. Only potable water shall be used for the grout mix.

H. CONTRACTOR is solely responsible for the proper grouting of all casings in accordance with all applicable AWWA, SFWMD, FDEP and HD standards.

## 3.02 SETTING TIME

A. The cement must be allowed to cure 12 hours between cementing stages.

B. The final cement stage shall have a minimum 48 hours to cure before continuation of drilling operations.

**END OF SECTION**

## SECTION 33 21 23

## WELL SCREEN AND GRAVEL PACK

# PART I GENERAL

### 1.01 SCOPE OF WORK

This section covers the work, equipment, and materials necessary for furnishing and installing the well screen and gravel pack.

### 1.02 SUBMITTALS

A. Provide data on all proposed additives and manufacturer's specifications.

B. Provide manufacturer's specifications and technical data on all screens and gravel to be provided for well construction.

C. Prior to mobilization, the CONTRACTOR shall provide a manufacturer grain size distribution cutsheet for anticipated gravel pack and a 16-ounce sample for ENGINEER review and approval. Throughout well construction and development, when new gravel shipments are required, the CONTRACTOR shall submit updated manufacturer grain size distribution cutsheets for review prior to installation in the well(s).

D. Provide shop drawings showing screen/PVC casing transition coupling.

# PART II PRODUCTS

### 2.01 GENERAL REQUIREMENTS

A. All screens shall be approved for use in municipal public supply wells and to the specifications as outlined. The CONTRACTOR shall furnish, satisfactorily install, and gravel pack each string of well screen and riser casing. All screens, riser casings, couplings, and adapters shall be new, unused, in good physical condition, and delivered to the site in the original protective wood crates as provided by the manufacturer. Warped or damaged materials shall be rejected.

B. The well screen to be used in the construction of the production well shall be 10-inch or 12-inch diameter, continuous slot, type 316 stainless-steel well screens, of V-slot design, as manufactured by Johnson Well Screens, Inc., or ENGINEER approved equal. Screen sections shall be joined by welding or by threaded and coupled connections. If welded, the weld shall not decrease the corrosion resistance of the screen.

C. The screen slot size shall be determined by the ENGINEER. Blank sections within the screened interval shall be "tight wound" type 316 stainless steel screen having less than 0.001-inch slot openings.

D. The Bidding Documents indicate an estimate of the screen length. Actual lengths shall be determined by the ENGINEER.

E. The bottom of the screen shall be fitted with a matching diameter, 316 stainless steel flat plate welded to the screen.

## 2.02 RISER CASING

A. Riser casing shall consist of 10-inch diameter (10.750" O.D.) or 12-inch diameter (12.750" O.D.) SDR17 CertainTeed CertaLok PVC casing. For estimation purposes, the riser interval is shown on the project drawings; however, the amount of riser required may change based on the results of drilling. The riser shall be continuous from the top of the screen to land surface or as determined by the ENGINEER.

B. The riser casing shall be securely connected to the stainless-steel screen by a method approved by the screen manufacturer and the ENGINEER. The CONTRACTOR is responsible for the intact placement of the screen and riser pipe to the depth specified by the ENGINEER.

## 2.03 CENTERING GUIDES

A. Casing centering guides (centralizers) shall be placed on the screen/riser string, prior to installation, with the first set of centralizers placed within 5 feet of the bottom of the screen, second set of centralizers placed 5 feet above the screen/riser transition, and at 30-foot intervals above. Centralizers shall be fixed to the casing at weld ring or coupling locations. Centralizers shall be aligned so that they do not interfere with the installation of gravel and gravel installation tubing.

B. Centralizer material shall be stainless steel when attached to stainless steel, and either stainless steel, or approved alternative, when attached to PVC. Guides shall be welded when attached to steel and screw attached using ¼-inch screws or lags that penetrate not more than 80 percent of the coupling and casing when attached to PVC. Any casing penetrated shall be rejected and shall be replaced at the CONTRACTOR'S expense.

C. Centralizer material shall be non-ferrous and shall not be attached by drilling into the casing. No ferrous materials shall be used for attachment.

## 2.04 GRAVEL PACK MATERIAL

A. Gravel pack material shall be composed of a minimum of 95% silica, and sorted and graded so that there is minimum 90% retention on the well screen installed. Gravel pack supplier location of the gravel shall be within the State of Florida. Gravel pack grain size distribution data and a 16-ounce sample must be provided for approval by the ENGINEER.

# PART III EXECUTION

## 3.01 GENERAL

A. Screens and casing risers shall be installed as described in the specifications and drawings. Actual casing depths shall be determined by the ENGINEER.

B. The screen assembly and installation method shall be approved in advance by the ENGINEER and be consistent with manufacturer specifications.

C. Gravel pack shall be installed in a water slurry by the tremie method. The base of the tremie pipe shall be placed at the gravel placement depth and be moved upward consistent with the gravel fill depth. The gravel pack shall be carefully installed to ensure complete filling of the annular space from the bottom of the hole to a minimum of 20 feet above the base of the outer casing or as specified by the ENGINEER. During gravel placement, the free fall distance between the gravel in place and the lower end of the construction tremie shall not exceed 20 feet.

D. Water required for the construction of the well shall be clean, potable and meet primary and secondary drinking water standards pursuant to Chapter 62-550 Florida Administrative Code.

E. After gravel placement, additional gravel may be required during development or other well construction procedures. Placement of additional gravel shall be performed as outlined above until no further measurable settlement of the gravel pack or as determined by the ENGINEER.

F. Screen or casing failure by any means, including but not limited to collapse, breakage, separation, dents, tears or rips during construction that in any way impair the use of the well in the opinion of the ENGINEER, shall be repaired or replaced at the CONTRACTOR'S sole expense.

G. Casing connections shall meet manufacturer specifications for water tightness. Connections shall have equal or greater strength as the casing itself.

**END OF SECTION**

(This page intentionally left blank.)

## SECTION 33 21 24

## BOREHOLE GEOPHYSICAL AND VIDEO LOGGING

## PART I GENERAL

### 1.01 SCOPE OF WORK

A. This section covers the equipment, work, and materials necessary to perform geophysical logging of the wells.

B. Provide the following geophysical logging and well survey equipment:

1. Static and Dynamic Flow log
2. XY Caliper log
3. Gamma Ray log
4. Static and Dynamic Well Video log
5. Dual Induction log

## PART II PRODUCTS (NOT USED)

## PART III EXECUTION

### 3.01 GENERAL

A. All logging shall be supervised by the ENGINEER with 24 hours advanced notice. The CONTRACTOR is responsible to ensure that logs are complete and include the entire borehole and cased intervals as directed by the ENGINEER. Logging should be done as soon as possible after the drilling tools have been removed from the logged interval.

B. When the hole has been drilled to a depth determined by the ENGINEER, it must be prepared for geophysical logging. Borehole preparation shall include but not be limited to the following activities: i) continuation of drilling fluid circulation until drill cuttings have been removed from the borehole and the fluid is uniform in the borehole; or ii) reverse air pumping until the discharge water is free of cuttings and suspended sediment. The CONTRACTOR must make all reasonable efforts to leave the borehole free from obstructions in preparation for geophysical logging. Logging must be done immediately following the completion of borehole preparation unless otherwise stated in the Contract or as stipulated by the ENGINEER.

C. Each log must be run and recorded in a continuous fashion to qualify as an acceptable log.

D. Any obstructions or fill material or borehole of reduced diameter more than 1/2-inch in the borehole or cased intervals shall be removed or reamed by the CONTRACTOR at his own expense.

E. All logs shall include a repeat section of not less than 50 feet of the portion of the hole. The ENGINEER will determine the repeat section.

F. All logs shall be appropriately labeled with all appropriate information. Two (2) field copies shall be made available to the ENGINEER upon completion. Five (5) hard and five (5) electronic copies of finished logs including LAS and PDF files are to be provided by the CONTRACTOR within two weeks of logging. The CONTRACTOR shall furnish three (3) copies of each video to the OWNER.

G. A down hole video log in DVD format shall be conducted to inspect the casing and screened interval of the well prior to demobilizing the drilling rig. The video shall be conducted in the presence of the ENGINEER. The video camera lens shall be color and capable of 360-degree movement; be controlled by the logging technician; be independent of the camera body; and have focus capability. The video camera shall be centralized in the borehole. The centralizers shall self-adjust to different casing and hole sizes as necessary. If the ENGINEER determines that the video is unacceptable due to poor quality, the CONTRACTOR at his expense shall obtain the necessary equipment to perform additional logging to the satisfaction of the ENGINEER.

H. Video logging shall be conducted under both static and pumping conditions at the direction of the ENGINEER. The CONTRACTOR shall ensure that the well is pumped sufficiently to ensure adequate visibility for the video survey as determined by the ENGINEER. The CONTRACTOR shall use a submersible pump capable of 50% well design rate as determined by the ENGINEER.

I. During final video logging, total depth of the well shall be recorded and compared with reported total depth. If fill is present, the CONTRACTOR, shall remove following well video. Removal of fill shall be performed at the CONTRACTOR'S expense.

**END OF SECTION**

## SECTION 33 21 25

## WELL DEVELOPMENT

# PART I GENERAL

### 1.01 SCOPE OF WORK

A. This section covers the labor, equipment, and materials required to develop the well(s). Development shall include surging/sustained rate pumping at rates up to 2,000 gpm or as directed by the ENGINEER.

B. Under no circumstances shall the pumping equipment create a vacuum within the well casing.

C. The CONTRACTOR shall manage discharge water as described below and in Section 33 21 27.

### 1.02 SUBMITTALS

A. The CONTRACTOR shall furnish the ENGINEER with a calibrated flow meter with certification no older than 60 days prior to the notice to proceed and attest to an accuracy of 95 percent or greater for the range of the meter.

B. The CONTRACTOR shall furnish the ENGINEER with manufacturer specifications for all chemical additives proposed for development.

C. The CONTRACTOR shall furnish the ENGINEER with manufacturer specifications for generators, pumps, and corresponding silencers.

D. The CONTRACTOR shall submit to the ENGINEER, prior to installation of the development pump, a manufacturer pump curve for development.

E. The CONTRACTOR shall submit to the ENGINEER a shop drawing depicting a schematic plan with equipment and piping for formation water disposal.

F. Daily development summary logs must be completed daily by the CONTRACTOR and submitted to the ENGINEER, as requested. Blank daily development forms can be found at the end of this section.

G. Completed daily development logs shall be submitted weekly to the ENGINEER.

## PART II PRODUCTS

### 2.01 DEVELOPMENT EQUIPMENT

A. Provide all pumps, motors, air compressors, and other ancillary equipment needed to develop the well to the extent that, as practical, suspended solids are removed from the borehole. Provide all pipe, fittings, and valves required to transmit discharge water from the pump to the settling tanks as required in SECTION 32 21 27.

B. The test pumping equipment shall have access ports, water level measurement setup, and discharge piping as required in SECTION 33 21 26.

C. The CONTRACTOR shall provide a calibrated flow meter near the pump. The flow meter shall be accurate and precise within the range of 200 gpm to 2,000 gpm. The placement of the flow meter shall be in accordance with manufacturer recommendations for flow meter placement. The CONTRACTOR shall also consult the ENGINEER for optimal flow meter placement. Air release valves shall be provided and installed by the CONTRACTOR at as many locations as required. Air release valves shall consist of tapping the discharge pipe and providing and installing a 2-inch diameter riser and gate valve. The CONTRACTOR shall supply an orifice weir to verify pumping rates.

D. The development equipment must be able to divert the flow of water in a controlled manner to minimize flooding and erosion. Discharge water shall be clear and free of suspended solids. Discharge water shall be retained temporarily using a settling tank for settlement of solids and pumped via temporary piping to the discharge point as directed by the ENGINEER. Tanks required for settling of solids and additional pumps and temporary piping needed to transmit water to the discharge point shall be included in the unit cost for development. Management and removal of development solids shall be included in the unit cost for development.

## PART III EXECUTION

### 3.01 AIRLIFT AND JETTING WITH SIMULANTEOUS AIRLIFT WELL DEVELOPMENT

A. Develop the well using compressed air lift at a minimum air flow rate of 650 cubic feet per minute. The base of the air discharge shall be set at the base of the screen during the initial development period. This step shall be considered initial development to remove the majority of drilling fluid from the borehole and to confirm the stability of the gravel pack. Air development shall include varying the depth of air discharge and periodically surging the well with the use of a surge tank. The top of the gravel pack shall be

continuously monitored during air lift. If the top of the gravel pack is below the top of the desired level, then gravel must be added.

B. Following initial development, high velocity jetting shall be done using a solution of Bentonite Mud Remover (BMR) and/or chlorinated water for a period of time to be determined by the ENGINEER. A high velocity jetting tool having 4 nozzles shall be rotated and moved vertically throughout the entire screened portion of the well while chlorinated water is forced through the screen and into the gravel pack. The jetting tool and pumping equipment shall deliver a minimum total flow rate of 500 gpm. Alternate nozzle sizes and flow rates may be proposed; however, a minimum jetting velocity of 50 feet per second shall be maintained. Maximum jetting velocity must be reviewed by engineer for approval. Pumps used for jetting shall be at the surface with measured output flow rate to the jet tool. The initial phase of jetting shall be done using a solution of BMR and chlorinated water having a minimum chlorine concentration of 50 milligrams per liter (mg/L). The initial jetting phase shall be not less than 8 hours. Thereafter, fresh water may be used for jetting development. At the direction of the ENGINEER, accumulating sand in the screen shall be removed by lowering the air lift set to the bottom of the well. After thoroughly jetting and surging the well with the jetting tool, well development shall be performed using air lift at the base of the screen or directed by the ENGINEER.

C. Alternative methods of development may be submitted by the CONTRACTOR prior to implementation for ENGINEER review.

## 3.02 SURGE PUMPING

A. Using the test pump setup described in SECTION 33 21 26, the CONTRACTOR shall pump surge the well until the discharge water is free of suspended material. The CONTRACTOR shall install a pump in the well capable of pumping steadily and in surges up to 2,000 gpm from the well through the Formation Water Disposal System. The CONTRACTOR shall surge the well frequently and be able to sustain a steady high flow rate as directed by the ENGINEER.

B. The CONTRACTOR shall assist the ENGINEER with any connections required to connect the ENGINEER'S provided silt density index (SDI) testing equipment to the pump discharge. The CONTRACTOR shall provide, operate and maintain a clean auxiliary pump capable of maintaining 35 pounds per square inch (psi) for SDI testing. The auxiliary pump shall be plumbed to the well discharge for sampling and testing. The CONTRACTOR shall provide fittings and fabricate connections as needed to enable the ENGINEER to perform the SDI tests.

C. The CONTRACTOR shall measure static water level in the well prior to the

start of development each day. Additionally, CONTRACTOR shall perform a specific capacity test daily, which shall include measurement of flow rate and simultaneous measurement of water level in the well. The pump shall be capable of a minimum discharge rate of 100 gpm with a minimum drawdown of 30 feet below the pump level.

D. CONTRACTOR shall complete daily development summary forms provided by the ENGINEER, including daily static water level measurements, specific capacity measurements, and sand (Rossum) tests.

E. Throughout development and at completion of development, as directed by and in the presence of the ENGINEER, the CONTRACTOR shall measure the total depth of the well. If significant in-filling has occurred, as determined by the ENGINEER, the CONTRACTOR shall proceed to clean out the borehole to the original total depth.

## 3.03 DISCHARGE WATER

A. Discharge water generated during construction activities shall be discharged to the CONTRACTOR'S formation water disposal system and subsequently to the designated outfall location. Settling and treatment of formation water to be discharged is the CONTRACTOR'S responsibility and shall be in accordance with all applicable regulations and SECTION 32 21 27. The CONTRACTOR shall set up and maintain discharge water transmission piping, as required in SECTION 32 21 27. Discharge water shall always be contained and under control by the CONTRACTOR.

B. The CONTRACTOR is solely responsible, by any and all methods necessary, to meet the requirements for discharge of water. If the CONTRACTOR fails to fulfill proper requirements of discharge water, the CONTRACTOR is responsible for complete restoration of the discharge location to the original condition at no cost to the OWNER.

**END OF SECTION**

## DAILY AIRLIFT DEVELOPMENT LOG

### GENERAL INFORMATION

WELL OWNER:_____ WELL NAME:_____ WELLFIELD:_____

DATE:_____ TIME ONSITE:_____ TIME OFFSITE:_____ DEVELOPMENT HOURS (TOTAL FOR DAY):_____

CONTRACTOR:_____ SUPERVISOR:_____

COMMENTS:_____

### WELL DETAILS

TOTAL DEPTH OF WELL (FT):_____BLS/BTOC (circle one) DIAMETER OF BOREHOLE (IN):_____

CASING I.D. (IN):_____ SCREEN I.D. (IN):_____

DEPTH TO BOTTOM OF CASING (FT):_____BLS/BTOC (circle one)

### DEVELOPMENT EQUIPMENT DATA

MANUFACTURER:_____ COMPRESSOR SIZE:_____ PSI:_____

AIRLINE DIAMETER (O.D. & I.D.):_____ AIRLINE SETTING DEPTH (FT):_____BLS/BTOC (circle one)

### DAILY READINGS

STATIC WATER LEVEL:_____BLS/BTOC (circle one) @ _____(TIME)

GRAVEL PACK LEVEL (FT):_____BLS/BTOC (circle one) @ Start of day_____(TIME)

GRAVEL PACK LEVEL (FT):_____BLS/BTOC (circle one) @ End of day_____(TIME)

*Specific Capacity*

RATE (GPM):_____ PUMPING WATER LEVEL (FT):_____BLS/BTOC (circle one) SPECIFIC CAPACITY (GPM/FT):_____

### DEVELOPMENT RECORD

| START SURGE (TIME) | STOP SURGE (TIME) | INITIAL SAND IN IMHOFF (ML) | FINAL SAND IN IMHOFF (ML) | ADDITIONAL NOTES |
|---|---|---|---|---|
| | | | | |
| | | | | |
| | | | | |
| | | | | |
| | | | | |
| | | | | |
| | | | | |
| | | | | |
| | | | | |
| | | | | |
| | | | | |
| | | | | |
| | | | | |
| | | | | |
| | | | | |
| | | | | |
| | | | | |
| | | | | |

## DAILY PUMP DEVELOPMENT LOG

### GENERAL INFORMATION

WELL OWNER:_____ WELL NAME:_____ WELLFIELD:_____

DATE:_____ TIME ONSITE:_____ TIME OFFSITE:_____

CONTRACTOR:_____ SUPERVISOR:_____

COMMENTS:_____

### WELL DETAILS

TOTAL DEPTH OF WELL (FT):_____BLS/BTOC (circle one) DIAMETER OF BOREHOLE (IN):_____

CASING I.D. (IN):_____ SCREEN I.D. (IN):_____

DEPTH TO BOTTOM OF CASING (FT):_____BLS/BTOC (circle one)

### DEVELOPMENT EQUIPMENT DATA

PUMP TYPE: SUBMERSIBLE / CENTRIFUGAL / TURBINE / JET / OTHER_____(circle one) MANUFACTURER:_____

PUMP DIAMETER (IN):_____ PUMP SETTING DEPTH (FT):_____BLS/BTOC (circle one)

### DAILY READINGS

STATIC WATER LEVEL:_____BLS/BTOC (circle one) @ _____(TIME)

GRAVEL PACK LEVEL (FT):_____BLS/BTOC (circle one) @ Start of day_____(TIME)

GRAVEL PACK LEVEL (FT):_____BLS/BTOC (circle one) @ End of day_____(TIME)

START DEVELOPMENT:_____ AM/PM (circle one) STOP DEVELOPMENT:_____AM/PM(circle one)

### DEVELOPMENT RECORD

| START SURGE (TIME) | STOP SURGE (TIME) | ROSSUM SAND TEST | | | PUMPING RATE (GPM) | PUMPING WATER LEVEL (FT) |
|---|---|---|---|---|---|---|
| | | TEST START TIME | TEST DURATION (MIN.) | SAND (MG) | | |
| | | | | | | |
| | | | | | | |
| | | | | | | |
| | | | | | | |
| | | | | | | |
| | | | | | | |
| | | | | | | |
| | | | | | | |
| | | | | | | |
| | | | | | | |
| | | | | | | |
| | | | | | | |
| | | | | | | |
| | | | | | | |
| | | | | | | |
| | | | | | | |
| | | | | | | |
| | | | | | | |

## SECTION 33 21 26

## PUMPING TESTS

# PART I GENERAL

### 1.01 SCOPE OF WORK

A. This section covers the labor, equipment, and materials required to perform pumping tests on the well.

B. The CONTRACTOR shall be responsible for failure of equipment and materials associated with the pumping test and for negligence on the part of the CONTRACTOR. In the event of such failure or negligence that results in necessitating re-running of the pumping test, the CONTRACTOR shall repeat the test at his own expense.

C. Under no circumstances shall the test pumping equipment create a vacuum within the well casing.

D. The CONTRACTOR shall manage discharge water as described below and in SECTION 32 21 27.

### 1.02 SUBMITTALS

A. Provide certificates of calibration for flow meters to be used for flow measurement by the ENGINEER.

B. Submit a pump curve prior to installation for approval by the ENGINEER.

C. Provide manufacturer product data and calibration certificates, for ENGINEER's approval, of all data loggers and transducers used for testing.

D. Submit to the ENGINEER following completion of pump testing recovery, all pressure transducer and data logger data from pump test background, pumping and recovery periods.

# PART II PRODUCTS

### 2.01 TEST PUMP

A. Furnish the necessary instruments and pumping equipment capable of pumping at a steady rate ranging from 200 gpm to 2,000 gpm with a throttling device and gate valve so that the flow rate can be adjusted as directed by the ENGINEER.

B. Furnish a gate valve, orifice plate, and manometer to control and measure discharge.

C. Provide and install two (2), 1-inch I.D. drop tubes between the pump column and casing, from the water level access fitting at the wellhead to 5 feet above the pump intake or as directed by the ENGINEER. The drop tube shall enable the Engineer to manually measure water levels without interference of the pump, pump column or electronic water level monitoring equipment.

D. The CONTRACTOR shall provide a pressure transducer, data logger, and logger well cap seal for water level measurement prior to, during, and after pump testing. The CONTRACTOR shall coordinate with the ENGINEER to determine the type of transducer and logger required for the anticipated drawdown, static water level logging periods, pumping periods, and recovery periods. The transducer and logger provided by the CONTRACTOR shall include the ability to view data throughout the test to verify readings. The ENGINEER shall determine data recording frequency and format. Data shall be precise, accurate, and match manual water level measurements. Imprecise or inaccurate data shall be rejected requiring pumping tests and monitoring to be repeated at the CONTRACTOR'S expense. Electronic data shall be submitted to the ENGINEER within 24 hours of completion of the pump test. The data logger shall be installed in the well a minimum of 12 hours prior to and remain a minimum of 12 hours following the pumping test for the purpose of the collection of background and recovery water level data.

### 2.02 FLOW METER

Provide a calibrated flowmeter with direct measurement and a totalizer to measure flow. Anticipated metered flows shall range from 200 to 2,000 gpm. Certification shall be no older than 60 days prior to notice to proceed and attest to a precision of 95 percent or greater for the range of the meter.

### 2.03 DISCHARGE PIPING

Provide all pipe, fittings, and valves required to transmit discharge water from the pump to the Formation Water Disposal System identified in SECTION 32 21 27.

## PART III EXECUTION

### 3.01 PUMPING TESTS

A. Install and operate the pumping test equipment. Pumping tests shall consist of one, 8-hour, step drawdown test (approximately 2 hours/step) at rates determined by the ENGINEER. The CONTRACTOR shall determine the

appropriate engine and gate valve settings for the desired pumping rate prior to the test date in order to achieve a constant rate as soon as possible after the start of each test/test step.

B. Sufficient time shall be permitted for the ENGINEER to collect a static water level in the well. The static water level shall be measured by the CONTRACTOR prior to the start of pumping each day.

C. The CONTRACTOR shall assist the ENGINEER with connections required to connect the ENGINEER'S provided silt density index (SDI) testing equipment to the pump discharge. The CONTRACTOR shall provide, operate, and maintain a clean auxiliary pump capable of maintaining 35 pounds per square inch (psi) for SDI testing. The auxiliary pump shall be plumbed to the well discharge for sampling and testing. The CONTRACTOR shall provide fittings and fabricate connections, as needed, to enable the ENGINEER to perform the SDI tests through the duration of the pumping test.

## 3.02 DISCHARGE WATER

A. Discharge water generated during rehabilitation shall be discharged to the CONTRACTOR'S Formation Water Disposal System. Settling and treatment of formation water to be discharged is the CONTRACTOR'S responsibility and shall be in accordance with all applicable regulations and SECTION 32 21 27. The CONTRACTOR shall set up and maintain discharge water transmission piping, as required in SECTION 32 21 27. Discharge water shall always be contained and under control of the CONTRACTOR.

B. The CONTRACTOR is solely responsible, by any and all methods necessary, to meet the requirements for the discharge of water. If the CONTRACTOR fails to fulfill proper requirements for the discharge of water, the CONTRACTOR is responsible for complete restoration of the discharge location to the original condition at no cost to the OWNER.

**END OF SECTION**

(This page intentionally left blank.)

## SECTION 33 21 26.10

## TEST WELL INTERVAL SAMPLING

### PART I GENERAL

#### 1.01 SCOPE OF WORK

A. This section covers the work, equipment and materials necessary for furnishing and installing the test well and performing interval sampling.

B. The purpose of the interval sampling is to determine aquifer quality. Representative groundwater samples shall be collected from approximately eight (8) intervals between the depths of approximately 50 feet and 160 feet below land surface. Sampling depth will be based on pilot hole results.

C. The test well shall be located at the location as shown on project drawings. Following interval sampling, the test well shall be abandoned.

D. An alternate interval testing and sampling program may be proposed by the CONTRACTOR however; at a minimum, the CONTRACTOR must have the capability to perform the work as specified.

#### 1.02 SUBMITTALS

A. Provide manufacturer specifications and technical data on well casing and screen used for installation in the test well.

### PART II PRODUCTS

#### 2.01 GENERAL REQUIREMENTS

A. At a minimum, casings shall conform to the requirements specified in SECTION 33 21 23.

#### 2.02 TEST WELL CASING

A. The test well casing shall have a minimum inside diameter of two (2) inches. The CONTRACTOR shall recommend the appropriate schedule of casing for use in the test well for ENGINEER approval based on the CONTRACTOR's experience. Test well casing material shall be recommended by the CONTRACTOR; material must be of sufficient strength to withstand the process of test well interval sampling.

## 2.03 TEST WELL SCREEN

A. The CONTRACTOR shall recommend a screen that will withstand the stresses of installation, development, and sampling without collapse or impairment of the water sampling program. Test well casing and screen material shall be determined by the CONTRACTOR. Material shall be new and unused and conform to ASTM standards.

B. The selected screen shall have sufficient tensile and collapse strength to withstand the proposed testing program.

## 2.04 GRAVEL PACK

Gravel pack material shall be Standard Sand and Silica Company, "Sand," 6 by 14, gravel, or equivalent.

# PART III EXECUTION

## 3.01 GENERAL

A. The test well shall consist of approximately 170 feet of 2-inch diameter casing and 10 feet of 0.020-inch slot screen. The test well shall be installed in the 6-inch diameter pilot hole at a depth of approximately 160 feet and gravel packed to surface.

B. Following test well and gravel pack placement, the test interval shall be developed using air lift, surge block, surge pumping or another ENGINEER approved method. After development of the interval, a CONTRACTOR provided test/sampling submersible pump shall be installed in the test well so that a representative water sample can be retrieved from the test interval. A sample shall be collected when each interval has been developed to the satisfaction of the ENGINEER. Each interval zone testing is anticipated to take approximately 2 to 3 hours for completion, however, may vary from interval to interval.

C. The CONTRACTOR shall collect a sample from each test interval and provide to the ENGINEER for analysis of the following parameters at a minimum: temperature, specific conductivity, total dissolved solids, soluble iron, total iron, hydrogen sulfide, turbidity, and chloride.

D. Following successful water sampling, the 2-inch diameter test well and screen shall be pulled up to the next higher interval to be sampled. The test well shall then be gravel packed again and the process of development and water sampling repeated for up to eight (8) samples.

E. The process of sampling and pulling back the test well shall be repeated at

various depths until the uppermost sample has been collected.

F. Following interval sampling, the test well materials shall be removed and the borehole shall be abandoned.

G. An alternate interval testing and sampling program may be proposed by the CONTRACTOR. However, at a minimum the CONTRACTOR must have the capability to perform the work as specified.

H. The CONTRACTOR shall re-drill, replace and/or retest any test well component, tool, pump or any associated component that fails for any reason before representative samples are obtained.

I. An alternate interval testing and sampling program may be proposed by the CONTRACTOR however; at a minimum the CONTRACTOR must have the capability to perform the work as specified. Any alternate plan shall be paid for in the same manner as specified in the bid form.

## 3.02 DISCHARGE WATER

A. Discharge water shall always be contained and under control by the CONTRACTOR. Any erosion that results from the discharge water shall be immediately repaired by the CONTRACTOR to its previous non-eroded condition.

B. The CONTRACTOR shall ensure that the discharge water does not impact adjoining property unless it is specifically approved by the ENGINEER, does not flood streets or impede any traffic flow in any way, and does not cause a nuisance in general.

**END OF SECTION**

(This page intentionally left blank.)

## SECTION 33 21 27

## FORMATION WATER DISPOSAL SYSTEM

# PART I GENERAL

## 1.01 SCOPE OF WORK

A. Provide labor, equipment, and materials to furnish, assemble, and maintain pumps and transmission piping as required to transmit formation water from the CONTRACTOR'S construction wellhead to CONTRACTOR settling tanks and to approved surface water discharge locations adjacent to or near the well sites.

B. The CONTRACTOR is prohibited from discharging formation water to the ground surface at the drilling site. All formation water discharged from the well must be contained at all times and be directed to the designated discharge location using the CONTRACTOR'S Formation Water Disposal System.

C. Formation water shall be discharged to individual locations as depicted in project drawings.

- Wells R-1, R-2, R-3, R-6, R-7, R-8, R-9, R-10: Discharge to ACME Improvement District water bodies and do not required discharge permits.
- Wells 29 and 30: Discharge to adjacent LWDD canals and will required Lake Worth Drainage District Right of Way permit to be obtained by the CONTRACTOR.
- Well R-2: Discharge to WTP onsite stormwater drain.
- Well 23: Discharge to stormwater drain on State Road 7 and will required MOT permit to be obtained by the CONTRACTOR.
- Well 24: Discharge to stormwater drain adjacent to well site.
- Wells 29, 20, 22: Discharge ***TBD.***

D. If the discharge locations outlined above are not capable of handling maximum discharge rates as described in SECTION 33 21 25, the CONTRACTOR shall utilize settling systems and storage tanks to settle solids and reduce turbidity prior to discharge to the final outfall location.

E. The CONTRACTOR is solely responsible, by any and all methods necessary, to meet the requirements for discharge of water. If the CONTRACTOR fails to fulfill proper requirements of discharge water, the CONTRACTOR is responsible for complete restoration of the discharge location to the original condition at no cost to the OWNER.

F. The CONTRACTOR shall employ all means necessary to minimize, to the greatest extent possible, erosion, turbidity at the settling location, and final outfall location. The CONTRACTOR is solely responsible for the removal of discharged solids from any discharge location and restoration of discharge locations to their original condition to the satisfaction of the ENGINEER.

G. The CONTRACTOR shall cease water discharge operations if weather conditions impede the available capacity of the discharge location.

### 1.02 SUBMITTALS

A. Submit a Best Management Practices plan including a schematic plan of all equipment, piping, and silt and turbidity barriers planned for use during water discharge for approval by the OWNER and ENGINEER.

B. Submit an in-line flow meter calibration report to the OWNER and ENGINEER indicating calibration within the last 60 days.

C. Submit Generic Discharge Permit (62-621.300(2) FAC) notification to the ENGINEER.

D. Submit land development permit for discharge for all applicable stormwater discharge locations.

## PART II PRODUCTS

### 2.01 EQUIPMENT

A. The CONTRACTOR shall provide and maintain a transfer pump(s) capable of pumping the total volumes and anticipated maximum rates of discharge from the well as defined in SECTION 33 21 25. The pump shall be used for the transfer of water from the settling tanks to the designated discharge location.

B. The CONTRACTOR shall provide polyethylene (fusion welded), or approved equal, transmission piping, couplings, valves, reusable fittings and other items needed to assemble, operate, and maintain the Formation Water Disposal System. Multiple vessels shall be connected and sequential to provide sufficient retention time for solids separation prior to fluid discharge. Vessel layout and arrangement must be located within the designated construction area specified on the project drawings.

C. The CONTRACTOR shall furnish and install an in-line flow meter, calibrated within the last 60 days. Flow meter shall have a flow rate indicator and totalizer and be capable of measuring discharge rates at the maximum flow rate of the sediment control system in place.

D. The CONTRACTOR shall provide, operate, and maintain as many pumps as required to transmit water from the well to the outfall location. The pumps shall be capable of pumping at the maximum rates for the elements of work contemplated herein.

E. The CONTRACTOR shall employ all means necessary to minimize to the greatest extent possible erosion, turbidity at the settling location and final outfall location, and containment of discharge solids, including, but not limited to, the use of de-silting/de-sanding separators, settling tanks, vacuum truck for disposal of all drilling and well testing fluids, and turbidity barriers at the outfall location. CONTRACTOR shall use an energy diffuser at the formation water disposal location to aid in minimizing erosion. The CONTRACTOR shall minimize impact to OWNER'S facilities and fully restore all areas used for formation water discharge.

## PART III EXECUTION

### 3.01 PREPARATION

A. Review final discharge location with ENGINEER to confirm proper location and to minimize impact to site erosion.

B. The CONTRACTOR shall be responsible for applying for, obtaining, and monitoring for an FDEP Generic Permit for Discharge of Ground Water from Dewatering Operations per 62-621.300(2) for discharge of water to all State water bodies including application fee. No water quality sampling is required in association with this application; however, flow (in GPD) must be measured (actual or estimated) and recorded once per week when discharging. The flow rate cannot exceed the design flow rate of the sediment control system in place. A record of weekly flow and a copy of the permit must be kept on-site for FDEP inspection. Although not required by the FDEP, the CONTRACTOR is required to monitor and measure turbidity throughout development to ensure turbidity is less than 29 NTU prior to discharge.

C. The CONTRACTOR shall use Best Management Practices (BMPs) and all means necessary to settle and clean discharge water prior to discharge to the State Water bodies, including but not limited to the use of settling tanks and floating turbidity barriers properly installed in receiving water bodies. Well drilling activities shall be adjusted accordingly and corrective actions taken prior to any exceedances of regulatory requirements at the State Water bodies with respect to the CONTRACTOR'S discharge water. The CONTRACTOR shall employ all methods necessary to ensure the discharge water at the discharge point shall be clear, have a pH of no less than 6.0,

less than 29 NTU turbidity and meet FDEP requirements for Generic Permit for Discharge of Ground Water from Dewatering Operations 62-621.300(2).

D. Discharge directly into an outfall without settling systems shall not be permitted.

## 3.02 CONSTRUCTION

A. Assemble the transmission piping in accordance with the project drawings. Use high-density polyethylene (HDPE), fusion welded pipe, or other approved equivalent, that conforms to AWWA C906 or AWWA C905 for temporary formation water disposal piping. All fittings shall be fusion welded HDPE or approved equal.

B. The CONTRACTOR shall be responsible for providing and maintaining driveway access and road crossings for the access roads and associated appurtenances.

C. Discharge activities shall comply with specifications for all roadway and traffic controls. The CONTRACTOR shall take necessary precautions for the protection of the Work and the safety of the public.

## 3.03 OPERATION

A. The formation water disposal piping and/or hosing shall be monitored continuously for leaks and possible problem areas. A thorough inspection of the complete pipeline and/or hosing shall be conducted daily prior to startup. Repairs shall be made prior to use.

B. The CONTRACTOR shall coordinate discharge formation water activities with the ENGINEER and OWNER. Operation of the Formation Water Disposal System shall be in accordance with appropriate FDEP permit regulations. If non-compliance occurs, discharge shall be discontinued until the monitored non-compliance levels are below permitted limits. The time required to comply shall be considered incidental to the Work and shall not result in additional compensation to the CONTRACTOR.

C. Pumps shall be capable of pumping water at the anticipated maximum rates of flow. Throttling devices shall be provided on the pumps to adjust the pumping rates accordingly. Valves shall be provided as needed to shut off flow and stop gravity drainage, if necessary.

D. Cleaning and disposal of discharge solids within the settling system shall be removed using a vacuum truck and disposed of in accordance with local, state, and federal regulations. Removal of these materials shall be

considered incidental to the Work and shall not result in additional compensation to the CONTRACTOR.

E. The Formation Water Disposal System may require modifications based on site specific activity and associated quality and quantity of discharge water generated. The CONTRACTOR shall not be compensated for these modifications and the costs should be included in the Lump Sum cost associated with Pay Item Formation Water Disposal System.

F. Cleaning of the storm water drains, drainage pipes, and/or outfall canals shall be performed by the CONTRACTOR following completion of construction activities. The costs should be included in the Lump Sum cost associated with Pay Item Formation Water Disposal System.

**END OF SECTION**

(This page intentionally left blank.)

## SECTION 33 21 28

## PRODUCTION WELL ACIDIZATION

## PART I GENERAL

### 1.01 SCOPE OF WORK

A. Furnish all labor, equipment, and materials required for acidization.

B. The CONTRACTOR shall provide superintendents in the field with acidization experience who meet the minimum requirements as outlined in the Bidder's questionnaire form.

C. The CONTRACTOR shall provide redundancy in onsite field equipment required to safely perform acidization.

D. The CONTRACTOR is advised that acid treatment and associated setup includes pumping acid into the well, monitoring of the well, and treatment and disposal of spent acid until discharge water returns to a consistent and repeated pH measurement of 6.5 or higher. Once discharge water has returned to an acceptable pH and specific conductance, the CONTRACTOR shall perform a specific capacity test to determine whether additional acid treatment is required. The post acidization specific capacity test shall be performed at a rate equal to the pre-acidization specific capacity test and prior to setting up for pump development. Acidization treatment shall be considered complete upon inspection and approval by the ENGINEER. All costs associated with acid treatment including the purging of spent acid water and the initial specific capacity test are to be included in the unit price for acid treatment setup. The CONTRACTOR shall not bill against pump development nor pump testing for time spent flowing the well to remove spent acid and/or return to an acceptable pH and specific conductance.

E. Upon completion of successful acid treatment as accepted and approved by the ENGINEER, the CONTRACTOR shall remove the acid treatment setup and continue to subsequent rehabilitation tasks including well development. The CONTRACTOR shall allow for up to five (5) work days, from the time that spent acid has been removed from the well and performing specific capacity testing, for the ENGINEER to determine whether additional acid shall be injected.

### 1.02 SUBMITTALS

A. Acidization header drawing including location of acid line, water injection line, gas bleed line, associated pressure gauges, and other access ports as needed to complete the scope of work.

B. Prior to acidization, CONTRACTOR shall provide plan for acidization, temporary acid storage, containment and safety plan for approval by ENGINEER.

C. Provide all chemical manufacturer information including NSF Standard 60 Certification and the Material Safety Data Sheets (MSDS) for all chemicals proposed for use in the well.

D. Provide acid transportation manifests and load weight tickets.

## PART II PRODUCTS

### 2.01 ACID

A. Furnish ENGINEER approved quantity of 20 Baume strength, 32 percent hydrochloric acid (food service grade) per well.

B. The CONTRACTOR shall ensure proper design and containment of acid pumps, hoses, fittings, and storage tanks and secondary containment to prevent spillage.

C. Place chemical resistant PacTank (or equivalent) portable spill containment berm on ground where chemical transports and tanks are to be spotted. Additional containment berm shall be placed along hose routes beneath hoses and fittings.

### 2.02 SODIUM BICARBONATE

A. Furnish sufficient sodium bicarbonate to manually distribute around the wellhead, acid hoses, valves, and truck to neutralize any acid in the event of a spill.

B. After acidization, prepare a sodium bicarbonate solution to raise the pH of the well development water to an acceptable level for disposal (pH between 6.5 and 8.5). pH testing shall be performed by the CONTRACTOR under the direction of the ENGINEER.

## PART III EXECUTION

### 3.01 PROCEDURE SEQUENCE

A. The CONTRACTOR shall perform acid treatment of the production wells as designated by the ENGINEER.

B. Each well shall be treated at a strength determined by the ENGINEER between a minimum strength of 3% hydrochloric acid and a maximum strength of 32% (20 Baume) hydrochloric acid. The CONTRACTOR shall include in the acidization plan the proposed procedure for adjusting the acid strength onsite. The plan shall include proposed methods to minimize degassing of the acid during mixing. The blend of hydrochloric acid outlined in the CONTRACTOR'S acidization plan shall be based on requested blend ratios per the ENGINEER. The actual blend rate shall be dependent on the individual well response to acid procedure in the field.

C. The amount and strength of acid used may be adjusted based on results and individual well conditions as determined by the ENGINEER.

D. The CONTRACTOR shall furnish and be capable of installing a sufficient length of steel acid tubing inside the well to place the base of tubing at any depth (down to the total depth of the well), as directed by the ENGINEER. Final length of drop tubing will be determined by the ENGINEER primarily based on the review of the pre-acidization video survey. The drop tubing shall be attached to a temporary CONTRACTOR provided water tight assembly. The CONTRACTOR provided temporary acidization wellhead assembly shall have access for drop tubing, a two-inch water injection line, a gas only relief line at the top of the wellhead, fluid relief line, and a pressure gage fitting.

E. All access ports shall be fitted with isolation valves. The wellhead shall provide a tight seal up to 100 psi. Provide and install a pressure gage on the wellhead to monitor pressure at the wellhead.

F. Set up systems and controls required for acidization including, but not limited to temporary acid storage, containment, formation water treatment and disposal system, tanks, equipment, etc. required for acidization, monitoring, purging, neutralization and control as outlined in the CONTRACTOR'S approved plan. The formation water treatment system shall be adequately sized so that acid can be removed from the well in one (1) day. The CONTRACTOR shall coordinate with the ENGINEER for inspection and approval of the setup prior to acidization of the well.

G. Pump the ENGINEER approved quantity and strength of acid through the drop tubing. The pumping method shall not introduce ambient air into the well. At all times the wellhead pressure shall be monitored and shall not exceed 50 psi. All equipment and materials must be approved by the ENGINEER.

H. It is the intent of these specifications to allow for two methods of acidizing. One method includes injecting "high strength" (32%) acid within a short duration and another method includes continuously injecting "weaker acid"

for a long duration (up to 24 hours of continuous injection). The ENGINEER will coordinate with the CONTRACTOR on the initial acid method to be implemented prior to the CONTRACTOR setting up the acid equipment. The ENGINEER may require a different method based on the results of the first acid injection, should additional acidization be deemed necessary. The CONTRACTOR shall be capable of injecting acid at an approximate rate of 200 gpm (for a high strength acid) and be capable of injecting at a low rate for a duration up to 24 hours (for a lower strength acid).

I. Provide adequate water supply to pump up to three (3) well casing volumes of chase water, plus the drop tubing capacity. This volume may be more or less depending on conditions and the acid reaction. The chase water shall be metered and pumped into the well simultaneously through the drop tubing and through the casing. The pumping rate shall be a minimum 200 gpm or as designated by the ENGINEER. Chase water shall be potable water, chlorinated to 1 mg/l available chlorine. Pump equipment must be capable of overcoming maximum pressure at wellhead if pressure increases during acidization procedure.

J. If a second acid pump is to be performed, the CONTRACTOR shall purge the spent acid from the well between acid pumps until pH of the purged water is no less than 6.5, or as directed by the ENGINEER. The CONTRACTOR shall also perform a specific capacity test between acid pumps.

K. Following acidization, the CONTRACTOR shall remove spent acid continuously and purge water shall have a pH of 6.5 within one (1) day of completing the acid injection.

L. Casing pressures shall be monitored continuously by the CONTRACTOR for at least 12 hours following acid treatment. If required, excess gas pressure shall be bled off as needed. A gas relief pipe shall be extended a minimum of 50 feet away from the work area, downwind from any potential immediate receptor.

M. Using the drop tubing, a water sample shall be collected by the ENGINEER for analysis 12 hours after acid treatment. If required by the ENGINEER, the CONTRACTOR shall pump additional chase water into the well using the same method as Paragraph I.

N. Discharge well through the formation water disposal connection until water is clear with a pH of 6.5 or higher. Water with a pH below 6.5 shall be contained and treated using a sodium bicarbonate solution to neutralize residual acid or be removed from the site. Treated water shall only be discharged from the holding tank after approval by the ENGINEER. All discharge to the outfall location shall comply with all applicable discharge permits. CONTRACTOR shall remove spent acid within one (1) day.

O. Purging of spent acid shall be considered complete when discharge water from the well is clear with a pH of 6.5 or higher, the specific conductance of the well is comparable to pre-acid treatment specific conductance values, and a specific capacity test has been conducted on the well to determine if additional acid treatment is necessary. The specific capacity test shall be performed using a calibrated flowmeter to measure flow rates. The CONTRACTOR shall also furnish and implement a secondary method to measure flow rates as approved by the ENGINEER. An acceptable secondary method could include an orifice weir and manometer, volumetric method and/or other method approved by the ENGINEER.

**END OF SECTION**

(This page intentionally left blank.)

## SECTION 33 21 29

## WELL FACILITY DISINFECTION

## PART I GENERAL

### 1.01 SCOPE OF WORK

A. Provide labor, equipment, and materials to disinfect the Production Well(s) pursuant to the requirements of AWWA C654-13 including pump facilities, wellhead, and piping according to the requirements of AWWA C-601.

B. Provide labor, equipment, and materials to perform analytical tests on the well. The CONTRACTOR shall subcontract an analytical laboratory to perform sampling and analytical services. The laboratory shall be certified to perform the scope of work by the Florida Department of Environmental Protection and local health department regulations.

C. Bacteriological analytical testing must match method preferred by OWNER.

D. All materials used in well construction including, but not limited to, well casings, screens, gravels, risers, centralizers, drilling water, pump, and motor must be cleaned and disinfected prior to installation in the well. Passing of bacteriological clearance is the sole responsibility of the CONTRACTOR.

### 1.02 SUBMITTALS

A. Provide State and County certifications for proposed laboratory. Bacteriological analytical testing method must match method preferred by OWNER.

B. Provide sampling reports, disinfection forms, completed chain of custody forms and analytical results for all consecutive sampling events. Laboratory reports shall be submitted within 30 days of receipt of samples by the laboratory.

C. MSDS for all products to be used for disinfection to be provided to CONTRACTOR a minimum of 15 days prior to commencement of disinfection.

## PART II PRODUCTS

## 2.01 MATERIALS

A. Free chlorine liquid.

B. Sodium hypochlorite.

C. Steriline.

# PART III EXECUTION

## 3.01 WELL FACILITY DISINFECTION

A. Provide notice to ENGINEER 48 hours in advance of treatment. ENGINEER may be present for disinfection and must have proper notification prior to work.

B. Post warning notices and secure the well facility from unauthorized access or use. Secure the area.

C. The CONTRACTOR shall disinfect the wells as soon as construction of the wells and cleaning procedures have been completed. The CONTRACTOR shall carry out adequate cleaning procedures immediately preceding disinfection where evidence indicates that normal well construction and development work have not adequately cleaned the wells. All oil, grease, soil, and other materials which could protect bacteria from disinfectants shall not be allowed in the hole. If evidence indicates that this material has entered the hole, it shall be thoroughly removed. The cleaning operation is to be carried out by pumping and swabbing only. Where test pumping equipment is to be used, such equipment shall be thoroughly scrubbed, or otherwise cleaned of foreign material.

D. Mix a sufficient concentration of chlorinated water solution to maintain 200 parts per million chlorine residual throughout the wells, pump, and added piping facilities. The pump and motor shall not be exposed to chlorinated water solutions with concentrations above 500 ppm. The recommended pH of chlorine solutions is between 5.5 and 6.8. Any well components sensitive to free chlorine or disinfecting agents will be disinfected and installed separately to prevent damage.

E. Disinfection procedures shall ensure that the disinfecting agent is uniformly applied throughout the entire water depth of the wells, without relying on subsequent mechanical or surging action for dispersing the disinfectant. For this purpose, the disinfecting agent shall be furnished or prepared in liquid form and placed in the wells through a hose or tremie of sufficient length to extend to the bottom of the wells. The disinfecting agent shall be applied through the hose, which is to be raised and lowered to achieve uniform distribution of the solution throughout the wells.

F. All portions of the wells above the water shall be maintained in a damp condition with water containing the required concentration of disinfecting agent for a period of not less than 20 minutes. The disinfecting agent shall be left in the wells for a period of at least 24 hours.

G. After a 24 hour or longer contact period, the wells are to be pumped to clear them of the disinfecting agent. The disposal point for the purged water shall be selected so as to minimize potential damage to aquatic life and vegetation.

H. All water used for treatment shall be potable and from an ENGINEER approved source.

I. The complete disinfection program and methods followed, especially if materially different from those specified, shall be in accordance with directives of the Florida Department of Environmental Protection (FDEP), Division of Health and all methods employed shall have their approval. Final approval of the bacterial samples shall be received from the FDEP and Palm Beach County Health Department prior to the time that the system is placed into operation.

J. Prepare and submit '*Surficial Aquifer Well Disinfection Reporting Form*' for each disinfection event.

## 3.02 BACTERIOLOGICAL ANALYSIS FOR WELLS

A. Purge detectable chlorine solution from the well facility.

B. The CONTRACTOR shall collect up to twenty (20) consecutive water samples per well at an approved location starting 48 hours after disinfection procedure. No less than 6 hours will elapse between sample collection events. No more than two (2) samples shall be collected per day. Sample collection and handling procedures shall be in accordance with a State approved laboratory quality assurance plan by an experienced sampling technician.

C. Any fees associated with additional disinfections or sampling to comply with the above will be at the CONTRACTOR'S expense, including all costs associated with continued well pumping.

**END OF SECTION**

(This page intentionally left blank.)

# VILLAGE OF WELLINGTON
# SURFICIAL AQUIFER WELL DISINFECTION REPORTING FORM

## GENERAL INFORMATION

WELL NAME:_____ DATE:_____ WELLFIELD:_____ SUPERVISOR:_____

COMMENTS:_____

## WELL INFORMATION FOR CHEMICAL ESTIMATION

DEPTH TO BOTTOM OF CASING (FT):_____ DIAMETER OF BOREHOLE (IN):_____

INSIDE DIAMETER OF CASING (IN):_____ INSIDE DIAMETER OF SCREEN (IN):_____

TOTAL DEPTH OF SCREEN (FT):_____ DEPTH TO STATIC WATER LEVEL (FT):_____

DEPTH TO TOP OF SCREEN (FT):_____ CASING AND SCREEN VOLUME (GAL):_____

LENGTH OF SCREEN (FT):_____ TOTAL TREATMENT VOLUME VOLUME (GAL):_____

## DISINFECTION CHEMICAL DATA

MANUFACTURER:_____ PRODUCT NAME:_____ AGE:_____

DISINFECTION CHEMICAL TYPE:_____ CONCENTRATION (%):_____ EFFECTIVE CONCENTRATION (%):_____

## DISINFECTION SOLUTION MIX

MIX RATIO CALCULATED BY:_____ TYPE OF EQUIPMENT TO BE DISINFECTED:_____

### BATCH 1

VOLUME OF CHEMICAL (GAL):_____ VOLUME OF WATER (GAL):_____ STRENGTH OF MIX (mg/L):_____

TESTED PROPERTIES OF MIX: CHLORINE RESIDUAL (mg/L)=_____ pH=_____

TIME:_____ SOLUTION APPLICATION METHOD:_____ SOLUTION APPLICATION DEPTH:_____

NOTES:_____

### BATCH 2

VOLUME OF CHEMICAL (GAL):_____ VOLUME OF WATER (GAL):_____ STRENGTH OF MIX (mg/L):_____

TESTED PROPERTIES OF MIX: CHLORINE RESIDUAL (mg/L)=_____ pH=_____

TIME:_____ SOLUTION APPLICATION METHOD:_____ SOLUTION APPLICATION DEPTH:_____

NOTES:_____

### BATCH 3

VOLUME OF CHEMICAL (GAL):_____ VOLUME OF WATER (GAL):_____ STRENGTH OF MIX (mg/L):_____

TESTED PROPERTIES OF MIX: CHLORINE RESIDUAL (mg/L)=_____ pH=_____

TIME:_____ SOLUTION APPLICATION METHOD:_____ SOLUTION APPLICATION DEPTH:_____

NOTES:_____

## WELL SURGING

NUMBER OF SURGES: _____

TIME OF SURGING: _____

SURGE WATER TESTING

CHLORINE RESIDUAL (mg/L): _____

pH: _____

## RECIRCULATION

RECIRCULATION RATE:_____

DURATION OF RECIRCULATION:_____

RECURCULTION WATER TESTING

CHLORINE RESIDUAL (mg/L):_____

pH:_____

## WELL PURGING

DATE: _____

TIME: _____

PURGED WATER TESTING

TOTAL CONTACT TIME IN WELL: _____

CHLORINE RESIDUAL (mg/L): _____

pH: _____

## DECHLORINATED DISCHARGE WATER

DATE:_____

TIME:_____

DISCHARGE WATER TESTING

DISCHARGE LOCATION:_____

CHLORINE RESIDUAL (mg/L):_____

pH:_____

NOTES:

WELL CHLORINATION SOLUTION (50 mg/L)=0.4 GAL NaClO (12.5%) or 0.6 LBS Ca(ClO)2 (72%) PER 1000 GAL WATER

EQUIPMENT SPRAY CHLORINATION SOLUTION (200mg/L)=1.6 GAL NaClO (12.5%) OR 2.3 LBS Ca(ClO)2 (72%) PER 1000 GAL WATER

GRAVEL PACK CHLORINATION SOLUTION (100 mg/L)=0.8 GAL NaClO (12.5%) OR 1.2 LBS Ca(ClO)2 (72%) PER 1000 GAL WATER

NaClO DETERIORATES AT APPROXIMATELY 5% TO 10% PER 30 DAYS OF STORAGE

(This page intentionally left blank.)

## SECTION 33 21 32

## TEMPORARY WELLHEAD

## PART I GENERAL

### 1.01 SCOPE OF WORK

A. The CONTRACTOR shall furnish, fabricate, and install a temporary construction wellhead for use during well construction and development prior to installation of final wellhead.

### 1.02 SUBMITTALS

A. Submit a detailed drawing of the temporary construction wellhead.

B. Provide a safety plan for temporary Public Water Supply (PWS) wellhead security plan.

## PART II PRODUCTS

### 2.01 MATERIALS

A. Materials for temporary wellhead construction shall be determined by the CONTRACTOR and submitted in the detailed drawing.

## PART III EXECUTION

### 3.01 REQUIREMENTS

A. The PWS well wellhead shall be maintained and protected with a secure wellhead cover by the CONTRACTOR at all times.

B. During active well work, the CONTRACTOR shall provide personnel onsite at all times. At all times during the progress of the work and at completion, the CONTRACTOR shall use reasonable precautions to prevent either tampering with the well or the entrance of foreign material into it. The well shall be sealed at all times unless testing is in progress. At the end of each work day, the well shall be sealed, to the satisfaction of the ENGINEER.

C. A secure wellhead cover must be immobile, solid and fully cover the open wellhead. A secured wellhead must be a bolted in place blind flange or approved equal.

D. At no time will the wellhead be left open or unsecure. It is the sole responsibility of the CONTRACTOR to properly secure the wellhead at all times.

**END OF SECTION**

## SECTION 33 29 00

## WELL ABANDONMENT

# PART I GENERAL

### 1.01 SCOPE OF WORK

A. This section covers the labor, equipment, and materials required to furnish and install the cement grout to abandon an existing well as specified in the project documents. All work performed shall conform to State of Florida well drilling practices and to AWWA standards for deep wells (AWWA; A100-15).

B. Obtain all required permits for abandonment of existing well(s).

C. It is the sole responsibility of the CONTRACTOR to perform all tests (including but not limited to preliminary video and geophysical logging) to confirm all existing materials prior to work.

### 1.02 SUBMITTALS

A. Well abandonment permit.

B. Provide data on all proposed cement suppliers, additives, and manufacturer's specifications.

C. Provide bulk cement units weight tickets for verification of cement quantities pumped.

D. During cementing, provide cement slurry weight data for each grouting stage. A fixed, safe, accessible location to collect samples must be provided to the satisfaction of the ENGINEER. Samples of the cement slurry shall be collected, weighed and recorded. The correct mix ratios shall be maintained. If performed in batches, provide slurry weight and collect samples for each batch mixed. If performed in continuous mixing, provide slurry weights and collect samples at the beginning, middle, and end of pumping for each grouting stage.

# PART II PRODUCTS

### 2.01 GENERAL REQUIREMENTS

The CONTRACTOR shall furnish and install all grout and additives as specified.

## 2.02 PORTLAND CEMENT

Cement grout shall be API class B Portland cement and conform to ASTM C150, Type II standards.

# PART III EXECUTION

## 3.01 GENERAL REQUIREMENTS

A. The CONTRACTOR shall furnish and install all grout and additives as specified.

B. Cement and dry additives shall be delivered to the site in their dry state and mixed with water on site.

C. The use of ready-mix grout, mixed with water prior to delivery to the site, will be permitted; however, the CONTRACTOR must ensure that all delivered grout meets the criteria listed below and outlined in this Section. Any delivered ready-mix grout that does not meet the criteria will be rejected at the CONTRACTOR'S cost.

- Grout temperature shall be read and recorded prior to pumping downhole using equipment provided by the CONTRACTOR and viewed in the field by the ENGINEER. Acceptable grout temperature shall be in accordance with Specification for Hot Weather Concreting (ACI 305), including, but not limited to, a maximum temperature of ready mixed grout of no more than 95 degrees Fahrenheit, unless otherwise specified by the ENGINEER;
- Slurry weight of ready mixed grout shall be measured prior to pumping downhole using equipment provided by the CONTRACTOR and viewed in the field by the ENGINEER;
- Ready mixed grout slurry shall be free of grout stones (improperly mixed grout) and other foreign materials.

## 3.02 WELL ABANDONMENT

A. Obtain permit for abandonment and any special instructions required by permit.

B. The CONTRACTOR is solely responsible for the successful execution of grouting. Well abandonment shall be in conformance with all applicable State regulations. The CONTRACTOR shall provide adequate notice prior to cementing to enable the ENGINEER to observe all cementing operations. The CONTRACTOR will remove riser casing and screen from the well as required by AWWA, A100-15 to ensure an effective seal.

C. Prior to pumping grout, the total well depth will be measured by the CONTRACTOR and reported to the ENGINEER.

D. Abandonment shall be performed by pumping the cement slurry to the bottom of the well using a tremie pipe. Only neat cement will be used for the abandonment. The base of the tremie pipe will be placed within 3 feet of the total well depth. Cement will be pumped continuously from this depth, filling the well from bottom to top, until cement is visible at the top of the well. After the cement has hardened in the well, the depth of the hardened grout from the previous grouting stage will be measured in the presence of the ENGINEER.

E. As was performed for the prior grouting stage, cement will be pumped from the bottom to the top, filling the remaining cased interval, until grout is visible at the top of the well to within three feet below land surface.

F. Cut surface casing to three (3) feet below land surface and backfill to grade with clean fill.

G. Remove all existing above ground components within the fenced area, including fence, and transport all ENGINEER/OWNER considered reusable components to the OWNER'S water treatment plant. Properly dispose or recycle all unusable components. Reusable components shall be determined by the OWNER during pre-construction walkthroughs and outlined on salvage forms.

**END OF SECTION**

(This page intentionally left blank.)

**VILLAGE OF WELLINGTON**
**SURFICIAL AQUIFER PRODUCTION WELL REHABILITATION AND MAINTENANCE PROJECT**
**ATTACHMENT 1**
**EXISTING WELL CONSTRUCTION DETAILS**

| | R-1 | R-2 | R-3R | R-4 | R-6 | R-7 | R-8 | R-9 | R-10 | 18 | 19 |
|---|---|---|---|---|---|---|---|---|---|---|---|
| Outer Casing Diameter and Material (in) | 24-in-Steel | 20-in Steel | 30-in Steel | 20-in Steel | 20-in Steel | 20-in Steel | 20-in Steel | 20-in Steel | 20-in Steel | 18-in Steel | 18-in Steel |
| Outer Casing Diameter Number (in) | 24 | 20 | 30 | 20 | 20 | 20 | 20 | 20 | 20 | 18 | 18 |
| Outer Casing Material | Steel | Steel | Steel | Steel | Steel | Steel | Steel | Steel | Steel | Steel | Steel |
| Outer Casing Depth (ft bls) | 70 | 60 | 56.5 | 53 | 62 | 55 | 55 | 55 | 55 | | |
| Inner Casing Diameter and Material (in) | 12-in PVC | 12-in PVC | 12-in PVC | 12-in FRP | 12-in FRP | 12-in Sch.40 PVC | 12-in Sch.40 PVC | 12-in Sch.40 PVC | 12-in Sch.40 PVC | | |
| Inner Casing Diameter Number (in) | 12 | 12 | 12 | 12 | 12 | 12 | 12 | 12 | 12 | 12 | 12 |
| Inner Casing Material | SDR 17 PVC | SDR 17 PVC | SDR 17 PVC | FRP | FRP | Sch.40 PVC | Sch.40 PVC | Sch.40 PVC | Sch.40 PVC | | |
| Inner Casing (Riser) Depth (ft) | 69 | 61 | 56.5 | 56.5 | 70 | 55 | 56 | 55 | 56 | 70 | 72 |
| Total Depth (ft) | 120.5 | 112 | 116.5 | 107 | 120 | 120 | 117 | 120 | 125 | 90 | 101 |
| Screened Interval From-To (ft) | 69 - 120.5 | 61 - 112 | 56.5 - 116.5 | 56.5 - 102 | 70 - 120 | 55 - 120 | 56 - 117 | 55 - 115 | 56 - 125 | 70 - 90 | 72 - 101 |
| Screen Length | 51.5 | 51 | 60 | 45.5 | 50 | 65 | 61 | 60 | 69 | 20 | 29 |
| Screen Casing Diameter and Type (in) | 12-in SS | 12-in SS | 12-in SS | 12-in FRP | 12-in FRP | 12-in SS | 12-in SS | 12-in SS | 12-in SS | | |
| Screen Slot Size (in) | 0.09 | 0.09 | 0.09 | 0.07 | 0.07 | 0.05 | 0.05 | 0.05 | 0.04 | | |
| Gravel Pack size | 4 x 9 | 4 x 9 | 4 x 9 | 6-14 | 6-14 | 10-16 (E.S. =0.054") | 10-16 (E.S. =0.054") | 10-16 (E.S. =0.054") | 12-20 (E.S. = 0.04") | | |
| Pump/Motor Assembly Drop Pipe Section Length[2] | 20' section | 20' sections | 20' sections | 20' sections | 10' sections | 10' sections | 10' sections | 10' sections | 10' sections | 20' sections | 20' sections |

[1]Constructed, but not connected to RWM.
*Proposed wells; Depths are estimates and shall be determined based on lithologic conditions encountered at each well location.
[2]Reported lengths

**VILLAGE OF WELLINGTON**
**SURFICIAL AQUIFER PRODUCTION WELL REHABILITATION AND MAINTENANCE PROJECT**
**ATTACHMENT 1**
**EXISTING WELL CONSTRUCTION DETAILS**

| | 20 | 21 | 22 | 23 | 24 | 25[1] | 26[1] | 27[1] | 29 | 30 |
|---|---|---|---|---|---|---|---|---|---|---|
| Outer Casing Diameter and Material (in) | 18-in Steel | | 20-in Steel | 20-in Steel | 24-in Steel | 20-in Steel | 20-in Steel | 20-in Steel | 24-in Steel | 24-in Steel |
| Outer Casing Diameter Number (in) | 18 | | 20 | 20 | 24 | 20 | 20 | 20 | 24 | 24 |
| Outer Casing Material | Steel | | Steel | Steel | Steel | Steel | Steel | Steel | Steel | Steel |
| Outer Casing Depth (ft bls) | 70 | 68 | 65 | 59 | 70 | 80 | 80 | 75 | 75 | 80 |
| Inner Casing Diameter and Material (in) | | | 12-in FRP | 12-in FRP | 12-in SDR17 PVC | 12-in SDR17 PVC | 12-in SDR17 PVC | 12-in SDR17 PVC | 16-in SDR17 PVC | 16-in SDR17 PVC |
| Inner Casing Diameter Number (in) | 12 | 12 | 12 | 12 | 12 | 12 | 12 | 12 | 16 | 16 |
| Inner Casing Material | | | FRP | FRP | SDR 17 PVC | SDR17 PVC | SDR17 PVC | SDR17 PVC | SDR17 PVC | SDR17 PVC |
| Inner Casing (Riser) Depth (ft) | 70 | 70 | 75 | 75 | 68.5 | 80 | 80 | 75 | 75 | 80 |
| Total Depth (ft) | 100 | 120 | 125 | 120 | 120 | 130 | 135 | 130 | 155 | 150 |
| Screened Interval From-To (ft) | 70 - 100 | 70 - 120 | 75 - 125 | 75 - 120 | 68.5 - 120 | 80 - 125 | 80 - 130 | 75 - 125 | 75 - 150 | 80 - 145 |
| Screen Length | 30 | 49 | 50 | 45 | 51.5 | 45 | 50 | 50 | 75 | 65 |
| Screen Casing Diameter and Type (in) | 12-in SS | 12 | 12-in FRP | 12-in FRP | 12-in SS | 12-in SS | 12-in SS | 12-in SS | 16-in SS | 16-in SS |
| Screen Slot Size (in) | 0.1 | | 0.07 | 0.07 | 0.09 | 0.045 | 0.06 | 0.09 | 0.06 | 0.09 |
| Gravel Pack size | | | 6-14 | 6-14 | 4 x 9 | 8-20 | 4-8 & 8-12 (50/50) | 4-8 & 0.25" (50/50) | 4-8 & 8-12 (50/50) | 4-8 & 0.25" (50/50) |
| Pump/Motor Assembly Drop Pipe Section Length[2] | 20' sections | 20' sections | 20' sections | 20' sections | 20' sections | 20' sections | 20' sections | 20' sections | 20' sections | 20' sections |

[1]Constructed, but not connected to RWM.
*Proposed wells; Depths are estimates and shall be determinec
[2]Reported lengths

**VILLAGE OF WELLINGTON**
**SURFICIAL AQUIFER PRODUCTION WELL REHABILITATION AND MAINTENANCE PROJECT**
**ATTACHMENT 1**
**EXISTING WELL CONSTRUCTION DETAILS**

| | 31* | 32* | 33* | 34* | 35* | 36* | 37* |
|---|---|---|---|---|---|---|---|
| Outer Casing Diameter and Material (in) | 24-in Steel | 24-in Steel | 24-in Steel | 24-in Steel | 24-in Steel | 24-in Steel | 24-in Steel |
| Outer Casing Diameter Number (in) | 24 | 24 | 24 | 24 | 24 | 24 | 24 |
| Outer Casing Material | Steel | Steel | Steel | Steel | Steel | Steel | Steel |
| Outer Casing Depth (ft bls) | 80 | 70 | 70 | 70 | 70 | 70 | 70 |
| Inner Casing Diameter and Material (in) | 16-in SDR17 PVC | 16-in SDR17 PVC | 16-in SDR17 PVC | 16-in SDR17 PVC | 16-in SDR17 PVC | 16-in SDR17 PVC | 16-in SDR17 PVC |
| Inner Casing Diameter Number (in) | 16 | 16 | 16 | 16 | 16 | 16 | 16 |
| Inner Casing Material | SDR17 PVC | SDR17 PVC | SDR17 PVC | SDR17 PVC | SDR17 PVC | SDR17 PVC | SDR17 PVC |
| Inner Casing (Riser) Depth (ft) | 80 | 70 | 70 | 70 | 70 | 70 | 70 |
| Total Depth (ft) | 150 | 120 | 120 | 120 | 120 | 120 | 120 |
| Screened Interval From-To (ft) | 80 - 150 | 70 - 120 | 70 - 120 | 70 - 120 | 70 - 120 | 70 - 120 | 70 - 120 |
| Screen Length | 70 | 50 | 50 | 50 | 50 | 50 | 50 |
| Screen Casing Diameter and Type (in) | 16-in SS | 16-in SS | 16-in SS | 16-in SS | 16-in SS | 16-in SS | 16-in SS |
| Screen Slot Size (in) | 0.09 | 0.09 | 0.09 | 0.09 | 0.09 | 0.09 | 0.09 |
| Gravel Pack size | 4 x 9 | 4 x 9 | 4 x 9 | 4 x 9 | 4 x 9 | 4 x 9 | 4 x 9 |
| Pump/Motor Assembly Drop Pipe Section Length[2] | 20' sections | 20' sections | 20' sections | 20' sections | 20' sections | 20' sections | 20' sections |

[1]Constructed, but not connected to RWM.
*Proposed wells; Depths are estimates and shall be determinec
[2]Reported lengths




FIGURE TITLE:

Village of Wellington
Surficial Aquifer Production Well Rehabilitation
and Maintenance Project

Page 246

LEGEND:

- Well Location
- Well To Be Abandoned
- Egress/Ingress
- Well Discharge Location

**JLA Geosciences, Inc.**

| DATE: | ATTACHMENT: |
|---|---|
| 2/19/2020 | 2A |
| DRAWN BY: CNM | |

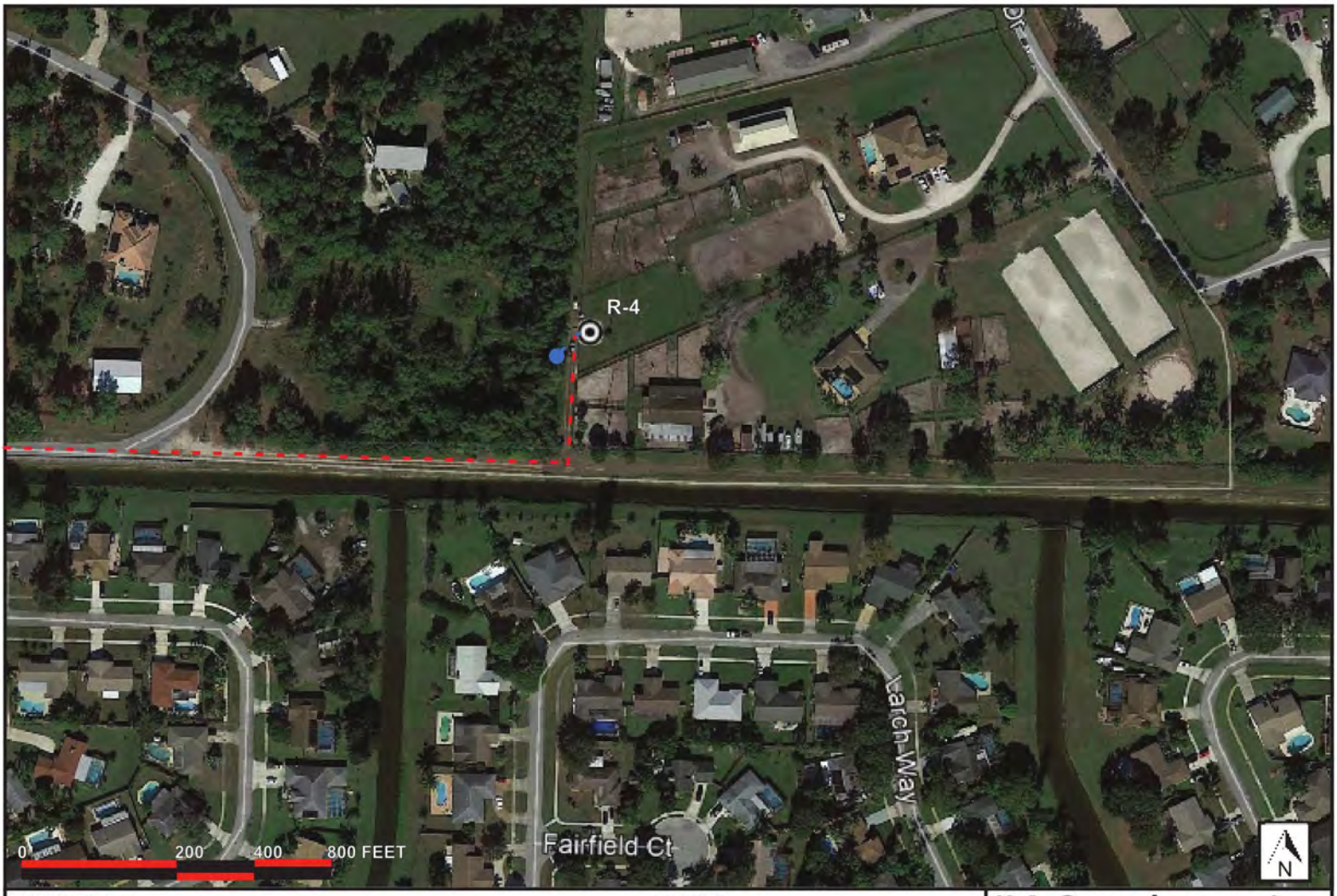


FIGURE TITLE:

Village of Wellington
Surficial Aquifer Production Well Rehabilitation
and Maintenance Project

Page 247

LEGEND:

- Well Location
- Egress/Ingress
- Well Discharge Location

**JLA Geosciences, Inc.**

| DATE: | ATTACHMENT: |
|---|---|
| 2/19/2020 | 2B |
| DRAWN BY: CNM | |




FIGURE TITLE:

Village of Wellington
Surficial Aquifer Production Well Rehabilitation
and Maintenance Project

Page 248

LEGEND:

- Well Location
- Egress/Ingress
- Well Discharge Location

**JLA Geosciences, Inc.**

| DATE: 2/19/2020 | ATTACHMENT: 2C |
|---|---|
| DRAWN BY: CNM | |

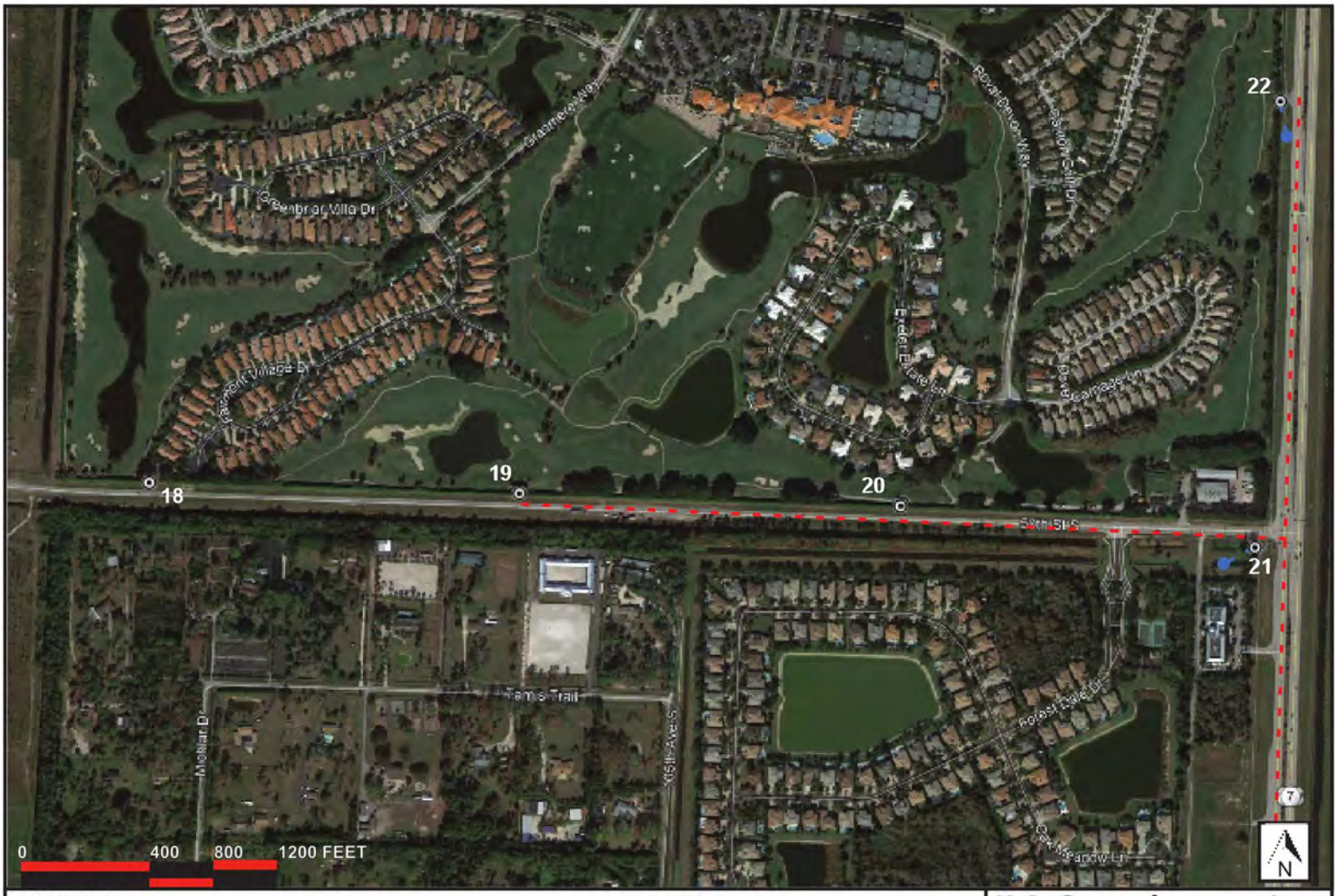


FIGURE TITLE:

Village of Wellington
Surficial Aquifer Production Well Rehabilitation
and Maintenance Project

Page 249

LEGEND:

- Well Location
- Egress/Ingress
- Well Discharge Location

**JLA Geosciences, Inc.**

| DATE: | ATTACHMENT: |
|---|---|
| 2/19/2020 | 2D |
| DRAWN BY: CNM | |




FIGURE TITLE:

Village of Wellington
Surficial Aquifer Production Well Rehabilitation
and Maintenance Project

Page 250

LEGEND:

- Well Location
- Egress/Ingress
- Well Discharge Location

**JLA Geosciences, Inc.**

| DATE: | ATTACHMENT: |
|---|---|
| 2/19/2020 | 2E |
| DRAWN BY: CNM | |

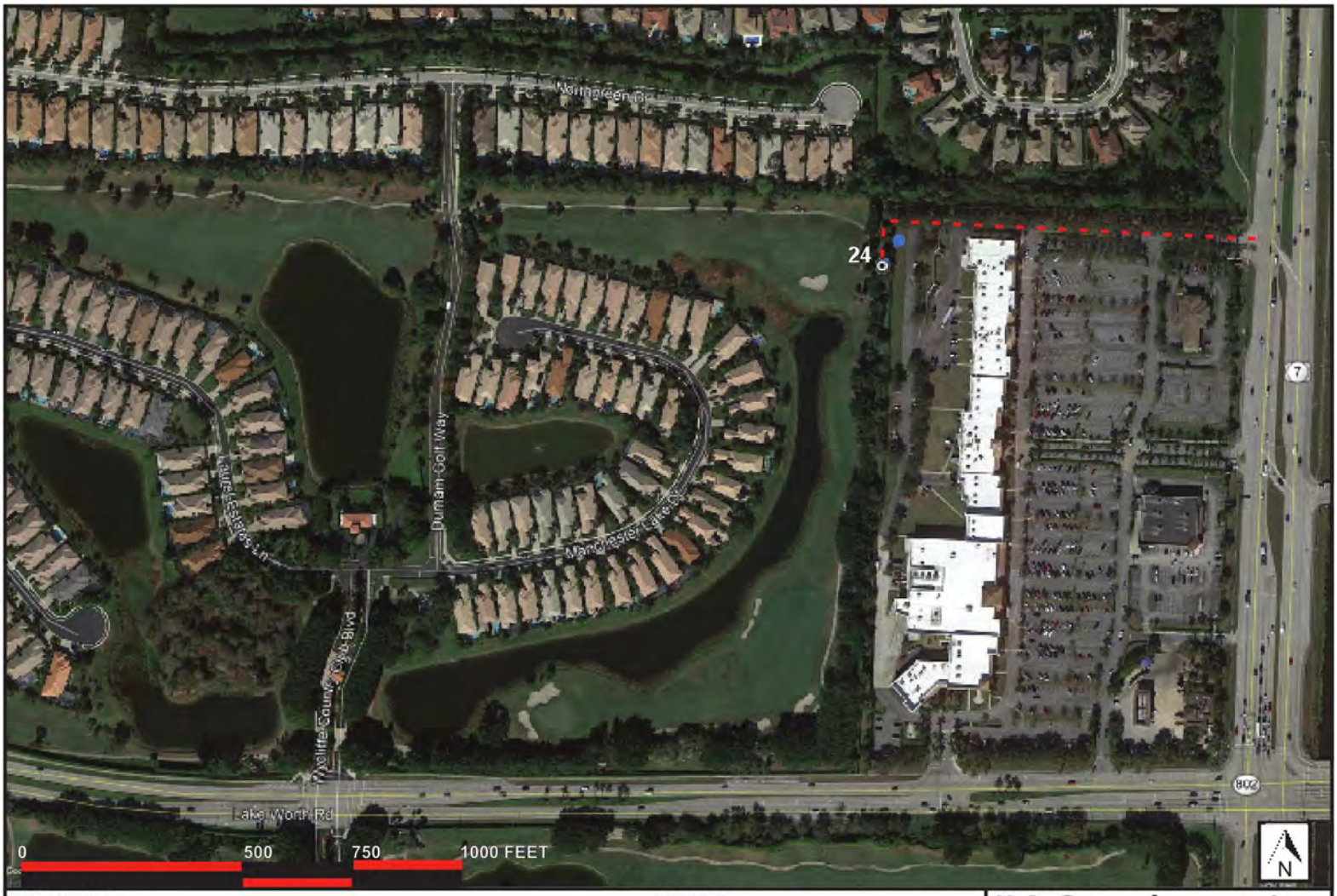


FIGURE TITLE:

Village of Wellington
Surficial Aquifer Production Well Rehabilitation
and Maintenance Project

LEGEND:

- Well Location
- Egress/Ingress
- Well Discharge Location

**JLA Geosciences, Inc.**

| DATE: | ATTACHMENT: |
|---|---|
| 2/19/2020 | 2F |
| DRAWN BY: CNM | |




FIGURE TITLE:

Village of Wellington
Surficial Aquifer Production Well Rehabilitation
and Maintenance Project

Page 252

LEGEND:

- Well Location
- Egress/Ingress
- Well Discharge Location

**JLA Geosciences, Inc.**

| DATE: 2/19/2020 | ATTACHMENT: 2G |
|---|---|
| DRAWN BY: CNM | |




FIGURE TITLE:

Village of Wellington
Surficial Aquifer Production Well Rehabilitation
and Maintenance Project

Page 253

LEGEND:

⊙ Proposed Well Location

**JLA Geosciences, Inc.**

| DATE: 5/2020 | FIGURE NO.: 2H |
|---|---|
| DRAWN BY: RKS | |

**EXHIBIT "D"**
PAYMENT AND PERFORMANCE BOND FORMS

BOND NO:_____

FORM OF PAYMENT BOND

BY THIS BOND, We _____, as Principal, hereinafter called CONTRACTOR, and _____, as Surety, are bound to the Village of Wellington, as Obligee, hereinafter called "VILLAGE"; in the amount of _____Dollars ($ _____) for the payment whereof CONTRACTOR and Surety bind themselves, their heirs, executors, administrators, successors and assigns, jointly and severally.

WHEREAS, CONTRACTOR has by written agreement entered into a Contract on the _____day of _____, 20___, with the VILLAGE, Contract Number: _____("Contract") for the **Wellfield Rehabilitation, Maintenance and New Construction**. which Contract is by reference incorporated herein and made a part hereof, and specifically includes provision for liquidated damages and other damages;

THE CONDITION OF THIS BOND is that if CONTRACTOR:

1. Pays VILLAGE all losses, liquidated damages, expenses, costs and attorney's fees including appellate proceedings, that VILLAGE sustains because of default by CONTRACTOR under the Construction Contract; and

2. Promptly makes payments to all claimants as defined by Florida Statute 255.05(1) for all labor, materials and supplies used directly or indirectly by CONTRACTOR in the performance of the Construction Contract;

THEN CONTRACTOR'S OBLIGATION SHALL BE VOID; OTHERWISE, IT SHALL REMAIN IN FULL FORCE AND EFFECT SUBJECT, HOWEVER, TO THE FOLLOWING CONDITIONS:

2.1. A claimant, except a laborer, who is not in privity with CONTRACTOR shall, within forty-five (45) days after beginning to furnish labor, materials, or supplies for the prosecution of the work, furnish to CONTRACTOR a notice that he intends to look to the bond for protection.

2.2. A claimant who is not in privity with CONTRACTOR and who has not received payment for its labor, materials, or supplies shall, within ninety (90) days after performance of the labor or after complete delivery of the materials or supplies, deliver to CONTRACTOR and to the Surety, written notice of the performance of the labor or delivery of the materials or supplies and of the nonpayment.

2.3. No action for the labor, materials, or supplies may be instituted against CONTRACTOR or the Surety unless the notices stated under the preceding conditions (2.1) and (2.2) have been given.

2.4. Any action or claim under this Bond must be instituted in accordance with the Notice and Time Limitations provisions prescribed in Section 255.05(2), Florida Statutes.

Any changes in or under the Contract Documents and compliance or noncompliance with any formalities connected with the Construction Contract or the changes does not affect the Surety's obligation under this Bond.

**DEFINITIONS**

Contract: For purposes of this Bond, the Contract is the entire integrated agreement between the Village and the Contractor, which includes the Agreement and other documents incorporated therein and all Contract Documents and the changes thereto.

Signed and sealed this _____ day of _____, 20___.

ATTEST:

_____
(Secretary)

CORPORATE SEAL

CONTRACTOR

_____
(Name of Corporation)

By:_____
(Signature)

_____
(Print Name and Title)

_____day of _____, 20__.

IN THE PRESENCE OF:

_____

_____

_____

SURETY COMPANY:

By:_____

Print Name:_____

Address:_____
(Street)

_____
(City, State and Zip Code)

Telephone No:_____

CERTIFICATE AS TO CORPORATE PRINCIPAL

I, _____, certify that I am the Secretary of the corporation named as Principal in the foregoing Performance and Payment Bonds; that _____, who signed the Bond(s) on behalf of the Principal, was then _____ of said corporation; that I know his/her signature; and his/her signature thereto is genuine; and that said Bond(s) was (were) duly signed, sealed and attested to on behalf of said corporation by authority of its governing body.

_____
Secretary (on behalf of) (SEAL)

_____
Corporation

STATE OF FLORIDA )
) SS
COUNTY OF PALM BEACH )

The foregoing instrument was acknowledged before me by means of ☐ physical presence or ☐ online notarization, this ___ day of _____, 20____ by _____ as _____(INSERT TITLE), of _____ [INSERT NAME OF ENTITY – ie: corporation, limited liability company, etc.), (insert status ie: a corporation existing under the laws of the State of _____), ☐ who is personally known to me or ☐ who has produced as identification Driver's License # _____ or (other identification) (describe) _____.

My commission expires:

_____
Notary Public, State of Florida

_____ Bonded

By:_____

PERFORMANCE BOND

BOND NO:_____ AMOUNT:_____

KNOW ALL MEN BY THESE PRESENTS, that we, _____a Corporation, as Principal (hereinafter called Contractor), whose principal business address and telephone number is _____ and _____ organized and existing under and virtue of the laws of the State of Florida, as Surety (hereinafter called Surety), and authorized to transact business within the State of Florida, whose principal business address and telephone number is _____, are held and firmly bound unto the Village of Wellington, a Municipality of the State of Florida, as OBLIGEE (hereinafter called the Village or Obligee), in the sum of _____Dollars ($_____), lawful money of the United States of America, for the payment of which, well and truly be made to the VILLAGE, the Contractor and the Surety bind themselves and each of their heirs, executors, administrators, personal representatives, successors, and assigns, jointly and severally, firmly by these presents as follows:

WHEREAS, the CONTRACTOR has executed and entered into a Contract, dated the _____ day of _____, 20__, with VILLAGE, Contract Number: _____ ("Contract"), **Wellfield Rehabilitation, Maintenance and New Construction**. ("Project")which is by reference incorporated herein and made a part of this Bond as fully and completely as if set forth herein;

THE CONDITION OF THE ABOVE OBLIGATION IS SUCH THAT IF CONTRACTOR:

1. In all respects fully, promptly and faithfully complies with the terms and conditions of the Contract; and

2. Indemnifies and saves harmless the above VILLAGE against and from all costs, expenses, damages including liquidated damages, attorney's fees, including appellate proceedings, injury, or loss to which said VILLAGE may be subject by reason of any wrong doing, misconduct, want of care or skill, negligence, failure to complete within the prescribed time, failure to petition within the prescribed time, or default, including patent infringements, on the part of said CONTRACTOR, its agents or employees, in the execution or performance of said Contract; and

3. Performs the guarantee and warranty of all work and materials furnished under the Construction Contract for the time specified in the Contract;

THEN THIS BOND IS VOID; OTHERWISE IT WILL REMAIN IN FULL FORCE AND EFFECT for the term of the Contract, including any and all warranty periods as specifically mentioned in said Contract.

By incorporating the Contract into its Performance Bond, the Surety agrees that if the Contractor or any party for whom the Contractor is responsible fails to perform any of its obligations pursuant to the Contract, then Surety will be liable to VILLAGE for all damages VILLAGE may sustain and be entitled to in law and pursuant to the Contract. The VILLAGE shall simply give the Surety the same notices that VILLAGE shall be required to give to Contractor of Contractor's Default(s) pursuant to the Contract to trigger Surety's liability. The VILLAGE will not be required to terminate the Contractor to trigger the Surety's liability for the Contractor's Defaults.

The Surety is also obligated to the VILLAGE without duplication for:

1. The responsibilities of the Contractor for correction of defective or deficient work, materials, and completion of the Contract, including all punch list work, the performance of all warranty and guarantee obligations, including those which arise subsequent to substantial and final completion of the Contract,
2. Additional legal, design professional and delay costs resulting from the Contractor's Default, and resulting from the actions or failure to act pursuant to this Bond, and
3. Liquidated damages, or if no liquidated damages are specified in the Contract, actual damages caused by delayed performance or non-performance by the Contractor.

After notice by the VILLAGE of a Contractor Default, the Surety shall be deemed to be in default on this Bond if the Surety fails to take appropriate action to cure the Contractor's Default within fifteen (15) days after receipt of the written default notice from the VILLAGE to the Surety demanding that the Surety perform Contractor's obligations. Should the Surety not take reasonable action to cure the default within fifteen (15) days the VILLAGE shall be entitled to all damages as set forth herein or in the Construction Contract and enforce any other remedy available to the VILLAGE.

The Surety for value received hereby stipulates and specifically agrees that no change involving any extension of time, or alteration or addition to the terms of the Construction Contract or to the Work to be performed, or materials, equipment or supplies to be furnished thereunder, or in the Plans, Drawings and Specifications accompanying the said Construction Contract shall affect the said Surety's obligation under this Bond and the said Surety does hereby waive notice of any such changes, extensions of time, alterations or additions to the terms of the Construction Contract or to the Work, or to the Plans, Drawings and Specifications or any other changes, compliance or noncompliance to the terms of the Construction Contract or to the work or to the Specifications.

**DEFINITIONS**

Contract: For purposes of this Bond, the Contract is the entire integrated agreement between the VILLAGE and the Contractor, which includes the Agreement and other documents incorporated therein and all Contract Documents and the changes thereto.

Contractor Default: Failure of the Contractor, which has not been remedied, to perform or otherwise to comply with the Construction Contract.

IN WITNESS WHEREOF, the above parties bound together have executed this instrument this ___ day of _____, 20___, with the name and corporate seal of each corporate party being hereto affixed and those presents duly signed by its undersigned representative, pursuant to the authority of its governing body.

CONTRACTOR (Principal)

_____
(Typed Name of Contractor)

ATTEST:

By:_____
(Signature of Officer)

(SEAL)

_____
(Typed Name and Title)

SURETY

_____
(Typed Name of Surety)

_____
(Florida Resident Agent)

By:_____
(Signature of Attorney-in-fact. Attach Power of Attorney)

STATE OF FLORIDA
_____ COUNTY

The foregoing instrument was acknowledged before me by means of ☐ physical presence or ☐ online notarization, this ___ day of _____, 20____ by _____ as _____(INSERT TITLE), of _____ [INSERT NAME OF ENTITY – ie: corporation, limited liability company, etc.), (insert status ie: a corporation existing under the laws of the State of _____), ☐ who is personally known to me or ☐ who has produced as identification Driver's License # _____ or (other identification) (describe) _____.

_____ _____ _____
Notary Public, State of Florida My commission expires Stamp

IMPORTANT: Surety companies executing this Bond must appear on and have sufficient bonding capacity per the Treasury Department's most current list (circular 570 as amended) and be authorized to transact business in the State of Florida.

**Council**
Anne Gerwig, Mayor
Tanya Siskind, Vice Mayor
John T. McGovern, Councilman
Michael Drahos, Councilman
Michael J. Napoleone, Councilman

**Manager**
Paul Schofield

**EXHIBIT "E'**
**NOTICE OF AWARD**

December 9, 2020

# NOTICE OF AWARD

Pursuant to Wellington, notice is provided as follows:

Reference –
**INVITATION TO BID (ITB) # 202034 – Wellfield Rehabilitation, Maintenance and New Construction**

On December 8, 2020, Wellington awarded the referenced contract to the following:

**All Webbs Enterprises, Inc.**
**Florida Design Drilling Corporation**

# SALES TAX RECOVERY PROGRAM SPECIAL CONDITIONS FOR OWNER FURNISHED MATERIALS AND EQUIPMENT

During the course of this Project, Wellington (hereinafter referred to as "Owner") may issue a Change Order or Change Orders to delete from the contract certain items that the Owner desires to purchase directly and furnish to Contractor for use in the Project. Contractor agrees that if Owner desires to issue such Change Order(s), Contractor will assist the Owner in identifying appropriate materials and equipment to be included in the Change Order(s), will execute such Change Order(s) and will participate in this tax savings program at no additional cost to the Owner. Furthermore, Contractor agrees to abide by and comply with the following Special Conditions.

1. Sales and Use Taxes. The Owner is exempt from paying sales and use taxes on materials and equipment purchased for, and incorporated into **Wellfield Rehabilitation, Maintenance and New Construction.,** Bid No. **202034,** (hereinafter the "Project"). The Owner shall make direct purchases of all materials and equipment purchased for, or to be incorporated into the Project, as agreed to by the Contractor and agreed upon by the Owner in the form of a Change Order. All direct purchases of materials and equipment shall be made by the Owner with funds specifically allocated for the construction of the Project. Material suppliers shall be competitively bid by the Contractor and its subcontractors. The Contractor shall include the price for all construction materials in its bid. The Contractor shall provide the Owner a list of all intended suppliers, vendors, etc. for consideration as Owner Purchased Materials. This list shall be submitted at the same time as the preliminary schedule of values. The Contractor shall submit price quotes from the vendors, as well as a description of the materials to be supplied, estimated quantities and prices and as provided below. The Contractor shall notify the Owner no later than **10 calendar days** after request by Owner of the requested materials and equipment to be purchased by the Owner for the Project. The standard Owner Terms and Conditions applicable to this program are included as Attachment A to this section. Each equipment supplier of equipment to be provided under the Sales Tax Recovery Program shall be obligated to meet the requirements of the Owner of Wellington Terms and Conditions and the Project Technical Specifications.

1.1 The Contractor shall: (a) compile Contractor's and any Subcontractors' itemized requirement for materials and equipment, including quantities, unit costs, manufacturers' or vendors' catalogue or order numbers, delivery instructions, and other specific terms and information that are required to order the specific materials and equipment, and terms and conditions to be imposed on suppliers regarding delivery and submittal time requirements, and quantities thereof required by Contractor or Subcontractors in accordance with the applicable requirements of the Construction Contract, from time to time, during the construction of the Project, as materials and equipment need to be ordered for the Project, and submit such compilation to the Owner: (b) prepare a requisition for such materials and equipment on the Owner's form of requisition: and (c) deliver any such requisition to the Owner no less than thirty (30) days prior to the date the manufacturer or vendor of the materials or equipment, as the case may be, requires orders for such materials or equipment to be placed to assure delivery of such materials or equipment to the Site in accordance with the Project Schedule (the "Order Date"). The requisition shall identify the Order Date. . The Owner shall issue a Purchase Order directly to the vendor of the materials or equipment, prior to the Order Date (a Purchase Order). The Owner shall include with any such Purchase Order, a copy of the Owner's sales and use tax exemption certificate and a copy of the Owner's Certificate of Entitlement required under F.A.C. Rule 12A-1.094(4)(c). The Owner shall make direct payment to the vendor from the Owner's account.

1.2 The Contractor, upon the delivery of any such materials or equipment, shall verify the conformity of such materials or equipment with the terms of the Purchase Order and the Contract Documents. If the Contractor determines that the materials and equipment are conforming, the Owner shall take title and possession of such material and equipment before such materials and equipment are incorporated into the Project. If the Contractor determines that the materials and equipment are non-conforming, the Contractor shall immediately notify the Owner in writing and the Owner shall reject such material and equipment.

1.3 The Owner shall assume all risk of loss on all materials and equipment purchased pursuant to its sales and use tax exemption, subject to the provisions of section 1.10 below. The Owner shall maintain Builder's Risk Insurance for the full insurable value for all materials and equipment purchased as a result of the Owner Sales Tax Recovery Program herein. This coverage shall be in addition to all other coverage required in Section 1.11 below or as otherwise provided in these Contract Documents.

1.4 To the extent that materials and equipment are purchased pursuant to the Owner's sales and use tax exemption, the Contractor shall reduce the Contract Amount and the penal sum of its public construction bond by 1.06 times the cost of the materials and equipment purchased directly by the Owner.

1.5 The Contractor shall be fully responsible for all matters relating to the receipt of materials and equipment furnished by the Owner in accordance with this Special Condition, including, but not limited to, the responsibility for verifying correct quantities, verifying documents or orders in a timely manner, coordinating purchases, providing and obtaining all warranties and guarantees required by the Contract Documents, inspection and acceptance of the materials and equipment at the time of delivery, and loss or damage to materials and equipment following acceptance of items due to the negligence of such Contractor or any Subcontractors or other party. The Contractor shall coordinate delivery schedules, sequence of delivery, loading orientation, and other arrangements normally required by such Contractor for the particular materials and equipment furnished. The Contractor shall provide or arrange for all services required for the unloading, handling and storage of such materials and equipment through installation.

1.6 The Contractor shall visually inspect all shipments from material and equipment vendors purchased directly by the Owner in accordance with this Special Condition (the "Owner Furnished Materials") and approve the vendors' invoices for materials or equipment delivered, as Owner Furnished Materials are furnished to the Site in accordance with this Special Condition. The Contractor shall assure that each delivery of the Owner Furnished Materials is accomplished by documentation adequate to identify the Purchase Order against which the purchase is made. This documentation may consist of a delivery ticket and an invoice from the vendor conforming to the Purchase Order, together with such additional information as the Owner may require. The Contractor shall deliver to the Owner all invoices for materials and equipment upon verification by such Contractor that the materials and equipment conform exactly to the Contract Documents and the Purchase Order. Upon receipt of any invoice for Owner Furnished Materials, the Owner shall accept such materials and deliver such invoice to the Owner for payment directly to the vendor.

1.7 The Contractor shall inspect all Owner Furnished Materials to determine that such Owner Furnished Materials conform to the Contract Documents, including the Drawings and Specifications, and to determine prior to incorporation into the Work whether any such Owner Furnished Materials are patently defective, and whether such Owner Furnished Materials are identical to the materials ordered and match the description of the bill of lading and the Purchase Order. If Contractor discovers defective or non-conforming Owner Furnished Materials upon such visual inspection, Contractor shall: (1) not recommend acceptance of such non-conforming materials and equipment, (b) not utilize such non-conforming or defective materials in the Work; (c) not allow Subcontractor to utilize such non-conforming or defective materials in the Work; and (d) promptly notify the Owner, in writing, of the defective or non-conforming condition so that repair or replacement of those Owner Furnished Materials can occur without any undue delay or interruption to the Project. In the event that such Contractor fails to perform such inspection or otherwise incorporates into the Work such defective or non-conforming Owner Furnished Materials, the Contractor shall be responsible for the repair and replacement of defective or non-conforming materials, at its sole cost and expense.

1.8 The Contractor shall maintain written and detailed records of all Owner Furnished Materials incorporated into the Work from the stock of Owner Furnished Materials. The Contractor shall account monthly to the Owner for any Owner Furnished Materials delivered to the Site, indicating which Owner Furnished Materials have been incorporated into the Work.

1.9 The Contractor shall be responsible for obtaining and managing all warranties and guarantees for all Owner Furnished Materials. All repair, maintenance or damage-repair calls shall be forwarded by the Owner to the Contractor for resolution with the appropriate vendor, supplier or Subcontractor. The Contractor warrants represents and covenants that it shall be responsible for all warranties and guarantees of the Owner Furnished Materials.

1.10 After the Owner takes possession of the Owner Furnished Materials at the Site, possession of the Owner's Furnished Material shall immediately and automatically transfer to the Contractor without notice. The transfer of possession of Owner Furnished Materials from the Owner to the Contractor shall constitute a bailment for the mutual benefit of the Owner and such Contractor. The Owner shall be considered the bailor and such Contractor the bailee of the Owner Furnished Materials. Owner Furnished Materials shall be considered returned to the Owner for purposes of their bailment at such time as they are incorporated into the Project or consumed in the process of completing the Project and they are accepted in writing by the Owner upon final completion and acceptance of the Project by the Owner.

1.11 The Contractor shall purchase and maintain Builder's Risk Insurance sufficient to protect against loss of or damage to Owner Furnished Materials. Such insurance shall cover the full value of any Owner Furnished Materials between the time the Owner and or Contractor or its agents first takes title to and possession of any of such Owner Furnished

Materials until final completion of the Work. The Contractor shall also maintain any other insurance with such deductible amounts that the Owner deems necessary as it relates to the Owner Furnished Materials.

1.12 The Owner shall not be liable for any interruption or delay damages in the Project by virtue of ordering the Owner Furnished Materials, for any defects or other problems with the Project by virtue of ordering the Owner Furnished Materials, or for any extra costs resulting from any delay in the delivery of, or defects in, the Owner Furnished Materials.

1.13 The Contractor, on a monthly basis, shall review invoices submitted by all vendors of Owner Furnished Materials delivered to the Site during the prior month and either concur or object to the Owner's issuance of payment to the vendors, based upon such Contractor's records of materials delivered to the Site and whether any of the Owner Furnished Materials for which payment has not been made were either non-conforming or defective.

1.14 In order to arrange for the prompt payment to the vendor, the Contractor shall provide to the Owner a list of the acceptance of the goods or materials within fifteen (15) days of receipt of said goods or materials. Accompanying the list shall be a copy of the applicable Purchase Order, invoices, delivery tickets, written acceptance of the delivered items, and such other documentation as may be reasonably required by the Owner. Upon receipt of the appropriate documentation, the Owner shall prepare a check payable to the vendor based upon the receipt of data provided. This check will be released, delivered and remitted directly to the vendor. The Contractor shall assist the Owner to immediately obtain partial or final release of waivers as appropriate. The Owner shall not make any payment without the appropriate Contractor's concurrence and approval, which shall be delivered to the Owner. There shall be no retention on Owner Furnished Materials against either the vendor, the Contractor(s) or the Subcontractor(s).

1.15 The Contractor and or/the Owner may, in its or their reasonable discretion, require certain material and equipment vendors to provide a supply bond in the amount of one-hundred percent (100%) of the Purchase Order price. The supply bond, if required, shall be issued by a qualified surety company authorized to do business in the State of Florida and acceptable to the Owner. If the supply bond is required, the costs thereof will be added to the amount of the Purchase Order. The Contractor shall verify that a vendor can furnish a supply bond. All bonds will name the Owner and the Contractor as additional obligees.

**Terms and Conditions (Attachment A).**

The following Terms and Conditions are applicable to this order entered into by and between the Village of Wellington (referred to hereafter as Buyer) and Vendor (referred to as Seller).

2.1 Seller's acceptance of this order will be presumed unless Seller acknowledges exception, in writing, to Buyer within ten (10) calendar days after date of order.

2.2 Sellers doing business with the Buyer are prohibited from discriminating against any employee, applicant, or client because of race, color, religion, disability, sex, age, national origin, ancestry, marital status, or sexual orientation with regard to but not limited to the following employment practices, rates of pay or other compensation methods, and training selection.

2.3 Any assignment of this order, performance of work hereunder, in whole or in part, or monies due or to become due hereunder, shall be void unless consented to by Buyer in writing and Buyer shall have no obligations to any assignee of Seller under any assignment not consented to in writing by Buyer.

2.4 In the event of default by the Seller, Buyer may procure the articles or services covered by this order from other sources and hold the seller responsible for any excess costs occasioned thereby.

2.5 Deliveries are to be made during hours 8:00 a.m. to 5:00 p.m., Monday through Friday, excluding holidays, unless otherwise stipulated. Seller shall notify the Buyer of deliveries that require special handling and/or assistance for off-loading. Failure to notify the Buyer concerning this type of delivery will result in the billing to Seller of any add-on re-delivery, storage, or handling charges.

2.6 The Buyer may grant additional time for any delay or failure to perform hereunder if the delay will not adversely impact the best interest of the Buyer and is due to causes beyond the control of the Seller. Such grant must be in writing and made part of the order.

2.7 In those cases where prices stated are not F.O.B. Destination, Seller is required to prepay charges and list on invoices.

2.8 To the extent authorized by law, Seller shall indemnify, save and hold harmless the Buyer, its employees and agents against any and all claims, damages, liability and court awards including costs, expenses and attorney fees incurred as a result of any act or omission by the Seller, or its employees, agents, subcontractors of assignees pursuant to the terms of this order.

2.9 All Commodities delivered on this order are subject to inspection upon receipt by a representative of the Buyer. All rejected commodities shall remain the property of the Seller and will be returned at the Seller's expense.

2.10 Seller must render original invoice to the Buyer, Attention "Project Manager, 12300 Forest Hill Blvd., Wellington, FL 33414"

2.11 By accepting this order, Seller understands and agrees that the items covered herein, or services to be rendered, shall be manufactured, sold or performed in compliance with applicable Federal, State, County and Local laws, ordinances, rules, codes and regulations. Lack of knowledge by the Seller shall in no way be a cause for relief from responsibility.

2.12 Seller shall save and hold harmless the Buyer, its employees and agents from liability for infringement of any United States patent, trademark or copyright trademark or copyright for or on account of the use of any product sold to Buyer or used in the performance of this order.

2.13 No modifications of this order shall be binding upon Buyer unless approved by an authorized representative of Buyer's Purchasing Office.

2.14 Seller compliance required under Chapter 442, Florida Statutes, that any toxic substance delivered as a part of this order must be accompanied by a Material Safety Data Sheet (MSDS).

2.15 Order Number must appear on all invoices, packing slips, shipping notices, freight bills, and correspondence concerning this order.

2.16 Payments will be made only to the company and address as set forth on order unless the Seller has requested a change thereto on official company letterhead, signed by an authorized officer of the company.

2.17 No endorsement by the Buyer of the product and/or service will be used by Seller in any way, manner or form in product literature or advertising.

2.18 Quantities specified in the order cannot be changed without Buyer's prior written approval. Goods shipped in excess of quantity designated may be returned at Seller's expense.

2.19 All parties to this order agree that the representatives named herein are, in fact, bona fide and possess full and complete authority to bind said parties.

2.20 Responsibility will not be accepted for any goods delivered or services performed unless covered by a duly authorized Buyer Purchase Order.

2.21 The Buyer of Wellington is exempt from Federal and State taxes for tangible personal property. Sellers doing business with the Buyer shall not be exempt from paying sales tax to their suppliers for materials to fulfill contractual obligations with the Buyer, nor shall any Seller be authorized to use the Buyer's Tax Exemption Number in securing such materials.

2.22 Buyer reserves the right to terminate this order in whole or in part for default (a) if Seller fails to perform in accordance with any of the requirements of this order or (b) if Seller becomes insolvent or suspends any of its operations or if any petition is filed of proceeding commenced by or against Seller under any State or Federal law relating to bankruptcy, arrangement, reorganization, receivership or assignment for the benefit of creditors. Any such termination will be without liability to Buyer except for completed items delivered and accepted by the Buyer. Seller will be liable for excess cost of re-procurement.

2.23 By accepting this order, the Seller agrees that payment terms shall be in accord with the Florida Prompt Payment Act, Florida Statute 218.70, *et seq*.

2.24 No provision of Seller's agreement to supply the ordered goods, equipment, or materials shall in any way limit Seller's liability for damages caused by defects in the materials incorporated in, nor the design or manufacture of, Seller's equipment, goods, or materials. Seller's agreement shall not include any provision requiring the Buyer to pay Seller's attorney's fees in any dispute or claim arising out of this Purchase Order.

2.25 The Uniform Commercial Code (Florida Statutes, Chapter 672) shall prevail as the basis for contractual obligations between the Seller and Buyer for any terms and conditions not specifically stated in this order.

2.26 Any and all legal actions arising from or necessary to enforce this contract will be held in Palm Beach County, Florida and the service of process and interpretation of contractual obligation shall be in accordance with the laws of the State of Florida.

2.27 Seller acknowledges that the materials being ordered are for incorporation into the Project for Buyer pursuant to a contract with a contractor. Seller agrees that it shall warrant its goods, equipment, or materials being ordered herein in compliance with Seller's normal warranties, or in compliance with the warranty provisions of the construction contract, the terms of which are incorporated herein, whichever warranty provides the Buyer with the greatest protection. Regardless of the forgoing all warranties shall be in accordance with the contract documents to which Contractor is bound with the buyer.

END OF SECTION

**EXHIBIT "G"**
**CONTRACTOR'S SCHEDULE OF VALUES**

Florida Design Drilling Corporation

SCHEDULE OF VALUES

The Schedule of Values have been developed to allow the OWNER to evaluate the bids. The OWNER shall use the individual unit costs for each scope of work and does not guarantee that estimated quantities shown will be utilized in full. The OWNER shall utilize all or some of these items for each scope of work as the OWNER deems necessary.

| ITEM NO. | DESCRIPTION | ESTIMATED QUANTITY | UNIT | UNIT PRICE | TOTAL PRICE |
|---|---|---|---|---|---|
| 1 | Bonds and Insurance | 1 | LS | $40,000.00 | $40,000.00 |
| 2 | Indemnification | 1 | LS | $100.00 | $100.00 |
| 3 | General Conditions | 1 | LS | $160,000.00 | $160,000.00 |
| 4 | Major Mobilization/Demobilization | 11 | EA | $7,500.00 | $82,500.00 |
| 5 | Minor Mobilization/Demobilization | 41 | EA | $2,500.00 | $102,500.00 |
| 6 | Remove Pump/Motor and Discharge Apparatus | 16 | EA | $2,500.00 | $40,000.00 |
| 7 | Install Pump/Motor and Discharge Apparatus | 16 | EA | $2,500.00 | $40,000.00 |
| 8 | Pump/Motor Retrieval | 1 | EA | $5,000.00 | $5,000.00 |
| 9 | Well Acidization Setup | 2 | EA | $20,000.00 | $40,000.00 |
| 10 | Well Acidization Treatment with 32% HCL | 2,000 | GL | $5.00 | $10,000.00 |
| 11 | Brushing and Swabbing of Well Screen/Riser/Casing | 3 | EA | $2,500.00 | $7,500.00 |
| 12 | Fill and Compaction of Site Voids | 1 | EA | $10,000.00 | $10,000.00 |
| 13 | 6-inch Diameter Profile Well Drilling, Sampling, Abandonment | 1 | EA | $20,000.00 | $20,000.00 |
| 14 | Furnish, install and grout in place 30-inch diameter steel surface casing to 30 feet | 30 | LF | $500.00 | $15,000.00 |
| 15 | Drill nominal 28-inch diameter borehole using mud rotary method | 70 | LF | $175.00 | $12,250.00 |
| 16 | Drill nominal 22-inch diameter borehole using reverse air method | 50 | EA | $150.00 | $7,500.00 |
| 17 | Remove Existing Well Screen and Riser Casing | 4 | EA | $35,000.00 | $140,000.00 |
| 18 | Clean Out Open Borehole to Total Depth | 4 | EA | $7,500.00 | $30,000.00 |
| 19 | Remove surface casing, outer casing, inner casing using overdrill method, backfill borehole with gravel | 1 | EA | $35,000.00 | $35,000.00 |
| 20 | Furnish and Install 24-inch schedule 40 PVC well casing | 200 | LF | $150.00 | $30,000.00 |
| 21 | Grout 24-inch schedule 40 PVC well casing in place | 400 | 94 LB SACK | $25.00 | $10,000.00 |
| 22 | Furnish and Install 16-inch diameter stainless steel well screen | 200 | LF | $250.00 | $50,000.00 |
| 23 | Furnish and Install 16-inch diameter SDR17 PVC riser casing | 400 | LF | $100.00 | $40,000.00 |
| 24 | Furnish and Install 12-inch diameter stainless steel well screen | 50 | LF | $200.00 | $10,000.00 |
| 25 | Furnish and Install 12-inch diameter SDR17 PVC riser casing | 100 | LF | $100.00 | $10,000.00 |
| 26 | Furnish and Install well gravel pack | 2,700 | CF | $25.00 | $67,500.00 |
| 27 | Squeeze Grout | 1 | EA | $20,000.00 | $20,000.00 |
| 28 | Airlift Development | 500 | HR | $200.00 | $100,000.00 |
| 29 | Jetting with Simultaneous Airlift Development | 1,000 | HR | $250.00 | $250,000.00 |

| ITEM NO. | DESCRIPTION | ESTIMATED QUANTITY | UNIT | UNIT PRICE | TOTAL PRICE |
|---|---|---|---|---|---|
| 30 | Pump Development | 1,500 | HR | $250.00 | $375,000.00 |
| 31 | Step-Rate Testing | 80 | HR | $250.00 | $20,000.00 |
| 32 | Well Disinfection | 40 | EA | $1,000.00 | $40,000.00 |
| 33 | Bacteriological Sampling and Clearance | 40 | EA | $150.00 | $6,000.00 |
| 34 | Video Logging (static and dynamic) | 20 | EA | $2,000.00 | $40,000.00 |
| 35 | Geophysical Logging (Static and dynamic flow, Caliper, Gamma Ray, Dual Induction) | 3 | EA | $5,000.00 | $15,000.00 |
| 36 | Geophysical Logging (Caliper only) | 3 | EA | $1,500.00 | $4,500.00 |
| 37 | Formation Water Disposal System | 10 | EA | $7,500.00 | $75,000.00 |
| 38 | Well Abandonment | 1 | EA | $10,000.00 | $10,000.00 |
| 39 | Major Site Restoration | 11 | EA | $2,500.00 | $27,500.00 |
| 40 | Minor Site Restoration | 36 | EA | $500.00 | $18,000.00 |
| 41 | Extra Work by Drilling Crew with Drilling Equipment | 20 | HR | $500.00 | $10,000.00 |
| 42 | Extra Work by Drilling Crew with Other Equipment | 20 | HR | $350.00 | $7,000.00 |
| 43 | Extra Work by Drilling Crew without Drilling Equipment | 20 | HR | $250.00 | $5,000.00 |
| 44 | Standby Time, Rig and Crew onsite | 20 | HR | $100.00 | $2,000.00 |
| 45 | Standby Time, Rig and Crew offsite | 20 | HR | $5.00 | $100.00 |
| 46 | Machine Shop Welding | 20 | HR | $125.00 | $2,500.00 |
| 47 | Onsite Welding | 20 | HR | $150.00 | $3,000.00 |
| 48 | Furnish & Install 1" PVC Stilling Well - 60' to 80' | 10 | EA | $500.00 | $5,000.00 |
| 49 | Furnish & Install new SS Safety Cables - 60' to 80' | 10 | EA | $500.00 | $5,000.00 |
| 50 | Pump Maintenance | 150 | HR | $100.00 | $15,000.00 |
| 51 | Motor Maintenance | 150 | HR | $100.00 | $15,000.00 |
| 52 | Unidentified Parts Allowance | 1 | LS | $2,500.00 | $2,500.00 |
| 53 | Maintenance of Traffic | 2 | EA | $1,000.00 | $2,000.00 |

| TOTAL | Two million eighty nine thousand nine hundred fifty dollars 00/100 | $2,089,950.00 |
|---|---|---|

BIDDER/CONTRACTOR understands and agrees that this is Unit Price Contract and that contractor will be paid based upon items and quantities actually performed and accepted by Owner. The Schedule of Values is provided for the purpose of Bid Evaluation and when initiated by Wellington, the pricing of change orders.

Quantities listed on the Schedule of Values are estimates only and are not to be construed as guaranteed work quantities. Bids will be evaluated based upon the total contract price. Balance of pricing shall be considered by OWNER in determining lowest, responsive, responsible bidders. CONTRACTORS/BIDDERS shall submit balanced bids. In order to meet the needs and the best interest of the Village of Wellington, awards may be made to multiple qualified vendors.

EXHIBIT “H”

CERTIFICATE(S) OF INSURANCE

FLORDES-01 ADYER

# CERTIFICATE OF LIABILITY INSURANCE

DATE (MM/DD/YYYY) 12/22/2020

THIS CERTIFICATE IS ISSUED AS A MATTER OF INFORMATION ONLY AND CONFERS NO RIGHTS UPON THE CERTIFICATE HOLDER. THIS CERTIFICATE DOES NOT AFFIRMATIVELY OR NEGATIVELY AMEND, EXTEND OR ALTER THE COVERAGE AFFORDED BY THE POLICIES BELOW. THIS CERTIFICATE OF INSURANCE DOES NOT CONSTITUTE A CONTRACT BETWEEN THE ISSUING INSURER(S), AUTHORIZED REPRESENTATIVE OR PRODUCER, AND THE CERTIFICATE HOLDER.

IMPORTANT: If the certificate holder is an ADDITIONAL INSURED, the policy(ies) must have ADDITIONAL INSURED provisions or be endorsed. If SUBROGATION IS WAIVED, subject to the terms and conditions of the policy, certain policies may require an endorsement. A statement on this certificate does not confer rights to the certificate holder in lieu of such endorsement(s).

PRODUCER
CAL Risk Management
23 Eganfuskee Street
Suite 102
Jupiter, FL 33477

CONTACT NAME: Suzanne Nelson
PHONE (A/C, No, Ext): (561) 868-6291 FAX (A/C, No): (561) 427-6730
E-MAIL ADDRESS: Snelson@calllc.com

| INSURER(S) AFFORDING COVERAGE | NAIC # |
|---|---|
| INSURER A : Zurich American Insurance | 16535 |
| INSURER B : Landmark American Ins Co | 33138 |
| INSURER C : Navigators Specialty Insurance Co | 36056 |
| INSURER D : Aspen American Insurance Company | 43460 |
| INSURER E : | |
| INSURER F : | |

INSURED
Florida Design Drilling Corporation
7733 Hooper Rd.
West Palm Beach, FL 33411

**COVERAGES** **CERTIFICATE NUMBER:** **REVISION NUMBER:**

THIS IS TO CERTIFY THAT THE POLICIES OF INSURANCE LISTED BELOW HAVE BEEN ISSUED TO THE INSURED NAMED ABOVE FOR THE POLICY PERIOD INDICATED. NOTWITHSTANDING ANY REQUIREMENT, TERM OR CONDITION OF ANY CONTRACT OR OTHER DOCUMENT WITH RESPECT TO WHICH THIS CERTIFICATE MAY BE ISSUED OR MAY PERTAIN, THE INSURANCE AFFORDED BY THE POLICIES DESCRIBED HEREIN IS SUBJECT TO ALL THE TERMS, EXCLUSIONS AND CONDITIONS OF SUCH POLICIES. LIMITS SHOWN MAY HAVE BEEN REDUCED BY PAID CLAIMS.

| INSR LTR | TYPE OF INSURANCE | ADDL INSD | SUBR WVD | POLICY NUMBER | POLICY EFF (MM/DD/YYYY) | POLICY EXP (MM/DD/YYYY) | LIMITS | | |
|---|---|---|---|---|---|---|---|---|---|
| A | X COMMERCIAL GENERAL LIABILITY<br>CLAIMS-MADE X OCCUR<br>GEN'L AGGREGATE LIMIT APPLIES PER:<br>POLICY X PRO-JECT LOC<br>OTHER: | X | | GLO375970903 | 1/1/2021 | 1/1/2022 | EACH OCCURRENCE<br>DAMAGE TO RENTED PREMISES (Ea occurrence)<br>MED EXP (Any one person)<br>PERSONAL & ADV INJURY<br>GENERAL AGGREGATE<br>PRODUCTS - COMP/OP AGG | $<br>$<br>$<br>$<br>$<br>$ | 1,000,000<br>300,000<br>10,000<br>1,000,000<br>2,000,000<br>2,000,000 |
| A | AUTOMOBILE LIABILITY<br>X ANY AUTO<br>OWNED AUTOS ONLY SCHEDULED AUTOS<br>HIRED AUTOS ONLY NON-OWNED AUTOS ONLY | X | | BAP375971003 | 1/1/2021 | 1/1/2022 | COMBINED SINGLE LIMIT (Ea accident)<br>BODILY INJURY (Per person)<br>BODILY INJURY (Per accident)<br>PROPERTY DAMAGE (Per accident)<br>PIP | $<br>$<br>$<br>$<br>$ | 1,000,000<br><br><br><br>10,000 |
| B | UMBRELLA LIAB X OCCUR<br>X EXCESS LIAB CLAIMS-MADE<br>DED X RETENTION $ 0 | | | LHA092420 | 1/1/2021 | 1/1/2022 | EACH OCCURRENCE<br>AGGREGATE | $<br>$<br>$ | 4,000,000<br>4,000,000 |
| A | WORKERS COMPENSATION AND EMPLOYERS' LIABILITY<br>ANY PROPRIETOR/PARTNER/EXECUTIVE OFFICER/MEMBER EXCLUDED? Y / N<br>(Mandatory in NH)<br>If yes, describe under DESCRIPTION OF OPERATIONS below | N / A | | WC375970803 | 1/1/2021 | 1/1/2022 | X PER STATUTE OTH-ER<br>E.L. EACH ACCIDENT<br>E.L. DISEASE - EA EMPLOYEE<br>E.L. DISEASE - POLICY LIMIT | <br>$<br>$<br>$ | <br>1,000,000<br>1,000,000<br>1,000,000 |
| C | Pollution Liability | | | MP21ECP307581IC | 1/1/2021 | 1/1/2022 | Ea Incident $1M/Agg | | 2,000,000 |
| D | Equipment Floater | | | IMZ211521 | 1/1/2021 | 1/1/2022 | Rented/Leased Equip | | 1,500,000 |

DESCRIPTION OF OPERATIONS / LOCATIONS / VEHICLES (ACORD 101, Additional Remarks Schedule, may be attached if more space is required)
**Job: ITB 202034 - Wellfield Rehabilitation, Maintenance and New Construction**
The certificate holder is included as additional insured for ongoing and completed operations on the general liability and on the auto liability when required by written contract. General Liability is primary and non-contributory when required by written contract. Waiver of subrogation applies to General Liability, Auto, and Workers' Compensation when required by written contract. The Excess Liability policy extends over the General Liability, Auto, and Employers Liability coverages per policy forms and conditions. Cancellation applies per policy terms and conditions.

Certificate is expanded to read: Village of Wellington (Owner), Engineer, and their respective officers, directors, members, partners, employees, agents,
SEE ATTACHED ACORD 101

**CERTIFICATE HOLDER**

Village of Wellington
Attn: Clerk's Office
12300 Forest Hill Boulevard
Wellington, FL 33414

**CANCELLATION**

SHOULD ANY OF THE ABOVE DESCRIBED POLICIES BE CANCELLED BEFORE THE EXPIRATION DATE THEREOF, NOTICE WILL BE DELIVERED IN ACCORDANCE WITH THE POLICY PROVISIONS.

AUTHORIZED REPRESENTATIVE




© 1988-2015 ACORD CORPORATION. All rights reserved.
The ACORD name and logo are registered marks of ACORD

AGENCY CUSTOMER ID: FLORDES-01 ADYER

LOC #: 1

# ADDITIONAL REMARKS SCHEDULE



| AGENCY | | NAMED INSURED |
|---|---|---|
| CAL Risk Management | | Florida Design Drilling Corporation<br>7733 Hooper Rd.<br>West Palm Beach, FL 33411<br>Palm Beach |
| POLICY NUMBER | | |
| SEE PAGE 1 | | |
| CARRIER | NAIC CODE | EFFECTIVE DATE: SEE PAGE 1 |
| SEE PAGE 1 | SEE P 1 | |

ADDITIONAL REMARKS

THIS ADDITIONAL REMARKS FORM IS A SCHEDULE TO ACORD FORM,

FORM NUMBER: ACORD 25 FORM TITLE: Certificate of Liability Insurance

Description of Operations/Locations/Vehicles:
consultants, and subcontractors is included as additional insured for ongoing and completed operations on the general liability and on the auto liability when required by written contract. General Liability is primary and non-contributory when required by written contract. Waiver of subrogation applies to General Liability, Auto, and Workers' Compensation when required by written contract. The Excess Liability policy extends over the General Liability, Auto, and Employers Liability coverages per policy forms and conditions. Cancellation applies per policy terms and conditions.



© 2008 ACORD CORPORATION. All rights reserved.

The ACORD name and logo are registered marks of ACORD

# Additional Insured – Automatic – Owners, Lessees Or Contractors

ZURICH

| Policy No. | Eff. Date of Pol. | Exp. Date of Pol. | Eff. Date of End. | Producer No. | Add'l. Prem | Return Prem. |
|---|---|---|---|---|---|---|
| GLO 3759709-03 | 01/01/2021 | 01/01/2022 | | 57072000 | **INCL** | |

**THIS ENDORSEMENT CHANGES THE POLICY. PLEASE READ IT CAREFULLY.**

**Named Insured**:

**Address (including ZIP Code)**:

This endorsement modifies insurance provided under the:

**Commercial General Liability Coverage Part**

**A.** Section **II – Who Is An Insured** is amended to include as an additional insured any person or organization whom you are required to add as an additional insured on this policy under a written contract or written agreement. Such person or organization is an additional insured only with respect to liability for "bodily injury", "property damage" or "personal and advertising injury" caused, in whole or in part, by:

1. Your acts or omissions; or
2. The acts or omissions of those acting on your behalf,

in the performance of your ongoing operations or "your work" as included in the "products-completed operations hazard", which is the subject of the written contract or written agreement.

However, the insurance afforded to such additional insured:

1. Only applies to the extent permitted by law; and
2. Will not be broader than that which you are required by the written contract or written agreement to provide for such additional insured.

**B.** With respect to the insurance afforded to these additional insureds, the following additional exclusion applies:

This insurance does not apply to:

"Bodily injury", "property damage" or "personal and advertising injury" arising out of the rendering of, or failure to render, any professional architectural, engineering or surveying services including:

**a.** The preparing, approving or failing to prepare or approve maps, shop drawings, opinions, reports, surveys, field orders, change orders or drawings and specifications; or

**b.** Supervisory, inspection, architectural or engineering activities.

This exclusion applies even if the claims against any insured allege negligence or other wrongdoing in the supervision, hiring, employment, training or monitoring of others by that insured, if the "occurrence" which caused the "bodily injury" or "property damage", or the offense which caused the "personal and advertising injury", involved the rendering of or the failure to render any professional architectural, engineering or surveying services.



Includes copyrighted material of Insurance Services Office, Inc., with its permission.

**C.** The following is added to Paragraph **2.** Duties In The Event Of Occurrence, Offense, Claim Or Suit of Section **IV – Commercial General Liability Conditions**:

The additional insured must see to it that:

**1.** We are notified as soon as practicable of an "occurrence" or offense that may result in a claim;

**2.** We receive written notice of a claim or "suit" as soon as practicable; and

**3.** A request for defense and indemnity of the claim or "suit" will promptly be brought against any policy issued by another insurer under which the additional insured may be an insured in any capacity. This provision does not apply to insurance on which the additional insured is a Named Insured if the written contract or written agreement requires that this coverage be primary and non-contributory.

**D.** For the purposes of the coverage provided by this endorsement:

**1.** The following is added to the Other Insurance Condition of Section **IV – Commercial General Liability Conditions**:

**Primary and Noncontributory insurance**

This insurance is primary to and will not seek contribution from any other insurance available to an additional insured provided that:

**a.** The additional insured is a Named Insured under such other insurance; and

**b.** You are required by written contract or written agreement that this insurance be primary and not seek contribution from any other insurance available to the additional insured.

**2.** The following paragraph is added to Paragraph **4.b.** of the Other Insurance Condition of Section **IV – Commercial General Liability Conditions**:

This insurance is excess over:

Any of the other insurance, whether primary, excess, contingent or on any other basis, available to an additional insured, in which the additional insured on our policy is also covered as an additional insured on another policy providing coverage for the same "occurrence", offense, claim or "suit". This provision does not apply to any policy in which the additional insured is a Named Insured on such other policy and where our policy is required by a written contract or written agreement to provide coverage to the additional insured on a primary and non-contributory basis.

**E.** This endorsement does not apply to an additional insured which has been added to this policy by an endorsement showing the additional insured in a Schedule of additional insureds, and which endorsement applies specifically to that identified additional insured.

**F.** With respect to the insurance afforded to the additional insureds under this endorsement, the following is added to Section **III – Limits Of Insurance**:

The most we will pay on behalf of the additional insured is the amount of insurance:

**1.** Required by the written contract or written agreement referenced in Paragraph **A.** of this endorsement; or

**2.** Available under the applicable Limits of Insurance shown in the Declarations,

whichever is less.

This endorsement shall not increase the applicable Limits of Insurance shown in the Declarations.

All other terms and conditions of this policy remain unchanged.



Includes copyrighted material of Insurance Services Office, Inc., with its permission.

# Waiver Of Subrogation (Blanket) Endorsement

| Policy No. | Eff. Date of Pol. | Exp. Date of Pol. | Eff. Date of End. | Producer | Add'l Prem. | Return Prem. |
|---|---|---|---|---|---|---|
| GLO 3759709-03 | 01/01/2021 | 01/01/2022 | | 57072000 | $ **INCL** | $ |

**THIS ENDORSEMENT CHANGES THE POLICY. PLEASE READ IT CAREFULLY.**

This endorsement modifies insurance provided under the:

**Commercial General Liability Coverage Part**

The following is added to the **Transfer Of Rights Of Recovery Against Others To Us Condition**:

If you are required by a written contract or agreement, which is executed before a loss, to waive your rights of recovery from others, we agree to waive our rights of recovery. This waiver of rights shall not be construed to be a waiver with respect to any other operations in which the insured has no contractual interest.

**THIS ENDORSEMENT CHANGES THE POLICY. PLEASE READ IT CAREFULLY.**

# DESIGNATED CONSTRUCTION PROJECT(S) GENERAL AGGREGATE LIMIT

This endorsement modifies insurance provided under the following:

COMMERCIAL GENERAL LIABILITY COVERAGE PART

**SCHEDULE**

| **Designated Construction Project(s):** |
|---|
| A GENERAL AGGREGATE LIMIT APPLIES TO EACH CONSTRUCTION PROJECT WHERE THE NAMED INSURED IS PERFORMING OPERATIONS, HOWEVER, A GENERAL AGGREGATE LIMIT DOES NOT APPLY TO ANY CONSTRUCTION PROJECT WHERE THE NAMED INSURED IS PERFORMING OPERATIONS THAT ARE INSURED UNDER A WRAP UP OR ANY OTHER CONSOLIDATED OR SIMILAR INSURANCE PROGRAM. |
| Information required to complete this Schedule, if not shown above, will be shown in the Declarations. |

**A.** For all sums which the insured becomes legally obligated to pay as damages caused by "occurrences" under Section **I** – Coverage **A,** and for all medical expenses caused by accidents under Section **I** – Coverage **C,** which can be attributed only to ongoing operations at a single designated construction project shown in the Schedule above:

1. A separate Designated Construction Project General Aggregate Limit applies to each designated construction project, and that limit is equal to the amount of the General Aggregate Limit shown in the Declarations.
2. The Designated Construction Project General Aggregate Limit is the most we will pay for the sum of all damages under Coverage **A,** except damages because of "bodily injury" or "property damage" included in the "products-completed operations hazard", and for medical expenses under Coverage **C** regardless of the number of:
   - **a.** Insureds;
   - **b.** Claims made or "suits" brought; or
   - **c.** Persons or organizations making claims or bringing "suits".
3. Any payments made under Coverage **A** for damages or under Coverage **C** for medical expenses shall reduce the Designated Construction Project General Aggregate Limit for that designated construction project. Such payments shall not reduce the General Aggregate Limit shown in the Declarations nor shall they reduce any other Designated Construction Project General Aggregate Limit for any other designated construction project shown in the Schedule above.
4. The limits shown in the Declarations for Each Occurrence, Damage To Premises Rented To You and Medical Expense continue to apply. However, instead of being subject to the General Aggregate Limit shown in the Declarations, such limits will be subject to the applicable Designated Construction Project General Aggregate Limit.

 © Insurance Services Office, Inc., 2008  □

**B.** For all sums which the insured becomes legally obligated to pay as damages caused by "occurrences" under Section **I** – Coverage **A,** and for all medical expenses caused by accidents under Section **I** – Coverage **C,** which cannot be attributed only to ongoing operations at a single designated construction project shown in the Schedule above:

1. Any payments made under Coverage **A** for damages or under Coverage **C** for medical expenses shall reduce the amount available under the General Aggregate Limit or the Products-completed Operations Aggregate Limit, whichever is applicable; and
2. Such payments shall not reduce any Designated Construction Project General Aggregate Limit.

**C.** When coverage for liability arising out of the "products-completed operations hazard" is provided, any payments for damages because of "bodily injury" or "property damage" included in the "products-completed operations hazard" will reduce the Products-completed Operations Aggregate Limit, and not reduce the General Aggregate Limit nor the Designated Construction Project General Aggregate Limit.

**D.** If the applicable designated construction project has been abandoned, delayed, or abandoned and then restarted, or if the authorized contracting parties deviate from plans, blueprints, designs, specifications or timetables, the project will still be deemed to be the same construction project.

**E.** The provisions of Section **III** – Limits Of Insurance not otherwise modified by this endorsement shall continue to apply as stipulated.


© Insurance Services Office, Inc., 2008

# Coverage Extension Endorsement – Florida

ZURICH

| THIS ENDORSEMENT CHANGES THE POLICY. PLEASE READ IT CAREFULLY. | |
|---|---|
| Policy No. BAP 3759710-03 | Effective Date: 01/01/2020 |

This endorsement modifies insurance provided under the:

**Business Auto Coverage Form**
**Motor Carrier Coverage Form**

**A. Amended Who Is An Insured**

1. The following is added to the **Who Is An Insured** Provision in **Section II – Covered Autos Liability Coverage**:

   The following are also "insureds":

   **a.** Any "employee" of yours is an "insured" while using a covered "auto" you don't own, hire or borrow for acts performed within the scope of employment by you. Any "employee" of yours is also an "insured" while operating an "auto" hired or rented under a contract or agreement in an "employee's" name, with your permission, while performing duties related to the conduct of your business.

   **b.** Anyone volunteering services to you is an "insured" while using a covered "auto" you don't own, hire or borrow to transport your clients or other persons in activities necessary to your business.

   **c.** Anyone else who furnishes an "auto" referenced in Paragraphs **A.1.a.** and **A.1.b.** in this endorsement.

   **d.** Where and to the extent permitted by law:

   **(1)** Any person(s) or organization(s) where required by written contract or written agreement with you executed prior to any "accident", including

   **(2)** Those person(s) or organization(s) directing your work pursuant to such written contract or written agreement with you,

   provided the "accident" arises out of operations governed by such contract or agreement.

   This applies only up to the limits required in the written contract or written agreement, or the Limits of Insurance shown in the Declarations, whichever is less.

2. The following is added to the **Other Insurance** Condition in the Business Auto Coverage Form and the **Other Insurance – Primary and Excess Insurance Provisions Condition** in the Motor Carrier Coverage Form:

   Coverage for any person(s) or organization(s), where required by written contract or written agreement with you executed prior to any "accident", will apply on a primary and non-contributory basis and any insurance maintained by the additional "insured" will apply on an excess basis. However, in no event will this coverage extend beyond the terms and conditions of the Coverage Form.

**B. Amendment – Supplementary Payments**

Paragraphs **a.(2)** and **a.(4)** of the **Coverage Extensions** Provision in **Section II – Covered Autos Liability Coverage** are replaced by the following:

**(2)** Up to $5,000 for the cost of bail bonds (including bonds for related traffic law violations) required because of an "accident" we cover. We do not have to furnish these bonds.



Includes copyrighted material of Insurance Services Office, Inc., with its permission.

**(4)** All reasonable expenses incurred by the "insured" at our request, including actual loss of earnings up to $500 a day because of time off from work.

**C. Driver Safety Program Liability and Physical Damage Coverage**

**1.** The following is added to the **Racing** Exclusion in **Section II – Covered Autos Liability Coverage**:

This exclusion does not apply to covered "autos" participating in driver safety program events. This includes events such as, but not limited to, auto or truck rodeos and other auto or truck agility demonstrations.

**2.** The following is added to Paragraph **2.** in the **Exclusions** of **Section III – Physical Damage Coverage** of the Business Auto Coverage Form and Paragraph **2.b.** in the **Exclusions** of **Section IV – Physical Damage Coverage** of the Motor Carrier Coverage Form:

This exclusion does not apply to covered "autos" participating in driver safety program events. This includes events such as, but not limited to, auto or truck rodeos and other auto or truck agility demonstrations.

**D. Lease or Loan Gap Coverage**

The following is added to the **Coverage** Provision of the **Physical Damage Coverage** Section:

**Lease Or Loan Gap Coverage**

In the event of a total "loss" to a covered "auto", we will pay any unpaid amount due on the lease or loan for a covered "auto", less:

**a.** Any amount paid under the **Physical Damage Coverage** Section of the Coverage Form; and

**b.** Any:

**(1)** Overdue lease or loan payments at the time of the "loss";

**(2)** Financial penalties imposed under a lease for excessive use, abnormal wear and tear or high mileage;

**(3)** Security deposits not returned by the lessor;

**(4)** Costs for extended warranties, credit life insurance, health, accident or disability insurance purchased with the loan or lease; and

**(5)** Carry-over balances from previous leases or loans.

**E. Towing and Labor**

Paragraph **A.2.** of the **Physical Damage Coverage** Section is replaced by the following:

We will pay up to $75 for towing and labor costs incurred each time a covered "auto" of the private passenger type is disabled. However, the labor must be performed at the place of disablement.

**F. Extended Glass Coverage**

The following is added to Paragraph **A.3.a.** of the **Physical Damage Coverage** Section:

If glass must be replaced, the deductible shown in the Declarations will apply. However, if glass can be repaired and is actually repaired rather than replaced, the deductible will be waived. You have the option of having the glass repaired rather than replaced.

**G. Hired Auto Physical Damage – Increased Loss of Use Expenses**

The **Coverage Extension** for **Loss Of Use Expenses** in the **Physical Damage Coverage** Section is replaced by the following:

**Loss Of Use Expenses**

For Hired Auto Physical Damage, we will pay expenses for which an "insured" becomes legally responsible to pay for loss of use of a vehicle rented or hired without a driver under a written rental contract or written rental agreement. We will pay for loss of use expenses if caused by:

**(1)** Other than collision only if the Declarations indicate that Comprehensive Coverage is provided for any covered "auto";



Includes copyrighted material of Insurance Services Office, Inc., with its permission.

**(2)** Specified Causes Of Loss only if the Declarations indicate that Specified Causes Of Loss Coverage is provided for any covered "auto"; or

**(3)** Collision only if the Declarations indicate that Collision Coverage is provided for any covered "auto".

However, the most we will pay for any expenses for loss of use is $100 per day, to a maximum of $3000.

**H. Personal Effects Coverage**

The following is added to the **Coverage** Provision of the **Physical Damage Coverage** Section:

**Personal Effects Coverage**

**a.** We will pay up to $750 for "loss" to personal effects which are:

**(1)** Personal property owned by an "insured"; and

**(2)** In or on a covered "auto".

**b.** Subject to Paragraph **a.** above, the amount to be paid for "loss" to personal effects will be based on the lesser of:

**(1)** The reasonable cost to replace; or

**(2)** The actual cash value.

**c.** The coverage provided in Paragraphs **a.** and **b.** above, only applies in the event of a total theft of a covered "auto". No deductible applies to this coverage. However, we will not pay for "loss" to personal effects of any of the following:

**(1)** Accounts, bills, currency, deeds, evidence of debt, money, notes, securities, or commercial paper or other documents of value.

**(2)** Bullion, gold, silver, platinum, or other precious alloys or metals; furs or fur garments; jewelry, watches, precious or semi-precious stones.

**(3)** Paintings, statuary and other works of art.

**(4)** Contraband or property in the course of illegal transportation or trade.

**(5)** Tapes, records, discs or other similar devices used with audio, visual or data electronic equipment.

Any coverage provided by this Provision is excess over any other insurance coverage available for the same "loss".

**I. Tapes, Records and Discs Coverage**

**1.** The Exclusion in Paragraph **B.4.a.** of **Section III – Physical Damage Coverage** in the Business Auto Coverage Form and the Exclusion in Paragraph **B.2.c.** of **Section IV – Physical Damage Coverage** in the Motor Carrier Coverage Form does not apply.

**2.** The following is added to Paragraph **1.a. Comprehensive Coverage** under the **Coverage** Provision of the **Physical Damage Coverage** Section:

We will pay for "loss" to tapes, records, discs or other similar devices used with audio, visual or data electronic equipment. We will pay only if the tapes, records, discs or other similar audio, visual or data electronic devices:

**(a)** Are the property of an "insured"; and

**(b)** Are in a covered "auto" at the time of "loss".

The most we will pay for such "loss" to tapes, records, discs or other similar devices is $500. The **Physical Damage Coverage Deductible** Provision does not apply to such "loss".

**J. Airbag Coverage**

The Exclusion in Paragraph **B.3.a.** of **Section III – Physical Damage Coverage** in the Business Auto Coverage Form and the Exclusion in Paragraph **B.4.a.** of **Section IV – Physical Damage Coverage** in the Motor Carrier Coverage Form does not apply to the accidental discharge of an airbag.



Includes copyrighted material of Insurance Services Office, Inc., with its permission.

**K. Two or More Deductibles**

The following is added to the **Deductible** Provision of the **Physical Damage Coverage** Section:

If an accident is covered both by this policy or Coverage Form and by another policy or Coverage Form issued to you by us, the following applies for each covered "auto" on a per vehicle basis:

1. If the deductible on this policy or Coverage Form is the smaller (or smallest) deductible, it will be waived; or
2. If the deductible on this policy or Coverage Form is not the smaller (or smallest) deductible, it will be reduced by the amount of the smaller (or smallest) deductible.

**L. Physical Damage – Comprehensive Coverage – Deductible**

The following is added to the **Deductible** Provision of the **Physical Damage Coverage** Section:

Regardless of the number of covered "autos" damaged or stolen, the maximum deductible that will be applied to Comprehensive Coverage for all "loss" from any one cause is $5,000 or the deductible shown in the Declarations, whichever is greater.

**M. Temporary Substitute Autos – Physical Damage**

1. The following is added to **Section I – Covered Autos**:

   **Temporary Substitute Autos – Physical Damage**

   If Physical Damage Coverage is provided by this Coverage Form on your owned covered "autos", the following types of vehicles are also covered "autos" for Physical Damage Coverage:

   Any "auto" you do not own when used with the permission of its owner as a temporary substitute for a covered "auto" you do own but is out of service because of its:

   1. Breakdown;
   2. Repair;
   3. Servicing;
   4. "Loss"; or
   5. Destruction.

2. The following is added to the Paragraph **A. Coverage** Provision of the **Physical Damage Coverage** Section:

   **Temporary Substitute Autos – Physical Damage**

   We will pay the owner for "loss" to the temporary substitute "auto" unless the "loss" results from fraudulent acts or omissions on your part. If we make any payment to the owner, we will obtain the owner's rights against any other party.

   The deductible for the temporary substitute "auto" will be the same as the deductible for the covered "auto" it replaces.

**N. Amended Duties In The Event Of Accident, Claim, Suit Or Loss**

Paragraph **a.** of the **Duties In The Event Of Accident, Claim, Suit Or Loss** Condition is replaced by the following:

**a.** **(1)** In the event of "accident", claim, "suit" or "loss", you must give us or our authorized representative prompt notice of the "accident", claim, "suit" or "loss". However, these duties only apply when the "accident", claim, "suit" or "loss" is known to:

**(a)** You (if you are an individual);

**(b)** A partner (if you are a partnership);

**(c)** A member (if you are a limited liability company); or

**(d)** An executive officer or insurance manager (if you are a corporation).

The failure of any agent, servant or employee of the "insured" to notify us of any "accident", claim, "suit" or "loss" shall not invalidate the insurance afforded by this policy.



Includes copyrighted material of Insurance Services Office, Inc., with its permission.

**(2)** Include, as soon as practicable:

**(a)** How, when and where the "accident" or "loss" occurred and if a claim is made or "suit" is brought, written notice of the claim or "suit" including, but not limited to, the date and details of such claim or "suit";

**(b)** The "insured's" name and address; and

**(c)** To the extent possible, the names and addresses of any injured persons and witnesses.

**(3)** If you report an "accident", claim, "suit" or "loss" to another insurer when you should have reported to us, your failure to report to us will not be seen as a violation of these amended duties provided you give us notice as soon as practicable after the fact of the delay becomes known to you.

**O. Waiver of Transfer Of Rights Of Recovery Against Others To Us**

The following is added to the **Transfer Of Rights Of Recovery Against Others To Us** Condition:

This Condition does not apply to the extent required of you by a written contract, executed prior to any "accident" or "loss", provided that the "accident" or "loss" arises out of operations contemplated by such contract. This waiver only applies to the person or organization designated in the contract.

**P. Employee Hired Autos – Physical Damage**

Paragraph **b.** of the **Other Insurance** Condition in the Business Auto Coverage Form and Paragraph **f.** of the **Other Insurance – Primary and Excess Insurance Provisions** Condition in the Motor Carrier Coverage Form are replaced by the following:

For Hired Auto Physical Damage Coverage, the following are deemed to be covered "autos" you own:

**(1)** Any covered "auto" you lease, hire, rent or borrow; and

**(2)** Any covered "auto" hired or rented under a written contract or written agreement entered into by an "employee" or elected or appointed official with your permission while being operated within the course and scope of that "employee's" employment by you or that elected or appointed official's duties as respect their obligations to you.

However, any "auto" that is leased, hired, rented or borrowed with a driver is not a covered "auto".

**Q. Unintentional Failure to Disclose Hazards**

The following is added to the **Concealment, Misrepresentation Or Fraud** Condition:

However, we will not deny coverage under this Coverage Form if you unintentionally:

**(1)** Fail to disclose any hazards existing at the inception date of this Coverage Form; or

**(2)** Make an error, omission, improper description of "autos" or other misstatement of information.

You must notify us as soon as possible after the discovery of any hazards or any other information that was not provided to us prior to the acceptance of this policy.

**R. Hired Auto – World Wide Coverage**

Paragraph **7.a.(5)** of the **Policy Period, Coverage Territory** Condition is replaced by the following:

**(5)** Anywhere in the world if a covered "auto" is leased, hired, rented or borrowed for a period of 60 days or less,

**S. Bodily Injury Redefined**

The definition of "bodily injury" in the **Definitions** Section is replaced by the following:

"Bodily injury" means bodily injury, sickness or disease, sustained by a person including death or mental anguish, resulting from any of these at any time. Mental anguish means any type of mental or emotional illness or disease.

**T. Expected Or Intended Injury**

The **Expected Or Intended Injury** Exclusion in Paragraph **B. Exclusions** under **Section II – Covered Autos Liability Coverage** is replaced by the following:



Includes copyrighted material of Insurance Services Office, Inc., with its permission.

**Expected Or Intended Injury**

"Bodily injury" or "property damage" expected or intended from the standpoint of the "insured". This exclusion does not apply to "bodily injury" or "property damage" resulting from the use of reasonable force to protect persons or property.

**U. Physical Damage – Additional Temporary Transportation Expense Coverage**

Paragraph **A.4.a.** of **Section III – Physical Damage Coverage** is replaced by the following:

**4. Coverage Extensions**

**a. Transportation Expenses**

We will pay up to $50 per day to a maximum of $1,000 for temporary transportation expense incurred by you because of the total theft of a covered "auto" of the private passenger type. We will pay only for those covered "autos" for which you carry either Comprehensive or Specified Causes of Loss Coverage. We will pay for temporary transportation expenses incurred during the period beginning 48 hours after the theft and ending, regardless of the policy's expiration, when the covered "auto" is returned to use or we pay for its "loss".

**V. Replacement of a Private Passenger Auto with a Hybrid or Alternative Fuel Source Auto**

The following is added to Paragraph **A. Coverage** of the **Physical Damage Coverage** Section:

In the event of a total "loss" to a covered "auto" of the private passenger type that is replaced with a hybrid "auto" or "auto" powered by an alternative fuel source of the private passenger type, we will pay an additional 10% of the cost of the replacement "auto", excluding tax, title, license, other fees and any aftermarket vehicle upgrades, up to a maximum of $2500. The covered "auto" must be replaced by a hybrid "auto" or an "auto" powered by an alternative fuel source within 60 calendar days of the payment of the "loss" and evidenced by a bill of sale or new vehicle lease agreement.

To qualify as a hybrid "auto", the "auto" must be powered by a conventional gasoline engine and another source of propulsion power. The other source of propulsion power must be electric, hydrogen, propane, solar or natural gas, either compressed or liquefied. To qualify as an "auto" powered by an alternative fuel source, the "auto" must be powered by a source of propulsion power other than a conventional gasoline engine. An "auto" solely propelled by biofuel, gasoline or diesel fuel or any blend thereof is not an "auto" powered by an alternative fuel source.

**W. Return of Stolen Automobile**

The following is added to the **Coverage Extension** Provision of the **Physical Damage Coverage** Section:

If a covered "auto" is stolen and recovered, we will pay the cost of transport to return the "auto" to you. We will pay only for those covered "autos" for which you carry either Comprehensive or Specified Causes of Loss Coverage.

All other terms, conditions, provisions and exclusions of this policy remain the same.



Includes copyrighted material of Insurance Services Office, Inc., with its permission.

## WAIVER OF OUR RIGHT TO RECOVER FROM OTHERS ENDORSEMENT

We have the right to recover our payments from anyone liable for an injury covered by this policy. We will not enforce our right against the person or organization named in the Schedule. (This agreement applies only to the extent that you perform work under a written contract that requires you to obtain this agreement from us.)

This agreement shall not operate directly or indirectly to benefit anyone not named in the Schedule.

Schedule

ALL PERSONS AND/OR ORGANIZATIONS THAT ARE REQUIRED BY WRITTEN CONTRACT OR AGREEMENT WITH THE INSURED, EXECUTED PRIOR TO THE ACCIDENT OR LOSS, THAT WAIVER OF SUBROGATION BE PROVIDED UNDER THIS POLICY FOR WORK PERFORMED BY YOU FOR THAT PERSON AND/OR ORGANIZATION


© 1983 National Council on Compensation Insurance.

**EXHIBIT "I"**
WARRANTY FORMS

CONTRACTOR WARRANTY FORM

PROJECT: **Wellfield Rehabilitation, Maintenance and New Construction**.

OWNER: VILLAGE OF WELLINGTON

CONTRACTOR:

Contractors does hereby warrant to the Owner, that all labor and materials furnished, and Work performed in conjunction with the above-referenced project are in accordance with the Contract Documents and authorized modifications thereto, and will be free from defects due to defective labor, materials or workmanship. This warranty commences on the date of Substantial Completion of the entire Project (as defined in the Contract Documents), and expires after the later of one year from the date of Substantial Completion of the entire Project, or such longer time periods for particular items according to the specifications listed in the Contract Documents. The consideration for this warranty is the amount of the Contract to Contractor for the performance of Work.

Should any defect or deficiency develop during the warranty period due to improper labor, materials, workmanship or otherwise, the same, including adjacent Work displaced, shall be made good by the undersigned at no expense to the Owner.

The Owner will give the Contractor written notice of defective Work. Should Contractor fail to correct defective Work within three (3) calendar days after receiving written notice, the Owner may, at its option, correct defects and charge the Contractor with the costs for such correction. Contractor agrees to pay such charges upon demand.

Nothing in the above shall be deemed to apply to Work which has been abused or neglected by the Owner.

By:_____
Name and Title:
Date:_____

STATE OF FLORIDA )
SS:
COUNTY OF PALM BEACH )

The foregoing instrument was acknowledged before me by means of ☐ physical presence or ☐ online notarization, this ___ day of _____, 20____ by _____ as _____(INSERT TITLE), of _____ [INSERT NAME OF ENTITY – ie: corporation, limited liability company, etc.), (insert status ie: a corporation existing under the laws of the State of _____), ☐ who is personally known to me or ☐ who has produced as identification Driver's License # _____ or (other identification) (describe) _____.

My Commission Expires: _____
Notary Public State of Florida at large

SUBCONTRACTOR'S MATERIAL AND WORKMANSHIP WARRANTY FORM

PROJECT: **Wellfield Rehabilitation, Maintenance and New Construction**.

OWNER: VILLAGE OF WELLINGTON

CONTRACTOR:

SUBCONTRACTOR:

Subcontractor does hereby warrant to the Owner, that all labor and materials furnished, and Work performed in conjunction with the above-referenced project are in accordance with the Contract Documents and authorized modifications thereto, and will be free from defects due to defective labor, materials or workmanship. This warranty commences on the date of Substantial Completion of the entire Project (as defined in the Contract Documents), and expires in accordance with the longer of one year from the date of Substantial Completion or the durations listed in the specifications in the Contract Documents for the Subcontractor's Work. The consideration for this warranty is the amount of the Contract to Subcontractor for the performance of Work.

Should any defect or deficiency develop during the warranty period due to improper labor, materials, workmanship or otherwise, the same, including adjacent Work displaced, shall be made good by the undersigned at no expense to the Owner.

The Owner will give the Contractor and/or Subcontractor written notice of defective Work. Should Subcontractor fail to correct defective Work within three (3) days after receiving written notice, the Owner may, at its option, correct defects and charge the Subcontractor with the costs for such correction. Subcontractor agrees to pay such charges upon demand.

Nothing in the above shall be deemed to apply to Work which has been abused or neglected by the Owner.

SUBCONTRACTOR

By:_____
Title:_____
Date:_____

STATE OF FLORIDA )
SS:
COUNTY OF PALM BEACH )

The foregoing instrument was acknowledged before me by means of ☐ physical presence or ☐ online notarization, this ___ day of _____, 20____ by _____ as _____(INSERT TITLE), of _____ [INSERT NAME OF ENTITY – ie: corporation, limited liability company, etc.), (insert status ie: a corporation existing under the laws of the State of _____), ☐ who is personally known to me or ☐ who has produced as identification Driver's License # _____ or (other identification) (describe) _____.

My Commission Expires: _____
Notary Public State of Florida at large

**EXHIBIT "J"**
FORM OF CERTIFICATE OF SUBSTANTIAL COMPLETION

CERTIFICATE OF SUBSTANTIAL COMPLETION

PROJECT: **Wellfield Rehabilitation, Maintenance and New Construction**.

CONTRACTOR: _____

DATE OF ISSUANCE: _____ NOTICE TO PROCEED DATE: _____

PROJECT OR DESIGNATED PORTION SHALL INCLUDE:

The work performed under this Contract has been reviewed and found to be substantially complete and all documents required to be submitted by CONTRACTOR under the Contract Documents have been received and accepted. The Date of Substantial Completion of the Project or portion thereof designated above is hereby established as _____ which is also the date of commencement of applicable warranties required by the Contract Documents, except as stated below.

Definition of Date of Substantial Completion
The Date of Substantial Completion of the work or portion thereof designated by VILLAGE is the date certified by VILLAGE when all conditions and requirements of permits and regulatory agencies have been satisfied and the Work is sufficiently complete in accordance with the Contract Documents including, but not limited to Article 38, so the Project is available for beneficial occupancy by VILLAGE. A Certificate of Occupancy must be issued for Substantial Completion to be achieved; however, the issuance of a Certificate of Occupancy or the date thereof are not to be determinative of the achievement or date of Substantial Completion.

A list of items to be completed or corrected, prepared by VILLAGE, is attached hereto. The failure to include any items on such list does not alter the responsibility of CONTRACTOR to complete all work in accordance with the Contract Documents. The date of commencement of warranties for items on the attached list will be the date of final payment unless otherwise agreed in writing.

CONTRACTOR
By:_____ DATE:_____
Print Name:_____

In accordance with the Agreement, CONTRACTOR will complete or correct the work on the list of items attached hereto within 15 days from Substantial Completion.

CONTRACTOR
By:_____ DATE:_____
Print Name:_____

VILLAGE accepts the Work or portion thereof designated by VILLAGE as substantially complete and will assume full possession thereof at _____ (time) on _____ (date).

VILLAGE OF WELLINGTON
By:_____ DATE: _____

_____
Title

The responsibilities of VILLAGE and CONTRACTOR for security, maintenance, heat, utilities, damage to the Work and insurance shall be as follows:

**EXHIBIT "K"**
FORM OF APPLICATION FOR PAYMENT

# APPLICATION FOR PAYMENT NO. _____

Project: **Wellfield Rehabilitation, Maintenance and New Construction**
Contractor: **Florida Design Drilling Corporation**
Start Date:_____ Completion Date: _____

Application is made for payment, as hereinafter shown, in connection with this Contract:

| | |
|---|---|
| Total Work to Date – see attached schedule | $_____ |
| Total Material Suitably Stored – see attached schedule | $_____ |
| Gross Amount Due | $_____ |
| Less _____% Retainage | $_____ |
| Amount Due to Date | $_____ |
| Less Previous Applications | $_____ |
| **Amount Due This Application** | $_____ |

Contractor's Certification:

The undersigned Contractor certifies that :

(1) all previous progress payments received from Owner on account of Work done under the Agreement referred to above have been applied to discharge in full all obligations of Contractor incurred in connection with Work covered by prior Applications for Payment numbered 1 through _____, inclusive; and

(2) title to all materials and equipment incorporated in said Work or otherwise listed in or covered by this Application for Payment will pass to Owner at time of payment free and clear of all liens, claims, security interests and encumbrances (except such as covered by Bond acceptable to Owner).

Dated:_____ By _____
(Name) (Title)

State of )
County of )ss _____
(Printed Name and Title)

The foregoing instrument was acknowledged before me by means of ☐ physical presence or ☐ online notarization, this ___ day of _____, 20____ by _____ as _____(INSERT TITLE), of _____ [INSERT NAME OF ENTITY – ie: corporation, limited liability company, etc.), (insert status ie: a corporation existing under the laws of the State of _____), ☐ who is personally known to me or ☐ who has produced as identification Driver's License # _____ or (other identification) (describe) _____.

_____ _____
Notary Public Signature and Seal Print Notary Name and Commission No.

---

Payment of the above AMOUNT DUE THIS APPLICATION is recommended.
WELLINGTON DESIGNEE
Date:_____ By: _____
(Name) (Title)

Engineer's Certification (if applicable)
In accordance with the contract documents, based on on-site observations and the data comprising the application, the Engineer certifies to the Owner that to the best of the Engineer's knowledge, information and belief the Work has progressed as indicated, the quality of the Work is in accordance with the Contract Documents, and the Contractor is entitled to payment of the amount above.

Date:_____ By: _____
(Name) (Title)

**EXHIBIT "L"**
BILL OF SALE, ABSOLUTE

KNOWN ALL MEN BY THESE PRESENTS, that _____, a corporation of _____ County, Florida, party of the first part, for an in consideration of the sum of Ten and No/100 ($10.00) lawful money of the United States, to it paid by WELLINGTON, a municipal corporation of the State of Florida, 12300 Forest Hill Boulevard, Wellington, Palm Beach County, Florida 33414, party of the second part, the receipt whereof is hereby acknowledged has granted, bargained, sold, transferred and delivered, and by these presents does grant, bargain, sell, transfer and deliver unto the said party of the second party, its executors, administrators and assigns, the following goods and chattels:

Project Name: **Wellfield Rehabilitation, Maintenance and New Construction**. consisting of the components set forth in the final schedule of values as described in Exhibit "A", attached hereto and made a part hereof.

TO HAVE AND TO HOLD the same unto the said party of the second part, its executors, administrators and assigns forever.

AND, it does, for itself and its successors and assigns covenant to and with the said party of the second part, its successors and assigns, that it is the lawful owner of the said goods and chattels; that they are free from all encumbrances; that it has good right to sell the same aforesaid, and that it will warrant and defend the sale of the said property, goods and chattels hereby made, unto the said party of the second part its successors and assigns against the lawful claims and demands of all persons whomsoever.

IN WITNESS WHEREOF, it has hereunto set its hand and seal this _____ day of _____, 20_____.

Signed, sealed and delivered
in the presence of:

_____

WITNESSES:

_____ _____
Signature Name: _____
Title: _____

_____
Print Name

_____ [Corporate Seal]
Signature

_____
Print Name

The foregoing instrument was acknowledged before me by means of ☐ physical presence or ☐ online notarization, this ___ day of _____, 20____ by _____ as _____(INSERT TITLE), of _____ [INSERT NAME OF ENTITY – ie: corporation, limited liability company, etc.), (insert status ie: a corporation existing under the laws of the State of _____), ☐ who is personally known to me or ☐ who has produced as identification Driver's License # _____ or (other identification) (describe) _____.

_____

(stamp) Print Notary Name:_____

**EXHIBIT "M"**
CONTRACTOR'S AFFIDAVIT TO OWNER
AND FINAL RELEASE OF LIENS

STATE OF FLORIDA
COUNTY OF _____

Before me, the undersigned authority, authorized to administer oaths and take acknowledgements, personally appeared _____, who, being by me first duly sworn, on oath depose(s) and say(s):

(1) He/she is/they are a (Corporation, Partnership, or Individual) of _____ (State), doing business as _____, hereinafter called "Contractor".

(2) Contractor heretofore entered into a Contract with Wellington, hereinafter called "Owner" to do Work (furnish material, labor and services) for **Wellfield Rehabilitation, Maintenance and New Construction.**, located at Palm Beach County, Florida.

(3) Contractor has fully completed construction in accordance with the terms of the Contract, and all lienors have been paid in full, except:

| NAME OF LIENOR | AMOUNT DUE AND UNPAID |
|---|---|
| _____ | _____ |
| _____ | _____ |

(4) All Workmen's Compensation claims have been settled and no liability claims are pending, in connection with, arising out of or resulting from the Contractor.

(5) Receipt by the Contractor of the final payment, under the aforementioned Contract, shall constitute a full release and discharge by the Contractor to the Owner of any and all claims of the Contractor against the Owner, arising out of, connected with, or resulting from performance of the obligations of the Contractor pursuant to the Contract Documents.

(6) The term "lienor" as used in this affidavit means any person having a lien or a prospective lien, under the Mechanics Lien Law of Florida, on the land and property of the Owner referred to in paragraph (2) of this affidavit. Further, Contractor represents, warrants and covenants that all subcontractors, materialmen and suppliers have been paid in full. The contractor further provides under penalty of perjury that there are no claims of lien on the project.

(7) This affidavit is given pursuant to the provisions of Florida Statutes Section 713.06 or Section 255.05, whichever is applicable.

Signed and sealed in the presence of:

_____ _____(Entity)

_____ By:_____ (Seal)

The foregoing instrument was acknowledged before me by means of ☐ physical presence or ☐ online notarization, this ___ day of _____, 20____ by _____ as _____(INSERT TITLE), of _____ [INSERT NAME OF ENTITY – ie: corporation, limited liability company, etc.), (insert status ie: a corporation existing under the laws of the State of _____), ☐ who is personally known to me or ☐ who has produced as identification Driver's License # _____ or (other identification) (describe) _____.

_____ _____
Notary Public Signature and Seal Print Notary Name and Commission No.

**EXHIBIT "N1"**
**CONFLICT OF INTEREST STATEMENT**

# CONFLICT OF INTEREST STATEMENT

This Proposal/Agreement (whichever is applicable) is subject to the conflict of interest provisions of the policies and Code of Ordinances of WELLINGTON, the Palm Beach County Code of Ethics, and the Florida Statutes. During the term of this Agreement and any renewals or extensions thereof, the VENDOR shall disclose to WELLINGTON any possible conflicts of interests. The VENDOR's duty to disclose is of a continuing nature and any conflict of interest shall be immediately brought to the attention of WELLINGTON. The terms below shall be defined in accordance with the policies and Code of Ordinances of WELLINGTON, the Palm Beach County Code of Ethics, and Ch. 112, Part III, Florida Statutes.

**CHECK ALL THAT APPLY.**

## NO CONFLICT:

[X] To the best of our knowledge, the undersigned business has no potential conflict of interest for this Agreement due to any other clients, contracts, or property interests.

[X] To the best of our knowledge, the undersigned business has no employment or other contractual relationship with any WELLINGTON employee, elected official or appointed official.

[X] To the best of our knowledge, the undersigned business has no officer, director, partner or proprietor that is a WELLINGTON purchasing agent, other employee, elected official or appointed official. The term "purchasing agent", "elected official" or "appointed official", as used in this paragraph, shall include the respective individual's spouse or child, as defined in Ch. 112, Part III, Florida Statutes.

[X] To the best of our knowledge, no WELLINGTON employee, elected official or appointed official has a material or ownership interest (5% ownership) in our business. The term "employee", "elected official" and "appointed official", as used in this paragraph, shall include such respective individual's relatives and household members as described and defined in the Palm Beach County Code of Ethics.

[X] To the best of our knowledge, the undersigned business has no current clients that are presently subject to the jurisdiction of WELLINGTON's Planning, Zoning and Building Department.

---

## POTENTIAL CONFLICT:

[ ] **The undersigned business, by attachment to this form, submits information which may be a potential conflict of interest due to any of the above listed reasons or otherwise.**

THE UNDERSIGNED UNDERSTANDS AND AGREES THAT THE FAILURE TO CHECK THE APPROPRIATE BLOCKS ABOVE OR TO ATTACH THE DOCUMENTATION OF ANY POSSIBLE CONFLICTS OF INTEREST MAY RESULT IN DISQUALIFICATION OF YOUR BID/PROPOSAL OR IN THE IMMEDIATE CANCELLATION OF YOUR AGREEMENT, WHICHEVER IS APPLICABLE.

Florida Design Drilling Corporation
COMPANY NAME

AUTHORIZED SIGNATURE

Michael Black
NAME (PRINT OR TYPE)

Senior Vice President
TITLE

# NON-COLLUSION AFFIDAVIT

State of Florida

County of Palm Beach

Being duly sworn deposes and says:

That he/she is an officer of the parties making the forgoing bid submittal, that the bid is made without prior understanding, agreement, or connection with any individual, firm, partnership, corporation or other entity submitting a bid for the same materials, services, supplies or equipment, either directly or indirectly, and is in all respects fair and without collusion or fraud. No premiums, rebates, or gratuities are permitted with, prior to, or after any delivery of material or provision of services. Any violation of this provision may result in disqualification, contract cancellation, return of materials or discontinuation of services, and the possible removal of Bidder from the vendor Bid lists.

Florida Design Drilling Corporation
Name of Bidder

Michael Black
Print name of designated signatory

Signature

Senior Vice President
Title

The foregoing instrument was acknowledged before me by means of ☑ physical presence or ☐ online notarization, this 22nd day of September, 2020 by Michael Black as Senior Vice President (INSERT TITLE), of Florida Design Drilling Corporation [INSERT NAME OF ENTITY – ie: corporation, limited liability company, etc.), (insert status ie: a corporation existing under the laws of the State of Florida), ☑ who is personally known to me or ☐ who has produced as identification Driver's License # _____ or (other identification) (describe) _____.

Signature

Notary Public in and for the State of Florida

(Affix Seal Here)

SHARON LAWRENCE MCGEE
Notary Public - State of Florida
Commission # GG 129764
My Comm. Expires Jul 31, 2021
Bonded through National Notary Assn.

(Name Printed)

Residing at _____

My commission expires _____

**EXHIBIT "N3"**
**CERTIFICATION PURSUANT TO FLORIDA STATUTE 287.135 AND 215.4725**

# CERTIFICATION PURSUANT TO FLORIDA STATUTE § 215.4725

I, Michael Black (Print Name), on behalf of Florida Design Drilling Corporation (Company Name), certifies that Florida Design Drilling Corporation (Company Name) does not:

1. Participate in a boycott of Israel; and
2. Is not on the Scrutinized Companies that Boycott Israel list; and
3. Is not on the Scrutinized Companies with Activities in Sudan List; and
4. Is not on the Scrutinized Companies with Activities in the Iran Petroleum Energy Sector List; and
5. Has not engaged in business operations in Cuba or Syria.

Signature

Senior Vice President
Title

9/22/2020
Date

EXHIBIT "O"
SALES TAX EXEMPTION CERTIFICATE OF ENTITLEMENT

# CERTIFICATE OF ENTITLEMENT – SAMPLE

I, the undersigned authorized representative of_____ (hereinafter "Governmental Entity"), Florida Consumer's Certificate of Exemption Number , certify that the tangible personal property purchased on or after _____ (date) will be incorporated into or become a part of a public facility as part of a public works contract pursuant to contract # _____ with _____ (Name of Contractor) for the building of _____.

I certify that the purchase of the materials contained in the attached Purchase Order meets the following exemption requirements contained in Section 212.08(6), F.S., and Rule 12A-1.094, F.A.C.:

You must initial each of the following requirements.

____ 1. The attached Purchase Order is issued directly to the vendor supplying the materials the contractor will use in the identified public works.

____ 2. The vendor's invoice is issued directly to Governmental Entity.

____ 3. Payment of the vendor's invoice is made directly by Governmental Entity to the vendor from public funds.

____ 4. Governmental Entity will take title to the tangible personal property from the vendor at the time of purchase or delivery by the vendor.

____ 5. Governmental Entity assumes the risk of damage or loss at the time of purchase.

I understand that if the tangible personal property identified in the attached Purchase Order does not qualify for the exemption provided in Section 212.08(6), F.S., and Rule 12A-1.094, F.A.C., Governmental Entity will be subject to the tax, interest, and penalties due on the materials purchased. If the Department of Revenue determines that the materials purchased tax-exempt by issuing this Certificate do not qualify for the exemption, Governmental Entity will be liable for any tax, penalty, and interest determined to be due.

I understand that if I fraudulently issue this certificate to evade the payment of sales tax I will be liable for payment of the sales tax plus a penalty of 200% of the tax and may be subject to conviction of a third degree felony.

Under the penalties of perjury, I declare that I have read the foregoing Certificate of Entitlement and the facts stated in it are true.

Signature of Authorized Representative Title

Purchaser's Name (Print or Type) Date

Federal Employer Identification:

Telephone Number:

You must attach the Purchase Order and the Florida Consumer's Certificate of Exemption issued to Governmental Entity.

Do not send to the Department of Revenue. This Certificate of Entitlement must be retained in the vendor's and the contractor's books and records.

(d)(c) If the contractor does not have a Certificate of Entitlement, sales to the contractor are subject to tax, unless the contractor can demonstrate to the satisfaction of the Executive Director or designee that such sales are, in substance, tax-exempt direct sales to a governmental entity.

(e) The governmental entity may not transfer liability for such tax, penalty, and interest to another party by contract or agreement.

(f) In the case of contracts with any agency or branch of the United States government in which the federal governmental agency or branch is not required to produce a Certificate of Entitlement, the purchase must comply with the five criteria provided in paragraph

(4)(b), for the purchase of supplies and materials to be exempt from sales and use tax. If the criteria in paragraph (4)(b) are not met, the contractor is the ultimate consumer of such supplies or materials and is liable for sales or use tax on such purchases and manufacturing costs.

(5) Contractors, including subcontractors, that manufacture or fabricate their own materials for incorporation into public works cannot be included in a governmental entity's direct purchase program and may not accept a Certificate of Entitlement. The contractor and subcontractors, not the governmental entity, are deemed to be the ultimate consumers of the articles of tangible personal property they manufacture or fabricate to perform their contracts and are liable for tax in the manner provided in subsection (10) of Rule 12A-1.051, F.A.C.

(6) through (8) No change.

Rulemaking Authority 212.08(6), 212.17(6), 212.18(2), 212.183, 213.06(1) FS. Law Implemented 212.02(4), (14), (15), (16), (19), (20), (21), 212.06(1), (2), (14), 212.07(1), 212.08(6), (7)(bbb), 212.085, 212.18(2), 212.183 FS., s. 8, Ch. 2010-138, L.O.F. History–New 6-3-80, Amended 11-15-82, Formerly 12A-1.94, Amended 1-2-89, 8-10-92, 6-28-04, .

# TOWN OF JUPITER UTILITIES
# BID TABULATION

**CALL TO ORDER:** Brittany George

**OPENING DATE AND TIME:** January 13, 2021 at 2:00 pm

**BID TITLE:** Construction of Surficial Aquifer Well 12A and Surficial Wellfield Rehabilitation Program (W2111)

**LOCATION:** Town Council Chambers

**BID #:** ITB-W2111-0-2020/rw

**IN ATTENDANCE:** Brittany George and Laura Cahill
**Representative for each Bidder**

| BIDDER: | TOTAL BASE BID: | TOTAL ADDITIVE ALTERNATE BID: | BID BOND: |
|---|---|---|---|
| Centerline Drilling, Inc. | $459,349 | $231,750 | Yes |
| All Webb's Enterprises, Inc. | $567,900 | $252,200 | Yes |
| Florida Design Drilling Corporation | $585,285 | $252,750 | Yes |
| | | | |
| | | | |
| | | | |
| | | | |

**APPARENT LOW BIDDER:** Centerline Drilling, Inc.

**BID CLOSING TIME:** 2:05 pm

# CONSTRUCTION OF SURFICIAL AQUIFER WELL 12A AND SURFICIAL WELLFIELD REHABILITATION PROGRAM (W2111)

## Bid Documents

**DECEMBER 2020**

| | |
|---|---|
| TODD R. WODRASKA | MAYOR |
| ILAN KAUFFER | VICE-MAYOR |
| RON DELANEY | COUNCILOR |
| JIM KURETSKI | COUNCILOR |
| CAMERON MAY | COUNCILOR |
| MATT BENOIT | TOWN MANAGER |
| DAVID L. BROWN | DIRECTOR OF UTILITIES |

## TABLE OF CONTENTS


Technical Specifications Table of Contents ..... 3

Invitation to Bid ..... 5

Instructions to Bidders ..... 7

Bid Proposal ..... 21

- Bid Schedule of Values ..... 2
- List of Subcontractors/Suppliers ..... 8
- Qualification Requirements ..... 9
- Contractor Safety Qualifications/Requirements ..... 17
- Contractor Safety Qualification Form ..... 19
- Sworn Statement ..... 22
- Trench Safety ..... 24
- Bid Bond ..... 25

Notice of Intent to Award ..... 27

Notice of Award ..... 28

Agreement (Contract) Between Owner and Contractor ..... 29

Payment Bond ..... 37

Performance Bond ..... 41

Opinion of Town Attorney ..... 45

Notice to Proceed (NTP) – Base Bid, Well Rehabilitation ..... 46

Notice to Proceed (NTP) – Additive Alternate, Well 12A ..... 47

General Conditions to EJCDC Standard General Conditions (2018 Edition)

Supplementary Conditions

Technical Specifications

Figures

Appendices

# Technical Specifications Table of Contents


| SECTION | TITLE |
|---|---|
| **DIVISION 1 – GENERAL REQUIREMENTS** | |
| 01000 | Summary of Work |
| 01025 | Measurement and Payment |
| 01030 | Hurricane Preparedness |
| 01050 | Field Engineering and Surveying |
| 01090 | Reference Standards |
| 01200 | Project Meetings |
| 01300 | Submittals |
| 01400 | Quality Control |
| 01410 | Testing Laboratory Services |
| 01500 | Construction Considerations |
| 01520 | Maintenance of Facilities and Sequence of Construction |
| 01530 | Protection of Existing Facilities |
| 01550 | Site Access and Storage |
| 01570 | Traffic Regulations and Maintenance of Traffic |
| 01600 | Material and Equipment |
| 01700 | Project Closeout |
| 01720 | Project Record Drawings |
| **DIVISION 2 – SITE WORK** | |
| 02000 | Construction Facilities and Temporary Controls |
| 02016 | Existing Utilities and Underground Structures |
| 02270 | Erosion and Sediment Control |
| 02485 | Grassing |
| **DIVISION 3 – WELL CONSTRUCTION** | |
| 03000 | Well Construction Sequence |
| 03100 | Drilling |
| 03200 | Well Casing |
| 03300 | Borehole Geophysical Logging and Video Log |
| 03400 | Annular Grout |
| 03500 | Well Development |
| 03600 | Well Screen and Gravel Pack |

## Technical Specifications Table of Contents (continued)


| SECTION | TITLE |
|---|---|
| **DIVISION 4 – TESTING / CHEMICAL TREATMENTS** | |
| 04000 | Pumping Tests |
| 04200 | Well Facility Disinfection and Water Quality Sampling |
| 04300 | Well Abandonment |
| 04400 | Surficial Production Well Acidization |
| **DIVISION 5 –** | |
| 05000 | Formation Water Disposal System |
| **FIGURES** | |
| Figure 1 | Surficial Aquifer Well 12A Site Location Map |
| Figure 2 | Surficial Aquifer Production Well Open Hole Well Construction Details |
| Figure 3 | Surficial Aquifer Production Well Screened Well Construction Details |
| Figure 4 | Surficial Aquifer Production Well Open Hole Well with Liner Construction Details |
| Figure 5 | Final Wellhead Diagram |
| Figure 6 | Surficial Aquifer Well 12A Formation Water Disposal Map |
| Figure 7 | Surficial Aquifer Well 12A Bollard Detail |
| Figure 8 | Survey and Site Plan – Well 12A |
| **APPENDIX** | |
| Table 1 | Well Construction Details (Surficial Aquifer) |
| Exhibit 1 | Well Location Map |
| Exhibit 2 | Well Location Map Water Treatment Plant Site |
| Exhibit 3 | Well Location Map Central Blvd Tank Site |
| Exhibit 4 | Well Location Map Jupiter Village |
| Exhibit 5 | Well Location Map Indian Creek and Loxahatchee River District Wells |
| Exhibit 6 | Well Location Map Indian Creek/Egret Landing |
| Exhibit 7 | Well Location Map The Heights/Abacoa |
| Exhibit 8 | Well Location Map Abacoa |
| Exhibit 9 | Well Location Map Abacoa/Indian Creek Parkway |
| Exhibit 10 | Contractor Daily Work Log, Airlift and Pump Development Logs, Well Disinfection Report Form |

# TOWN OF JUPITER

## Invitation to Bid

Sealed bids will only be accepted at the Town Clerk's Department, 210 Military Trail, Jupiter, Florida 33458:

**Construction of Surficial Aquifer Well 12A**
**and Surficial Wellfield Rehabilitation Program (W2111)**

Until **2:00PM**, Local Time, **January 13, 2021** at which time and place all bids received will be publicly opened and read aloud in the Town Council Chambers. Sealed bids shall be submitted to the Town Clerk, on paper, in accordance with the Instruction to Bidders. Bids received after the time and date specified will not be considered. The face of the envelope shall be addressed as follows:

Town Clerk
Town of Jupiter
210 Military Trail
Jupiter, FL 33458
January 13, 2021 at 2:00PM
Construction of Surficial Aquifer Well 12A and
Surficial Wellfield Rehabilitation Program (W2111)

The nature and scope of this project is:

Furnish all permits, labor, equipment and materials necessary to perform well maintenance, rehabilitation and/or replacement of Surficial Aquifer production wells for the Town of Jupiter, located in Jupiter, Florida. Well maintenance activities may include but are not limited to removal/reinstallation of wellhead including downhole equipment and well piping; pump and motor inspection, repair and/or replacement of well mechanical components including miscellaneous welding, well disinfection and bacteriological clearance. Well rehabilitation activities may include but are not limited to removal/reinstallation of wellhead components, static and dynamic downhole well video, brushing existing well casing, clean-out open hole, chemical treatment of wells, removal/replacement of gravel pack, well development including air lift development, high velocity jetting with simultaneous air lift development and pump development, well performance pump testing, well disinfection and bacteriological clearance, site restoration, and completion of all required work to the extent the well facility has been successfully rehabilitated, returned to service and accepted by the OWNER based on the intent of the contract documents. Well replacement activities may include but are not limited to abandonment of an existing well and replacement with a well approximately 160' deep with the top 120' being 20" PVC casing and bottom 40' being either 12" open hole, open hole with liner or 12" stainless steel screen including well construction permitting, drill site preparation, pilot hole construction and logging, well drilling and construction, well development, step rate pump testing, video logging, well disinfection and testing, well site restoration and all other incidentals as outlined on the bid documents and all appurtenances necessary to complete the Work based on the intent of the contract documents.

Bid Documents will be available on December 8, 2020 at www.demandstar.com. Bid Documents can be downloaded for $5.00 from Demandstar by signing up for a free agency subscription for the Town of Jupiter at www.demandstar.com. Hard copies of Bid Documents may also be purchased from Demandstar by visiting www.demandstar.com or emailing demandstar@onvia.com.

A virtual pre-bid meeting will be held on December 16, 2020 at 10:00 AM using Zoom. Bidders can access the meeting using the following link: https://zoom.us/j/98551606222?pwd=bElpT3NWVlB3NnY4czZMbi9aNjhKUT09. Alternatively, bidders can join the meeting by visiting https://zoom.us/join, enter the Meeting ID 985 5160 6222 and use the password W2111. Attendance at the pre-bid meeting is not a requirement for bid qualification; however, bidders are encouraged to attend.

Questions concerning the bid will be answered by addendum through Demandstar.com. All questions should be directed to Rebecca Wilder, P.E. in writing, via email rebeccaw@jupiter.fl.us (include Project Name in the subject of the email) or by fax (561) 747-5634. Emails should be delivered with a Read Receipt requested to confirm successful receipt by the Town.

Bidders are not required to be a plan holder of record with Demandstar.com; however, bidders are responsible to obtain complete sets of bidding documents in preparation of submitting a bid

Bid Security in the amount of five percent (5%) of the estimated value for the initial contract term ($646,000) must accompany each bid in accordance with the Instructions to Bidders.

The Town of Jupiter reserves the right to waive any irregularities and to reject any and all bids. The Town of Jupiter is an equal opportunity employer.

By Order of the Town Council,
Town of Jupiter

Laura Cahill, Interim Town Clerk

PUBLISHED: Palm Beach Post

DATE: December 6, 2020

# Bid Proposal

**Bidding Company Name:** Centerline Drilling, Inc.

Town of Jupiter Utilities
210 Military Trail
Jupiter, FL 33458

Gentlemen:

The undersigned, as Bidder, hereby declares that the only Persons, company, or parties interested in the Proposal or the Contract to be entered into, as principals, are named herein; and that this Proposal is made without connection with any other person, company, or parties making a Bid or Proposal; and that it is in all respects fair and in good faith without collusion or fraud.

That the Bidder has carefully and to his full satisfaction examined the attached Instructions to Bidders, General Conditions, Supplementary Conditions, detailed Specifications, and Form of Contract and Bond, together with the accompanying plans, and that Bidder has read all addenda issued prior to the opening of Bids; and that Bidder has fully examined the site and the project documents and hereby agrees to furnish, unless otherwise provided, all implements, machinery, equipment, transportation, tools, materials, supplies, labor and other things necessary to the prosecution and completion of the work, to wit:

> Furnish all permits, labor, equipment and materials necessary to perform well maintenance, rehabilitation and/or replacement of Surficial Aquifer production wells for the Town of Jupiter, located in Jupiter, Florida. Well maintenance activities may include but are not limited to removal/reinstallation of wellhead including downhole equipment and well piping; pump and motor inspection, repair and/or replacement of well mechanical components including miscellaneous welding, well disinfection and bacteriological clearance. Well rehabilitation activities may include but are not limited to removal/reinstallation of wellhead components, static and dynamic downhole well video, brushing existing well casing, clean-out open hole, chemical treatment of wells, removal/replacement of gravel pack, well development including air lift development, high velocity jetting with simultaneous air lift development and pump development, well performance pump testing, well disinfection and bacteriological clearance, site restoration, and completion of all required work to the extent the well facility has been successfully rehabilitated, returned to service and accepted by the OWNER based on the intent of the contract documents. Well replacement activities may include but are not limited to abandonment of an existing well and replacement with a well approximately 160' deep with the top 120' being 20" PVC casing and bottom 40' being either 12" open hole, open hole with liner or 12" stainless steel screen including well construction permitting, drill site preparation, pilot hole construction and logging, well drilling and construction, well development, step rate pump testing, video logging, well disinfection and testing, well site restoration and all other incidentals as outlined on the bid documents and all appurtenances necessary to complete the Work based on the intent of the contract documents.

It is proposed that the project herein described shall be constructed for the Unit Prices as follows, all in accordance with the requirements and provisions of the Contract Documents.

## Bid Schedule of Values
## Construction of Surficial Aquifer Well 12A and
## Surficial Wellfield Rehabilitation Program (W2111)

*The following schedule of bid items has been developed to allow the Town to equitably evaluate bids. Individual bid item unit costs will be used to establish the total cost of each scope of work developed to maintain, rehabilitate, and/or replace wells; work orders will be issued as authorization to proceed with the various scopes of work to be completed under this Contract. Town does not guarantee that estimated quantities shown will be utilized in full, or at all. The Town may utilize some or all of these bid items for each scope of work, as the Town deems necessary.*

| Item No. | Item Description | Unit | Estimated Quantity | Unit Price | Extended Value |
|---|---|---|---|---|---|
| **BASE BID ITEMS, GENERAL** | | | | | |
| 1 | Bonds and Insurance (Maximum Allowable 3%) | LS | 1 | $19380.00 | $19380.00 |
| 2 | Indemnification | LS | 1 | $100.00 | $ 100.00 |
| 3 | General Conditions 7 % of Sub-Total Base Bid, Well Rehabilitation Price (Items 5-47)* (Maximum Allowable 8%) | LS | 1 | $27,009.50 | $27,009.50 |
| 4 | Mobilization/Demobilization 7 % of Sub-Total Base Bid, Well Rehabilitation Price (Items 5-47)* (Maximum Allowable 8%) | LS | 1 | $27,009.50 | $27,009.50 |
| | | **Sub-Total Base Bid, General (Item Nos. 1-4)** | | | $73,499.00 |
| **BASE BID ITEMS, WELL REHABILITATION** | | | | | |
| 5 | Remove and Re-Install Pump Discharge Apparatus | Each | 6 | $4000.00 | $24000.00 |
| 6 | Brushing and Swabbing of Well Screen, Riser or Casing | Each | 1 | $800.00 | $800.00 |
| 7 | Surfactant Treatment | Gallon | 500 | $0.50 | $250.00 |
| 8 | Surficial Aquifer Well Acidization Setup | LS | 2 | $4500.00 | $9000.00 |
| 9 | Well Acidization with 32% HCl | Gallon | 2,000 | $5.50 | $11000.00 |
| 10 | Remove Existing Screen and Riser | Each | 1 | $4000.00 | $4000.00 |
| 11 | Clean Out Open Hole to Total Depth | Foot | 50 | $30.00 | $1500.00 |

***Bidder shall indicate the percentage (%) in the blank provided on the Bid Form for Pay Items 3 and 4. Refer to Section 01025 Measurement and Payment of the technical specifications for additional detail for all Pay Items**

## Bid Schedule of Values (Continued)
## Construction of Surficial Aquifer Well 12A and
## Surficial Wellfield Rehabilitation Program (W2111)

| Item No. | Item Description | Unit | Estimated Quantity | Unit Price | Extended Value |
|---|---|---|---|---|---|
| 12 | Drill 6-Inch Diameter Pilot Hole to 200-feet, Geophysical Logging and Abandonment. | LS | 1 | $10,000.00 | $10,000.00 |
| 13 | Furnish, Install, and Grout In Place 30-inch Steel Surface Casing to 50-feet | FT | 50 | $570.00 | $28,500.00 |
| 14 | Drill Nominal 28-inch Diameter Borehole Using Mud Rotary Method | FT | 70 | $150.00 | $10500.00 |
| 15 | Furnish and Install 20-inch Diameter Schedule 40 PVC Well Casing | FT | 120 | $125.00 | $15000.00 |
| 16 | Cement Grout 20-inch Diameter Schedule 40 PVC Well Casing In Place | 94 lb. sack | 250 | $25.00 | $6250.00 |
| 17 | Drill Nominal 12-Inch Diameter Borehole to 160-feet Using Reverse Air Method | FT | 40 | $125.00 | $5000.00 |
| 18 | Furnish and Install 6-inch Diameter 316 Stainless Steel Screen and Riser. | Foot | 100 | $60.00 | $6000.00 |
| 19 | Furnish and Install 12-inch Diameter 316 Stainless Steel Screen | Foot | 40 | $200.00 | $8000.00 |
| 20 | Furnish and Install 12-inch Diameter SDR17 Certa-Lok PVC Riser Casing | Foot | 120 | $125.00 | $15000.00 |
| 21 | Furnish and Install Gravel Pack for Well Screen | Cubic Foot | 200 | $30.00 | $6000.00 |
| 22 | Drill nominal 19-inch Diameter Borehole Using Reverse Air Method | Foot | 40 | $125.00 | $5000.00 |
| 23 | Furnish and Install Gravel Back Plug for 12-inch Diameter Liner Placement | Cubic Foot | 200 | $30.00 | $6000.00 |
| 24 | Furnish and Install 12-inch Diameter Schedule 40 PVC Liner | Foot | 50 | $100.00 | $5000.00 |
| 25 | Cement Grout | 94 lb. Sk | 100 | $25.00 | $2500.00 |

## Bid Schedule of Values (Continued)
## Construction of Surficial Aquifer Well 12A and
## Surficial Wellfield Rehabilitation Program (W2111)

| Item No. | Item Description | Unit | Estimated Quantity | Unit Price | Extended Value |
|---|---|---|---|---|---|
| 26 | Drill Out Gravel Back-Plug | Foot | 75 | $ 20.00 | $ 1500.00 |
| 27 | Airlift Development | Hour | 200 | $ 225.00 | $ 45000.00 |
| 28 | Jetting with Simultaneous Airlift Development | Hour | 50 | $ 225.00 | $ 11250.00 |
| 29 | Pump Development | Hour | 200 | $ 200.00 | $ 40000.00 |
| 30 | Step Rate Test | Hour | 10 | $ 200.00 | $ 2000.00 |
| 31 | Well Disinfection | Each | 6 | $ 950.00 | $ 5700.00 |
| 32 | Bacteriological Sampling and Testing | Each | 10 | $ .00 | $ .00 |
| 33 | Remove and Reinstall Transfer Pump/HSP Including Disinfection | Each | 1 | $ 1500.00 | $ 1500.00 |
| 34 | Certified Welding Services | Hour | 20 | $ 90.00 | $ 1800.00 |
| 35 | Flow Meter Calibration Services | Each | 2 | $ 250.00 | $ 500.00 |
| 36 | Major Site Restoration | Each | 2 | $ 750.00 | $ 1500.00 |
| 37 | Minor Site Restoration | Each | 3 | $ 200.00 | $ 600.00 |
| 38 | Downhole Video | Each | 6 | $ 1500.00 | $ 9000.00 |
| 39 | Extra work by Drilling Crew (Foreman and one Crew Member) with Equipment | Hour | 10 | $ 175.00 | $ 1750.00 |
| 40 | Extra work by Drilling Crew (Foreman and one Crew Member) without Equipment | Hour | 40 | $ 50.00 | $ 2000.00 |
| 41 | Standby Time, Rig and Crew onsite | Hour | 10 | $ 5.00 | $ 50.00 |
| 42 | Standby Time, Rig and Crew offsite | Hour | 10 | $ .00 | $ .00 |
| 43 | Pump/Motor Retrieval | Hour | 10 | $ 175.00 | $ 1750.00 |

## Bid Schedule of Values (Continued)
## Construction of Surficial Aquifer Well 12A and
## Surficial Wellfield Rehabilitation Program (W2111)

| Item No. | Item Description | Unit | Estimated Quantity | Unit Price | Extended Value |
|---|---|---|---|---|---|
| 44 | Unidentified Parts Allowance | LS | 1 | $75,000.00 | $ 75,000.00 |
| 45 | Disassembly and Inspection of Pump | Each | 6 | $ 350.00 | $ 2100.00 |
| 46 | Pump/Motor Maintenance in Shop | Hour | 25 | $ 90.00 | $ 2250.00 |
| 47 | Licensed Electrician Services | Hour | 10 | $ 130.00 | $ 1300.00 |
| | **Sub-Total Base Bid, Well Rehabilitation Price: (Item Nos. 5-47) =** | | | | $385,850.00 |
| | **Total Base Bid Price: (Item Nos. 1-47) =** | | | | $ 459,349.00 |

| Item No. | Item Description | Unit | Estimated Quantity | Unit Price | Extended Value |
|---|---|---|---|---|---|
| **ADDITIVE ALTERNATE BID ITEMS, WELL 12A CONSTRUCTION (OPEN HOLE SCENARIO)** | | | | | |
| 48 | Mobilization/Demobilization (Well 12A) (Not to Exceed 10% of Well 12A Construction Cost) | LS | 1 | $ 15000.00 | $ 15000.00 |
| 49 | Drill 6-Inch Diameter Pilot Hole to 200-feet, Geophysical Logging and Abandonment. | LS | 1 | $ 10,000.00 | $ 10,000.00 |
| 50 | Furnish, Install, and Grout In Place 30-inch Steel Surface Casing to 50-feet | FT | 50 | $ 570.00 | $ 28500.00 |
| 51 | Drill Nominal 28-inch Diameter Borehole Using Mud Rotary Method | FT | 70 | $ 150.00 | $ 10,500.00 |
| 52 | Furnish and Install 20-inch Diameter Schedule 40 PVC Well Casing | FT | 120 | $ 125.00 | $ 15000.00 |
| 53 | Cement Grout 20-inch Diameter Schedule 40 PVC Well Casing In Place | 94 lb. sack | 250 | $ 25.00 | $ 6250.00 |
| 54 | Drill Nominal 12-Inch Diameter Borehole to 160-feet Using Reverse Air Method | FT | 40 | $ 125.00 | $ 5000.00 |

## Bid Schedule of Values (Continued)
## Construction of Surficial Aquifer Well 12A and
## Surficial Wellfield Rehabilitation Program (W2111)

| Item No. | Item Description | Unit | Estimated Quantity | Unit Price | Extended Value |
|---|---|---|---|---|---|
| 55 | Formation Water Disposal System (Well 12A) | Each | 1 | $ 16,000.00 | $ 16,000.00 |
| 56 | Airlift Development | Hour | 200 | $ 225.00 | $ 45000.00 |
| 57 | Pump Development | Hour | 200 | $ 200.00 | $ 40000.00 |
| 58 | Step Rate Test | Hour | 10 | $ 200.00 | $ 2000.00 |
| 59 | Downhole Video | Each | 1 | $ 1500.00 | $ 1500.00 |
| 60 | Well Disinfection and Bacteriological Testing (Well 12A) | LS | 1 | $ 6,000.00 | $ 6,000.00 |
| 61 | Well Water Quality Sampling (Well 12A) | LS | 1 | $ 6000.00 | $ 6000 00 |
| 62 | Well Abandonment (Well 12) | LS | 1 | $ 15000.00 | $ 15000.00 |
| 63 | Final Temporary Wellhead (Well 12A) | LS | 1 | $ 5000.00 | $ 5000.00 |
| 64 | Site Restoration (Well 12A) | Each | 1 | $ 5000.00 | $ 5000.00 |

**TOTAL ADDITIVE ALTERNATE, WELL 12A (OPEN HOLE SCENARIO) BID PRICE: (ITEM NOS. 48-64) =** $ 231,750.00

***Bidder shall indicate the percentage (%) in the blank provided on the Bid Form for Pay Items 3 and 4. Refer to Section 01025 Measurement and Payment of the technical specifications for additional detail for all Pay Items**

THIS SPACE IS INTENTIONALLY LEFT BLANK.
PROCEED TO NEXT PAGE.

## Bid Schedule of Values (Continued)
## Construction of Surficial Aquifer Well 12A and
## Surficial Wellfield Rehabilitation Program (W2111)

**BID PRICE SUMMARY**

**Total Base Bid, Well Rehabilitation Price: (Item Nos. 1-47) =** $459349.00

**Total Base Bid, Well Rehabilitation Price (Items 1-47) in Words:** _____

Four hundreed fifty nine thousand three hundred forty nine — 00/100

**Total Additive Alternate Bid Well 12A (Open Hole Scenario**) Price: (Item Nos. 48-64) =** $231,750.00

**Total Additive Alternate Bid Well 12A (Open Hole Scenario**) Price: (Item Nos. 48-64) in Words:** _____

two hundreed thirty one thousand Seven Hundreed fifty — 00/100

### MUST CHECK ONE OF THE FOLLOWING:

BACTERIOLOGICAL CLEARANCE LABORATORY

☐ Approved State Department of Health Laboratory (DOH Certified)

☑ Town of Jupiter Utilities Laboratory (DOH Certified) - Use of Town of Jupiter Water System Lab will result in no charge for Item No. 32 on the Schedule of Values.

Please note that Bidder is responsible to utilize DOH Certified laboratory for work associated with Bid Item Nos. 60 & 61

## List of Subcontractors/Suppliers

The Bidder shall list below the name and the location of the place of business of each subcontractor who will perform work or labor or render service to the prime contractor in or about the construction of the Work or improvement, or a subcontractor licensed by the State who, under subcontract to the prime contractor, specially fabricates and installs a portion of the Work or improvement according to detailed drawings contained in the plans and specifications, in an amount in excess of two percent (2%) of the prime contractor's total bid. Failure to comply with this requirement may render the Bid non-responsive and may cause its rejection. If Prime Contractor will self-perform any of the work listed below it shall be indicated as self-perform under Subcontractor License Number.

| Work to be Performed | Subcontractor License Number | Percent of Total Contract | Subcontractor/Supplier Name & Address |
|---|---|---|---|
| N/A -- No subcontractors over 2% of total bid | | | |
| | | | |
| | | | |
| | | | |
| | | | |
| | | | |
| | | | |
| | | | |

Note: Provide licenses, certifications, experience, and qualification forms for those subcontractors listed above. Attach additional pages as needed.

## Qualification Requirements

(Complete these pages in their entirety and include with Bid. Attach copies of applicable Licenses)

THE UNDERSIGNED GUARANTEES THE TRUTH AND ACCURANCY OF ALL STATEMENTS AND ANSWERS HEREIN CONTAINED:

A. Any information for which OWNER cannot corroborate is grounds for rejection of Bid. (Use additional sheets as needed to provide the required information.)

1. State the numbers of years your organization has been doing business in the State of Florida:
   18 years

2. State the location of the office from which this Contract will be managed.
   1696 Old Okeechobee Road #3C, West Palm Beach, Florida 33409

3. State the number of employees available to complete the work contemplated by this contract.
   6

4. State Name and years of experience of Bidder's Project Manager to be assigned to this Project. Provide the proposed Project Manager's experience for at least four (4) similar projects within the past five (5) years. Provide information as to the role of the individual for the stated previous projects and his/her intended role for this Contract. Provide reference contact information for Project Manager on previous projects listed. If in Owner's opinion the proposed Project Manager is not qualified to act at Project Manager for this Contract based on the information presented by the Bidder and Owner's verification of references, Bidder shall propose another Project Manager. Owner and Bidder shall agree on the Project Manager for this Contract before the Contract is awarded.

   Project Manager's: Name: John Say, Jr.

   Years of Experience in this type of work: 35 years

   Years of Experience as a Project Manager in this type of work: 18 years

5. Only Bidders who are qualified and have completed at least four (4) similar projects over the last five (5) years or equivalent experience as determined by the Town to be in the Town's sole best interest will be considered for award.

   NOTE: In order to be deemed acceptable for the purpose of determining Bidder Qualification, similar projects shall be listed below and have all information completed (blanks correctly filled in) including contact names and telephone numbers of both the Owner and Engineer.

   Names and experience of Major Subcontractors (proposed to perform 2% or more of the work of this contract) to be used on this project shall also be included in the Bid Proposal Package. Copy this form and attach additional pages as needed. Provide Four (4) similar projects for major subcontractors.

## Qualification Requirements (Continued)

**As Bidder, we certify the following:**

(1) NAME & LOCATION OF PROJECT: City of Coral Springs Water Supply Well Rehabilitation

Supply Wells throughout the City of Coral Springs

VALUE AND SCOPE OF WORK: $250,000.00 per year - 2 year contract

Water Supply Well Rehabilitation

BIDDER WAS: [✓] PRIME CONTRACTOR [ ] PRIME CONTRACTOR (CHECK ONE)

NAME OF BIDDER'S PROJECT MANAGER: John Say, Jr. / Matthew Smith

DATE OF NOTICE TO PROCEED/CONTRACT START: 07/20/2016

OWNER OF PROJECT: City of Coral Springs

OWNER CONTACT NAME: Alavn Jones

OWNER PHONE NUMBER: 954-345-2162

OWNER EMAIL: ajones@coralsprings.org

OWNER ADDRESS:

3800 NW 85th Avenue

Coral Springs, Florida 33065

ADDITIONAL INFORMATION:

Renewed for 2 more terms from 2018 - 2020 and 2020 to 2022

SPACE INTENTIONALLY LEFT BLANK.
PROCEED TO NEXT PAGE.

## Qualification Requirements (Continued)

(2) NAME & LOCATION OF PROJECT: Solid Waste Authority

Wells for Solid Waste Authority of Palm Beach

VALUE AND SCOPE OF WORK: $184,317.00 - Well Rehabilitation

BIDDER WAS: [✓] PRIME CONTRACTOR [ ] PRIME CONTRACTOR (CHECK ONE)

NAME OF BIDDER'S PROJECT MANAGER: John Say Jr. / Matthew Smith / Dean Federer

DATE OF NOTICE TO PROCEED/CONTRACT START: 02/01/2019

OWNER OF PROJECT: Solid Waste Authority

OWNER CONTACT NAME: Jamie R. Sullivan, PG

OWNER PHONE NUMBER: 561-640-4000 - Ext 4632

OWNER EMAIL: jsullivan@swa.org

OWNER ADDRESS:

7501 N Jog Road

West Palm Beach, Florida 33412

ADDITIONAL INFORMATION:

SPACE INTENTIONALLY LEFT BLANK.
PROCEED TO NEXT PAGE.

## Qualification Requirements (Continued)

(3) NAME & LOCATION OF PROJECT: CSID Well #5 Re-Development

10100 N.W. 6th Street Coral Springs, FL 33065

VALUE AND SCOPE OF WORK: $32,668.00 / Re-development of Well #5

BIDDER WAS: [ ] PRIME CONTRACTOR [✓] Sub PRIME CONTRACTOR (CHECK ONE)

NAME OF BIDDER'S PROJECT MANAGER: John Say, Jr. / Dean Federer

DATE OF NOTICE TO PROCEED/CONTRACT START: September 2019

OWNER OF PROJECT: Coral Springs Improvement District

OWNER CONTACT NAME: Rick Olson, P.E.

OWNER PHONE NUMBER: 561-997-6433 / 954-647-9530

OWNER EMAIL: rolson@globaltechdb.com

OWNER ADDRESS:

6001 Broken Sound Parkway NW

Suite 610

Boca Raton, Florida 33487

ADDITIONAL INFORMATION:

SPACE INTENTIONALLY LEFT BLANK.
PROCEED TO NEXT PAGE.

## Qualification Requirements (Continued)

(4) NAME & LOCATION OF PROJECT: The Fort Lauderdale Aquatic Center

501 Seabreeze Blvd. Ft Lauderdale, Florida 33316

VALUE AND SCOPE OF WORK: $155,914.00 / Supply Wells, Injection Wells, and Pump and Motor

BIDDER WAS: [ ] PRIME CONTRACTOR [✓] PRIME CONTRACTOR (CHECK ONE)
Sub

NAME OF BIDDER'S PROJECT MANAGER: John Say, Jr.

DATE OF NOTICE TO PROCEED/CONTRACT START: 06/10/19 & 06/15/20

OWNER OF PROJECT: City of Ft, Lauderdale

OWNER CONTACT NAME: Mike (M.J.) Jaques

OWNER PHONE NUMBER: 941-474-9306

OWNER EMAIL: install@symbiontservice.com

OWNER ADDRESS:

4372 N Access Rd
Englewood, FL 34224

ADDITIONAL INFORMATION:

SPACE INTENTIONALLY LEFT BLANK.
PROCEED TO NEXT PAGE.

## Proposal (Continued)

If awarded the Contract, the undersigned agrees to execute the attached Agreement/Contract within fifteen (15) calendar days from the date set forth in the Notice of Intent to Award or Notice of Award, which ever one is received first, and to fully complete all necessary work within the time limits specified below after date of written Notice to Proceed, with such extensions of time as are provided for in the General Conditions.

**Contract Durations for Well Rehabilitation (Base Bid) Scope:**
(Applies to all Work associated with Well Maintenance and Rehabilitation)

| | |
|---|---|
| Substantial Completion: | 365 calendar days from Notice to Proceed |
| Final Completion: | 365 calendar days from Notice to Proceed |

**Contract Durations for Well 12A (Additive Alternate Bid) Scope:**
(Applies to all Work associated with Abandonment of Well 12 and Construction of 12A):

| | |
|---|---|
| Substantial Completion: | 105 calendar days from Notice to Proceed |
| Final Completion: | 135 calendar days from Notice to Proceed |

The undersigned understands the Contract time starts on the date of Notice to Proceed. The undersigned understands the Contract time includes time for Contractor to obtain permits, submit and obtain shop drawing approvals, order materials, receive deliveries, complete all Work required of the Contract, and to close out the Contract.

There is enclosed a bid guarantee consisting of five percent (5%) of the estimated value for the initial contract term ($646,000).

The undersigned agrees that all bid documents issued for this project, including addenda, have been reviewed and site visits performed, as necessary to provide a comprehensive bid. The undersigned acknowledges receipt of 1 (insert number) Addenda for this project.

The undersigned furthermore agrees that, in case of failure on undersigned's part to sign said contract and provide required bonds, power of attorney's, and insurance within (15) days after receipt of a Notice of Intent to Award or a Notice of Award, whichever comes first, the check, bond, or other security accompanying undersigned's Bid and the money payable thereon, shall become the property of the Town, by forfeit as agreed and liquidated damages; otherwise the check or bond accompanying undersigned's Bid shall be returned to the undersigned.

The undersigned acknowledges that payments made by the Town of Jupiter will be made via electronic funds transfers (EFT) and vendor will provide the Town of Jupiter with the information required to make EFT payments.

The undersigned, if awarded the contract, agrees to furnish at time of signing the contract, a payment bond and a performance bond, each in the amount of 100% of the contract value as set forth in "Instructions to Bidders".

The undersigned is aware that the Inspector General of Palm Beach County has the authority to investigate and audit matters relating to the negotiation and performance of this contract and in furtherance thereof may demand and obtain records and testimony from the contractor and its subcontractors and lower tier subcontractors. The contractor understands and agrees that in addition to other remedies and consequences

provided by law, the failure of the contractor or its subcontractors or lower tier subcontractors to fully cooperate with the Inspector General when requested may be deemed by the municipality to be a material breach of this contract justifying its termination.

The undersigned states that this bid proposal is the only proposal for this project in which he is interested and certifies that all of the information provided in this bid proposal is true and correct.

SUBMITTAL DATE 01/13/2021

FIRM NAME Centerline Drilling, Inc.

BUSINESS ADDRESS 1696 Old Okeechobee Road #3C, West Palm Beach, Florida 33409

BUSINESS TELEPHONE 561-615-0988

FIRM'S FEIN 42-1551177

SIGNATURE OF RESPONSIBLE OFFICIAL

PRINT NAME AND TITLE John Say, Jr., President

EMAIL ADDRESS OF RESPONSIBLE OFFICIAL ctrlinedrilling@aol.com

STATE OF INCORPORATION Florida

FULL NAMES AND ADDRESSES OF PERSONS OR PARTIES INTERESTED IN THE FOREGOING BID, AS PRINCIPALS:

John Say, Jr. President

17042 Key Lime Blvd., Loxahatchee, Florida 33470

SPACE INTENTIONALLY LEFT BLANK.
PROCEED TO NEXT PAGE.

# Contractor Safety Qualifications/Requirements

## 1. APPLICABILITY

Any contractors performing maintenance, repair, turnaround, major renovations, or specialty work on or adjacent to the hazardous chemical process at the Jupiter Water Treatment plant is subject to the contractor safety requirements of the Environmental Protection Agency Risk Management Program (40 CRF 68.87) and the Occupational Safety and Health Administration's Process Safety Management Program (29 CRF 1910.119(h)).

**CONTRACTOR SHALL SUBMIT A COMPLETED COPY OF THE ATTACHED "CONTRACTOR SAFETY QUALIFICATION FORM" WITH THEIR BID. FAILURE TO INCLUDE THIS FORM WITH THE BID IS GROUNDS FOR DISQUALIFICATION.**

## 2. OWNER RESPONSIBILITY

(A) Selecting a Contractor:

1. When selecting a contractor, obtain and evaluate information regarding the contractor's safety program.

(B) Informing a Contractor:

1. Inform the contractor of the known potential fire, explosion, or toxic release hazards related to the contractor's work and regulated process.

2. Explain to the contractor the applicable provisions of the facilities emergency response program (i.e. alarms, evacuation routes, etc.)

3. Inform the contractor of the facility's safe work practices of operations such as:
    - Confined space entry
    - Equipment/line opening
    - Lockout/tagout Program
    - Control over entry into regulated (i.e. hazardous) process areas
    - Hot Work Permit

(C) Evaluating a Contractor's Performance

1. Evaluate the contractor's performance in fulfilling their requirements under this regulation.

## 3. CONTRACTOR RESPOSIBILITY

(A) Assure that each of the contractor's employee's is trained in the work practices to safely perform his/her job, and to document that each employee understood the training. This documentation will include the name of employee, date of the training, and means used to verify that the employee understood the training.

(B) Assure that each of the contractor's employees are instructed in the known potential fire, explosion, or toxic release hazards related to his/her job and the process, and the applicable provisions of the emergency response plan.

(C) Assure that Contractor's employees and subcontractor's/laborers attend the WTP safety orientation and follow the facility's safety rules including safe work practices such as control over entry into hazardous chemical process areas, lockout/tagout, equipment/line opening, confined space safety, and hot work permit.

(D) Advise the facility owner of any unique hazard presented by the contractor's work, or of any hazards found by the contractor.

(E) Obtain and evaluate information pertaining to subcontractor's safety programs.

(F) Assure that subcontractor's and laborers are trained in their work practice to safety perform their jobs.

**4. CONTRACTOR SUBMITTALS**

(A). Training Certification

Prior to the commencement the contractor shall certify in writing to the Owner that those employees involved in work on or around the hazardous chemical process at the Jupiter Water Treatment Plant have successfully completed training in accordance with 40 CFR 68.87(c) and 29 CFR 1910.119(h)(3).

(B). Records Maintenance

The Contractor shall maintain a record of those employees who successfully completed the above training. These records must include the following information:

- Name of the employee
- Contents of training
- Date of training
- Means used to verify that the employee understood the training

(C). Additional Responsibilities

1. Contractor must immediately inform the Owner of all contract employee injuries or illness resulting from work performed on or around and hazardous chemical process.

2. Contractor must immediately inform the Owner of any injuries resulting from any work at the facility.

3. Contractor employees, subcontractors, and laborers must participate in a mandatory on-site safety orientation conducted by the Owner before work begins. It is the Contractor's responsibility to schedule these meetings with the Owner, and it is the Contractor's responsibility to ensure <u>all</u> persons working on the Water Treatment Plant site under this contract have attended the mandatory on-site safety orientation. Failure to do so will result in removal of those persons who have not received the training from the job site until such time as the training is obtained.

## Contractor Safety Qualification Form

**SECTION 1: COMPANY INFORMATION**

Company Name: Centerline Drilling, Inc.

Address 1: 1696 Old Okeechobee Rd.

Address 2: #3C

City, State, Zip: West Palm Beach, Florida 33409

Telephone No.: 561-615-0988

Fax No.: 561-429-8107

**SECTION 2: NAME(S) AND RELATIONSHIPS OF PARENT COMPANY, AFFILIATES, SUBSIDIARIES, PARTNERS**

Company Name: N/A

Address: N/A

City, State, Zip: N/A

Relationship: N/A

Company Name: N/A

Address: N/A

City, State, Zip: N/A

Relationship: N/A

**SECTION 3: INSURANCE COVERAGE**

3.1 Please attach certificates showing the extent of coverage, exclusions and deductibles for the following:

- Commercial Liability Insurance
- Automobile Liability Insurance
- Contractors Pollution Liability Insurance
- Workman's Compensation Insurance

3.2 How long have you been covered by your current provider of Workman's Compensation Insurance?

12/04/2012

3.3 List the Experience Modification Ratio (EMR) that has been applied to your company's workman's compensation insurance policy for the past five years:

| Year | Intrastate EMR | Interstate EMR | Comments |
|---|---|---|---|
| 2018 | .98 | N/A | See Attached Letter |
| 2019 | .98 | N/A | |
| 2020 | .98 | N/A | |
| | | | |
| | | | |

3.4 List the contact information for an insurance broker who can verify your EMR's:

Name: Howard Leasing, Inc. - Sondra Kelley
Address 1: 6302 Manatee Avenue West
Address 2: Suite K
City, State, Zip: Bradenton, Florida 34209
Telephone No.: 941-761-7704
If you do not have an EMR, please explain:

**SECTION 4: INJURY AND FATALITY INFORMATION**

4.1 Please transfer the numbers and rates of injuries and illnesses from your firm's OSHA No. 200 Logs to the table below:

| Statistic | Year: 2018 | | Year: 2019 | | Year: 2020 | |
|---|---|---|---|---|---|---|
| | No. | Rate | No. | Rate | No. | Rate |
| Lost Workday Cases | 0 | 0 | 0 | 0 | 0 | 0 |
| Restricted Workday Cases | 0 | 0 | 0 | 0 | 0 | 0 |
| Medical Treatment (not First Aid) Cases | 0 | 0 | 0 | 0 | 0 | 0 |
| Total Illness Cases | 0 | 0 | 0 | 0 | 0 | 0 |
| Total Recordable Cases | 0 | 0 | 0 | 0 | 0 | 0 |
| Fatalities | 0 | 0 | 0 | 0 | 0 | 0 |

4.2 If your company has had fatalities in the past three years include location, cause and corrective actions in the space below:

N/A

## Contractor Safety Qualification Form (Continued)

**SECTION 5: SAFETY MEETINGS**

5.1 Do you require that *documented* safety meetings be held for:

- Field Supervisors? ✓ Yes __ No Frequency: Weekly
- Employees? ✓ Yes __ No Frequency: Weekly
- New Hires? ✓ Yes __ No Frequency: at the time of hire
- Subcontractors? ✓ Yes __ No Frequency: at the time of hire

**SECTION 6: SAFETY AUDITS**

6.1 Will a representative of your company audit safety practices on this job?

✓ Yes __ No

Name: John Say, Jr. Title: President

How frequently will the representative visit the project site? Weekly

**SECTION 7: HEALTH AND SAFETY PROGRAM**

7.1 Does the company have a health and safety program? If yes, please give details below. (The contractor is encouraged to attach a copy of the program to satisfy this requirement).

Yes

Safety and Health Training, First Aid procedures and instructions, Safety awareness policy, employee acknowledgment and warning forms, accident investigation report and instructions for completing the accident report, record keeping procedures, table of contents

7.2 Please give the name and telephone number of your company's health and safety officer, if any:

Name: John Say, Jr. Title: President

Telephone No.: 561-436-6388

**SECTION 8: HEALTH AND SAFETY CITATIONS**

8.1 Attach a list of any State or Federal Health and Safety citations received during the past three years.

N/A

**SECTION 9: SIGNATURE OF COMPANY OFFICER**

I certify that to the best of my knowledge, information, and belief formed after reasonable inquiry, the information submitted is true, accurate, and complete.

Name (print): John Say, Jr. Title: President

Signature: [signature] Date: 11/13/21

## Sworn Statement

PURSUANT TO SECTION 287.133(3)(a),FLORIDA STATUES,
ON PUBLIC ENTITY CRIMES

THIS FORM MUST BE SIGNED AND SWORN TO IN THE PRESENCE OF A NOTARY PUBLIC OR OTHER OFFICIAL AUTHORIZED TO ADMINISTER OATHS.

1. This sworn statement is submitted to Town of Jupiter
[print name of the public entity]

by John Say, Jr. President
[print individual's name and title]

for Centerline Drilling, Inc.
[print name of entity submitting sworn statement]

whose business address is 1696 Old Okeechobee Road #3C

West Palm Beach, Florida 33409

and (if applicable) its Federal Employer Identification Number (FEIN) is: 42-1551177
(If the entity has no FEIN, include the Social Security Number of the individual signing this sworn Statement: _____.)

2. I understand that a "public entity crime" as defined in Paragraph 287.133(1)(g), **Florida Statutes**, means a violation of any state or federal law by a person with respect to and directly related to the transaction of business with any public entity or with an agency or political subdivision of any other state or of the United States, including, but not limited to, any bid or contract for goods or services to be provided to any public entity or an agency or political subdivision of any other state or of the United States and involving antitrust, fraud, theft, bribery, collusion, racketeering, conspiracy, or material misrepresentation.

3. I understand that "convicted" or "conviction" as defined in Paragraph 287.133(1)(b), **Florida Statutes**, means a finding or guilt or a conviction of a public entity crime, with or without an adjudication of guilt, in any federal or state trial court of record relating to charges brought by indictment or information after July 1, 1989, as a result of a jury verdict, nonjury trial, or entry of a plea of guilty or nolo contendere.

4. I understand that an "affiliate" as defined in Paragraph 287.133(1)(a), **Florida Statutes**, means:
   1. A predecessor or successor of a person convicted of a public entity crime: or
   2. An entity under the control of any natural person who is active in the management of the entity and who has been convicted of a public entity crime. The term affiliate includes those officers, directors, executives, partners, shareholders, employees, members, and agents who are active in the management of an affiliate. The ownership by one person of shares constituting a controlling interest in another person, or a pooling of equipment or income among persons when not for fair market value under an arm's length agreement, shall be a prima facie case that one person controls another person. A person who knowingly enters into a joint venture with a person who has been convicted of a public entity crime in Florida during the preceding 36 months shall be considered an affiliate.

5. I understand that a "person" as defined in Paragraph 287.133(1)(e), **Florida Statutes**, means any natural person or entity organized under the laws of any state or of the United States with the legal power to enter into a binding contract and which bids or applies to bid on contracts for the provision of goods or services let by a public entity, or which otherwise transacts or applies to transact business with a public entity. The term "person" includes those officers, directors, executives, partners, shareholders, employees, members, and agents who are active in management of an entity.

6. Based on information and belief, the statement which I have marked below is true in relation to the entity submitting this sworn statement. **[indicate which statement applies.]**

   ✓ Neither the entity submitting this sworn statement, nor any officers, directors, executives, partners, shareholders, employees, members, or agents who are active in the management of the entity, nor any affiliate of the entity, has been charged with and convicted of a public entity crime subsequent to July 1, 1989.

   ___ The entity submitting this sworn statement, or one or more of its officers, directors, executives, partners, shareholders, employees, members, or agents who are active in the management of the entity, or an affiliate of the entity has been charged with and convicted of a public entity crime subsequent to July 1, 1989.

   ___ The entity submitting this sworn statement, or one or more of its officers, directors, executives, partners, shareholders, employees, members, or agents who are active in the management of the entity, or an affiliate of the entity has been charged with and convicted of a public entity crime subsequent to July 1, 1989. However, there has been a subsequent proceeding before a Hearing Officer of the State of Florida, Division of Administrative Hearings and the Final Order entered by the Hearing Officer determined that it was not in public interest to place the entity submitting this sworn statement on the convicted vendor list.
   **[attach a copy of the final order]**

**I UNDERSTAND THAT THE SUBMISSION OF THIS FORM TO THE CONTRACTING OFFICER FOR THE PUBLIC ENTITY IDENTIFIED IN PARAGRAPH 1 (ONE) ABOVE IS FOR THAT PUBLIC ENTITY ONLY AND, THAT THIS FORM IS VALID THROUGH DECEMBER 31 OF THE CALENDAR YEAR IN WHICH IT IS FILED, I ALSO UNDERSTAND THAT I AM REQUIRED TO INFORM THE PUBLIC ENTITY PRIOR TO ENTERING INTO A CONTRACT IN EXCESS OF THE THRESHOLD AMOUNT PROVIDED IN SECTION 287.017, FLORIDA STATUTES FOR CATEGORY TWO OF ANY CHANGE IN THE INFORMATION CONTAINED IN THIS FORM.**

[signature]

Sworn to and subscribed before me this 13 day of January, 2021

Personally known John Say Jr.

OR Produced Identification _____ Notary Public – State of Florida

My commission expires 11/12/23

Kim Federer

(Printed typed or stamped commissioned name notary public)

KIM FEDERER
MY COMMISSION # GG 930923
EXPIRES: November 12, 2023
Bonded Thru Notary Public Underwriters

## Trench Safety

Bidder acknowledges that included in the various items of the proposal and in the Total Bid Price are costs for complying with the Florida Trench Safety Act (90-96, Laws of Fla.) effective October 1, 1990. The bidder further identifies the costs to be summarized below.

| | TRENCH SAFETY MEASURE EXTENDED (DESCRIPTION) | UNITS OF MEASURE (LF, SY) | UNIT (QUANTITY) | UNIT COST | COST |
|---|---|---|---|---|---|
| A. | Sloping | LF | 1 | 2.00 | 2.00 |
| B. | | | | | |
| C. | | | | | |
| D. | | | | | |

Failure to complete the above may result in the bid being declared non-responsive.

SPACE INTENTIONALLY LEFT BLANK.
PROCEED TO NEXT PAGE.

# Bid Bond

**This page should be clearly marked with a tab for easy identification during the bid opening process.*

| **Bidder** | **Surety** |
|---|---|
| Name: Centerline Drilling, Inc.<br>Phone: 561-615-0988<br>Address *(principal place of business)*:<br>1696 Old Okeechobee Road, #3C<br>West Palm Beach, FL 33409 | Name: The Ohio Casualty Insurance Company<br>Phone: 772-822-5610<br>Address *(principal place of business)*:<br>9721 Executive Center Drive, Ste 105<br>St. Petersburg, FL 33702 |
| **Owner** | **Bid** |
| Name: Town of Jupiter<br>Phone: 561-746-5134<br>Address *(principal place of business)*:<br>Town Hall<br>210 Military Trail<br>Jupiter, FL 33458<br>Water Treatment Plant<br>17403 Central Blvd.<br>Jupiter, FL 33458 | Project *(name and location)*:<br>Construction of Surficial Aquifer Well 12A and Surficial Wellfield Rehabilitation Program (W2111)17403 Central Blvd.,<br>Jupiter, Florida<br>Bid Due Date: January 13, 2021 |

**Bond Number:** BB04213

Penal Sum: 5% of Initial Contract Term Estimated Value ($646,000)

Date of Bond: January 13, 2021

Surety and Bidder, intending to be legally bound hereby, subject to the terms set forth in this Bid Bond, do each cause this Bid Bond to be duly executed by an authorized officer, agent, or representative. Surety affirms it is authorized to do business in the State of Florida, and the Town of Jupiter, and as having an Agent resident therein.

| Bidder | Surety |
|---|---|
| Centerline Drilling, Inc. *(Full formal name of Bidder)* | The Ohio Casualty Insurance Company *(Full formal name of Surety) (corporate seal)* |
| By: *(Signature)* | By: *(Signature) (Attach Power of Attorney)* |
| Name: John Say R. John Say, Jr. *(Printed or typed)* | Name: Robert Barra *(Printed or typed)* |
| Title: President | Title: Attorney In Fact |
| Attest: Kim Federer *(Signature)* | Attest: *(Signature)* |
| Name: Kim Federer *(Printed or typed)* | Name: Lynn Shuckey *(Printed or typed)* |
| Title: Witness | Title: Witness |

*Notes: (1) Note: Addresses are to be used for giving any required notice. (2) Provide execution by any additional parties, such as joint venturers, if necessary.*

This Power of Attorney limits the acts of those named herein, and they have no authority to bind the Company except in the manner and to the extent herein stated.

Liberty Mutual. SURETY

Liberty Mutual Insurance Company
The Ohio Casualty Insurance Company
West American Insurance Company

Certificate No: 8201616-987581

# POWER OF ATTORNEY

**KNOWN ALL PERSONS BY THESE PRESENTS:** That The Ohio Casualty Insurance Company is a corporation duly organized under the laws of the State of New Hampshire, that Liberty Mutual Insurance Company is a corporation duly organized under the laws of the State of Massachusetts, and West American Insurance Company is a corporation duly organized under the laws of the State of Indiana (herein collectively called the "Companies"), pursuant to and by authority herein set forth, does hereby name, constitute and appoint, Robert Barra

all of the city of Coral Springs state of FL each individually if there be more than one named, its true and lawful attorney-in-fact to make, execute, seal, acknowledge and deliver, for and on its behalf as surety and as its act and deed, any and all undertakings, bonds, recognizances and other surety obligations, in pursuance of these presents and shall be as binding upon the Companies as if they have been duly signed by the president and attested by the secretary of the Companies in their own proper persons.

**IN WITNESS WHEREOF,** this Power of Attorney has been subscribed by an authorized officer or official of the Companies and the corporate seals of the Companies have been affixed thereto this 24th day of July, 2019.

Liberty Mutual Insurance Company
The Ohio Casualty Insurance Company
West American Insurance Company

By: David M. Carey
David M. Carey, Assistant Secretary

State of PENNSYLVANIA
County of MONTGOMERY ss

On this 24th day of July, 2019 before me personally appeared David M. Carey, who acknowledged himself to be the Assistant Secretary of Liberty Mutual Insurance Company, The Ohio Casualty Company, and West American Insurance Company, and that he, as such, being authorized so to do, execute the foregoing instrument for the purposes therein contained by signing on behalf of the corporations by himself as a duly authorized officer.

**IN WITNESS WHEREOF,** I have hereunto subscribed my name and affixed my notarial seal at King of Prussia, Pennsylvania, on the day and year first above written.

**COMMONWEALTH OF PENNSYLVANIA**
Notarial Seal
Teresa Pastella, Notary Public
Upper Merion Twp., Montgomery County
My Commission Expires March 28, 2021
Member, Pennsylvania Association of Notaries

By: Teresa Pastella
Teresa Pastella, Notary Public

This Power of Attorney is made and executed pursuant to and by authority of the following By-laws and Authorizations of The Ohio Casualty Insurance Company, Liberty Mutual Insurance Company, and West American Insurance Company which resolutions are now in full force and effect reading as follows:

**ARTICLE IV – OFFICERS:** Section 12. Power of Attorney.
Any officer or other official of the Corporation authorized for that purpose in writing by the Chairman or the President, and subject to such limitation as the Chairman or the President may prescribe, shall appoint such attorneys-in-fact, as may be necessary to act in behalf of the Corporation to make, execute, seal, acknowledge and deliver as surety any and all undertakings, bonds, recognizances and other surety obligations. Such attorneys-in-fact, subject to the limitations set forth in their respective powers of attorney, shall have full power to bind the Corporation by their signature and execution of any such instruments and to attach thereto the seal of the Corporation. When so executed, such instruments shall be as binding as if signed by the President and attested to by the Secretary. Any power or authority granted to any representative or attorney-in-fact under the provisions of this article may be revoked at any time by the Board, the Chairman, the President or by the officer or officers granting such power or authority.

**ARTICLE XIII – Execution of Contracts:** Section 5. Surety Bonds and Undertakings.
Any officer of the Company authorized for that purpose in writing by the chairman or the president, and subject to such limitations as the chairman or the president may prescribe, shall appoint such attorneys-in-fact, as may be necessary to act in behalf of the Company to make, execute, seal, acknowledge and deliver as surety any and all undertakings, bonds, recognizances and other surety obligations. Such attorneys-in-fact subject to the limitations set forth in their respective powers of attorney, shall have full power to bind the Company by their signature and execution of any such instruments and to attach thereto the seal of the Company. When so executed such instruments shall be as binding as if signed by the president and attested by the secretary.

**Certificate of Designation** – The President of the Company, acting pursuant to the Bylaws of the Company, authorizes David M. Carey, Assistant Secretary to appoint such attorneys-in-fact as may be necessary to act on behalf of the Company to make, execute, seal, acknowledge and deliver as surety any and all undertakings, bonds, recognizances and other surety obligations.

**Authorization** – By unanimous consent of the Company's Board of Directors, the Company consents that facsimile or mechanically reproduced signature of any assistant secretary of the Company, wherever appearing upon a certified copy of any power of attorney issued by the Company in connection with surety bonds, shall be valid and binding upon the Company with the same force and effect as though manually affixed.

I, Renee C. Llewellyn, the undersigned, Assistant Secretary, The Ohio Casualty Insurance Company, Liberty Mutual Insurance Company, and West American Insurance Company do hereby certify that the original power of attorney of which the foregoing is a full, true and correct copy of the Power of Attorney executed by said Companies, is in full force and effect and has not been revoked.

**IN TESTIMONY WHEREOF,** I have hereunto set my hand and affixed the seals of said Companies this 13 day of January, 2021.

By: Renee C. Llewellyn
Renee C. Llewellyn, Assistant Secretary

Not valid for mortgage, note, loan, letter of credit, currency rate, interest rate or residual value guarantees.

To confirm the validity of this Power of Attorney call 1-610-832-8240 between 9:00 am and 4:30 pm EST on any business day.

## Bid Bond (continued)

1. Bidder and Surety, jointly and severally, bind themselves, their heirs, executors, administrators, successors, and assigns to pay to Owner upon default of Bidder the penal sum set forth on the face of this Bond. Payment of the penal sum is the extent of Bidder's and Surety's liability. Recovery of such penal sum under the terms of this Bond will be Owner's sole and exclusive remedy upon default of Bidder.
2. Default of Bidder occurs upon the failure of Bidder to deliver within the time required by the Bidding Documents (or any extension thereof agreed to in writing by Owner) the executed Agreement required by the Bidding Documents and any performance and payment bonds, Power of Attorney(s), and Certificate(s) of Insurance required by the Bidding Documents.
3. This obligation will be null and void if:
   3.1. Owner accepts Bidder's Bid and Bidder delivers within the time required by the Bidding Documents (or any extension thereof agreed to in writing by Owner) the executed Agreement required by the Bidding Documents and any performance and payment bonds, Power of Attorney(s), and Certificate(s) of Insurance required by the Bidding Documents, or
   3.2. All Bids are rejected by Owner, or
   3.3. Owner fails to issue a Notice of Award to Bidder within the time specified in the Bidding Documents (or any extension thereof agreed to in writing by Bidder and, if applicable, consented to by Surety when required by Paragraph 5 hereof).
4. Payment under this Bond will be due and payable upon default of Bidder and within 30 calendar days after receipt by Bidder and Surety of written notice of default from Owner, which notice will be given with reasonable promptness, identifying this Bond and the Project and including a statement of the amount due.
5. Surety waives notice of any and all defenses based on or arising out of any time extension to issue Notice of Award agreed to in writing by Owner and Bidder, provided that the total time for issuing Notice of Award including extensions does not in the aggregate exceed 120 days from the Bid due date without Surety's written consent.
6. No suit or action will be commenced under this Bond prior to 30 calendar days after the notice of default required in Paragraph 4 above is received by Bidder and Surety, and in no case later than one year after the Bid due date.
7. Any suit or action under this Bond will be commenced only in a court of competent jurisdiction located in the state in which the Project is located.
8. Notices required hereunder must be in writing and sent to Bidder and Surety at their respective addresses shown on the face of this Bond. Such notices may be sent by personal delivery, commercial courier, or by United States Postal Service registered or certified mail, return receipt requested, postage pre-paid, and will be deemed to be effective upon receipt by the party concerned.
9. Surety shall cause to be attached to this Bond a current and effective Power of Attorney evidencing the authority of the officer, agent, or representative who executed this Bond on behalf of Surety to execute, seal, and deliver such Bond and bind the Surety thereby.
10. This Bond is intended to conform to all applicable statutory requirements. Any applicable requirement of any applicable statute that has been omitted from this Bond will be deemed to be included herein as if set forth at length. If any provision of this Bond conflicts with any applicable statute, then the provision of said statute governs and the remainder of this Bond that is not in conflict therewith continues in full force and effect.
11. The term "Bid" as used herein includes a Bid, offer, or proposal as applicable.

HOWARD LEASING
Professional Employee Services

6302 Manatee Avenue West
Bradenton, FL 34209
941-761-7704

January 6, 2021

Centerline Drilling, Inc.
1696 Old Okeechobee Road
West Palm Beach, FL 33409

Re: Experience Modification Rating

To Whom It May Concern:

I am writing this letter in response to your organization's request for Workers' Compensation Experience Modification Rating (EMR). Howard Leasing Inc., had an EMR of .98 in 2018, an EMR of .98 in 2019 and an EMR of .98 in 2020. Through the co-employment relationship between Howard Leasing Inc., and Centerline Drilling, Inc., the EMR rating is as follows:

| Rating Effective Date | EMR |
|---|---|
| January 1, 2021 | .98 |

Sincerely,

Sondra Kelley
Director of Risk Management

Cc: File

# CERTIFICATE OF LIABILITY INSURANCE

DATE (MM/DD/YYYY): 3/23/2020

THIS CERTIFICATE IS ISSUED AS A MATTER OF INFORMATION ONLY AND CONFERS NO RIGHTS UPON THE CERTIFICATE HOLDER. THIS CERTIFICATE DOES NOT AFFIRMATIVELY OR NEGATIVELY AMEND, EXTEND OR ALTER THE COVERAGE AFFORDED BY THE POLICIES BELOW. THIS CERTIFICATE OF INSURANCE DOES NOT CONSTITUTE A CONTRACT BETWEEN THE ISSUING INSURER(S), AUTHORIZED REPRESENTATIVE OR PRODUCER, AND THE CERTIFICATE HOLDER.

IMPORTANT: If the certificate holder is an ADDITIONAL INSURED, the policy(ies) must have ADDITIONAL INSURED provisions or be endorsed. If SUBROGATION IS WAIVED, subject to the terms and conditions of the policy, certain policies may require an endorsement. A statement on this certificate does not confer rights to the certificate holder in lieu of such endorsement(s).

| | |
|---|---|
| PRODUCER<br>Blackadar Insurance Agency, Inc.<br>1436 N Ronald Reagan Blvd<br>Longwood FL 32750 | CONTACT NAME: Ella Nulph<br>PHONE (A/C, No, Ext): 407-831-3832 FAX (A/C, No): 407-830-4681<br>E-MAIL ADDRESS: ella@blackadar.com |

| INSURER(S) AFFORDING COVERAGE | NAIC # |
|---|---|
| INSURER A: Depositors Insurance Company | 42587 |
| INSURER B: | |
| INSURER C: | |
| INSURER D: | |
| INSURER E: | |
| INSURER F: | |

INSURED CENTDRI-01
Centerline Drilling, Inc
1696 Old Okeechobee Rd
Suite 3C
West Palm Beach FL 33409

**COVERAGES** **CERTIFICATE NUMBER:** 431731708 **REVISION NUMBER:**

THIS IS TO CERTIFY THAT THE POLICIES OF INSURANCE LISTED BELOW HAVE BEEN ISSUED TO THE INSURED NAMED ABOVE FOR THE POLICY PERIOD INDICATED. NOTWITHSTANDING ANY REQUIREMENT, TERM OR CONDITION OF ANY CONTRACT OR OTHER DOCUMENT WITH RESPECT TO WHICH THIS CERTIFICATE MAY BE ISSUED OR MAY PERTAIN, THE INSURANCE AFFORDED BY THE POLICIES DESCRIBED HEREIN IS SUBJECT TO ALL THE TERMS, EXCLUSIONS AND CONDITIONS OF SUCH POLICIES. LIMITS SHOWN MAY HAVE BEEN REDUCED BY PAID CLAIMS.

| INSR LTR | TYPE OF INSURANCE | ADDL INSD | SUBR WVD | POLICY NUMBER | POLICY EFF (MM/DD/YYYY) | POLICY EXP (MM/DD/YYYY) | LIMITS | |
|---|---|---|---|---|---|---|---|---|
| A | X COMMERCIAL GENERAL LIABILITY | | | ACP3028715557 | 3/26/2020 | 3/26/2021 | EACH OCCURRENCE | $ 1,000,000 |
| | CLAIMS-MADE [X] OCCUR | | | | | | DAMAGE TO RENTED PREMISES (Ea occurrence) | $ 100,000 |
| | | | | | | | MED EXP (Any one person) | $ 5,000 |
| | | | | | | | PERSONAL & ADV INJURY | $ 1,000,000 |
| | GEN'L AGGREGATE LIMIT APPLIES PER: | | | | | | GENERAL AGGREGATE | $ 2,000,000 |
| | POLICY [X] PRO-JECT [X] LOC | | | | | | PRODUCTS - COMP/OP AGG | $ 2,000,000 |
| | OTHER: | | | | | | | $ |
| A | AUTOMOBILE LIABILITY | | | ACP3028715557 | 3/26/2020 | 3/26/2021 | COMBINED SINGLE LIMIT (Ea accident) | $ 1,000,000 |
| | X ANY AUTO | | | | | | BODILY INJURY (Per person) | $ |
| | OWNED AUTOS ONLY / SCHEDULED AUTOS | | | | | | BODILY INJURY (Per accident) | $ |
| | X HIRED AUTOS ONLY / X NON-OWNED AUTOS ONLY | | | | | | PROPERTY DAMAGE (Per accident) | $ |
| | | | | | | | PIP | $ 10,000 |
| | UMBRELLA LIAB / OCCUR | | | | | | EACH OCCURRENCE | $ |
| | EXCESS LIAB / CLAIMS-MADE | | | | | | AGGREGATE | $ |
| | DED / RETENTION $ | | | | | | | $ |
| | WORKERS COMPENSATION AND EMPLOYERS' LIABILITY Y/N | | | | | | PER STATUTE / OTH-ER | |
| | ANY PROPRIETOR/PARTNER/EXECUTIVE OFFICER/MEMBER EXCLUDED? (Mandatory in NH) N/A | | | | | | E.L. EACH ACCIDENT | $ |
| | If yes, describe under DESCRIPTION OF OPERATIONS below | | | | | | E.L. DISEASE - EA EMPLOYEE | $ |
| | | | | | | | E.L. DISEASE - POLICY LIMIT | $ |

DESCRIPTION OF OPERATIONS / LOCATIONS / VEHICLES (ACORD 101, Additional Remarks Schedule, may be attached if more space is required)
Certificate Holder is included as Additional Insured and Blanket Waiver of Subrogation applies; with regard to General Liability and Business Auto when required by written contract.
The Town of Jupiter, Florida is Additional Insured with regard to General Liability and Business Auto when required by written contract.
30 Day Notice of Cancellation

**CERTIFICATE HOLDER**

Town of Jupiter
Attn: Amanda Z. Barnes, P.E.
210 Military Trail
Jupiter FL 33458

**CANCELLATION**

SHOULD ANY OF THE ABOVE DESCRIBED POLICIES BE CANCELLED BEFORE THE EXPIRATION DATE THEREOF, NOTICE WILL BE DELIVERED IN ACCORDANCE WITH THE POLICY PROVISIONS.

AUTHORIZED REPRESENTATIVE
By L.B.

© 1988-2015 ACORD CORPORATION. All rights reserved.



The ACORD name and logo are registered marks of ACORD

# CERTIFICATE OF LIABILITY INSURANCE

DATE (MM/DD/YYYY): 4/28/2020

THIS CERTIFICATE IS ISSUED AS A MATTER OF INFORMATION ONLY AND CONFERS NO RIGHTS UPON THE CERTIFICATE HOLDER. THIS CERTIFICATE DOES NOT AFFIRMATIVELY OR NEGATIVELY AMEND, EXTEND OR ALTER THE COVERAGE AFFORDED BY THE POLICIES BELOW. THIS CERTIFICATE OF INSURANCE DOES NOT CONSTITUTE A CONTRACT BETWEEN THE ISSUING INSURER(S), AUTHORIZED REPRESENTATIVE OR PRODUCER, AND THE CERTIFICATE HOLDER.

IMPORTANT: If the certificate holder is an ADDITIONAL INSURED, the policy(ies) must have ADDITIONAL INSURED provisions or be endorsed. If SUBROGATION IS WAIVED, subject to the terms and conditions of the policy, certain policies may require an endorsement. A statement on this certificate does not confer rights to the certificate holder in lieu of such endorsement(s).

| | | | |
|---|---|---|---|
| PRODUCER | SUNZ Insurance Solutions, LLC. ID: (Howard)<br>c/o Howard Leasing, Inc.<br>6302 Manatee Ave. W<br>Bradenton, FL 34209 | CONTACT NAME: | Sondra Kelly |
| | | PHONE (A/C, No, Ext): | 941-761-7704 FAX (A/C, No): 941-761-7706 |
| | | E-MAIL ADDRESS: | skelley@howardleasinginc.com |
| | | INSURER(S) AFFORDING COVERAGE | NAIC # |
| | | INSURER A: SUNZ Insurance Company | 34762 |
| INSURED | Howard Leasing, Inc<br>Howard Leasing II, LLC. Howard Leasing III, Inc.;<br>Howard Leasing IV, Inc. Howard Leasing V, Inc.<br>6302 Manatee Avenue West, Suite K<br>Bradenton FL 34209 | INSURER B: | |
| | | INSURER C: | |
| | | INSURER D: | |
| | | INSURER E: | |
| | | INSURER F: | |

**COVERAGES** **CERTIFICATE NUMBER:** 55242739 **REVISION NUMBER:**

THIS IS TO CERTIFY THAT THE POLICIES OF INSURANCE LISTED BELOW HAVE BEEN ISSUED TO THE INSURED NAMED ABOVE FOR THE POLICY PERIOD INDICATED. NOTWITHSTANDING ANY REQUIREMENT, TERM OR CONDITION OF ANY CONTRACT OR OTHER DOCUMENT WITH RESPECT TO WHICH THIS CERTIFICATE MAY BE ISSUED OR MAY PERTAIN, THE INSURANCE AFFORDED BY THE POLICIES DESCRIBED HEREIN IS SUBJECT TO ALL THE TERMS, EXCLUSIONS AND CONDITIONS OF SUCH POLICIES. LIMITS SHOWN MAY HAVE BEEN REDUCED BY PAID CLAIMS.

| INSR LTR | TYPE OF INSURANCE | ADDL INSD | SUBR WVD | POLICY NUMBER | POLICY EFF (MM/DD/YYYY) | POLICY EXP (MM/DD/YYYY) | LIMITS | |
|---|---|---|---|---|---|---|---|---|
| | COMMERCIAL GENERAL LIABILITY | | | | | | EACH OCCURRENCE | $ |
| | ☐ CLAIMS-MADE ☐ OCCUR | | | | | | DAMAGE TO RENTED PREMISES (Ea occurrence) | $ |
| | | | | | | | MED EXP (Any one person) | $ |
| | | | | | | | PERSONAL & ADV INJURY | $ |
| | GEN'L AGGREGATE LIMIT APPLIES PER: | | | | | | GENERAL AGGREGATE | $ |
| | ☐ POLICY ☐ PRO-JECT ☐ LOC | | | | | | PRODUCTS - COMP/OP AGG | $ |
| | OTHER: | | | | | | | $ |
| | AUTOMOBILE LIABILITY | | | | | | COMBINED SINGLE LIMIT (Ea accident) | $ |
| | ANY AUTO | | | | | | BODILY INJURY (Per person) | $ |
| | OWNED AUTOS ONLY ☐ SCHEDULED AUTOS | | | | | | BODILY INJURY (Per accident) | $ |
| | HIRED AUTOS ONLY ☐ NON-OWNED AUTOS ONLY | | | | | | PROPERTY DAMAGE (Per accident) | $ |
| | | | | | | | | $ |
| | UMBRELLA LIAB ☐ OCCUR | | | | | | EACH OCCURRENCE | $ |
| | EXCESS LIAB ☐ CLAIMS-MADE | | | | | | AGGREGATE | $ |
| | DED ☐ RETENTION $ | | | | | | | $ |
| A | WORKERS COMPENSATION AND EMPLOYERS' LIABILITY Y/N | N/A | | WC013-00001-020<br>WC013-00001-019 | 5/1/2020<br>5/1/2019 | 5/1/2021<br>5/1/2020 | ✓ PER STATUTE ☐ OTH-ER | |
| | ANYPROPRIETOR/PARTNER/EXECUTIVE OFFICER/MEMBEREXCLUDED? [N] (Mandatory in NH) | | | | | | E.L. EACH ACCIDENT | $1,000,000 |
| | If yes, describe under DESCRIPTION OF OPERATIONS below | | | | | | E.L. DISEASE - EA EMPLOYEE | $1,000,000 |
| | | | | | | | E.L. DISEASE - POLICY LIMIT | $1,000,000 |

DESCRIPTION OF OPERATIONS / LOCATIONS / VEHICLES (ACORD 101, Additional Remarks Schedule, may be attached if more space is required)

Coverage provided for all leased employees but not subcontractors of: Centerline Drilling, Inc
Location Effective: 12/4/2012
Email to: ctrlinedrilling@aol.com

**CERTIFICATE HOLDER**

1237

Town of Jupiter
Attn: Amanda Z. Barnes, P.E.
210 Military Trail
Jupiter, FL 33458

**CANCELLATION**

SHOULD ANY OF THE ABOVE DESCRIBED POLICIES BE CANCELLED BEFORE THE EXPIRATION DATE THEREOF, NOTICE WILL BE DELIVERED IN ACCORDANCE WITH THE POLICY PROVISIONS.

AUTHORIZED REPRESENTATIVE

Rick Leonard

© 1988-2015 ACORD CORPORATION. All rights reserved.

Westchester
A Chubb Company

**Westchester Environmental**

## Quote – Option 1
Q2423991Q2021

**Date:** **January 7, 2021**

**Producer:**
RT SPECIALTY LLC
380 PARK PLACE BOULEVARD SUITE 175
CLEARWATER, FL 33759

**Attention:** Paula Ross

**Email:** paular@atlanticspecial.com

**Potential Insured:**
Centerline Drilling, Inc.

1696 Old Okeechobee Road, Suite 3C

West Palm Beach, FL 33409

Please read this proposal carefully, as the limits, coverage and other terms and conditions may vary significantly from those requested in your submission and/or from the expiring policy. Terms and conditions that are not specifically mentioned in this proposal are not included. The terms and conditions of this proposal supersede the submitted insurance specifications and all prior proposals and binders. Actual coverage will be provided by and in accordance with the policy as issued.

The insurer is not bound by any statements made in the submission purporting to bind the insurer unless such statement is reflected in the policy or in an agreement signed by someone authorized to bind the insurer.

This proposal has been constructed in reliance on the data provided in the submission. A material change or misrepresentation of that data voids this proposal.

**Company:** **Westchester Surplus Lines Insurance Company - AM Best Rating A++ XV**

**Coverage:** Contractors Pollution Liability Coverage Form - Occurrence

| Limits of Liability: | | Deductible: | Deductible Basis: | Retroactive Date: |
|---|---|---|---|---|
| Contractors Pollution Liability – **Each Pollution Condition** | $1,000,000 | $2,500 | Each Pollution Condition | Not Applicable |
| **General Aggregate:** | $2,000,000 | *(The most the insurer will pay for the sum of damages under all Coverage Parts)* | | |
| **Policy Period:** 1/7/2021 - 1/7/2022 | | **Exposure: $1,100,000** | | |
| **Premium:** | **$1,480** | Rate: Flat / Non Auditable | | |
| TRIA Premium Charge: | $250 | | | |
| **Total Premium:** | **$1,730** | *(Includes TRIA Premium Charge - Any request to reject TRIA coverage must be submitted to the underwriter prior to binding. See Attached TRIA disclosure.).* | | |

Premium: 1,480. plus 75. policy fee, 77.75 taxes = 1,632.75

**Covered Locations:** Not Applicable

TRIA A/P is: 250. plus 12.50 taxes

**Insurance Company Forms:**

| | |
|---|---|
| ENV-1200 (03/10) | Contractors Pollution Liability Insurance Policy - Occurrence - Elite |
| ENV-1230 (03/10) | Non-Owned Disposal Site(s) Liability - Elite |
| ENV-3103 (12/10) | All Known or Reported Incidents Exclusion |
| ENV-3130 (11/13) | Prior Operations Exclusion |
| ENV-3137 (08/04) | Separate Defense Limit Endorsement - Contractors Pollution Liability Coverage |
| ENV-3143 (03/05) | Waiver of Transfer of Rights of Recovery Against Others to Us |
| ENV-3146 (01/14) | Transportation Pollution Liability Coverage Endorsement |
| ENV-3147 (10/12) | Global Program Solutions Amendatory (Foreign Indemnity) Endorsement |
| ENV-3213 (04/20) | Mold Sublimit Endorsement - Contractors Pollution Liability |
| ENV-3239 (11/16) | Policy Changes Endorsement |
| ENV-3244 (04/18) | Catastrophe Management Coverage Endorsement |
| ENV-3250 (12/18) | Additional Insured Endorsement - Ongoing Work Or Operations |
| ENV-3251 (12/18) | Additional Insured Endorsement - Products-Completed Operations Hazard |
| ENV-3253 (12/18) | Primary And Noncontributory - Other Insurance Condition |
| ENV-5100 (06/11) | Asbestos Amendatory Endorsement |
| ENV-5102 (10/04) | Nuclear Hazard Liability Exclusion |
| ENV-5519 (09/04) | Earned Premium Endorsement - 25% Minimum Earned |
| ALL-21101 (11/06) | Trade or Economic Sanctions Endorsement |
| SL-44730a (01/16) | Service of Suit Endorsement - Florida |
| TR-51520a (08/20) | Policyholder Disclosure - Notice of Terrorism Insurance Coverage |

**The quoted coverage is subject to the receipt and satisfactory review of the following information within thirty (30) days unless otherwise noted:**

1. Three years of currently valued loss runs - prior to binding

**Additional Terms and Conditions:**

1. Proposed terms and conditions may differ from those requested.
2. Sample coverage forms will be provided to you prior to binding.
3. The producer shall be responsible for all applicable surplus lines filings and taxes.
4. Premium is due thirty (30) days from the effective date of coverage.
5. The proposed coverage shall be 25% minimum earned at inception.
6. The coverage proposed in this quote is valid through 03/07/2021.
7. We reserve the right to rescind this quote in order to amend the terms and conditions, including premium, or decline the account based upon review of additional underwriting information.
8. **PLEASE NOTE THAT FOR POLICIES EFFECTIVE JULY 21, 2011 AND SUBSEQUENT, WE REQUIRE THE PRODUCER TO PROVIDE THE "HOME STATE" AS DEFINED IN THE NONADMITTED AND REINSURANCE REFORM ACT (NRRA) UPON BINDING OF THIS PLACEMENT**
9. Please be advised that we do not review Certificates of Insurance issued by you, or by any party, relating to this policy of insurance either for content or accuracy. Accordingly, we request that you do not provide copies of certificates to us for review or for our records. Authority is granted to you for the limited purpose of issuing **unmodified ACORD Certificates (ACORD 25).** It is your responsibility to see that any Certificate provides an accurate representation of the coverage form and endorsements applicable to this policy at the time the Certificate is issued. **Any modification of the approved ACORD forms specifically set forth above, or the issuance of a non-approved Certificate of Insurance (ACORD or other) is prohibited.** Certificates of Insurance may only be issued as a matter of information. You have no authority by virtue of a Certificate or otherwise, to amend, extend or otherwise alter coverage afforded under this policy. Certificates of Insurance are never recognized as endorsements or policy change requests. You must submit a separate written request if an endorsement or policy change (including but not limited to adding additional insureds or loss payees and/or alteration of notice requirements for cancellation) is requested. In the event a policy change is requested, the underwriter will advise if the request is acceptable to the Company.

Should you have any questions, please feel free to contact me at 678-795-4541 or carla.valero@westchester.com

Sincerely,

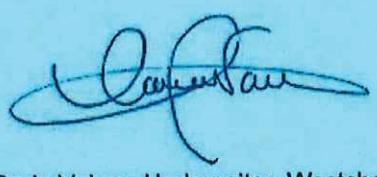

Carla Valero, Underwriter, Westchester Environmental
For Stela Flanagan, Vice President, Westchester Environmental

STATE OF FLORIDA
WATER WELL CONTRACTOR LICENSE
Issued to
JOHN SAY JR.

License No. 11132 Expires 7/31/2021

Victoria Topper

DISTRICT CERTIFICATION OFFICER

ANNE M. GANNON
CONSTITUTIONAL TAX COLLECTOR
*Serving Palm Beach County*
Serving *you.*

P.O. Box 3353, West Palm Beach, FL 33402-3353
www.pbctax.com Tel: (561) 355-2264

****LOCATED AT****
1696 OLD OKEECHOBEE RD STE 3C
WEST PLAM BEACH, FL 33409

| TYPE OF BUSINESS | OWNER | CERTIFICATION # | RECEIPT #/DATE PAID | AMT PAID | BILL # |
|---|---|---|---|---|---|
| 23-0099 WATER WELL CONTRACTOR | SAY JOHN A JR | PERMIT5011758W | B20.575337 - 09/10/20 | $27.50 | B40108185 |

This document is valid only when receipted by the Tax Collector's Office.

**STATE OF FLORIDA**
**PALM BEACH COUNTY**
**2020/2021 LOCAL BUSINESS TAX RECEIPT**

**LBTR Number: 200307585**
**EXPIRES: SEPTEMBER 30, 2021**

This receipt grants the privilege of engaging in or managing any business profession or occupation within its jurisdiction and MUST be conspicuously displayed at the place of business and in such a manner as to be open to the view of the public.

CENTERLINE DRILLING INC
CENTERLINE DRILLING INC
1696 OKEECHOBEE RD STE 3C
WEST PALM BEACH FL 33409-5219

7 6 - 2323

**CITY OF WEST PALM BEACH**
DEPARTMENT OF DEVELOPMENT SERVICES

WEST PALM BEACH

Attached is your 2020-2021 Business Receipt evidencing payment of fees for your Local Business Tax; Certificate of Use (if applicable); Sidewalk Café Permit (if applicable); and/or Extended Hours Alcohol Permit (if applicable).

Business Tax Receipt: This document, based on the business category codes listed below, is your Business Tax Receipt. THIS BUSINESS TAX RECEIPT MUST BE DISPLAYED ON THE PREMISES IN A PLACE WHERE IT MAY BE SEEN AT ALL TIMES (Sec. 82-160 City Code).

Certificate of Use: A certificate of use may be suspended or revoked in accordance with Sec. 22-39 of the City Code.

Sidewalk Café Permit: A sidewalk café permit requires compliance with the conditions in Secs. 78-345 and 78-347 of the City Code. A sidewalk café permit may be suspended or revoked pursuant to Sec. 78-348 of the City Code.

Extended Hours Alcohol Permit: An extended hours alcohol permit requires compliance with the conditions in Sec. 6-8 of the City Code and may be suspended or revoked as provided in said section.

FOR INFORMATION CALL (561) 805-6700 EMAIL businesstax@wpb.org HOURS 8:00 AM - 5:00 PM — MONDAY - FRIDAY

INSTRUCTIONS: PLEASE POST IN A CONSPICUOUS PLACE AT YOUR PLACE OF BUSINESS.

WEST PALM BEACH

# CITY OF WEST PALM BEACH

2020 to 2021 BUSINESS RECEIPT

NOT TRANSFERABLE

CITY OF WEST PALM BEACH
P.O. BOX 3147, WEST PALM BEACH, FL 33402

0000008393
CENTERLINE DRILLING INC
1696 OKEECHOBEE RD # 3C

WATERWELL DRILLING

| BUS. TAX ID. | CATEGORY | DESCRIPTION | FEE |
|---|---|---|---|
| 28981 | 237110 | WATER & SEWER LINE & RELATED STRUCTURES | 86.81 |

EXPIRES SEPTEMBER 30, 2021

TOTAL→ 86.81

** PAID 86.81 ** BAL ** 0.00

THIS DOCUMENT NOT VALID UNTIL FUNDS ARE COLLECTED

# Electronic Articles of Incorporation For

P02000101880
FILED
September 20, 2002
Sec. Of State

CENTERLINE DRILLING, INC

The undersigned incorporator, for the purpose of forming a Florida profit corporation, hereby adopts the following Articles of Incorporation:

## Article I

The name of the corporation is:

CENTERLINE DRILLING, INC

## Article II

The principal place of business address:

1696 OLD OKEECHOBEE ROAD
3C
WEST PALM BEACH, FL. 33409

The mailing address of the corporation is:

1696 OLD OKEECHOBEE ROAD
3C
WEST PALM BEACH, FL. 33409

## Article III

The purpose for which this corporation is organized is:

ANY AND ALL LAWFUL BUSINESS.

## Article IV

The number of shares the corporation is authorized to issue is:

1000

## Article V

The name and Florida street address of the registered agent is:

JOHN SAY JR
3423 WRY ROAD
LAKE WORTH, FL. 33467

I certify that I am familiar with and accept the responsibilities of registered agent.

P02000101880
FILED
September 20, 2002
Sec. Of State

Registered Agent Signature: JOHN SAY, JR

## Article VI

The name and address of the incorporator is:

JOHN SAY, JR
3423 WRY ROAD

LAKE WORTH, FL 33467

Incorporator Signature: JOHN SAY, JR

## Article VII

The initial officer(s) and/or director(s) of the corporation is/are:

Title: P
JOHN SAY JR
3423 WRY ROAD
LAKE WORTH, FL. 33467

# Palm Beach County
# Office of Equal Business Opportunity

Certifies That

## Centerline Drilling Inc.

Vendor # **VC0000013281**

*is a Small Business Enterprise (SBE) as prescribed by section 2-80.21 - 2.80.30 of the Palm Beach County Code for a three year period from*

***November 17, 2020 to November 16, 2023***

The following services and/or products are covered under this certification:

**Well Services (Including Oil, Gas, and Water): Drilling, Plugging, Consulting, Maintenance, Repair, etc.**

Allen Gray, Manager
11/17/2020

PALM BEACH COUNTY • FLORIDA

**Palm Beach County Board of County Commissioners**

Dave Kerner, Mayor
Robert S. Weinroth, Vice Mayor
Gregg K. Weiss
Mary Lou Berger
Melissa McKinlay
Mack Bernard

**County Administrator**
Verdenia C. Baker

# SOUTH FLORIDA WATER MANAGEMENT DISTRICT

**REGISTERED VENDOR NO.: 115242**

May 30, 2019

Mr. John Say, Jr., President
Centerline Drilling, Inc.
1696 Old Okeechobee Rd #3C
West Palm Beach, FL 33409

**CERTIFICATION EXPIRATION DATE**
**May 30, 2022**

Dear Mr. Say:

Congratulations, the South Florida Water Management District (District) has recertified your firm as a Small Business Enterprise (SBE). This certification is valid for three (3) years and may **only** be applied when business is conducted in the following area(s):

**Well Water Contracting Services**

***Your submittal of bids or proposals to supply other products or services outside of the specialty area(s) noted above will not count toward SBE participation. If you require certification in other specialty areas, please contact the Procurement Bureau, SBE Section, for additional information.***

Renewal is required every three (3) years and should be requested a minimum of 45 days prior to the above expiration date.

If any changes occur within your company during the certification period such as ownership, affiliate company status, address, telephone number, licensing status, gross revenue, or any information that relates to your SBE Certification status, you must notify this office in writing immediately. It is imperative that we maintain current information on your company at all times. *FAILURE TO REPORT CHANGES MAY RESULT IN DECERTIFICATION.*

Certification is not a guarantee that your firm will receive work, nor an assurance that your firm will remain in the District's vendor database.

We look forward to a mutually beneficial working relationship.

Sincerely,

Joni Lynn Fox
Sr. Contract Compliance Specialist
Procurement Bureau

JLF/kk

# CENTERLINE DRILLING INC. VEHICLE / EQUIPMENT LIST

| Year | Make |
|---|---|
| 1986 | AM General with B57 Rig |
| 1989 | Ford F800 - 1000 Gallons Water Tank |
| 1990 | F800 - Ford National Crane #1 |
| 2002 | International - Drillmaster 400 |
| 2005 | Anderson Trailer |
| 2007 | Ford Terex Crane #2 |
| 2007 | Ford National Crane #3 |
| 2008 | Enclosed Trailer |
| 2008 | Sullair 900 Compressor |
| 2009 | Ford F350 - Support / Pipe Rack |
| 2010 | Atlas Copco 750 Compressor |
| 2012 | Magnum MMG100 Generac Generator |
| 2012 | Dodge - 3500 with Smeal Pump Hoist |
| 2015 | Mud Puppy 25-2SC |
| 2015 | Dodge -4500 2dr- with CME 45 Rig |
| 2017 | Dodge 2500 - 4dr Support Truck |
| 2018 | Dodge -4500 4 Door - flatbed support truck |
| 2019 | Big Tex Trailer |
| 2020 | Dodge - 5500 - 4 Door flatbed support truck |
| Fuji Electric Portaflow-C FSC-4 Ultrasonic Flow Meter | |
| Laval Camera - RCAM 1000XLT | |
| Well VU Camera 1000 | |

# *CENTERLINE DRILLING, INC.*

# *HEALTH, SAFETY, & HAZARD WRITTEN PROGRAM*

# SAFETY COMMITEE

***Safety Committee Organization***

A safety committee has been established to recommend improvements to our workplace safety program and to identify corrective measures needed to eliminate to control recognized safety and health hazards. The safety committee consists of the following supervisory and non-supervisory members of our organization:

| | |
|---|---|
| John Say Jr. | Safety Program Coordinator |
| Dean Federer | Supervisory Employee Member |

***Responsibilities***

The safety committee shall determine the schedule for evaluating the effectiveness of control measures use to protect employees from safety and health hazards in the workplace.

The safety committee will be responsible for assisting management in reviewing and updating safety rules based on accident investigation findings, any inspection findings, and employee reports of unsafe conditions or work practices; and accepting and addressing anonymous complaints and suggestions from employees.

The safety committee will be responsible for assisting management in updating the workplace safety program by evaluating employee injury and accident records, identifying trends and patterns and formulating corrective measures to prevent recurrence.

The safety committee will be responsible for assisting management in evaluating employee accident and illness prevention programs and promoting safety and health awareness and co-worker participation through continuous improvements to the workplace safety program.

Safety committee members will participate in safety training and be responsible for assisting management in monitoring workplace safety education and training to ensure that it is in place, that it is effective and that it is documented.

***Meetings***

Safety committee meetings program are held quarterly. The safety program, coordination will make a copy of the minutes available upon request.

# TABLE OF CONTENTS


- Safety Committee
- Safety Committee Minutes (blank copy of)
- Safety and Health Training
- First Aid Procedures
- First Aid Instructions
- Safety Awareness Policy - Employee Acknowledgment Employee Warning Record
- Accident Investigation
- Accident Investigation Report (blank copy of)
- Instructions for completing the Accident Investigation Report
- Recordkeeping Procedures
- Table of Contents for Safety Rules, Polices and Procedures
- Hazard Communication
- Hazard / Control Analysis

# MANAGEMENT COMMITMENT AND INVOLVEMENT

***Policy Statement***

The management of this organization is committed to providing employees with a safe and healthful workplace. It is the policy of this organization that employees report unsafe conditions and do not perform work tasks if the work is considered unsafe. Employees must report all accidents, injuries and unsafe conditions to their supervisors. No such report will result in retaliation, penalty or other disincentive.

Employee recommendations to improve safety and health conditions will be given thorough consideration by our Management team. Management will give top priority to and provide the financial resources for the correction of unsafe conditions. Similarly, management will take disciplinary action against an employee who willfully or repeatedly violates workplace safely rules. This action may include verbal or written reprimands and may ultimately result in termination of employment.

The primary responsibility for the coordination, implementation and maintenance of our workplace safety program has been assigned to:

Name: John Say Jr.
Number: (561) 436-6388

Senior management will be actively involved with employees in establishing and maintaining an effective safely program. Our safety program coordinator, myself, or other members of our management team will participate with you or your department's employee representative in ongoing safety and health programs activities, which include:

Promoting safely committee participation.
Providing safety and health education and training.
Reviewing and updating workplace safety rules.

This policy statement serves to express management's commitment to an involvement in providing our employees a safe and healthful workplace. This workplace safety program will be incorporated as the standard of practice for this organization. Compliance with the safety rules will be required of all employees as a condition of employment.

John Say, Jr.
John Say Jr
President

# Centerline Drilling, Inc.
# Safety Committee Minutes

Date of Committee Meeting _____ Time _____

Minutes Prepared by _____ Location _____

Members in Attendance

Name Name Name

_____

_____

_____

Previous Action Items _____

_____

_____

Review of Accidents Since Previous Meeting _____

_____

_____

Recommendations for Prevention _____

_____

_____

Recommendations from Anonymous Employees _____

_____

_____

Suggestions from Employees _____

_____

_____

Recommended Updates to Safety Program None

Recommendations from Accident Investigation Reports None

Safety Training Recommendations None

Comments

# SAFETY AND HEALTH TRAINING

***Safety and Health Orientation***

Workplace safety and health orientation begins on the first day of initial employment or job transfer. Each employee has access to a copy of this safety manual, through his or her supervisor, for review and future reference and will be given a personal copy of the safety rules, polices and job-specific procedures described in our workplace safety program manual. All employees will be instructed by their supervisors that compliance with the safety rules described in the work place safety manual is required.

***Job-Specific training***

Supervisors will initially train employees on how to perform assigned job tasks safely.

Supervisors will carefully review with each employee the specific safety rules, policies and procedures that are applicable and that are described in the workplace safety manual.

Supervisors will give employees verbal instructions and specific directions on how to do the work safely.

Supervisors will observe employees performing the work. If necessary, the supervisor will provide a demonstration using safe work practices, or remedial instruction to correct training deficiencies before an employee is permitted to do the work without supervision.

All employees will receive safe operating instructions on seldom-used or new equipment before using the equipment.

Supervisors will review safe work practices with employees before permitting the performance of new, non-routine or specialized procedures.

***Periodic Retraining of Employees***

All employees will be retrained periodically on safety rules, policies and procedures and when changes are made to the workplace safety manual.

Individual employees will be retrained after the occurrence of a work-related injury caused by an unsafe act or work practice and when a supervisor observes employees displaying unsafe acts, practices or behaviors.

# FIRST-AID PROCEDURES

EMERGENCY PHONE NUMBERS

| | |
|---|---|
| Safety Coordinator | 1-561-436-6388 |
| Main Office | 1-561-615-0988 |
| Ambulance, Fire and Police Department | 911 |
| Chemical Emergency Preparedness Hotline | 1-800-535-0202 |
| Chemical Transportation Emergency Center | 1-800-424-9300 |
| Chemical Referral Center | 1-800-262-8200 |
| Drug Enforcement Administration | 1-800-829-3676 |
| Hazardous Waste Hotline - Office of Solid Waste and Emergency Response | 1-800-424-9346 |
| Small Business Hotline | 1-800-368-5888 |
| National Response Center | 1-800-424-8802 |
| National Institute of Occup. Safety and Health | 1-800-356-4800 |
| National Safety Council | 1-312-527-4800 |
| Safe Drinking Water Hotline | 1-800-426-4791 |
| Substance Identification | 1-800-848-6538 |
| Us Department of Transportation | 1-202-366-4488 |
| Occupational Health and Safety Administration | 1-202-523-7075 |
| Medical Facility | Contact Office |

**First-Aid Procedures (continued)**

***Minor First-Aid Treatment***

First-aid kits are kept in the supervisor's vehicle. If you sustain an injury or are involved in an accident requiring minor first-aid treatment:

1. Inform you supervisor.
2. Administer first-aid treatment to the injury or wound.
3. If a first-aid kit is used, indicate usage on the accident investigation report.
4. Access to a first-aid kit is not intended to be a substitute for medical attention.
5. Provide details to the safety coordinator for the completion of the accident investigation report.

***Non-Emergency Medical Treatment***

For non-life threatening work related injuries requiring professional medical assistance, the office must first authorize treatment. If you sustain an injury requiring treatment other than first aid:

1. Inform you supervisor.
2. Contact the office, turn information in to complete a notice of injury form, at that time you will be instructed as to what medical facility you can go to.
3. After your doctor appointment contact the office and give them an update on your status.
4. Provide details to the safety coordinator for the completion of the accident investigation report.

***Emergency Medical Treatment***

1. If you sustain a severe injury requiring emergency treatment:
2. Inform your supervisor or have one of your co-worker notify him.
3. Call for help or have one of your co-workers call (911).
4. Have some one notify the office with all the information need to fill out the notice of injury.
5. Provide details to the safety coordinator for the completion of the accident investigation report.

# First-Aid Instructions

In all cases requiring emergency medical treatment, immediately call or have a co-worker call to request emergency medical assistance.

**WOUNDS:**

*Minor*: Cuts, lacerations, abrasions or punctures
Wash the wound using soap and water; rinse it well.
Cover the wound using clean dressing.

*Major*: Large deep and bleeding
Stop the bleeding by pressing directly on the wound, using a bandage or cloth.
Keep pressure on the wound until you receive medical treatment.

**BROKEN BONES:**

Before the victim is moved, "splint the injured area. Use a board, cardboard, or rolled newspaper as a splint.

**BURNS:**

Thermal Heat
Rinse the burned area, without scrubbing it and immerse it in cold water; do not use ice water.
Blot dry the area and cover it using sterile gauze or a clean cloth.

Chemical
Flush the exposed area with cool water immediately for 15 to 20 minutes.

**EYE INJURY:**

Small particles
Do not rub your eyes.
Use the corner of a soft clean cloth to draw particles out or hold the eyelids open and flush the eyes continuously with water.

Large or stuck particles
If a particle is stuck in the eye, do not attempt to remove it.

Chemical
Immediately irrigate the eyes and under the eyelids with water for 30 minutes.

**NECK AND SPINE INJURY:**

If the victim appears to have injured his or her neck or spine, or is unable to move his or her arm or leg, do not attempt to move the victim unless it is absolutely necessary.

**HEAT EXHAUSTION:**

Loosen the victim's tight clothing.
Give the victim "sips" of cool water.
Make the victim lie down in a cooler place with the feet raised.

# Employee Warning Record

Employee Name: _____

Employee Number or SSN: _____

Position and Department: _____

Date of Warning: _____ Time: _____ AM / PM

Date of Violation: _____ Time: _____ AM / PM

Place of Violation: _____

Description of Violation: _____

_____

_____

Has employee been warned previously? Yes No

Date of previous warning(s): _____

Subject of previous warning(s): _____

Employee Remarks Concerning Violations

The absence of Employee remarks indicates agreement

_____

_____

_____

Employee Signature: _____ Date: _____

Corrective Action to be taken

_____

_____

Approved by: _____ Date: _____

I have received, read and understand this written warning, I further understand that this warning will be filed in my permanent employee record.

Employee Signature: _____ Date: _____

# SAFETY AWARENESS POLICY

**EMPLOYEE ACKNOWLEDGMENT**

I acknowledge that I have received a copy of Centerline Drilling, Inc. safety awareness policy. I have either read or have had the policy read to me, and have been offered the opportunity to have my questions answered by management. I understand how and why these rules and guidelines are important to my personal safety and to the safety of my fellow employees. I agree to follow current and future rules and guidelines of the safety policy. I understand that willful safety violations will result in disciplinary actions. I understand that I may be held responsible for damages to equipment and or property if the damage is caused by an unsafe act on my part.

The following acts will be considered grounds for disciplinary action up to and including immediate dismissal:

1. Any act of complete disregard of a safely rule or directive.
2. Failure or refusal to wear required safely or protective equipment or clothing.
3. Failure to report an accident or injury involving a fellow worker or myself.
4. Failure to report property or equipment damage or failure.
5. Reporting to work while under the influence of drugs or alcohol, or using drugs or alcohol at work.
6. Removal, defeating, defacing, destroying, or altering a required safety shield, guard or device from a piece of equipment regardless of ownership.

Penalties for Safety Violations

| | |
|---|---|
| 1st Offense: | Verbal warning from management or safety department. |
| 2nd Offense: | Written warning, placed in employee's personnel record. |
| 3rd Offense: | Written warning, suspension without pay at management's discretion. |
| 4th Offense: | Written warning, immediate dismissal. |

**I agree to uphold these conditions for as long as I am an employee with Centerline Drilling, Inc.**

Print Name _____
Last First Middle Initial

Signature _____ Date _____

Management _____ Date _____

# ACCIDENT INVESTIGATION

***Accident Investigation Procedures***

An accident investigation will be performed by the safety coordinator at the location where the accident occurred. The safety coordinator is responsible for seeing that the accident investigation reports are being filled out completely, and the recommendations are being addressed. The Safety coordinator will investigate all accidents, injuries and occupational disease using the follow investigation procedures.

1. Implement temporary control measures to prevent any further injuries to employees.
2. Review the equipment, operations and processes to gain an understanding of the accident situation.
3. Identify and interview each witness and any other person who might provide clues to the accident's causes.
4. Investigate casual conditions and unsafe acts; make conclusions based on existing facts.
5. Complete the accident investigation report.
6. Provide recommendations for corrective actions.
7. Indicate the need for additional or remedial safety training.

Accident investigation reports must be submitted to the office within 48 hours of the accident.

# ACCIDENT INVESTIGATION REPORT

REPORT # _____

COMPANY _____

ADDRESS _____

1. Name of injured _____ SS# _____
2. Sex ( )M ( )F Age _____ Date of Accident _____
3. Time of Accident _____ AM / PM Day of Accident _____
4. Employee's job title _____
5. Length of experience of job _____ Years _____ Months
6. Address of location where the accident occurred _____
7. Nature of injury, injury type and part of the body affected _____

_____

8. Describe the accident and how it occurred _____

_____

9. Cause of the accident _____

_____

10. Was personal protective equipment required? ( ) Yes ( ) No

    Was it provided? ( ) Yes ( ) No

    Was it being used? ( ) Yes ( ) No if "no", explain _____

    Was it being used as trained by supervisor or designated trainer? ( ) Yes ( ) No

    If "no", explain. _____

11. Witness(es) _____

_____

12. Safety training provided to the injured? ( ) Yes( ) No if "no", explain _____

_____

13. Interim corrective actions taken to prevent recurrence. _____

_____

14. Permanent corrective action recommended to prevent recurrence. _____

_____

15. Date of report _____ 20_____

Prepared by _____

Supervisor (signature) _____ Date _____

16. Status and follow-up action taken by safety coordinator. _____

_____

Safety Coordinator (signature) _____ Date _____

# INSTRUCTIONS FOR COMPLETING THE ACCIDENT INVESTIGATION REPORT

An accident investigation is not designed to find fault or place blame but is an analysis of the accident to determine causes that can be controlled or eliminated.

**(Items 1-6) Identification**: This section is self-explanatory.

**(Item 7) Nature of Injury**: Describe the injury, e.g., strain, sprain, cut, burn, fracture. **Injury Type**: First aid-injury resulted in minor injury/treated on premises; Medical-injury treated off premises by physician; Lost time-injury missed more than one day of work; No Injury-no injury, near-miss type of incident. **Part of the Body**: Part of the body directly affected, e.g., foot, arm, hand, head.

**(Item 8) Describe the accident**: Describe the accident, including exactly what happened, and where and how it happened. Describe the equipment or materials involved.

**(Item 9) Cause of the accident**: Describe all conditions or acts which contributed to the accident, i.e.,
a. unsafe conditions-spills, grease on the floor, poor housekeeping or other physical conditions.
b. unsafe acts-unsafe work practices such as failure to warn, failure to use required personal protective equipment.

**(Item 10) Personal protective equipment**: Self-explanatory

**Item II) Witness(es)**: List name(s), address(es), and phone number(s).

***(Item 12) Safety training provided:*** Was any safety training provided to the injured related to the work activity being performed?

**(Item 13) Interim corrective action**: Measures taken by supervisor to prevent recurrence of incident, i.e., barricading accident area, posting warning signs, shutting down operations.

**(Item 14)**: Self-explanatory

**(Item 15)**: Self-explanatory

**(Item 16) Follow-up**: Once the investigation is complete, the safely coordinator shall review and follow-up the investigation to ensure that corrective actions recommended by the safety committee and approved by the employer are taken, and control measures have been implemented.

# RECORDKEEPING PROCEDURES

***Recordkeeping Procedures***

1. The Safety coordinator will turn in the accident investigation report to the office.
2. The office will keep the Notice of Injury, the accident investigation report and any documents pertaining to the accident in the employee file.
3. The office will also keep a Log & Summary of Occupational Injuries and Illnesses on OSHA's form.
4. All records will be made available to the safety committee.

# TABLE OF CONTENTS
# FOR
# SAFETY RULES, POLICIES AND PROCEDURES


**ALL EMPLOYEES**

Lifting Procedures
General
When Lifting

Ladders and Step Ladders
Climbing a ladder

Driving/Vehicle Safety
Fueling vehicles
Driving rules

**OFFICE PERSONNEL**

Office Safety

Furniture Use

Equipment Use

**LABOR PERSONNEL**

Site Safety

Knives/Sharp Instruments

Hand Tool Safety
General
Hammers
Pliers
Saws

Electrical Powered Tools
General Power Saw Safety
Pneumatic Tools/Compressed Air

Personal Protective Equipment

Hazardous Materials

Vehicle/Trailer Safety

# TABLE OF CONTENTS
# FOR
# SAFETY RULES, POLICIES AND PROCEDURES

*Safety & Operating Instruction for Torch Handle, Cutting Attachments and Heating Nozzle*

**General**

Work Area
Protective Apparel
Fire Prevention

**Torch Handles**

Setting up the Equipment for Cutting
When you Finish the Cutting Operation
Reverse Flow Check Valves

**Testing Internal Check Valves & Torch Reverse**

Flow Check Valves
Flashback Arrestors

# ALL EMPLOYEES

## Lifting Procedures

### General

1. Test the weight of the load before lifting by pushing the load along its resting surface.
2. If the load is too heavy or bulky, use lifting and carrying aids such as hand trucks, dollies, pallet jacks and carts, or get assistance from a co-worker.
3. Never lift anything if your hands are greasy or wet.
4. Wear protective gloves when lifting objects with sharp corners or jagged edges.

### When lifting

1. Face the load.
2. Position your feet 6" - 12" apart with one foot slightly in front of the other.
3. Bend at the knees, not at the back.
4. Keep your back straight.
5. Get a firm grip on the object with your hands and fingers. Use handles when present.
6. Hold objects as close to your body as possible.
7. Perform lifting movements smoothly and gradually; do not jerk the load.
8. If you must change direction while lifting or carrying the load, pivot your feet and turn your entire body. Do not twist at the waist.
9. Set down objects in the same manner as you picked them up except in reverse.
10. Do not lift an object from the floor to a level above your waist in one motion. Set the load down on a table or bench and then adjust your grip before lifting it higher.

### Ladders and Step Ladders

1. Read and follow the manufacturer's instruction label affixed to the ladder if you are unsure how to use the ladder.

2. Do not use ladders that have loose rungs, cracked or split side rails, missing rubber foot pads or are otherwise visibly damaged.

3. Keep ladder rungs clean and free of grease. Remove buildup of material such as dirt or mud.

Ladders and Step Ladders (continued)

4. When performing work from a ladder, face the ladder and do not lean backward or sideways from the ladder.

5. Allow only one person on the ladder at a time.

6. Do not stand on the top two rungs of any ladder.

7. Do not stand on a ladder that wobbles, or that leans to the left or right.

8. Do not try to "walk" a ladder by rocking it. Climb down the ladder, and then move it.

Climbing a Ladder

1. Face the ladder when climbing up or down.

2. Do not carry items in your hands while climbing up or down a ladder.

3. Maintain a three point contact by keeping both hands and one fool or both feet and one hand on the ladder at all times when climbing up or down.

# OFFICE PERSONNEL

## Office Safety:

1. Do not place material such at boxes or trash in walkways and passageways.
2. Do not throw matches, cigarettes or other smoking materials into trash baskets.
3. Do not kick objects out of your pathway; pick them up or push them out of the way.
4. Keep floors clear of items such as paper clips, pencils, tacks or staples.
5. Straighten or remove rugs and mats that do not lie flat on the floor.
6. Mop up water around drinking fountains and drink dispensing machines.
7. Do not block your view by carrying large or bulky items; use a dolly or hand truck or get assistance from a fellow employee.
8. Store sharp objects such as pens, pencils, letter openers or scissors in drawers or with the points down in a container.
9. Carry pencils, scissors and other sharp objects with the points down.
10. Use a ladder or step stool to retrieve or store items that are located above your head.
11. Do not run on stairs or take more than one step at a time.
12. Keep doors in hallways fully open or fully closed.
13. Use handrails when ascending or descending stairs or ramps.
14. Obey all posted safety and danger signs.

## Furniture Use:

1. Open one file cabinet drawer at a time.
2. Close drawers and doors immediately after use.
3. Use the handle when closing doors, drawers and files.
4. Put heavy files in the bottom drawers of the filing cabinets.
5. Do not tilt the chair you are sitting in on its back two legs.
6. Do not stand on furniture to reach high places.

## Equipment Use:

1. Do not use fans that have excessive vibrations, frayed cords or missing guards.
2. Do not place floor type fans in walkways, aisles or doorways.
3. Do not connect multiple electrical devices into a single outlet.
4. Do not use extension or power cords that have the ground prong removed or broken off.
5. Do not use frayed, cut or cracked electrical cords.
6. Use a cord cover or tape the cord down when running electrical or other cords across aisles, between desks or across entrances or exits.

# LABOR PERSONNEL

**Site Safety:**

1. Do not start work until barricades, barrier logs, fill or other protection have been installed.
2. Do not approach any heavy equipment until the operator has seen you and has signaled to you that is safe to approach.
3. Walk around or step over holes, rocks, roots materials or equipment in your pathway.
4. Do not work outdoors during lightning storms.
5. Drink plenty of clear liquids during your breaks.
6. Take breaks in shaded areas.

**Knives/Sharp Instruments:**

1. Use knives for the operation for which they are made.
2. Do not use knives that have broken or loose handles.
3. Do not use knives as screwdrivers, pry bars, can openers or ice picks.
4. When handling knife blades and other cutting tools, direct sharp points and edges away from you.
5. Cut in the direction away from your body when using knives.

**Hand Tool Safety:**

**General:**

1. Keep the blade of all cutting tools sharp.
2. Do not carry sharp or pointed hand tools such as screwdrivers, scribes, chisels or files in your pocket unless the tool or pocket is sheathed.
3. Tag worn, damaged or defective tools "Out of Service" and do not use them.
4. Do not use a tool if its handle has splinters, burrs, cracks, splits or if the head of the tool is loose.
5. Do not use impact tools such as hammers, steel stakes or chisels that have mushroomed heads.
6. Do not perform "make-shift" repairs to tools.
7. Do not throw tools from one location to another or from one employee to another.
8. Transport hand tools only in toolboxes or tool belts. Do not carry tools in your clothing.

**Hammers:**

1. Do not use a hammer if your hands are oily, greasy or wet.
2. Do not strike objects with the cheek of the hammer.
3. Do not strike on hammer against another hammer.

**Pliers:**

1. Do not attempt to force pliers by using a hammer on them.
2. Do not use pliers that are cracked, broken or sprung.

**Saws:**

1. Keep control of saws by releasing downward pressures at the end of the stroke.
2. Do not use a saw that has dull saw blades.
3. Oil saw blades after each use.
4. Keep hands and fingers away from the saw blade while you are using the saw.
5. Do not carry a saw by the blade.
6. When using a hand saw, hold workpiece firmly against the worktable.

# Labor Personnel

**Hand Tool Safety (continued):**

**Electrical Powered Tools:**

1. Do not use power equipment or tools on which you have not been trained.
2. Keep power cords away from the path of power saws.
3. Do not use cords that have splices, exposed wires or cracked or frayed ends.
4. Do not carry plugged in equipment or tools with your finger on the switch.
5. Do not carry equipment or tools by the cord.
6. Turn the tool off before plugging or unplugging it.
7. Do not leave tools that are "on" unattended.
8. Do not handle or operate electrical tools when you hands are wet or when you are standing on wet floors or wet ground.
9. Do not use extension cords or other rounded three pronged power cords that have the ground prong removed or broken off.
10. Do not use an adapter that eliminates the ground such as a cheater plug.
11. Do not drive over, drag, step on or place objects on a cord.

**General Power Saw Safety:**

1. Wear the prescribed personal protective equipment such as goggles, gloves, dust masks and hearing protection when operation the power saw.
2. Do not use a power saw that has cracked, broken or loose guards or other visible damage.
3. Turn off the saw before making measurements, adjustments or repairs.
4. Keep you hands away from the exposed blade.
5. Operate the saw at full cutting speed with a sharp blade to prevent kickbacks.
6. If the saw becomes jammed, turn the power switch of the saw to "OFF" before pulling out the incomplete cut.
7. Do not alter the anti-kickback device or blade guard.
8. When using the power saw, do not reach across the cutting operation.
9. When using the power saw, do not hold the work piece against your body when making the cut.

**Pneumatic Tools/Compressed Air:**

1. Do not point a compressed air hose at bystanders or use it to clean your clothing.
2. Do not use pneumatic tools that have handles with burrs or cracks.
3. Lock and/or tag tools "Out of Service" to prevent usage of the tool.
4. Do not use compressors if their belt guards are missing. Replace the belt guards before using the compressor.
5. Turn the power switch of the tool to "Off" and let it come to a complete stop before leaving it unattended.
6. Disconnect the tool from the airline before making any adjustments or repairs to the tool.

**Personal Protective Equipment:**

1. Do not wear hard hats that are dented or cracked.
2. Do not continue to work if your safety glasses become fogged. Stop work and clean the glasses until the lenses are clear and defogged.
3. Wear your earplugs or earmuffs in area posted "Hearing Protection Required".
4. Wear work gloves when handling wire mesh and steel.

# Labor Personnel

**Hazardous Materials:**

1. Follow instructions on the label and in the corresponding Safety Data Sheet for each chemical product you will be using in your workplace.
2. Do not use protective clothing or equipment that has split seams, pin holes, cut tears, or other visible signs of damage.
3. Each time you use your gloves, wash them before removing the glove, using cold tap water and normal hand washing motion. Always wash your hands after removing the gloves.
4. Do not use chemicals from unlabeled containers or unmarked cylinders.
5. Always use chemical goggles and a face shield before handling chemicals labeled "Corrosive" or "Caustic".
6. Do not store chemical containers labeled "Oxidizer" with containers labeled "Corrosive" or "Caustic".
7. Do not smoke while handling chemicals labeled "Flammable".

**Vehicle/Trailer Safety:**

1. Set the parking brake in the towing vehicle and use wheel blocks to chock the wheels of the trailer before removing any equipment from the trailer.
2. Secure equipment to the vehicle with chains or straps to eliminate or minimize shifting of the load.
3. No one is permitted to ride in the trailer.
4. Take slow wide turns when towing trailers containing equipment or materials.
5. Do not exceed the load capacity as posted on the trailer door of the trailer.
6. Do not place all the heavy equipment on one side of the trailer.

## *SAFETY AND OPERATING INSTRUCTIONS FOR TORCH HANDLES, CUTTING ATTACHMENTS AND HEATING NOZZLES:*

### General Safety Information

**The Work Area:**

1. The work area should have a fireproof floor, concrete floors are recommended.
2. Use heat resistant shields to protect nearby walls or unprotected flooring from sparks and hot metal.
3. Adequate ventilation is required to prevent the concentration of oxygen/fuel gases and /or toxic fumes. It is important to remember that oxygen itself will not burn, but the presence of pure oxygen serves to accelerate combustion and cause materials to burn with great intensity. Oil, grease and other flammable material can ignite and burn vigorously is the presence of oxygen.
4. Workbenches or tables used during oxy-fuel processes must have fireproof tops. Firebricks are commonly used for topping these surfaces and supporting the work.

**Protective Apparel:**

1. Protect yourself from sparks, flying slag and flame brilliance at all times. Select safety goggles with tempered lenses shaded 4 or darker to protect your eyes from injury and provide good visibility of the work.
2. Wear only flame resistant clothing, protective gloves, sleeves, aprons and shoes to protect skin and clothing from sparks and slag. Keep all clothing free of oil and grease.

**Fire Prevention:**

1. Inspect the equipment for oil grease and damaged parts. Do not use the equipment if oil, grease or damage is evident. Oil or grease can ignite and burn violently in the presence of oxygen. Have a qualified repair technician clean and/or repair the equipment before using it.
2. Keep flames and sparks away from cylinders and hoses.
3. Flying sparks can travel as much as 35 feet. Move combustibles a safe distance away from the area where oxy-fuel operations are performed.
4. Keep and approved fire extinguisher of the proper size and type in the work area. Inspect it regularly to ensure that it is in proper working order. Know how to use the fire extinguisher.
5. Use oxy-fuel equipment only with gases for which it is intended.
6. Never test for a gas leak with a flame. Use an approved leak detector solution.
7. When the work is complete, inspect the work area for possible fire or smoldering materials.

**Torch Handles**
**Setting up the Equipment for Cutting**

1. Examine the hoses before attaching them to the regulators or torch handle. Do not use the hoses if cuts, burns, worn areas of damaged fittings are found. Repair or replace the hoses. Be sure the regulators and any other apparatus used with the torch are in a good and safe operating condition.

2. Connect the oxygen hose to the oxygen regulator. Tighten the connections firmly with a wrench.

3. Open the cylinder valves as directed by the "Safety and Operating Instructions for Single and Two Stage Regulators". Never stand directly in front of or behind a regulator when opening the cylinder valve. If there is a fire or explosion, you will not be in its path if you stand so the cylinder is between you and the regulator.

4. Adjust the oxygen regulator to allow 3 to 5 PSIG to escape through the hose. Allow oxygen to flow for 5 to 10 seconds to clear the hose of dirt, dust or preservative, then shut off the oxygen flow.

5. Attach and clear the fuel hose in the same manner. Be sure to clear the hoses in a well-ventilated area. Escaping gases create conditions for fires and explosions. Keep hoses clear of any falling metal, slag or sparks. Never allow hoses to become coated with oil, grease or dirt. Such coatings could conceal damaged areas.

6. Inspect the cutting torch and hose connections for oil, grease or damaged parts. Do not use if oil, grease or damage is detected.

7. Inspect the torch handle head. The tapered seating surfaces must be in good condition. If dents, burrs or damaged seats are present, the seat must be repaired or replaced. If the torch is used with poor seating surfaces, backfire or flashback may occur.

8. Using a 3/4" open-end wrench, check the flashback arrestors to make sure they are tight. If they are loose a flashback may have occurred.

9. Attach the hoses to the torch handle or accessory check valves.

**When You Finish the Cutting Operation.**

1. First close the preheat oxygen valve. Then close the fuel valve. If this procedure is reversed a "pop" may occur. The pop throws carbon and soot back into the torch and may, in time partially clog the gas passages.

2. Close both cylinder valves.

**Labor Personnel**

**When You Finish the Cutting Operation (continued).**

3. Open the cutting torch preheat oxygen valve and cutting oxygen valve. This will release the oxygen pressure in the system. Close the torch and preheat valve once all gas has been released.

4. Turn the adjusting screw on the oxygen regulator counterclockwise to release all spring pressure. Close the oxygen valve. Never open both full and oxygen valves at the same time when purging the system. A reverse flow of gas may occur.

5. Repeat steps 3 and 4 for the fuel system.

6. Check the gauges after a few minutes to be sure cylinder valves have been shut off properly. Pressure gauges should read no pressure.

**Reverse Flow Check Valves:**

1. Many Victor torches and handles are equipped with internal check valves. These models are indicted by a "C" after the model number, for example, 315C. It is strongly recommended that check valves be used on any oxy-fuel torch to reduce the possibility of mixing gases in the hoses and regulators. If necessary check valves are required, connect them to the proper control valve or inlet connection. Check valves are not the same as flashback arrestors. Check valves are designed to prevent gases from mixing upstream (toward the bottles) of the torch. Flashback arrestors are designed to prevent mixed gases from igniting up-stream of the torch.

2. Accessory reverse flow check valves and internal check valves are mechanical devices that can leak when dirty or damaged. Inspect the check valves at least every six months, more often if the hoses are frequently disconnected. Careless usage, dirt or abuse can shorten the service life of check valves thus requiring better-vented area. The escaping gases create conditions for fires and explosions. Do not allow smoking or open flames in the test area.

**Testing Internal Check Valves and Torch Reverse Flow Check Valves:**

1. Turn both regulators adjusting screw counterclockwise so that no pressure will be delivered.

2. Disconnect one hose from one of the regulators.

3. Open all torch control valves.

4. Plug the tip end.

5. Adjust the regulator that is not disconnected until a 2-5 PSIG reading appears on the L.P. gauge.

6. Put the end of the hose that is disconnected from the regulator under water or cover the end of the hose with an approved leak detector solution.

7. Bubbles will appear if the check valve is leaking. There should be no more than two bubbles in 10 seconds.

**Testing Internal Check Valves and Torch Reverse Flow Check Valves (continued):**

8. If the check valve leaks, reconnect the hose to the regulator. Unplug the cutting tip. Flush for 3-5 seconds with 10PSIG furl gas or PSIG oxygen, depending on the check valve tested.

9. Retest the check valve. If the torch has an internal check valve and is still leaking, take the torch to a qualified repair technician for replacement. If the torch has accessory check valves they must be replaced.

10. Test the other check valve. Reconnect the hose that was disconnected for the first test. Disconnect the other hose.

11. Follow the same procedures as the first test.

12. After both check valves test good, purge both the oxygen and fuel lines before lighting the torch. Test all hose connections for leaks.

## Flashback Arrestors

1. Many Victor torches and handles are equipped with internal flashback arrestors and reverse flow check valves. These models are indicated by an "F" in the model name, for example, 315FC. The flashback arrestor is designed to prevent flashback flame form burning in the hose and gas supply system. A very fine "filterlike" sintered stainless steel flame barrier stops flashback flame.

2. For maximum service life of the flashback arrestor, purge all supply lines and hoses before installing onto the torch handle. This removes loose material contained in the hose or regulator that could restrict flow through the flashback arrestor.

3. Flow restriction and torch over-heating results if dirt or "oily" LOG residuals are allowed to flow into the flashback arrestor. Make sure not to draw liquid. Always store and use cylinders in the upright position.

4. The flame arrestor element cannot be field tested or repaired. The flame arrestor element must be replaced after a maximum of 5 years of service or whenever there are signs of discoloration of the flame arrestor element caused by heat, poor torch performance, restricted flow, signs of carbon soot in the torch inlet, flame damaged or melted check valves, or if the flashback arrestor has become loose in the body. If any of these conditions exists, have the torch tested and repaired by a qualified repair technician.

5. Operating Data

| Gas | Maximum Pressure | Maximum Capacity |
|---|---|---|
| Oxygen | 150 PSI | Welding- 3" |
| Acetylene | 15 PSI | Cutting- 8" |

6. If the torch is equipped with internal flashback arrestors it is not advisable to use accessory flashback arrestors, as excessive flow restriction may occur.

## HAZARD COUMMUNICATION WRITEN PROGRAM

This program has been prepared to comply with the requirements of the Federal OSHA Standard 1926.59 and to insure that information necessary for the safe use, handling and storage of hazardous chemicals is provided to and made available to employees.

This program includes guidelines on identification of chemical hazards and the preparation and proper use of container labels, placards and other types of warning devices.

### 1) Chemical Inventory:

a) CENTERLINE DRILLING, INC. maintains an inventory of all known chemicals in use on the worksite. A chemical inventory list is available from the Superintendent.

b) Hazardous chemicals brought onto the work site by CENTERLINE DRILLING, INC. will be included on the hazardous chemical inventory list.

### 2) Container Labeling:

a) All chemicals on site will be stored in their original or approved containers with a proper label attached, except small quantities for immediate use. Any container not properly labeled should be given to the Superintendent for labeling or proper disposal.

b) Workers may dispense chemicals from original containers only in small quantities intended for immediate use. Any chemical left after work is completed must be returned to the original container or the Superintended for proper handling.

c) No unmarked containers of any size are to be left in the work area unattended.

d) CENTERLINE DRILLING, INC. will rely on manufacturer applied labels whenever possible and will ensure that these labels are maintained. Containers that are not labeled or on which the manufacturer's label has been removed will be relabeled.

e) CENTERLINE DRILLING, INC. will ensure that each container is labeled with the identity of the hazardous chemical contained and any appropriate hazard warnings.

### 3) Material Safety Data Sheets (MSDS):

a) Employees working with a Hazardous Chemical may request a copy of the safety data sheet (MSDS). Requests for MSDS's should be made to the Superintendent.

b) MSDS should be available and standard chemical reference may also be available on the site to provide immediate reference to chemical safety information.

c) An emergency procedure to gain access to MSDS's information will be established.

**4) Employee Training:**

Employees will be trained to work safely with hazardous chemicals. Employee training will include:

a) Methods that may be used to detect a release of a hazardous chemical(s) in the workplace.
b) Physical and health hazards associated with chemicals.
c) Protective measures to be taken.
d) Safe work practices, emergency responses and use of personnel protective equipment.
e) Information on the Hazard Communication Standard including:
   - Labeling and warning systems and
   - An explanation of Material Safety Data Sheets.

**2) Personal Protective Equipment (PPE):**

a) Required PPE is available from the Superintendent. Any employee found in violation of PPE requirements may be subject to disciplinary actions up to and including discharge.

**3) Emergency Response:**

a) Any incident of over exposure or spill of a hazardous chemical/substance must be reported to the Superintendent at once.

b) The foremen or the immediate supervisor will be responsible for insuring that proper emergency response actions are taken in leak/spill situations.

**4) Hazards of Non-Routine Tasks:**

a) Supervisors will inform employees of any special tasks that may arise which would involve possible exposure to hazardous chemicals.

b) Review of safe work procedures and use of required PPE will be conducted prior to the start of such tasks. Where necessary, areas will be posted to indicate the nature of the hazard involved.

**5) Informing Other Employers:**

a) Other on site employers are required to adhere to the provisions of the Hazard Communication Standard.

b) Information on hazardous chemicals known to be present will be exchanged with other employers. Employers will be responsible for providing necessary information to their employees.

c) Other on site employers will be provided with a copy of CENTERLINE DRILLING, INC. hazard communication program.

**6) Posting:**

a) CENTERLINE DRILLING, INC. has posted information for employees at this job site on the Hazard Communication Standard. This information can be found at the job site office.

# Hazard / Control Analysis

| Job Steps | Hazards | Controls |
|---|---|---|
| Drilling | Hanging loads<br>Rotative Machinery<br>Hydraulic Equipment<br>Specialized equipment.<br>Flying objects<br>Splashes<br>Handling Materials. | • All employees shall use PPE and safety equipment that will provide appropriate protection.<br>• PPE required 100% of the time is hard hat (with bill facing forward), Safety glasses, Safety toe work boots, high visibility vest.<br>• All the employees and personnel must always follow company procedures.<br>• All personnel should ask and follow the Foreman's lead and procedures to avoid any incidents.<br>• Inspect all hydraulic hoses prior to start performing any tasks with the equipment.<br>• Never Leave equipment unattended without securing it.<br>• Good communication within the crew is important to avoid any incidents.<br>• Operations nearby should be avoided if possible.<br>• Water and drilling spoils/cuttings will always be contained but some splashes may be caused. Follow procedures to control.<br>• Operators must be trained on the specific equipment to be operated.<br>• Locate utilities and any other underground/overhead features/items prior to positioning crane<br>• Equipment shall be on firm, stable ground capable of supporting operations |
| Welding/Burning | Eye Damage.<br>Electric Shock.<br>Cuts & Burns.<br>Fire.<br>Burns | • All employees shall use PPE and safety equipment that will provide appropriate protection.<br>• PPE required 100% of the time is hard hat (with bill facing forward), Safety glasses, Safety toe work boots, high visibility vest.<br>• A 20 lb., ABC dry chemical extinguisher (or equivalent) must be immediately available in the work area and must be maintained in a state of readiness for instant use.<br>• During welding/cutting operations, proper welding gloves and a full-face, UV-ray protective shield shall be worn to prevent injuries to the operator.<br>• All electrical cords shall be inspected and in good working condition prior to use (no missing ground pins, no damaged.<br>• Always inspect and clear the area around cutting/welding prior to start any welding/burning task. |
| Rigging | Lifting heavy loads.<br>Manual lifting, light loads < 50 lb.<br>Dropping loads. | • All employees shall use PPE and safety equipment that will provide appropriate protection.<br>• PPE required 100% of the time is hard hat (with bill facing forward), Safety glasses, Safety toe work boots, high visibility vest.<br>• All rigging shall be performed and visually inspected before each use by a Competent Person. |

| | | |
|---|---|---|
| | Failure of rigging equipment. | • Damaged rigging shall be immediately removed from the job site.<br>• Proper rigging shall always be used .<br>• Tag lines shall be installed on all loads before flying. (for Crane operations).<br>• Avoid the flying of loads over the heads of workers.<br>• Slings shall not be shortened with knots, bolts, or other makeshift devices.<br>• Slings shall be padded or protected from sharp edges.<br>• The area below suspended loads shall be kept clear of personnel.<br>• Do not allow hands between the slings and load while the sling is being tightened.<br>• When lifting loads manually, bend your knees and keep your back as straight as possible. Use back braces (up to 50 lbs.) |
| Crane Operation | Loss of load during a crane lift<br><br>Struck by moving equipment<br><br>Risk of injury from equipment failure or<br>operator error.<br><br>Risk of tip over due to unstable ground falling<br>objects and or equipment failure.<br><br>Miscommunication between operator and<br>signalman. | • Only workers with proof of training will operate the crane.<br>• The Operator shall have final responsibility and control over all crane operations.<br>• The operator shall refuse to proceed if there is doubt regarding safety.<br>• The Operator shall not engage in any practice that may divert his/her attention while engaged in crane operations.<br>• The Operator must be able to see and hear within reasonably acceptable limits.<br>• Crane operators must have a clear view of the load and flagman or be in contact with the signal man at all time.<br>• Should the crane, rigging, or load strike another object, the crane shall be immediately shut down until re-inspected, and approved for operation by a qualified person.<br>• Never leave the controls while there is a load on the hook.<br>• Before making the pick, the Operator shall be responsible for determining that the load is properly secured and balanced.<br>• All mobile cranes shall be properly barricaded before use.<br>• At the end of the workday, mobile crane booms shall be retracted and lowered, and the cabin locked, and keys removed. |
| Unloading/Storing Materials and Equipment | Soft Tissue Injuries (Sprains/Strains) | • Ensure workers are physically prepared for the tasks they will perform.<br>• Inspect site for conditions that might affect delivery or transfer of material.<br>• The material must be staged to limit the number of times it must be moved.<br>• When transporting material by carrying, especially up and down stairs, the employee cannot carry anything that blocks their ability to see where they are walking.<br>• Do not lean forward, use both arms, and keep your stomach muscles tight.<br>• If you must pull something, face the object squarely, with one foot at least 12inches, keep your back straight, bend your knees slightly and pull with one motion.<br>• Always lift with your legs, keep your back straight, and avoid twisting by moving your feet.<br>• Get help with heavy or awkward loads.<br>• Try not to lift over 25% of your body weight. |

# Notice of Intent to Award

DATE: February 9, 2021

TO: Centerline Drilling, Inc.
1696 Old Okeechobee Road #3C
West Palm Beach, FL 33409

ATT: John Say, Jr., President

Project: Construction of Surficial Aquifer Well 12A and Surficial Wellfield Rehabilitation Program (W2111)
Town of Jupiter Utilities, Jupiter, Florida

Gentlemen:

This is to advise that on February 16, 2021, a recommendation for award of the above referenced Contract will be made to the Jupiter Town Council as a result of your bid in the amount of $691,099 submitted to the Town of Jupiter (Owner) on January 13, 2021.

Two (2) sets of the Project Manual for this project are attached. Each set contains an unexecuted agreement. Please sign both sets of the Agreement and include the following additional documentation necessary for execution of the Agreement/Contract. DO NOT DATE ANY OF THE DOCUMENTS. The Town will date them upon execution.

- Two original signed and notarized Payment Bonds (on Bond form included with each project manual).
- Two original signed and notarized Performance Bonds (on Bond form included with each project manual).
- Four original Power of Attorneys; one each to accompany each Payment and Performance bond.
- Two current Certificates of Insurance naming the Town of Jupiter as an additional insured per the requirements of the contract.

Please return both signed Project Manuals with supporting documentation to our office for final signatures.

Your attention is invited to the provision whereby your proposal guarantee may be forfeited in the event the Agreement with satisfactory bonds, insurance, power of attorneys is not executed and delivered to the Owner within fifteen (15) consecutive calendar days from February 11, 2021.

One fully executed original and one copy of the executed Agreement/Contract will be provided to you along with Conformed Construction Documents on or before the Pre-Construction meeting.

Sincerely,

Rebecca J. Wilder, P.E.
Town of Jupiter
Utilities Facilities Manager

# Notice of Award

DATE: February 17, 2021

TO: Centerline Drilling, Inc.
1696 Old Okeechobee Road #3C
West Palm Beach, FL 33409

ATT: John Say, Jr., President

Project: Construction of Surficial Aquifer Well 12A and Surficial Wellfield Rehabilitation Program (W2111)
Town of Jupiter Utilities, Jupiter, Florida

Gentlemen:

This is to advise you that on February 16, 2021, the Jupiter Town Council approved award of a construction contract to your firm, for the above referenced project as a result of your bid on January 13, 2021, in the amount of $691,099.

One fully executed original and one copy of the executed Agreement/Contract will be provided to you along with Conformed Construction Documents on or before the date of the Pre-Construction meeting. A Notice to Proceed will be issued for commencement of the Contract Time.

We look forward to working with you on this project.

Sincerely,

Rebecca J. Wilder, P.E.
Town of Jupiter
Utilities Facilities Manager

# Agreement (Contract) Between Owner and Contractor

This Agreement (Contract) made this 18 day of March, 2021 by and between the Town of Jupiter, a public agency of the State of Florida hereinafter designated as the "the TOWN" and "OWNER", and Centerline Drilling, Inc., 1696 Old Okeechobee Road #3C, West Palm Beach, Florida 33409, a Corporation, 42-155177 (FEIN number) hereinafter designated as "the CONTRACTOR", in consideration of the mutual covenants hereinafter set forth agree as follows:

**ARTICLE 1. WORK.**

1.1 CONTRACTOR shall complete all Work as specified or indicated in the Contract Documents. The Work is generally described as follows:

Furnish all permits, labor, equipment and materials necessary to perform well maintenance, rehabilitation and/or replacement of Surficial Aquifer production wells for the Town of Jupiter, located in Jupiter, Florida. Well maintenance activities may include but are not limited to removal/reinstallation of wellhead including downhole equipment and well piping; pump and motor inspection, repair and/or replacement of well mechanical components including miscellaneous welding, well disinfection and bacteriological clearance. Well rehabilitation activities may include but are not limited to removal/reinstallation of wellhead components, static and dynamic downhole well video, brushing existing well casing, clean-out open hole, chemical treatment of wells, removal/replacement of gravel pack, well development including air lift development, high velocity jetting with simultaneous air lift development and pump development, well performance pump testing, well disinfection and bacteriological clearance, site restoration, and completion of all required work to the extent the well facility has been successfully rehabilitated, returned to service and accepted by the OWNER based on the intent of the contract documents. Well replacement activities may include but are not limited to abandonment of an existing well and replacement with a well approximately 160' deep with the top 120' being 20" PVC casing and bottom 40' being either 12" open hole, open hole with liner or 12" stainless steel screen including well construction permitting, drill site preparation, pilot hole construction and logging, well drilling and construction, well development, step rate pump testing, video logging, well disinfection and testing, well site restoration and all other incidentals as outlined on the bid documents and all appurtenances necessary to complete the Work based on the intent of the contract documents.

1.2 The Project for which the Work under the Contract Documents may be the whole or only a part is generally described as follows: **CONSTRUCTION OF SURFICIAL AQUIFER WELL 12A AND SURFICIAL WELLFIELD REHABILITATION PROGRAM (W2111) FOR THE TOWN OF JUPITER UTILITIES, JUPITER, FLORIDA**

**ARTICLE 2. HYDROGEOLOGIST.**

2.1 The Project has been designed by the following: JLA Geosciences, 1931 Commerce Way, suite 3, Jupiter, FL 33458.

2.2 The Town of Jupiter will administer the contract during the construction phase. The Hydrogeologist will serve as the Owner's Representative during the course of the Contract.

**ARTICLE 3. CONTRACT TIME.**

3.1 The Work will have a substantial completion date and a final completion date after the date when the Contract Time commences to run as provided in Paragraph 4.01 of the General Conditions, and as outlined below. There are two substantial and two final completion dates that will apply to this

Contract for the base and additive alternate bids, respectively. Further, all work associated with the additive alternate must be completed between May 15 and September 15. A Notice to Proceed (NTP) will be issued for the base bid. Should the Owner elect to proceed with the additive alternate bid, then a separate NTP will be provided for the additive alternate bid. The Contract durations noted below begin on the date of the Notice to Proceed. The work will be completed and ready for substantial and final payment in accordance with Article 15 of the General Conditions and as outlined below.

**Contract Durations for Well Rehabilitation (Base Bid) Scope:**
(Applies to all Work associated with Well Maintenance and Rehabilitation)

| | |
|---|---|
| Substantial Completion: | 365 calendar days from Notice to Proceed |
| Final Completion: | 365 calendar days from Notice to Proceed |

**Contract Durations for Well 12A (Additive Alternate Bid) Scope:**
(Applies to all Work associated with Abandonment of Well 12 and Construction of 12A):

| | |
|---|---|
| Substantial Completion: | 105 calendar days from Notice to Proceed |
| Final Completion: | 135 calendar days from Notice to Proceed |

3.2 The undersigned understands the Contract time starts on the date of Notice to Proceed. The undersigned understands the Contract Time to Substantial Completion includes time for Contractor to obtain permits, submit and obtain shop drawing approvals, order materials, and substantially complete all the Work required of the Contract. Substantial Completion shall include all work required to abandon all existing wells, construct all new wells, testing and clearance of all wells, submission of well completion reports, final well surveys and final acceptance by PBCHD. Final Completion shall include completion of site restoration, punch list items, demobilization from site, record drawings, and other closeout documents.

3.3 Should Owner elect to proceed with Wells 12 and 12A (bid alternate) then all work associated with this site shall be completed between May 15 and September 15. Failure to complete the work during this time frame and within the contract duration will result in assessment of liquidated damages in the amount of $750/day until the work is substantially complete.

3.4 Unless extended or terminated, the period of performance of this CONTRACT shall commence upon the effective date of execution by the OWNER and continue for a period of 365 days or three hundred and sixty-five calendar days. Written Notice to Proceed and Work Order duration will be mutually agreed upon by both the CONTRACTOR and OWNER and provided in Work Orders outlining work. The CONTRACTOR shall not proceed with work under this CONTRACT until a Work Order with written Notice to Proceed is received from the OWNER.

3.5 Owner and Contractor may agree to renew this Contract at the Contract Unit Prices for items in the Base Bid, Well Rehabilitation, for two (2) additional one (1) year terms, for a total Contract period of three (3) consecutive years. Renewal of this Contract is at the Owner's sole discretion and is subject to fiscal appropriation by the Jupiter Town Council in either or both the Town's Community Investment Program (CIP) and fiscal year operating budgets. If the Contract is renewed, it will be done so by written change order to the Contract and are subject to the same terms, conditions, and unit pricing set forth in the initial Contract and any written amendments/change orders signed by both parties (Owner and Contractor). No compensation shall be made for costs associated with renewal of the Contract. Renewals are contingent upon satisfactory performance evaluations by the Owner and subject to the availability of fiscal year funding approved by the Jupiter Town Council. Contractor may elect not to

extend the Contract with 90 days written notice to Owner. Owner is not obligated to extend the Contract.

Regardless of anything to the contrary, this Contract may be terminated by the Owner at any time and for any reason. Further, the Contractor agrees that it will not be entitled to any claims and/or damages resulting from such termination, including, but not limited to, lost profits, direct or indirect damages, and consequential special or punitive damages.

3.6 The parties agree that the TIME IS OF THE ESSENCE, in the performance of each and every obligation under this CONTRACT. The CONTRACT may be changed only by a change order to the CONTRACT Work Order amendments to individual Work Orders must be completed in writing and signed and dated by Contractor and Owner.

3.7 Liquidated Damages. OWNER and CONTRACTOR recognize that time is of the essence of this Agreement and that OWNER will suffer financial loss if the Work is not substantially complete within the time specified in paragraph 3.1 above, plus any extensions thereof allowed in accordance with Article 11 of the General Conditions. They also recognize the delays, expense and difficulties involved in proving in a legal or arbitration preceding the actual loss suffered by OWNER if the Work is not substantially complete on time. Accordingly, instead of requiring any such proof, OWNER and CONTRACTOR agree that as liquidated damages for delay (But not as a penalty) CONTRACTOR shall pay OWNER Seven Hundred and Fifty 00/100 dollars ($750.00) for each day that expires after the time specified in Paragraph 3.1 for substantial completion until the Work is substantially complete, and Five Hundred 00/100 dollars ($500.00) for each day that expires after the time specified in Paragraph 3.1 from the date of final completion until the work has reached final completion. Final completion includes demobilization from the site. Owner may withhold payment to compensate for liquidated damages either by increasing the amount of money being held in retainage or deduct the amount due in Liquidated Damages from the final payment application. Liquidated damages under this Contract apply to each the substantial completion date and the final completion date.

3.8 The provision of Liquidated Damages for delay shall in no manner affect the TOWN's right to terminate the CONTRACT. The OWNER'S exercise of the right to terminate shall not release the CONTRACTOR from his obligation to pay Liquidated Damages. It is further agreed that the OWNER may deduct from the balance of the CONTRACT sum held by the OWNER the Liquidated Damages stipulated herein or such portions as said balance will cover.

**ARTICLE 4. CONTRACT PRICE.**

4.1 OWNER shall pay CONTRACTOR for performance of the Work in accordance with the Contract Documents in current funds according to the Contract Unit Prices.

4.2 No guarantee is expressed or implied as to the total quantity of commodities/services to be purchased under any open end Contract. Estimated quantities will be used for Bid comparison purposes only. The Owner reserves the right to issue Work Orders as and when required for proposed work for any or all bid items or any combination thereof. Work under this Contract is subject to fiscal appropriation by the Jupiter Town Council in either or both the Town's Community Investment Program (CIP) and fiscal year operating budgets. Estimated funding budgets anticipated being available for the original contract term and subsequent renewals are provided in the table below.

4.3 The Owner reserves the right to purchase commodities/services specified herein through contracts established by other governmental agencies or through separate procurement actions due to unique or

special needs. If an urgent delivery is required within a short period than the delivery time specified in the Contract, and if the seller is unable to comply therewith, the Owner reserves the right to obtain such delivery from others without penalty or prejudice to the Owner or to the Bidder.

**Anticipated Estimated Annual Funding**
**Town of Jupiter Utilities**
**Construction of Surficial Aquifer Well 12A and**
**Surficial Wellfield Rehabilitation Program Contract (W2111)**

| Term/Years | Description | Estimated Value |
|---|---|---|
| Initial Term (1-year) | Well Rehabilitation & Investigation (CIP) | $261,000 |
| | Well Mechanical Repairs & Replacements (Operating, R&M) | $60,000 |
| | Unanticipated Emergency Repairs | $50,000 |
| | Well 12A Replacement (CIP) | $275,000 |
| | **Initial Term Estimated Total** | **$646,000** |
| 1st Renewal (1-year) | Well Rehabilitation & Investigation (CIP) | $269,000 |
| | Well Mechanical Repairs & Replacements (Operating, R&M) | $62,000 |
| | Unanticipated Emergency Repairs | $50,000 |
| | **1st Renewal Term Estimated Total** | **$381,000** |
| 2nd Renewal Final Term (1-year) | Well Rehabilitation & Investigation (CIP) | $277,000 |
| | Well Mechanical Repairs & Replacements (Operating, R&M) | $64,000 |
| | Unanticipated Emergency Repairs | $50,000 |
| | **2nd Renewal Term Estimated Total** | **$391,000** |
| | **Estimated Total Contract (3-years)** | **$1,418,000** |

**ARTICLE 5. PAYMENT PROCEDURES.**

5.1 Contractor shall submit Applications for Payment in accordance with Article 15 of the General Conditions. Applications for payment will be processed by OWNER as provided in the General Conditions.

5.2 The undersigned, acknowledges that payments made by the Town of Jupiter will be made via electronic funds transfer (EFT) and vendor will provide the Town of Jupiter with the information required to make EFT payments.

5.3 Progress Payments. OWNER shall make progress payments on account of the Contract Price on the basis of CONTRACTOR'S Applications for Payment within 30 days of receipt of each monthly approved application for payment during construction as provided below. All progress payments will be on the basis of the progress of the Work measured by the agreed upon schedule of values provided for in Articles 2 and 15 of the General Conditions.

5.4 Progress payments will be made in an amount equal to 95% of the Work completed, and 95% of materials and equipment not incorporated in the Work but delivered and suitably stored, less in each

case the aggregate of payments previously made. Owner is not obligated to pay for stored materials and may choose to withhold payment until materials are incorporated into the Work.

5.5 Owner, at its discretion may further increase payments to 98% of the work completed upon Substantial Completion. Owner is not obligated to increase payments to 98% of work completed.

5.6 Final Payment. Upon final completion and acceptance of the Work in accordance with Article 15 of the General Conditions, OWNER shall pay the remainder of the Contract Price as provided in said Article 15 of the General Conditions unless liquidated damages are due.

**ARTICLE 6. INTEREST.** Not applicable.

**ARTICLE 7. CONTRACTOR'S REPRESENTATIONS.**

In order to induce OWNER to enter into this Agreement, CONTRACTOR makes the following representations:

7.1 CONTRACTOR has familiarized himself with the nature and extent of the Contract Documents, Work, locality, and with all local conditions and federal, state and local laws, ordinances, rules and regulations that in any manner may affect cost, progress or performance of the Work.

7.2 CONTRACTOR has studied carefully all reports of investigations and tests of subsurface and latent physical conditions at the site or otherwise affecting cost, progress or performance of the Work which were relied upon by ENGINEER in the preparation of the Drawings and Specifications and which have been identified in the Supplementary Conditions.

7.3 CONTRACTOR has made or caused to be made examinations, investigations and tests and studies of such reports and related data in addition to those referred to in Article 7.2 (above) as he deems necessary for the performance of the Work at the Contract Price, within the Contract Time and in accordance with the other terms and conditions of the Contract Documents; and no additional examinations, investigations, tests, reports or similar data are or will be required by CONTRACTOR for such purposes.

7.4 CONTRACTOR has correlated the results of all such observations, examinations, investigations, tests, reports and data with the terms and conditions of the Contract Documents.

7.5 CONTRACTOR has given OWNER written notice of all conflicts, errors or discrepancies that he has discovered in the Contract Documents and the written resolution thereof is acceptable to CONTRACTOR.

**ARTICLE 8. CONTRACT DOCUMENTS.**

8.1 The Contract Documents which comprise the entire agreement between OWNER and CONTRACTOR are attached to this Agreement, made a part hereof and consists of the following:

8.1(a) Index
8.1(b) Table of Contents-Specifications & Appendices
8.1(c) Advertisement for Bids
8.1(d) Instructions to Bidders
8.1(e) Proposal
8.1(f) Contractor Safety Qualifications/Requirements(Including Contractor Safety Qualification Form)
8.1(g) Sworn Statement

8.1(h) Trench Safety
8.1(i) Bid Bond
8.1(j) Notice of Intent to Award
8.1(k) Notice of Award
8.1(l) Agreement (Contract) between OWNER and CONTRACTOR
8.1(m) Payment Bond
8.1(n) Performance Bond
8.1(o) Opinion of Town Attorney
8.1(p) Notice to Proceed
8.1(q) General Conditions (EJCDC Standard General Conditions (2018 Edition), inclusive)
8.1(r) Supplementary Conditions
8.1(s) Any Modifications, including Change Orders, duly delivered after execution of Agreement.
8.1(t) Technical Specifications including Appendices bearing the title: Construction of Surficial Aquifer Well 12A and Surficial Wellfield Rehabilitation Program (W2111)
8.1(u) Drawings bearing the title: Construction of Surficial Aquifer Well 12A and Surficial Wellfield Rehabilitation Program (W2111)

8.2 There are no Contract Documents other than those listed above in this Article 8. The Contract Documents may only be altered, amended or repealed by a modification described in Section 1 of the General Conditions of the Contract.

**ARTICLE 9. MISCELLANEOUS.**

9.1 Terms used in this Agreement which are defined in Article 1 of the General Conditions shall have the meanings indicated in the General Conditions.

9.2 No assignment by a party hereto of any rights under or interests in the Contract Documents will be binding on another party hereto without the written consent of the party sought to be bound; and specifically but without limitation, moneys that may become due and moneys that are due may be assigned without such consent (except to the extent that the effect of this restriction may be limited by law), and unless specifically stated to the contrary in any written consent to an assignment, no assignment will release or discharge the assignor from any duty or responsibility under the Contract Documents.

9.3 OWNER and CONTRACTOR each binds himself, his partners, successors, assigns and legal representatives to the other party hereto, his partners, successors, assigns and legal representatives in respect to all covenants, agreements and obligations contained in the Contract Documents.

9.4 The Inspector General of Palm Beach County has the authority to investigate and audit matters relating to the negotiation and performance of this Contract and in furtherance thereof may demand and obtain records and testimony from the Contractor and its subcontractors and lower tier subcontractors. The Contractor understands and agrees that in addition to other remedies and consequences provided by law, the failure of the Contractor or its subcontractors or lower tier subcontractors to fully cooperate with the Office of Inspector General of Palm Beach County when requested may be deemed by the municipality to be a material breach of this contract justifying its termination. The Office of Inspector General in Palm Beach County is established by Palm Beach County Code, Section 2-421 - 2-440. Failure to cooperate with the Inspector General or interfering with or impeding any investigation shall be in violation of Palm Beach County Code, Section 2-421 – 2-440, and be punished pursuant to Section 125.69, Florida Statutes, in the same manner as a second degree misdemeanor.

9.5 This Agreement is subject to and governed by the laws of the State of Florida, including without limitation Chapter 119, Florida Statutes, which generally makes public all records or other writings made by or received by the parties. The Contractor acknowledges its legal obligation to comply with § 119.0701, Florida Statutes.

9.5(a) A request to inspect or copy public records relating to a public agency's contract for services must be made directly to the public agency. If the public agency does not possess the requested records, the public agency shall immediately notify the contractor of the request, and the contractor must provide the records to the public agency or allow the records to be inspected or copied within a reasonable time.

9.5(b) If a contractor does not comply with the public agency's request for records, the public agency shall enforce the contract provisions in accordance with the contract.

9.5(c) A contractor who fails to provide the public records to the public agency within a reasonable time may be subject to penalties under s. 119.10.

9.5(d) **IF THE CONTRACTOR HAS QUESTIONS REGARDING THE APPLICATION OF CHAPTER 119, FLORIDA STATUTES, TO THE CONTRACTOR'S DUTY TO PROVIDE PUBLIC RECORDS RELATING TO THIS CONTRACT, CONTACT THE CUSTODIAN OF PUBLIC RECORDS AT 561-741-2270, BRITTANYG@JUPITER.FL.US, OR 210 MILITARY TRAIL, JUPITER, FL 33458.**

9.6 The Town of Jupiter encourages and agrees to the successful bidder extending the pricing, terms and conditions of this solicitation or resultant contract to other governmental entities at the discretion of the successful bidder.

9.7 OFFER EXTENDED TO OTHER GOVERNMENT ENTITITES

The Town of Jupiter encourages and agrees to the successful bidder extending the pricing, terms and conditions of this solicitation or resultant contract to other governmental entities at the discretion of the successful bidder.

SPACE INTENTIONALLY LEFT BLANK.
PROCEED TO NEXT PAGE.

IN WITNESS WHEREOF, the parties hereto have signed two (2) copies of this Agreement. At least one counterpart each has been delivered to OWNER and CONTRACTOR. All portions of the Contract Documents have been signed or identified by OWNER and CONTRACTOR.

OWNER

Town of Jupiter
210 Military Trail
Jupiter, FL 33458

By: _____
Todd R. Wodraska, Mayor

(TOWN SEAL)

ATTEST

_____
~~Sally Boylan,~~ Town Clerk
Laura E. Cahill

CONTRACTOR

Centerline Drilling, Inc.
1696 Old Okeechobee Road #3C
West Palm Beach, FL 33409

_____
John Say, Jr., President

(CORPORATE SEAL)

ATTEST

John Say, Jr. President
PRINT NAME AND POSITION

Kim Federer, Office Manager
Kim Federer

# CONSTRUCTION OF SURFICIAL AQUIFER WELL 12A AND SURFICIAL WELLFIELD REHABILITATION PROGRAM (W2111)

## Bid Documents

DECEMBER 2020

| | |
|---|---|
| TODD R. WODRASKA | MAYOR |
| ILAN KAUFFER | VICE-MAYOR |
| RON DELANEY | COUNCILOR |
| JIM KURETSKI | COUNCILOR |
| CAMERON MAY | COUNCILOR |
| MATT BENOIT | TOWN MANAGER |
| DAVID L. BROWN | DIRECTOR OF UTILITIES |

# TABLE OF CONTENTS


Technical Specifications Table of Contents ..... 3
Invitation to Bid ..... 5
Instructions to Bidders ..... 7
Bid Proposal ..... 21
Bid Schedule of Values ..... 2
List of Subcontractors/Suppliers ..... 8
Qualification Requirements ..... 9
Contractor Safety Qualifications/Requirements ..... 17
Contractor Safety Qualification Form ..... 19
Sworn Statement ..... 22
Trench Safety ..... 24
Bid Bond ..... 25
Notice of Intent to Award ..... 27
Notice of Award ..... 28
Agreement (Contract) Between Owner and Contractor ..... 29
Payment Bond ..... 37
Performance Bond ..... 41
Opinion of Town Attorney ..... 45
Notice to Proceed (NTP) – Base Bid, Well Rehabilitation ..... 46
Notice to Proceed (NTP) – Additive Alternate, Well 12A ..... 47
General Conditions to EJCDC Standard General Conditions (2018 Edition)
Supplementary Conditions
Technical Specifications
Figures
Appendices

# Technical Specifications Table of Contents


| SECTION | TITLE |
|---|---|
| **DIVISION 1 – GENERAL REQUIREMENTS** | |
| 01000 | Summary of Work |
| 01025 | Measurement and Payment |
| 01030 | Hurricane Preparedness |
| 01050 | Field Engineering and Surveying |
| 01090 | Reference Standards |
| 01200 | Project Meetings |
| 01300 | Submittals |
| 01400 | Quality Control |
| 01410 | Testing Laboratory Services |
| 01500 | Construction Considerations |
| 01520 | Maintenance of Facilities and Sequence of Construction |
| 01530 | Protection of Existing Facilities |
| 01550 | Site Access and Storage |
| 01570 | Traffic Regulations and Maintenance of Traffic |
| 01600 | Material and Equipment |
| 01700 | Project Closeout |
| 01720 | Project Record Drawings |
| **DIVISION 2 – SITE WORK** | |
| 02000 | Construction Facilities and Temporary Controls |
| 02016 | Existing Utilities and Underground Structures |
| 02270 | Erosion and Sediment Control |
| 02485 | Grassing |
| **DIVISION 3 – WELL CONSTRUCTION** | |
| 03000 | Well Construction Sequence |
| 03100 | Drilling |
| 03200 | Well Casing |
| 03300 | Borehole Geophysical Logging and Video Log |
| 03400 | Annular Grout |
| 03500 | Well Development |
| 03600 | Well Screen and Gravel Pack |

# Technical Specifications Table of Contents (continued)


| SECTION | TITLE |
|---|---|
| **DIVISION 4 – TESTING / CHEMICAL TREATMENTS** | |
| 04000 | Pumping Tests |
| 04200 | Well Facility Disinfection and Water Quality Sampling |
| 04300 | Well Abandonment |
| 04400 | Surficial Production Well Acidization |
| **DIVISION 5 –** | |
| 05000 | Formation Water Disposal System |
| **FIGURES** | |
| Figure 1 | Surficial Aquifer Well 12A Site Location Map |
| Figure 2 | Surficial Aquifer Production Well Open Hole Well Construction Details |
| Figure 3 | Surficial Aquifer Production Well Screened Well Construction Details |
| Figure 4 | Surficial Aquifer Production Well Open Hole Well with Liner Construction Details |
| Figure 5 | Final Wellhead Diagram |
| Figure 6 | Surficial Aquifer Well 12A Formation Water Disposal Map |
| Figure 7 | Surficial Aquifer Well 12A Bollard Detail |
| Figure 8 | Survey and Site Plan – Well 12A |
| **APPENDIX** | |
| Table 1 | Well Construction Details (Surficial Aquifer) |
| Exhibit 1 | Well Location Map |
| Exhibit 2 | Well Location Map Water Treatment Plant Site |
| Exhibit 3 | Well Location Map Central Blvd Tank Site |
| Exhibit 4 | Well Location Map Jupiter Village |
| Exhibit 5 | Well Location Map Indian Creek and Loxahatchee River District Wells |
| Exhibit 6 | Well Location Map Indian Creek/Egret Landing |
| Exhibit 7 | Well Location Map The Heights/Abacoa |
| Exhibit 8 | Well Location Map Abacoa |
| Exhibit 9 | Well Location Map Abacoa/Indian Creek Parkway |
| Exhibit 10 | Contractor Daily Work Log, Airlift and Pump Development Logs, Well Disinfection Report Form |

# TOWN OF JUPITER

## Invitation to Bid

Sealed bids will only be accepted at the Town Clerk's Department, 210 Military Trail, Jupiter, Florida 33458:

**Construction of Surficial Aquifer Well 12A**
**and Surficial Wellfield Rehabilitation Program (W2111)**

Until **2:00 PM**, Local Time, **January 6, 2021** at which time and place all bids received will be publicly opened and read aloud in the Town Council Chambers. Sealed bids shall be submitted to the Town Clerk, on paper, in accordance with the Instruction to Bidders. Bids received after the time and date specified will not be considered. The face of the envelope shall be addressed as follows:

Town Clerk
Town of Jupiter
210 Military Trail
Jupiter, FL 33458
January 6, 2021 at 2:00 PM
Construction of Surficial Aquifer Well 12A and
Surficial Wellfield Rehabilitation Program (W2111)

The nature and scope of this project is:

> Furnish all permits, labor, equipment and materials necessary to perform well maintenance, rehabilitation and/or replacement of Surficial Aquifer production wells for the Town of Jupiter, located in Jupiter, Florida. Well maintenance activities may include but are not limited to removal/reinstallation of wellhead including downhole equipment and well piping; pump and motor inspection, repair and/or replacement of well mechanical components including miscellaneous welding, well disinfection and bacteriological clearance. Well rehabilitation activities may include but are not limited to removal/reinstallation of wellhead components, static and dynamic downhole well video, brushing existing well casing, clean-out open hole, chemical treatment of wells, removal/replacement of gravel pack, well development including air lift development, high velocity jetting with simultaneous air lift development and pump development, well performance pump testing, well disinfection and bacteriological clearance, site restoration, and completion of all required work to the extent the well facility has been successfully rehabilitated, returned to service and accepted by the OWNER based on the intent of the contract documents. Well replacement activities may include but are not limited to abandonment of an existing well and replacement with a well approximately 160' deep with the top 120' being 20" PVC casing and bottom 40' being either 12" open hole, open hole with liner or 12" stainless steel screen including well construction permitting, drill site preparation, pilot hole construction and logging, well drilling and construction, well development, step rate pump testing, video logging, well disinfection and testing, well site restoration and all other incidentals as outlined on the bid documents and all appurtenances necessary to complete the Work based on the intent of the contract documents.

Bid Documents will be available on December 8, 2020 at www.demandstar.com. Bid Documents can be downloaded for $5.00 from Demandstar by signing up for a free agency subscription for the Town of Jupiter at www.demandstar.com. Hard copies of Bid Documents may also be purchased from Demandstar by visiting www.demandstar.com or emailing demandstar@onvia.com.

A virtual pre-bid meeting will be held on December 16, 2020 at 10:00 AM using Zoom. Bidders can access the meeting using the following link: https://zoom.us/j/98551606222?pwd=bElpT3NWVlB3NnY4czZMbi9aNjhKUT09. Alternatively, bidders can join the meeting by visiting https://zoom.us/join, enter the Meeting ID 985 5160 6222 and use the password W2111. Attendance at the pre-bid meeting is not a requirement for bid qualification; however, bidders are encouraged to attend.

Questions concerning the bid will be answered by addendum through Demandstar.com. All questions should be directed to Rebecca Wilder, P.E. in writing, via email rebeccaw@jupiter.fl.us (include Project Name in the subject of the email) or by fax (561) 747-5634. Emails should be delivered with a Read Receipt requested to confirm successful receipt by the Town.

Bidders are not required to be a plan holder of record with Demandstar.com; however, bidders are responsible to obtain complete sets of bidding documents in preparation of submitting a bid

Bid Security in the amount of five percent (5%) of the estimated value for the initial contract term ($646,000) must accompany each bid in accordance with the Instructions to Bidders.

The Town of Jupiter reserves the right to waive any irregularities and to reject any and all bids. The Town of Jupiter is an equal opportunity employer.

By Order of the Town Council,
Town of Jupiter

Sally Boylan, Town Clerk

PUBLISHED: Palm Beach Post

DATE: December 6, 2020

# Instructions to Bidders

## 1. DEFINED TERMS

1.1. Terms used in these Instructions to Bidders which are defined in the Standard General Conditions of the Construction Contract, EJCDC C-700 (2018 Edition) have the meanings assigned to them in the General Conditions. The term "Successful Bidder" means the lowest, qualified, responsible Bidder to whom Owner (on the basis of Owner's evaluation as hereinafter provided) makes an award.

## 2. COPIES OF BIDDING DOCUMENT

2.1. Complete sets of the Bidding Documents in the number and for the non-refundable sum, if any, may be obtained from www.demandstar.com as stated in the Advertisement or Invitation.

2.2. Complete sets of Bidding Documents shall be used in preparing Bids; neither Owner nor Engineer assumes any responsibility for errors or misinterpretations resulting from the use of incomplete sets of Bidding Documents.

2.3. Owner in preparing Bidding Documents available on the above terms do so only for the purpose of obtaining Bids on the Work and do not confer a license or grant for any other use.

## 3. QUALIFICATIONS OF BIDDERS

3.1. To demonstrate qualifications to perform the Work, each Bidder must submit with his/her Bid written evidence of previous experience, references, licensing requirements, evidence of authority to conduct business in the jurisdiction where the project is located, and insurance requirements. Each Bid must contain evidence of the Bidder's qualifications by completion of the Qualification Requirements form in the Front End Documents and Bid Proposal using projects completed by the Bidder that included work meeting the specific description stated on that form as well as evidence of Bidder's qualification to do business in the state where the project is located or convenient to obtain such qualification prior to award of the contract. Bidder shall submit additional information, after the Bid Opening, if requested by Owner, in order for Owner to complete a comprehensive review of the Bid.

3.2. No Bid will be accepted from, nor will any contract be awarded to any person who is in arrears to the Owner, upon any debt or contract, or who is a defaulter, as surety or otherwise, upon any obligation to Owner, or any other governmental agency or entity, or who is deemed irresponsible or unreliable by the Owner.

3.3. No Bid will be accepted from, nor will any contract be awarded to any individual, firm, partnership, corporation or association who is currently in litigation with the Owner, or who is providing testimony in current litigation against the Owner or who has a financial interest in any litigation against the Owner.

3.4. Bidders are not required to be a plan holder of record with Demandstar.com; however, bidders are responsible to obtain complete sets of bidding documents in preparation of submitting a bid.

3.5. All bidders must be a licensed Water Well Contractor in the State of Florida.

3.6. The Contractor of Award is required to hold a Town of Jupiter occupational license at the time work commences.

3.7. Bidders are required to complete and submit with their Bid the Qualification Requirements included in the Front End Bid Documents. Owner will evaluate experience and conduct reference checks as part of the bid evaluation process to assess whether Bidder is qualified and responsible to perform the work presented in the Bid Documents. Bidder must show that he/she has sufficient manpower and equipment to complete the Work, that previous experience is of the type and magnitude presented in the Bid Documents for this contract, that past projects of similar type and magnitude have been completed within budget and on schedule, that past projects have been managed professionally and construction quality and field supervision are professional and of best industry practice.

3.8. Any Bidder who does not meet the qualification requirements of the Bid will not be considered for award.

3.9. Owner reserves the right to request additional experience, reference information, financial information and any other information necessary to perform a comprehensive evaluation of the Contractor and his/her major subcontractors.

3.10. Bidder must perform a minimum of 60% of the Work of the Contract with Bidder's own forces.

**4. EXAMINATION OF BID/CONTRACT DOCUMENTS AND SITE**

4.1. Before submitting a Bid, each Bidder must (a) examine the Contract Documents thoroughly, (b) visit the site to familiarize himself with local conditions that may in any manner affect cost, progress or performance of the Work, (c) familiarize himself with federal, state and local laws, ordinances, rules and regulations that may in any manner affect cost, progress or performance of the Work; and (d) study and carefully correlate Bidder's observations with the Bid/Contract Documents.

4.2. Site is accessible to the Bidder by appointment to conduct such investigations and tests as each Bidder deems necessary for submission of a Bid. Bidder must notify the Town to schedule a date and time for any such investigations and/or tests. Appointments should be scheduled through Rebecca Wilder at (561)741-2635 or rebeccaw@jupiter.fl.us. Bidders are encouraged to attend the non-mandatory pre-bid site visit.

4.3. The lands upon which the Work is to be performed, rights of way for access thereto and other lands designated for use by Contractor in performing the Work are identified in the Supplementary Conditions, General Requirements or Drawings.

4.4. The submission of a Bid will constitute an incontrovertible representation by the Bidder that he has complied with every requirement of this Article 4 and that the Contract Documents are sufficient in scope and detail to indicate and convey understanding of all terms and conditions for performance of the Work.

**5. DETERMINATION OF ESTIMATED QUANTITIES**

5.1. Lump Sum Contracts: The Bidder is responsible for the determination of the quantities for those items constructed within the authorized plan limits or dimensions. The Owner does not assume any responsibility for any incidental information in Bid documents that may be construed as a quantity of work and/or materials.

5.2. Contracts other than Lump Sum: For those items constructed within authorized plan limits or dimensions, use the quantities shown in the plans and in the Bid Form as the basis of the Bid. The Owner will also use these quantities for final payment as limited by the provisions for the field

conditions, use and measurement, the quantities shown in the plans and in the proposal form are approximate and provide only a basis for calculating the bid upon which the Owner will award the Contract. Where items are listed for payment as lump sum units, the Bidder is solely responsible for his own estimates of such quantities and of the work to be performed.

5.3. The Owner reserves the right to make, at any time prior to or during the progress of the work, such increases, decreases, or alterations to the estimated quantities of work to be done or materials to be furnished which materially increases or decreases the cost or time of performance. Such increases, decreases, or alterations shall not constitute a breach of contract, shall not invalidate the contract, nor release the Surety from any liability arising out of this Contract or the Surety bond. The bidder agrees to perform the work, as altered, the same as if it had been a part of the original Contract.

**6. INTERPRETATIONS**

6.1. All questions about the meaning or intent of the Contract Documents shall be submitted to The Town of Jupiter Utilities, Attn: Rebecca J. Wilder, P.E. in writing at 17403 Central Boulevard, Jupiter, FL 33458, Phone (561) 741-2635, Fax (561) 747-5634 or email rebeccaw@jupiter.fl.us. Replies will be issued by Addenda as necessary and delivered to all parties recorded by www.Demandstar.com as having received the Bidding Documents. Questions received less than three days prior to the date for opening of Bids will not be answered. Only questions answered by formal written Addenda will be binding. Oral and other interpretations or clarifications will be without legal effect.

**7. BID SECURITY**

7.1. Bid Security shall be made payable to Owner, in an amount of five percent (5%) of the estimated value for the initial contract term ($646,000) in the form of a certified or bank check or a Bid Bond issued by a Surety meeting the requirements of Paragraph 6.01 of the General Conditions.

7.2. The Bid Security of the Successful Bidder will be retained until such Bidder has executed the Agreement and furnished the required Contract Security, whereupon it will be returned; if the successful Bidder fails to execute and deliver the Agreement and furnish the required Contract Security within 15 days of the Notice of Intent to Award, Owner may annul the Notice of Intent to Award and the Bid Security of that Bidder will be forfeited. The Bid Security of any Bidder whom Owner believes to have a reasonable chance of receiving the award may be retained by Owner until the earlier of the seventh day after the "effective date of the Contract" (which term is defined in the General Conditions) by Owner to Contractor and the required Contract Security is furnished or the one hundred and twenty first day after the Bid opening. Bid Security of other Bidders will be returned within 30 days of the Bid opening.

**8. CONTRACT TIME**

8.1. The Work will have a substantial completion date and a final completion date after the date when the Contract Time commences to run as provided in Paragraph 4.01 of the General Conditions, and as outlined below. There are two substantial and two final completion dates that will apply to this Contract for the base and additive alternate bids, respectively. Further, all work associated with the additive alternate must be completed between May 15 and September 15. A Notice to Proceed (NTP) will be issued for the base bid. Should the Owner elect to proceed with the additive alternate bid, then a separate NTP will be provided for the additive alternate bid. The Contract durations noted below begin on the date of the Notice to Proceed. The work will be completed and ready for substantial and final payment in accordance with Article 15 of the General Conditions and as outlined below.

**Contract Durations for Well Rehabilitation (Base Bid) Scope:**
(Applies to all Work associated with Well Maintenance and Rehabilitation)

| | |
|---|---|
| Substantial Completion: | 365 calendar days from Notice to Proceed |
| Final Completion: | 365 calendar days from Notice to Proceed |

**Contract Durations for Well 12A (Additive Alternate Bid) Scope:**
(Applies to all Work associated with Abandonment of Well 12 and Construction of 12A):

| | |
|---|---|
| Substantial Completion: | 105 calendar days from Notice to Proceed |
| Final Completion: | 135 calendar days from Notice to Proceed |

8.2. The undersigned understands the Contract time starts on the date of Notice to Proceed. The undersigned understands the Contract Time to Substantial Completion includes time for Contractor to obtain permits, submit and obtain shop drawing approvals, order materials, and substantially complete all the Work required of the Contract. Substantial Completion shall include all work required to abandon all existing wells, construct all new wells, testing and clearance of all wells, submission of well completion reports, final well surveys and final acceptance by PBCHD. Final Completion shall include completion of site restoration, punch list items, demobilization from site, record drawings, and other closeout documents.

8.3. Should the Owner elect to proceed with Wells 12 and 12A (bid alternate) then all work associated with this site shall be completed between May 15 and September 15. Failure to complete the work during this time frame and within the contract duration will result in assessment of liquidated damages in the amount of $750/day until the work is substantially complete.

8.4. Owner and Contractor may agree to renew this Contract at the Contract Unit Prices for items in the Base Bid, Well Rehabilitation, for two (2) additional one (1) year terms, for a total Contract period of three (3) consecutive years. Renewal of this Contract is at the Owner's sole discretion and is subject to fiscal appropriation by the Jupiter Town Council in either or both the Town's Community Investment Program (CIP) and fiscal year operating budgets. If the Contract is renewed, it will be done so by written change order to the Contract and are subject to the same terms, conditions, and unit pricing set forth in the initial Contract and any written amendments/change orders signed by both parties (Owner and Contractor). No compensation shall be made for costs associated with renewal of the Contract. Renewals are contingent upon satisfactory performance evaluations by the Owner and subject to the availability of fiscal year funding approved by the Jupiter Town Council. Contractor may elect not to extend the Contract with 90 days written notice to Owner. Owner is not obligated to extend the Contract.

## 9. LIQUIDATED DAMAGES

9.1. Provisions for liquidated damages, if any, are set forth in the Agreement.

## 10. SUBSTITUTE MATERIAL AND EQUIPMENT

10.1. The Contract, if awarded, will be on the basis of material and equipment described in the Drawings or specified in the Specifications without consideration of possible substitute or "or equal" items. Whenever it is indicated in the Drawings or specified in the Specifications that a substitute or "or equal" item of material or equipment may be furnished or used by Contractor if acceptable to Owner, application for such acceptance will not be considered by Owner until after the "effective date of the Agreement". The procedure for submittal of any such application by Contractor and

consideration by Owner is set forth in Article 7 of the General Conditions which may be supplemented in the General Requirements.

**11. SUBCONTRACTORS, ETC.**

11.1. If the Front End Documents or the Supplementary Conditions require the identity of certain Subcontractors and other persons and organizations to be submitted to Owner with the Bid or in advance of the Notice of Intent to Award or Notice of Award, the apparent Successful Bidder, and any other Bidder so requested, shall provide such evidence with the Bid, or shall submit to Owner upon request a list of all Subcontractors and other persons and organizations (including those who are to furnish the principal items of material and equipment) proposed for those portions of the Work as to which such identification is so required. Such list shall be accompanied by an experience statement with pertinent information as to similar projects and other evidence of qualification for each such Subcontractor, person and organization if requested by Owner. If Owner after due investigation has reasonable objection to any proposed Subcontractor, other person or organization, may before giving the Notice of Intent to Award or Notice of Award request the apparent Successful Bidder to submit an acceptable substitute without an increase in the Bid price. If the apparent Successful Bidder declines to make any such substitution, the contract shall not be awarded to such Bidder, but his declining to make any such substitution will not constitute grounds for sacrificing his Bid Security. Any Subcontractor, other person or organization so listed and to whom Owner does not make written objection prior to the giving of the Notice of Intent to Award or Notice of Award will be deemed acceptable to Owner.

11.2. In contracts where the Contract Price is on the basis of Cost of the Work Plus a Fee, the apparent Successful Bidder, prior to the Notice of Intent to Award or Notice of Award, shall identify in writing to Owner those portions of the Work that such Bidder proposes to subcontract and after the Notice of Intent to Award or Notice of Award may only subcontract other portions of the Work with Owner's written consent.

11.3. No Contractor shall be required to employ any Subcontractor, other person or organization against whom he has reasonable objection.

11.4. Contractor must identify all major sub-contractors to be used for the work of this contract in the appropriate space provided on the Bid Form and also provide experience as required in the Qualification Requirements of the Bid Proposal Section for each major subcontractor.

**12. PRICES BID**

12.1. Prices shall be shown in unit amounts, written numerical figures, and extensions (Values) whenever applicable. In the event of discrepancies existing between unit amounts and extension (Value) or totals, the written unit amounts shall govern.

12.2. Discrepancies in the multiplication of units of work and unit prices will be resolved in favor of the unit prices. Discrepancies between the indicated sum of any column of figures and the correct sum thereof will be resolved in favor of the correct sum.

12.3. Discounts extended to Owner shall include, but not be limited to, those discounts normally extended to governmental agencies as well as the private sector.

12.4. Chain discounts are not acceptable and will not be considered in determining an award. Firm prices are to be quoted for the term of the Contract.

12.5. Bidder warrants by virtue of bidding that prices, terms and conditions in the Bid will be firm for acceptance, for a period of one hundred and twenty (120) calendar days from the date of Bid opening unless otherwise stated by the Owner.

12.6. The Bid price shall include all permit fees, royalties, license fees and other costs arising from the use of such design, device or materials in any way involved in the work and all costs of packaging, transporting and delivery to the designed location within the Owner.

12.7. For the purpose of evaluation, the Bidder must indicate any variance or exceptions to the stated specification no matter how slight. Deviations should be explained in detail. Absence of variations and/or corrections will be interpreted to mean that the Bidder meets all the specifications in every respect.

**13. BID FORM**

13.1. The Bid Form is included herein (see Proposal).

13.2. Bid Forms must be completed in ink or typed. The Unit Price and Extended Value of each Bid Item on the form must be provided in numerals. Contractor must bid on all alternates on the bid form. All bid forms must be filled out in their entirety. Figures must be provided for all unit prices and values. Incomplete bid forms will be considered non-responsive.

13.3. Bids by corporations must be executed in the corporate name by the president or a vice president (or other corporate officer accompanied by evidence of authority to sign) and the corporate seal must be affixed and attested by the secretary or an assistant secretary. The corporate address and state of incorporation shall be shown below the signature.

13.4. Bids by partnerships must be executed in the partnership name and signed by a partner, whose title must appear under the signature and the official address of the partnership must be shown below the signature.

13.5. All names must be typed or printed below the signature.

13.6. The Bid shall contain an acknowledgment of receipt of all Addenda (the numbers of which shall be filled in on the Bid Form).

13.7. The address to which communications regarding the Bid are to be directed must be shown.

13.8. If the Bid form contains alternate(s), Bidder must bid on all alternate(s), unless otherwise indicated.

**14. SUBMISSION OF BIDS**

14.1. Two copies of the Bid (one signed original and one electronic pdf on compact disc or flash drive) shall be submitted at the time and place indicated in the Advertisement for Bids or Invitation to Bid and shall be included in an opaque sealed envelope, marked with the Project title and name and address of the Bidder and accompanied by the Bid Security and other required documents. The Bid Form/Schedule of Values and Bid Bond should be clearly marked with a tab for easy identification during the bid opening process. If the Bid is sent through the mail or other delivery system the sealed envelope shall be enclosed in a separate envelope with the notation "BID ENCLOSED" on the face thereof, with the Project name on the front.

**15. MODIFICATION AND WITHDRAWAL OF BIDS**

15.1. Bids may be modified or withdrawn by an appropriate document duly executed (in the manner that a Bid must be executed) and delivered to the place where Bids are to be submitted at any time prior to the opening of Bids.

15.2. If, within twenty four hours after Bids are opened, any Bidder files a duly signed written notice with Owner and promptly thereafter demonstrates to the reasonable satisfaction of Owner that there was a material and substantial mistake in the preparation of his Bid, which Bidder may withdraw his Bid and the Bid Security will be returned. Thereafter, that Bidder may be disqualified from further bidding on the Work. If a notice is filed with Owner after 24 hours then the Contractor will sacrifice his Bid Bond.

**16. OPENING OF BIDS**

16.1. Bids will be opened publicly.

16.2. When Bids are opened publicly they will be read aloud, and an abstract of the amounts of the base Bids and major alternates (if any) will be posted on Demandstar.com and made available after the opening of Bids.

**17. BIDS TO REMAIN OPEN**

17.1. All Bids shall remain open for one hundred and twenty (120) calendar days after the day of the Bid opening, but Owner may, in his sole discretion, release any Bid and return the Bid Security prior to that date.

**18. AWARD OF CONTRACT**

18.1. Owner reserves the right to reject any and all Bids, to waive any and all informalities and to negotiate contract terms with the Successful Bidder, and the right to disregard all nonconforming, non-responsive or conditional Bids. Discrepancies between words and figures, for total bid prices, will be resolved in favor of words. Discrepancies between the indicated sum of any column of figures and the correct sum thereof will be resolved in favor of the correct sum. Discrepancies between the indicated value and the correct value as calculated by the product of the unit price and the estimated quantity will be resolved by using the stated unit price.

18.2. In evaluating Bids, the Owner shall consider the qualifications of the Bidders and whether or not the Bids comply with the prescribed requirements, alternates, and unit processes of the Bid Documents; conduct and consider total cost evaluations to complete rehabilitation of individual wells expected to be rehabilitated during the course of the contract.

18.3. Owner may consider the qualifications and experience of Subcontractors and other persons and organizations (including those who are to furnish the principal items of material or equipment) proposed for those portions of the Work as to which the identity of Subcontractors and other persons and organizations must be submitted as provided in the Supplementary Conditions and Bid Documents. Operating costs, maintenance considerations, performance data and guarantees of materials and equipment may also be considered by Owner.

18.4. Owner may conduct such investigations as he deems necessary to assist in the evaluation of any Bid, and to establish the responsibility, qualifications and financial ability of the Bidders, proposed Subcontractors and other persons and organizations to do the Work in accordance with the Contract Documents to Owner's satisfaction within the prescribed time.

18.5. Owner reserves the right to reject the Bid of any Bidder who does not pass any such evaluation to Owner's satisfaction.

18.6. If the contract is to be awarded, it will be awarded to the lowest, responsive, responsible Bidder, based on the lowest Total Base Bid price, or the lowest Total Base Bid Price plus any combination of Alternate Bid Item(s), as evaluated by the Owner to be in the best interest of the Owner. All Bid pricing shall be submitted on the Bid Proposal Form (Bid Schedule of Values) included in the Front End Bid Documents.

18.7. If the contract is to be awarded, Owner will give the Successful Bidder a Notice of Award within one hundred and twenty (120) days after the day of the Bid opening.

18.8. More than one Bid received for the same work from an individual, firm, partnership, corporation or association under the same or different names will not be considered. If, in the determination of the Owner, there are reasonable grounds for believing that any Bidder is interested in more than one Bid for the same work, or that any collusion exists among the Bidders, this will result in the rejection of the Bids of those Bidders who participated in those Bids. In either case the Owner may deem those Bidders to be a non-responsible or non-qualified Bidder.

**19. PERFORMANCE AND OTHER BONDS**

19.1. Article 6.0 of the General Conditions and the Supplementary Conditions set forth Owner's requirements as to Performance and Payment Bonds. When the Successful Bidder delivers the executed Agreement to Owner, it shall be accompanied by the required Contract Security.

**20. SIGNING OF AGREEMENT**

20.1. When Owner gives a Notice of Award or a Notice of Intent to Award to the Successful Bidder, it will be accompanied by at least two unsigned counterparts of the Agreement and all other Contract Documents. Within fifteen days thereafter Contractor shall sign and deliver at least two counter parts of the Agreement to Owner with all other Contract Documents attached. Within thirty days of the Notice of Award, Owner will deliver all fully signed counterparts to Contractor.

**21. PERMITS**

21.1. Contractor is responsible to obtain all necessary permits (unless otherwise noted) as required by local, State, and Federal regulations as necessary to perform the Work of the Contract in accordance with all regulatory and permit requirements. The Contractor is responsible to perform the Work in accordance with all permit conditions whether Contractor holds the permit or Owner/Town holds the permit. Contractor’s costs associated with obtaining permits shall be included in Bid Pricing.

21.2. Contractor is responsible to obtain the following permits and perform Work in accordance with the permit conditions. Contractor is responsible to obtain South Florida Water Management District Well Construction and Abandonment permits and perform Work in accordance with the permit conditions.

21.3. Contractor is responsible to file a Notice of Commencement with Palm Beach County and provide the Owner with a copy of the recorded Notice of Commencement. Notice of Commencement forms may be obtained from the Town of Jupiter web site.

21.4. Contractor will be responsible to pay for and obtain any other permits required for execution of the work. Contractor will be responsible for treatment of development water prior to disposal, in accordance with the contract documents and local, State and Federal regulations.

21.5. Maintenance of Traffic (MOT) permit from Palm Beach County Traffic Division and/or Town of Jupiter for any pedestrian sidewalk crossings may be required for development water discharge

**22. TAXES**

22.1. The successful Bidder shall pay all applicable sales, consumer use and other similar taxes required by law.

22.2. The Contract contains provisions in the Supplemental Conditions for procurement of materials and equipment incorporated into the project under the Sales and Use Tax Exemption program.

**23. CONTRACT DOCUMENTS**

23.1. It is the intent of the Contract Documents to describe a functionally complete project (or portion thereof) to be constructed in accordance with the Contract Documents. Any work, materials or equipment that may reasonably be inferred from the Contract Documents as being required to produce the intended result shall be supplied whether or not specifically called for. When words which have a well-known technical or trade meaning are used to describe work, materials or equipment, such words shall be interpreted in accordance with that meaning. Reference to standard specifications, manuals or codes of any technical society, organization or association or to the laws or regulations of any governmental authority having jurisdiction over the Project, whether such reference be specific or by implication, shall mean the latest standard specification, manual, code, law or regulation in effect at the time the Work is performed, except as may be otherwise specifically stated herein.

23.2. For the purpose of evaluation, the Bidder must indicate any variance or exceptions to the stated specifications no matter how slight. Deviations should be explained in detail. Absence of variations and/or corrections will be interpreted to mean that the Bidder meets all the specifications in every respect.

23.3. A Contract, if awarded, will be on the basis of material and equipment described in the plans and the technical specifications without consideration of possible substitute or an "or equal" item. Whenever it is indicated that a substitute or an "or equal" item of material or equipment may be furnished or used by the Bidder if acceptable to the Owner, application for such acceptance will not be considered by the Owner until after the date of execution of the Contract. In all cases, the low Bidder shall be determined on the basis of the base bid which shall reflect the costs for the materials and equipment specified. Bidders unable to provide the specified materials and equipment shall be determined unresponsive.

23.4. The apparent silence of the specifications as to any detail, or the apparent omission from the Specifications of a detailed description concerning any point, shall be regarded as meaning that only the best commercial practice is to prevail and that only material and workmanship of the finest quality are to be used. All interpretations of the specifications shall be made on the basis of this statement.

23.5. If before or during the performance of the Work Contractor discovers a conflict, error or discrepancy in the Contract Documents, Contractor immediately shall report same to Project Manager in writing and before proceeding with the Work affected thereby shall obtain a written interpretation or clarification from the Project Manager. Contractor shall take field measurements and verify field conditions and shall carefully compare such field measurements and conditions and other

information known to Contractor with the Contract Documents before commencing any portion of the Work.

23.6. Drawings are intended to show general arrangements, design and extent of Work and are not intended to serve as shop drawings. Specifications are separated into divisions for convenience of reference only and shall not be interpreted as establishing divisions for the Work, trades, subcontracts, or extent of any part of the Work. In the event of a discrepancy between or among the drawings, specifications or other Contract Document provisions, Contractor shall be required to comply with the provision which is the more restrictive or stringent requirement upon the Contractor, as determined by the Project Manager. Unless otherwise specifically mentioned, all anchors, bolts, screws, fittings, fillers, hardware, accessories, trim and other parts required in connection with any portion of the Work to make a complete, serviceable, finished and first quality installations shall be furnished and installed as part of the Work, whether or not called for by the Contract Documents.

23.7. Plans and specifications will be provided free of charge to the successful bidder upon contract award. These plans and specifications will include two copies of the executed contract (one original), two sets of full size plans, two sets of 11”x17” plans, and electronic copies on compact disk. Additional hard copies of plans and specifications may be provided with the cost charged to the successful bidder at the Town’s cost to print and reproduce them. The Owner will not provide anything but complete plan sets. No individual plan sheets or specification sheets will be made.

**24. OPEN END CONTRACT**

24.1. No guarantee is expressed or implied as to the total quantity of commodities/services to be purchased under any open end Contract. Estimated quantities will be used for Bid comparison purposes only. The Owner reserves the right to issue Work Orders as and when required for proposed work for any or all bid items or any combination thereof. Work under this Contract is subject to fiscal appropriation by the Jupiter Town Council in either or both the Town’s Community Investment Program (CIP) and fiscal year operating budgets. Estimated funding budgets anticipated being available for the initial contract term and subsequent renewals are provided in the table below.

24.1.1. The Town’s fiscal calendar runs from October 1st through September 30th.

24.2. The Owner reserves the right to purchase commodities/services specified herein through contracts established by other governmental agencies or through separate procurement actions due to unique or special needs. If an urgent delivery is required within a short period than the delivery time specified in the Contract, and if the seller is unable to comply therewith, the Owner reserves the right to obtain such delivery from others without penalty or prejudice to the Owner or to the Bidder.

24.3. The initial term of the Contract will be one year (365 calendar days) from the date of Notice to Proceed. At the Owner’s sole discretion, Owner may renew the Base Bid Work for Well Rehabilitation of the Contract for two (2) additional one (1) year terms for a total Contract period of three (3) years, in accordance with the Town of Jupiter’s Purchasing Policy and terms of the original Contract. Renewals will be in writing by change order to the Contract and are subject to the same terms, conditions, and unit pricing set forth in the initial Contract and any written amendments/change orders signed by both parties (Owner and Contractor). No compensation shall be made for costs associated with renewal of the Contract. Renewals are contingent upon satisfactory performance evaluations by the Owner and subject to the availability of fiscal year

funding approved by the Jupiter Town Council. Contractor may elect not to extend the Contract with 90 days written notice to Owner. Owner is not obligated to extend the Contract.

Regardless of anything to the contrary, this Contract may be terminated by the Owner at any time and for any reason. Further, the Contractor agrees that it will not be entitled to any claims and/or damages resulting from such termination, including, but not limited to, lost profits, direct or indirect damages, and consequential special or punitive damages.

**Anticipated Estimated Annual Funding**
**Town of Jupiter Utilities**
**Construction of Surficial Aquifer Well 12A and**
**Surficial Wellfield Rehabilitation Program Contract (W2111)**

| Term/Years | Description | Estimated Value |
|---|---|---|
| Initial Term (1-year) | Well Rehabilitation & Investigation (CIP) | $261,000 |
| | Well Mechanical Repairs & Replacements (Operating, R&M) | $60,000 |
| | Unanticipated Emergency Repairs | $50,000 |
| | Construction of Well 12A (CIP) | $275,000 |
| | **Initial Term Estimated Total** | **$646,000** |
| 1st Renewal (1-year) | Well Rehabilitation & Investigation (CIP) | $269,000 |
| | Well Mechanical Repairs & Replacements (Operating, R&M) | $62,000 |
| | Unanticipated Emergency Repairs | $50,000 |
| | **1st Renewal Term Estimated Total** | **$381,000** |
| 2nd Renewal Final Term (1-year) | Well Rehabilitation & Investigation (CIP) | $277,000 |
| | Well Mechanical Repairs & Replacements (Operating, R&M) | $64,000 |
| | Unanticipated Emergency Repairs | $50,000 |
| | **2nd Renewal Term Estimated Total** | **$391,000** |
| | **Estimated Total Contract (3-years)** | **$1,418,000** |

**25. EQUAL OPPORTUNITY**

25.1. The Town of Jupiter recognizes fair and open competition as a basic tenet of public procurement. Contractors doing business with the Owner are prohibited from discriminating on the basis of race, color, creed, national origin, handicap, age or sex.

**26. AUDIT RIGHTS**

26.1. The Owner reserves the right to audit the records of the successful Bidder for the commodities and/or services provided under the Contract at any time during the performance and term of the Contract and for a period of five (5) years after completion and acceptance by the Owner. If required by the Owner, the successful Bidder agrees to submit to an audit by an independent certified public accountant selected by the Owner. The successful Bidder shall allow the Owner to inspect, examine

and review the records of the successful Bidder in relation to this Contract at any and all times during normal business hours during the term of the Contract.

26.2. The Inspector General of Palm Beach County has the authority to investigate and audit matters relating to the negotiation and performance of this Contract and in furtherance thereof may demand and obtain records and testimony from the Contractor and its subcontractors and lower tier subcontractors. The Contractor understands and agrees that in addition to other remedies and consequences provided by law, the failure of the Contractor or its subcontractors or lower tier subcontractors to fully cooperate with the Office of Inspector General of Palm Beach County when requested may be deemed by the municipality to be a material breach of this contract justifying its termination. The Office of Inspector General in Palm Beach County is established by Palm Beach County Code, Section 2-421 - 2-440. Failure to cooperate with the Inspector General or interfering with or impeding any investigation shall be in violation of Palm Beach County Code, Section 2-421 – 2-440, and be punished pursuant to Section 125.69, Florida Statutes, in the same manner as a second degree misdemeanor.

**27. CONFLICT OF INTEREST**

27.1. The award hereunder is subject to the provisions of Chapter 112, Florida Statutes. Bidders must disclose with their Bid the name of any officer, director, partner, proprietor, associate or agent who is also a public officer or employee of the Owner or any of its agencies. Further, all Bidders must disclose the name of any public officer or employee of the Owner who owns, directly or indirectly, an interest of five percent (5%) or more in the Bidder's firm or any of its branches or affiliate companies.

**28. OCCUPATIONAL HEALTH & SAFETY**

28.1. In compliance with Chapter 442, Florida Statutes, any toxic substance listed in Section 38F-41.03 of the Florida Administrative Code delivered as a result of this Bid must be accompanied by a Material Safety Data Sheet ("MSDS") which may be obtained from the manufacturer. The MSDS must include the following information:

28.1.1. The chemical name and the common name of the toxic substance.

28.1.2. The hazards or other risks in the use of the toxic substance including: a) The potential for fire, explosion, corrosively and reactivity; b) The known acute and chronic health effects of risk from exposure including the medical conditions which are generally recognized as being aggravated by exposure to the toxic substance; and c) The primary routes of entry and symptoms of over exposure.

28.1.3. The proper precautions, handling practices, necessary personal protection equipment and other safety precautions in the use of or exposure to the toxic substances, including appropriate emergency treatment in case of exposure.

28.1.4. The emergency procedure for spills, fire, disposal and first aid.

28.1.5. A description in lay terms of the known specific potential health risks posed by the toxic substance intended to alert any person reading this information.

28.1.6. The year and month, if available, that the information was compiled and the name, address, and emergency telephone number of the manufacturer responsible for preparing the information.

28.2. Bidders are required to complete and submit with their bid the Contractor Safety Qualifications Form included in the Front End Documents.

28.3. Contractor of Award and sub-contractors will be required to perform the Work of the Contract in accordance with the Environmental Protection Agency Risk Management Program (40 CRF 68.87) and the Occupational Safety and Health Administration's Process Safety Management Program (29 CRF 1910.119 (h)).

28.4. Contractor of Award, sub-contractor, and all persons performing work at the water treatment plant site under this contract shall be required to attend a mandatory safety orientation hosted by the Jupiter Water Treatment Plant staff. Contractor will be required to coordinate safety orientations with Plant staff at least one week prior to the date in which the work of each trade will be performed. It is requested that the Contractor schedule classes with subcontractor and Town Staff so as to minimize the number of times the class must be presented. Any worker on site who is found not having attended the mandatory safety training will be asked to the leave the site until such safety requirement is met. It is the Contractor's responsibility to make sure all persons working on this project attends the water plant safety orientation.

28.5. Various local and state governments have instituted requirements for their populations that exceeds the CDC guidelines. One example includes a requirement (not a suggestion) to wear face coverings in public. Contractors must observe state and local requirements as needed as we institute a phased reopening throughout the nation. Because local/state guidelines will continue to evolve and may apply differently by different jurisdictions at different times, the Contractor must be prepared to provide PPE as needed in all jurisdictions even if their requirements exceed that of the CDC.

**29. SPECIAL LEGAL REQUIREMENTS**

29.1. PUBLIC RECORDS

29.1.1. This Agreement is subject to and governed by the laws of the State of Florida, including without limitation Chapter 119, Florida Statutes, which generally makes public all records or other writings made by or received by the parties. The Contractor acknowledges its legal obligation to comply with § 119.0701, Florida Statutes.

29.1.2. A request to inspect or copy public records relating to a public agency's contract for services must be made directly to the public agency. If the public agency does not possess the requested records, the public agency shall immediately notify the contractor of the request, and the contractor must provide the records to the public agency or allow the records to be inspected or copied within a reasonable time.

29.1.3. If a contractor does not comply with the public agency's request for records, the public agency shall enforce the contract provisions in accordance with the contract.

29.1.4. A contractor who fails to provide the public records to the public agency within a reasonable time may be subject to penalties under s. 119.10.

29.1.5. **IF THE CONTRACTOR HAS QUESTIONS REGARDING THE APPLICATION OF CHAPTER 119, FLORIDA STATUTES, TO THE CONTRACTOR'S DUTY TO PROVIDE PUBLIC RECORDS RELATING TO THIS CONTRACT, CONTACT THE CUSTODIAN OF PUBLIC RECORDS AT 561-741-2270,**

**BRITTANYG@JUPITER.FL.US, OR 210 MILITARY TRAIL, JUPITER, FL 33458.**

29.2. OFFER EXTENDED TO OTHER GOVERNMENTAL ENTITIES

29.2.1. The Town of Jupiter encourages and agrees to the successful bidder extending the pricing, terms and conditions of this solicitation or resultant contract to other governmental entities at the discretion of the successful bidder.

29.3. CONE OF SILENCE, Sec. 2-355. Cone of Silence

29.3.1. Cone of silence means a prohibition on any communication, except for written correspondence, regarding a particular request for proposal, request for qualification, bid, or any other competitive solicitation between:

29.3.1.1. Any person or person's representative seeking an award from such competitive solicitation; and

29.3.1.2. Any county commissioner or commissioner's staff, any member of a local governing body or the member's staff, a mayor or chief executive officer that is not a member of a local governing body or the mayor or chief executive officer's staff, or any employee authorized to act on behalf of the commission or local governing body to award a particular contract.

29.3.2. For the purposes of this section, a person's representative shall include but not be limited to the person's employee, partner, officer, director, consultant, lobbyist, or any actual or potential subcontractor or consultant of the person.

29.3.3. The cone of silence shall be in effect as of the deadline to submit the proposal, bid, or other response to a competitive solicitation. The cone of silence applies to any person or person's representative who responds to a particular request for proposal, request for qualification, bid, or any other competitive solicitation, and shall remain in effect until such response is either rejected by the county or municipality as applicable or withdrawn by the person or person's representative. Each request for proposal, request for qualification, bid or any other competitive solicitation shall provide notice of cone of silence requirements and refer to this article.

29.3.4. The provisions of this article shall not apply to oral communications at any public proceeding, including pre-bid conferences, oral presentations before selection committees, Contract negotiations during any public meeting, presentations made to the board or local municipal governing body as applicable, and protest hearings. Further, the cone of silence shall not apply to contract negotiations between any employee and the intended awardee, any dispute resolution process following the filing of a protest between the person filing the protest and any employee, or any written correspondence at any time with any employee, county commissioner, member of a local municipal governing body, mayor or chief executive officer that is not a member of the local municipal governing body, or advisory board member or selection committee member, unless specifically prohibited by the applicable competitive solicitation process.

29.3.5. The cone of silence shall not apply to any purchases made in an amount less than the competitive bid threshold set forth in the county purchasing ordinance (County Code, chapter 2, article III, division 2, part A, section 2-51 et seq.) or municipal ordinance as applicable.

29.3.6. The cone of silence shall terminate at the time the board, local municipal governing body, or a county or municipal department authorized to act on behalf of the board or local municipal governing body as applicable, awards or approves a contract, rejects all bids or responses, or otherwise takes action which ends the solicitation process.

29.3.7. Any contract entered into in violation of the cone of silence provisions in this section shall render the transaction voidable.

THIS SPACE IS INTENTIONALLY LEFT BLANK.

PROCEED TO NEXT PAGE.

# Bid Proposal

**Bidding Company Name:**_____

Town of Jupiter Utilities
210 Military Trail
Jupiter, FL 33458

Gentlemen:

The undersigned, as Bidder, hereby declares that the only Persons, company, or parties interested in the Proposal or the Contract to be entered into, as principals, are named herein; and that this Proposal is made without connection with any other person, company, or parties making a Bid or Proposal; and that it is in all respects fair and in good faith without collusion or fraud.

That the Bidder has carefully and to his full satisfaction examined the attached Instructions to Bidders, General Conditions, Supplementary Conditions, detailed Specifications, and Form of Contract and Bond, together with the accompanying plans, and that Bidder has read all addenda issued prior to the opening of Bids; and that Bidder has fully examined the site and the project documents and hereby agrees to furnish, unless otherwise provided, all implements, machinery, equipment, transportation, tools, materials, supplies, labor and other things necessary to the prosecution and completion of the work, to wit:

> Furnish all permits, labor, equipment and materials necessary to perform well maintenance, rehabilitation and/or replacement of Surficial Aquifer production wells for the Town of Jupiter, located in Jupiter, Florida. Well maintenance activities may include but are not limited to removal/reinstallation of wellhead including downhole equipment and well piping; pump and motor inspection, repair and/or replacement of well mechanical components including miscellaneous welding, well disinfection and bacteriological clearance. Well rehabilitation activities may include but are not limited to removal/reinstallation of wellhead components, static and dynamic downhole well video, brushing existing well casing, clean-out open hole, chemical treatment of wells, removal/replacement of gravel pack, well development including air lift development, high velocity jetting with simultaneous air lift development and pump development, well performance pump testing, well disinfection and bacteriological clearance, site restoration, and completion of all required work to the extent the well facility has been successfully rehabilitated, returned to service and accepted by the OWNER based on the intent of the contract documents. Well replacement activities may include but are not limited to abandonment of an existing well and replacement with a well approximately 160’ deep with the top 120’ being 20" PVC casing and bottom 40’ being either 12” open hole, open hole with liner or 12” stainless steel screen including well construction permitting, drill site preparation, pilot hole construction and logging, well drilling and construction, well development, step rate pump testing, video logging, well disinfection and testing, well site restoration and all other incidentals as outlined on the bid documents and all appurtenances necessary to complete the Work based on the intent of the contract documents.

It is proposed that the project herein described shall be constructed for the Unit Prices as follows, all in accordance with the requirements and provisions of the Contract Documents.

# Bid Schedule of Values
# Construction of Surficial Aquifer Well 12A and
# Surficial Wellfield Rehabilitation Program (W2111)

*The following schedule of bid items has been developed to allow the Town to equitably evaluate bids. Individual bid item unit costs will be used to establish the total cost of each scope of work developed to maintain, rehabilitate, and/or replace wells; work orders will be issued as authorization to proceed with the various scopes of work to be completed under this Contract. Town does not guarantee that estimated quantities shown will be utilized in full, or at all. The Town may utilize some or all of these bid items for each scope of work, as the Town deems necessary.*

| Item No. | Item Description | Unit | Estimated Quantity | Unit Price | Extended Value |
|---|---|---|---|---|---|
| **BASE BID ITEMS, GENERAL** | | | | | |
| 1 | Bonds and Insurance (Maximum Allowable 3%) | LS | 1 | $_____ | $_____ |
| 2 | Indemnification | LS | 1 | $100.00_____ | $_____ **100.00** |
| 3 | General Conditions ____% of Sub-Total Base Bid, Well Rehabilitation Price (Items 5-47)* (Maximum Allowable 8%) | LS | 1 | $_____ | $_____ |
| 4 | Mobilization/Demobilization ____% of Sub-Total Base Bid, Well Rehabilitation Price (Items 5-47)* (Maximum Allowable 8%) | LS | 1 | $_____ | $_____ |
| | | **Sub-Total Base Bid, General (Item Nos. 1-4)** | | | **$**_____ |
| **BASE BID ITEMS, WELL REHABILITATION** | | | | | |
| 5 | Remove and Re-Install Pump Discharge Apparatus | Each | 6 | $_____ | $_____ |
| 6 | Brushing and Swabbing of Well Screen, Riser or Casing | Each | 1 | $_____ | $_____ |
| 7 | Surfactant Treatment | Gallon | 500 | $_____ | $_____ |
| 8 | Surficial Aquifer Well Acidization Setup | LS | 2 | $_____ | $_____ |
| 9 | Well Acidization with 32% HCl | Gallon | 2,000 | $_____ | $_____ |
| 10 | Remove Existing Screen and Riser | Each | 1 | $_____ | $_____ |
| 11 | Clean Out Open Hole to Total Depth | Foot | 50 | $_____ | $_____ |

***Bidder shall indicate the percentage (%) in the blank provided on the Bid Form for Pay Items 3 and 4. Refer to Section 01025 Measurement and Payment of the technical specifications for additional detail for all Pay Items**

## Bid Schedule of Values (Continued)
## Construction of Surficial Aquifer Well 12A and
## Surficial Wellfield Rehabilitation Program (W2111)

| Item No. | Item Description | Unit | Estimated Quantity | Unit Price | Extended Value |
|---|---|---|---|---|---|
| 12 | Drill 6-Inch Diameter Pilot Hole to 200-feet, Geophysical Logging and Abandonment. | LS | 1 | $_____ | $_____ |
| 13 | Furnish, Install, and Grout In Place 30-inch Steel Surface Casing to 50-feet | FT | 50 | $_____ | $_____ |
| 14 | Drill Nominal 28-inch Diameter Borehole Using Mud Rotary Method | FT | 70 | $_____ | $_____ |
| 15 | Furnish and Install 20-inch Diameter Schedule 40 PVC Well Casing | FT | 120 | $_____ | $_____ |
| 16 | Cement Grout 20-inch Diameter Schedule 40 PVC Well Casing In Place | 94 lb. sack | 250 | $_____ | $_____ |
| 17 | Drill Nominal 12-Inch Diameter Borehole to 160-feet Using Reverse Air Method | FT | 40 | $_____ | $_____ |
| 18 | Furnish and Install 6-inch Diameter 316 Stainless Steel Screen and Riser. | Foot | 100 | $_____ | $_____ |
| 19 | Furnish and Install 12-inch Diameter 316 Stainless Steel Screen | Foot | 40 | $_____ | $_____ |
| 20 | Furnish and Install 12-inch Diameter SDR17 Certa-Lok PVC Riser Casing | Foot | 120 | $_____ | $_____ |
| 21 | Furnish and Install Gravel Pack for Well Screen | Cubic Foot | 200 | $_____ | $_____ |
| 22 | Drill nominal 19-inch Diameter Borehole Using Reverse Air Method | Foot | 40 | $_____ | $_____ |
| 23 | Furnish and Install Gravel Back Plug for 12-inch Diameter Liner Placement | Cubic Foot | 200 | $_____ | $_____ |
| 24 | Furnish and Install 12-inch Diameter Schedule 40 PVC Liner | Foot | 50 | $_____ | $_____ |
| 25 | Cement Grout | 94 lb. Sk | 100 | $_____ | $_____ |

## Bid Schedule of Values (Continued)
## Construction of Surficial Aquifer Well 12A and
## Surficial Wellfield Rehabilitation Program (W2111)

| Item No. | Item Description | Unit | Estimated Quantity | Unit Price | Extended Value |
|---|---|---|---|---|---|
| 26 | Drill Out Gravel Back-Plug | Foot | 75 | $_____ | $_____ |
| 27 | Airlift Development | Hour | 200 | $_____ | $_____ |
| 28 | Jetting with Simultaneous Airlift Development | Hour | 50 | $_____ | $_____ |
| 29 | Pump Development | Hour | 200 | $_____ | $_____ |
| 30 | Step Rate Test | Hour | 10 | $_____ | $_____ |
| 31 | Well Disinfection | Each | 6 | $_____ | $_____ |
| 32 | Bacteriological Sampling and Testing | Each | 10 | $_____ | $_____ |
| 33 | Remove and Reinstall Transfer Pump/HSP Including Disinfection | Each | 1 | $_____ | $_____ |
| 34 | Certified Welding Services | Hour | 20 | $_____ | $_____ |
| 35 | Flow Meter Calibration Services | Each | 2 | $_____ | $_____ |
| 36 | Major Site Restoration | Each | 2 | $_____ | $_____ |
| 37 | Minor Site Restoration | Each | 3 | $_____ | $_____ |
| 38 | Downhole Video | Each | 6 | $_____ | $_____ |
| 39 | Extra work by Drilling Crew (Foreman and one Crew Member) with Equipment | Hour | 10 | $_____ | $_____ |
| 40 | Extra work by Drilling Crew (Foreman and one Crew Member) without Equipment | Hour | 40 | $_____ | $_____ |
| 41 | Standby Time, Rig and Crew onsite | Hour | 10 | $_____ | $_____ |
| 42 | Standby Time, Rig and Crew offsite | Hour | 10 | $_____ | $_____ |
| 43 | Pump/Motor Retrieval | Hour | 10 | $_____ | $_____ |

# Bid Schedule of Values (Continued)
# Construction of Surficial Aquifer Well 12A and
# Surficial Wellfield Rehabilitation Program (W2111)

| Item No. | Item Description | Unit | Estimated Quantity | Unit Price | Extended Value |
|---|---|---|---|---|---|
| 44 | Unidentified Parts Allowance | LS | 1 | $75,000.00 | **$ 75,000.00** |
| 45 | Disassembly and Inspection of Pump | Each | 6 | $ | $ |
| 46 | Pump/Motor Maintenance in Shop | Hour | 25 | $ | $ |
| 47 | Licensed Electrician Services | Hour | 10 | $ | $ |
| | **Sub-Total Base Bid, Well Rehabilitation Price: (Item Nos. 5-47) =** | | | | **$** |
| | **Total Base Bid Price: (Item Nos. 1-47) =** | | | | **$** |

| Item No. | Item Description | Unit | Estimated Quantity | Unit Price | Extended Value |
|---|---|---|---|---|---|
| **ADDITIVE ALTERNATE BID ITEMS, WELL 12A CONSTRUCTION (OPEN HOLE SCENARIO)** | | | | | |
| 48 | Mobilization/Demobilization (Well 12A) (Not to Exceed 10% of Well 12A Construction Cost) | LS | 1 | $ | $ |
| 49 | Drill 6-Inch Diameter Pilot Hole to 200-feet, Geophysical Logging and Abandonment. | LS | 1 | $ | $ |
| 50 | Furnish, Install, and Grout In Place 30-inch Steel Surface Casing to 50-feet | FT | 50 | $ | $ |
| 51 | Drill Nominal 28-inch Diameter Borehole Using Mud Rotary Method | FT | 70 | $ | $ |
| 52 | Furnish and Install 20-inch Diameter Schedule 40 PVC Well Casing | FT | 120 | $ | $ |
| 53 | Cement Grout 20-inch Diameter Schedule 40 PVC Well Casing In Place | 94 lb. sack | 250 | $ | $ |
| 54 | Drill Nominal 12-Inch Diameter Borehole to 160-feet Using Reverse Air Method | FT | 40 | $ | $ |

## Bid Schedule of Values (Continued)
## Construction of Surficial Aquifer Well 12A and
## Surficial Wellfield Rehabilitation Program (W2111)

| Item No. | Item Description | Unit | Estimated Quantity | Unit Price | Extended Value |
|---|---|---|---|---|---|
| 55 | Formation Water Disposal System (Well 12A) | Each | 1 | $_____ | $_____ |
| 56 | Airlift Development | Hour | 200 | $_____ | $_____ |
| 57 | Pump Development | Hour | 200 | $_____ | $_____ |
| 58 | Step Rate Test | Hour | 10 | $_____ | $_____ |
| 59 | Downhole Video | Each | 1 | $_____ | $_____ |
| 60 | Well Disinfection and Bacteriological Testing (Well 12A) | LS | 1 | $_____ | $_____ |
| 61 | Well Water Quality Sampling (Well 12A) | LS | 1 | $_____ | $_____ |
| 62 | Well Abandonment (Well 12) | LS | 1 | $_____ | $_____ |
| 63 | Final Temporary Wellhead (Well 12A) | LS | 1 | $_____ | $_____ |
| 64 | Site Restoration (Well 12A) | Each | 1 | $_____ | $_____ |

**TOTAL ADDITIVE ALTERNATE, WELL 12A (OPEN HOLE SCENARIO) BID PRICE: (ITEM NOS. 48-64) = $_____**

***Bidder shall indicate the percentage (%) in the blank provided on the Bid Form for Pay Items 3 and 4. Refer to Section 01025 Measurement and Payment of the technical specifications for additional detail for all Pay Items**

THIS SPACE IS INTENTIONALLY LEFT BLANK.

PROCEED TO NEXT PAGE.

## Bid Schedule of Values (Continued)
## Construction of Surficial Aquifer Well 12A and
## Surficial Wellfield Rehabilitation Program (W2111)

**BID PRICE SUMMARY**

**Total Base Bid, Well Rehabilitation Price: (Item Nos. 1-47) = $_____**

**Total Base Bid, Well Rehabilitation Price (Items 1-47) in Words: _____**

**_____**

**Total Additive Alternate Bid Well 12A (Open Hole Scenario**) Price: (Item Nos. 48-64) = $_____**

**Total Additive Alternate Bid Well 12A (Open Hole Scenario**) Price: (Item Nos. 48-64) in Words: _____**

**_____**

### MUST CHECK ONE OF THE FOLLOWING:

BACTERIOLOGICAL CLEARANCE LABORATORY

- ☐ Approved State Department of Health Laboratory (DOH Certified)
- ☐ Town of Jupiter Utilities Laboratory (DOH Certified) - Use of Town of Jupiter Water System Lab will result in no charge for Item No. 32 on the Schedule of Values.

Please note that Bidder is responsible to utilize DOH Certified laboratory for work associated with Bid Item Nos. 60 & 61

# List of Subcontractors/Suppliers

The Bidder shall list below the name and the location of the place of business of each subcontractor who will perform work or labor or render service to the prime contractor in or about the construction of the Work or improvement, or a subcontractor licensed by the State who, under subcontract to the prime contractor, specially fabricates and installs a portion of the Work or improvement according to detailed drawings contained in the plans and specifications, in an amount in excess of two percent (2%) of the prime contractor's total bid. Failure to comply with this requirement may render the Bid non-responsive and may cause its rejection. If Prime Contractor will self-perform any of the work listed below it shall be indicated as self-perform under Subcontractor License Number.

| **Work to be Performed** | **Subcontractor License Number** | **Percent of Total Contract** | **Subcontractor/Supplier Name & Address** |
|---|---|---|---|
| | | | |
| | | | |
| | | | |
| | | | |
| | | | |
| | | | |
| | | | |
| | | | |

Note: Provide licenses, certifications, experience, and qualification forms for those subcontractors listed above. Attach additional pages as needed.

# Qualification Requirements

(Complete these pages in their entirety and include with Bid. Attach copies of applicable Licenses)

THE UNDERSIGNED GUARANTEES THE TRUTH AND ACCURANCY OF ALL STATEMENTS AND ANSWERS HEREIN CONTAINED:

A. Any information for which OWNER cannot corroborate is grounds for rejection of Bid. (Use additional sheets as needed to provide the required information.)

1. State the numbers of years your organization has been doing business in the State of Florida:

   _____

2. State the location of the office from which this Contract will be managed.

   _____

3. State the number of employees available to complete the work contemplated by this contract.

   _____

4. State Name and years of experience of Bidder's Project Manager to be assigned to this Project. Provide the proposed Project Manager's experience for at least four (4) similar projects within the past five (5) years. Provide information as to the role of the individual for the stated previous projects and his/her intended role for this Contract. Provide reference contact information for Project Manager on previous projects listed. If in Owner's opinion the proposed Project Manager is not qualified to act at Project Manager for this Contract based on the information presented by the Bidder and Owner's verification of references, Bidder shall propose another Project Manager. Owner and Bidder shall agree on the Project Manager for this Contract before the Contract is awarded.

   Project Manager's: Name: _____

   Years of Experience in this type of work: _____

   Years of Experience as a Project Manager in this type of work: _____

5. Only Bidders who are qualified and have completed at least four (4) similar projects over the last five (5) years or equivalent experience as determined by the Town to be in the Town's sole best interest will be considered for award.

   NOTE: In order to be deemed acceptable for the purpose of determining Bidder Qualification, similar projects shall be listed below and have all information completed (blanks correctly filled in) including contact names and telephone numbers of both the Owner and Engineer.

   Names and experience of Major Subcontractors (proposed to perform 2% or more of the work of this contract) to be used on this project shall also be included in the Bid Proposal Package. Copy this form and attach additional pages as needed. Provide Four (4) similar projects for major subcontractors.

## Qualification Requirements (Continued)

**As Bidder, we certify the following:**

(1) NAME & LOCATION OF PROJECT:_____

_____

VALUE AND SCOPE OF WORK: _____

_____

_____

BIDDER WAS: [ ] PRIME CONTRACTOR [ ] PRIME CONTRACTOR (CHECK ONE)

NAME OF BIDDER'S PROJECT MANAGER: _____

DATE OF NOTICE TO PROCEED/CONTRACT START: _____

OWNER OF PROJECT: _____

OWNER CONTACT NAME: _____

OWNER PHONE NUMBER: _____

OWNER EMAIL: _____

OWNER ADDRESS:

_____

_____

_____

ADDITIONAL INFORMATION: _____

_____

_____

SPACE INTENTIONALLY LEFT BLANK.
PROCEED TO NEXT PAGE.

## Qualification Requirements (Continued)

(2) NAME & LOCATION OF PROJECT:_____

_____

VALUE AND SCOPE OF WORK: _____

_____

_____

BIDDER WAS: [ ] PRIME CONTRACTOR [ ] PRIME CONTRACTOR (CHECK ONE)

NAME OF BIDDER'S PROJECT MANAGER: _____

DATE OF NOTICE TO PROCEED/CONTRACT START: _____

OWNER OF PROJECT: _____

OWNER CONTACT NAME: _____

OWNER PHONE NUMBER: _____

OWNER EMAIL: _____

OWNER ADDRESS:

_____

_____

_____

ADDITIONAL INFORMATION: _____

_____

_____

SPACE INTENTIONALLY LEFT BLANK.
PROCEED TO NEXT PAGE.

## Qualification Requirements (Continued)

(3) NAME & LOCATION OF PROJECT:_____

_____

VALUE AND SCOPE OF WORK: _____

_____

_____

BIDDER WAS: [ ] PRIME CONTRACTOR [ ] PRIME CONTRACTOR (CHECK ONE)

NAME OF BIDDER'S PROJECT MANAGER: _____

DATE OF NOTICE TO PROCEED/CONTRACT START: _____

OWNER OF PROJECT: _____

OWNER CONTACT NAME: _____

OWNER PHONE NUMBER: _____

OWNER EMAIL: _____

OWNER ADDRESS:

_____

_____

_____

ADDITIONAL INFORMATION: _____

_____

_____

SPACE INTENTIONALLY LEFT BLANK.
PROCEED TO NEXT PAGE.

## Qualification Requirements (Continued)

(4) NAME & LOCATION OF PROJECT:_____

_____

VALUE AND SCOPE OF WORK: _____

_____

_____

BIDDER WAS: [ ] PRIME CONTRACTOR [ ] PRIME CONTRACTOR (CHECK ONE)

NAME OF BIDDER'S PROJECT MANAGER: _____

DATE OF NOTICE TO PROCEED/CONTRACT START: _____

OWNER OF PROJECT: _____

OWNER CONTACT NAME: _____

OWNER PHONE NUMBER: _____

OWNER EMAIL: _____

OWNER ADDRESS:

_____

_____

_____

ADDITIONAL INFORMATION: _____

_____

_____

SPACE INTENTIONALLY LEFT BLANK.
PROCEED TO NEXT PAGE.

# Proposal (Continued)

If awarded the Contract, the undersigned agrees to execute the attached Agreement/Contract within fifteen (15) calendar days from the date set forth in the Notice of Intent to Award or Notice of Award, which ever one is received first, and to fully complete all necessary work within the time limits specified below after date of written Notice to Proceed, with such extensions of time as are provided for in the General Conditions.

**Contract Durations for Well Rehabilitation (Base Bid) Scope:**
(Applies to all Work associated with Well Maintenance and Rehabilitation)

| | |
|---|---|
| Substantial Completion: | 365 calendar days from Notice to Proceed |
| Final Completion: | 365 calendar days from Notice to Proceed |

**Contract Durations for Well 12A (Additive Alternate Bid) Scope:**
(Applies to all Work associated with Abandonment of Well 12 and Construction of 12A):

| | |
|---|---|
| Substantial Completion: | 105 calendar days from Notice to Proceed |
| Final Completion: | 135 calendar days from Notice to Proceed |

The undersigned understands the Contract time starts on the date of Notice to Proceed. The undersigned understands the Contract time includes time for Contractor to obtain permits, submit and obtain shop drawing approvals, order materials, receive deliveries, complete all Work required of the Contract, and to close out the Contract.

There is enclosed a bid guarantee consisting of five percent (5%) of the estimated value for the initial contract term ($646,000).

The undersigned agrees that all bid documents issued for this project, including addenda, have been reviewed and site visits performed, as necessary to provide a comprehensive bid. The undersigned acknowledges receipt of _____ (insert number) Addenda for this project.

The undersigned furthermore agrees that, in case of failure on undersigned's part to sign said contract and provide required bonds, power of attorney's, and insurance within (15) days after receipt of a Notice of Intent to Award or a Notice of Award, whichever comes first, the check, bond, or other security accompanying undersigned's Bid and the money payable thereon, shall become the property of the Town, by forfeit as agreed and liquidated damages; otherwise the check or bond accompanying undersigned's Bid shall be returned to the undersigned.

The undersigned acknowledges that payments made by the Town of Jupiter will be made via electronic funds transfers (EFT) and vendor will provide the Town of Jupiter with the information required to make EFT payments.

The undersigned, if awarded the contract, agrees to furnish at time of signing the contract, a payment bond and a performance bond, each in the amount of 100% of the contract value as set forth in "Instructions to Bidders".

The undersigned is aware that the Inspector General of Palm Beach County has the authority to investigate and audit matters relating to the negotiation and performance of this contract and in furtherance thereof may demand and obtain records and testimony from the contractor and its subcontractors and lower tier subcontractors. The contractor understands and agrees that in addition to other remedies and consequences

provided by law, the failure of the contractor or its subcontractors or lower tier subcontractors to fully cooperate with the Inspector General when requested may be deemed by the municipality to be a material breach of this contract justifying its termination.

The undersigned states that this bid proposal is the only proposal for this project in which he is interested and certifies that all of the information provided in this bid proposal is true and correct.

SUBMITTAL DATE _____

FIRM NAME _____

BUSINESS ADDRESS _____

BUSINESS TELEPHONE _____

FIRM'S FEIN _____

SIGNATURE OF RESPONSIBLE OFFICIAL _____

PRINT NAME AND TITLE _____

EMAIL ADDRESS OF RESPONSIBLE OFFICIAL _____

STATE OF INCORPORATION _____

FULL NAMES AND ADDRESSES OF PERSONS OR PARTIES INTERESTED IN THE FOREGOING BID, AS PRINCIPALS:

_____

_____

SPACE INTENTIONALLY LEFT BLANK.
PROCEED TO NEXT PAGE.

# Contractor Safety Qualifications/Requirements

## 1. APPLICABILITY

Any contractors performing maintenance, repair, turnaround, major renovations, or specialty work on or adjacent to the hazardous chemical process at the Jupiter Water Treatment plant is subject to the contractor safety requirements of the Environmental Protection Agency Risk Management Program (40 CRF 68.87) and the Occupational Safety and Health Administration's Process Safety Management Program (29 CRF 1910.119(h)).

**CONTRACTOR SHALL SUBMIT A COMPLETED COPY OF THE ATTACHED "CONTRACTOR SAFETY QUALIFICATION FORM" WITH THEIR BID. FAILURE TO INCLUDE THIS FORM WITH THE BID IS GROUNDS FOR DISQUALIFICATION.**

## 2. OWNER RESPONSIBILITY

(A) Selecting a Contractor:

1. When selecting a contractor, obtain and evaluate information regarding the contractor's safety program.

(B) Informing a Contractor:

1. Inform the contractor of the known potential fire, explosion, or toxic release hazards related to the contractor's work and regulated process.

2. Explain to the contractor the applicable provisions of the facilities emergency response program (i.e. alarms, evacuation routes, etc.)

3. Inform the contractor of the facility's safe work practices of operations such as:
    - Confined space entry
    - Equipment/line opening
    - Lockout/tagout Program
    - Control over entry into regulated (i.e. hazardous) process areas
    - Hot Work Permit

(C) Evaluating a Contractor's Performance

1. Evaluate the contractor's performance in fulfilling their requirements under this regulation.

## 3. CONTRACTOR RESPOSIBILITY

(A) Assure that each of the contractor's employee's is trained in the work practices to safely perform his/her job, and to document that each employee understood the training. This documentation will include the name of employee, date of the training, and means used to verify that the employee understood the training.

(B) Assure that each of the contractor's employees are instructed in the known potential fire, explosion, or toxic release hazards related to his/her job and the process, and the applicable provisions of the emergency response plan.

(C) Assure that Contractor's employees and subcontractor's/laborers attend the WTP safety orientation and follow the facility's safety rules including safe work practices such as control over entry into hazardous chemical process areas, lockout/tagout, equipment/line opening, confined space safety, and hot work permit.

(D) Advise the facility owner of any unique hazard presented by the contractor's work, or of any hazards found by the contractor.

(E) Obtain and evaluate information pertaining to subcontractor's safety programs.

(F) Assure that subcontractor's and laborers are trained in their work practice to safety perform their jobs.

**4. CONTRACTOR SUBMITTALS**

(A). Training Certification

Prior to the commencement the contractor shall certify in writing to the Owner that those employees involved in work on or around the hazardous chemical process at the Jupiter Water Treatment Plant have successfully completed training in accordance with 40 CFR 68.87(c) and 29 CFR 1910.119(h)(3).

(B). Records Maintenance

The Contractor shall maintain a record of those employees who successfully completed the above training. These records must include the following information:

- Name of the employee
- Contents of training
- Date of training
- Means used to verify that the employee understood the training

(C). Additional Responsibilities

1. Contractor must immediately inform the Owner of all contract employee injuries or illness resulting from work performed on or around and hazardous chemical process.

2. Contractor must immediately inform the Owner of any injuries resulting from any work at the facility.

3. Contractor employees, subcontractors, and laborers must participate in a mandatory on-site safety orientation conducted by the Owner before work begins. It is the Contractor's responsibility to schedule these meetings with the Owner, and it is the Contractor's responsibility to ensure <u>all</u> persons working on the Water Treatment Plant site under this contract have attended the mandatory on-site safety orientation. Failure to do so will result in removal of those persons who have not received the training from the job site until such time as the training is obtained.

# Contractor Safety Qualification Form

| **SECTION 1: COMPANY INFORMATION** |
|---|
| Company Name: |
| Address 1: |
| Address 2: |
| City, State, Zip: |
| Telephone No.: |
| Fax No.: |
| **SECTION 2: NAME(S) AND RELATIONSHIPS OF PARENT COMPANY, AFFILIATES, SUBSIDIARIES, PARTNERS** |
| Company Name: |
| Address: |
| City, State, Zip: |
| Relationship: |
| Company Name: |
| Address: |
| City, State, Zip: |
| Relationship: |
| **SECTION 3: INSURANCE COVERAGE** |
| 3.1 Please attach certificates showing the extent of coverage, exclusions and deductibles for the following:<br>- Commercial Liability Insurance<br>- Automobile Liability Insurance<br>- Contractors Pollution Liability Insurance<br>- Workman's Compensation Insurance |
| 3.2 How long have you been covered by your current provider of Workman's Compensation Insurance?<br><br>_____ |
| 3.3 List the Experience Modification Ratio (EMR) that has been applied to your company's workman's compensation insurance policy for the past five years: |

| Year | Intrastate EMR | Interstate EMR | Comments |
|---|---|---|---|
| | | | |
| | | | |
| | | | |
| | | | |
| | | | |
| | | | |

| 3.4 List the contact information for an insurance broker who can verify your EMR's: |
|---|
| Name: |
| Address 1: |
| Address 2: |
| City, State, Zip: |
| Telephone No.: |
| If you do not have an EMR, please explain: |

**SECTION 4: INJURY AND FATALITY INFORMATION**

4.1 Please transfer the numbers and rates of injuries and illnesses from your firm's OSHA No. 200 Logs to the table below:

| | Year:_____ | | Year:_____ | | Year:_____ | |
|---|---|---|---|---|---|---|
| **Statistic** | No. | Rate | No. | Rate | No. | Rate |
| Lost Workday Cases | | | | | | |
| Restricted Workday Cases | | | | | | |
| Medical Treatment (not First Aid) Cases | | | | | | |
| Total Illness Cases | | | | | | |
| Total Recordable Cases | | | | | | |
| Fatalities | | | | | | |

4.2 If your company has had fatalities in the past three years include location, cause and corrective actions in the space below:

# Contractor Safety Qualification Form (Continued)

**SECTION 5: SAFETY MEETINGS**

5.1 Do you require that *documented* safety meetings be held for:

- Field Supervisors? __ Yes __ No Frequency: _____
- Employees? __ Yes __ No Frequency: _____
- New Hires? __ Yes __ No Frequency: _____
- Subcontractors? __ Yes __ No Frequency: _____

**SECTION 6: SAFETY AUDITS**

6.1 Will a representative of your company audit safety practices on this job?

__Yes __ No

Name: _____ Title: _____

How frequently will the representative visit the project site? _____

**SECTION 7: HEALTH AND SAFETY PROGRAM**

7.1 Does the company have a health and safety program? If yes, please give details below. (The contractor is encouraged to attach a copy of the program to satisfy this requirement).

_____

_____

_____

_____

_____

_____

7.2 Please give the name and telephone number of your company's health and safety officer, if any:

Name:_____Title:_____

Telephone No.: _____

**SECTION 8: HEALTH AND SAFETY CITATIONS**

8.1 Attach a list of any State or Federal Health and Safety citations received during the past three years.

**SECTION 9: SIGNATURE OF COMPANY OFFICER**

I certify that to the best of my knowledge, information, and belief formed after reasonable inquiry, the information submitted is true, accurate, and complete.

Name (print): _____ Title: _____

Signature: _____ Date: _____

# Sworn Statement

PURSUANT TO SECTION 287.133(3)(a),FLORIDA STATUES,
ON PUBLIC ENTITY CRIMES

THIS FORM MUST BE SIGNED AND SWORN TO IN THE PRESENCE OF A NOTARY PUBLIC OR OTHER OFFICIAL AUTHORIZED TO ADMINISTER OATHS.

1. This sworn statement is submitted to _____
**[print name of the public entity]**

by _____
**[print individual's name and title]**

for_____
**[print name of entity submitting sworn statement]**

whose business address is _____

_____

and (if applicable) its Federal Employer Identification Number (FEIN) is: _____
(If the entity has no FEIN, include the Social Security Number of the individual signing this sworn Statement: _____.)

2. I understand that a "public entity crime" as defined in Paragraph 287.133(1)(g), **Florida Statutes**, means a violation of any state or federal law by a person with respect to and directly related to the transaction of business with any public entity or with an agency or political subdivision of any other state or of the United States, including, but not limited to, any bid or contract for goods or services to be provided to any public entity or an agency or political subdivision of any other state or of the United States and involving antitrust, fraud, theft, bribery, collusion, racketeering, conspiracy, or material misrepresentation.

3. I understand that "convicted" or "conviction" as defined in Paragraph 287.133(1)(b), **Florida Statutes**, means a finding or guilt or a conviction of a public entity crime, with or without an adjudication of guilt, in any federal or state trial court of record relating to charges brought by indictment or information after July 1, 1989, as a result of a jury verdict, nonjury trial, or entry of a plea of guilty or nolo contendere.

4. I understand that an "affiliate" as defined in Paragraph 287.133(1)(a), **Florida Statutes**, means:
    1. A predecessor or successor of a person convicted of a public entity crime: or

    2. An entity under the control of any natural person who is active in the management of the entity and who has been convicted of a public entity crime. The term affiliate includes those officers, directors, executives, partners, shareholders, employees, members, and agents who are active in the management of an affiliate. The ownership by one person of shares constituting a controlling interest in another person, or a pooling of equipment or income among persons when not for fair market value under an arm's length agreement, shall be a prima facie case that one person controls another person. A person who knowingly enters into a joint venture with a person who has been convicted of a public entity crime in Florida during the preceding 36 months shall be considered an affiliate.

5. I understand that a "person" as defined in Paragraph 287.133(1)(e), **Florida Statutes**, means any natural person or entity organized under the laws of any state or of the United States with the legal power to enter into a binding contract and which bids or applies to bid on contracts for the provision of goods or services let by a public entity, or which otherwise transacts or applies to transact business with a public entity. The term "person" includes those officers, directors, executives, partners, shareholders, employees, members, and agents who are active in management of an entity.

6. Based on information and belief, the statement which I have marked below is true in relation to the entity submitting this sworn statement. **[indicate which statement applies.]**

   ___ Neither the entity submitting this sworn statement, nor any officers, directors, executives, partners, shareholders, employees, members, or agents who are active in the management of the entity, nor any affiliate of the entity, has been charged with and convicted of a public entity crime subsequent to July 1, 1989.

   ___ The entity submitting this sworn statement, or one or more of its officers, directors, executives, partners, shareholders, employees, members, or agents who are active in the management of the entity, or an affiliate of the entity has been charged with and convicted of a public entity crime subsequent to July 1, 1989.

   ___ The entity submitting this sworn statement, or one or more of its officers, directors, executives, partners, shareholders, employees, members, or agents who are active in the management of the entity, or an affiliate of the entity has been charged with and convicted of a public entity crime subsequent to July 1, 1989. However, there has been a subsequent proceeding before a Hearing Officer of the State of Florida, Division of Administrative Hearings and the Final Order entered by the Hearing Officer determined that it was not in public interest to place the entity submitting this sworn statement on the convicted vendor list.
   **[attach a copy of the final order]**

**I UNDERSTAND THAT THE SUBMISSION OF THIS FORM TO THE CONTRACTING OFFICER FOR THE PUBLIC ENTITY IDENTIFIED IN PARAGRAPH 1 (ONE) ABOVE IS FOR THAT PUBLIC ENTITY ONLY AND, THAT THIS FORM IS VALID THROUGH DECEMBER 31 OF THE CALENDAR YEAR IN WHICH IT IS FILED, I ALSO UNDERSTAND THAT I AM REQUIRED TO INFORM THE PUBLIC ENTITY PRIOR TO ENTERING INTO A CONTRACT IN EXCESS OF THE THRESHOLD AMOUNT PROVIDED IN SECTION 287.017, FLORIDA STATUTES FOR CATEGORY TWO OF ANY CHANGE IN THE INFORMATION CONTAINED IN THIS FORM.**

_____
**[signature]**

Sworn to and subscribed before me this _____ day of _____, _____

Personally known _____

OR Produced identification _____ Notary Public – State of _____

My commission expires _____

_____
(Printed typed or stamped commissioned name notary public)

# Trench Safety

Bidder acknowledges that included in the various items of the proposal and in the Total Bid Price are costs for complying with the Florida Trench Safety Act (90-96, Laws of Fla.) effective October 1, 1990. The bidder further identifies the costs to be summarized below.

| **TRENCH SAFETY MEASURE EXTENDED (DESCRIPTION)** | **UNITS OF MEASURE (LF, SY)** | **UNIT (QUANTITY)** | **UNIT COST** | **COST** |
|---|---|---|---|---|

A. _____

B. _____

C. _____

D. _____

Failure to complete the above may result in the bid being declared non-responsive.

SPACE INTENTIONALLY LEFT BLANK.
PROCEED TO NEXT PAGE.

# Bid Bond

**This page should be clearly marked with a tab for easy identification during the bid opening process.*

| **Bidder** | **Surety** |
|---|---|
| Name: | Name: |
| Phone: | Phone: |
| Address *(principal place of business)*: | Address *(principal place of business)*: |

| **Owner** | | **Bid** |
|---|---|---|
| Name: Town of Jupiter | | Project *(name and location)*: |
| Phone: 561-746-5134 | | Construction of Surficial Aquifer Well 12A and Surficial Wellfield Rehabilitation Program (W2111)17403 Central Blvd., Jupiter, Florida |
| Address *(principal place of business)*: | | |
| Town Hall<br>210 Military Trail<br>Jupiter, FL 33458 | Water Treatment Plant<br>17403 Central Blvd.<br>Jupiter, FL 33458 | Bid Due Date: |

**Bond Number: _____**

| | | |
|---|---|---|
| Penal Sum: | 5% of Initial Contract Term Estimated Value ($646,000) | Date of Bond: |

Surety and Bidder, intending to be legally bound hereby, subject to the terms set forth in this Bid Bond, do each cause this Bid Bond to be duly executed by an authorized officer, agent, or representative. Surety affirms it is authorized to do business in the State of Florida, and the Town of Jupiter, and as having an Agent resident therein.

| Bidder | Surety |
|---|---|
| _____<br>*(Full formal name of Bidder)* | _____<br>*(Full formal name of Surety) (corporate seal)* |
| By: _____<br>*(Signature)* | By: _____<br>*(Signature) (Attach Power of Attorney)* |
| Name: _____<br>*(Printed or typed)* | Name: _____<br>*(Printed or typed)* |
| Title: _____ | Title: _____ |
| Attest: _____<br>*(Signature)* | Attest: _____<br>*(Signature)* |
| Name: _____<br>*(Printed or typed)* | Name: _____<br>*(Printed or typed)* |
| Title: | Title: |

*Notes: (1) Note: Addresses are to be used for giving any required notice. (2) Provide execution by any additional parties, such as joint venturers, if necessary.*

# Bid Bond (continued)

1. Bidder and Surety, jointly and severally, bind themselves, their heirs, executors, administrators, successors, and assigns to pay to Owner upon default of Bidder the penal sum set forth on the face of this Bond. Payment of the penal sum is the extent of Bidder's and Surety's liability. Recovery of such penal sum under the terms of this Bond will be Owner's sole and exclusive remedy upon default of Bidder.
2. Default of Bidder occurs upon the failure of Bidder to deliver within the time required by the Bidding Documents (or any extension thereof agreed to in writing by Owner) the executed Agreement required by the Bidding Documents and any performance and payment bonds, Power of Attorney(s), and Certificate(s) of Insurance required by the Bidding Documents.
3. This obligation will be null and void if:
   3.1. Owner accepts Bidder's Bid and Bidder delivers within the time required by the Bidding Documents (or any extension thereof agreed to in writing by Owner) the executed Agreement required by the Bidding Documents and any performance and payment bonds, Power of Attorney(s), and Certificate(s) of Insurance required by the Bidding Documents, or
   3.2. All Bids are rejected by Owner, or
   3.3. Owner fails to issue a Notice of Award to Bidder within the time specified in the Bidding Documents (or any extension thereof agreed to in writing by Bidder and, if applicable, consented to by Surety when required by Paragraph 5 hereof).
4. Payment under this Bond will be due and payable upon default of Bidder and within 30 calendar days after receipt by Bidder and Surety of written notice of default from Owner, which notice will be given with reasonable promptness, identifying this Bond and the Project and including a statement of the amount due.
5. Surety waives notice of any and all defenses based on or arising out of any time extension to issue Notice of Award agreed to in writing by Owner and Bidder, provided that the total time for issuing Notice of Award including extensions does not in the aggregate exceed 120 days from the Bid due date without Surety's written consent.
6. No suit or action will be commenced under this Bond prior to 30 calendar days after the notice of default required in Paragraph 4 above is received by Bidder and Surety, and in no case later than one year after the Bid due date.
7. Any suit or action under this Bond will be commenced only in a court of competent jurisdiction located in the state in which the Project is located.
8. Notices required hereunder must be in writing and sent to Bidder and Surety at their respective addresses shown on the face of this Bond. Such notices may be sent by personal delivery, commercial courier, or by United States Postal Service registered or certified mail, return receipt requested, postage pre-paid, and will be deemed to be effective upon receipt by the party concerned.
9. Surety shall cause to be attached to this Bond a current and effective Power of Attorney evidencing the authority of the officer, agent, or representative who executed this Bond on behalf of Surety to execute, seal, and deliver such Bond and bind the Surety thereby.
10. This Bond is intended to conform to all applicable statutory requirements. Any applicable requirement of any applicable statute that has been omitted from this Bond will be deemed to be included herein as if set forth at length. If any provision of this Bond conflicts with any applicable statute, then the provision of said statute governs and the remainder of this Bond that is not in conflict therewith continues in full force and effect.
11. The term "Bid" as used herein includes a Bid, offer, or proposal as applicable.

# Notice of Intent to Award

DATE:

TO:

ATT:

Project: Construction of Surficial Aquifer Well 12A and Surficial Wellfield Rehabilitation Program (W2111)
Town of Jupiter Utilities, Jupiter, Florida

Gentlemen:

This is to advise that on [INSERT DATE], a recommendation for award of the above referenced Contract will be made to the Jupiter Town Council as a result of your bid in the amount of [INSERT VALUE] submitted to the Town of Jupiter (Owner) on [INSERT DATE].

Two (2) sets of the Project Manual for this project are attached. Each set contains an unexecuted agreement. Please sign both sets of the Agreement and include the following additional documentation necessary for execution of the Agreement/Contract. DO NOT DATE ANY OF THE DOCUMENTS. The Town will date them upon execution.

- Two original signed and notarized Payment Bonds (on Bond form included with each project manual).
- Two original signed and notarized Performance Bonds (on Bond form included with each project manual).
- Four original Power of Attorneys; one each to accompany each Payment and Performance bond.
- Two current Certificates of Insurance naming the Town of Jupiter as an additional insured per the requirements of the contract.

Please return both signed Project Manuals with supporting documentation to our office for final signatures.

Your attention is invited to the provision whereby your proposal guarantee may be forfeited in the event the Agreement with satisfactory bonds, insurance, power of attorneys is not executed and delivered to the Owner within fifteen (15) consecutive calendar days from [INSERT DATE].

One fully executed original and one copy of the executed Agreement/Contract will be provided to you along with Conformed Construction Documents on or before the Pre-Construction meeting.

Sincerely,

Rebecca J. Wilder, P.E.
Town of Jupiter
Senior Utilities Engineer

# Notice of Award

DATE:

TO:

ATT:

Project: Construction of Surficial Aquifer Well 12A and Surficial Wellfield Rehabilitation Program (W2111)
Town of Jupiter Utilities, Jupiter, Florida

Gentlemen:

This is to advise you that on [INSERT DATE], the Jupiter Town Council approved award of a construction contract to your firm, for the above referenced project as a result of your bid on [INSERT DATE], in the amount of [INSERT VALUE].

One fully executed original and one copy of the executed Agreement/Contract will be provided to you along with Conformed Construction Documents on or before the date of the Pre-Construction meeting. A Notice to Proceed will be issued for commencement of the Contract Time.

We look forward to working with you on this project.

Sincerely,

Rebecca J. Wilder, P.E.
Town of Jupiter
Senior Utilities Engineer

# Agreement (Contract) Between Owner and Contractor

This Agreement (Contract) made this_____ (date) day of _____ (month), _____ (year) by and between the Town of Jupiter, a public agency of the State of Florida hereinafter designated as the "the TOWN" and "OWNER", and [INSERT CONTRACTOR'S NAME], [INSERT CONTRACTOR'S ADDRESS] a Corporation, [INSERT FEIN Number] (FEIN number) hereinafter designated as "the CONTRACTOR", in consideration of the mutual covenants hereinafter set forth agree as follows:

**ARTICLE 1. WORK.**

1.1 CONTRACTOR shall complete all Work as specified or indicated in the Contract Documents. The Work is generally described as follows:

Furnish all permits, labor, equipment and materials necessary to perform well maintenance, rehabilitation and/or replacement of Surficial Aquifer production wells for the Town of Jupiter, located in Jupiter, Florida. Well maintenance activities may include but are not limited to removal/reinstallation of wellhead including downhole equipment and well piping; pump and motor inspection, repair and/or replacement of well mechanical components including miscellaneous welding, well disinfection and bacteriological clearance. Well rehabilitation activities may include but are not limited to removal/reinstallation of wellhead components, static and dynamic downhole well video, brushing existing well casing, clean-out open hole, chemical treatment of wells, removal/replacement of gravel pack, well development including air lift development, high velocity jetting with simultaneous air lift development and pump development, well performance pump testing, well disinfection and bacteriological clearance, site restoration, and completion of all required work to the extent the well facility has been successfully rehabilitated, returned to service and accepted by the OWNER based on the intent of the contract documents. Well replacement activities may include but are not limited to abandonment of an existing well and replacement with a well approximately 160' deep with the top 120' being 20" PVC casing and bottom 40' being either 12" open hole, open hole with liner or 12" stainless steel screen including well construction permitting, drill site preparation, pilot hole construction and logging, well drilling and construction, well development, step rate pump testing, video logging, well disinfection and testing, well site restoration and all other incidentals as outlined on the bid documents and all appurtenances necessary to complete the Work based on the intent of the contract documents.

1.2 The Project for which the Work under the Contract Documents may be the whole or only a part is generally described as follows: **CONSTRUCTION OF SURFICIAL AQUIFER WELL 12A AND SURFICIAL WELLFIELD REHABILITATION PROGRAM (W2111) FOR THE TOWN OF JUPITER UTILITIES, JUPITER, FLORIDA**

**ARTICLE 2. HYDROGEOLOGIST.**

2.1 The Project has been designed by the following: JLA Geosciences, 1931 Commerce Way, suite 3, Jupiter, FL 33458.

2.2 The Town of Jupiter will administer the contract during the construction phase. The Hydrogeologist will serve as the Owner's Representative during the course of the Contract.

**ARTICLE 3. CONTRACT TIME.**

3.1 The Work will have a substantial completion date and a final completion date after the date when the Contract Time commences to run as provided in Paragraph 4.01 of the General Conditions, and as outlined below. There are two substantial and two final completion dates that will apply to this

Contract for the base and additive alternate bids, respectively. Further, all work associated with the additive alternate must be completed between May 15 and September 15. A Notice to Proceed (NTP) will be issued for the base bid. Should the Owner elect to proceed with the additive alternate bid, then a separate NTP will be provided for the additive alternate bid. The Contract durations noted below begin on the date of the Notice to Proceed. The work will be completed and ready for substantial and final payment in accordance with Article 15 of the General Conditions and as outlined below.

**Contract Durations for Well Rehabilitation (Base Bid) Scope:**
(Applies to all Work associated with Well Maintenance and Rehabilitation)

| | |
|---|---|
| Substantial Completion: | 365 calendar days from Notice to Proceed |
| Final Completion: | 365 calendar days from Notice to Proceed |

**Contract Durations for Well 12A (Additive Alternate Bid) Scope:**
(Applies to all Work associated with Abandonment of Well 12 and Construction of 12A):

| | |
|---|---|
| Substantial Completion: | 105 calendar days from Notice to Proceed |
| Final Completion: | 135 calendar days from Notice to Proceed |

3.2 The undersigned understands the Contract time starts on the date of Notice to Proceed. The undersigned understands the Contract Time to Substantial Completion includes time for Contractor to obtain permits, submit and obtain shop drawing approvals, order materials, and substantially complete all the Work required of the Contract. Substantial Completion shall include all work required to abandon all existing wells, construct all new wells, testing and clearance of all wells, submission of well completion reports, final well surveys and final acceptance by PBCHD. Final Completion shall include completion of site restoration, punch list items, demobilization from site, record drawings, and other closeout documents.

3.3 Should Owner elect to proceed with Wells 12 and 12A (bid alternate) then all work associated with this site shall be completed between May 15 and September 15. Failure to complete the work during this time frame and within the contract duration will result in assessment of liquidated damages in the amount of $750/day until the work is substantially complete.

3.4 Unless extended or terminated, the period of performance of this CONTRACT shall commence upon the effective date of execution by the OWNER and continue for a period of 365 days or three hundred and sixty-five calendar days. Written Notice to Proceed and Work Order duration will be mutually agreed upon by both the CONTRACTOR and OWNER and provided in Work Orders outlining work. The CONTRACTOR shall not proceed with work under this CONTRACT until a Work Order with written Notice to Proceed is received from the OWNER.

3.5 Owner and Contractor may agree to renew this Contract at the Contract Unit Prices for items in the Base Bid, Well Rehabilitation, for two (2) additional one (1) year terms, for a total Contract period of three (3) consecutive years. Renewal of this Contract is at the Owner's sole discretion and is subject to fiscal appropriation by the Jupiter Town Council in either or both the Town's Community Investment Program (CIP) and fiscal year operating budgets. If the Contract is renewed, it will be done so by written change order to the Contract and are subject to the same terms, conditions, and unit pricing set forth in the initial Contract and any written amendments/change orders signed by both parties (Owner and Contractor). No compensation shall be made for costs associated with renewal of the Contract. Renewals are contingent upon satisfactory performance evaluations by the Owner and subject to the availability of fiscal year funding approved by the Jupiter Town Council. Contractor may elect not to

extend the Contract with 90 days written notice to Owner. Owner is not obligated to extend the Contract.

Regardless of anything to the contrary, this Contract may be terminated by the Owner at any time and for any reason. Further, the Contractor agrees that it will not be entitled to any claims and/or damages resulting from such termination, including, but not limited to, lost profits, direct or indirect damages, and consequential special or punitive damages.

3.6 The parties agree that the TIME IS OF THE ESSENCE, in the performance of each and every obligation under this CONTRACT. The CONTRACT may be changed only by a change order to the CONTRACT Work Order amendments to individual Work Orders must be completed in writing and signed and dated by Contractor and Owner.

3.7 Liquidated Damages. OWNER and CONTRACTOR recognize that time is of the essence of this Agreement and that OWNER will suffer financial loss if the Work is not substantially complete within the time specified in paragraph 3.1 above, plus any extensions thereof allowed in accordance with Article 11 of the General Conditions. They also recognize the delays, expense and difficulties involved in proving in a legal or arbitration preceding the actual loss suffered by OWNER if the Work is not substantially complete on time. Accordingly, instead of requiring any such proof, OWNER and CONTRACTOR agree that as liquidated damages for delay (But not as a penalty) CONTRACTOR shall pay OWNER Seven Hundred and Fifty 00/100 dollars ($750.00) for each day that expires after the time specified in Paragraph 3.1 for substantial completion until the Work is substantially complete, and Five Hundred 00/100 dollars ($500.00) for each day that expires after the time specified in Paragraph 3.1 from the date of final completion until the work has reached final completion. Final completion includes demobilization from the site. Owner may withhold payment to compensate for liquidated damages either by increasing the amount of money being held in retainage or deduct the amount due in Liquidated Damages from the final payment application. Liquidated damages under this Contract apply to each the substantial completion date and the final completion date.

3.8 The provision of Liquidated Damages for delay shall in no manner affect the TOWN's right to terminate the CONTRACT. The OWNER'S exercise of the right to terminate shall not release the CONTRACTOR from his obligation to pay Liquidated Damages. It is further agreed that the OWNER may deduct from the balance of the CONTRACT sum held by the OWNER the Liquidated Damages stipulated herein or such portions as said balance will cover.

**ARTICLE 4. CONTRACT PRICE.**

4.1 OWNER shall pay CONTRACTOR for performance of the Work in accordance with the Contract Documents in current funds according to the Contract Unit Prices.

4.2 No guarantee is expressed or implied as to the total quantity of commodities/services to be purchased under any open end Contract. Estimated quantities will be used for Bid comparison purposes only. The Owner reserves the right to issue Work Orders as and when required for proposed work for any or all bid items or any combination thereof. Work under this Contract is subject to fiscal appropriation by the Jupiter Town Council in either or both the Town’s Community Investment Program (CIP) and fiscal year operating budgets. Estimated funding budgets anticipated being available for the original contract term and subsequent renewals are provided in the table below.

4.3 The Owner reserves the right to purchase commodities/services specified herein through contracts established by other governmental agencies or through separate procurement actions due to unique or

special needs. If an urgent delivery is required within a short period than the delivery time specified in the Contract, and if the seller is unable to comply therewith, the Owner reserves the right to obtain such delivery from others without penalty or prejudice to the Owner or to the Bidder.

**Anticipated Estimated Annual Funding**
**Town of Jupiter Utilities**
**Construction of Surficial Aquifer Well 12A and**
**Surficial Wellfield Rehabilitation Program Contract (W2111)**

| Term/Years | Description | Estimated Value |
|---|---|---|
| Initial Term (1-year) | Well Rehabilitation & Investigation (CIP) | $261,000 |
| | Well Mechanical Repairs & Replacements (Operating, R&M) | $60,000 |
| | Unanticipated Emergency Repairs | $50,000 |
| | Well 12A Replacement (CIP) | $275,000 |
| | **Initial Term Estimated Total** | **$646,000** |
| 1st Renewal (1-year) | Well Rehabilitation & Investigation (CIP) | $269,000 |
| | Well Mechanical Repairs & Replacements (Operating, R&M) | $62,000 |
| | Unanticipated Emergency Repairs | $50,000 |
| | **1st Renewal Term Estimated Total** | **$381,000** |
| 2nd Renewal Final Term (1-year) | Well Rehabilitation & Investigation (CIP) | $277,000 |
| | Well Mechanical Repairs & Replacements (Operating, R&M) | $64,000 |
| | Unanticipated Emergency Repairs | $50,000 |
| | **2nd Renewal Term Estimated Total** | **$391,000** |
| | **Estimated Total Contract (3-years)** | **$1,418,000** |

**ARTICLE 5. PAYMENT PROCEDURES.**

5.1 Contractor shall submit Applications for Payment in accordance with Article 15 of the General Conditions. Applications for payment will be processed by OWNER as provided in the General Conditions.

5.2 The undersigned, acknowledges that payments made by the Town of Jupiter will be made via electronic funds transfer (EFT) and vendor will provide the Town of Jupiter with the information required to make EFT payments.

5.3 Progress Payments. OWNER shall make progress payments on account of the Contract Price on the basis of CONTRACTOR'S Applications for Payment within 30 days of receipt of each monthly approved application for payment during construction as provided below. All progress payments will be on the basis of the progress of the Work measured by the agreed upon schedule of values provided for in Articles 2 and 15 of the General Conditions.

5.4 Progress payments will be made in an amount equal to 95% of the Work completed, and 95% of materials and equipment not incorporated in the Work but delivered and suitably stored, less in each

case the aggregate of payments previously made. Owner is not obligated to pay for stored materials and may choose to withhold payment until materials are incorporated into the Work.

5.5 Owner, at its discretion may further increase payments to 98% of the work completed upon Substantial Completion. Owner is not obligated to increase payments to 98% of work completed.

5.6 Final Payment. Upon final completion and acceptance of the Work in accordance with Article 15 of the General Conditions, OWNER shall pay the remainder of the Contract Price as provided in said Article 15 of the General Conditions unless liquidated damages are due.

**ARTICLE 6. INTEREST.** Not applicable.

**ARTICLE 7. CONTRACTOR'S REPRESENTATIONS.**

In order to induce OWNER to enter into this Agreement, CONTRACTOR makes the following representations:

7.1 CONTRACTOR has familiarized himself with the nature and extent of the Contract Documents, Work, locality, and with all local conditions and federal, state and local laws, ordinances, rules and regulations that in any manner may affect cost, progress or performance of the Work.

7.2 CONTRACTOR has studied carefully all reports of investigations and tests of subsurface and latent physical conditions at the site or otherwise affecting cost, progress or performance of the Work which were relied upon by ENGINEER in the preparation of the Drawings and Specifications and which have been identified in the Supplementary Conditions.

7.3 CONTRACTOR has made or caused to be made examinations, investigations and tests and studies of such reports and related data in addition to those referred to in Article 7.2 (above) as he deems necessary for the performance of the Work at the Contract Price, within the Contract Time and in accordance with the other terms and conditions of the Contract Documents; and no additional examinations, investigations, tests, reports or similar data are or will be required by CONTRACTOR for such purposes.

7.4 CONTRACTOR has correlated the results of all such observations, examinations, investigations, tests, reports and data with the terms and conditions of the Contract Documents.

7.5 CONTRACTOR has given OWNER written notice of all conflicts, errors or discrepancies that he has discovered in the Contract Documents and the written resolution thereof is acceptable to CONTRACTOR.

**ARTICLE 8. CONTRACT DOCUMENTS.**

8.1 The Contract Documents which comprise the entire agreement between OWNER and CONTRACTOR are attached to this Agreement, made a part hereof and consists of the following:

8.1(a) Index
8.1(b) Table of Contents-Specifications & Appendices
8.1(c) Advertisement for Bids
8.1(d) Instructions to Bidders
8.1(e) Proposal
8.1(f) Contractor Safety Qualifications/Requirements(Including Contractor Safety Qualification Form)
8.1(g) Sworn Statement

8.1(h) Trench Safety
8.1(i) Bid Bond
8.1(j) Notice of Intent to Award
8.1(k) Notice of Award
8.1(l) Agreement (Contract) between OWNER and CONTRACTOR
8.1(m) Payment Bond
8.1(n) Performance Bond
8.1(o) Opinion of Town Attorney
8.1(p) Notice to Proceed
8.1(q) General Conditions (EJCDC Standard General Conditions (2018 Edition), inclusive)
8.1(r) Supplementary Conditions
8.1(s) Any Modifications, including Change Orders, duly delivered after execution of Agreement.
8.1(t) Technical Specifications including Appendices bearing the title: Construction of Surficial Aquifer Well 12A and Surficial Wellfield Rehabilitation Program (W2111)
8.1(u) Drawings bearing the title: Construction of Surficial Aquifer Well 12A and Surficial Wellfield Rehabilitation Program (W2111)

8.2 There are no Contract Documents other than those listed above in this Article 8. The Contract Documents may only be altered, amended or repealed by a modification described in Section 1 of the General Conditions of the Contract.

**ARTICLE 9. MISCELLANEOUS.**

9.1 Terms used in this Agreement which are defined in Article 1 of the General Conditions shall have the meanings indicated in the General Conditions.

9.2 No assignment by a party hereto of any rights under or interests in the Contract Documents will be binding on another party hereto without the written consent of the party sought to be bound; and specifically but without limitation, moneys that may become due and moneys that are due may be assigned without such consent (except to the extent that the effect of this restriction may be limited by law), and unless specifically stated to the contrary in any written consent to an assignment, no assignment will release or discharge the assignor from any duty or responsibility under the Contract Documents.

9.3 OWNER and CONTRACTOR each binds himself, his partners, successors, assigns and legal representatives to the other party hereto, his partners, successors, assigns and legal representatives in respect to all covenants, agreements and obligations contained in the Contract Documents.

9.4 The Inspector General of Palm Beach County has the authority to investigate and audit matters relating to the negotiation and performance of this Contract and in furtherance thereof may demand and obtain records and testimony from the Contractor and its subcontractors and lower tier subcontractors. The Contractor understands and agrees that in addition to other remedies and consequences provided by law, the failure of the Contractor or its subcontractors or lower tier subcontractors to fully cooperate with the Office of Inspector General of Palm Beach County when requested may be deemed by the municipality to be a material breach of this contract justifying its termination. The Office of Inspector General in Palm Beach County is established by Palm Beach County Code, Section 2-421 - 2-440. Failure to cooperate with the Inspector General or interfering with or impeding any investigation shall be in violation of Palm Beach County Code, Section 2-421 – 2-440, and be punished pursuant to Section 125.69, Florida Statutes, in the same manner as a second degree misdemeanor.

9.5 This Agreement is subject to and governed by the laws of the State of Florida, including without limitation Chapter 119, Florida Statutes, which generally makes public all records or other writings made by or received by the parties. The Contractor acknowledges its legal obligation to comply with § 119.0701, Florida Statutes.

9.5(a) A request to inspect or copy public records relating to a public agency's contract for services must be made directly to the public agency. If the public agency does not possess the requested records, the public agency shall immediately notify the contractor of the request, and the contractor must provide the records to the public agency or allow the records to be inspected or copied within a reasonable time.

9.5(b) If a contractor does not comply with the public agency's request for records, the public agency shall enforce the contract provisions in accordance with the contract.

9.5(c) A contractor who fails to provide the public records to the public agency within a reasonable time may be subject to penalties under s. 119.10.

9.5(d) **IF THE CONTRACTOR HAS QUESTIONS REGARDING THE APPLICATION OF CHAPTER 119, FLORIDA STATUTES, TO THE CONTRACTOR'S DUTY TO PROVIDE PUBLIC RECORDS RELATING TO THIS CONTRACT, CONTACT THE CUSTODIAN OF PUBLIC RECORDS AT 561-741-2270, BRITTANYG@JUPITER.FL.US, OR 210 MILITARY TRAIL, JUPITER, FL 33458.**

9.6 The Town of Jupiter encourages and agrees to the successful bidder extending the pricing, terms and conditions of this solicitation or resultant contract to other governmental entities at the discretion of the successful bidder.

9.7 OFFER EXTENDED TO OTHER GOVERNMENT ENTITITES

The Town of Jupiter encourages and agrees to the successful bidder extending the pricing, terms and conditions of this solicitation or resultant contract to other governmental entities at the discretion of the successful bidder.

SPACE INTENTIONALLY LEFT BLANK.
PROCEED TO NEXT PAGE.

IN WITNESS WHEREOF, the parties hereto have signed two (2) copies of this Agreement. At least one counterpart each has been delivered to OWNER and CONTRACTOR. All portions of the Contract Documents have been signed or identified by OWNER and CONTRACTOR.

| OWNER | CONTRACTOR |
|---|---|
| Town of Jupiter<br>210 Military Trail<br>Jupiter, FL 33458 | [INSERT CONTRACTOR]<br>[INSERT CONTRACTORS ADDRESS]<br>[INSERT CONTRACTORS ADDRESS] |
| By: | |
| _____<br>Todd R. Wodraska, Mayor | _____<br>[INSERT CONTRACTORS OFFICIAL AND TITLE] |
| (TOWN SEAL) | (CORPORATE SEAL) |
| ATTEST | ATTEST |
| _____<br>Sally Boylan, Town Clerk | _____<br>PRINT NAME AND POSITION |

# Payment Bond

| **Contractor** | **Surety** |
|---|---|
| Name:<br>Phone:<br>Address *(principal place of business)*: | Name:<br>Phone:<br>Address *(principal place of business)*: |
| **Owner** | **Contract** |
| Name: Town of Jupiter<br>Phone: 561-746-5134<br>Mailing address *(principal place of business)*:<br>Town Hall<br>210 Military Trail<br>Jupiter, FL 33458<br>Water Treatment Plant<br>17403 Central Blvd.<br>Jupiter, FL 33458 | Description *(name and location)*:<br>Construction of Surficial Aquifer Well 12A and Surficial Wellfield Rehabilitation Program (W2111), 17403 Central Blvd., Jupiter, Florida<br>Contract Price:<br>Effective Date of Contract: |
| **Bond Number: _____** | |
| Bond Amount:<br>Date of Bond:<br>*(Date of Bond cannot be earlier than Effective Date of Contract)*<br>Modifications to this Bond form:<br>☐ None ☒ See Paragraph 19 | |

Surety and Contractor, intending to be legally bound hereby, subject to the terms set forth in this Payment Bond, do each cause this Payment Bond to be duly executed by an authorized officer, agent, or representative.

| Contractor as Principal | Surety |
|---|---|
| _____<br>*(Full formal name of Contractor)* | _____<br>*(Full formal name of Surety) (corporate seal)* |
| By: _____<br>*(Signature)* | By: _____<br>*(Signature)(Attach Power of Attorney)* |
| Name: _____<br>*(Printed or typed)* | Name: _____<br>*(Printed or typed)* |
| Title: _____ | Title: _____ |
| Attest: _____<br>*(Signature)* | Attest: _____<br>*(Signature)* |
| Name: _____<br>*(Printed or typed)* | Name: _____<br>*(Printed or typed)* |
| Title: _____ | Title: _____ |

*Notes: (1) Provide supplemental execution by any additional parties, such as joint venturers. (2) Any singular reference to Contractor, Surety, Owner, or other party is considered plural where applicable.*

1. The Contractor and Surety, jointly and severally, bind themselves, their heirs, executors, administrators, successors, and assigns to the Owner to pay for labor, materials, and equipment furnished for use in the performance of the Construction Contract, which is incorporated herein by reference, subject to the following terms.
2. If the Contractor promptly makes payment of all sums due to Claimants, and defends, indemnifies, and holds harmless the Owner from claims, demands, liens, or suits by any person or entity seeking payment for labor, materials, or equipment furnished for use in the performance of the Construction Contract, then the Surety and the Contractor shall have no obligation under this Bond.
3. If there is no Owner Default under the Construction Contract, the Surety's obligation to the Owner under this Bond will arise after the Owner has promptly notified the Contractor and the Surety (at the address described in Paragraph 13) of claims, demands, liens, or suits against the Owner or the Owner's property by any person or entity seeking payment for labor, materials, or equipment furnished for use in the performance of the Construction Contract, and tendered defense of such claims, demands, liens, or suits to the Contractor and the Surety.
4. When the Owner has satisfied the conditions in Paragraph 3, the Surety shall promptly and at the Surety's expense defend, indemnify, and hold harmless the Owner against a duly tendered claim, demand, lien, or suit.
5. The Surety's obligations to a Claimant under this Bond will arise after the following:
    5.1. Claimants who do not have a direct contract with the Contractor
        5.1.1. have furnished a written notice of non-payment to the Contractor, stating with substantial accuracy the amount claimed and the name of the party to whom the materials were, or equipment was, furnished or supplied or for whom the labor was done or performed, within ninety (90) days after having last performed labor or last furnished materials or equipment included in the Claim; and
        5.1.2. have sent a Claim to the Surety (at the address described in Paragraph 13).
    5.2. Claimants who are employed by or have a direct contract with the Contractor have sent a Claim to the Surety (at the address described in Paragraph 13).
6. If a notice of non-payment required by Paragraph 5.1.1 is given by the Owner to the Contractor, that is sufficient to satisfy a Claimant's obligation to furnish a written notice of non-payment under Paragraph 5.1.1.
7. When a Claimant has satisfied the conditions of Paragraph 5.1 or 5.2, whichever is applicable, the Surety shall promptly and at the Surety's expense take the following actions:
    7.1. Send an answer to the Claimant, with a copy to the Owner, within sixty (60) days after receipt of the Claim, stating the amounts that are undisputed and the basis for challenging any amounts that are disputed; and
    7.2. Pay or arrange for payment of any undisputed amounts.
    7.3. The Surety's failure to discharge its obligations under Paragraph 7.1 or 7.2 will not be deemed to constitute a waiver of defenses the Surety or Contractor may have or acquire as to a Claim, except as to undisputed amounts for which the Surety and Claimant have reached agreement. If, however, the Surety fails to discharge its obligations under Paragraph 7.1 or 7.2, the Surety shall indemnify the Claimant for the reasonable attorney's fees the Claimant incurs thereafter to recover any sums found to be due and owing to the Claimant.

8. The Surety's total obligation will not exceed the amount of this Bond, plus the amount of reasonable attorney's fees provided under Paragraph 7.3, and the amount of this Bond will be credited for any payments made in good faith by the Surety.

9. Amounts owed by the Owner to the Contractor under the Construction Contract will be used for the performance of the Construction Contract and to satisfy claims, if any, under any construction performance bond. By the Contractor furnishing and the Owner accepting this Bond, they agree that all funds earned by the Contractor in the performance of the Construction Contract are dedicated to satisfying obligations of the Contractor and Surety under this Bond, subject to the Owner's priority to use the funds for the completion of the work.

10. The Surety shall not be liable to the Owner, Claimants, or others for obligations of the Contractor that are unrelated to the Construction Contract. The Owner shall not be liable for the payment of any costs or expenses of any Claimant under this Bond, and shall have under this Bond no obligation to make payments to or give notice on behalf of Claimants, or otherwise have any obligations to Claimants under this Bond.

11. The Surety hereby waives notice of any change, including changes of time, to the Construction Contract or to related subcontracts, purchase orders, and other obligations.

12. No suit or action will be commenced by a Claimant under this Bond other than in a court of competent jurisdiction in the state in which the project that is the subject of the Construction Contract is located or after the expiration of one year from the date (1) on which the Claimant sent a Claim to the Surety pursuant to Paragraph 5.1.2 or 5.2, or (2) on which the last labor or service was performed by anyone or the last materials or equipment were furnished by anyone under the Construction Contract, whichever of (1) or (2) first occurs. If the provisions of this paragraph are void or prohibited by law, the minimum period of limitation available to sureties as a defense in the jurisdiction of the suit will be applicable.

13. Notice and Claims to the Surety, the Owner, or the Contractor must be mailed or delivered to the address shown on the page on which their signature appears. Actual receipt of notice or Claims, however accomplished, will be sufficient compliance as of the date received.

14. When this Bond has been furnished to comply with a statutory or other legal requirement in the location where the construction was to be performed, any provision in this Bond conflicting with said statutory or legal requirement will be deemed deleted here from and provisions conforming to such statutory or other legal requirement will be deemed incorporated herein. When so furnished, the intent is that this Bond will be construed as a statutory bond and not as a common law bond.

15. This bond is issued in compliance with Section 255.05, Florida Statutes (1987), as may be amended. A claimant, except a laborer, who is not in privity with the contractor and who has not received payment for his labor, materials, or supplies shall, within 45 days after beginning to furnish labor, materials, or supplies for the prosecution of the work, furnish the contractor with a notice that he intends to look to the bond for protection. A claimant who is not in privity with the contractor and who has not received payment for his labor, materials, or supplies shall, within 90 days after performance of the labor or after complete delivery of the materials or supplies, deliver to the contractor and to the surety written notice of the performance of the labor or delivery of the materials or supplies and of the nonpayment. No action for the labor, materials, or supplies may be instituted against the contractor or the surety unless both notices have been given. No action shall be instituted against the contractor or the surety on the bond after 1 year from the performance of the labor or completion of delivery of the materials or supplies.

16. Upon requests by any person or entity appearing to be a potential beneficiary of this Bond, the Contractor and Owner shall promptly furnish a copy of this Bond or shall permit a copy to be made.

17. Definitions

17.1. *Claim*—A written statement by the Claimant including at a minimum:

17.1.1. The name of the Claimant;

17.1.2. The name of the person for whom the labor was done, or materials or equipment furnished;

17.1.3. A copy of the agreement or purchase order pursuant to which labor, materials, or equipment was furnished for use in the performance of the Construction Contract;

17.1.4. A brief description of the labor, materials, or equipment furnished;

17.1.5. The date on which the Claimant last performed labor or last furnished materials or equipment for use in the performance of the Construction Contract;

17.1.6. The total amount earned by the Claimant for labor, materials, or equipment furnished as of the date of the Claim;

17.1.7. The total amount of previous payments received by the Claimant; and

17.1.8. The total amount due and unpaid to the Claimant for labor, materials, or equipment furnished as of the date of the Claim.

17.2. *Claimant*—An individual or entity having a direct contract with the Contractor or with a subcontractor of the Contractor to furnish labor, materials, or equipment for use in the performance of the Construction Contract. The term Claimant also includes any individual or entity that has rightfully asserted a claim under an applicable mechanic's lien or similar statute against the real property upon which the Project is located. The intent of this Bond is to include without limitation in the terms of "labor, materials, or equipment" that part of the water, gas, power, light, heat, oil, gasoline, telephone service, or rental equipment used in the Construction Contract, architectural and engineering services required for performance of the work of the Contractor and the Contractor's subcontractors, and all other items for which a mechanic's lien may be asserted in the jurisdiction where the labor, materials, or equipment were furnished.

17.3. *Construction Contract*—The agreement between the Owner and Contractor identified on the cover page, including all Contract Documents and all changes made to the agreement and the Contract Documents.

17.4. *Owner Default*—Failure of the Owner, which has not been remedied or waived, to pay the Contractor as required under the Construction Contract or to perform and complete or comply with the other material terms of the Construction Contract.

17.5. *Contract Documents*—All the documents that comprise the agreement between the Owner and Contractor.

18. If this Bond is issued for an agreement between a contractor and subcontractor, the term Contractor in this Bond will be deemed to be Subcontractor and the term Owner will be deemed to be Contractor.

19. Modifications to this Bond are as follows: Request for assigned bond number and for phone numbers of each party listed on the bond (Contractor, Surety, and Owner). Addition of Paragraph 15 and renumbering of the paragraphs thereafter.

# Performance Bond

| **Contractor** | **Surety** |
|---|---|
| Name:<br>Phone:<br>Address *(principal place of business)*: | Name:<br>Phone:<br>Address *(principal place of business)*: |
| **Owner** | **Contract** |
| Name: Town of Jupiter<br>Phone: 561-746-5134<br>Mailing address *(principal place of business)*:<br>Town Hall<br>210 Military Trail<br>Jupiter, FL 33458<br>Water Treatment Plant<br>17403 Central Blvd.<br>Jupiter, FL 33458 | Description *(name and location)*:<br>Construction of Surficial Aquifer Well 12A and Surficial Wellfield Rehabilitation Program (W2111), Jupiter, Florida<br><br>Contract Price:<br>Effective Date of Contract: |
| **Bond Number: _____** | |
| Bond Amount:<br>Date of Bond:<br>*(Date of Bond cannot be earlier than Effective Date of Contract)*<br>Modifications to this Bond form:<br>☐ None ☒ See Paragraph 17 | |

Surety and Contractor, intending to be legally bound hereby, subject to the terms set forth in this Performance Bond, do each cause this Performance Bond to be duly executed by an authorized officer, agent, or representative.

| Contractor as Principal | Surety |
|---|---|
| _____<br>*(Full formal name of Contractor)* | _____<br>*(Full formal name of Surety) (corporate seal)* |
| By: _____<br>*(Signature)* | By: _____<br>*(Signature)(Attach Power of Attorney)* |
| Name: _____<br>*(Printed or typed)* | Name: _____<br>*(Printed or typed)* |
| Title: _____ | Title: _____ |
| Attest: _____<br>*(Signature)* | Attest: _____<br>*(Signature)* |
| Name: _____<br>*(Printed or typed)* | Name: _____<br>*(Printed or typed)* |
| Title: _____ | Title: _____ |

*Notes: (1) Provide supplemental execution by any additional parties, such as joint venturers. (2) Any singular reference to Contractor, Surety, Owner, or other party is considered plural where applicable.*

1. The Contractor and Surety, jointly and severally, bind themselves, their heirs, executors, administrators, successors, and assigns to the Owner for the performance of the Construction Contract, which is incorporated herein by reference.

2. If the Contractor performs the Construction Contract, the Surety and the Contractor shall have no obligation under this Bond, except when applicable to participate in a conference as provided in Paragraph 3.

3. If there is no Owner Default under the Construction Contract, the Surety's obligation under this Bond will arise after:

    3.1. The Owner first provides notice to the Contractor and the Surety that the Owner is considering declaring a Contractor Default. Such notice may indicate whether the Owner is requesting a conference among the Owner, Contractor, and Surety to discuss the Contractor's performance. If the Owner does not request a conference, the Surety may, within five (5) business days after receipt of the Owner's notice, request such a conference. If the Surety timely requests a conference, the Owner shall attend. Unless the Owner agrees otherwise, any conference requested under this Paragraph 3.1 will be held within ten (10) business days of the Surety's receipt of the Owner's notice. If the Owner, the Contractor, and the Surety agree, the Contractor shall be allowed a reasonable time to perform the Construction Contract, but such an agreement does not waive the Owner's right, if any, subsequently to declare a Contractor Default;

    3.2. The Owner declares a Contractor Default, terminates the Construction Contract and notifies the Surety; and

    3.3. The Owner has agreed to pay the Balance of the Contract Price in accordance with the terms of the Construction Contract to the Surety or to a contractor selected to perform the Construction Contract.

4. Failure on the part of the Owner to comply with the notice requirement in Paragraph 3.1 does not constitute a failure to comply with a condition precedent to the Surety's obligations, or release the Surety from its obligations, except to the extent the Surety demonstrates actual prejudice.

5. When the Owner has satisfied the conditions of Paragraph 3, the Surety shall promptly and at the Surety's expense take one of the following actions:

    5.1. Arrange for the Contractor, with the consent of the Owner, to perform and complete the Construction Contract;

    5.2. Undertake to perform and complete the Construction Contract itself, through its agents or independent contractors;

    5.3. Obtain bids or negotiated proposals from qualified contractors acceptable to the Owner for a contract for performance and completion of the Construction Contract, arrange for a contract to be prepared for execution by the Owner and a contractor selected with the Owners concurrence, to be secured with performance and payment bonds executed by a qualified surety equivalent to the bonds issued on the Construction Contract, and pay to the Owner the amount of damages as described in Paragraph 7 in excess of the Balance of the Contract Price incurred by the Owner as a result of the Contractor Default; or

    5.4. Waive its right to perform and complete, arrange for completion, or obtain a new contractor, and with reasonable promptness under the circumstances:

        5.4.1. After investigation, determine the amount for which it may be liable to the Owner and, as soon as practicable after the amount is determined, make payment to the Owner; or

        5.4.2 Deny liability in whole or in part and notify the Owner, citing the reasons for denial.

6. If the Surety does not proceed as provided in Paragraph 5 with reasonable promptness, the Surety shall be deemed to be in default on this Bond seven days after receipt of an additional written notice from the Owner to the Surety demanding that the Surety perform its obligations under this Bond, and the Owner shall be entitled to enforce any remedy available to the Owner. If the Surety proceeds as provided in Paragraph 5.4, and the Owner refuses the payment, or the Surety has denied liability, in whole or in part, without further notice, the Owner shall be entitled to enforce any remedy available to the Owner.

7. If the Surety elects to act under Paragraph 5.1, 5.2, or 5.3, then the responsibilities of the Surety to the Owner will not be greater than those of the Contractor under the Construction Contract, and the responsibilities of the Owner to the Surety will not be greater than those of the Owner under the Construction Contract. Subject to the commitment by the Owner to pay the Balance of the Contract Price, the Surety is obligated, without duplication for:

    7.1. the responsibilities of the Contractor for correction of defective work and completion of the Construction Contract;

    7.2. additional legal, design professional, and delay costs resulting from the Contractor's Default, and resulting from the actions or failure to act of the Surety under Paragraph 5; and

    7.3. liquidated damages, or if no liquidated damages are specified in the Construction Contract, actual damages caused by delayed performance or non-performance of the Contractor.

8. If the Surety elects to act under Paragraph 5.1, 5.3, or 5.4, the Surety's liability is limited to the amount of this Bond.

9. The Surety shall not be liable to the Owner or others for obligations of the Contractor that are unrelated to the Construction Contract, and the Balance of the Contract Price will not be reduced or set off on account of any such unrelated obligations. No right of action will accrue on this Bond to any person or entity other than the Owner or its heirs, executors, administrators, successors, and assigns.

10. The Surety hereby waives notice of any change, including changes of time, to the Construction Contract or to related subcontracts, purchase orders, and other obligations.

11. Any proceeding, legal or equitable, under this Bond must be instituted in any court of competent jurisdiction in the location in which the work or part of the work is located and must be instituted within two years after a declaration of Contractor Default or within two years after the Contractor ceased working or within two years after the Surety refuses or fails to perform its obligations under this Bond, whichever occurs first. If the provisions of this paragraph are void or prohibited by law, the minimum periods of limitations available to sureties as a defense in the jurisdiction of the suit will be applicable.

12. Notice to the Surety, the Owner, or the Contractor must be mailed or delivered to the address shown on the page on which their signature appears.

13. When this Bond has been furnished to comply with a statutory or other legal requirement in the location where the construction was to be performed, any provision in this Bond conflicting with said statutory or legal requirement will be deemed deleted therefrom and provisions conforming to such statutory or other legal requirement will be deemed incorporated herein. When so furnished, the intent is that this Bond will be construed as a statutory bond and not as a common law bond.

14. This bond is issued in compliance with Section 255.05, Florida Statutes (1987), as may be amended, which statute supersedes this bond to the extent of any conflict, and to the extent the Public Construction Bond coverage provided in such statute may be broader than this bond. A claimant, except a laborer, who is not in privity with the Contractor and who has not received payment for his labor, materials, or supplies shall, within 45 days after beginning to furnish labor, materials, or supplies for the prosecution of the Work, furnish the Contractor with a notice that he intends to look to the bond for protection. A claimant who is not in privity with the Contractor and who has not received payment for his labor, materials, or supplies

shall, within 90 days after performance of the labor or after complete delivery of the materials or supplies, deliver to the Contractor and to the surety written notice of the performance of the labor or delivery of the materials or supplies and of the nonpayment. No action for the labor, materials, or supplies may be instituted against the Contractor or the surety unless both notices have been given. No action shall be instituted against the Contractor or the surety on the bond after 1 year from the performance of the labor or completion of delivery of the materials or supplies.

15. Definitions

    15.1. *Balance of the Contract Price*—The total amount payable by the Owner to the Contractor under the Construction Contract after all proper adjustments have been made including allowance for the Contractor for any amounts received or to be received by the Owner in settlement of insurance or other claims for damages to which the Contractor is entitled, reduced by all valid and proper payments made to or on behalf of the Contractor under the Construction Contract.

    15.2. *Construction Contract*—The agreement between the Owner and Contractor identified on the cover page, including all Contract Documents and changes made to the agreement and the Contract Documents.

    15.3. *Contractor Default*—Failure of the Contractor, which has not been remedied or waived, to perform or otherwise to comply with a material term of the Construction Contract.

    15.4. *Owner Default*—Failure of the Owner, which has not been remedied or waived, to pay the Contractor as required under the Construction Contract or to perform and complete or comply with the other material terms of the Construction Contract.

    15.5. *Contract Documents*—All the documents that comprise the agreement between the Owner and Contractor.

16. If this Bond is issued for an agreement between a contractor and subcontractor, the term Contractor in this Bond will be deemed to be Subcontractor and the term Owner will be deemed to be Contractor.

17. Modifications to this Bond are as follows: Request for assigned bond number and for phone numbers of each party listed on the bond (Contractor, Surety, and Owner). Addition of Paragraph 14 and renumbering of the paragraphs thereafter.

# Opinion of Town Attorney

This is to certify that I have examined the attached Contract Documents, that after such examination, I am of the opinion that such documents conform to the laws of the State of Florida, that the execution of the Contract and the Contract Bonds is in due and proper form, that the representative of the respective Contracting Parties have full power and authority to execute such Contract and Contract Bond on behalf of the respective Contracting Parties and that the foregoing agreements constitute valid and binding obligations on such parties.

_____

Thomas J. Baird, Esquire
Attorney for Town of Jupiter

This the ____ day of _____, 20_____.

# Notice to Proceed (NTP) – Base Bid, Well Rehabilitation

DATE:

TO:

ATT:

PROJECT: Construction of Surficial Aquifer Well 12A and Surficial Wellfield Rehabilitation Program (W2111)
Town of Jupiter Utilities
Jupiter, Florida

Gentlemen:

One fully executed copy of your contract is enclosed. The commencement date for the initial term of this Contract for the Base Bid Well Rehabilitation Work is _____ (365 calendar days from NTP). The expiration date is _____.

The OWNER reserves the right to extend the Base Bid portion of the Contract for additional terms as described in the Contract Documents. The Owner will issue work orders to the Contractor for each well rehabilitation effort to be performed under this contract. The work orders will be agreed to between the Owner and the Contractor in writing before mobilization and will include the specific work tasks identified in the Bid/Contract Schedule of Values with associated unit pricing and time to complete the work. A preconstruction meeting will be scheduled on or before the date of Notice to Proceed.

Your attention is invited to the provision whereby you shall start to perform your obligations under the Contract Documents on the Commencement date. Said date shall begin the Contract Time. The Town of Jupiter will monitor the progress of the work and conformance with the contract. **The Contractor shall be responsible for recording the Payment and Performance Bonds with Palm Beach County and provide the Owner with certified copies of the recorded documents before commencing work.**

We look forward to working with you on this project.

Sincerely,

Rebecca J. Wilder, P.E.
Town of Jupiter
Senior Utilities Engineer

# Notice to Proceed (NTP) – Additive Alternate, Well 12A

DATE:

TO:

ATT:

PROJECT: Construction of Surficial Aquifer Well 12A and Surficial Wellfield Rehabilitation Program (W2111)
Town of Jupiter Utilities
Jupiter, Florida

Gentlemen:

The commencement date for the Additive Alternate Bid for Well 12A term of this Contract is _____. The following completion dates apply:

Additive Alternate Scope (Item Nos. 40-58): Well 12A

Substantial Completion:_____ (105 calendar days from this NTP)

Final Completion: _____ (135 calendar days from this NTP)

Your attention is invited to the provision whereby you shall start to perform your obligations under the Contract Documents on the Commencement date. Said date shall begin the Contract Time. The Town of Jupiter will monitor the progress of the work and conformance with the contract.

We look forward to working with you on this project.

Sincerely,

Rebecca J. Wilder, P.E.
Town of Jupiter
Senior Utilities Engineer

# STANDARD GENERAL CONDITIONS OF THE CONSTRUCTION CONTRACT

## TABLE OF CONTENTS


**Page**

Article 1—Definitions and Terminology ..... 1
1.01 Defined Terms ..... 1
1.02 Terminology ..... 6
Article 2—Preliminary Matters ..... 7
2.01 Delivery of Performance and Payment Bonds; Evidence of Insurance ..... 7
2.02 Copies of Documents ..... 7
2.03 Before Starting Construction ..... 7
2.04 Preconstruction Conference; Designation of Authorized Representatives ..... 8
2.05 Acceptance of Schedules ..... 8
2.06 Electronic Transmittals ..... 8
Article 3—Contract Documents: Intent, Requirements, Reuse ..... 9
3.01 Intent ..... 9
3.02 Reference Standards ..... 9
3.03 Reporting and Resolving Discrepancies ..... 10
3.04 Requirements of the Contract Documents ..... 10
3.05 Reuse of Documents ..... 11
Article 4—Commencement and Progress of the Work ..... 11
4.01 Commencement of Contract Times; Notice to Proceed ..... 11
4.02 Starting the Work ..... 11
4.03 Reference Points ..... 11
4.04 Progress Schedule ..... 12
4.05 Delays in Contractor's Progress ..... 12
Article 5—Site; Subsurface and Physical Conditions; Hazardous Environmental Conditions ..... 13
5.01 Availability of Lands ..... 13
5.02 Use of Site and Other Areas ..... 14
5.03 Subsurface and Physical Conditions ..... 15
5.04 Differing Subsurface or Physical Conditions ..... 16




**Copyright© 2018 National Society of Professional Engineers, American Council of Engineering Companies, and American Society of Civil Engineers. All rights reserved.**

5.05 Underground Facilities ..... 17
5.06 Hazardous Environmental Conditions at Site ..... 19
Article 6—Bonds and Insurance ..... 21
6.01 Performance, Payment, and Other Bonds ..... 21
6.02 Insurance—General Provisions ..... 22
6.03 Contractor's Insurance ..... 24
6.04 Builder's Risk and Other Property Insurance ..... 25
6.05 Property Losses; Subrogation ..... 25
6.06 Receipt and Application of Property Insurance Proceeds ..... 27
Article 7—Contractor's Responsibilities ..... 27
7.01 Contractor's Means and Methods of Construction ..... 27
7.02 Supervision and Superintendence ..... 27
7.03 Labor; Working Hours ..... 27
7.04 Services, Materials, and Equipment ..... 28
7.05 "Or Equals" ..... 28
7.06 Substitutes ..... 29
7.07 Concerning Subcontractors and Suppliers ..... 31
7.08 Patent Fees and Royalties ..... 32
7.09 Permits ..... 33
7.10 Taxes ..... 33
7.11 Laws and Regulations ..... 33
7.12 Record Documents ..... 33
7.13 Safety and Protection ..... 34
7.14 Hazard Communication Programs ..... 35
7.15 Emergencies ..... 35
7.16 Submittals ..... 35
7.17 Contractor's General Warranty and Guarantee ..... 38
7.18 Indemnification ..... 39
7.19 Delegation of Professional Design Services ..... 39
Article 8—Other Work at the Site ..... 40
8.01 Other Work ..... 40
8.02 Coordination ..... 41
8.03 Legal Relationships ..... 41


**Copyright© 2018 National Society of Professional Engineers, American Council of Engineering Companies, and American Society of Civil Engineers. All rights reserved.**

Article 9—Owner's Responsibilities ..... 42
9.01 Communications to Contractor ..... 42
9.02 Replacement of Engineer ..... 42
9.03 Furnish Data ..... 42
9.04 Pay When Due ..... 42
9.05 Lands and Easements; Reports, Tests, and Drawings ..... 43
9.06 Insurance ..... 43
9.07 Change Orders ..... 43
9.08 Inspections, Tests, and Approvals ..... 43
9.09 Limitations on Owner's Responsibilities ..... 43
9.10 Undisclosed Hazardous Environmental Condition ..... 43
9.11 Evidence of Financial Arrangements ..... 43
9.12 Safety Programs ..... 43
Article 10—Engineer's Status During Construction ..... 44
10.01 Owner's Representative ..... 44
10.02 Visits to Site ..... 44
10.03 Resident Project Representative ..... 44
10.04 Engineer's Authority ..... 44
10.05 Determinations for Unit Price Work ..... 45
10.06 Decisions on Requirements of Contract Documents and Acceptability of Work ..... 45
10.07 Limitations on Engineer's Authority and Responsibilities ..... 45
10.08 Compliance with Safety Program ..... 45
Article 11—Changes to the Contract ..... 46
11.01 Amending and Supplementing the Contract ..... 46
11.02 Change Orders ..... 46
11.03 Work Change Directives ..... 46
11.04 Field Orders ..... 47
11.05 Owner-Authorized Changes in the Work ..... 47
11.06 Unauthorized Changes in the Work ..... 47
11.07 Change of Contract Price ..... 47
11.08 Change of Contract Times ..... 49
11.09 Change Proposals ..... 49
11.10 Notification to Surety ..... 50


**Copyright© 2018 National Society of Professional Engineers, American Council of Engineering Companies, and American Society of Civil Engineers. All rights reserved.**

Article 12—Claims ..... 50
12.01 Claims ..... 50
Article 13—Cost of the Work; Allowances; Unit Price Work ..... 51
13.01 Cost of the Work ..... 51
13.02 Allowances ..... 55
13.03 Unit Price Work ..... 55
Article 14—Tests and Inspections; Correction, Removal, or Acceptance of Defective Work ..... 56
14.01 Access to Work ..... 56
14.02 Tests, Inspections, and Approvals ..... 56
14.03 Defective Work ..... 57
14.04 Acceptance of Defective Work ..... 58
14.05 Uncovering Work ..... 58
14.06 Owner May Stop the Work ..... 58
14.07 Owner May Correct Defective Work ..... 59
Article 15—Payments to Contractor; Set-Offs; Completion; Correction Period ..... 59
15.01 Progress Payments ..... 59
15.02 Contractor's Warranty of Title ..... 62
15.03 Substantial Completion ..... 62
15.04 Partial Use or Occupancy ..... 63
15.05 Final Inspection ..... 64
15.06 Final Payment ..... 64
15.07 Waiver of Claims ..... 65
15.08 Correction Period ..... 66
Article 16—Suspension of Work and Termination ..... 67
16.01 Owner May Suspend Work ..... 67
16.02 Owner May Terminate for Cause ..... 67
16.03 Owner May Terminate for Convenience ..... 68
16.04 Contractor May Stop Work or Terminate ..... 68
Article 17—Final Resolution of Disputes ..... 69
17.01 Methods and Procedures ..... 69
Article 18—Miscellaneous ..... 69
18.01 Giving Notice ..... 69
18.02 Computation of Times ..... 69


**Copyright© 2018 National Society of Professional Engineers, American Council of Engineering Companies, and American Society of Civil Engineers. All rights reserved.**

18.03 Cumulative Remedies ..... 70
18.04 Limitation of Damages ..... 70
18.05 No Waiver ..... 70
18.06 Survival of Obligations ..... 70
18.07 Controlling Law ..... 70
18.08 Assignment of Contract ..... 70
18.09 Successors and Assigns ..... 70
18.10 Headings ..... 70


**Copyright© 2018 National Society of Professional Engineers, American Council of Engineering Companies, and American Society of Civil Engineers. All rights reserved.**

# STANDARD GENERAL CONDITIONS OF THE CONSTRUCTION CONTRACT

## ARTICLE 1—DEFINITIONS AND TERMINOLOGY

1.01 *Defined Terms*

A. Wherever used in the Bidding Requirements or Contract Documents, a term printed with initial capital letters, including the term's singular and plural forms, will have the meaning indicated in the definitions below. In addition to terms specifically defined, terms with initial capital letters in the Contract Documents include references to identified articles and paragraphs, and the titles of other documents or forms.

1. *Addenda*—Written or graphic instruments issued prior to the opening of Bids which clarify, correct, or change the Bidding Requirements or the proposed Contract Documents.

2. *Agreement*—The written instrument, executed by Owner and Contractor, that sets forth the Contract Price and Contract Times, identifies the parties and the Engineer, and designates the specific items that are Contract Documents.

3. *Application for Payment*—The document prepared by Contractor, in a form acceptable to Engineer, to request progress or final payments, and which is to be accompanied by such supporting documentation as is required by the Contract Documents.

4. *Bid*—The offer of a Bidder submitted on the prescribed form setting forth the prices for the Work to be performed.

5. *Bidder*—An individual or entity that submits a Bid to Owner.

6. *Bidding Documents*—The Bidding Requirements, the proposed Contract Documents, and all Addenda.

7. *Bidding Requirements*—The Advertisement or invitation to bid, Instructions to Bidders, Bid Bond or other Bid security, if any, the Bid Form, and the Bid with any attachments.

8. *Change Order*—A document which is signed by Contractor and Owner and authorizes an addition, deletion, or revision in the Work or an adjustment in the Contract Price or the Contract Times, or other revision to the Contract, issued on or after the Effective Date of the Contract.

9. *Change Proposal*—A written request by Contractor, duly submitted in compliance with the procedural requirements set forth herein, seeking an adjustment in Contract Price or Contract Times; contesting an initial decision by Engineer concerning the requirements of the Contract Documents or the acceptability of Work under the Contract Documents; challenging a set-off against payments due; or seeking other relief with respect to the terms of the Contract.

10. *Claim*

*a.* A demand or assertion by Owner directly to Contractor, duly submitted in compliance with the procedural requirements set forth herein, seeking an adjustment of Contract Price or Contract Times; contesting an initial decision by Engineer concerning the


**Copyright© 2018 National Society of Professional Engineers, American Council of Engineering Companies, and American Society of Civil Engineers. All rights reserved.**

requirements of the Contract Documents or the acceptability of Work under the Contract Documents; contesting Engineer's decision regarding a Change Proposal; seeking resolution of a contractual issue that Engineer has declined to address; or seeking other relief with respect to the terms of the Contract.

b. A demand or assertion by Contractor directly to Owner, duly submitted in compliance with the procedural requirements set forth herein, contesting Engineer's decision regarding a Change Proposal, or seeking resolution of a contractual issue that Engineer has declined to address.

c. A demand or assertion by Owner or Contractor, duly submitted in compliance with the procedural requirements set forth herein, made pursuant to Paragraph 12.01.A.4, concerning disputes arising after Engineer has issued a recommendation of final payment.

*d.* A demand for money or services by a third party is not a Claim.

11. *Constituent of Concern*—Asbestos, petroleum, radioactive materials, polychlorinated biphenyls (PCBs), lead-based paint (as defined by the HUD/EPA standard), hazardous waste, and any substance, product, waste, or other material of any nature whatsoever that is or becomes listed, regulated, or addressed pursuant to Laws and Regulations regulating, relating to, or imposing liability or standards of conduct concerning, any hazardous, toxic, or dangerous waste, substance, or material.

12. *Contract*—The entire and integrated written contract between Owner and Contractor concerning the Work.

13. *Contract Documents*—Those items so designated in the Agreement, and which together comprise the Contract.

14. *Contract Price*—The money that Owner has agreed to pay Contractor for completion of the Work in accordance with the Contract Documents.

15. *Contract Times*—The number of days or the dates by which Contractor shall: (a) achieve Milestones, if any; (b) achieve Substantial Completion; and (c) complete the Work.

16. *Contractor*—The individual or entity with which Owner has contracted for performance of the Work.

17. *Cost of the Work*—See Paragraph 13.01 for definition.

18. *Drawings*—The part of the Contract that graphically shows the scope, extent, and character of the Work to be performed by Contractor.

19. *Effective Date of the Contract*—The date, indicated in the Agreement, on which the Contract becomes effective.

20. *Electronic Document*—Any Project-related correspondence, attachments to correspondence, data, documents, drawings, information, or graphics, including but not limited to Shop Drawings and other Submittals, that are in an electronic or digital format.

21. *Electronic Means*—Electronic mail (email), upload/download from a secure Project website, or other communications methods that allow: (a) the transmission or communication of Electronic Documents; (b) the documentation of transmissions, including sending and receipt; (c) printing of the transmitted Electronic Document by the


**Copyright© 2018 National Society of Professional Engineers, American Council of Engineering Companies, and American Society of Civil Engineers. All rights reserved.**

recipient; (d) the storage and archiving of the Electronic Document by sender and recipient; and (e) the use by recipient of the Electronic Document for purposes permitted by this Contract. Electronic Means does not include the use of text messaging, or of Facebook, Twitter, Instagram, or similar social media services for transmission of Electronic Documents.

22. *Engineer*—The individual or entity named as such in the Agreement.

23. *Field Order*—A written order issued by Engineer which requires minor changes in the Work but does not change the Contract Price or the Contract Times.

24. *Hazardous Environmental Condition*—The presence at the Site of Constituents of Concern in such quantities or circumstances that may present a danger to persons or property exposed thereto.

    a. The presence at the Site of materials that are necessary for the execution of the Work, or that are to be incorporated into the Work, and that are controlled and contained pursuant to industry practices, Laws and Regulations, and the requirements of the Contract, is not a Hazardous Environmental Condition.

    b. The presence of Constituents of Concern that are to be removed or remediated as part of the Work is not a Hazardous Environmental Condition.

    c. The presence of Constituents of Concern as part of the routine, anticipated, and obvious working conditions at the Site, is not a Hazardous Environmental Condition.

25. *Laws and Regulations; Laws or Regulations*—Any and all applicable laws, statutes, rules, regulations, ordinances, codes, and binding decrees, resolutions, and orders of any and all governmental bodies, agencies, authorities, and courts having jurisdiction.

26. *Liens*—Charges, security interests, or encumbrances upon Contract-related funds, real property, or personal property.

27. *Milestone*—A principal event in the performance of the Work that the Contract requires Contractor to achieve by an intermediate completion date, or by a time prior to Substantial Completion of all the Work.

28. *Notice of Award*—The written notice by Owner to a Bidder of Owner's acceptance of the Bid.

29. *Notice to Proceed*—A written notice by Owner to Contractor fixing the date on which the Contract Times will commence to run and on which Contractor shall start to perform the Work.

30. *Owner*—The individual or entity with which Contractor has contracted regarding the Work, and which has agreed to pay Contractor for the performance of the Work, pursuant to the terms of the Contract.

31. *Progress Schedule*—A schedule, prepared and maintained by Contractor, describing the sequence and duration of the activities comprising Contractor's plan to accomplish the Work within the Contract Times.

32. *Project*—The total undertaking to be accomplished for Owner by engineers, contractors, and others, including planning, study, design, construction, testing, commissioning, and start-up, and of which the Work to be performed under the Contract Documents is a part.


**Copyright© 2018 National Society of Professional Engineers, American Council of Engineering Companies, and American Society of Civil Engineers. All rights reserved.**

33. *Resident Project Representative*—The authorized representative of Engineer assigned to assist Engineer at the Site. As used herein, the term Resident Project Representative (RPR) includes any assistants or field staff of Resident Project Representative.

34. *Samples*—Physical examples of materials, equipment, or workmanship that are representative of some portion of the Work and that establish the standards by which such portion of the Work will be judged.

35. *Schedule of Submittals*—A schedule, prepared and maintained by Contractor, of required submittals and the time requirements for Engineer's review of the submittals.

36. *Schedule of Values*—A schedule, prepared and maintained by Contractor, allocating portions of the Contract Price to various portions of the Work and used as the basis for reviewing Contractor's Applications for Payment.

37. *Shop Drawings*—All drawings, diagrams, illustrations, schedules, and other data or information that are specifically prepared or assembled by or for Contractor and submitted by Contractor to illustrate some portion of the Work. Shop Drawings, whether approved or not, are not Drawings and are not Contract Documents.

38. *Site*—Lands or areas indicated in the Contract Documents as being furnished by Owner upon which the Work is to be performed, including rights-of-way and easements, and such other lands or areas furnished by Owner which are designated for the use of Contractor.

39. *Specifications*—The part of the Contract that consists of written requirements for materials, equipment, systems, standards, and workmanship as applied to the Work, and certain administrative requirements and procedural matters applicable to the Work.

40. *Subcontractor*—An individual or entity having a direct contract with Contractor or with any other Subcontractor for the performance of a part of the Work.

41. *Submittal*—A written or graphic document, prepared by or for Contractor, which the Contract Documents require Contractor to submit to Engineer, or that is indicated as a Submittal in the Schedule of Submittals accepted by Engineer. Submittals may include Shop Drawings and Samples; schedules; product data; Owner-delegated designs; sustainable design information; information on special procedures; testing plans; results of tests and evaluations, source quality-control testing and inspections, and field or Site quality-control testing and inspections; warranties and certifications; Suppliers' instructions and reports; records of delivery of spare parts and tools; operations and maintenance data; Project photographic documentation; record documents; and other such documents required by the Contract Documents. Submittals, whether or not approved or accepted by Engineer, are not Contract Documents. Change Proposals, Change Orders, Claims, notices, Applications for Payment, and requests for interpretation or clarification are not Submittals.

42. *Substantial Completion*—The time at which the Work (or a specified part thereof) has progressed to the point where, in the opinion of Engineer, the Work (or a specified part thereof) is sufficiently complete, in accordance with the Contract Documents, so that the Work (or a specified part thereof) can be utilized for the purposes for which it is intended. The terms "substantially complete" and "substantially completed" as applied to all or part of the Work refer to Substantial Completion of such Work.


**Copyright© 2018 National Society of Professional Engineers, American Council of Engineering Companies, and American Society of Civil Engineers. All rights reserved.**

43. *Successful Bidder*—The Bidder to which the Owner makes an award of contract.

44. *Supplementary Conditions*—The part of the Contract that amends or supplements these General Conditions.

45. *Supplier*—A manufacturer, fabricator, supplier, distributor, or vendor having a direct contract with Contractor or with any Subcontractor to furnish materials or equipment to be incorporated in the Work by Contractor or a Subcontractor.

46. *Technical Data*

    a. Those items expressly identified as Technical Data in the Supplementary Conditions, with respect to either (1) existing subsurface conditions at or adjacent to the Site, or existing physical conditions at or adjacent to the Site including existing surface or subsurface structures (except Underground Facilities) or (2) Hazardous Environmental Conditions at the Site.

    b. If no such express identifications of Technical Data have been made with respect to conditions at the Site, then Technical Data is defined, with respect to conditions at the Site under Paragraphs 5.03, 5.04, and 5.06, as the data contained in boring logs, recorded measurements of subsurface water levels, assessments of the condition of subsurface facilities, laboratory test results, and other factual, objective information regarding conditions at the Site that are set forth in any geotechnical, environmental, or other Site or facilities conditions report prepared for the Project and made available to Contractor.

    c. Information and data regarding the presence or location of Underground Facilities are not intended to be categorized, identified, or defined as Technical Data, and instead Underground Facilities are shown or indicated on the Drawings.

47. *Underground Facilities*—All active or not-in-service underground lines, pipelines, conduits, ducts, encasements, cables, wires, manholes, vaults, tanks, tunnels, or other such facilities or systems at the Site, including but not limited to those facilities or systems that produce, transmit, distribute, or convey telephone or other communications, cable television, fiber optic transmissions, power, electricity, light, heat, gases, oil, crude oil products, liquid petroleum products, water, steam, waste, wastewater, storm water, other liquids or chemicals, or traffic or other control systems. An abandoned facility or system is not an Underground Facility.

48. *Unit Price Work*—Work to be paid for on the basis of unit prices.

49. *Work*—The entire construction or the various separately identifiable parts thereof required to be provided under the Contract Documents. Work includes and is the result of performing or providing all labor, services, and documentation necessary to produce such construction; furnishing, installing, and incorporating all materials and equipment into such construction; and may include related services such as testing, start-up, and commissioning, all as required by the Contract Documents.

50. *Work Change Directive*—A written directive to Contractor issued on or after the Effective Date of the Contract, signed by Owner and recommended by Engineer, ordering an addition, deletion, or revision in the Work.


**Copyright© 2018 National Society of Professional Engineers, American Council of Engineering Companies, and American Society of Civil Engineers. All rights reserved.**

1.02 *Terminology*

A. The words and terms discussed in Paragraphs 1.02.B, C, D, and E are not defined terms that require initial capital letters, but, when used in the Bidding Requirements or Contract Documents, have the indicated meaning.

B. *Intent of Certain Terms or Adjectives*: The Contract Documents include the terms "as allowed," "as approved," "as ordered," "as directed" or terms of like effect or import to authorize an exercise of professional judgment by Engineer. In addition, the adjectives "reasonable," "suitable," "acceptable," "proper," "satisfactory," or adjectives of like effect or import are used to describe an action or determination of Engineer as to the Work. It is intended that such exercise of professional judgment, action, or determination will be solely to evaluate, in general, the Work for compliance with the information in the Contract Documents and with the design concept of the Project as a functioning whole as shown or indicated in the Contract Documents (unless there is a specific statement indicating otherwise). The use of any such term or adjective is not intended to and shall not be effective to assign to Engineer any duty or authority to supervise or direct the performance of the Work, or any duty or authority to undertake responsibility contrary to the provisions of Article 10 or any other provision of the Contract Documents.

C. *Day*: The word "day" means a calendar day of 24 hours measured from midnight to the next midnight.

D. *Defective*: The word "defective," when modifying the word "Work," refers to Work that is unsatisfactory, faulty, or deficient in that it:

1. does not conform to the Contract Documents;

2. does not meet the requirements of any applicable inspection, reference standard, test, or approval referred to in the Contract Documents; or

3. has been damaged prior to Engineer's recommendation of final payment (unless responsibility for the protection thereof has been assumed by Owner at Substantial Completion in accordance with Paragraph 15.03 or Paragraph 15.04).

E. *Furnish, Install, Perform, Provide*

1. The word "furnish," when used in connection with services, materials, or equipment, means to supply and deliver said services, materials, or equipment to the Site (or some other specified location) ready for use or installation and in usable or operable condition.

2. The word "install," when used in connection with services, materials, or equipment, means to put into use or place in final position said services, materials, or equipment complete and ready for intended use.

3. The words "perform" or "provide," when used in connection with services, materials, or equipment, means to furnish and install said services, materials, or equipment complete and ready for intended use.

4. If the Contract Documents establish an obligation of Contractor with respect to specific services, materials, or equipment, but do not expressly use any of the four words "furnish," "install," "perform," or "provide," then Contractor shall furnish and install said services, materials, or equipment complete and ready for intended use.


**Copyright© 2018 National Society of Professional Engineers, American Council of Engineering Companies, and American Society of Civil Engineers. All rights reserved.**

F. *Contract Price or Contract Times*: References to a change in "Contract Price or Contract Times" or "Contract Times or Contract Price" or similar, indicate that such change applies to (1) Contract Price, (2) Contract Times, or (3) both Contract Price and Contract Times, as warranted, even if the term "or both" is not expressed.

G. Unless stated otherwise in the Contract Documents, words or phrases that have a well-known technical or construction industry or trade meaning are used in the Contract Documents in accordance with such recognized meaning.

**ARTICLE 2—PRELIMINARY MATTERS**

2.01 *Delivery of Performance and Payment Bonds; Evidence of Insurance*

A. *Performance and Payment Bonds*: When Contractor delivers the signed counterparts of the Agreement to Owner, Contractor shall also deliver to Owner the performance bond and payment bond (if the Contract requires Contractor to furnish such bonds).

B. *Evidence of Contractor's Insurance*: When Contractor delivers the signed counterparts of the Agreement to Owner, Contractor shall also deliver to Owner, with copies to each additional insured (as identified in the Contract), the certificates, endorsements, and other evidence of insurance required to be provided by Contractor in accordance with Article 6, except to the extent the Supplementary Conditions expressly establish other dates for delivery of specific insurance policies.

C. *Evidence of Owner's Insurance*: After receipt of the signed counterparts of the Agreement and all required bonds and insurance documentation, Owner shall promptly deliver to Contractor, with copies to each additional insured (as identified in the Contract), the certificates and other evidence of insurance required to be provided by Owner under Article 6.

2.02 *Copies of Documents*

A. Owner shall furnish to Contractor four printed copies of the Contract (including one fully signed counterpart of the Agreement), and one copy in electronic portable document format (PDF). Additional printed copies will be furnished upon request at the cost of reproduction.

B. Owner shall maintain and safeguard at least one original printed record version of the Contract, including Drawings and Specifications signed and sealed by Engineer and other design professionals. Owner shall make such original printed record version of the Contract available to Contractor for review. Owner may delegate the responsibilities under this provision to Engineer.

2.03 *Before Starting Construction*

A. *Preliminary Schedules*: Within 10 days after the Effective Date of the Contract (or as otherwise required by the Contract Documents), Contractor shall submit to Engineer for timely review:

1. a preliminary Progress Schedule indicating the times (numbers of days or dates) for starting and completing the various stages of the Work, including any Milestones specified in the Contract;

2. a preliminary Schedule of Submittals; and

3. a preliminary Schedule of Values for all of the Work which includes quantities and prices of items which when added together equal the Contract Price and subdivides the Work


**Copyright© 2018 National Society of Professional Engineers, American Council of Engineering Companies, and American Society of Civil Engineers. All rights reserved.**

into component parts in sufficient detail to serve as the basis for progress payments during performance of the Work. Such prices will include an appropriate amount of overhead and profit applicable to each item of Work.

2.04 *Preconstruction Conference; Designation of Authorized Representatives*

A. Before any Work at the Site is started, a conference attended by Owner, Contractor, Engineer, and others as appropriate will be held to establish a working understanding among the parties as to the Work, and to discuss the schedules referred to in Paragraph 2.03.A, procedures for handling Shop Drawings, Samples, and other Submittals, processing Applications for Payment, electronic or digital transmittals, and maintaining required records.

B. At this conference Owner and Contractor each shall designate, in writing, a specific individual to act as its authorized representative with respect to the services and responsibilities under the Contract. Such individuals shall have the authority to transmit and receive information, render decisions relative to the Contract, and otherwise act on behalf of each respective party.

2.05 *Acceptance of Schedules*

A. At least 10 days before submission of the first Application for Payment a conference, attended by Contractor, Engineer, and others as appropriate, will be held to review the schedules submitted in accordance with Paragraph 2.03.A. No progress payment will be made to Contractor until acceptable schedules are submitted to Engineer.

1. The Progress Schedule will be acceptable to Engineer if it provides an orderly progression of the Work to completion within the Contract Times. Such acceptance will not impose on Engineer responsibility for the Progress Schedule, for sequencing, scheduling, or progress of the Work, nor interfere with or relieve Contractor from Contractor's full responsibility therefor.

2. Contractor's Schedule of Submittals will be acceptable to Engineer if it provides a workable arrangement for reviewing and processing the required submittals.

3. Contractor's Schedule of Values will be acceptable to Engineer as to form and substance if it provides a reasonable allocation of the Contract Price to the component parts of the Work.

4. If a schedule is not acceptable, Contractor will have an additional 10 days to revise and resubmit the schedule.

2.06 *Electronic Transmittals*

A. Except as otherwise stated elsewhere in the Contract, the Owner, Engineer, and Contractor may send, and shall accept, Electronic Documents transmitted by Electronic Means.

B. If the Contract does not establish protocols for Electronic Means, then Owner, Engineer, and Contractor shall jointly develop such protocols.

C. Subject to any governing protocols for Electronic Means, when transmitting Electronic Documents by Electronic Means, the transmitting party makes no representations as to long-term compatibility, usability, or readability of the Electronic Documents resulting from the recipient's use of software application packages, operating systems, or computer hardware differing from those used in the drafting or transmittal of the Electronic Documents.


**Copyright© 2018 National Society of Professional Engineers, American Council of Engineering Companies, and American Society of Civil Engineers. All rights reserved.**

## ARTICLE 3—CONTRACT DOCUMENTS: INTENT, REQUIREMENTS, REUSE

3.01 *Intent*

A. The Contract Documents are complementary; what is required by one Contract Document is as binding as if required by all.

B. It is the intent of the Contract Documents to describe a functionally complete Project (or part thereof) to be constructed in accordance with the Contract Documents.

C. Unless otherwise stated in the Contract Documents, if there is a discrepancy between the electronic versions of the Contract Documents (including any printed copies derived from such electronic versions) and the printed record version, the printed record version will govern.

D. The Contract supersedes prior negotiations, representations, and agreements, whether written or oral.

E. Engineer will issue clarifications and interpretations of the Contract Documents as provided herein.

F. Any provision or part of the Contract Documents held to be void or unenforceable under any Law or Regulation will be deemed stricken, and all remaining provisions will continue to be valid and binding upon Owner and Contractor, which agree that the Contract Documents will be reformed to replace such stricken provision or part thereof with a valid and enforceable provision that comes as close as possible to expressing the intention of the stricken provision.

G. Nothing in the Contract Documents creates:

1. any contractual relationship between Owner or Engineer and any Subcontractor, Supplier, or other individual or entity performing or furnishing any of the Work, for the benefit of such Subcontractor, Supplier, or other individual or entity; or

2. any obligation on the part of Owner or Engineer to pay or to see to the payment of any money due any such Subcontractor, Supplier, or other individual or entity, except as may otherwise be required by Laws and Regulations.

3.02 *Reference Standards*

A. *Standards Specifications, Codes, Laws and Regulations*

1. Reference in the Contract Documents to standard specifications, manuals, reference standards, or codes of any technical society, organization, or association, or to Laws or Regulations, whether such reference be specific or by implication, means the standard specification, manual, reference standard, code, or Laws or Regulations in effect at the time of opening of Bids (or on the Effective Date of the Contract if there were no Bids), except as may be otherwise specifically stated in the Contract Documents.

2. No provision of any such standard specification, manual, reference standard, or code, and no instruction of a Supplier, will be effective to change the duties or responsibilities of Owner, Contractor, or Engineer from those set forth in the part of the Contract Documents prepared by or for Engineer. No such provision or instruction shall be effective to assign to Owner or Engineer any duty or authority to supervise or direct the performance of the Work, or any duty or authority to undertake responsibility


**Copyright© 2018 National Society of Professional Engineers, American Council of Engineering Companies, and American Society of Civil Engineers. All rights reserved.**

inconsistent with the provisions of the part of the Contract Documents prepared by or for Engineer.

3.03 *Reporting and Resolving Discrepancies*

A. *Reporting Discrepancies*

1. *Contractor's Verification of Figures and Field Measurements*: Before undertaking each part of the Work, Contractor shall carefully study the Contract Documents, and check and verify pertinent figures and dimensions therein, particularly with respect to applicable field measurements. Contractor shall promptly report in writing to Engineer any conflict, error, ambiguity, or discrepancy that Contractor discovers, or has actual knowledge of, and shall not proceed with any Work affected thereby until the conflict, error, ambiguity, or discrepancy is resolved by a clarification or interpretation by Engineer, or by an amendment or supplement to the Contract issued pursuant to Paragraph 11.01.

2. *Contractor's Review of Contract Documents*: If, before or during the performance of the Work, Contractor discovers any conflict, error, ambiguity, or discrepancy within the Contract Documents, or between the Contract Documents and (a) any applicable Law or Regulation, (b) actual field conditions, (c) any standard specification, manual, reference standard, or code, or (d) any instruction of any Supplier, then Contractor shall promptly report it to Engineer in writing. Contractor shall not proceed with the Work affected thereby (except in an emergency as required by Paragraph 7.15) until the conflict, error, ambiguity, or discrepancy is resolved, by a clarification or interpretation by Engineer, or by an amendment or supplement to the Contract issued pursuant to Paragraph 11.01.

3. Contractor shall not be liable to Owner or Engineer for failure to report any conflict, error, ambiguity, or discrepancy in the Contract Documents unless Contractor had actual knowledge thereof.

B. *Resolving Discrepancies*

1. Except as may be otherwise specifically stated in the Contract Documents, the provisions of the part of the Contract Documents prepared by or for Engineer take precedence in resolving any conflict, error, ambiguity, or discrepancy between such provisions of the Contract Documents and:

a. the provisions of any standard specification, manual, reference standard, or code, or the instruction of any Supplier (whether or not specifically incorporated by reference as a Contract Document); or

b. the provisions of any Laws or Regulations applicable to the performance of the Work (unless such an interpretation of the provisions of the Contract Documents would result in violation of such Law or Regulation).

3.04 *Requirements of the Contract Documents*

A. During the performance of the Work and until final payment, Contractor and Owner shall submit to the Engineer in writing all matters in question concerning the requirements of the Contract Documents (sometimes referred to as requests for information or interpretation—RFIs), or relating to the acceptability of the Work under the Contract Documents, as soon as possible after such matters arise. Engineer will be the initial interpreter of the requirements of the Contract Documents, and judge of the acceptability of the Work.


**Copyright© 2018 National Society of Professional Engineers, American Council of Engineering Companies, and American Society of Civil Engineers. All rights reserved.**

B. Engineer will, with reasonable promptness, render a written clarification, interpretation, or decision on the issue submitted, or initiate an amendment or supplement to the Contract Documents. Engineer's written clarification, interpretation, or decision will be final and binding on Contractor, unless it appeals by submitting a Change Proposal, and on Owner, unless it appeals by filing a Claim.

C. If a submitted matter in question concerns terms and conditions of the Contract Documents that do not involve (1) the performance or acceptability of the Work under the Contract Documents, (2) the design (as set forth in the Drawings, Specifications, or otherwise), or (3) other engineering or technical matters, then Engineer will promptly notify Owner and Contractor in writing that Engineer is unable to provide a decision or interpretation. If Owner and Contractor are unable to agree on resolution of such a matter in question, either party may pursue resolution as provided in Article 12.

3.05 *Reuse of Documents*

A. Contractor and its Subcontractors and Suppliers shall not:

1. have or acquire any title to or ownership rights in any of the Drawings, Specifications, or other documents (or copies of any thereof) prepared by or bearing the seal of Engineer or its consultants, including electronic media versions, or reuse any such Drawings, Specifications, other documents, or copies thereof on extensions of the Project or any other project without written consent of Owner and Engineer and specific written verification or adaptation by Engineer; or

2. have or acquire any title or ownership rights in any other Contract Documents, reuse any such Contract Documents for any purpose without Owner's express written consent, or violate any copyrights pertaining to such Contract Documents.

B. The prohibitions of this Paragraph 3.05 will survive final payment, or termination of the Contract. Nothing herein precludes Contractor from retaining copies of the Contract Documents for record purposes.

**ARTICLE 4—COMMENCEMENT AND PROGRESS OF THE WORK**

4.01 *Commencement of Contract Times; Notice to Proceed*

A. The Contract Times will commence to run on the 30th day after the Effective Date of the Contract or, if a Notice to Proceed is given, on the day indicated in the Notice to Proceed. A Notice to Proceed may be given at any time within 30 days after the Effective Date of the Contract. In no event will the Contract Times commence to run later than the 60th day after the day of Bid opening or the 30th day after the Effective Date of the Contract, whichever date is earlier.

4.02 *Starting the Work*

A. Contractor shall start to perform the Work on the date when the Contract Times commence to run. No Work may be done at the Site prior to such date.

4.03 *Reference Points*

A. Owner shall provide engineering surveys to establish reference points for construction which in Engineer's judgment are necessary to enable Contractor to proceed with the Work. Contractor shall be responsible for laying out the Work, shall protect and preserve the


**Copyright© 2018 National Society of Professional Engineers, American Council of Engineering Companies, and American Society of Civil Engineers. All rights reserved.**

established reference points and property monuments, and shall make no changes or relocations without the prior written approval of Owner. Contractor shall report to Engineer whenever any reference point or property monument is lost or destroyed or requires relocation because of necessary changes in grades or locations, and shall be responsible for the accurate replacement or relocation of such reference points or property monuments by professionally qualified personnel.

4.04 *Progress Schedule*

A. Contractor shall adhere to the Progress Schedule established in accordance with Paragraph 2.05 as it may be adjusted from time to time as provided below.

1. Contractor shall submit to Engineer for acceptance (to the extent indicated in Paragraph 2.05) proposed adjustments in the Progress Schedule that will not result in changing the Contract Times.

2. Proposed adjustments in the Progress Schedule that will change the Contract Times must be submitted in accordance with the requirements of Article 11.

B. Contractor shall carry on the Work and adhere to the Progress Schedule during all disputes or disagreements with Owner. No Work will be delayed or postponed pending resolution of any disputes or disagreements, or during any appeal process, except as permitted by Paragraph 16.04, or as Owner and Contractor may otherwise agree in writing.

4.05 *Delays in Contractor's Progress*

A. If Owner, Engineer, or anyone for whom Owner is responsible, delays, disrupts, or interferes with the performance or progress of the Work, then Contractor shall be entitled to an equitable adjustment in Contract Price or Contract Times.

B. Contractor shall not be entitled to an adjustment in Contract Price or Contract Times for delay, disruption, or interference caused by or within the control of Contractor. Delay, disruption, and interference attributable to and within the control of a Subcontractor or Supplier shall be deemed to be within the control of Contractor.

C. If Contractor's performance or progress is delayed, disrupted, or interfered with by unanticipated causes not the fault of and beyond the control of Owner, Contractor, and those for which they are responsible, then Contractor shall be entitled to an equitable adjustment in Contract Times. Such an adjustment will be Contractor's sole and exclusive remedy for the delays, disruption, and interference described in this paragraph. Causes of delay, disruption, or interference that may give rise to an adjustment in Contract Times under this paragraph include but are not limited to the following:

1. Severe and unavoidable natural catastrophes such as fires, floods, epidemics, and earthquakes;

2. Abnormal weather conditions;

3. Acts or failures to act of third-party utility owners or other third-party entities (other than those third-party utility owners or other third-party entities performing other work at or adjacent to the Site as arranged by or under contract with Owner, as contemplated in Article 8); and

4. Acts of war or terrorism.


**Copyright© 2018 National Society of Professional Engineers, American Council of Engineering Companies, and American Society of Civil Engineers. All rights reserved.**

D. Contractor's entitlement to an adjustment of Contract Times or Contract Price is limited as follows:

1. Contractor's entitlement to an adjustment of the Contract Times is conditioned on the delay, disruption, or interference adversely affecting an activity on the critical path to completion of the Work, as of the time of the delay, disruption, or interference.

2. Contractor shall not be entitled to an adjustment in Contract Price for any delay, disruption, or interference if such delay is concurrent with a delay, disruption, or interference caused by or within the control of Contractor. Such a concurrent delay by Contractor shall not preclude an adjustment of Contract Times to which Contractor is otherwise entitled.

3. Adjustments of Contract Times or Contract Price are subject to the provisions of Article 11.

E. Each Contractor request or Change Proposal seeking an increase in Contract Times or Contract Price must be supplemented by supporting data that sets forth in detail the following:

1. The circumstances that form the basis for the requested adjustment;

2. The date upon which each cause of delay, disruption, or interference began to affect the progress of the Work;

3. The date upon which each cause of delay, disruption, or interference ceased to affect the progress of the Work;

4. The number of days' increase in Contract Times claimed as a consequence of each such cause of delay, disruption, or interference; and

5. The impact on Contract Price, in accordance with the provisions of Paragraph 11.07.

Contractor shall also furnish such additional supporting documentation as Owner or Engineer may require including, where appropriate, a revised progress schedule indicating all the activities affected by the delay, disruption, or interference, and an explanation of the effect of the delay, disruption, or interference on the critical path to completion of the Work.

F. Delays, disruption, and interference to the performance or progress of the Work resulting from the existence of a differing subsurface or physical condition, an Underground Facility that was not shown or indicated by the Contract Documents, or not shown or indicated with reasonable accuracy, and those resulting from Hazardous Environmental Conditions, are governed by Article 5, together with the provisions of Paragraphs 4.05.D and 4.05.E.

G. Paragraph 8.03 addresses delays, disruption, and interference to the performance or progress of the Work resulting from the performance of certain other work at or adjacent to the Site.

## ARTICLE 5—SITE; SUBSURFACE AND PHYSICAL CONDITIONS; HAZARDOUS ENVIRONMENTAL CONDITIONS

5.01 *Availability of Lands*

A. Owner shall furnish the Site. Owner shall notify Contractor in writing of any encumbrances or restrictions not of general application but specifically related to use of the Site with which Contractor must comply in performing the Work.


**Copyright© 2018 National Society of Professional Engineers, American Council of Engineering Companies, and American Society of Civil Engineers. All rights reserved.**

B. Upon reasonable written request, Owner shall furnish Contractor with a current statement of record legal title and legal description of the lands upon which permanent improvements are to be made and Owner's interest therein as necessary for giving notice of or filing a mechanic's or construction lien against such lands in accordance with applicable Laws and Regulations.

C. Contractor shall provide for all additional lands and access thereto that may be required for temporary construction facilities or storage of materials and equipment.

5.02 *Use of Site and Other Areas*

A. *Limitation on Use of Site and Other Areas*

1. Contractor shall confine construction equipment, temporary construction facilities, the storage of materials and equipment, and the operations of workers to the Site, adjacent areas that Contractor has arranged to use through construction easements or otherwise, and other adjacent areas permitted by Laws and Regulations, and shall not unreasonably encumber the Site and such other adjacent areas with construction equipment or other materials or equipment. Contractor shall assume full responsibility for (a) damage to the Site; (b) damage to any such other adjacent areas used for Contractor's operations; (c) damage to any other adjacent land or areas, or to improvements, structures, utilities, or similar facilities located at such adjacent lands or areas; and (d) for injuries and losses sustained by the owners or occupants of any such land or areas; provided that such damage or injuries result from the performance of the Work or from other actions or conduct of the Contractor or those for which Contractor is responsible.

2. If a damage or injury claim is made by the owner or occupant of any such land or area because of the performance of the Work, or because of other actions or conduct of the Contractor or those for which Contractor is responsible, Contractor shall (a) take immediate corrective or remedial action as required by Paragraph 7.13, or otherwise; (b) promptly attempt to settle the claim as to all parties through negotiations with such owner or occupant, or otherwise resolve the claim by arbitration or other dispute resolution proceeding, or in a court of competent jurisdiction; and (c) to the fullest extent permitted by Laws and Regulations, indemnify and hold harmless Owner and Engineer, and the officers, directors, members, partners, employees, agents, consultants and subcontractors of each and any of them, from and against any such claim, and against all costs, losses, and damages (including but not limited to all fees and charges of engineers, architects, attorneys, and other professionals and all court or arbitration or other dispute resolution costs) arising out of or relating to any claim or action, legal or equitable, brought by any such owner or occupant against Owner, Engineer, or any other party indemnified hereunder to the extent caused directly or indirectly, in whole or in part by, or based upon, Contractor's performance of the Work, or because of other actions or conduct of the Contractor or those for which Contractor is responsible.

B. *Removal of Debris During Performance of the Work*: During the progress of the Work the Contractor shall keep the Site and other adjacent areas free from accumulations of waste materials, rubbish, and other debris. Removal and disposal of such waste materials, rubbish, and other debris will conform to applicable Laws and Regulations.

C. *Cleaning*: Prior to Substantial Completion of the Work Contractor shall clean the Site and the Work and make it ready for utilization by Owner. At the completion of the Work Contractor shall remove from the Site and adjacent areas all tools, appliances, construction equipment


**Copyright© 2018 National Society of Professional Engineers, American Council of Engineering Companies, and American Society of Civil Engineers. All rights reserved.**

and machinery, and surplus materials and shall restore to original condition all property not designated for alteration by the Contract Documents.

D. *Loading of Structures*: Contractor shall not load nor permit any part of any structure to be loaded in any manner that will endanger the structure, nor shall Contractor subject any part of the Work or adjacent structures or land to stresses or pressures that will endanger them.

5.03 *Subsurface and Physical Conditions*

A. *Reports and Drawings*: The Supplementary Conditions identify:

1. Those reports of explorations and tests of subsurface conditions at or adjacent to the Site that contain Technical Data;

2. Those drawings of existing physical conditions at or adjacent to the Site, including those drawings depicting existing surface or subsurface structures at or adjacent to the Site (except Underground Facilities), that contain Technical Data; and

3. Technical Data contained in such reports and drawings.

B. *Underground Facilities*: Underground Facilities are shown or indicated on the Drawings, pursuant to Paragraph 5.05, and not in the drawings referred to in Paragraph 5.03.A. Information and data regarding the presence or location of Underground Facilities are not intended to be categorized, identified, or defined as Technical Data.

C. *Reliance by Contractor on Technical Data*: Contractor may rely upon the accuracy of the Technical Data expressly identified in the Supplementary Conditions with respect to such reports and drawings, but such reports and drawings are not Contract Documents. If no such express identification has been made, then Contractor may rely upon the accuracy of the Technical Data as defined in Paragraph 1.01.A.46.b.

D. *Limitations of Other Data and Documents*: Except for such reliance on Technical Data, Contractor may not rely upon or make any claim against Owner or Engineer, or any of their officers, directors, members, partners, employees, agents, consultants, or subcontractors, with respect to:

1. the completeness of such reports and drawings for Contractor's purposes, including, but not limited to, any aspects of the means, methods, techniques, sequences, and procedures of construction to be employed by Contractor, and safety precautions and programs incident thereto;

2. other data, interpretations, opinions, and information contained in such reports or shown or indicated in such drawings;

3. the contents of other Site-related documents made available to Contractor, such as record drawings from other projects at or adjacent to the Site, or Owner's archival documents concerning the Site; or

4. any Contractor interpretation of or conclusion drawn from any Technical Data or any such other data, interpretations, opinions, or information.


**Copyright© 2018 National Society of Professional Engineers, American Council of Engineering Companies, and American Society of Civil Engineers. All rights reserved.**

5.04 *Differing Subsurface or Physical Conditions*

A. *Notice by Contractor*: If Contractor believes that any subsurface or physical condition that is uncovered or revealed at the Site:

1. is of such a nature as to establish that any Technical Data on which Contractor is entitled to rely as provided in Paragraph 5.03 is materially inaccurate;

2. is of such a nature as to require a change in the Drawings or Specifications;

3. differs materially from that shown or indicated in the Contract Documents; or

4. is of an unusual nature, and differs materially from conditions ordinarily encountered and generally recognized as inherent in work of the character provided for in the Contract Documents;

then Contractor shall, promptly after becoming aware thereof and before further disturbing the subsurface or physical conditions or performing any Work in connection therewith (except in an emergency as required by Paragraph 7.15), notify Owner and Engineer in writing about such condition. Contractor shall not further disturb such condition or perform any Work in connection therewith (except with respect to an emergency) until receipt of a written statement permitting Contractor to do so.

B. *Engineer's Review*: After receipt of written notice as required by the preceding paragraph, Engineer will promptly review the subsurface or physical condition in question; determine whether it is necessary for Owner to obtain additional exploration or tests with respect to the condition; conclude whether the condition falls within any one or more of the differing site condition categories in Paragraph 5.04.A; obtain any pertinent cost or schedule information from Contractor; prepare recommendations to Owner regarding the Contractor's resumption of Work in connection with the subsurface or physical condition in question and the need for any change in the Drawings or Specifications; and advise Owner in writing of Engineer's findings, conclusions, and recommendations.

C. *Owner's Statement to Contractor Regarding Site Condition*: After receipt of Engineer's written findings, conclusions, and recommendations, Owner shall issue a written statement to Contractor (with a copy to Engineer) regarding the subsurface or physical condition in question, addressing the resumption of Work in connection with such condition, indicating whether any change in the Drawings or Specifications will be made, and adopting or rejecting Engineer's written findings, conclusions, and recommendations, in whole or in part.

D. *Early Resumption of Work*: If at any time Engineer determines that Work in connection with the subsurface or physical condition in question may resume prior to completion of Engineer's review or Owner's issuance of its statement to Contractor, because the condition in question has been adequately documented, and analyzed on a preliminary basis, then the Engineer may at its discretion instruct Contractor to resume such Work.

E. *Possible Price and Times Adjustments*

1. Contractor shall be entitled to an equitable adjustment in Contract Price or Contract Times, to the extent that the existence of a differing subsurface or physical condition, or any related delay, disruption, or interference, causes an increase or decrease in


**Copyright© 2018 National Society of Professional Engineers, American Council of Engineering Companies, and American Society of Civil Engineers. All rights reserved.**

Contractor's cost of, or time required for, performance of the Work; subject, however, to the following:

a. Such condition must fall within any one or more of the categories described in Paragraph 5.04.A;

b. With respect to Work that is paid for on a unit price basis, any adjustment in Contract Price will be subject to the provisions of Paragraph 13.03; and,

c. Contractor's entitlement to an adjustment of the Contract Times is subject to the provisions of Paragraphs 4.05.D and 4.05.E.

2. Contractor shall not be entitled to any adjustment in the Contract Price or Contract Times with respect to a subsurface or physical condition if:

a. Contractor knew of the existence of such condition at the time Contractor made a commitment to Owner with respect to Contract Price and Contract Times by the submission of a Bid or becoming bound under a negotiated contract, or otherwise;

b. The existence of such condition reasonably could have been discovered or revealed as a result of any examination, investigation, exploration, test, or study of the Site and contiguous areas expressly required by the Bidding Requirements or Contract Documents to be conducted by or for Contractor prior to Contractor's making such commitment; or

c. Contractor failed to give the written notice required by Paragraph 5.04.A.

3. If Owner and Contractor agree regarding Contractor's entitlement to and the amount or extent of any adjustment in the Contract Price or Contract Times, then any such adjustment will be set forth in a Change Order.

4. Contractor may submit a Change Proposal regarding its entitlement to or the amount or extent of any adjustment in the Contract Price or Contract Times, no later than 30 days after Owner's issuance of the Owner's written statement to Contractor regarding the subsurface or physical condition in question.

F. *Underground Facilities; Hazardous Environmental Conditions*: Paragraph 5.05 governs rights and responsibilities regarding the presence or location of Underground Facilities. Paragraph 5.06 governs rights and responsibilities regarding Hazardous Environmental Conditions. The provisions of Paragraphs 5.03 and 5.04 are not applicable to the presence or location of Underground Facilities, or to Hazardous Environmental Conditions.

5.05 *Underground Facilities*

A. *Contractor's Responsibilities*: Unless it is otherwise expressly provided in the Supplementary Conditions, the cost of all of the following are included in the Contract Price, and Contractor shall have full responsibility for:

1. reviewing and checking all information and data regarding existing Underground Facilities at the Site;

2. complying with applicable state and local utility damage prevention Laws and Regulations;


**Copyright© 2018 National Society of Professional Engineers, American Council of Engineering Companies, and American Society of Civil Engineers. All rights reserved.**

3. verifying the actual location of those Underground Facilities shown or indicated in the Contract Documents as being within the area affected by the Work, by exposing such Underground Facilities during the course of construction;

4. coordination of the Work with the owners (including Owner) of such Underground Facilities, during construction; and

5. the safety and protection of all existing Underground Facilities at the Site, and repairing any damage thereto resulting from the Work.

B. *Notice by Contractor*: If Contractor believes that an Underground Facility that is uncovered or revealed at the Site was not shown or indicated on the Drawings, or was not shown or indicated on the Drawings with reasonable accuracy, then Contractor shall, promptly after becoming aware thereof and before further disturbing conditions affected thereby or performing any Work in connection therewith (except in an emergency as required by Paragraph 7.15), notify Owner and Engineer in writing regarding such Underground Facility.

C. *Engineer's Review*: Engineer will:

1. promptly review the Underground Facility and conclude whether such Underground Facility was not shown or indicated on the Drawings, or was not shown or indicated with reasonable accuracy;

2. identify and communicate with the owner of the Underground Facility; prepare recommendations to Owner (and if necessary issue any preliminary instructions to Contractor) regarding the Contractor's resumption of Work in connection with the Underground Facility in question;

3. obtain any pertinent cost or schedule information from Contractor; determine the extent, if any, to which a change is required in the Drawings or Specifications to reflect and document the consequences of the existence or location of the Underground Facility; and

4. advise Owner in writing of Engineer's findings, conclusions, and recommendations.

During such time, Contractor shall be responsible for the safety and protection of such Underground Facility.

D. *Owner's Statement to Contractor Regarding Underground Facility*: After receipt of Engineer's written findings, conclusions, and recommendations, Owner shall issue a written statement to Contractor (with a copy to Engineer) regarding the Underground Facility in question addressing the resumption of Work in connection with such Underground Facility, indicating whether any change in the Drawings or Specifications will be made, and adopting or rejecting Engineer's written findings, conclusions, and recommendations in whole or in part.

E. *Early Resumption of Work*: If at any time Engineer determines that Work in connection with the Underground Facility may resume prior to completion of Engineer's review or Owner's issuance of its statement to Contractor, because the Underground Facility in question and conditions affected by its presence have been adequately documented, and analyzed on a preliminary basis, then the Engineer may at its discretion instruct Contractor to resume such Work.

F. *Possible Price and Times Adjustments*

1. Contractor shall be entitled to an equitable adjustment in the Contract Price or Contract Times, to the extent that any existing Underground Facility at the Site that was not shown


**Copyright© 2018 National Society of Professional Engineers, American Council of Engineering Companies, and American Society of Civil Engineers. All rights reserved.**

or indicated on the Drawings, or was not shown or indicated with reasonable accuracy, or any related delay, disruption, or interference, causes an increase or decrease in Contractor's cost of, or time required for, performance of the Work; subject, however, to the following:

a. With respect to Work that is paid for on a unit price basis, any adjustment in Contract Price will be subject to the provisions of Paragraph 13.03;

b. Contractor's entitlement to an adjustment of the Contract Times is subject to the provisions of Paragraphs 4.05.D and 4.05.E; and

c. Contractor gave the notice required in Paragraph 5.05.B.

2. If Owner and Contractor agree regarding Contractor's entitlement to and the amount or extent of any adjustment in the Contract Price or Contract Times, then any such adjustment will be set forth in a Change Order.

3. Contractor may submit a Change Proposal regarding its entitlement to or the amount or extent of any adjustment in the Contract Price or Contract Times, no later than 30 days after Owner's issuance of the Owner's written statement to Contractor regarding the Underground Facility in question.

4. The information and data shown or indicated on the Drawings with respect to existing Underground Facilities at the Site is based on information and data (a) furnished by the owners of such Underground Facilities, or by others, (b) obtained from available records, or (c) gathered in an investigation conducted in accordance with the current edition of ASCE 38, Standard Guideline for the Collection and Depiction of Existing Subsurface Utility Data, by the American Society of Civil Engineers. If such information or data is incorrect or incomplete, Contractor's remedies are limited to those set forth in this Paragraph 5.05.F.

5.06 *Hazardous Environmental Conditions at Site*

A. *Reports and Drawings*: The Supplementary Conditions identify:

1. those reports known to Owner relating to Hazardous Environmental Conditions that have been identified at or adjacent to the Site;

2. drawings known to Owner relating to Hazardous Environmental Conditions that have been identified at or adjacent to the Site; and

3. Technical Data contained in such reports and drawings.

B. *Reliance by Contractor on Technical Data Authorized*: Contractor may rely upon the accuracy of the Technical Data expressly identified in the Supplementary Conditions with respect to such reports and drawings, but such reports and drawings are not Contract Documents. If no such express identification has been made, then Contractor may rely on the accuracy of the Technical Data as defined in Paragraph 1.01.A.46.b. Except for such reliance on Technical Data, Contractor may not rely upon or make any claim against Owner or Engineer, or any of their officers, directors, members, partners, employees, agents, consultants, or subcontractors, with respect to:

1. the completeness of such reports and drawings for Contractor's purposes, including, but not limited to, any aspects of the means, methods, techniques, sequences and procedures


**Copyright© 2018 National Society of Professional Engineers, American Council of Engineering Companies, and American Society of Civil Engineers. All rights reserved.**

of construction to be employed by Contractor, and safety precautions and programs incident thereto;

2. other data, interpretations, opinions, and information contained in such reports or shown or indicated in such drawings; or

3. any Contractor interpretation of or conclusion drawn from any Technical Data or any such other data, interpretations, opinions or information.

C. Contractor shall not be responsible for removing or remediating any Hazardous Environmental Condition encountered, uncovered, or revealed at the Site unless such removal or remediation is expressly identified in the Contract Documents to be within the scope of the Work.

D. Contractor shall be responsible for controlling, containing, and duly removing all Constituents of Concern brought to the Site by Contractor, Subcontractors, Suppliers, or anyone else for whom Contractor is responsible, and for any associated costs; and for the costs of removing and remediating any Hazardous Environmental Condition created by the presence of any such Constituents of Concern.

E. If Contractor encounters, uncovers, or reveals a Hazardous Environmental Condition whose removal or remediation is not expressly identified in the Contract Documents as being within the scope of the Work, or if Contractor or anyone for whom Contractor is responsible creates a Hazardous Environmental Condition, then Contractor shall immediately: (1) secure or otherwise isolate such condition; (2) stop all Work in connection with such condition and in any area affected thereby (except in an emergency as required by Paragraph 7.15); and (3) notify Owner and Engineer (and promptly thereafter confirm such notice in writing). Owner shall promptly consult with Engineer concerning the necessity for Owner to retain a qualified expert to evaluate such condition or take corrective action, if any. Promptly after consulting with Engineer, Owner shall take such actions as are necessary to permit Owner to timely obtain required permits and provide Contractor the written notice required by Paragraph 5.06.F. If Contractor or anyone for whom Contractor is responsible created the Hazardous Environmental Condition in question, then Owner may remove and remediate the Hazardous Environmental Condition, and impose a set-off against payments to account for the associated costs.

F. Contractor shall not resume Work in connection with such Hazardous Environmental Condition or in any affected area until after Owner has obtained any required permits related thereto, and delivered written notice to Contractor either (1) specifying that such condition and any affected area is or has been rendered safe for the resumption of Work, or (2) specifying any special conditions under which such Work may be resumed safely.

G. If Owner and Contractor cannot agree as to entitlement to or on the amount or extent, if any, of any adjustment in Contract Price or Contract Times, as a result of such Work stoppage, such special conditions under which Work is agreed to be resumed by Contractor, or any costs or expenses incurred in response to the Hazardous Environmental Condition, then within 30 days of Owner's written notice regarding the resumption of Work, Contractor may submit a Change Proposal, or Owner may impose a set-off. Entitlement to any such adjustment is subject to the provisions of Paragraphs 4.05.D, 4.05.E, 11.07, and 11.08.

H. If, after receipt of such written notice, Contractor does not agree to resume such Work based on a reasonable belief it is unsafe, or does not agree to resume such Work under such special


**Copyright© 2018 National Society of Professional Engineers, American Council of Engineering Companies, and American Society of Civil Engineers. All rights reserved.**

conditions, then Owner may order the portion of the Work that is in the area affected by such condition to be deleted from the Work, following the contractual change procedures in Article 11. Owner may have such deleted portion of the Work performed by Owner's own forces or others in accordance with Article 8.

I. To the fullest extent permitted by Laws and Regulations, Owner shall indemnify and hold harmless Contractor, Subcontractors, and Engineer, and the officers, directors, members, partners, employees, agents, consultants, and subcontractors of each and any of them, from and against all claims, costs, losses, and damages (including but not limited to all fees and charges of engineers, architects, attorneys, and other professionals, and all court, arbitration, or other dispute resolution costs) arising out of or relating to a Hazardous Environmental Condition, provided that such Hazardous Environmental Condition (1) was not shown or indicated in the Drawings, Specifications, or other Contract Documents, identified as Technical Data entitled to limited reliance pursuant to Paragraph 5.06.B, or identified in the Contract Documents to be included within the scope of the Work, and (2) was not created by Contractor or by anyone for whom Contractor is responsible. Nothing in this Paragraph 5.06.I obligates Owner to indemnify any individual or entity from and against the consequences of that individual's or entity's own negligence.

J. To the fullest extent permitted by Laws and Regulations, Contractor shall indemnify and hold harmless Owner and Engineer, and the officers, directors, members, partners, employees, agents, consultants, and subcontractors of each and any of them, from and against all claims, costs, losses, and damages (including but not limited to all fees and charges of engineers, architects, attorneys, and other professionals and all court or arbitration or other dispute resolution costs) arising out of or relating to the failure to control, contain, or remove a Constituent of Concern brought to the Site by Contractor or by anyone for whom Contractor is responsible, or to a Hazardous Environmental Condition created by Contractor or by anyone for whom Contractor is responsible. Nothing in this Paragraph 5.06.J obligates Contractor to indemnify any individual or entity from and against the consequences of that individual's or entity's own negligence.

K. The provisions of Paragraphs 5.03, 5.04, and 5.05 do not apply to the presence of Constituents of Concern or to a Hazardous Environmental Condition uncovered or revealed at the Site.

## ARTICLE 6—BONDS AND INSURANCE

6.01 *Performance, Payment, and Other Bonds*

A. Contractor shall furnish a performance bond and a payment bond, each in an amount at least equal to the Contract Price, as security for the faithful performance and payment of Contractor's obligations under the Contract. These bonds must remain in effect until one year after the date when final payment becomes due or until completion of the correction period specified in Paragraph 15.08, whichever is later, except as provided otherwise by Laws or Regulations, the terms of a prescribed bond form, the Supplementary Conditions, or other provisions of the Contract.

B. Contractor shall also furnish such other bonds (if any) as are required by the Supplementary Conditions or other provisions of the Contract.

C. All bonds must be in the form included in the Bidding Documents or otherwise specified by Owner prior to execution of the Contract, except as provided otherwise by Laws or


**Copyright© 2018 National Society of Professional Engineers, American Council of Engineering Companies, and American Society of Civil Engineers. All rights reserved.**

Regulations, and must be issued and signed by a surety named in "Companies Holding Certificates of Authority as Acceptable Sureties on Federal Bonds and as Acceptable Reinsuring Companies" as published in Department Circular 570 (as amended and supplemented) by the Bureau of the Fiscal Service, U.S. Department of the Treasury. A bond signed by an agent or attorney-in-fact must be accompanied by a certified copy of that individual's authority to bind the surety. The evidence of authority must show that it is effective on the date the agent or attorney-in-fact signed the accompanying bond.

D. Contractor shall obtain the required bonds from surety companies that are duly licensed or authorized, in the state or jurisdiction in which the Project is located, to issue bonds in the required amounts.

E. If the surety on a bond furnished by Contractor is declared bankrupt or becomes insolvent, or the surety ceases to meet the requirements above, then Contractor shall promptly notify Owner and Engineer in writing and shall, within 20 days after the event giving rise to such notification, provide another bond and surety, both of which must comply with the bond and surety requirements above.

F. If Contractor has failed to obtain a required bond, Owner may exclude the Contractor from the Site and exercise Owner's termination rights under Article 16.

G. Upon request to Owner from any Subcontractor, Supplier, or other person or entity claiming to have furnished labor, services, materials, or equipment used in the performance of the Work, Owner shall provide a copy of the payment bond to such person or entity.

H. Upon request to Contractor from any Subcontractor, Supplier, or other person or entity claiming to have furnished labor, services, materials, or equipment used in the performance of the Work, Contractor shall provide a copy of the payment bond to such person or entity.

6.02 *Insurance—General Provisions*

A. Owner and Contractor shall obtain and maintain insurance as required in this article and in the Supplementary Conditions.

B. All insurance required by the Contract to be purchased and maintained by Owner or Contractor shall be obtained from insurance companies that are duly licensed or authorized in the state or jurisdiction in which the Project is located to issue insurance policies for the required limits and coverages. Unless a different standard is indicated in the Supplementary Conditions, all companies that provide insurance policies required under this Contract shall have an A.M. Best rating of A-VII or better.

C. Alternative forms of insurance coverage, including but not limited to self-insurance and "Occupational Accident and Excess Employer's Indemnity Policies," are not sufficient to meet the insurance requirements of this Contract, unless expressly allowed in the Supplementary Conditions.

D. Contractor shall deliver to Owner, with copies to each additional insured identified in the Contract, certificates of insurance and endorsements establishing that Contractor has obtained and is maintaining the policies and coverages required by the Contract. Upon request by Owner or any other insured, Contractor shall also furnish other evidence of such required insurance, including but not limited to copies of policies, documentation of applicable self-insured retentions (if allowed) and deductibles, full disclosure of all relevant exclusions, and evidence of insurance required to be purchased and maintained by


**Copyright© 2018 National Society of Professional Engineers, American Council of Engineering Companies, and American Society of Civil Engineers. All rights reserved.**

Subcontractors or Suppliers. In any documentation furnished under this provision, Contractor, Subcontractors, and Suppliers may block out (redact) (1) any confidential premium or pricing information and (2) any wording specific to a project or jurisdiction other than those applicable to this Contract.

E. Owner shall deliver to Contractor, with copies to each additional insured identified in the Contract, certificates of insurance and endorsements establishing that Owner has obtained and is maintaining the policies and coverages required of Owner by the Contract (if any). Upon request by Contractor or any other insured, Owner shall also provide other evidence of such required insurance (if any), including but not limited to copies of policies, documentation of applicable self-insured retentions (if allowed) and deductibles, and full disclosure of all relevant exclusions. In any documentation furnished under this provision, Owner may block out (redact) (1) any confidential premium or pricing information and (2) any wording specific to a project or jurisdiction other than those relevant to this Contract.

F. Failure of Owner or Contractor to demand such certificates or other evidence of the other party's full compliance with these insurance requirements, or failure of Owner or Contractor to identify a deficiency in compliance from the evidence provided, will not be construed as a waiver of the other party's obligation to obtain and maintain such insurance.

G. In addition to the liability insurance required to be provided by Contractor, the Owner, at Owner's option, may purchase and maintain Owner's own liability insurance. Owner's liability policies, if any, operate separately and independently from policies required to be provided by Contractor, and Contractor cannot rely upon Owner's liability policies for any of Contractor's obligations to the Owner, Engineer, or third parties.

H. Contractor shall require:

1. Subcontractors to purchase and maintain worker's compensation, commercial general liability, and other insurance that is appropriate for their participation in the Project, and to name as additional insureds Owner and Engineer (and any other individuals or entities identified in the Supplementary Conditions as additional insureds on Contractor's liability policies) on each Subcontractor's commercial general liability insurance policy; and

2. Suppliers to purchase and maintain insurance that is appropriate for their participation in the Project.

I. If either party does not purchase or maintain the insurance required of such party by the Contract, such party shall notify the other party in writing of such failure to purchase prior to the start of the Work, or of such failure to maintain prior to any change in the required coverage.

J. If Contractor has failed to obtain and maintain required insurance, Contractor's entitlement to enter or remain at the Site will end immediately, and Owner may impose an appropriate set-off against payment for any associated costs (including but not limited to the cost of purchasing necessary insurance coverage), and exercise Owner's termination rights under Article 16.

K. Without prejudice to any other right or remedy, if a party has failed to obtain required insurance, the other party may elect (but is in no way obligated) to obtain equivalent insurance to protect such other party's interests at the expense of the party who was required to provide such coverage, and the Contract Price will be adjusted accordingly.


**Copyright© 2018 National Society of Professional Engineers, American Council of Engineering Companies, and American Society of Civil Engineers. All rights reserved.**

L. Owner does not represent that insurance coverage and limits established in this Contract necessarily will be adequate to protect Contractor or Contractor's interests. Contractor is responsible for determining whether such coverage and limits are adequate to protect its interests, and for obtaining and maintaining any additional insurance that Contractor deems necessary.

M. The insurance and insurance limits required herein will not be deemed as a limitation on Contractor's liability, or that of its Subcontractors or Suppliers, under the indemnities granted to Owner and other individuals and entities in the Contract or otherwise.

N. All the policies of insurance required to be purchased and maintained under this Contract will contain a provision or endorsement that the coverage afforded will not be canceled, or renewal refused, until at least 10 days prior written notice has been given to the purchasing policyholder. Within three days of receipt of any such written notice, the purchasing policyholder shall provide a copy of the notice to each other insured and Engineer.

6.03 *Contractor's Insurance*

A. *Required Insurance*: Contractor shall purchase and maintain Worker's Compensation, Commercial General Liability, and other insurance pursuant to the specific requirements of the Supplementary Conditions.

B. *General Provisions*: The policies of insurance required by this Paragraph 6.03 as supplemented must:

1. include at least the specific coverages required;

2. be written for not less than the limits provided, or those required by Laws or Regulations, whichever is greater;

3. remain in effect at least until the Work is complete (as set forth in Paragraph 15.06.D), and longer if expressly required elsewhere in this Contract, and at all times thereafter when Contractor may be correcting, removing, or replacing defective Work as a warranty or correction obligation, or otherwise, or returning to the Site to conduct other tasks arising from the Contract;

4. apply with respect to the performance of the Work, whether such performance is by Contractor, any Subcontractor or Supplier, or by anyone directly or indirectly employed by any of them to perform any of the Work, or by anyone for whose acts any of them may be liable; and

5. include all necessary endorsements to support the stated requirements.

C. *Additional Insureds*: The Contractor's commercial general liability, automobile liability, employer's liability, umbrella or excess, pollution liability, and unmanned aerial vehicle liability policies, if required by this Contract, must:

1. include and list as additional insureds Owner and Engineer, and any individuals or entities identified as additional insureds in the Supplementary Conditions;

2. include coverage for the respective officers, directors, members, partners, employees, and consultants of all such additional insureds;

3. afford primary coverage to these additional insureds for all claims covered thereby (including as applicable those arising from both ongoing and completed operations);


**Copyright© 2018 National Society of Professional Engineers, American Council of Engineering Companies, and American Society of Civil Engineers. All rights reserved.**

4. not seek contribution from insurance maintained by the additional insured; and

5. as to commercial general liability insurance, apply to additional insureds with respect to liability caused in whole or in part by Contractor's acts or omissions, or the acts and omissions of those working on Contractor's behalf, in the performance of Contractor's operations.

6.04 *Builder's Risk and Other Property Insurance*

A. *Builder's Risk*: Unless otherwise provided in the Supplementary Conditions, Contractor shall purchase and maintain builder's risk insurance upon the Work on a completed value basis, in the amount of the Work's full insurable replacement cost (subject to such deductible amounts as may be provided in the Supplementary Conditions or required by Laws and Regulations). The specific requirements applicable to the builder's risk insurance are set forth in the Supplementary Conditions.

B. *Property Insurance for Facilities of Owner Where Work Will Occur*: Owner is responsible for obtaining and maintaining property insurance covering each existing structure, building, or facility in which any part of the Work will occur, or to which any part of the Work will attach or be adjoined. Such property insurance will be written on a special perils (all-risk) form, on a replacement cost basis, providing coverage consistent with that required for the builder's risk insurance, and will be maintained until the Work is complete, as set forth in Paragraph 15.06.D.

C. *Property Insurance for Substantially Complete Facilities*: Promptly after Substantial Completion, and before actual occupancy or use of the substantially completed Work, Owner will obtain property insurance for such substantially completed Work, and maintain such property insurance at least until the Work is complete, as set forth in Paragraph 15.06.D. Such property insurance will be written on a special perils (all-risk) form, on a replacement cost basis, and provide coverage consistent with that required for the builder's risk insurance. The builder's risk insurance may terminate upon written confirmation of Owner's procurement of such property insurance.

D. *Partial Occupancy or Use by Owner*: If Owner will occupy or use a portion or portions of the Work prior to Substantial Completion of all the Work, as provided in Paragraph 15.04, then Owner (directly, if it is the purchaser of the builder's risk policy, or through Contractor) will provide advance notice of such occupancy or use to the builder's risk insurer, and obtain an endorsement consenting to the continuation of coverage prior to commencing such partial occupancy or use.

E. *Insurance of Other Property; Additional Insurance*: If the express insurance provisions of the Contract do not require or address the insurance of a property item or interest, then the entity or individual owning such property item will be responsible for insuring it. If Contractor elects to obtain other special insurance to be included in or supplement the builder's risk or property insurance policies provided under this Paragraph 6.04, it may do so at Contractor's expense.

6.05 *Property Losses; Subrogation*

A. The builder's risk insurance policy purchased and maintained in accordance with Paragraph 6.04 (or an installation floater policy if authorized by the Supplementary Conditions), will contain provisions to the effect that in the event of payment of any loss or damage the insurer will have no rights of recovery against any insureds thereunder, or against


**Copyright© 2018 National Society of Professional Engineers, American Council of Engineering Companies, and American Society of Civil Engineers. All rights reserved.**

Engineer or its consultants, or their officers, directors, members, partners, employees, agents, consultants, or subcontractors.

1. Owner and Contractor waive all rights against each other and the respective officers, directors, members, partners, employees, agents, consultants, and subcontractors of each and any of them, for all losses and damages caused by, arising out of, or resulting from any of the perils, risks, or causes of loss covered by such policies and any other property insurance applicable to the Work; and, in addition, waive all such rights against Engineer, its consultants, all individuals or entities identified in the Supplementary Conditions as builder's risk or installation floater insureds, and the officers, directors, members, partners, employees, agents, consultants, and subcontractors of each and any of them, under such policies for losses and damages so caused.
2. None of the above waivers extends to the rights that any party making such waiver may have to the proceeds of insurance held by Owner or Contractor as trustee or fiduciary, or otherwise payable under any policy so issued.

B. Any property insurance policy maintained by Owner covering any loss, damage, or consequential loss to Owner's existing structures, buildings, or facilities in which any part of the Work will occur, or to which any part of the Work will attach or adjoin; to adjacent structures, buildings, or facilities of Owner; or to part or all of the completed or substantially completed Work, during partial occupancy or use pursuant to Paragraph 15.04, after Substantial Completion pursuant to Paragraph 15.03, or after final payment pursuant to Paragraph 15.06, will contain provisions to the effect that in the event of payment of any loss or damage the insurer will have no rights of recovery against any insureds thereunder, or against Contractor, Subcontractors, or Engineer, or the officers, directors, members, partners, employees, agents, consultants, or subcontractors of each and any of them, and that the insured is allowed to waive the insurer's rights of subrogation in a written contract executed prior to the loss, damage, or consequential loss.

1. Owner waives all rights against Contractor, Subcontractors, and Engineer, and the officers, directors, members, partners, employees, agents, consultants and subcontractors of each and any of them, for all losses and damages caused by, arising out of, or resulting from fire or any of the perils, risks, or causes of loss covered by such policies.

C. The waivers in this Paragraph 6.05 include the waiver of rights due to business interruption, loss of use, or other consequential loss extending beyond direct physical loss or damage to Owner's property or the Work caused by, arising out of, or resulting from fire or other insured peril, risk, or cause of loss.

D. Contractor shall be responsible for assuring that each Subcontract contains provisions whereby the Subcontractor waives all rights against Owner, Contractor, all individuals or entities identified in the Supplementary Conditions as insureds, the Engineer and its consultants, and the officers, directors, members, partners, employees, agents, consultants, and subcontractors of each and any of them, for all losses and damages caused by, arising out of, relating to, or resulting from fire or other peril, risk, or cause of loss covered by builder's risk insurance, installation floater, and any other property insurance applicable to the Work.


**Copyright© 2018 National Society of Professional Engineers, American Council of Engineering Companies, and American Society of Civil Engineers. All rights reserved.**

6.06 *Receipt and Application of Property Insurance Proceeds*

A. Any insured loss under the builder's risk and other policies of property insurance required by Paragraph 6.04 will be adjusted and settled with the named insured that purchased the policy. Such named insured shall act as fiduciary for the other insureds, and give notice to such other insureds that adjustment and settlement of a claim is in progress. Any other insured may state its position regarding a claim for insured loss in writing within 15 days after notice of such claim.

B. Proceeds for such insured losses may be made payable by the insurer either jointly to multiple insureds, or to the named insured that purchased the policy in its own right and as fiduciary for other insureds, subject to the requirements of any applicable mortgage clause. A named insured receiving insurance proceeds under the builder's risk and other policies of insurance required by Paragraph 6.04 shall maintain such proceeds in a segregated account, and distribute such proceeds in accordance with such agreement as the parties in interest may reach, or as otherwise required under the dispute resolution provisions of this Contract or applicable Laws and Regulations.

C. If no other special agreement is reached, Contractor shall repair or replace the damaged Work, using allocated insurance proceeds.

**ARTICLE 7—CONTRACTOR'S RESPONSIBILITIES**

7.01 *Contractor's Means and Methods of Construction*

A. Contractor shall be solely responsible for the means, methods, techniques, sequences, and procedures of construction.

B. If the Contract Documents note, or Contractor determines, that professional engineering or other design services are needed to carry out Contractor's responsibilities for construction means, methods, techniques, sequences, and procedures, or for Site safety, then Contractor shall cause such services to be provided by a properly licensed design professional, at Contractor's expense. Such services are not Owner-delegated professional design services under this Contract, and neither Owner nor Engineer has any responsibility with respect to (1) Contractor's determination of the need for such services, (2) the qualifications or licensing of the design professionals retained or employed by Contractor, (3) the performance of such services, or (4) any errors, omissions, or defects in such services.

7.02 *Supervision and Superintendence*

A. Contractor shall supervise, inspect, and direct the Work competently and efficiently, devoting such attention thereto and applying such skills and expertise as may be necessary to perform the Work in accordance with the Contract Documents.

B. At all times during the progress of the Work, Contractor shall assign a competent resident superintendent who will not be replaced without written notice to Owner and Engineer except under extraordinary circumstances.

7.03 *Labor; Working Hours*

A. Contractor shall provide competent, suitably qualified personnel to survey and lay out the Work and perform construction as required by the Contract Documents. Contractor shall maintain good discipline and order at the Site.


**Copyright© 2018 National Society of Professional Engineers, American Council of Engineering Companies, and American Society of Civil Engineers. All rights reserved.**

B. Contractor shall be fully responsible to Owner and Engineer for all acts and omissions of Contractor's employees; of Suppliers and Subcontractors, and their employees; and of any other individuals or entities performing or furnishing any of the Work, just as Contractor is responsible for Contractor's own acts and omissions.

C. Except as otherwise required for the safety or protection of persons or the Work or property at the Site or adjacent thereto, and except as otherwise stated in the Contract Documents, all Work at the Site will be performed during regular working hours, Monday through Friday. Contractor will not perform Work on a Saturday, Sunday, or any legal holiday. Contractor may perform Work outside regular working hours or on Saturdays, Sundays, or legal holidays only with Owner's written consent, which will not be unreasonably withheld.

7.04 *Services, Materials, and Equipment*

A. Unless otherwise specified in the Contract Documents, Contractor shall provide and assume full responsibility for all services, materials, equipment, labor, transportation, construction equipment and machinery, tools, appliances, fuel, power, light, heat, telephone, water, sanitary facilities, temporary facilities, and all other facilities and incidentals necessary for the performance, testing, start up, and completion of the Work, whether or not such items are specifically called for in the Contract Documents.

B. All materials and equipment incorporated into the Work must be new and of good quality, except as otherwise provided in the Contract Documents. All special warranties and guarantees required by the Specifications will expressly run to the benefit of Owner. If required by Engineer, Contractor shall furnish satisfactory evidence (including reports of required tests) as to the source, kind, and quality of materials and equipment.

C. All materials and equipment must be stored, applied, installed, connected, erected, protected, used, cleaned, and conditioned in accordance with instructions of the applicable Supplier, except as otherwise may be provided in the Contract Documents.

7.05 *"Or Equals"*

A. *Contractor's Request; Governing Criteria*: Whenever an item of equipment or material is specified or described in the Contract Documents by using the names of one or more proprietary items or specific Suppliers, the Contract Price has been based upon Contractor furnishing such item as specified. The specification or description of such an item is intended to establish the type, function, appearance, and quality required. Unless the specification or description contains or is followed by words reading that no like, equivalent, or "or equal" item is permitted, Contractor may request that Engineer authorize the use of other items of equipment or material, or items from other proposed Suppliers, under the circumstances described below.

1. If Engineer in its sole discretion determines that an item of equipment or material proposed by Contractor is functionally equal to that named and sufficiently similar so that no change in related Work will be required, Engineer will deem it an "or equal" item. For the purposes of this paragraph, a proposed item of equipment or material will be considered functionally equal to an item so named if:

a. in the exercise of reasonable judgment Engineer determines that the proposed item:

1) is at least equal in materials of construction, quality, durability, appearance, strength, and design characteristics;


**Copyright© 2018 National Society of Professional Engineers, American Council of Engineering Companies, and American Society of Civil Engineers. All rights reserved.**

2) will reliably perform at least equally well the function and achieve the results imposed by the design concept of the completed Project as a functioning whole;

3) has a proven record of performance and availability of responsive service; and

4) is not objectionable to Owner.

b. Contractor certifies that, if the proposed item is approved and incorporated into the Work:

1) there will be no increase in cost to the Owner or increase in Contract Times; and

2) the item will conform substantially to the detailed requirements of the item named in the Contract Documents.

B. *Contractor's Expense*: Contractor shall provide all data in support of any proposed "or equal" item at Contractor's expense.

C. *Engineer's Evaluation and Determination*: Engineer will be allowed a reasonable time to evaluate each "or-equal" request. Engineer may require Contractor to furnish additional data about the proposed "or-equal" item. Engineer will be the sole judge of acceptability. No "or-equal" item will be ordered, furnished, installed, or utilized until Engineer's review is complete and Engineer determines that the proposed item is an "or-equal," which will be evidenced by an approved Shop Drawing or other written communication. Engineer will advise Contractor in writing of any negative determination.

D. *Effect of Engineer's Determination*: Neither approval nor denial of an "or-equal" request will result in any change in Contract Price. The Engineer's denial of an "or-equal" request will be final and binding, and may not be reversed through an appeal under any provision of the Contract.

E. *Treatment as a Substitution Request*: If Engineer determines that an item of equipment or material proposed by Contractor does not qualify as an "or-equal" item, Contractor may request that Engineer consider the item a proposed substitute pursuant to Paragraph 7.06.

7.06 *Substitutes*

A. *Contractor's Request; Governing Criteria*: Unless the specification or description of an item of equipment or material required to be furnished under the Contract Documents contains or is followed by words reading that no substitution is permitted, Contractor may request that Engineer authorize the use of other items of equipment or material under the circumstances described below. To the extent possible such requests must be made before commencement of related construction at the Site.

1. Contractor shall submit sufficient information as provided below to allow Engineer to determine if the item of material or equipment proposed is functionally equivalent to that named and an acceptable substitute therefor. Engineer will not accept requests for review of proposed substitute items of equipment or material from anyone other than Contractor.

2. The requirements for review by Engineer will be as set forth in Paragraph 7.06.B, as supplemented by the Specifications, and as Engineer may decide is appropriate under the circumstances.


**Copyright© 2018 National Society of Professional Engineers, American Council of Engineering Companies, and American Society of Civil Engineers. All rights reserved.**

3. Contractor shall make written application to Engineer for review of a proposed substitute item of equipment or material that Contractor seeks to furnish or use. The application:

    a. will certify that the proposed substitute item will:

        1) perform adequately the functions and achieve the results called for by the general design;

        2) be similar in substance to the item specified; and

        3) be suited to the same use as the item specified.

    b. will state:

        1) the extent, if any, to which the use of the proposed substitute item will necessitate a change in Contract Times;

        2) whether use of the proposed substitute item in the Work will require a change in any of the Contract Documents (or in the provisions of any other direct contract with Owner for other work on the Project) to adapt the design to the proposed substitute item; and

        3) whether incorporation or use of the proposed substitute item in connection with the Work is subject to payment of any license fee or royalty.

    c. will identify:

        1) all variations of the proposed substitute item from the item specified; and

        2) available engineering, sales, maintenance, repair, and replacement services.

    d. will contain an itemized estimate of all costs or credits that will result directly or indirectly from use of such substitute item, including but not limited to changes in Contract Price, shared savings, costs of redesign, and claims of other contractors affected by any resulting change.

B. *Engineer's Evaluation and Determination*: Engineer will be allowed a reasonable time to evaluate each substitute request, and to obtain comments and direction from Owner. Engineer may require Contractor to furnish additional data about the proposed substitute item. Engineer will be the sole judge of acceptability. No substitute will be ordered, furnished, installed, or utilized until Engineer's review is complete and Engineer determines that the proposed item is an acceptable substitute. Engineer's determination will be evidenced by a Field Order or a proposed Change Order accounting for the substitution itself and all related impacts, including changes in Contract Price or Contract Times. Engineer will advise Contractor in writing of any negative determination.

C. *Special Guarantee*: Owner may require Contractor to furnish at Contractor's expense a special performance guarantee or other surety with respect to any substitute.

D. *Reimbursement of Engineer's Cost*: Engineer will record Engineer's costs in evaluating a substitute proposed or submitted by Contractor. Whether or not Engineer approves a substitute so proposed or submitted by Contractor, Contractor shall reimburse Owner for the reasonable charges of Engineer for evaluating each such proposed substitute. Contractor shall also reimburse Owner for the reasonable charges of Engineer for making changes in the Contract Documents (or in the provisions of any other direct contract with Owner) resulting from the acceptance of each proposed substitute.


**Copyright© 2018 National Society of Professional Engineers, American Council of Engineering Companies, and American Society of Civil Engineers. All rights reserved.**

E. *Contractor's Expense*: Contractor shall provide all data in support of any proposed substitute at Contractor's expense.

F. *Effect of Engineer's Determination*: If Engineer approves the substitution request, Contractor shall execute the proposed Change Order and proceed with the substitution. The Engineer's denial of a substitution request will be final and binding, and may not be reversed through an appeal under any provision of the Contract. Contractor may challenge the scope of reimbursement costs imposed under Paragraph 7.06.D, by timely submittal of a Change Proposal.

7.07 *Concerning Subcontractors and Suppliers*

A. Contractor may retain Subcontractors and Suppliers for the performance of parts of the Work. Such Subcontractors and Suppliers must be acceptable to Owner. The Contractor's retention of a Subcontractor or Supplier for the performance of parts of the Work will not relieve Contractor's obligation to Owner to perform and complete the Work in accordance with the Contract Documents.

B. Contractor shall retain specific Subcontractors and Suppliers for the performance of designated parts of the Work if required by the Contract to do so.

C. Subsequent to the submittal of Contractor's Bid or final negotiation of the terms of the Contract, Owner may not require Contractor to retain any Subcontractor or Supplier to furnish or perform any of the Work against which Contractor has reasonable objection.

D. Prior to entry into any binding subcontract or purchase order, Contractor shall submit to Owner the identity of the proposed Subcontractor or Supplier (unless Owner has already deemed such proposed Subcontractor or Supplier acceptable during the bidding process or otherwise). Such proposed Subcontractor or Supplier shall be deemed acceptable to Owner unless Owner raises a substantive, reasonable objection within 5 days.

E. Owner may require the replacement of any Subcontractor or Supplier. Owner also may require Contractor to retain specific replacements; provided, however, that Owner may not require a replacement to which Contractor has a reasonable objection. If Contractor has submitted the identity of certain Subcontractors or Suppliers for acceptance by Owner, and Owner has accepted it (either in writing or by failing to make written objection thereto), then Owner may subsequently revoke the acceptance of any such Subcontractor or Supplier so identified solely on the basis of substantive, reasonable objection after due investigation. Contractor shall submit an acceptable replacement for the rejected Subcontractor or Supplier.

F. If Owner requires the replacement of any Subcontractor or Supplier retained by Contractor to perform any part of the Work, then Contractor shall be entitled to an adjustment in Contract Price or Contract Times, with respect to the replacement; and Contractor shall initiate a Change Proposal for such adjustment within 30 days of Owner's requirement of replacement.

G. No acceptance by Owner of any such Subcontractor or Supplier, whether initially or as a replacement, will constitute a waiver of the right of Owner to the completion of the Work in accordance with the Contract Documents.


**Copyright© 2018 National Society of Professional Engineers, American Council of Engineering Companies, and American Society of Civil Engineers. All rights reserved.**

H. On a monthly basis, Contractor shall submit to Engineer a complete list of all Subcontractors and Suppliers having a direct contract with Contractor, and of all other Subcontractors and Suppliers known to Contractor at the time of submittal.

I. Contractor shall be solely responsible for scheduling and coordinating the work of Subcontractors and Suppliers.

J. The divisions and sections of the Specifications and the identifications of any Drawings do not control Contractor in dividing the Work among Subcontractors or Suppliers, or in delineating the Work to be performed by any specific trade.

K. All Work performed for Contractor by a Subcontractor or Supplier must be pursuant to an appropriate contractual agreement that specifically binds the Subcontractor or Supplier to the applicable terms and conditions of the Contract for the benefit of Owner and Engineer.

L. Owner may furnish to any Subcontractor or Supplier, to the extent practicable, information about amounts paid to Contractor for Work performed for Contractor by the Subcontractor or Supplier.

M. Contractor shall restrict all Subcontractors and Suppliers from communicating with Engineer or Owner, except through Contractor or in case of an emergency, or as otherwise expressly allowed in this Contract.

7.08 *Patent Fees and Royalties*

A. Contractor shall pay all license fees and royalties and assume all costs incident to the use in the performance of the Work or the incorporation in the Work of any invention, design, process, product, or device which is the subject of patent rights or copyrights held by others. If an invention, design, process, product, or device is specified in the Contract Documents for use in the performance of the Work and if, to the actual knowledge of Owner or Engineer, its use is subject to patent rights or copyrights calling for the payment of any license fee or royalty to others, the existence of such rights will be disclosed in the Contract Documents.

B. To the fullest extent permitted by Laws and Regulations, Owner shall indemnify and hold harmless Contractor, and its officers, directors, members, partners, employees, agents, consultants, and subcontractors, from and against all claims, costs, losses, and damages (including but not limited to all fees and charges of engineers, architects, attorneys, and other professionals, and all court or arbitration or other dispute resolution costs) arising out of or relating to any infringement of patent rights or copyrights incident to the use in the performance of the Work or resulting from the incorporation in the Work of any invention, design, process, product, or device specified in the Contract Documents, but not identified as being subject to payment of any license fee or royalty to others required by patent rights or copyrights.

C. To the fullest extent permitted by Laws and Regulations, Contractor shall indemnify and hold harmless Owner and Engineer, and the officers, directors, members, partners, employees, agents, consultants and subcontractors of each and any of them, from and against all claims, costs, losses, and damages (including but not limited to all fees and charges of engineers, architects, attorneys, and other professionals and all court or arbitration or other dispute resolution costs) arising out of or relating to any infringement of patent rights or copyrights incident to the use in the performance of the Work or resulting from the incorporation in the Work of any invention, design, process, product, or device not specified in the Contract Documents.


**Copyright© 2018 National Society of Professional Engineers, American Council of Engineering Companies, and American Society of Civil Engineers. All rights reserved.**

7.09 *Permits*

A. Unless otherwise provided in the Contract Documents, Contractor shall obtain and pay for all construction permits, licenses, and certificates of occupancy. Owner shall assist Contractor, when necessary, in obtaining such permits and licenses. Contractor shall pay all governmental charges and inspection fees necessary for the prosecution of the Work which are applicable at the time of the submission of Contractor's Bid (or when Contractor became bound under a negotiated contract). Owner shall pay all charges of utility owners for connections for providing permanent service to the Work.

7.10 *Taxes*

A. Contractor shall pay all sales, consumer, use, and other similar taxes required to be paid by Contractor in accordance with the Laws and Regulations of the place of the Project which are applicable during the performance of the Work.

7.11 *Laws and Regulations*

A. Contractor shall give all notices required by and shall comply with all Laws and Regulations applicable to the performance of the Work. Neither Owner nor Engineer shall be responsible for monitoring Contractor's compliance with any Laws or Regulations.

B. If Contractor performs any Work or takes any other action knowing or having reason to know that it is contrary to Laws or Regulations, Contractor shall bear all resulting costs and losses, and shall indemnify and hold harmless Owner and Engineer, and the officers, directors, members, partners, employees, agents, consultants, and subcontractors of each and any of them, from and against all claims, costs, losses, and damages (including but not limited to all fees and charges of engineers, architects, attorneys, and other professionals and all court or arbitration or other dispute resolution costs) arising out of or relating to such Work or other action. It is not Contractor's responsibility to make certain that the Work described in the Contract Documents is in accordance with Laws and Regulations, but this does not relieve Contractor of its obligations under Paragraph 3.03.

C. Owner or Contractor may give written notice to the other party of any changes after the submission of Contractor's Bid (or after the date when Contractor became bound under a negotiated contract) in Laws or Regulations having an effect on the cost or time of performance of the Work, including but not limited to changes in Laws or Regulations having an effect on procuring permits and on sales, use, value-added, consumption, and other similar taxes. If Owner and Contractor are unable to agree on entitlement to or on the amount or extent, if any, of any adjustment in Contract Price or Contract Times resulting from such changes, then within 30 days of such written notice Contractor may submit a Change Proposal, or Owner may initiate a Claim.

7.12 *Record Documents*

A. Contractor shall maintain in a safe place at the Site one printed record copy of all Drawings, Specifications, Addenda, Change Orders, Work Change Directives, Field Orders, written interpretations and clarifications, and approved Shop Drawings. Contractor shall keep such record documents in good order and annotate them to show changes made during construction. These record documents, together with all approved Samples, will be available to Engineer for reference. Upon completion of the Work, Contractor shall deliver these record documents to Engineer.


**Copyright© 2018 National Society of Professional Engineers, American Council of Engineering Companies, and American Society of Civil Engineers. All rights reserved.**

7.13 *Safety and Protection*

A. Contractor shall be solely responsible for initiating, maintaining, and supervising all safety precautions and programs in connection with the Work. Such responsibility does not relieve Subcontractors of their responsibility for the safety of persons or property in the performance of their work, nor for compliance with applicable safety Laws and Regulations.

B. Contractor shall designate a qualified and experienced safety representative whose duties and responsibilities are the prevention of Work-related accidents and the maintenance and supervision of safety precautions and programs.

C. Contractor shall take all necessary precautions for the safety of, and shall provide the necessary protection to prevent damage, injury, or loss to:

1. all persons on the Site or who may be affected by the Work;

2. all the Work and materials and equipment to be incorporated therein, whether in storage on or off the Site; and

3. other property at the Site or adjacent thereto, including trees, shrubs, lawns, walks, pavements, roadways, structures, other work in progress, utilities, and Underground Facilities not designated for removal, relocation, or replacement in the course of construction.

D. All damage, injury, or loss to any property referred to in Paragraph 7.13.C.2 or 7.13.C.3 caused, directly or indirectly, in whole or in part, by Contractor, any Subcontractor, Supplier, or any other individual or entity directly or indirectly employed by any of them to perform any of the Work, or anyone for whose acts any of them may be liable, shall be remedied by Contractor at its expense (except damage or loss attributable to the fault of Drawings or Specifications or to the acts or omissions of Owner or Engineer or anyone employed by any of them, or anyone for whose acts any of them may be liable, and not attributable, directly or indirectly, in whole or in part, to the fault or negligence of Contractor or any Subcontractor, Supplier, or other individual or entity directly or indirectly employed by any of them).

E. Contractor shall comply with all applicable Laws and Regulations relating to the safety of persons or property, or to the protection of persons or property from damage, injury, or loss; and shall erect and maintain all necessary safeguards for such safety and protection.

F. Contractor shall notify Owner; the owners of adjacent property; the owners of Underground Facilities and other utilities (if the identity of such owners is known to Contractor); and other contractors and utility owners performing work at or adjacent to the Site, in writing, when Contractor knows that prosecution of the Work may affect them, and shall cooperate with them in the protection, removal, relocation, and replacement of their property or work in progress.

G. Contractor shall comply with the applicable requirements of Owner's safety programs, if any. Any Owner's safety programs that are applicable to the Work are identified or included in the Supplementary Conditions or Specifications.

H. Contractor shall inform Owner and Engineer of the specific requirements of Contractor's safety program with which Owner's and Engineer's employees and representatives must comply while at the Site.


**Copyright© 2018 National Society of Professional Engineers, American Council of Engineering Companies, and American Society of Civil Engineers. All rights reserved.**

I. Contractor's duties and responsibilities for safety and protection will continue until all the Work is completed, Engineer has issued a written notice to Owner and Contractor in accordance with Paragraph 15.06.C that the Work is acceptable, and Contractor has left the Site (except as otherwise expressly provided in connection with Substantial Completion).

J. Contractor's duties and responsibilities for safety and protection will resume whenever Contractor or any Subcontractor or Supplier returns to the Site to fulfill warranty or correction obligations, or to conduct other tasks arising from the Contract Documents.

7.14 *Hazard Communication Programs*

A. Contractor shall be responsible for coordinating any exchange of safety data sheets (formerly known as material safety data sheets) or other hazard communication information required to be made available to or exchanged between or among employers at the Site in accordance with Laws or Regulations.

7.15 *Emergencies*

A. In emergencies affecting the safety or protection of persons or the Work or property at the Site or adjacent thereto, Contractor is obligated to act to prevent damage, injury, or loss. Contractor shall give Engineer prompt written notice if Contractor believes that any significant changes in the Work or variations from the Contract Documents have been caused by an emergency, or are required as a result of Contractor's response to an emergency. If Engineer determines that a change in the Contract Documents is required because of an emergency or Contractor's response, a Work Change Directive or Change Order will be issued.

7.16 *Submittals*

A. *Shop Drawing and Sample Requirements*

1. Before submitting a Shop Drawing or Sample, Contractor shall:

a. review and coordinate the Shop Drawing or Sample with other Shop Drawings and Samples and with the requirements of the Work and the Contract Documents;

b. determine and verify:

1) all field measurements, quantities, dimensions, specified performance and design criteria, installation requirements, materials, catalog numbers, and similar information with respect to the Submittal;

2) the suitability of all materials and equipment offered with respect to the indicated application, fabrication, shipping, handling, storage, assembly, and installation pertaining to the performance of the Work; and

3) all information relative to Contractor's responsibilities for means, methods, techniques, sequences, and procedures of construction, and safety precautions and programs incident thereto;

c. confirm that the Submittal is complete with respect to all related data included in the Submittal.

2. Each Shop Drawing or Sample must bear a stamp or specific written certification that Contractor has satisfied Contractor's obligations under the Contract Documents with respect to Contractor's review of that Submittal, and that Contractor approves the Submittal.


**Copyright© 2018 National Society of Professional Engineers, American Council of Engineering Companies, and American Society of Civil Engineers. All rights reserved.**

3. With each Shop Drawing or Sample, Contractor shall give Engineer specific written notice of any variations that the Submittal may have from the requirements of the Contract Documents. This notice must be set forth in a written communication separate from the Submittal; and, in addition, in the case of a Shop Drawing by a specific notation made on the Shop Drawing itself.

B. *Submittal Procedures for Shop Drawings and Samples*: Contractor shall label and submit Shop Drawings and Samples to Engineer for review and approval in accordance with the accepted Schedule of Submittals.

1. *Shop Drawings*

a. Contractor shall submit the number of copies required in the Specifications.

b. Data shown on the Shop Drawings must be complete with respect to quantities, dimensions, specified performance and design criteria, materials, and similar data to show Engineer the services, materials, and equipment Contractor proposes to provide, and to enable Engineer to review the information for the limited purposes required by Paragraph 7.16.C.

2. *Samples*

a. Contractor shall submit the number of Samples required in the Specifications.

b. Contractor shall clearly identify each Sample as to material, Supplier, pertinent data such as catalog numbers, the use for which intended and other data as Engineer may require to enable Engineer to review the Submittal for the limited purposes required by Paragraph 7.16.C.

3. Where a Shop Drawing or Sample is required by the Contract Documents or the Schedule of Submittals, any related Work performed prior to Engineer's review and approval of the pertinent submittal will be at the sole expense and responsibility of Contractor.

C. *Engineer's Review of Shop Drawings and Samples*

1. Engineer will provide timely review of Shop Drawings and Samples in accordance with the accepted Schedule of Submittals. Engineer's review and approval will be only to determine if the items covered by the Submittals will, after installation or incorporation in the Work, comply with the requirements of the Contract Documents, and be compatible with the design concept of the completed Project as a functioning whole as indicated by the Contract Documents.

2. Engineer's review and approval will not extend to means, methods, techniques, sequences, or procedures of construction, or to safety precautions or programs incident thereto.

3. Engineer's review and approval of a separate item as such will not indicate approval of the assembly in which the item functions.

4. Engineer's review and approval of a Shop Drawing or Sample will not relieve Contractor from responsibility for any variation from the requirements of the Contract Documents unless Contractor has complied with the requirements of Paragraph 7.16.A.3 and Engineer has given written approval of each such variation by specific written notation thereof incorporated in or accompanying the Shop Drawing or Sample. Engineer will


**Copyright© 2018 National Society of Professional Engineers, American Council of Engineering Companies, and American Society of Civil Engineers. All rights reserved.**

document any such approved variation from the requirements of the Contract Documents in a Field Order or other appropriate Contract modification.

5. Engineer's review and approval of a Shop Drawing or Sample will not relieve Contractor from responsibility for complying with the requirements of Paragraphs 7.16.A and B.

6. Engineer's review and approval of a Shop Drawing or Sample, or of a variation from the requirements of the Contract Documents, will not, under any circumstances, change the Contract Times or Contract Price, unless such changes are included in a Change Order.

7. Neither Engineer's receipt, review, acceptance, or approval of a Shop Drawing or Sample will result in such item becoming a Contract Document.

8. Contractor shall perform the Work in compliance with the requirements and commitments set forth in approved Shop Drawings and Samples, subject to the provisions of Paragraph 7.16.C.4.

D. *Resubmittal Procedures for Shop Drawings and Samples*

1. Contractor shall make corrections required by Engineer and shall return the required number of corrected copies of Shop Drawings and submit, as required, new Samples for review and approval. Contractor shall direct specific attention in writing to revisions other than the corrections called for by Engineer on previous Submittals.

2. Contractor shall furnish required Shop Drawing and Sample submittals with sufficient information and accuracy to obtain required approval of an item with no more than two resubmittals. Engineer will record Engineer's time for reviewing a third or subsequent resubmittal of a Shop Drawing or Sample, and Contractor shall be responsible for Engineer's charges to Owner for such time. Owner may impose a set-off against payments due Contractor to secure reimbursement for such charges.

3. If Contractor requests a change of a previously approved Shop Drawing or Sample, Contractor shall be responsible for Engineer's charges to Owner for its review time, and Owner may impose a set-off against payments due Contractor to secure reimbursement for such charges, unless the need for such change is beyond the control of Contractor.

E. *Submittals Other than Shop Drawings, Samples, and Owner-Delegated Designs*

1. The following provisions apply to all Submittals other than Shop Drawings, Samples, and Owner-delegated designs:

   a. Contractor shall submit all such Submittals to the Engineer in accordance with the Schedule of Submittals and pursuant to the applicable terms of the Contract Documents.

   b. Engineer will provide timely review of all such Submittals in accordance with the Schedule of Submittals and return such Submittals with a notation of either Accepted or Not Accepted. Any such Submittal that is not returned within the time established in the Schedule of Submittals will be deemed accepted.

   c. Engineer's review will be only to determine if the Submittal is acceptable under the requirements of the Contract Documents as to general form and content of the Submittal.


**Copyright© 2018 National Society of Professional Engineers, American Council of Engineering Companies, and American Society of Civil Engineers. All rights reserved.**

d. If any such Submittal is not accepted, Contractor shall confer with Engineer regarding the reason for the non-acceptance, and resubmit an acceptable document.

2. Procedures for the submittal and acceptance of the Progress Schedule, the Schedule of Submittals, and the Schedule of Values are set forth in Paragraphs 2.03. 2.04, and 2.05.

F. Owner-delegated Designs: Submittals pursuant to Owner-delegated designs are governed by the provisions of Paragraph 7.19.

7.17 *Contractor's General Warranty and Guarantee*

A. Contractor warrants and guarantees to Owner that all Work will be in accordance with the Contract Documents and will not be defective. Engineer is entitled to rely on Contractor's warranty and guarantee.

B. Owner's rights under this warranty and guarantee are in addition to, and are not limited by, Owner's rights under the correction period provisions of Paragraph 15.08. The time in which Owner may enforce its warranty and guarantee rights under this Paragraph 7.17 is limited only by applicable Laws and Regulations restricting actions to enforce such rights; provided, however, that after the end of the correction period under Paragraph 15.08:

1. Owner shall give Contractor written notice of any defective Work within 60 days of the discovery that such Work is defective; and

2. Such notice will be deemed the start of an event giving rise to a Claim under Paragraph 12.01.B, such that any related Claim must be brought within 30 days of the notice.

C. Contractor's warranty and guarantee hereunder excludes defects or damage caused by:

1. abuse, or improper modification, maintenance, or operation, by persons other than Contractor, Subcontractors, Suppliers, or any other individual or entity for whom Contractor is responsible; or

2. normal wear and tear under normal usage.

D. Contractor's obligation to perform and complete the Work in accordance with the Contract Documents is absolute. None of the following will constitute an acceptance of Work that is not in accordance with the Contract Documents, a release of Contractor's obligation to perform the Work in accordance with the Contract Documents, or a release of Owner's warranty and guarantee rights under this Paragraph 7.17:

1. Observations by Engineer;

2. Recommendation by Engineer or payment by Owner of any progress or final payment;

3. The issuance of a certificate of Substantial Completion by Engineer or any payment related thereto by Owner;

4. Use or occupancy of the Work or any part thereof by Owner;

5. Any review and approval of a Shop Drawing or Sample submittal;

6. The issuance of a notice of acceptability by Engineer;

7. The end of the correction period established in Paragraph 15.08;

8. Any inspection, test, or approval by others; or


**Copyright© 2018 National Society of Professional Engineers, American Council of Engineering Companies, and American Society of Civil Engineers. All rights reserved.**

9. Any correction of defective Work by Owner.

E. If the Contract requires the Contractor to accept the assignment of a contract entered into by Owner, then the specific warranties, guarantees, and correction obligations contained in the assigned contract will govern with respect to Contractor's performance obligations to Owner for the Work described in the assigned contract.

7.18 *Indemnification*

A. To the fullest extent permitted by Laws and Regulations, and in addition to any other obligations of Contractor under the Contract or otherwise, Contractor shall indemnify and hold harmless Owner and Engineer, and the officers, directors, members, partners, employees, agents, consultants and subcontractors of each and any of them, from losses, damages, costs, and judgments (including but not limited to all fees and charges of engineers, architects, attorneys, and other professionals, and all court or arbitration or other dispute resolution costs) arising from third-party claims or actions relating to or resulting from the performance or furnishing of the Work, provided that any such claim, action, loss, cost, judgment or damage is attributable to bodily injury, sickness, disease, or death, or to damage to or destruction of tangible property (other than the Work itself), including the loss of use resulting therefrom, but only to the extent caused by any negligent act or omission of Contractor, any Subcontractor, any Supplier, or any individual or entity directly or indirectly employed by any of them to perform any of the Work, or anyone for whose acts any of them may be liable.

B. In any and all claims against Owner or Engineer, or any of their officers, directors, members, partners, employees, agents, consultants, or subcontractors, by any employee (or the survivor or personal representative of such employee) of Contractor, any Subcontractor, any Supplier, or any individual or entity directly or indirectly employed by any of them to perform any of the Work, or anyone for whose acts any of them may be liable, the indemnification obligation under Paragraph 7.18.A will not be limited in any way by any limitation on the amount or type of damages, compensation, or benefits payable by or for Contractor or any such Subcontractor, Supplier, or other individual or entity under workers' compensation acts, disability benefit acts, or other employee benefit acts.

7.19 *Delegation of Professional Design Services*

A. Owner may require Contractor to provide professional design services for a portion of the Work by express delegation in the Contract Documents. Such delegation will specify the performance and design criteria that such services must satisfy, and the Submittals that Contractor must furnish to Engineer with respect to the Owner-delegated design.

B. Contractor shall cause such Owner-delegated professional design services to be provided pursuant to the professional standard of care by a properly licensed design professional, whose signature and seal must appear on all drawings, calculations, specifications, certifications, and Submittals prepared by such design professional. Such design professional must issue all certifications of design required by Laws and Regulations.

C. If a Shop Drawing or other Submittal related to the Owner-delegated design is prepared by Contractor, a Subcontractor, or others for submittal to Engineer, then such Shop Drawing or other Submittal must bear the written approval of Contractor's design professional when submitted by Contractor to Engineer.


**Copyright© 2018 National Society of Professional Engineers, American Council of Engineering Companies, and American Society of Civil Engineers. All rights reserved.**

D. Owner and Engineer shall be entitled to rely upon the adequacy, accuracy, and completeness of the services, certifications, and approvals performed or provided by the design professionals retained or employed by Contractor under an Owner-delegated design, subject to the professional standard of care and the performance and design criteria stated in the Contract Documents.

E. Pursuant to this Paragraph 7.19, Engineer's review, approval, and other determinations regarding design drawings, calculations, specifications, certifications, and other Submittals furnished by Contractor pursuant to an Owner-delegated design will be only for the following limited purposes:

1. Checking for conformance with the requirements of this Paragraph 7.19;

2. Confirming that Contractor (through its design professionals) has used the performance and design criteria specified in the Contract Documents; and

3. Establishing that the design furnished by Contractor is consistent with the design concept expressed in the Contract Documents.

F. Contractor shall not be responsible for the adequacy of performance or design criteria specified by Owner or Engineer.

G. Contractor is not required to provide professional services in violation of applicable Laws and Regulations.

**ARTICLE 8—OTHER WORK AT THE SITE**

8.01 *Other Work*

A. In addition to and apart from the Work under the Contract Documents, the Owner may perform other work at or adjacent to the Site. Such other work may be performed by Owner's employees, or through contracts between the Owner and third parties. Owner may also arrange to have third-party utility owners perform work on their utilities and facilities at or adjacent to the Site.

B. If Owner performs other work at or adjacent to the Site with Owner's employees, or through contracts for such other work, then Owner shall give Contractor written notice thereof prior to starting any such other work. If Owner has advance information regarding the start of any third-party utility work that Owner has arranged to take place at or adjacent to the Site, Owner shall provide such information to Contractor.

C. Contractor shall afford proper and safe access to the Site to each contractor that performs such other work, each utility owner performing other work, and Owner, if Owner is performing other work with Owner's employees, and provide a reasonable opportunity for the introduction and storage of materials and equipment and the execution of such other work.

D. Contractor shall do all cutting, fitting, and patching of the Work that may be required to properly connect or otherwise make its several parts come together and properly integrate with such other work. Contractor shall not endanger any work of others by cutting, excavating, or otherwise altering such work; provided, however, that Contractor may cut or alter others' work with the written consent of Engineer and the others whose work will be affected.


**Copyright© 2018 National Society of Professional Engineers, American Council of Engineering Companies, and American Society of Civil Engineers. All rights reserved.**

E. If the proper execution or results of any part of Contractor's Work depends upon work performed by others, Contractor shall inspect such other work and promptly report to Engineer in writing any delays, defects, or deficiencies in such other work that render it unavailable or unsuitable for the proper execution and results of Contractor's Work. Contractor's failure to so report will constitute an acceptance of such other work as fit and proper for integration with Contractor's Work except for latent defects and deficiencies in such other work.

F. The provisions of this article are not applicable to work that is performed by third-party utilities or other third-party entities without a contract with Owner, or that is performed without having been arranged by Owner. If such work occurs, then any related delay, disruption, or interference incurred by Contractor is governed by the provisions of Paragraph 4.05.C.3.

8.02 *Coordination*

A. If Owner intends to contract with others for the performance of other work at or adjacent to the Site, to perform other work at or adjacent to the Site with Owner's employees, or to arrange to have utility owners perform work at or adjacent to the Site, the following will be set forth in the Supplementary Conditions or provided to Contractor prior to the start of any such other work:

1. The identity of the individual or entity that will have authority and responsibility for coordination of the activities among the various contractors;

2. An itemization of the specific matters to be covered by such authority and responsibility; and

3. The extent of such authority and responsibilities.

B. Unless otherwise provided in the Supplementary Conditions, Owner shall have sole authority and responsibility for such coordination.

8.03 *Legal Relationships*

A. If, in the course of performing other work for Owner at or adjacent to the Site, the Owner's employees, any other contractor working for Owner, or any utility owner that Owner has arranged to perform work, causes damage to the Work or to the property of Contractor or its Subcontractors, or delays, disrupts, interferes with, or increases the scope or cost of the performance of the Work, through actions or inaction, then Contractor shall be entitled to an equitable adjustment in the Contract Price or the Contract Times. Contractor must submit any Change Proposal seeking an equitable adjustment in the Contract Price or the Contract Times under this paragraph within 30 days of the damaging, delaying, disrupting, or interfering event. The entitlement to, and extent of, any such equitable adjustment will take into account information (if any) regarding such other work that was provided to Contractor in the Contract Documents prior to the submittal of the Bid or the final negotiation of the terms of the Contract, and any remedies available to Contractor under Laws or Regulations concerning utility action or inaction. When applicable, any such equitable adjustment in Contract Price will be conditioned on Contractor assigning to Owner all Contractor's rights against such other contractor or utility owner with respect to the damage, delay, disruption, or interference that is the subject of the adjustment. Contractor's entitlement to an adjustment of the Contract Times or Contract Price is subject to the provisions of Paragraphs 4.05.D and 4.05.E.


**Copyright© 2018 National Society of Professional Engineers, American Council of Engineering Companies, and American Society of Civil Engineers. All rights reserved.**

B. Contractor shall take reasonable and customary measures to avoid damaging, delaying, disrupting, or interfering with the work of Owner, any other contractor, or any utility owner performing other work at or adjacent to the Site.

1. If Contractor fails to take such measures and as a result damages, delays, disrupts, or interferes with the work of any such other contractor or utility owner, then Owner may impose a set-off against payments due Contractor, and assign to such other contractor or utility owner the Owner's contractual rights against Contractor with respect to the breach of the obligations set forth in this Paragraph 8.03.B.

2. When Owner is performing other work at or adjacent to the Site with Owner's employees, Contractor shall be liable to Owner for damage to such other work, and for the reasonable direct delay, disruption, and interference costs incurred by Owner as a result of Contractor's failure to take reasonable and customary measures with respect to Owner's other work. In response to such damage, delay, disruption, or interference, Owner may impose a set-off against payments due Contractor.

C. If Contractor damages, delays, disrupts, or interferes with the work of any other contractor, or any utility owner performing other work at or adjacent to the Site, through Contractor's failure to take reasonable and customary measures to avoid such impacts, or if any claim arising out of Contractor's actions, inactions, or negligence in performance of the Work at or adjacent to the Site is made by any such other contractor or utility owner against Contractor, Owner, or Engineer, then Contractor shall (1) promptly attempt to settle the claim as to all parties through negotiations with such other contractor or utility owner, or otherwise resolve the claim by arbitration or other dispute resolution proceeding or at law, and (2) indemnify and hold harmless Owner and Engineer, and the officers, directors, members, partners, employees, agents, consultants and subcontractors of each and any of them from and against any such claims, and against all costs, losses, and damages (including but not limited to all fees and charges of engineers, architects, attorneys, and other professionals and all court or arbitration or other dispute resolution costs) arising out of or relating to such damage, delay, disruption, or interference.

## ARTICLE 9—OWNER'S RESPONSIBILITIES

9.01 *Communications to Contractor*

A. Except as otherwise provided in these General Conditions, Owner shall issue all communications to Contractor through Engineer.

9.02 *Replacement of Engineer*

A. Owner may at its discretion appoint an engineer to replace Engineer, provided Contractor makes no reasonable objection to the replacement engineer. The replacement engineer's status under the Contract Documents will be that of the former Engineer.

9.03 *Furnish Data*

A. Owner shall promptly furnish the data required of Owner under the Contract Documents.

9.04 *Pay When Due*

A. Owner shall make payments to Contractor when they are due as provided in the Agreement.


**Copyright© 2018 National Society of Professional Engineers, American Council of Engineering Companies, and American Society of Civil Engineers. All rights reserved.**

9.05 *Lands and Easements; Reports, Tests, and Drawings*

A. Owner's duties with respect to providing lands and easements are set forth in Paragraph 5.01.

B. Owner's duties with respect to providing engineering surveys to establish reference points are set forth in Paragraph 4.03.

C. Article 5 refers to Owner's identifying and making available to Contractor copies of reports of explorations and tests of conditions at the Site, and drawings of physical conditions relating to existing surface or subsurface structures at the Site.

9.06 *Insurance*

A. Owner's responsibilities, if any, with respect to purchasing and maintaining liability and property insurance are set forth in Article 6.

9.07 *Change Orders*

A. Owner's responsibilities with respect to Change Orders are set forth in Article 11.

9.08 *Inspections, Tests, and Approvals*

A. Owner's responsibility with respect to certain inspections, tests, and approvals is set forth in Paragraph 14.02.B.

9.09 *Limitations on Owner's Responsibilities*

A. The Owner shall not supervise, direct, or have control or authority over, nor be responsible for, Contractor's means, methods, techniques, sequences, or procedures of construction, or the safety precautions and programs incident thereto, or for any failure of Contractor to comply with Laws and Regulations applicable to the performance of the Work. Owner will not be responsible for Contractor's failure to perform the Work in accordance with the Contract Documents.

9.10 *Undisclosed Hazardous Environmental Condition*

A. Owner's responsibility in respect to an undisclosed Hazardous Environmental Condition is set forth in Paragraph 5.06.

9.11 *Evidence of Financial Arrangements*

A. Upon request of Contractor, Owner shall furnish Contractor reasonable evidence that financial arrangements have been made to satisfy Owner's obligations under the Contract (including obligations under proposed changes in the Work).

9.12 *Safety Programs*

A. While at the Site, Owner's employees and representatives shall comply with the specific applicable requirements of Contractor's safety programs of which Owner has been informed.

B. Owner shall furnish copies of any applicable Owner safety programs to Contractor.


**Copyright© 2018 National Society of Professional Engineers, American Council of Engineering Companies, and American Society of Civil Engineers. All rights reserved.**

## ARTICLE 10—ENGINEER'S STATUS DURING CONSTRUCTION

10.01 *Owner's Representative*

A. Engineer will be Owner's representative during the construction period. The duties and responsibilities and the limitations of authority of Engineer as Owner's representative during construction are set forth in the Contract.

10.02 *Visits to Site*

A. Engineer will make visits to the Site at intervals appropriate to the various stages of construction as Engineer deems necessary in order to observe, as an experienced and qualified design professional, the progress that has been made and the quality of the various aspects of Contractor's executed Work. Based on information obtained during such visits and observations, Engineer, for the benefit of Owner, will determine, in general, if the Work is proceeding in accordance with the Contract Documents. Engineer will not be required to make exhaustive or continuous inspections on the Site to check the quality or quantity of the Work. Engineer's efforts will be directed toward providing for Owner a greater degree of confidence that the completed Work will conform generally to the Contract Documents. On the basis of such visits and observations, Engineer will keep Owner informed of the progress of the Work and will endeavor to guard Owner against defective Work.

B. Engineer's visits and observations are subject to all the limitations on Engineer's authority and responsibility set forth in Paragraph 10.07. Particularly, but without limitation, during or as a result of Engineer's visits or observations of Contractor's Work, Engineer will not supervise, direct, control, or have authority over or be responsible for Contractor's means, methods, techniques, sequences, or procedures of construction, or the safety precautions and programs incident thereto, or for any failure of Contractor to comply with Laws and Regulations applicable to the performance of the Work.

10.03 *Resident Project Representative*

A. If Owner and Engineer have agreed that Engineer will furnish a Resident Project Representative to represent Engineer at the Site and assist Engineer in observing the progress and quality of the Work, then the authority and responsibilities of any such Resident Project Representative will be as provided in the Supplementary Conditions, and limitations on the responsibilities thereof will be as provided in the Supplementary Conditions and in Paragraph 10.07.

B. If Owner designates an individual or entity who is not Engineer's consultant, agent, or employee to represent Owner at the Site, then the responsibilities and authority of such individual or entity will be as provided in the Supplementary Conditions.

10.04 *Engineer's Authority*

A. Engineer has the authority to reject Work in accordance with Article 14.

B. Engineer's authority as to Submittals is set forth in Paragraph 7.16.

C. Engineer's authority as to design drawings, calculations, specifications, certifications and other Submittals from Contractor in response to Owner's delegation (if any) to Contractor of professional design services, is set forth in Paragraph 7.19.

D. Engineer's authority as to changes in the Work is set forth in Article 11.


**Copyright© 2018 National Society of Professional Engineers, American Council of Engineering Companies, and American Society of Civil Engineers. All rights reserved.**

E. Engineer's authority as to Applications for Payment is set forth in Article 15.

10.05 *Determinations for Unit Price Work*

A. Engineer will determine the actual quantities and classifications of Unit Price Work performed by Contractor as set forth in Paragraph 13.03.

10.06 *Decisions on Requirements of Contract Documents and Acceptability of Work*

A. Engineer will render decisions regarding the requirements of the Contract Documents, and judge the acceptability of the Work, pursuant to the specific procedures set forth herein for initial interpretations, Change Proposals, and acceptance of the Work. In rendering such decisions and judgments, Engineer will not show partiality to Owner or Contractor, and will not be liable to Owner, Contractor, or others in connection with any proceedings, interpretations, decisions, or judgments conducted or rendered in good faith.

10.07 *Limitations on Engineer's Authority and Responsibilities*

A. Neither Engineer's authority or responsibility under this Article 10 or under any other provision of the Contract, nor any decision made by Engineer in good faith either to exercise or not exercise such authority or responsibility or the undertaking, exercise, or performance of any authority or responsibility by Engineer, will create, impose, or give rise to any duty in contract, tort, or otherwise owed by Engineer to Contractor, any Subcontractor, any Supplier, any other individual or entity, or to any surety for or employee or agent of any of them.

B. Engineer will not supervise, direct, control, or have authority over or be responsible for Contractor's means, methods, techniques, sequences, or procedures of construction, or the safety precautions and programs incident thereto, or for any failure of Contractor to comply with Laws and Regulations applicable to the performance of the Work. Engineer will not be responsible for Contractor's failure to perform the Work in accordance with the Contract Documents.

C. Engineer will not be responsible for the acts or omissions of Contractor or of any Subcontractor, any Supplier, or of any other individual or entity performing any of the Work.

D. Engineer's review of the final Application for Payment and accompanying documentation, and all maintenance and operating instructions, schedules, guarantees, bonds, certificates of inspection, tests and approvals, and other documentation required to be delivered by Contractor under Paragraph 15.06.A, will only be to determine generally that their content complies with the requirements of, and in the case of certificates of inspections, tests, and approvals, that the results certified indicate compliance with the Contract Documents.

E. The limitations upon authority and responsibility set forth in this Paragraph 10.07 also apply to the Resident Project Representative, if any.

10.08 *Compliance with Safety Program*

A. While at the Site, Engineer's employees and representatives will comply with the specific applicable requirements of Owner's and Contractor's safety programs of which Engineer has been informed.


**Copyright© 2018 National Society of Professional Engineers, American Council of Engineering Companies, and American Society of Civil Engineers. All rights reserved.**

## ARTICLE 11—CHANGES TO THE CONTRACT

11.01 *Amending and Supplementing the Contract*

A. The Contract may be amended or supplemented by a Change Order, a Work Change Directive, or a Field Order.

B. If an amendment or supplement to the Contract includes a change in the Contract Price or the Contract Times, such amendment or supplement must be set forth in a Change Order.

C. All changes to the Contract that involve (1) the performance or acceptability of the Work, (2) the design (as set forth in the Drawings, Specifications, or otherwise), or (3) other engineering or technical matters, must be supported by Engineer's recommendation. Owner and Contractor may amend other terms and conditions of the Contract without the recommendation of the Engineer.

11.02 *Change Orders*

A. Owner and Contractor shall execute appropriate Change Orders covering:

1. Changes in Contract Price or Contract Times which are agreed to by the parties, including any undisputed sum or amount of time for Work actually performed in accordance with a Work Change Directive;

2. Changes in Contract Price resulting from an Owner set-off, unless Contractor has duly contested such set-off;

3. Changes in the Work which are: (a) ordered by Owner pursuant to Paragraph 11.05, (b) required because of Owner's acceptance of defective Work under Paragraph 14.04 or Owner's correction of defective Work under Paragraph 14.07, or (c) agreed to by the parties, subject to the need for Engineer's recommendation if the change in the Work involves the design (as set forth in the Drawings, Specifications, or otherwise) or other engineering or technical matters; and

4. Changes that embody the substance of any final and binding results under: Paragraph 11.03.B, resolving the impact of a Work Change Directive; Paragraph 11.09, concerning Change Proposals; Article 12, Claims; Paragraph 13.02.D, final adjustments resulting from allowances; Paragraph 13.03.D, final adjustments relating to determination of quantities for Unit Price Work; and similar provisions.

B. If Owner or Contractor refuses to execute a Change Order that is required to be executed under the terms of Paragraph 11.02.A, it will be deemed to be of full force and effect, as if fully executed.

11.03 *Work Change Directives*

A. A Work Change Directive will not change the Contract Price or the Contract Times but is evidence that the parties expect that the modification ordered or documented by a Work Change Directive will be incorporated in a subsequently issued Change Order, following negotiations by the parties as to the Work Change Directive's effect, if any, on the Contract Price and Contract Times; or, if negotiations are unsuccessful, by a determination under the terms of the Contract Documents governing adjustments, expressly including Paragraph 11.07 regarding change of Contract Price.


**Copyright© 2018 National Society of Professional Engineers, American Council of Engineering Companies, and American Society of Civil Engineers. All rights reserved.**

B. If Owner has issued a Work Change Directive and:

1. Contractor believes that an adjustment in Contract Times or Contract Price is necessary, then Contractor shall submit any Change Proposal seeking such an adjustment no later than 30 days after the completion of the Work set out in the Work Change Directive.

2. Owner believes that an adjustment in Contract Times or Contract Price is necessary, then Owner shall submit any Claim seeking such an adjustment no later than 60 days after issuance of the Work Change Directive.

11.04 *Field Orders*

A. Engineer may authorize minor changes in the Work if the changes do not involve an adjustment in the Contract Price or the Contract Times and are compatible with the design concept of the completed Project as a functioning whole as indicated by the Contract Documents. Such changes will be accomplished by a Field Order and will be binding on Owner and also on Contractor, which shall perform the Work involved promptly.

B. If Contractor believes that a Field Order justifies an adjustment in the Contract Price or Contract Times, then before proceeding with the Work at issue, Contractor shall submit a Change Proposal as provided herein.

11.05 *Owner-Authorized Changes in the Work*

A. Without invalidating the Contract and without notice to any surety, Owner may, at any time or from time to time, order additions, deletions, or revisions in the Work. Changes involving the design (as set forth in the Drawings, Specifications, or otherwise) or other engineering or technical matters will be supported by Engineer's recommendation.

B. Such changes in the Work may be accomplished by a Change Order, if Owner and Contractor have agreed as to the effect, if any, of the changes on Contract Times or Contract Price; or by a Work Change Directive. Upon receipt of any such document, Contractor shall promptly proceed with the Work involved; or, in the case of a deletion in the Work, promptly cease construction activities with respect to such deleted Work. Added or revised Work must be performed under the applicable conditions of the Contract Documents.

C. Nothing in this Paragraph 11.05 obligates Contractor to undertake work that Contractor reasonably concludes cannot be performed in a manner consistent with Contractor's safety obligations under the Contract Documents or Laws and Regulations.

11.06 *Unauthorized Changes in the Work*

A. Contractor shall not be entitled to an increase in the Contract Price or an extension of the Contract Times with respect to any work performed that is not required by the Contract Documents, as amended, modified, or supplemented, except in the case of an emergency as provided in Paragraph 7.15 or in the case of uncovering Work as provided in Paragraph 14.05.C.2.

11.07 *Change of Contract Price*

A. The Contract Price may only be changed by a Change Order. Any Change Proposal for an adjustment in the Contract Price must comply with the provisions of Paragraph 11.09. Any Claim for an adjustment of Contract Price must comply with the provisions of Article 12.

B. An adjustment in the Contract Price will be determined as follows:


**Copyright© 2018 National Society of Professional Engineers, American Council of Engineering Companies, and American Society of Civil Engineers. All rights reserved.**

1. Where the Work involved is covered by unit prices contained in the Contract Documents, then by application of such unit prices to the quantities of the items involved (subject to the provisions of Paragraph 13.03);

2. Where the Work involved is not covered by unit prices contained in the Contract Documents, then by a mutually agreed lump sum (which may include an allowance for overhead and profit not necessarily in accordance with Paragraph 11.07.C.2); or

3. Where the Work involved is not covered by unit prices contained in the Contract Documents and the parties do not reach mutual agreement to a lump sum, then on the basis of the Cost of the Work (determined as provided in Paragraph 13.01) plus a Contractor's fee for overhead and profit (determined as provided in Paragraph 11.07.C).

C. *Contractor's Fee*: When applicable, the Contractor's fee for overhead and profit will be determined as follows:

1. A mutually acceptable fixed fee; or

2. If a fixed fee is not agreed upon, then a fee based on the following percentages of the various portions of the Cost of the Work:

a. For costs incurred under Paragraphs 13.01.B.1 and 13.01.B.2, the Contractor's fee will be 15 percent;

b. For costs incurred under Paragraph 13.01.B.3, the Contractor's fee will be 5 percent;

c. Where one or more tiers of subcontracts are on the basis of Cost of the Work plus a fee and no fixed fee is agreed upon, the intent of Paragraphs 11.07.C.2.a and 11.07.C.2.b is that the Contractor's fee will be based on: (1) a fee of 15 percent of the costs incurred under Paragraphs 13.01.B.1 and 13.01.B.2 by the Subcontractor that actually performs the Work, at whatever tier, and (2) with respect to Contractor itself and to any Subcontractors of a tier higher than that of the Subcontractor that actually performs the Work, a fee of 5 percent of the amount (fee plus underlying costs incurred) attributable to the next lower tier Subcontractor; provided, however, that for any such subcontracted Work the maximum total fee to be paid by Owner will be no greater than 27 percent of the costs incurred by the Subcontractor that actually performs the Work;

d. No fee will be payable on the basis of costs itemized under Paragraphs 13.01.B.4, 13.01.B.5, and 13.01.C;

e. The amount of credit to be allowed by Contractor to Owner for any change which results in a net decrease in Cost of the Work will be the amount of the actual net decrease in Cost of the Work and a deduction of an additional amount equal to 5 percent of such actual net decrease in Cost of the Work; and

f. When both additions and credits are involved in any one change or Change Proposal, the adjustment in Contractor's fee will be computed by determining the sum of the costs in each of the cost categories in Paragraph 13.01.B (specifically, payroll costs, Paragraph 13.01.B.1; incorporated materials and equipment costs, Paragraph 13.01.B.2; Subcontract costs, Paragraph 13.01.B.3; special consultants costs, Paragraph 13.01.B.4; and other costs, Paragraph 13.01.B.5) and applying to each such cost category sum the appropriate fee from Paragraphs 11.07.C.2.a through 11.07.C.2.e, inclusive.


**Copyright© 2018 National Society of Professional Engineers, American Council of Engineering Companies, and American Society of Civil Engineers. All rights reserved.**

11.08 *Change of Contract Times*

A. The Contract Times may only be changed by a Change Order. Any Change Proposal for an adjustment in the Contract Times must comply with the provisions of Paragraph 11.09. Any Claim for an adjustment in the Contract Times must comply with the provisions of Article 12.

B. Delay, disruption, and interference in the Work, and any related changes in Contract Times, are addressed in and governed by Paragraph 4.05.

11.09 *Change Proposals*

A. *Purpose and Content*: Contractor shall submit a Change Proposal to Engineer to request an adjustment in the Contract Times or Contract Price; contest an initial decision by Engineer concerning the requirements of the Contract Documents or relating to the acceptability of the Work under the Contract Documents; challenge a set-off against payment due; or seek other relief under the Contract. The Change Proposal will specify any proposed change in Contract Times or Contract Price, or other proposed relief, and explain the reason for the proposed change, with citations to any governing or applicable provisions of the Contract Documents. Each Change Proposal will address only one issue, or a set of closely related issues.

B. *Change Proposal Procedures*

1. *Submittal*: Contractor shall submit each Change Proposal to Engineer within 30 days after the start of the event giving rise thereto, or after such initial decision.

2. *Supporting Data*: The Contractor shall submit supporting data, including the proposed change in Contract Price or Contract Time (if any), to the Engineer and Owner within 15 days after the submittal of the Change Proposal.

    a. Change Proposals based on or related to delay, interruption, or interference must comply with the provisions of Paragraphs 4.05.D and 4.05.E.

    b. Change proposals related to a change of Contract Price must include full and detailed accounts of materials incorporated into the Work and labor and equipment used for the subject Work.

    The supporting data must be accompanied by a written statement that the supporting data are accurate and complete, and that any requested time or price adjustment is the entire adjustment to which Contractor believes it is entitled as a result of said event.

3. *Engineer's Initial Review*: Engineer will advise Owner regarding the Change Proposal, and consider any comments or response from Owner regarding the Change Proposal. If in its discretion Engineer concludes that additional supporting data is needed before conducting a full review and making a decision regarding the Change Proposal, then Engineer may request that Contractor submit such additional supporting data by a date specified by Engineer, prior to Engineer beginning its full review of the Change Proposal.

4. *Engineer's Full Review and Action on the Change Proposal*: Upon receipt of Contractor's supporting data (including any additional data requested by Engineer), Engineer will conduct a full review of each Change Proposal and, within 30 days after such receipt of the Contractor's supporting data, either approve the Change Proposal in whole, deny it in whole, or approve it in part and deny it in part. Such actions must be in writing, with a copy provided to Owner and Contractor. If Engineer does not take action on the Change


**Copyright© 2018 National Society of Professional Engineers, American Council of Engineering Companies, and American Society of Civil Engineers. All rights reserved.**

Proposal within 30 days, then either Owner or Contractor may at any time thereafter submit a letter to the other party indicating that as a result of Engineer's inaction the Change Proposal is deemed denied, thereby commencing the time for appeal of the denial under Article 12.

5. *Binding Decision*: Engineer's decision is final and binding upon Owner and Contractor, unless Owner or Contractor appeals the decision by filing a Claim under Article 12.

C. *Resolution of Certain Change Proposals*: If the Change Proposal does not involve the design (as set forth in the Drawings, Specifications, or otherwise), the acceptability of the Work, or other engineering or technical matters, then Engineer will notify the parties in writing that the Engineer is unable to resolve the Change Proposal. For purposes of further resolution of such a Change Proposal, such notice will be deemed a denial, and Contractor may choose to seek resolution under the terms of Article 12.

D. *Post-Completion*: Contractor shall not submit any Change Proposals after Engineer issues a written recommendation of final payment pursuant to Paragraph 15.06.B.

11.10 *Notification to Surety*

A. If the provisions of any bond require notice to be given to a surety of any change affecting the general scope of the Work or the provisions of the Contract Documents (including, but not limited to, Contract Price or Contract Times), the giving of any such notice will be Contractor's responsibility. The amount of each applicable bond will be adjusted to reflect the effect of any such change.

**ARTICLE 12—CLAIMS**

12.01 *Claims*

A. *Claims Process*: The following disputes between Owner and Contractor are subject to the Claims process set forth in this article:

1. Appeals by Owner or Contractor of Engineer's decisions regarding Change Proposals;

2. Owner demands for adjustments in the Contract Price or Contract Times, or other relief under the Contract Documents;

3. Disputes that Engineer has been unable to address because they do not involve the design (as set forth in the Drawings, Specifications, or otherwise), the acceptability of the Work, or other engineering or technical matters; and

4. Subject to the waiver provisions of Paragraph 15.07, any dispute arising after Engineer has issued a written recommendation of final payment pursuant to Paragraph 15.06.B.

B. *Submittal of Claim*: The party submitting a Claim shall deliver it directly to the other party to the Contract promptly (but in no event later than 30 days) after the start of the event giving rise thereto; in the case of appeals regarding Change Proposals within 30 days of the decision under appeal. The party submitting the Claim shall also furnish a copy to the Engineer, for its information only. The responsibility to substantiate a Claim rests with the party making the Claim. In the case of a Claim by Contractor seeking an increase in the Contract Times or Contract Price, Contractor shall certify that the Claim is made in good faith, that the supporting data are accurate and complete, and that to the best of Contractor's knowledge


**Copyright© 2018 National Society of Professional Engineers, American Council of Engineering Companies, and American Society of Civil Engineers. All rights reserved.**

and belief the amount of time or money requested accurately reflects the full amount to which Contractor is entitled.

C. *Review and Resolution*: The party receiving a Claim shall review it thoroughly, giving full consideration to its merits. The two parties shall seek to resolve the Claim through the exchange of information and direct negotiations. The parties may extend the time for resolving the Claim by mutual agreement. All actions taken on a Claim will be stated in writing and submitted to the other party, with a copy to Engineer.

D. *Mediation*

1. At any time after initiation of a Claim, Owner and Contractor may mutually agree to mediation of the underlying dispute. The agreement to mediate will stay the Claim submittal and response process.

2. If Owner and Contractor agree to mediation, then after 60 days from such agreement, either Owner or Contractor may unilaterally terminate the mediation process, and the Claim submittal and decision process will resume as of the date of the termination. If the mediation proceeds but is unsuccessful in resolving the dispute, the Claim submittal and decision process will resume as of the date of the conclusion of the mediation, as determined by the mediator.

3. Owner and Contractor shall each pay one-half of the mediator's fees and costs.

E. *Partial Approval*: If the party receiving a Claim approves the Claim in part and denies it in part, such action will be final and binding unless within 30 days of such action the other party invokes the procedure set forth in Article 17 for final resolution of disputes.

F. *Denial of Claim*: If efforts to resolve a Claim are not successful, the party receiving the Claim may deny it by giving written notice of denial to the other party. If the receiving party does not take action on the Claim within 90 days, then either Owner or Contractor may at any time thereafter submit a letter to the other party indicating that as a result of the inaction, the Claim is deemed denied, thereby commencing the time for appeal of the denial. A denial of the Claim will be final and binding unless within 30 days of the denial the other party invokes the procedure set forth in Article 17 for the final resolution of disputes.

G. *Final and Binding Results*: If the parties reach a mutual agreement regarding a Claim, whether through approval of the Claim, direct negotiations, mediation, or otherwise; or if a Claim is approved in part and denied in part, or denied in full, and such actions become final and binding; then the results of the agreement or action on the Claim will be incorporated in a Change Order or other written document to the extent they affect the Contract, including the Work, the Contract Times, or the Contract Price.

## ARTICLE 13—COST OF THE WORK; ALLOWANCES; UNIT PRICE WORK

13.01 *Cost of the Work*

A. *Purposes for Determination of Cost of the Work*: The term Cost of the Work means the sum of all costs necessary for the proper performance of the Work at issue, as further defined below. The provisions of this Paragraph 13.01 are used for two distinct purposes:

1. To determine Cost of the Work when Cost of the Work is a component of the Contract Price, under cost-plus-fee, time-and-materials, or other cost-based terms; or


**Copyright© 2018 National Society of Professional Engineers, American Council of Engineering Companies, and American Society of Civil Engineers. All rights reserved.**

2. When needed to determine the value of a Change Order, Change Proposal, Claim, set-off, or other adjustment in Contract Price. When the value of any such adjustment is determined on the basis of Cost of the Work, Contractor is entitled only to those additional or incremental costs required because of the change in the Work or because of the event giving rise to the adjustment.

B. *Costs Included*: Except as otherwise may be agreed to in writing by Owner, costs included in the Cost of the Work will be in amounts no higher than those commonly incurred in the locality of the Project, will not include any of the costs itemized in Paragraph 13.01.C, and will include only the following items:

1. Payroll costs for employees in the direct employ of Contractor in the performance of the Work under schedules of job classifications agreed upon by Owner and Contractor in advance of the subject Work. Such employees include, without limitation, superintendents, foremen, safety managers, safety representatives, and other personnel employed full time on the Work. Payroll costs for employees not employed full time on the Work will be apportioned on the basis of their time spent on the Work. Payroll costs include, but are not limited to, salaries and wages plus the cost of fringe benefits, which include social security contributions, unemployment, excise, and payroll taxes, workers' compensation, health and retirement benefits, sick leave, and vacation and holiday pay applicable thereto. The expenses of performing Work outside of regular working hours, on Saturday, Sunday, or legal holidays, will be included in the above to the extent authorized by Owner.

2. Cost of all materials and equipment furnished and incorporated in the Work, including costs of transportation and storage thereof, and Suppliers' field services required in connection therewith. All cash discounts accrue to Contractor unless Owner deposits funds with Contractor with which to make payments, in which case the cash discounts will accrue to Owner. All trade discounts, rebates, and refunds and returns from sale of surplus materials and equipment will accrue to Owner, and Contractor shall make provisions so that they may be obtained.

3. Payments made by Contractor to Subcontractors for Work performed by Subcontractors. If required by Owner, Contractor shall obtain competitive bids from subcontractors acceptable to Owner and Contractor and shall deliver such bids to Owner, which will then determine, with the advice of Engineer, which bids, if any, will be acceptable. If any subcontract provides that the Subcontractor is to be paid on the basis of Cost of the Work plus a fee, the Subcontractor's Cost of the Work and fee will be determined in the same manner as Contractor's Cost of the Work and fee as provided in this Paragraph 13.01.

4. Costs of special consultants (including but not limited to engineers, architects, testing laboratories, surveyors, attorneys, and accountants) employed or retained for services specifically related to the Work.

5. Other costs consisting of the following:

a. The proportion of necessary transportation, travel, and subsistence expenses of Contractor's employees incurred in discharge of duties connected with the Work.

b. Cost, including transportation and maintenance, of all materials, supplies, equipment, machinery, appliances, office, and temporary facilities at the Site, which are


**Copyright© 2018 National Society of Professional Engineers, American Council of Engineering Companies, and American Society of Civil Engineers. All rights reserved.**

consumed in the performance of the Work, and cost, less market value, of such items used but not consumed which remain the property of Contractor.

1) In establishing included costs for materials such as scaffolding, plating, or sheeting, consideration will be given to the actual or the estimated life of the material for use on other projects; or rental rates may be established on the basis of purchase or salvage value of such items, whichever is less. Contractor will not be eligible for compensation for such items in an amount that exceeds the purchase cost of such item.

c. *Construction Equipment Rental*

1) Rentals of all construction equipment and machinery, and the parts thereof, in accordance with rental agreements approved by Owner as to price (including any surcharge or special rates applicable to overtime use of the construction equipment or machinery), and the costs of transportation, loading, unloading, assembly, dismantling, and removal thereof. All such costs will be in accordance with the terms of said rental agreements. The rental of any such equipment, machinery, or parts must cease when the use thereof is no longer necessary for the Work.

2) Costs for equipment and machinery owned by Contractor or a Contractor-related entity will be paid at a rate shown for such equipment in the equipment rental rate book specified in the Supplementary Conditions. An hourly rate will be computed by dividing the monthly rates by 176. These computed rates will include all operating costs.

3) With respect to Work that is the result of a Change Order, Change Proposal, Claim, set-off, or other adjustment in Contract Price ("changed Work"), included costs will be based on the time the equipment or machinery is in use on the changed Work and the costs of transportation, loading, unloading, assembly, dismantling, and removal when directly attributable to the changed Work. The cost of any such equipment or machinery, or parts thereof, must cease to accrue when the use thereof is no longer necessary for the changed Work.

d. Sales, consumer, use, and other similar taxes related to the Work, and for which Contractor is liable, as imposed by Laws and Regulations.

e. Deposits lost for causes other than negligence of Contractor, any Subcontractor, or anyone directly or indirectly employed by any of them or for whose acts any of them may be liable, and royalty payments and fees for permits and licenses.

f. Losses and damages (and related expenses) caused by damage to the Work, not compensated by insurance or otherwise, sustained by Contractor in connection with the performance of the Work (except losses and damages within the deductible amounts of builder's risk or other property insurance established in accordance with Paragraph 6.04), provided such losses and damages have resulted from causes other than the negligence of Contractor, any Subcontractor, or anyone directly or indirectly employed by any of them or for whose acts any of them may be liable. Such losses include settlements made with the written consent and approval of Owner. No such losses, damages, and expenses will be included in the Cost of the Work for the purpose of determining Contractor's fee.


**Copyright© 2018 National Society of Professional Engineers, American Council of Engineering Companies, and American Society of Civil Engineers. All rights reserved.**

g. The cost of utilities, fuel, and sanitary facilities at the Site.

h. Minor expenses such as communication service at the Site, express and courier services, and similar petty cash items in connection with the Work.

i. The costs of premiums for all bonds and insurance that Contractor is required by the Contract Documents to purchase and maintain.

C. *Costs Excluded*: The term Cost of the Work does not include any of the following items:

1. Payroll costs and other compensation of Contractor's officers, executives, principals, general managers, engineers, architects, estimators, attorneys, auditors, accountants, purchasing and contracting agents, expediters, timekeepers, clerks, and other personnel employed by Contractor, whether at the Site or in Contractor's principal or branch office for general administration of the Work and not specifically included in the agreed upon schedule of job classifications referred to in Paragraph 13.01.B.1 or specifically covered by Paragraph 13.01.B.4. The payroll costs and other compensation excluded here are to be considered administrative costs covered by the Contractor's fee.

2. The cost of purchasing, renting, or furnishing small tools and hand tools.

3. Expenses of Contractor's principal and branch offices other than Contractor's office at the Site.

4. Any part of Contractor's capital expenses, including interest on Contractor's capital employed for the Work and charges against Contractor for delinquent payments.

5. Costs due to the negligence of Contractor, any Subcontractor, or anyone directly or indirectly employed by any of them or for whose acts any of them may be liable, including but not limited to, the correction of defective Work, disposal of materials or equipment wrongly supplied, and making good any damage to property.

6. Expenses incurred in preparing and advancing Claims.

7. Other overhead or general expense costs of any kind and the costs of any item not specifically and expressly included in Paragraph 13.01.B.

D. *Contractor's Fee*

1. When the Work as a whole is performed on the basis of cost-plus-a-fee, then:

a. Contractor's fee for the Work set forth in the Contract Documents as of the Effective Date of the Contract will be determined as set forth in the Agreement.

b. for any Work covered by a Change Order, Change Proposal, Claim, set-off, or other adjustment in Contract Price on the basis of Cost of the Work, Contractor's fee will be determined as follows:

1) When the fee for the Work as a whole is a percentage of the Cost of the Work, the fee will automatically adjust as the Cost of the Work changes.

2) When the fee for the Work as a whole is a fixed fee, the fee for any additions or deletions will be determined in accordance with Paragraph 11.07.C.2.

2. When the Work as a whole is performed on the basis of a stipulated sum, or any other basis other than cost-plus-a-fee, then Contractor's fee for any Work covered by a Change


**Copyright© 2018 National Society of Professional Engineers, American Council of Engineering Companies, and American Society of Civil Engineers. All rights reserved.**

Order, Change Proposal, Claim, set-off, or other adjustment in Contract Price on the basis of Cost of the Work will be determined in accordance with Paragraph 11.07.C.2.

E. *Documentation and Audit*: Whenever the Cost of the Work for any purpose is to be determined pursuant to this Article 13, Contractor and pertinent Subcontractors will establish and maintain records of the costs in accordance with generally accepted accounting practices. Subject to prior written notice, Owner will be afforded reasonable access, during normal business hours, to all Contractor's accounts, records, books, correspondence, instructions, drawings, receipts, vouchers, memoranda, and similar data relating to the Cost of the Work and Contractor's fee. Contractor shall preserve all such documents for a period of three years after the final payment by Owner. Pertinent Subcontractors will afford such access to Owner, and preserve such documents, to the same extent required of Contractor.

13.02 *Allowances*

A. It is understood that Contractor has included in the Contract Price all allowances so named in the Contract Documents and shall cause the Work so covered to be performed for such sums and by such persons or entities as may be acceptable to Owner and Engineer.

B. *Cash Allowances*: Contractor agrees that:

1. the cash allowances include the cost to Contractor (less any applicable trade discounts) of materials and equipment required by the allowances to be delivered at the Site, and all applicable taxes; and

2. Contractor's costs for unloading and handling on the Site, labor, installation, overhead, profit, and other expenses contemplated for the cash allowances have been included in the Contract Price and not in the allowances, and no demand for additional payment for any of the foregoing will be valid.

C. *Owner's Contingency Allowance*: Contractor agrees that an Owner's contingency allowance, if any, is for the sole use of Owner to cover unanticipated costs.

D. Prior to final payment, an appropriate Change Order will be issued as recommended by Engineer to reflect actual amounts due Contractor for Work covered by allowances, and the Contract Price will be correspondingly adjusted.

13.03 *Unit Price Work*

A. Where the Contract Documents provide that all or part of the Work is to be Unit Price Work, initially the Contract Price will be deemed to include for all Unit Price Work an amount equal to the sum of the unit price for each separately identified item of Unit Price Work times the estimated quantity of each item as indicated in the Agreement.

B. The estimated quantities of items of Unit Price Work are not guaranteed and are solely for the purpose of comparison of Bids and determining an initial Contract Price. Payments to Contractor for Unit Price Work will be based on actual quantities.

C. Each unit price will be deemed to include an amount considered by Contractor to be adequate to cover Contractor's overhead and profit for each separately identified item.

D. Engineer will determine the actual quantities and classifications of Unit Price Work performed by Contractor. Engineer will review with Contractor the Engineer's preliminary determinations on such matters before rendering a written decision thereon (by recommendation of an Application for Payment or otherwise). Engineer's written decision


**Copyright© 2018 National Society of Professional Engineers, American Council of Engineering Companies, and American Society of Civil Engineers. All rights reserved.**

thereon will be final and binding (except as modified by Engineer to reflect changed factual conditions or more accurate data) upon Owner and Contractor, and the final adjustment of Contract Price will be set forth in a Change Order, subject to the provisions of the following paragraph.

E. *Adjustments in Unit Price*

1. Contractor or Owner shall be entitled to an adjustment in the unit price with respect to an item of Unit Price Work if:

a. the quantity of the item of Unit Price Work performed by Contractor differs materially and significantly from the estimated quantity of such item indicated in the Agreement; and

b. Contractor's unit costs to perform the item of Unit Price Work have changed materially and significantly as a result of the quantity change.

2. The adjustment in unit price will account for and be coordinated with any related changes in quantities of other items of Work, and in Contractor's costs to perform such other Work, such that the resulting overall change in Contract Price is equitable to Owner and Contractor.

3. Adjusted unit prices will apply to all units of that item.

## ARTICLE 14—TESTS AND INSPECTIONS; CORRECTION, REMOVAL, OR ACCEPTANCE OF DEFECTIVE WORK

14.01 *Access to Work*

A. Owner, Engineer, their consultants and other representatives and personnel of Owner, independent testing laboratories, and authorities having jurisdiction have access to the Site and the Work at reasonable times for their observation, inspection, and testing. Contractor shall provide them proper and safe conditions for such access and advise them of Contractor's safety procedures and programs so that they may comply with such procedures and programs as applicable.

14.02 *Tests, Inspections, and Approvals*

A. Contractor shall give Engineer timely notice of readiness of the Work (or specific parts thereof) for all required inspections and tests, and shall cooperate with inspection and testing personnel to facilitate required inspections and tests.

B. Owner shall retain and pay for the services of an independent inspector, testing laboratory, or other qualified individual or entity to perform all inspections and tests expressly required by the Contract Documents to be furnished and paid for by Owner, except that costs incurred in connection with tests or inspections of covered Work will be governed by the provisions of Paragraph 14.05.

C. If Laws or Regulations of any public body having jurisdiction require any Work (or part thereof) specifically to be inspected, tested, or approved by an employee or other representative of such public body, Contractor shall assume full responsibility for arranging and obtaining such inspections, tests, or approvals, pay all costs in connection therewith, and furnish Engineer the required certificates of inspection or approval.


**Copyright© 2018 National Society of Professional Engineers, American Council of Engineering Companies, and American Society of Civil Engineers. All rights reserved.**

D. Contractor shall be responsible for arranging, obtaining, and paying for all inspections and tests required:

1. by the Contract Documents, unless the Contract Documents expressly allocate responsibility for a specific inspection or test to Owner;

2. to attain Owner's and Engineer's acceptance of materials or equipment to be incorporated in the Work;

3. by manufacturers of equipment furnished under the Contract Documents;

4. for testing, adjusting, and balancing of mechanical, electrical, and other equipment to be incorporated into the Work; and

5. for acceptance of materials, mix designs, or equipment submitted for approval prior to Contractor's purchase thereof for incorporation in the Work.

Such inspections and tests will be performed by independent inspectors, testing laboratories, or other qualified individuals or entities acceptable to Owner and Engineer.

E. If the Contract Documents require the Work (or part thereof) to be approved by Owner, Engineer, or another designated individual or entity, then Contractor shall assume full responsibility for arranging and obtaining such approvals.

F. If any Work (or the work of others) that is to be inspected, tested, or approved is covered by Contractor without written concurrence of Engineer, Contractor shall, if requested by Engineer, uncover such Work for observation. Such uncovering will be at Contractor's expense unless Contractor had given Engineer timely notice of Contractor's intention to cover the same and Engineer had not acted with reasonable promptness in response to such notice.

14.03 *Defective Work*

A. *Contractor's Obligation*: It is Contractor's obligation to assure that the Work is not defective.

B. *Engineer's Authority*: Engineer has the authority to determine whether Work is defective, and to reject defective Work.

C. *Notice of Defects*: Prompt written notice of all defective Work of which Owner or Engineer has actual knowledge will be given to Contractor.

D. *Correction, or Removal and Replacement*: Promptly after receipt of written notice of defective Work, Contractor shall correct all such defective Work, whether or not fabricated, installed, or completed, or, if Engineer has rejected the defective Work, remove it from the Project and replace it with Work that is not defective.

E. *Preservation of Warranties*: When correcting defective Work, Contractor shall take no action that would void or otherwise impair Owner's special warranty and guarantee, if any, on said Work.

F. *Costs and Damages*: In addition to its correction, removal, and replacement obligations with respect to defective Work, Contractor shall pay all claims, costs, losses, and damages arising out of or relating to defective Work, including but not limited to the cost of the inspection, testing, correction, removal, replacement, or reconstruction of such defective Work, fines levied against Owner by governmental authorities because the Work is defective, and the costs of repair or replacement of work of others resulting from defective Work. Prior to final payment, if Owner and Contractor are unable to agree as to the measure of such claims, costs,


**Copyright© 2018 National Society of Professional Engineers, American Council of Engineering Companies, and American Society of Civil Engineers. All rights reserved.**

losses, and damages resulting from defective Work, then Owner may impose a reasonable set-off against payments due under Article 15.

14.04 *Acceptance of Defective Work*

A. If, instead of requiring correction or removal and replacement of defective Work, Owner prefers to accept it, Owner may do so (subject, if such acceptance occurs prior to final payment, to Engineer's confirmation that such acceptance is in general accord with the design intent and applicable engineering principles, and will not endanger public safety). Contractor shall pay all claims, costs, losses, and damages attributable to Owner's evaluation of and determination to accept such defective Work (such costs to be approved by Engineer as to reasonableness), and for the diminished value of the Work to the extent not otherwise paid by Contractor. If any such acceptance occurs prior to final payment, the necessary revisions in the Contract Documents with respect to the Work will be incorporated in a Change Order. If the parties are unable to agree as to the decrease in the Contract Price, reflecting the diminished value of Work so accepted, then Owner may impose a reasonable set-off against payments due under Article 15. If the acceptance of defective Work occurs after final payment, Contractor shall pay an appropriate amount to Owner.

14.05 *Uncovering Work*

A. Engineer has the authority to require additional inspection or testing of the Work, whether or not the Work is fabricated, installed, or completed.

B. If any Work is covered contrary to the written request of Engineer, then Contractor shall, if requested by Engineer, uncover such Work for Engineer's observation, and then replace the covering, all at Contractor's expense.

C. If Engineer considers it necessary or advisable that covered Work be observed by Engineer or inspected or tested by others, then Contractor, at Engineer's request, shall uncover, expose, or otherwise make available for observation, inspection, or testing as Engineer may require, that portion of the Work in question, and provide all necessary labor, material, and equipment.

1. If it is found that the uncovered Work is defective, Contractor shall be responsible for all claims, costs, losses, and damages arising out of or relating to such uncovering, exposure, observation, inspection, and testing, and of satisfactory replacement or reconstruction (including but not limited to all costs of repair or replacement of work of others); and pending Contractor's full discharge of this responsibility the Owner shall be entitled to impose a reasonable set-off against payments due under Article 15.

2. If the uncovered Work is not found to be defective, Contractor shall be allowed an increase in the Contract Price or an extension of the Contract Times, directly attributable to such uncovering, exposure, observation, inspection, testing, replacement, and reconstruction. If the parties are unable to agree as to the amount or extent thereof, then Contractor may submit a Change Proposal within 30 days of the determination that the Work is not defective.

14.06 *Owner May Stop the Work*

A. If the Work is defective, or Contractor fails to supply sufficient skilled workers or suitable materials or equipment, or fails to perform the Work in such a way that the completed Work will conform to the Contract Documents, then Owner may order Contractor to stop the Work,


**Copyright© 2018 National Society of Professional Engineers, American Council of Engineering Companies, and American Society of Civil Engineers. All rights reserved.**

or any portion thereof, until the cause for such order has been eliminated; however, this right of Owner to stop the Work will not give rise to any duty on the part of Owner to exercise this right for the benefit of Contractor, any Subcontractor, any Supplier, any other individual or entity, or any surety for, or employee or agent of any of them.

14.07 *Owner May Correct Defective Work*

A. If Contractor fails within a reasonable time after written notice from Engineer to correct defective Work, or to remove and replace defective Work as required by Engineer, then Owner may, after 7 days' written notice to Contractor, correct or remedy any such deficiency.

B. In exercising the rights and remedies under this Paragraph 14.07, Owner shall proceed expeditiously. In connection with such corrective or remedial action, Owner may exclude Contractor from all or part of the Site, take possession of all or part of the Work and suspend Contractor's services related thereto, and incorporate in the Work all materials and equipment stored at the Site or for which Owner has paid Contractor but which are stored elsewhere. Contractor shall allow Owner, Owner's representatives, agents and employees, Owner's other contractors, and Engineer and Engineer's consultants access to the Site to enable Owner to exercise the rights and remedies under this paragraph.

C. All claims, costs, losses, and damages incurred or sustained by Owner in exercising the rights and remedies under this Paragraph 14.07 will be charged against Contractor as set-offs against payments due under Article 15. Such claims, costs, losses and damages will include but not be limited to all costs of repair, or replacement of work of others destroyed or damaged by correction, removal, or replacement of Contractor's defective Work.

D. Contractor shall not be allowed an extension of the Contract Times because of any delay in the performance of the Work attributable to the exercise by Owner of Owner's rights and remedies under this Paragraph 14.07.

**ARTICLE 15—PAYMENTS TO CONTRACTOR; SET-OFFS; COMPLETION; CORRECTION PERIOD**

15.01 *Progress Payments*

A. *Basis for Progress Payments*: The Schedule of Values established as provided in Article 2 will serve as the basis for progress payments and will be incorporated into a form of Application for Payment acceptable to Engineer. Progress payments for Unit Price Work will be based on the number of units completed during the pay period, as determined under the provisions of Paragraph 13.03. Progress payments for cost-based Work will be based on Cost of the Work completed by Contractor during the pay period.

B. *Applications for Payments*

1. At least 20 days before the date established in the Agreement for each progress payment (but not more often than once a month), Contractor shall submit to Engineer for review an Application for Payment filled out and signed by Contractor covering the Work completed as of the date of the Application and accompanied by such supporting documentation as is required by the Contract Documents.

2. If payment is requested on the basis of materials and equipment not incorporated in the Work but delivered and suitably stored at the Site or at another location agreed to in writing, the Application for Payment must also be accompanied by: (a) a bill of sale, invoice, copies of subcontract or purchase order payments, or other documentation


**Copyright© 2018 National Society of Professional Engineers, American Council of Engineering Companies, and American Society of Civil Engineers. All rights reserved.**

establishing full payment by Contractor for the materials and equipment; (b) at Owner's request, documentation warranting that Owner has received the materials and equipment free and clear of all Liens; and (c) evidence that the materials and equipment are covered by appropriate property insurance, a warehouse bond, or other arrangements to protect Owner's interest therein, all of which must be satisfactory to Owner.

3. Beginning with the second Application for Payment, each Application must include an affidavit of Contractor stating that all previous progress payments received by Contractor have been applied to discharge Contractor's legitimate obligations associated with prior Applications for Payment.

4. The amount of retainage with respect to progress payments will be as stipulated in the Agreement.

C. *Review of Applications*

1. Engineer will, within 10 days after receipt of each Application for Payment, including each resubmittal, either indicate in writing a recommendation of payment and present the Application to Owner, or return the Application to Contractor indicating in writing Engineer's reasons for refusing to recommend payment. In the latter case, Contractor may make the necessary corrections and resubmit the Application.

2. Engineer's recommendation of any payment requested in an Application for Payment will constitute a representation by Engineer to Owner, based on Engineer's observations of the executed Work as an experienced and qualified design professional, and on Engineer's review of the Application for Payment and the accompanying data and schedules, that to the best of Engineer's knowledge, information and belief:

   a. the Work has progressed to the point indicated;

   b. the quality of the Work is generally in accordance with the Contract Documents (subject to an evaluation of the Work as a functioning whole prior to or upon Substantial Completion, the results of any subsequent tests called for in the Contract Documents, a final determination of quantities and classifications for Unit Price Work under Paragraph 13.03, and any other qualifications stated in the recommendation); and

   c. the conditions precedent to Contractor's being entitled to such payment appear to have been fulfilled in so far as it is Engineer's responsibility to observe the Work.

3. By recommending any such payment Engineer will not thereby be deemed to have represented that:

   a. inspections made to check the quality or the quantity of the Work as it has been performed have been exhaustive, extended to every aspect of the Work in progress, or involved detailed inspections of the Work beyond the responsibilities specifically assigned to Engineer in the Contract; or

   b. there may not be other matters or issues between the parties that might entitle Contractor to be paid additionally by Owner or entitle Owner to withhold payment to Contractor.


**Copyright© 2018 National Society of Professional Engineers, American Council of Engineering Companies, and American Society of Civil Engineers. All rights reserved.**

4. Neither Engineer's review of Contractor's Work for the purposes of recommending payments nor Engineer's recommendation of any payment, including final payment, will impose responsibility on Engineer:

    a. to supervise, direct, or control the Work;

    b. for the means, methods, techniques, sequences, or procedures of construction, or the safety precautions and programs incident thereto;

    c. for Contractor's failure to comply with Laws and Regulations applicable to Contractor's performance of the Work;

    d. to make any examination to ascertain how or for what purposes Contractor has used the money paid by Owner; or

    e. to determine that title to any of the Work, materials, or equipment has passed to Owner free and clear of any Liens.

5. Engineer may refuse to recommend the whole or any part of any payment if, in Engineer's opinion, it would be incorrect to make the representations to Owner stated in Paragraph 15.01.C.2.

6. Engineer will recommend reductions in payment (set-offs) necessary in Engineer's opinion to protect Owner from loss because:

    a. the Work is defective, requiring correction or replacement;

    b. the Contract Price has been reduced by Change Orders;

    c. Owner has been required to correct defective Work in accordance with Paragraph 14.07, or has accepted defective Work pursuant to Paragraph 14.04;

    d. Owner has been required to remove or remediate a Hazardous Environmental Condition for which Contractor is responsible; or

    e. Engineer has actual knowledge of the occurrence of any of the events that would constitute a default by Contractor and therefore justify termination for cause under the Contract Documents.

D. *Payment Becomes Due*

1. Ten days after presentation of the Application for Payment to Owner with Engineer's recommendation, the amount recommended (subject to any Owner set-offs) will become due, and when due will be paid by Owner to Contractor.

E. *Reductions in Payment by Owner*

1. In addition to any reductions in payment (set-offs) recommended by Engineer, Owner is entitled to impose a set-off against payment based on any of the following:

    a. Claims have been made against Owner based on Contractor's conduct in the performance or furnishing of the Work, or Owner has incurred costs, losses, or damages resulting from Contractor's conduct in the performance or furnishing of the Work, including but not limited to claims, costs, losses, or damages from workplace injuries, adjacent property damage, non-compliance with Laws and Regulations, and patent infringement;


**Copyright© 2018 National Society of Professional Engineers, American Council of Engineering Companies, and American Society of Civil Engineers. All rights reserved.**

b. Contractor has failed to take reasonable and customary measures to avoid damage, delay, disruption, and interference with other work at or adjacent to the Site;

c. Contractor has failed to provide and maintain required bonds or insurance;

d. Owner has been required to remove or remediate a Hazardous Environmental Condition for which Contractor is responsible;

e. Owner has incurred extra charges or engineering costs related to submittal reviews, evaluations of proposed substitutes, tests and inspections, or return visits to manufacturing or assembly facilities;

f. The Work is defective, requiring correction or replacement;

g. Owner has been required to correct defective Work in accordance with Paragraph 14.07, or has accepted defective Work pursuant to Paragraph 14.04;

h. The Contract Price has been reduced by Change Orders;

i. An event has occurred that would constitute a default by Contractor and therefore justify a termination for cause;

j. Liquidated or other damages have accrued as a result of Contractor's failure to achieve Milestones, Substantial Completion, or final completion of the Work;

k. Liens have been filed in connection with the Work, except where Contractor has delivered a specific bond satisfactory to Owner to secure the satisfaction and discharge of such Liens; or

l. Other items entitle Owner to a set-off against the amount recommended.

2. If Owner imposes any set-off against payment, whether based on its own knowledge or on the written recommendations of Engineer, Owner will give Contractor immediate written notice (with a copy to Engineer) stating the reasons for such action and the specific amount of the reduction, and promptly pay Contractor any amount remaining after deduction of the amount so withheld. Owner shall promptly pay Contractor the amount so withheld, or any adjustment thereto agreed to by Owner and Contractor, if Contractor remedies the reasons for such action. The reduction imposed will be binding on Contractor unless it duly submits a Change Proposal contesting the reduction.

3. Upon a subsequent determination that Owner's refusal of payment was not justified, the amount wrongfully withheld will be treated as an amount due as determined by Paragraph 15.01.D.1 and subject to interest as provided in the Agreement.

15.02 *Contractor's Warranty of Title*

A. Contractor warrants and guarantees that title to all Work, materials, and equipment furnished under the Contract will pass to Owner free and clear of (1) all Liens and other title defects, and (2) all patent, licensing, copyright, or royalty obligations, no later than 7 days after the time of payment by Owner.

15.03 *Substantial Completion*

A. When Contractor considers the entire Work ready for its intended use Contractor shall notify Owner and Engineer in writing that the entire Work is substantially complete and request that Engineer issue a certificate of Substantial Completion. Contractor shall at the same time


**Copyright© 2018 National Society of Professional Engineers, American Council of Engineering Companies, and American Society of Civil Engineers. All rights reserved.**

submit to Owner and Engineer an initial draft of punch list items to be completed or corrected before final payment.

B. Promptly after Contractor's notification, Owner, Contractor, and Engineer shall make an inspection of the Work to determine the status of completion. If Engineer does not consider the Work substantially complete, Engineer will notify Contractor in writing giving the reasons therefor.

C. If Engineer considers the Work substantially complete, Engineer will deliver to Owner a preliminary certificate of Substantial Completion which will fix the date of Substantial Completion. Engineer shall attach to the certificate a punch list of items to be completed or corrected before final payment. Owner shall have 7 days after receipt of the preliminary certificate during which to make written objection to Engineer as to any provisions of the certificate or attached punch list. If, after considering the objections to the provisions of the preliminary certificate, Engineer concludes that the Work is not substantially complete, Engineer will, within 14 days after submission of the preliminary certificate to Owner, notify Contractor in writing that the Work is not substantially complete, stating the reasons therefor. If Owner does not object to the provisions of the certificate, or if despite consideration of Owner's objections Engineer concludes that the Work is substantially complete, then Engineer will, within said 14 days, execute and deliver to Owner and Contractor a final certificate of Substantial Completion (with a revised punch list of items to be completed or corrected) reflecting such changes from the preliminary certificate as Engineer believes justified after consideration of any objections from Owner.

D. At the time of receipt of the preliminary certificate of Substantial Completion, Owner and Contractor will confer regarding Owner's use or occupancy of the Work following Substantial Completion, review the builder's risk insurance policy with respect to the end of the builder's risk coverage, and confirm the transition to coverage of the Work under a permanent property insurance policy held by Owner. Unless Owner and Contractor agree otherwise in writing, Owner shall bear responsibility for security, operation, protection of the Work, property insurance, maintenance, heat, and utilities upon Owner's use or occupancy of the Work.

E. After Substantial Completion the Contractor shall promptly begin work on the punch list of items to be completed or corrected prior to final payment. In appropriate cases Contractor may submit monthly Applications for Payment for completed punch list items, following the progress payment procedures set forth above.

F. Owner shall have the right to exclude Contractor from the Site after the date of Substantial Completion subject to allowing Contractor reasonable access to remove its property and complete or correct items on the punch list.

15.04 *Partial Use or Occupancy*

A. Prior to Substantial Completion of all the Work, Owner may use or occupy any substantially completed part of the Work which has specifically been identified in the Contract Documents, or which Owner, Engineer, and Contractor agree constitutes a separately functioning and usable part of the Work that can be used by Owner for its intended purpose without


**Copyright© 2018 National Society of Professional Engineers, American Council of Engineering Companies, and American Society of Civil Engineers. All rights reserved.**

significant interference with Contractor's performance of the remainder of the Work, subject to the following conditions:

1. At any time, Owner may request in writing that Contractor permit Owner to use or occupy any such part of the Work that Owner believes to be substantially complete. If and when Contractor agrees that such part of the Work is substantially complete, Contractor, Owner, and Engineer will follow the procedures of Paragraph 15.03.A through 15.03.E for that part of the Work.

2. At any time, Contractor may notify Owner and Engineer in writing that Contractor considers any such part of the Work substantially complete and request Engineer to issue a certificate of Substantial Completion for that part of the Work.

3. Within a reasonable time after either such request, Owner, Contractor, and Engineer shall make an inspection of that part of the Work to determine its status of completion. If Engineer does not consider that part of the Work to be substantially complete, Engineer will notify Owner and Contractor in writing giving the reasons therefor. If Engineer considers that part of the Work to be substantially complete, the provisions of Paragraph 15.03 will apply with respect to certification of Substantial Completion of that part of the Work and the division of responsibility in respect thereof and access thereto.

4. No use or occupancy or separate operation of part of the Work may occur prior to compliance with the requirements of Paragraph 6.04 regarding builder's risk or other property insurance.

15.05 *Final Inspection*

A. Upon written notice from Contractor that the entire Work or an agreed portion thereof is complete, Engineer will promptly make a final inspection with Owner and Contractor and will notify Contractor in writing of all particulars in which this inspection reveals that the Work, or agreed portion thereof, is incomplete or defective. Contractor shall immediately take such measures as are necessary to complete such Work or remedy such deficiencies.

15.06 *Final Payment*

A. *Application for Payment*

1. After Contractor has, in the opinion of Engineer, satisfactorily completed all corrections identified during the final inspection and has delivered, in accordance with the Contract Documents, all maintenance and operating instructions, schedules, guarantees, bonds, certificates or other evidence of insurance, certificates of inspection, annotated record documents (as provided in Paragraph 7.12), and other documents, Contractor may make application for final payment.

2. The final Application for Payment must be accompanied (except as previously delivered) by:

   a. all documentation called for in the Contract Documents;

   b. consent of the surety, if any, to final payment;

   c. satisfactory evidence that all title issues have been resolved such that title to all Work, materials, and equipment has passed to Owner free and clear of any Liens or other title defects, or will so pass upon final payment.


**Copyright© 2018 National Society of Professional Engineers, American Council of Engineering Companies, and American Society of Civil Engineers. All rights reserved.**

d. a list of all duly pending Change Proposals and Claims; and

e. complete and legally effective releases or waivers (satisfactory to Owner) of all Lien rights arising out of the Work, and of Liens filed in connection with the Work.

3. In lieu of the releases or waivers of Liens specified in Paragraph 15.06.A.2 and as approved by Owner, Contractor may furnish receipts or releases in full and an affidavit of Contractor that: (a) the releases and receipts include all labor, services, material, and equipment for which a Lien could be filed; and (b) all payrolls, material and equipment bills, and other indebtedness connected with the Work for which Owner might in any way be responsible, or which might in any way result in liens or other burdens on Owner's property, have been paid or otherwise satisfied. If any Subcontractor or Supplier fails to furnish such a release or receipt in full, Contractor may furnish a bond or other collateral satisfactory to Owner to indemnify Owner against any Lien, or Owner at its option may issue joint checks payable to Contractor and specified Subcontractors and Suppliers.

B. *Engineer's Review of Final Application and Recommendation of Payment*: If, on the basis of Engineer's observation of the Work during construction and final inspection, and Engineer's review of the final Application for Payment and accompanying documentation as required by the Contract Documents, Engineer is satisfied that the Work has been completed and Contractor's other obligations under the Contract have been fulfilled, Engineer will, within 10 days after receipt of the final Application for Payment, indicate in writing Engineer's recommendation of final payment and present the final Application for Payment to Owner for payment. Such recommendation will account for any set-offs against payment that are necessary in Engineer's opinion to protect Owner from loss for the reasons stated above with respect to progress payments. Otherwise, Engineer will return the Application for Payment to Contractor, indicating in writing the reasons for refusing to recommend final payment, in which case Contractor shall make the necessary corrections and resubmit the Application for Payment.

C. *Notice of Acceptability*: In support of its recommendation of payment of the final Application for Payment, Engineer will also give written notice to Owner and Contractor that the Work is acceptable, subject to stated limitations in the notice and to the provisions of Paragraph 15.07.

D. *Completion of Work*: The Work is complete (subject to surviving obligations) when it is ready for final payment as established by the Engineer's written recommendation of final payment and issuance of notice of the acceptability of the Work.

E. *Final Payment Becomes Due*: Upon receipt from Engineer of the final Application for Payment and accompanying documentation, Owner shall set off against the amount recommended by Engineer for final payment any further sum to which Owner is entitled, including but not limited to set-offs for liquidated damages and set-offs allowed under the provisions of this Contract with respect to progress payments. Owner shall pay the resulting balance due to Contractor within 30 days of Owner's receipt of the final Application for Payment from Engineer.

15.07 *Waiver of Claims*

A. By making final payment, Owner waives its claim or right to liquidated damages or other damages for late completion by Contractor, except as set forth in an outstanding Claim,


**Copyright© 2018 National Society of Professional Engineers, American Council of Engineering Companies, and American Society of Civil Engineers. All rights reserved.**

appeal under the provisions of Article 17, set-off, or express reservation of rights by Owner. Owner reserves all other claims or rights after final payment.

B. The acceptance of final payment by Contractor will constitute a waiver by Contractor of all claims and rights against Owner other than those pending matters that have been duly submitted as a Claim, or appealed under the provisions of Article 17.

15.08 *Correction Period*

A. If within one year after the date of Substantial Completion (or such longer period of time as may be prescribed by the Supplementary Conditions or the terms of any applicable special guarantee required by the Contract Documents), Owner gives Contractor written notice that any Work has been found to be defective, or that Contractor's repair of any damages to the Site or adjacent areas has been found to be defective, then after receipt of such notice of defect Contractor shall promptly, without cost to Owner and in accordance with Owner's written instructions:

1. correct the defective repairs to the Site or such adjacent areas;
2. correct such defective Work;
3. remove the defective Work from the Project and replace it with Work that is not defective, if the defective Work has been rejected by Owner, and
4. satisfactorily correct or repair or remove and replace any damage to other Work, to the work of others, or to other land or areas resulting from the corrective measures.

B. Owner shall give any such notice of defect within 60 days of the discovery that such Work or repairs is defective. If such notice is given within such 60 days but after the end of the correction period, the notice will be deemed a notice of defective Work under Paragraph 7.17.B.

C. If, after receipt of a notice of defect within 60 days and within the correction period, Contractor does not promptly comply with the terms of Owner's written instructions, or in an emergency where delay would cause serious risk of loss or damage, Owner may have the defective Work corrected or repaired or may have the rejected Work removed and replaced. Contractor shall pay all costs, losses, and damages (including but not limited to all fees and charges of engineers, architects, attorneys, and other professionals and all court or arbitration or other dispute resolution costs) arising out of or relating to such correction or repair or such removal and replacement (including but not limited to all costs of repair or replacement of work of others). Contractor's failure to pay such costs, losses, and damages within 10 days of invoice from Owner will be deemed the start of an event giving rise to a Claim under Paragraph 12.01.B, such that any related Claim must be brought within 30 days of the failure to pay.

D. In special circumstances where a particular item of equipment is placed in continuous service before Substantial Completion of all the Work, the correction period for that item may start to run from an earlier date if so provided in the Specifications.

E. Where defective Work (and damage to other Work resulting therefrom) has been corrected or removed and replaced under this paragraph, the correction period hereunder with respect to such Work will be extended for an additional period of one year after such correction or removal and replacement has been satisfactorily completed.


**Copyright© 2018 National Society of Professional Engineers, American Council of Engineering Companies, and American Society of Civil Engineers. All rights reserved.**

F. Contractor's obligations under this paragraph are in addition to all other obligations and warranties. The provisions of this paragraph are not to be construed as a substitute for, or a waiver of, the provisions of any applicable statute of limitation or repose.

**ARTICLE 16—SUSPENSION OF WORK AND TERMINATION**

16.01 *Owner May Suspend Work*

A. At any time and without cause, Owner may suspend the Work or any portion thereof for a period of not more than 90 consecutive days by written notice to Contractor and Engineer. Such notice will fix the date on which Work will be resumed. Contractor shall resume the Work on the date so fixed. Contractor shall be entitled to an adjustment in the Contract Price or an extension of the Contract Times directly attributable to any such suspension. Any Change Proposal seeking such adjustments must be submitted no later than 30 days after the date fixed for resumption of Work.

16.02 *Owner May Terminate for Cause*

A. The occurrence of any one or more of the following events will constitute a default by Contractor and justify termination for cause:

1. Contractor's persistent failure to perform the Work in accordance with the Contract Documents (including, but not limited to, failure to supply sufficient skilled workers or suitable materials or equipment, or failure to adhere to the Progress Schedule);

2. Failure of Contractor to perform or otherwise to comply with a material term of the Contract Documents;

3. Contractor's disregard of Laws or Regulations of any public body having jurisdiction; or

4. Contractor's repeated disregard of the authority of Owner or Engineer.

B. If one or more of the events identified in Paragraph 16.02.A occurs, then after giving Contractor (and any surety) 10 days' written notice that Owner is considering a declaration that Contractor is in default and termination of the Contract, Owner may proceed to:

1. declare Contractor to be in default, and give Contractor (and any surety) written notice that the Contract is terminated; and

2. enforce the rights available to Owner under any applicable performance bond.

C. Subject to the terms and operation of any applicable performance bond, if Owner has terminated the Contract for cause, Owner may exclude Contractor from the Site, take possession of the Work, incorporate in the Work all materials and equipment stored at the Site or for which Owner has paid Contractor but which are stored elsewhere, and complete the Work as Owner may deem expedient.

D. Owner may not proceed with termination of the Contract under Paragraph 16.02.B if Contractor within 7 days of receipt of notice of intent to terminate begins to correct its failure to perform and proceeds diligently to cure such failure.

E. If Owner proceeds as provided in Paragraph 16.02.B, Contractor shall not be entitled to receive any further payment until the Work is completed. If the unpaid balance of the Contract Price exceeds the cost to complete the Work, including all related claims, costs, losses, and damages (including but not limited to all fees and charges of engineers, architects,


**Copyright© 2018 National Society of Professional Engineers, American Council of Engineering Companies, and American Society of Civil Engineers. All rights reserved.**

attorneys, and other professionals) sustained by Owner, such excess will be paid to Contractor. If the cost to complete the Work including such related claims, costs, losses, and damages exceeds such unpaid balance, Contractor shall pay the difference to Owner. Such claims, costs, losses, and damages incurred by Owner will be reviewed by Engineer as to their reasonableness and, when so approved by Engineer, incorporated in a Change Order. When exercising any rights or remedies under this paragraph, Owner shall not be required to obtain the lowest price for the Work performed.

F. Where Contractor's services have been so terminated by Owner, the termination will not affect any rights or remedies of Owner against Contractor then existing or which may thereafter accrue, or any rights or remedies of Owner against Contractor or any surety under any payment bond or performance bond. Any retention or payment of money due Contractor by Owner will not release Contractor from liability.

G. If and to the extent that Contractor has provided a performance bond under the provisions of Paragraph 6.01.A, the provisions of that bond will govern over any inconsistent provisions of Paragraphs 16.02.B and 16.02.D.

16.03 *Owner May Terminate for Convenience*

A. Upon 7 days' written notice to Contractor and Engineer, Owner may, without cause and without prejudice to any other right or remedy of Owner, terminate the Contract. In such case, Contractor shall be paid for (without duplication of any items):

1. completed and acceptable Work executed in accordance with the Contract Documents prior to the effective date of termination, including fair and reasonable sums for overhead and profit on such Work;

2. expenses sustained prior to the effective date of termination in performing services and furnishing labor, materials, or equipment as required by the Contract Documents in connection with uncompleted Work, plus fair and reasonable sums for overhead and profit on such expenses; and

3. other reasonable expenses directly attributable to termination, including costs incurred to prepare a termination for convenience cost proposal.

B. Contractor shall not be paid for any loss of anticipated profits or revenue, post-termination overhead costs, or other economic loss arising out of or resulting from such termination.

16.04 *Contractor May Stop Work or Terminate*

A. If, through no act or fault of Contractor, (1) the Work is suspended for more than 90 consecutive days by Owner or under an order of court or other public authority, or (2) Engineer fails to act on any Application for Payment within 30 days after it is submitted, or (3) Owner fails for 30 days to pay Contractor any sum finally determined to be due, then Contractor may, upon 7 days' written notice to Owner and Engineer, and provided Owner or Engineer do not remedy such suspension or failure within that time, terminate the contract and recover from Owner payment on the same terms as provided in Paragraph 16.03.

B. In lieu of terminating the Contract and without prejudice to any other right or remedy, if Engineer has failed to act on an Application for Payment within 30 days after it is submitted, or Owner has failed for 30 days to pay Contractor any sum finally determined to be due, Contractor may, 7 days after written notice to Owner and Engineer, stop the Work until payment is made of all such amounts due Contractor, including interest thereon. The


**Copyright© 2018 National Society of Professional Engineers, American Council of Engineering Companies, and American Society of Civil Engineers. All rights reserved.**

provisions of this paragraph are not intended to preclude Contractor from submitting a Change Proposal for an adjustment in Contract Price or Contract Times or otherwise for expenses or damage directly attributable to Contractor's stopping the Work as permitted by this paragraph.

**ARTICLE 17—FINAL RESOLUTION OF DISPUTES**

17.01 *Methods and Procedures*

A. *Disputes Subject to Final Resolution*: The following disputed matters are subject to final resolution under the provisions of this article:

1. A timely appeal of an approval in part and denial in part of a Claim, or of a denial in full, pursuant to Article 12; and

2. Disputes between Owner and Contractor concerning the Work, or obligations under the Contract Documents, that arise after final payment has been made.

B. *Final Resolution of Disputes*: For any dispute subject to resolution under this article, Owner or Contractor may:

1. elect in writing to invoke the dispute resolution process provided for in the Supplementary Conditions;

2. agree with the other party to submit the dispute to another dispute resolution process; or

3. if no dispute resolution process is provided for in the Supplementary Conditions or mutually agreed to, give written notice to the other party of the intent to submit the dispute to a court of competent jurisdiction.

**ARTICLE 18—MISCELLANEOUS**

18.01 *Giving Notice*

A. Whenever any provision of the Contract requires the giving of written notice to Owner, Engineer, or Contractor, it will be deemed to have been validly given only if delivered:

1. in person, by a commercial courier service or otherwise, to the recipient's place of business;

2. by registered or certified mail, postage prepaid, to the recipient's place of business; or

3. by e-mail to the recipient, with the words "Formal Notice" or similar in the e-mail's subject line.

18.02 *Computation of Times*

A. When any period of time is referred to in the Contract by days, it will be computed to exclude the first and include the last day of such period. If the last day of any such period falls on a Saturday or Sunday or on a day made a legal holiday by the law of the applicable jurisdiction, such day will be omitted from the computation.


**Copyright© 2018 National Society of Professional Engineers, American Council of Engineering Companies, and American Society of Civil Engineers. All rights reserved.**

18.03 *Cumulative Remedies*

A. The duties and obligations imposed by these General Conditions and the rights and remedies available hereunder to the parties hereto are in addition to, and are not to be construed in any way as a limitation of, any rights and remedies available to any or all of them which are otherwise imposed or available by Laws or Regulations, by special warranty or guarantee, or by other provisions of the Contract. The provisions of this paragraph will be as effective as if repeated specifically in the Contract Documents in connection with each particular duty, obligation, right, and remedy to which they apply.

18.04 *Limitation of Damages*

A. With respect to any and all Change Proposals, Claims, disputes subject to final resolution, and other matters at issue, neither Owner nor Engineer, nor any of their officers, directors, members, partners, employees, agents, consultants, or subcontractors, shall be liable to Contractor for any claims, costs, losses, or damages sustained by Contractor on or in connection with any other project or anticipated project.

18.05 *No Waiver*

A. A party's non-enforcement of any provision will not constitute a waiver of that provision, nor will it affect the enforceability of that provision or of the remainder of this Contract.

18.06 *Survival of Obligations*

A. All representations, indemnifications, warranties, and guarantees made in, required by, or given in accordance with the Contract, as well as all continuing obligations indicated in the Contract, will survive final payment, completion, and acceptance of the Work or termination of the Contract or of the services of Contractor.

18.07 *Controlling Law*

A. This Contract is to be governed by the law of the state in which the Project is located.

18.08 *Assignment of Contract*

A. Unless expressly agreed to elsewhere in the Contract, no assignment by a party to this Contract of any rights under or interests in the Contract will be binding on the other party without the written consent of the party sought to be bound; and, specifically but without limitation, money that may become due and money that is due may not be assigned without such consent (except to the extent that the effect of this restriction may be limited by law), and unless specifically stated to the contrary in any written consent to an assignment, no assignment will release or discharge the assignor from any duty or responsibility under the Contract.

18.09 *Successors and Assigns*

A. Owner and Contractor each binds itself, its successors, assigns, and legal representatives to the other party hereto, its successors, assigns, and legal representatives in respect to all covenants, agreements, and obligations contained in the Contract Documents.

18.10 *Headings*

A. Article and paragraph headings are inserted for convenience only and do not constitute parts of these General Conditions.


**Copyright© 2018 National Society of Professional Engineers, American Council of Engineering Companies, and American Society of Civil Engineers. All rights reserved.**

# SUPPLEMENTARY CONDITIONS OF THE CONSTRUCTION CONTRACT

## TABLE OF CONTENTS


**Page**

Article 1— Definitions and Terminology ..... 2

Article 2— Preliminary Matters ..... 2

Article 3— Contract Documents: Intent, Requirements, Reuse ..... 3

Article 4— Commencement and Progress of the Work ..... 3

Article 5— Site, Subsurface and Physical Conditions, Hazardous Environmental COnditions ..... 4

Article 6— Bonds and Insurance ..... 5

Article 7— Contractor's Responsibilities ..... 10

Article 8— Other Work at the Site ..... 15

Article 9— Owner's Responsibilities ..... 15

Article 10— Engineer's Status During Construction ..... 15

Article 11— Changes to the Contract ..... 17

Article 12— Claims ..... 17

Article 13— Cost of Work; Allowances, Unit Price Work ..... 17

Article 14— Tests and Inspections; Correction, Removal, or Acceptance of Defective Work ..... 18

Article 15— Payments to Contractor, Set Offs; Completions; Correction Period ..... 18

Article 16— Suspension of Work and Termination ..... 19

Article 17— Final Resolutions of Disputes ..... 19

Article 18— Miscellaneous ..... 19

Exhibit A— Forms associated with sales and use tax exemption program for procurement of materials, by owner, to be incorporated into this project ..... 20




**Copyright© 2018 National Society of Professional Engineers, American Council of Engineering Companies, and American Society of Civil Engineers. All rights reserved.**

# SUPPLEMENTARY CONDITIONS OF THE CONSTRUCTION CONTRACT

These Supplementary Conditions amend or supplement EJCDC® C-700, Standard General Conditions of the Construction Contract (2018). The General Conditions remain in full force and effect except as amended.

The terms used in these Supplementary Conditions have the meanings stated in the General Conditions. Additional terms used in these Supplementary Conditions have the meanings stated below, which are applicable to both the singular and plural thereof.

The address system used in these Supplementary Conditions is the same as the address system used in the General Conditions, with the prefix "SC" added—for example, “Paragraph SC-4.05.”

**ARTICLE 1—DEFINITIONS AND TERMINOLOGY**

SC - 1.01.A.22 Add the following language to the definition of Engineer. The additional language should be added immediately after the end of the first sentence of Item 1.01.A.22.

The term Engineer in this Contract refers to either or all of the following: the Design Engineer, the Owner’s Engineer serving as Owner’s project manager and Engineer during construction, another Engineer from whom Owner seeks expertise or guidance during construction of the Work. Engineer may be employed directly by Owner, or be a consultant of Owner.

SC - 1.01.A.30 Add the following language to the definition of Owner. The additional language should be added immediately after the end of the first sentence of Item 1.01.A.30, as follows:

Owner will administer the Contract during construction.

SC - 1.01.A.33 Add the following language to the definition of Resident Project Representative immediately after the 2nd sentence of Item 1.01.A.33.

Owner will provide the RPR. RPR may be an employee of Owner or a consultant of Owner.

**ARTICLE 2—PRELIMINARY MATTERS**

2.02 *Copies of Documents*

SC-2.02 Delete Paragraph 2.02.A in its entirety and insert the following new paragraph in its place:

A. Owner shall furnish to Contractor two printed copies of conformed Contract Documents incorporating and integrating all Addenda and any amendments negotiated prior to the Effective Date of the Contract (including one fully signed counterpart of the Agreement), and one copy in electronic portable document format (PDF). Additional printed copies of the conformed Contract Documents will be furnished upon request at the cost of reproduction. In addition, Owner shall furnish to Contractor two full size (24”x36”) sets of Conformed Construction Drawings, two reduced size (11”x17”) sets of Conformed


**Copyright© 2018 National Society of Professional Engineers, American Council of Engineering Companies, and American Society of Civil Engineers. All rights reserved.**

Construction Drawings, and one electronic copy of Conformed Construction Drawings in PDF and AutoCAD formats. AutoCAD format is provided solely for Contractor's use in preparing and providing Owner with Record Drawings.

SC-2.05A Delete the Paragraph 2.05A in its entirety and insert the following new paragraph in its place. Paragraphs 2.05A.1, 2.05.A.2, 2.05.A.3 and 2.05.A.4 shall remain as written.

A. At least 10 days before submission of the first Application for Payment, Contractor shall submit to Owner, a draft Application for Payment based on the schedule of values accepted by Owner in response to the Contractor's schedule of values submitted in accordance with Paragraph 2.03.A.3. No progress payment will be made to Contractor until acceptable schedules are submitted to Owner.

**ARTICLE 3—CONTRACT DOCUMENTS: INTENT, REQUIREMENTS, REUSE**

3.01 *Intent*

SC-3.01.E Delete Paragraph 3.01.E in its entirety and insert the following new paragraph:

E. Owner or Engineer may issue clarifications and interpretations of the Contract Documents as provided herein.

SC-3.02.A.2 Amend the language of the first sentence in Paragraph 3.02.A.2 to read as follows:

No provision of any such standard specification, manual, reference standard, or code, and no instruction of a Supplier, will be effective to change the duties or responsibilities of Owner, Contractor, or Engineer from those set forth in the part of the Contract Documents prepared by or for Owner.

SC-3.03.A.1 Amend the language of the second sentence in Paragraph 3.03.A.1 to read as follows:

Contractor shall promptly report in writing to Owner ~~Engineer~~ any conflict, error, ambiguity, or discrepancy that Contractor discovers, or has actual knowledge of, and shall not proceed with any Work affected thereby until the conflict, error, ambiguity, or discrepancy is resolved by a clarification or interpretation by Owner or Engineer, or by an amendment or supplement to the Contract issued pursuant to Paragraph 11.01.

SC-3.04.A Add the following sentence immediately after the last sentence in Paragraph 3.04.A.

Owner may choose to request the interpretation of the Design Engineer or another Engineer, at Owner's sole discretion.

**ARTICLE 4—COMMENCEMENT AND PROGRESS OF THE WORK**

4.05 *Delays in Contractor's Progress*

SC-4.05.C.1 Amend Paragraph 4.05.C.1 to include hurricanes.


**Copyright© 2018 National Society of Professional Engineers, American Council of Engineering Companies, and American Society of Civil Engineers. All rights reserved.**

SC-4.05.C.2 Add the following sentence to the end of Item 4.05.C.2

Abnormal weather conditions shall apply to excessive rainfall that exceeds the historical three (3) year average for the specific month in which Contractor claims the weather delays interrupted the critical path towards completing the Work. Rainfall measurements shall be as reported by the Owner's weather station, located at the Owner's water treatment plant, or a South Florida Water Management District (SFWMD) weather station located near the Site. Actual rainfall that exceeds the historical three year average for the specified month will justify an abnormal weather condition for which Contractor may request a change in Contract Time.

**ARTICLE 5—SITE, SUBSURFACE AND PHYSICAL CONDITIONS, HAZARDOUS ENVIRONMENTAL CONDITIONS**

5.03 *Subsurface and Physical Conditions*

SC-5.03 Add the following new paragraphs immediately after Paragraph 5.03.D:

E. The following table lists the reports of explorations and tests of subsurface conditions at or adjacent to the Site that contain Technical Data, and specifically identifies the Technical Data in the report upon which Contractor may rely:

| Report Title | Date of Report | Technical Data |
|---|---|---|
| None for this project | | |
| | | |
| | | |

F. The following table lists the drawings of existing physical conditions at or adjacent to the Site, including those drawings depicting existing surface or subsurface structures at or adjacent to the Site (except Underground Facilities), that contain Technical Data, and specifically identifies the Technical Data upon which Contractor may rely:

| Drawings Title | Date of Drawings | Technical Data |
|---|---|---|
| None for this project | | |
| | | |
| | | |

G. Contractor may examine copies of reports and drawings identified in SC-5.03.E and SC-5.03.F that were not included with the Bidding Documents at **the Jupiter Water Treatment Plant located at 17403 Central Boulevard, Jupiter, FL 33458** during regular business hours, or may request copies from Owner.


**Copyright© 2018 National Society of Professional Engineers, American Council of Engineering Companies, and American Society of Civil Engineers. All rights reserved.**

5.06 *Hazardous Environmental Conditions*

SC-5.06 Add the following new paragraphs immediately after Paragraph 5.06.A.3:

4. The following table lists the reports known to Owner relating to Hazardous Environmental Conditions at or adjacent to the Site, and the Technical Data (if any) upon which Contractor may rely:

| Report Title | Date of Report | Technical Data |
|---|---|---|
| None for this project | | |
| | | |
| | | |

5. The following table lists the drawings known to Owner relating to Hazardous Environmental Conditions at or adjacent to the Site, and Technical Data (if any) contained in such Drawings upon which Contractor may rely:

| Drawings Title | Date of Drawings | Technical Data |
|---|---|---|
| None for this project | | |
| | | |
| | | |

**ARTICLE 6—BONDS AND INSURANCE**

6.01 *Performance, Payment, and Other Bonds*

SC-6.01 Add the following paragraphs immediately after Paragraph 6.01.A:

1. *Required Performance Bond Form:* Shall be in the Form provided in the Front Ends of the Contract Documents.

2. *Required Payment Bond Form:* Shall be in the Form provided in the Front Ends of the Contract Documents.

SC-6.01 Supplement Paragraph 6.01 with the following provisions after Paragraph 6.01.C:

1. *Required Performance Bond Form:* Shall be written by a surety with no less than an "A" rating by a national rating agency. All sureties must be on the U.S. Department of Treasury's listing of Approved Sureties and bonds must be written within the treasury's underwriting limitation.

2. *Required Payment Bond Form:* Shall be written by a surety with no less than an "A" rating by a national rating agency. All sureties must be on the U.S. Department of Treasury's listing of Approved Sureties and bonds must be written within the treasury's underwriting limitation.

6.02 *Insurance – General Provisions*

SC-6.02 Add the following language to the end of the last sentence in Paragraph 6.02.B:

"and Financial Stability: B+ to A+."


**Copyright© 2018 National Society of Professional Engineers, American Council of Engineering Companies, and American Society of Civil Engineers. All rights reserved.**

6.03 *Contractor's Insurance*

SC-6.03 Supplement Paragraph 6.03 with the following provisions after Paragraph 6.03.C:

D. *Other Additional Insureds:* As a supplement to the provisions of Paragraph 6.03.C of the General Conditions, the commercial general liability, automobile liability, umbrella or excess, pollution liability, and unmanned aerial vehicle liability policies must include as additional insureds Owner, Engineer, and other entities as follows:

The following language shall appear on the Certificate of Insurance:

"The Town of Jupiter, Florida it's employees, agents, contractors, is hereby named Additional Insured under the terms of this policy and shall be provided any Notice of Cancellation of any of the required policies." The Certificate of Insurance shall be issued to Town of Jupiter, Attn: Amanda Z. Barnes, P.E., 17403 Central Boulevard, Jupiter, FL 33458.

A thirty (30) day Notice of Cancellation is required and must be stated on the Certificate of Insurance.

Certificates of Insurance (COI) shall be maintained current for the duration of the Contract. Contractor is responsible to provide Owner with updated COIs during the course of the Contract.

E. *Workers' Compensation and Employer's Liability:* Contractor shall purchase and maintain workers' compensation and employer's liability insurance. F. *Commercial General Liability—Claims Covered:* Contractor shall purchase and maintain commercial general liability insurance, covering all operations by or on behalf of Contractor, on an occurrence basis, against claims for:

1. damages because of bodily injury, sickness or disease, or death of any person other than Contractor's employees,
2. damages insured by reasonably available personal injury liability coverage, and
3. damages because of injury to or destruction of tangible property wherever located, including loss of use resulting therefrom.

G. *Commercial General Liability—Form and Content:* Contractor's commercial liability policy must be written on a 1996 (or later) Insurance Services Organization, Inc. (ISO) commercial general liability form (occurrence form) and include the following coverages and endorsements:

1. Products and completed operations coverage.
    a. Such insurance must be maintained for three years after final payment.
    b. Contractor shall furnish Owner and each other additional insured (as identified in the Supplementary Conditions or elsewhere in the Contract) evidence of continuation of such insurance at final payment and three years thereafter.
2. Blanket contractual liability coverage, including but not limited to coverage of Contractor's contractual indemnity obligations in Paragraph 7.18.
3. Severability of interests and no insured-versus-insured or cross-liability exclusions.
4. Underground, explosion, and collapse coverage.


**Copyright© 2018 National Society of Professional Engineers, American Council of Engineering Companies, and American Society of Civil Engineers. All rights reserved.**

5. Personal injury coverage, with employment exclusion deleted.

6. Additional insured endorsements that include both ongoing operations and products and completed operations coverage through ISO Endorsements CG 20 10 10 01 and CG 20 37 10 01 (together). If Contractor demonstrates to Owner that the specified ISO endorsements are not commercially available, then Contractor may satisfy this requirement by providing equivalent endorsements.

7. For design professional additional insureds, ISO Endorsement CG 20 32 07 04 "Additional Insured—Engineers, Architects or Surveyors Not Engaged by the Named Insured" or its equivalent.

H. *Commercial General Liability—Excluded Content:* The commercial general liability insurance policy, including its coverages, endorsements, and incorporated provisions, must not include any of the following:

1. Any modification of the standard definition of "insured contract" (except to delete the railroad protective liability exclusion if Contractor is required to indemnify a railroad or others with respect to Work within 50 feet of railroad property).

2. Any exclusion for water intrusion or water damage.

3. Any provisions resulting in the erosion of insurance limits by defense costs other than those already incorporated in ISO form CG 00 01.

4. Any exclusion of coverage relating to earth subsidence or movement.

5. Any exclusion for the insured's vicarious liability, strict liability, or statutory liability (other than worker's compensation).

6. Any limitation or exclusion based on the nature of Contractor's work.

7. Any professional liability exclusion broader in effect than the most recent edition of ISO form CG 22 79.

I. *Commercial General Liability—Minimum Policy Limits*

| **Commercial General Liability** | **Policy limits of not less than:** |
|---|---|
| General Aggregate | $1,000,000 |
| Products—Completed Operations Aggregate | $1,000,000 |
| Personal and Advertising Injury | $1,000,000 |
| Bodily Injury and Property Damage—Each Occurrence | $1,000,000 |

J. *Automobile Liability:* Contractor shall purchase and maintain automobile liability insurance for damages because of bodily injury or death of any person or property damage arising out of the ownership, maintenance, or use of any motor vehicle. The automobile liability policy must be written on an occurrence basis.

| **Automobile Liability** | **Policy limits of not less than:** |
|---|---|
| **Bodily Injury** | |
| Each Person | $1,000,000 |
| Each Accident | $1,000,000 |


**Copyright© 2018 National Society of Professional Engineers, American Council of Engineering Companies, and American Society of Civil Engineers. All rights reserved.**

| Automobile Liability | Policy limits of not less than: |
|---|---|
| **Property Damage** | |
| Each Accident | $1,000,000 |
| **[or]** | |
| **Combined Single Limit** | |
| Combined Single Limit (Bodily Injury and Property Damage) | $N/A |

K. *Contractor's Pollution Liability Insurance:* Contractor shall purchase and maintain a policy covering third-party injury and property damage, including cleanup costs, as a result of pollution conditions arising from Contractor's operations and completed operations. This insurance must be maintained for no less than three years after final completion.

| Contractor's Pollution Liability | Policy limits of not less than: |
|---|---|
| Each Occurrence/Claim | $1,000,000 |
| General Aggregate | $1,000,000 |

SC-6.04. Add the following sentence immediately before Paragraph 6.0.A

If there is a Bid Item of Pay Item in the Bid Schedule of Values for Builder's Risk Insurance, then Contractor shall provide Builder's Risk Insurance as required by Article 6.04 of the General Conditions. If a Bid Item or Pay Item is not provided for in the Bid Schedule of Values (or addenda during Bidding) then Contractor is not required to provide Builder's Risk Insurance for this Contract.

SC-6.04 Supplement Paragraph 6.04 of the General Conditions with the following provisions:

F. *Builder's Risk Requirements:* The builder's risk insurance must:

1. be written on a builder's risk "all risk" policy form that at a minimum includes insurance for physical loss or damage to the Work, temporary buildings, falsework, and materials and equipment stored and in transit, and must not exclude the coverage of the following risks: fire; windstorm; hail; flood; earthquake, volcanic activity, and other earth movement; lightning; riot; civil commotion; terrorism; vehicle impact; aircraft; smoke; theft; vandalism and malicious mischief; mechanical breakdown, boiler explosion, and artificially generated electric current; collapse; explosion; debris removal; demolition occasioned by enforcement of Laws and Regulations; and water damage (other than that caused by flood).

    a. Such policy will include an exception that results in coverage for ensuing losses from physical damage or loss with respect to any defective workmanship, methods, design, or materials exclusions.

    b. If insurance against mechanical breakdown, boiler explosion, and artificially generated electric current; earthquake, volcanic activity, and other earth


**Copyright© 2018 National Society of Professional Engineers, American Council of Engineering Companies, and American Society of Civil Engineers. All rights reserved.**

movement; or flood, are not commercially available under builder's risk policies, by endorsement or otherwise, such insurance will be provided through other insurance policies acceptable to Owner and Contractor.

2. cover, as insured property, at least the following: (a) the Work and all materials, supplies, machinery, apparatus, equipment, fixtures, and other property of a similar nature that are to be incorporated into or used in the preparation, fabrication, construction, erection, or completion of the Work, including Owner-furnished or assigned property; (b) spare parts inventory required within the scope of the Contract; and (c) temporary works which are not intended to form part of the permanent constructed Work but which are intended to provide working access to the Site, or to the Work under construction, or which are intended to provide temporary support for the Work under construction, including scaffolding, form work, fences, shoring, falsework, and temporary structures.
3. cover expenses incurred in the repair or replacement of any insured property (including but not limited to fees and charges of contractors, engineers, and architects).
4. extend to cover damage or loss to insured property while in temporary storage at the Site or in a storage location outside the Site (but not including property stored at the premises of a manufacturer or Supplier).
5. extend to cover damage or loss to insured property while in transit.
6. allow for the waiver of the insurer's subrogation rights, as set forth in this Contract.
7. allow for partial occupancy or use by Owner by endorsement, and without cancellation or lapse of coverage.
8. include performance/hot testing and start-up, if applicable.
9. be maintained in effect until the Work is complete, as set forth in Paragraph 15.06.D of the General Conditions, or until written confirmation of Owner's procurement of property insurance following Substantial Completion, whichever occurs first.
10. include as named insureds the Owner, Contractor, Subcontractors (of every tier), and any other individuals or entities required by this Contract to be insured under such builder's risk policy. For purposes of Paragraphs 6.04, 6.05, and 6.06 of the General Conditions, and this and all other corresponding Supplementary Conditions, the parties required to be insured will be referred to collectively as "insureds." In addition to Owner, Contractor, and Subcontractors of every tier, include as insureds the following:

    a. No others for this Contract**.**

11. include, in addition to the Contract Price amount, the value of the following equipment and materials to be installed by the Contractor but furnished by the Owner or third parties:

    a. None for this Contract.

SC-6.04 Supplement Paragraph 6.04 of the General Conditions with the following provisions:

H. *Builder's Risk and Other Property Insurance Deductibles:* The purchaser of any required builder's risk, installation floater, or other property insurance will be responsible for costs not covered because of the application of a policy deductible.


**Copyright© 2018 National Society of Professional Engineers, American Council of Engineering Companies, and American Society of Civil Engineers. All rights reserved.**

**ARTICLE 7—CONTRACTOR'S RESPONSIBILITIES**

7.03 *Labor; Working Hours*

SC-7.03.C Amend the first and second sentences of Paragraph 7.03.C to state "…all Work at the Site must be performed during regular working hours, Monday through Friday. Contractor will not perform Work on a Saturday, Sunday, or any legal holiday."

SC-7.03.C Delete the third sentence in its entirety and insert the following sentences in its place.

Contractor may request in writing, to Owner, to perform Work outside of regular working hours. Owner is not obligated to consent to Work occurring outside of regular working hours, if it is not in Owner's best interest.

SC-7.03.C Add the following new subparagraphs immediately after Paragraph 7.03.C:

1. Regular working hours will be Monday through Friday, 7:00am – 5:00pm. Work requiring inspection shall be scheduled to occur Monday through Friday, between the hours of 8:00am – 3:30 pm.

2. Owner's legal holidays for the year 2020 are as follows:

| | |
|---|---|
| Wednesday, Jan. 1, 2020 | New Year's Day |
| Monday, Jan. 20, 2020 | Martin Luther King Jr. Day |
| Monday, Feb. 17, 2020 | President's Day |
| Monday, May 25, 2020 | Memorial Day |
| Friday, July 3, 2020 | Independence Day (Observed) |
| Saturday, July 4, 2020 | Independence Day |
| Monday, Sept. 7, 2020 | Labor Day |
| Wednesday, Nov. 11, 2020 | Veteran's Day |
| Thursday, Nov. 26, 2020 | Thanksgiving Day |
| Friday, Nov. 27, 2020 | Thanksgiving holiday |
| Thursday, Dec. 24, 2020 | Christmas Eve Day |
| Friday, Dec. 25, 2020 | Christmas Day |

If the Contract Work is anticipated to go beyond 2020, Contractor shall anticipate observance of the same holidays (not the same dates) for future years.

SC-7.03.D Add the following new paragraph immediately after Paragraph 7.03.C:

D. Contractor shall be responsible for the cost of any overtime pay or other expense incurred by the Owner for Engineering services (including those of the Resident Project Representative, and geotechnical testing if any), Owner's representative, and construction observation services, occasioned by the performance of Work on Saturday, Sunday, any legal holiday, or as overtime on any regular work day. Contractor shall execute a deductive change order with Owner to reduce the Contract Value by the cost of the expenses incurred by Owner for overtime pay and Work outside of regular work hours. If Contractor does not sign such change order, or if the parties are unable to agree as to the amount owed, then Owner may impose a reasonable set-off against payments due under Article 15.

7.10 *Taxes*


**Copyright© 2018 National Society of Professional Engineers, American Council of Engineering Companies, and American Society of Civil Engineers. All rights reserved.**

SC-7.10.B Add a new paragraph immediately after Paragraph 7.10.A:

B. Owner is exempt from payment of sales and compensating use taxes of the State of Florida and of cities and counties thereof on all materials to be incorporated into the Work. Owner may exercise its rights to purchase materials to be incorporated into the Work of this Contract under the provisions governing the State of Florida's Sales and Use Tax Exemption for Owner furnished materials as follows:

1. Sales and Use Taxes. Owner is exempt from paying sales and use taxes on materials and equipment purchased for, and incorporated into this Public Works Contract (hereinafter the "Project") in accordance with Florida Statute 12A-1.094. The Owner shall make direct purchases of all materials and equipment purchased for, or to be incorporated into the Project, as agreed upon between the Contractor and the Owner. All direct purchases of materials and equipment shall be made by the Owner with funds specifically allocated for construction of the Project. Contractor shall provide Owner with a proposed deductive change order no later than 10 calendar days after request by Owner for materials and equipment to be purchased by the Owner for the Project. The proposed deductive change order shall include the costs of the materials to be purchased by the Owner including sales tax. The Town of Jupiter Purchase Order Standard Terms and Conditions, Certificate of Entitlement and Construction Contract Documents (plans and specifications) and requirements shall apply to work performed under this program. Each vendor/supplier of equipment under this Sales Tax Recovery Program shall be obligated to meet the requirements of the Town of Jupiter Construction Contract Documents and State Law (F.S. 12A-1.094).

2. The Contractor shall: (a) compile Contractor's and any Subcontractors' itemized requirement for materials and equipment, including quantities, unit costs, manufacturers' or vendors' catalogue or order numbers, delivery instructions, and other specific information that is required to order the specific materials and equipment, and terms and conditions to be imposed on suppliers regarding delivery and submittal time requirements, and quantities thereof required by Contractor or Subcontractors in accordance with the applicable requirements of the Construction Contract, from time to time, during the construction of the Project, as materials and equipment need to be ordered for the Project, and submit such compilation to the Owner's designated representative: (b) prepare a requisition for such materials and equipment and (c) deliver any such requisition to the owner's designated representative no less than thirty (30) days prior to the date the manufacturer or vendor of the materials or equipment, as the case may be, requires orders for such materials or equipment to be placed to assure delivery of such materials or equipment to the Site in accordance with the Project Schedule (the "Order Date"). The requisitions shall identify the Order Date. Upon receipt of any such requisition the Owner's designated representative shall forward same to the Owner. The Owner shall issue a Purchase Order directly to the vendor of the materials or equipment, prior to the Owner Date (a Purchase Owner). The Owner shall include with any such Purchase Order, a copy of the owner's sales and use tax exemption certificate, a Certificate of Entitlement and the order requisition prepared by the Contractor. The Owner shall also provide the Contractor with a Certificate of Entitlement for each vendor from which materials or equipment is purchased under this program. The


**Copyright© 2018 National Society of Professional Engineers, American Council of Engineering Companies, and American Society of Civil Engineers. All rights reserved.**

vendor shall issue the invoice directly to the Owner. The owner shall make direct payment to the vendor.

3. The Contractor, upon the delivery of any such materials or equipment, shall verify the conformity of such materials or equipment with the terms of the Purchase Order and the Contract Documents. If the Contractor determines that the materials and equipment are conforming, the Owner shall take title and possession of such material and equipment before such materials and equipment are incorporated into the Project. If the Contractor determines that the materials and equipment are non-conforming, the Contractor shall immediately notify the Owner in writing and the Owner shall reject such material and equipment.

4. The Owner shall assume all risk of loss on all materials and equipment purchased pursuant to its sales and use tax exemption.

5. To the extent that materials and equipment are purchased pursuant to the Owner's sales and use tax exemption, the Contractor shall reduce the Contractor Amount and the penal sum of its public construction bond by 1.06, or the applicable sales and use tax at the time, times the cost of the materials and equipment purchased directly by the Owner.

6. The Contractor shall be fully responsible for all matters relating to the receipt of materials and equipment furnished by the Owner in accordance with this Special Condition, including, but not limited to, the responsibility for verifying correct quantities, verifying documents or orders in a timely manner, coordinating purchases, providing and obtaining all warranties and guarantees required by the Contract Documents, inspection and acceptance of the materials and equipment at the time of delivery, and loss or damage to materials and equipment following acceptance of items due to the negligence of such Contractor or any Subcontractors. The Contractor shall coordinate delivery schedules, sequence of delivery, loading orientation, and other arrangements normally required by such Contractor for the particular materials furnished. The Contractor shall provide or arrange for all services required for the unloading, handling and storage of such materials and equipment through installation.

7. The Contractor shall visually inspect all shipments from material and equipment vendors purchased directly by the Owner in accordance with this Special Condition (the "Owner Furnished Materials") and approve the vendors' invoices for materials or equipment delivered, as Owner-Furnished Materials are furnished to the Site in accordance with this Special Condition. The Contractor shall assure that each delivery of Owner Furnished Materials is accomplished by documentation adequate to identify the Purchase Order against which the purchase is made. This documentation may consist of a delivery ticket and an invoice from the vendor conforming to the Purchase Order, together with such additional information as the Owner may require. The Contractor shall deliver to the Owner's designated representative all invoices for materials and equipment upon verification by such Contractor that the materials and equipment conform exactly to the Contract Documents and the Purchase Order. Upon receipt of any invoice for Owner Furnished Materials, the Owner's designated representative shall deliver such invoice to the Owner for payment directly to the Vendor.


**Copyright© 2018 National Society of Professional Engineers, American Council of Engineering Companies, and American Society of Civil Engineers. All rights reserved.**

8. The Contractor shall inspect all Owner Furnished Materials to determine that such Owner Furnished Materials conform to the Contract Documents, including the Drawings and the Specifications, and to determine prior to incorporation into the work whether such Owner Furnished Materials are patently defective, and whether such Owner Furnished Materials are identical to the materials ordered and match the description of the bill of lading and the Purchase Order. If Contractor discovers defective or non-conforming Owner Furnished Materials upon such visual inspection, Contractor shall: (a) not recommend acceptance of such non-conforming materials and equipment, (b) not utilize such non-conforming or defective materials in the work: (c) not allow Subcontractor to utilize such non-conforming or defective materials in the work; and (d) promptly notify the Owner's designated representative, in writing, of the defective or non-conforming condition so that repair or replacement of those Owner Furnished Materials can occur without any undue delay or interruption to the Project. In the event that such Contractor fails to perform such inspection or otherwise incorporates into the work such defective or non-conforming materials, the Contractor shall be responsible for the repair and replacement of defective or non-conforming materials, at its sole cost and expense.

9. The Contractor shall maintain records of all Owner Furnished Materials incorporated into the work from the stock of Owner Furnished Materials. The Contractor shall account monthly to the Owner's designated representative and Owner for any Owner Furnished Materials delivered to the site, indicating which Owner Furnished Materials have been incorporated into the work.

10. The Contractor shall be responsible for obtaining and managing all warranties and guarantees for all Owner Furnished Materials. All repair, maintenance or damage-repair calls shall be forwarded by the Owner to the Contractor for resolution with the appropriate vendor or Subcontractor through the warranty period.

11. After the Owner takes possession of the Owner Furnished Materials at the site, possession of the Owner shall immediately and automatically transfer to the Contractor without notice. The transfer of possession of Owner Furnished Materials from the Owner to the Contractor shall constitute a bailment for the mutual benefit of the Owner and such Contractor. The Owner shall be considered the bailor and the Contractor the bailee of the Owner Furnished materials. Owner Furnished Materials shall be considered returned to the Owner for purposes of their bailment at such time as they are incorporated into the Project or consumed in the process of completing the Project.

12. The Contractor shall purchase and maintain builder's risk insurance, naming the Owner as an additional insured, sufficient to protect against loss of or damage to Owner Furnished Materials. Such insurance shall be in the amount stated elsewhere in the Contract and shall cover the full value of any Owner Furnished Materials between the time the Owner first takes title to and possession of any of such Owner Furnished Materials until final completion of the work."

13. The Owner shall not be liable for any interruption or delay damages in the project by virtue of ordering the Owner Furnished Materials, for any defects or other problems with the project by virtue of ordering the Owner Furnished Materials, or for any extra


**Copyright© 2018 National Society of Professional Engineers, American Council of Engineering Companies, and American Society of Civil Engineers. All rights reserved.**

costs resulting from any delay in the delivery of, or defects in, the Owner Furnished Materials.

14. The Contractor, on a monthly basis, shall review invoices submitted by all vendors of Owner Furnished Materials delivered to the site during the prior month and either concur or object to the Owner's Issuance of payment to the vendors, based upon such Contractor's records of materials delivered to the site and whether any of the Owner Furnished Materials for which payment has not been made were either non-conforming or defective.

15. In order to arrange for the prompt payment to the vendor, the Contractor shall provide to the Owner's designated representative a list of the acceptance of the goods or materials within fifteen (15) days of receipt of said goods or materials. Accompanying the list shall be a copy of the applicable purchase order, invoices, delivery tickets, written acceptance of the delivered items, and such other documentation as may be reasonably required by the Owner. Upon receipt of the appropriate documentation, the Owner shall process vendor's invoice for payment directly to vendor by electronic funds transfer (EFT) based upon the receipt of data provided. The Contractor shall assist the Owner to immediately obtain partial or final release of waivers as appropriate. The Owner shall not make any payment without the appropriate Contractor's concurrence and approval. Owner shall hold up to 5% retention on Owner Furnished Materials against the Vendor, for equipment requiring operational and start-up testing, if a specific pay item is not identified for such start-up and testing. Owner shall release retention upon successful start-up and operational testing of the equipment as agreed to between the Owner, Contractor and Vendor. Owner may, at Owner's discretion, hold up to 2% retention until vendor record drawings and operation and maintenance manuals are accepted by the Contractor and Owner.

16. The Contractor may, in its reasonable discretion, require certain material and equipment vendors to provide a supply bond in the amount of one-hundred percent (100%) of the purchase order price. The supply bond, if required, shall be issued by a qualified surety company authorized to do business in the State of Florida and acceptable to the Owner. If the supply bond is required, the costs thereof will be added to the amount of the purchase order. The Contractor shall verify that a vendor can furnish a supply bond. All bonds will name the Owner and the Contractor as additional obliges. To the extent that materials and equipment are purchased pursuant to the Owner's sales and use tax exemption, the Contractor shall reduce the Contract Amount and the penal sum of its public construction bond by 1.06, or the applicable sales and use tax at the time, times the cost of the materials and equipment purchased directly by the Owner.

17. The Contractor is advised that the following list of equipment may be included under the sales and use tax exemption program for Owner furnished equipment. This list is provided to the Contractor for informational purposes only. The Owner reserves the right to revise the quantity of Owner furnished equipment by deleting equipment listed or including equipment not listed herein. Contractor may make suggestions to Owner as to other components of the project that may be Owner purchased under this program for this project.


**Copyright© 2018 National Society of Professional Engineers, American Council of Engineering Companies, and American Society of Civil Engineers. All rights reserved.**

- Well pump and motor

Purchase Order Standard Terms and Conditions and a Certificate of Entitlement are provided as Exhibit A in at the end of these Supplemental Conditions. Both of these documents will be issued to the Vendor for procurement of materials and supplies to be incorporated into this Contract under the Sales and Use Tax Exemption Program. Contractor will also receive copies of the Certificate of Entitlement, and purchase order to vendor with purchase order standard terms and conditions.

**ARTICLE 8—OTHER WORK AT THE SITE**

No changes are made to the General Conditions for this Article.

**ARTICLE 9—OWNER'S RESPONSIBILITIES**

9.13 *Owner's Site Representative*

SC-9.13 Add the following new paragraph immediately after Paragraph 9.12 of the General Conditions:

9.13 *Owner's Administration of Contract and Site Representative*

A. Owner will administer the Contract during construction. Owner will furnish an Engineer to manage the Contract and certify construction completion for close out of regulatory permits. Owner's Engineer is an employee of the Owner, not an Engineering consultant, or agent. Owner may at Owner's discretion refer to the Design Engineer for interpretation, input, and review of components during administration of the Contract.

B. Owner will furnish the "Owner's Site Representative" to represent Owner at the Site and assist Owner in observing the progress and quality of the Work. The Owner's Site Representative will be an employee of Owner. Owner may at Owner's discretion request from Design Engineer assistance with furnishing a Site Representative to assist with construction observation and inspection.

**ARTICLE 10—ENGINEER'S STATUS DURING CONSTRUCTION**

10.03 *Resident Project Representative*

SC10.01.A.1 Add the following new subparagraph immediately after Paragraph 10.01.A:

1. On this Project, by agreement with the Owner, the Design Engineer will not serve as the Engineer during construction. Owner will furnish a project manager who will serve as the Engineer during construction. Owner's Engineer will have all authority as described in Article 10.04 of the General Conditions. Owner's Engineer may request assistance from the Design Engineer with items such as shop drawing reviews, interpretations and clarifications during construction, and to provide other input as requested by Owner at Owner's discretion.

SC-10.03.A Add the following new subparagraph immediately after Paragraph 10.03.A:

1. On this Project, by agreement with the Owner, the Engineer will not furnish a Resident Project Representative to represent Engineer at the Site or assist Engineer in observing the progress and quality of the Work. Owner will furnish the Resident Project Representative for this project.


**Copyright© 2018 National Society of Professional Engineers, American Council of Engineering Companies, and American Society of Civil Engineers. All rights reserved.**

SC-10.03.C Add the following new paragraphs immediately after Paragraph 10.03.B:

C. The Resident Project Representative (RPR) will be Owner's representative at the Site. RPR's dealings in matters pertaining to the Work in general will be with the Owner's Engineer and Contractor. RPR's dealings with Subcontractors will only be through or with the full knowledge or approval of Contractor. The RPR will:

1. *Conferences and Meetings:* Attend meetings with Contractor, such as preconstruction conferences, progress meetings, job conferences, and other Project-related meetings (but not including Contractor's safety meetings), and as appropriate prepare and circulate copies of minutes thereof.

2. *Safety Compliance:* Comply with Site safety programs, as they apply to RPR, and if required to do so by such safety programs, receive safety training specifically related to RPR's own personal safety while at the Site.

3. *Liaison*

    a. Serve as Owner's liaison with Contractor. Working principally through Contractor's authorized representative or designee; assist in providing information regarding the provisions and intent of the Contract Documents.

    b. Serve as Owner's liaison with Contractor when Contractor's operations affect Owner's on-Site operations.

    c. Assist in obtaining from Owner additional details or information, when required for Contractor's proper execution of the Work.

4. *Review of Work; Defective Work*

    a. Conduct on-Site observations of the Work to assist Owner's Engineer in determining, to the extent set forth in Paragraph 10.02, if the Work is in general proceeding in accordance with the Contract Documents.

    b. Observe whether any Work in place appears to be defective.

    c. Observe whether any Work in place should be uncovered for observation, or requires special testing, inspection or approval.

5. *Inspections and Tests*

    a. Observe Contractor-arranged inspections required by Laws and Regulations, including but not limited to those performed by public or other agencies having jurisdiction over the Work.

    b. Accompany visiting inspectors representing public or other agencies having jurisdiction over the Work.

6. *Payment Requests:* Review Applications for Payment with Contractor.

7. *Completion*

    a. Participate in Owner Engineer's visits regarding Substantial Completion.

    b. Assist in the preparation of a punch list of items to be completed or corrected.


**Copyright© 2018 National Society of Professional Engineers, American Council of Engineering Companies, and American Society of Civil Engineers. All rights reserved.**

c. Participate in Owner Engineer's visit to the Site in the company of Contractor regarding completion of the Work, and prepare a final punch list of items to be completed or corrected by Contractor.

d. Observe whether items on the final punch list have been completed or corrected.

D. The RPR will not:

1. Authorize any deviation from the Contract Documents or substitution of materials or equipment (including "or-equal" items).

2. Exceed limitations of Engineer's authority as set forth in the Contract Documents.

3. Undertake any of the responsibilities of Contractor, Subcontractors, or Suppliers.

4. Advise on, issue directions relative to, or assume control over any aspect of the means, methods, techniques, sequences or procedures of construction.

5 Advise on, issue directions regarding, or assume control over security or safety practices, precautions, and programs in connection with the activities or operations of Owner or Contractor.

6. Participate in specialized field or laboratory tests or inspections conducted off-site by others except as specifically authorized by Owner's Engineer.

7. Authorize Owner to occupy the Project in whole or in part.

**ARTICLE 11—CHANGES TO THE CONTRACT**

No changes are made to the General Conditions for this Article.

**ARTICLE 12—CLAIMS**

No changes are made to the General Conditions for this Article.

**ARTICLE 13—COST OF WORK; ALLOWANCES, UNIT PRICE WORK**

13.01 *Cost of the Work*

SC-13.01 Supplement Paragraph 13.01.B.5.c.(2) by adding the following sentence:

The equipment rental rate book that governs the included costs for the rental of machinery and equipment owned by Contractor (or a related entity) under the Cost of the Work provisions of this Contract is the most current edition of Rental Rate Blue Book for Construction Equipment.

SC-13.01 Supplement Paragraph 13.01.C.2 by adding the following definition of small tools and hand tools:

a. For purposes of this paragraph, "small tools and hand tools" means any tool or equipment whose current price if it were purchased new at retail would be less than $500.


**Copyright© 2018 National Society of Professional Engineers, American Council of Engineering Companies, and American Society of Civil Engineers. All rights reserved.**

13.03 *Unit Price Work*

SC-13.03 Delete Paragraph 13.03.E in its entirety and insert the following in its place:

**ARTICLE 1—E. *Adjustments in Unit Price***

1. Unit prices shall remain firm for the duration of the Contract. No changes in unit price shall be permitted.

**ARTICLE 2—TESTS AND INSPECTIONS; CORRECTION, REMOVAL, OR ACCEPTANCE OF DEFECTIVE WORK**

14.05.B Delete Paragraph 14.05.B in its entirety and insert the following in its place:

B. If any Work is covered contrary to the written request of Engineer, or requirements of the Contract Documents, including Drawings and Specifications, then Contractor shall, if requested by Engineer, uncover such Work for Engineer's observation, and then replace the covering, all at the Contractor's expense.

**ARTICLE 3—PAYMENTS TO CONTRACTOR, SET OFFS; COMPLETIONS; CORRECTION PERIOD**

15.01 *Progress Payments*

SC-15.01 Add the following sentences immediately before Paragraph 15.01 as follows:

All references to the term Engineer in Article 15 shall refer to Owner's Engineer, who is administering the Contract, serving as Owner's project manager, and serving as Engineer during construction.

SC-15.01.C.1 Amend the language of Paragraph 15.01.C.1 to read as follows:

1. Owner will, within 14 days, after receipt of each Application for Payment from Contractor, including each resubmittal, either indicate in writing to Contractor that Owner agrees with the recommendation for payment and payment will be made, or return the Application to Contractor indicating in writing the reasons for Owner's refusal to recommend payment. In the latter case, Contractor shall make the necessary corrections and resubmit the Application.

SC-15.01.D.1 Amend the language of Paragraph 15.01.D.1 to read as follows:

1. Thirty (30) days after presentation of the Application for Payment to Owner with Engineer's recommendation, the amount recommended (subject to any Owner set offs) will become due, and when due will be paid by Owner to Contractor.

15.03 *Substantial Completion*

SC-15.03 Add the following new subparagraph to Paragraph 15.03.B:

1. If some or all of the Work has been determined not to be at a point of Substantial Completion and will require re-inspection or re-testing by Engineer, the cost of such re-inspection or re-testing, including the cost of time, travel and living expenses, will be paid by Contractor to Owner. If Contractor does not pay, or the parties are unable to agree as to the amount owed, then Owner may impose a reasonable set-off against payments due under this Article 15.


**Copyright© 2018 National Society of Professional Engineers, American Council of Engineering Companies, and American Society of Civil Engineers. All rights reserved.**

**ARTICLE 4—SUSPENSION OF WORK AND TERMINATION**

No changes are made to the General Conditions for this Article.

**ARTICLE 5—FINAL RESOLUTIONS OF DISPUTES**

No changes are made to the General Conditions for this Article.

**ARTICLE 6—MISCELLANEOUS**

No changes are made to the General Conditions for this Article.


**Copyright© 2018 National Society of Professional Engineers, American Council of Engineering Companies, and American Society of Civil Engineers. All rights reserved.**

## PURCHASE ORDER STANDARD TERMS AND CONDITIONS

## FOR

## TOWN OF JUPITER UTILITIES

1) Purchase Order number must show on all invoices, shipments, correspondence, and any other documents related to the purchase order.

2) Invoices shall be submitted in triplicate. If a partial shipment is made, so state this on the invoice. Also state whether the invoice is final or complete.

3) This purchase order is subject to the approval of 6 copies of submitted data prior to fabrication and shipment.

4) Vendor's final invoice will not be honored until receipt of 3 final copies of operation and maintenance instructions, the Contract Documents, spare parts lists, and record drawings, if applicable.

5) All material and equipment furnished hereunder shall be in strict compliance with plans, specifications, and general conditions of the Contract between _____ (Contractor) and (Purchaser) the Town of Jupiter Utilities (Owner) entitled "_____" (name of contractor) and / or with any other contractor, in connection with the job for which these items are furnished, and vendor shall be bound thereby in the performance of this contract. Vendor expressly warrants that all material and equipment covered by this purchase order shall produce capacities or meet design specifications and function as called for in the applicable plans and specifications, or as set forth in the text of this order.

6) All material and equipment contemplated under this order shall be subject to the approval of the Purchaser and the Owner, and / or his Architects, Engineers, or other parties designated by the Owner. All materials and equipment, actually furnished under this order, shall be subject to Purchaser's inspection and testing to determine compliance with the requirements of this order. Vendor shall furnish the indicated number of submittal data or samples for said approval.

7) Owner shall issue to Vendor and Contractor with this purchase order a completed and signed Certificate of Entitlement. A copy of Owner's Florida Consumer's Certificate of Exemption shall accompany the purchase order issued directly to the Vendor.

8) Vendor guarantees against defects in material or workmanship all items covered by this purchase order and will repair or replace, freight prepaid to jobsite without cost to purchaser or Owner, any part found to be defective in material or workmanship within that time provided by the Contract Documents as indicated, or one year from date of initial operation or 18 months from date of shipment, whichever is longer. On any part found to be defective at jobsite prior to initial startup seller shall make repairs or replacement with his own forces, or reimburse Contractor for necessary labor. Defective parts will be returned freight collect only upon written request and instructions from the vendor. In the event more than one person or entity is listed on the front side of this purchase order as Vendor or is identified as an agent, that person or entity shall also be fully liable on and responsible for the performance of all of the Vendor's obligations under this purchase order. Initial Operation shall be when the materials or equipment are placed into service for use by Owner.

9) Notice to Purchaser of all shipments of equipment and / or materials shall be given immediately, noting date, routing, order number, description, and copy of bill of lading. Ultimate delivery of equipment requiring rigging shall be made by suitable vehicle. Equipment and / or materials in transit shall be adequately protected from the elements. The materials and equipment covered by this order shall remain the property of the Vendor until actually received at the destination by the Purchaser and Owner. Payment for goods damaged in transit, regardless of how shipped, will be withheld until repairs or replacement are made and claim against transportation company is resolved.

10) Cancellation of all or any part of this order to be effected at no cost to Contractor or Owner for failure of the Vendor to:

a) Secure written approval of submittal data by approving authority or purchaser.

b) Furnish any portion of this order within specified time limits.

11) In the event the contract price or prices and terms set forth herein, including any changes that may be made therein, violate an applicable schedule, regulation or order here before or hereafter issued by an approved Government Agency, the contract price or prices shall be the maximum prices permitted by, and the terms shall be in accordance with such schedule, regulations or order. All prices listed on the front side of this order are firm for duration of the project and no escalation will be allowed. Vendor shall not assign this purchase order without the written consent of Purchaser and Owner; except however, Vendor assigns to Purchaser all of Vendor's right and interest in any payments due or to become due to Vendor under this purchase order as security for the payment and satisfaction of any sums due Purchaser or to become due to Purchaser under this or any other purchase order, contract or agreement between Vendor and Purchaser or debt due Purchaser for which Vendor may be liable to Purchaser.

12) The Vendor hereby agrees to indemnify, defend and hold harmless the Purchaser and Owner, and their officers, agents, employees and designees from and against all claims, liability, damages, losses, costs, or expenses whatsoever (including without limitation all attorney's fee, cost and expenses) arising out of or in connection with this Purchase Order and the materials, goods, or services provided by Vendor including without limitation those attributable to bodily injury or death, property damage or destruction, or by reason of any action or alleged infringement or letters patent or any litigation based thereon covering any article purchased hereunder. Such indemnification shall not include claims of, or damages resulting from, gross negligence, or willful, wanton or intentional misconduct of the parties indemnified hereunder. Vendor's indemnification is limited to the extent of insurance coverage maintained by Vendor, or One Million Dollars ($1,000,000), whichever is greater. [NOTE: If this Purchase Order is in connection with a public agency's project, then Vendor's indemnity obligations are limited to the extent caused by the negligence, recklessness, or intentional wrongful misconduct of Vendor and persons employed or utilized by Vendor in the performance of the Purchase Order.]

13) Vendor shall furnish all necessary releases, lien waivers, affidavits, or other documents, all as required by the Contract Documents and / or to keep the Owner's premises free from liens or claims arising out of the furnishing of materials or equipment herein, as payments are made from time to time under this order.

14) Any acceptance in a manner or on terms and conditions different from those contained in this order shall not operate as an acceptance. This order, when accepted by the Vendor, shall constitute a valid and binding contract which shall be governed by and construed according to the laws of the State of Florida. All prior options, conversations, or preliminary negotiations shall be deemed to be merged in this order.

15) The above conditions and conditions printed or typed on front of side of this order, can only be changed by written authorization of the Contractor and the Owner, and are not to be abridged by any terms or conditions of sale printed on Vendor's quotation, acknowledgement, invoice, or other like form.

The terms and conditions contained in this order shall be binding upon Vendor unless it objects in writing within 10 days of receipt this order.

16) All purchases are F.O.B. destination, freight prepaid by Seller unless otherwise stated on the Purchase Order. Collect shipments will not be accepted.

17) Calculations for invoice payment will be calculated from date Town receives the invoice.

18) Title of goods shall pass to Buyer upon acceptance.

19) Seller shall comply with the Fair Labor Standards Act and Equal Employment Opportunity Provisions of Executive Orders.

20) Seller is expressly prohibited from delegating its duties and obligations or transferring or assigning its rights hereunder without the prior written approval of Buyer.

21) If items purchased are classified as toxic or hazardous substances under Chapter 403, Florida Statutes, Seller must submit copies of the Material Safety Data Sheet IMSOSI for each substance to the Town of Jupiter's Risk Management Coordinator, 210 Military Trail, Jupiter, Florida 33458 and to the delivery location at time of shipment. Products must be identified and labeled in accordance with OSHA standards. Failure to comply with these requirements will result in delay of payment until compliance is affected.

22) This purchase Order shall be governed and construed according to the laws of the State of Florida.

23) EXCISE AND SALES TAXES: The prices herein should not include any Federal excise taxes or sales taxes imposed by any State or Municipal Government. Such taxes, if included, must be deducted by the vendor when submitting claim for payment.

24) Non-Appropriation of Funds: It is understood that Town funds are contingent upon the availability of lawful appropriations by the Town Council. Subject to the applicable provisions of the Town Charter, the Town represents: that it has adequate funds to meet its obligations under this order for the full price set forth herein; and that it has no reason to believe that it will not have sufficient funds to enable it to make all payments due hereunder during such contract period. However, if the Town Council fails at any time during such contract period(s) to continue funding for any purchase order awarded, the Towns obligations under such contract(s) are terminated as of the date that the funding expires without further obligation to the Town.

## CERTIFICATE OF ENTITLEMENT

The undersigned authorized representative of_____ (hereinafter "Governmental Entity"), Florida Consumer's Certificate of Exemption Number_____, affirms that the tangible personal property purchased pursuant to Purchase Order Number_____ from _____ (Vendor) on or after _____ (date) will be incorporated into or become a part of a public facility as part of a public works contract pursuant to contract # _____ with _____ (Name of Contractor) for the construction of _____.

Governmental Entity affirms that the purchase of the tangible personal property contained in the attached Purchase Order meets the following exemption requirements contained in Section 212.08(6), F.S., and Rule 12A-1.094, F.A.C.:

*You must initial each of the following requirements.*

____ 1. The attached Purchase Order is issued directly to the vendor supplying the tangible personal property the Contractor will use in the identified public works.

____ 2. The vendor's invoice will be issued directly to Governmental Entity.

____ 3. Payment of the vendor's invoice will be made directly by Governmental Entity to the vendor from public funds.

____ 4. Governmental Entity will take title to the tangible personal property from the vendor at the time of purchase or of delivery by the vendor.

____ 5. Governmental Entity assumes the risk of damage or loss at the time of purchase or delivery by the vendor.

Governmental Entity affirms that if the tangible personal property identified in the attached Purchase Order does not qualify for the exemption provided in Section 212.08(6), F.S., and Rule 12A-1.094, F.A.C., Governmental Entity will be subject to the tax, interest, and penalties due on the tangible personal property purchased. If the Florida Department of Revenue determines that the tangible personal property purchased tax-exempt by issuing this Certificate does not qualify for the exemption, Governmental Entity will be liable for any tax, penalty, and interest determined to be due.

I understand that if I fraudulently issue this certificate to evade the payment of sales tax I will be liable for payment of the sales tax plus a penalty of 200% of the tax and may be subject to conviction of a third degree felony.

Under the penalties of perjury, I declare that I have read the foregoing Certificate of Entitlement and the facts stated in it are true.

_____ _____

Signature of Authorized Representative Title

_____ _____

Purchaser's Name (Print or Type) Date

Federal Employer Identification Number: _____

Telephone Number: _____

You must attach a copy of the Purchase Order to this Certificate of Entitlement.

Do not send to the Florida Department of Revenue. This Certificate of Entitlement must be retained in the vendor's and the contractor's books and records.

# Village of Palm Springs

# Executive Brief

**AGENDA DATE:** May 13, 2021

**DEPARTMENT:** Public Service

---

**ITEM 6.16:** Approve MIEX DOC Resin Acquisition Agreement - Best Interest Acquisition - Public Service Department (FY 2021 Budget Funded - Water & Sewer Enterprise Fund) - IXOM Watercare, Inc.

**SUMMARY:** The Public Service Department has a need to select a vendor to provide Dissolved Organic Carbon (DOC) Resin, which is a critical component in the water pre-treatment process. The resin chemical assists with improving potable water color and removing organic compounds which interact with chlorine to create disinfectant byproducts. At this time, the Village uses a Magnetic Ion Exchange (MIEX) System, which is a proprietary water treatment process, and the manufacturer, IXOM Watercare, recommends utilizing their patented DOC Resin within our water treatment plants.

The proposed agreement to purchase MIEX DOC Resin is recommended by the manufacturer for the following reasons:

- The resin beads are very small and magnetized, which allows the contaminants to be absorbed by the resin beads thereby improving water color.
- The resin beads over time will be joined together (magnetized) and will increase the weight of the beads, thus, helping to settle to the bottom of the water tank. They then go through a regeneration process and the beads are reused (pumped back to the beginning of the water treatment process), which helps with the overall cost of producing potable water.
- The MIEX DOC resin meets all requirements for NSF/ANSI Standard 61 - Drinking Water System Components - Health Effects for control of Total Trihalomethanes (TTHM), Haloacetic Acids Five (HAA5) and color

As a result, the proposed MIEX DOC resin is essentially a sole source resin for the MIEX system. Thus, for the reasons outlined above, it is recommended that the Village acquire the

requisite MIEX DOC Resin under the Village's Purchasing Code -Section 58-11 Best Interest Acquisitions.

The Village's Purchasing Code - Section 58-11 Best Interest Acquisitions, which provides that the Village may acquire or contract for non-real property, goods or services without utilizing the competitive selection process where the Village Council determines by at least four-fifths (4/5) affirmative vote that the competitive selection process is not in the best interest of the Village. The Village Council shall make specific factual findings that support its determination, and such contracts shall be placed on the regular Village Council agenda. This provision may not be used to contract for goods or services which such contract would exceed the limits set forth in F.S. §§ 287.055 or 255.20, as amended.

If approved, the Village would accept IXOM Watercare, Inc.'s terms, conditions and pricing therein. The cost per liter of resin is $16.99, shipped in 900L containers plus freight.

The proposed agreement was prepared by the Village Attorney and reviewed by the Assistant Public Service Director/Engineer, Utilities Superintendent and the Finance Director.

The Village has worked with the proposed vendor previously and they have provided excellent service and quality products.

**FISCAL IMPACT:**

Funding to support this purchase is available within the FY 2021 Budget - Water & Sewer Enterprise Fund.

| ***Allocated/Estimated Project Funding:*** | ***Amount*** |
|---|---|
| FY 2021 Approved Budget - Water & Sewer Enterprise Fund | $700,000 |

| ***Expected Purchase Costs:*** | ***Amount*** |
|---|---|
| FY 2021 Expected Purchase Cost - Water & Sewer Fund | $300,000 |

The Village will not expend more than the amount within the approved budget as it may be adopted/amended each year for these goods and services over the term of this contract.

**ATTACHMENTS:**

Proposed Agreement - Best Interest Acquisiton - IXOM Watercare, Inc.
Sole Source Letter - IXOM Watercare, Inc.
Certificate of Liability Insurance - IXOM Watercare, Inc.

# AGREEMENT

**THIS AGREEMENT** is made this _____day of _____, 2021 between the **Village of Palm Springs**, Florida, a municipal corporation, hereinafter the "VILLAGE", with its office located at 226 Cypress Lane, Palm Springs, Florida 33461, and **IXOM Watercare, Inc.,** a corporation authorized to do business in the State of Florida, hereinafter the "CONTRACTOR", with its office located at 8150 S. Akron St., Suite 401, Centennial CO 80112.

## RECITALS

WHEREAS, the VILLAGE is a municipal corporation organized and existing pursuant to the Charter and the Constitution of the State of Florida;

WHEREAS, the VILLAGE wishes to purchase materials from CONTRACTOR;

WHEREAS, CONTRACTOR submitted a proposal for the delivery of materials as a best interest provider pursuant to Section 58-11 of the Village Code;

WHEREAS, the VILLAGE desires to accept the CONTRACTOR's proposal in order for CONTRACTOR to render the goods and services to the VILLAGE as provided herein;

WHEREAS, the CONTRACTOR further warrants that it is experienced and capable of performing the tasks hereunder in a professional and competent manner;

WHEREAS, the VILLAGE finds awarding the contract to the CONTRACTOR as described herein serves a valid public purpose.

NOW THEREFORE, the VILLAGE hereby engages the services of the CONTRACTOR, and in consideration of the mutual promises herein contained, the sufficiency of which is hereby acknowledged by both parties, the parties agree as follows:

## 1. SCOPE OF WORK

1.1 The scope of work is the providing of material, as set forth in Exhibit "A", incorporated herein and attached hereto. CONTRACTOR shall provide the material as requested by the VILLAGE.

1.2 The CONTRACTOR represents to the VILLAGE that the services and materials provided under this Agreement shall be in accordance with accepted and established trade practices and procedures recognized in the CONTRACTOR's trade in general and that the materials shall conform to the highest standards and in accordance with this Agreement.

1.3 The CONTRACTOR represents that it is licensed to do business in the State of Florida and holds and will maintain all applicable licenses required for the work to be completed under this Agreement. The CONTRACTOR further warrants its capability and experience to perform the work provided for herein in a professional and competent manner.

## 2. USE OF AGENTS OR ASSISTANTS

2.1 To the extent reasonably necessary to enable the CONTRACTOR to perform its work hereunder, the CONTRACTOR shall be authorized to engage the services of any agents or assistants which it may deem proper, and may further employ, engage, or retain the services of such other persons or corporations to aid or assist in the proper performance of its duties. All costs of the services of, or expenses incurred by, such agents or assistants shall be paid by the CONTRACTOR.

## 3. FEE AND TERM

3.1 For the parts to be provided under this Agreement, the CONTRACTOR shall be entitled to payment as set forth in CONTRACTOR's proposal, attached hereto as Exhibit "A" and incorporated herein.

3.2 Should the VILLAGE require additional services or materials, not included in this Agreement, fees and payment for such work will be set forth in a separate Addendum, as authorized in accordance with the VILLAGE's procurement code prior to any such additional goods being provided by the CONTRACTOR.

3.3 This Agreement shall become effective upon execution by both parties and shall be effective for a period of (5) years from the effective date.

## 4. MAXIMUM COSTS

4.1 The CONTRACTOR expressly acknowledges and agrees that the total cost to provide the material is specified in the CONTRACTOR's proposal, and no additional costs shall be authorized without prior written approval from VILLAGE's governing body.

## 5. INVOICE

5.1 The CONTRACTOR shall submit an itemized invoice to the VILLAGE for approval prior to receiving compensation. The CONTRACTOR shall be paid within thirty (30) days of receipt of an approved invoice for work.

## 6. COPIES OF DATA/DOCUMENTS

6.1 Copies or original documents prepared by the CONTRACTOR in relation to work associated with this Agreement shall be provided to the VILLAGE. Data collected, stored, and/or provided shall be in a form acceptable to the VILLAGE and agreed upon by the VILLAGE.

## 7. OWNERSHIP

7.1 Each and every report, draft, work product, map, record, and other document reproduced, prepared, or caused to be prepared by the CONTRACTOR pursuant to or in connection with this Agreement shall be the exclusive property of the VILLAGE.

## 8. DEFAULTS, TERMINATION OF AGREEMENT

8.1 If the CONTRACTOR fails to satisfactorily perform the work specified in this Agreement; or, is in material breach of a term or condition of this Agreement, the Public Services Director may give written notice to the CONTRACTOR specifying defaults to be remedied. Such notice shall set forth the basis for any dissatisfaction and suggest corrective measures. If the CONTRACTOR does not remedy defaults within the allotted time or commence good faith steps to remedy the default to the reasonable satisfaction of the Public Services Director, the VILLAGE may take such action to remedy the default and all expenses related thereto shall be borne by the CONTRACTOR including, without limitation, utilization of another contractor to provide for such work; and/or, the VILLAGE may withhold any money due or which may become due to the CONTRACTOR for such expense and/or work related to the claimed default. Alternatively, or in addition to the foregoing, if after three (3) days the CONTRACTOR has not remedied defaults or commenced good faith steps to remedy defaults to the satisfaction of the Public Services Director, the VILLAGE may elect to terminate this Agreement. No compensation shall be paid for de-mobilization, take-down, disengagement wind-down, lost profits or other costs incurred due to termination of this Agreement under this paragraph 8.1.

8.2 Notwithstanding paragraph 8.1, the VILLAGE reserves the right and may elect to terminate this Agreement at any time, with or without cause. At such time, the CONTRACTOR would be compensated only for the parts provided to the date of termination. In the event material has been ordered or is in the process of being manufactured, the VILLAGE must pay for all material ordered or manufactured. No compensation shall be paid for de-mobilization, take-down, disengagement wind-down, lost profits or other costs incurred due to termination of this Agreement under this paragraph 8.2.

## 9. INSURANCE

9.1 The CONTRACTOR shall, at its own expense, procure and maintain throughout the term of this Agreement, with insurers acceptable to the VILLAGE, the types and amounts of insurance conforming to the minimum requirements set forth below. The CONTRACTOR shall not commence services until the required insurance is in force and evidence of insurance acceptable to the VILLAGE has been provided to, and approved by, the VILLAGE. An appropriate Certification of Insurance shall be satisfactory evidence of insurance. Until such insurance is no longer required by this Contract, the CONTRACTOR shall provide the VILLAGE with renewal or replacement evidence of insurance at least thirty (30) days prior to the expiration or termination of such insurance.

A. The CONTRACTOR shall maintain, during the life of this Agreement, commercial general liability, including contractual liability insurance in the amount of $1,000,000 per occurrence and $2,000,000 aggregate, to protect the CONTRACTOR from claims for damages for bodily and personal injury, including wrongful death, as well as from claims of property damages which may arise from any operations under this Agreement, whether such operations be by the CONTRACTOR or by anyone directly employed by or contracting with the CONTRACTOR.

B. The CONTRACTOR shall maintain, during the life of this Agreement, comprehensive automobile liability insurance in the minimum amount of $1,000,000 combined single limit for bodily injury and property damages liability to protect the CONTRACTOR from claims for damages for bodily and personal injury, including death, as well as from claims for property damage, which may arise from the ownership, use, or maintenance of owned and non-owned automobiles, including rented automobiles whether such operations be by the CONTRACTOR or by anyone directly or indirectly employed by the CONTRACTOR.

C. The CONTRACTOR shall maintain, during the life of this Agreement, Workers' Compensation Insurance and Employer's Liability Insurance for all employees as required by Florida Statutes.

All insurance, other than Worker's Compensation, to be maintained by the CONTRACTOR shall specifically include the VILLAGE as an "Additional Insured".

9.2 The insurance provided by the CONTRACTOR shall apply on a primary basis. Any insurance, or self-insurance, maintained by the VILLAGE Council shall be excess of, and shall not contribute with, the insurance provided by the CONTRACTOR. Except as otherwise specified, no deductible or self-insured retention is permitted.

9.3 Compliance with these insurance requirements shall not limit the liability of the CONTRACTOR. Any remedy provided to the VILLAGE by the insurance provided by the VILLAGE shall be in addition to and not in lieu of any other remedy (including, but not limited to, as an indemnitee of the CONTRACTOR) available to the VILLAGE under this Agreement or otherwise.

9.4 Neither approval nor failure to disapprove insurance furnished by the CONTRACTOR shall relieve the CONTRACTOR from responsibility to provide insurance as required by this Agreement.

9.5 The CONTRACTOR's failure to obtain, pay for, or maintain any required insurance shall constitute a material breach upon which the VILLAGE may immediately terminate or suspend this Agreement. In the event of any termination or suspension, the VILLAGE may use the services of another contractor without the VILLAGE incurring any liability to the CONTRACTOR.

9.6 At its sole discretion, the VILLAGE may obtain or renew the CONTRACTOR's insurance, and the VILLAGE may pay all or part of the premiums. Upon demand, the CONTRACTOR shall repay the VILLAGE all monies paid to obtain or renew the insurance. The VILLAGE may offset the cost of the premium against any monies due the CONTRACTOR from the VILLAGE.

## 10. WAIVER OF BREACH

10.1 The waiver by either party of any breach of any provision of this Agreement shall not operate or be construed as a waiver of any subsequent breach of that same or any other provision.

**11. E-VERIFY.**

11.1 Pursuant to Section 448.095(2), Florida Statutes, beginning on January 1, 2021, the CONTRACTOR shall:

A. Register with and use the E-Verify system to verify the work authorization status of all newly hired employees and require all subcontractors (providing services or receiving funding under this Agreement) to register with and use the E-Verify system to verify the work authorization status of all the subcontractors' newly hired employees;

B. Secure an affidavit from all subcontractors (providing services or receiving funding under this Agreement) stating that the subcontractor does not employ, contract with, or subcontract with an "unauthorized alien" as defined in Section 448.095(1)(k), Florida Statutes;

C. Maintain copies of all subcontractor affidavits for the duration of this Agreement and provide the same to the Owner upon request;

Comply fully, and ensure all of its subcontractors comply fully, with Section 448.095, Florida Statutes;

D. Be aware that a violation of Section 448.09, Florida Statutes (Unauthorized aliens; employment prohibited) shall be grounds for termination of this Agreement; and,

E. Be aware that if the VILLAGE terminates this Agreement under Section 448.095(2)(c), Florida Statutes, the CONTRACTOR may not be awarded a contract for at least one (1) year after the date on which the Agreement is terminated and will be liable for any additional costs incurred by the VILLAGE as a result of the termination of the Agreement.

**12. ENTIRE AGREEMENT AND ORDER OF PRECEDENCE**

12.1 This Agreement consists of the terms and conditions provided herein; and, the CONTRACTOR's proposal. To the extent that there exists a conflict between this Agreement and the remaining documents, the terms, conditions, covenants, and/or provisions of this Agreement shall prevail. Wherever possible, the provisions of such documents shall be construed in such a manner as to avoid conflicts between provisions of the various documents.

12.2 This Agreement supersedes any and all other Agreements, either oral or in writing, between the parties hereto with respect to the subject matter hereof, and no other Agreement, statement, or promise relating to the subject matter of this Agreement which is not contained herein shall be valid or binding.

## 13. ASSIGNMENT

13.1 Nothing under this Agreement shall be construed to give any rights or benefits to any party other than the VILLAGE and the CONTRACTOR. All duties and responsibilities under this Agreement shall be for the sole and exclusive benefit of the VILLAGE and the CONTRACTOR and not for the benefit or any other party. The CONTRACTOR shall not assign any right or interest in this Agreement, and shall not delegate any duty owned, without the VILLAGE's prior written consent. Any attempted assignment or delegation shall be void and totally ineffective for all purposes, and shall constitute a material breach upon which the VILLAGE may immediately terminate or suspend this Agreement.

13.2 In the event the VILLAGE consents to an assignment or delegation, the assignee, delegate, or its legal representative shall agree in writing to personally assume, perform, and be bound by this Agreement's covenants, conditions, obligations and provisions.

## 14. SUCCESSORS AND ASSIGNS

14.1 Subject to the provision regarding assignment, this Agreement shall be binding on the heirs, executors, administrators, successors, and assigns of the respective parties.

## 15. WAIVER OF TRIAL BY JURY

15.1 TO ENCOURAGE PROMPT AND EQUITABLE RESOLUTION OF ANY LITIGATION, EACH PARTY HEREBY WAIVES ITS RIGHTS TO A TRIAL BY JURY IN ANY LITIGATION RELATED TO THIS AGREEMENT.

## 16. GOVERNING LAW AND REMEDIES

16.1 The validity of this Agreement and of any of its terms or provisions, as well as the rights and duties of the parties hereunder, shall be governed by the laws of the State of Florida and venue shall be in Palm Beach County, Florida.

16.2 No remedy herein conferred upon any party is intended to be exclusive of any other remedy, and each and every such remedy shall be cumulative and shall be in addition to every other remedy given hereunder or now or hereafter existing at law or in equity or by statute or otherwise. No single or partial exercise by any party of any right, power, or remedy hereunder shall preclude any other or further exercise thereof.

## 17. TIME IS OF THE ESSENCE

17.1 Time is of the essence in the delivery of the goods as specified herein.

## 18. NOTICES

18.1 All notices hereunder must be in writing and, unless otherwise provided herein, shall be deemed validly given on the date when personally delivered to the address indicated below; or on the third (3rd) business day following deposit, postage prepaid, using certified mail, return receipt requested, in any U.S. postal mailbox or at any U.S. Post Office; or when sent via nationally recognized overnight courier to the address indicated below. Should the VILLAGE or the CONTRACTOR have a change of address, the other party shall immediately be notified in writing of such change, provided, however, that each address for notice must include a street address and not merely a post office box. All notices, demands or requests from the CONTRACTOR to the VILLAGE shall be given to the VILLAGE address as follows:

Public Services Director
Village of Palm Springs
226 Cypress Lane
Palm Springs, Florida 33461

All notices, demands or requests from the VILLAGE to the CONTRACTOR shall be given to the CONTRACTOR address as follows:

IXOM Watercare, Inc.
33101 East Quincy Avenue
Watkins, CO 80137

## 19. SEVERABILITY

19.1 Should any part, term or provision of this Agreement or any document required herein to be executed be declared invalid, void or unenforceable, all remaining parts, terms and provisions hereof shall remain in full force and effect and shall in no way be invalidated, impaired or affected thereby.

## 20. DELAYS AND FORCES OF NATURE

20.1 The CONTRACTOR shall not be considered in default by reason of a delay in timely performance if such delay and failure arises out of causes reasonably beyond the control of the CONTRACTOR or its subcontractors and without their fault or negligence. Upon the CONTRACTOR's request, the VILLAGE shall consider the facts and extent of any such delay and failure to timely perform the work for reason beyond the control of the CONTRACTOR and, if the CONTRACTOR'S delay and failure to timely perform was without it or its subcontractors' fault or negligence, as determined by the VILLAGE in its sole discretion, the time of completion shall be extended for any reasonable time that the VILLAGE, in its sole discretion, may decide; subject to the VILLAGE'S rights to change, terminate, or stop any or all of the work at any time. If the CONTRACTOR is delayed at any time in the progress of the work by any act or neglect of the VILLAGE or its

employees, or by any other contractor employed by the VILLAGE, or by changes ordered by the VILLAGE, unavoidable casualties, or any causes beyond the CONTRACTOR'S control, or by delay authorized by the VILLAGE pending negotiation or by any cause which the VILLAGE, in its sole discretion, shall decide justifies the delay, then the time of completion shall be extended for any reasonable time the VILLAGE, in its sole discretion, may decide. No extension of time shall be made for any delay occurring more than five (5) days before a claim therefore is made in writing to the VILLAGE. In the case of continuing cause of delay, only one (1) claim is necessary. The CONTRACTOR's sole remedy for a delay in completion of the work for any reason will be an extension of time to complete the work and CONTRACTOR specifically waives any right to seek any monetary damages or losses for a delay in completion of the work, including, but not limited to, waiving any right to seek monetary amounts for lost profits, additional overhead, salaries, lost productivity, efficiency losses, or any other alleged monetary losses which may be allegedly suffered by CONTRACTOR due to a delay in completion of the work.

20.2 Neither party shall be considered in default in the performance of its obligations hereunder or any of them, if such obligations were prevented or delayed by any cause, existing or future beyond the reasonable control of such party which include but are not limited to acts of God, labor disputes or civil unrest.

## 21. COUNTERPARTS

21.1 This Agreement may be executed in counterparts, each of which shall be an original, but all of which shall constitute one and the same document. Each of the parties shall sign a sufficient number of counterparts, so that each party will receive a fully executed original of this Agreement.

## 22. LIMITATIONS OF LIABILITY

22.1 Under no circumstances shall either party be liable to the other for any consequential, incidental, special, punitive, or any other form of indirect or non-compensatory damages.

## 23. PUBLIC ENTITY CRIMES

23.1 CONTRACTOR acknowledges and agrees that a person or affiliate who has been placed on the convicted vendor list following a conviction for a public entity crime may not submit a bid, proposal, or reply on a contract to provide any goods or services to a public entity; may not submit a bid, proposal, or reply on a contract with a public entity for the construction or repair of a public building or public work; may not submit bids, proposals, or replies on leases of real property to a public entity; may not be awarded or perform work as a contractor, supplier or sub-contractor under a contract with any public entity; and may not transact business with any public entity in excess of the threshold amount

provided in Section 287.017, Florida Statues, for CATEGORY TWO for a period of 36 months following the date of being placed on the convicted vendor list. CONTRACTOR will advise the VILLAGE immediately if it becomes aware of any violation of this statute.

## 24. PREPARATION

24.1 This Agreement shall not be construed more strongly against either party regardless of who was more responsible for its preparation.

## 25. PALM BEACH COUNTY INSPECTOR GENERAL

25.1 In accordance with Palm Beach County ordinance number 2011-009, the CONTRACTOR acknowledges that this Agreement may be subject to investigation and/or audit by the Palm Beach County Inspector General. The CONTRACTOR has reviewed Palm Beach County ordinance number 2011-009 and is aware of its rights and/or obligations under such ordinance.

## 26. ENFORCEMENT COSTS

26.1 All parties shall be responsible for their own attorneys' fees, court costs and expenses if any legal action or other proceeding is brought for any dispute, disagreement, or issue of construction or interpretation arising hereunder whether relating to the Contract's execution, validity, the obligations provided therein, or performance of this Contract, or because of an alleged breach, default or misrepresentation in connection with any provisions of this Contract.

## 27. PUBLIC RECORDS

CONTRACTOR shall comply with Florida's Public Records Laws, and specifically agrees to:

(a) Keep and maintain public records that ordinarily and necessarily would be required by the VILLAGE in order to perform the service.

(b) Upon request from the VILLAGE's custodian of public records or designee, provide the VILLAGE with a copy of the requested records or allow the records to be inspected or copied within a reasonable time at a cost that does not exceed the cost provided in this Chapter 119, Florida Statutes, or as otherwise provided by law.

(c) Ensure that public records that are exempt or confidential and exempt from public records disclosure requirements are not disclosed except as authorized by law.

(d) Meet all requirements for retaining public records and transfer, at no cost, to the VILLAGE all public records in possession of the CONTRACTOR upon termination of the Agreement and destroy any duplicate public records that are exempt or confidential and exempt from public records

disclosure requirements. All records stored electronically must be provided to the VILLAGE in a format that is compatible with the information technology systems of the VILLAGE.

**IF THE CONTRACTOR HAS QUESTIONS REGARDING THE APPLICATION OF CHAPTER 119, FLORIDA STATUTES, TO THE VENDOR'S DUTY TO PROVIDE PUBLIC RECORDS RELATING TO THIS CONTRACT, CONTACT THE CUSTODIAN OF PUBLIC RECORDS OR DESIGNEE AT 561-434-5084, kwynn@vpsfl.org, OR BY MAIL AT VILLAGE OF PALM SPRINGS, 226 CYPRESS LANE, PALM SPRINGS, FL 33461**.

## 28. COPYRIGHTS AND/OR PATENT RIGHTS

28.1 CONTRACTOR warrants that there has been no violation of copyrights and/or patent rights in the manufacturing, producing of selling the goods, shipped or ordered, as a result of this proposal and the CONTRACTOR agrees to hold the VILLAGE harmless from any and all liability, loss, or expense occasioned by any such violation.

## 29. COMPLIANCE WITH OCCUPATIONAL SAFETY AND HEALTH

29.1 CONTRACTOR certifies that all services, material, equipment, etc., provided in this bid meets all OSHA requirements. CONTRACTOR further certifies that, if the services, material, equipment, etc., provided, is subsequently found to be deficient in any OSHA requirements in effect on date of delivery or performance, all costs necessary to bring the services, material, equipment, etc. into compliance with the aforementioned requirements shall be borne by the CONTRACTOR.

## 30. FEDERAL AND STATE TAX

30.1 The VILLAGE of Palm Springs is exempt from Federal Tax and State Tax for Tangible Personal Property. The Procurement Official will sign an exemption certificate submitted by the successful Proposer. Vendors or contractors doing business with the VILLAGE shall not be exempted from paying sales tax to their suppliers for materials to fulfill contractual obligations with the VILLAGE, nor shall any Vendor/Contractor be authorized to use the VILLAGE's Tax Exemption Number in securing such materials.

**REMAINDER OF THIS PAGE INTENTIONALLY LEFT BLANK**
**SIGNATURE PAGE FOLLOWS**

IN WITNESS WHEREOF the parties hereto have made and executed this Agreement on the day and year first above written.

**VILLAGE OF PALM SPRINGS, FLORIDA**

By: _____
Bev Smith, Mayor

ATTEST:

_____
Kimberly Wynn, Village Clerk

Approved as to form and legal sufficiency:

_____
Glen J. Torcivia, Village Attorney

CONTRACTOR: **IXOM WATERCARE, INC.**

By: _____

[Corporate Seal]

Print Name: _____

Title: _____

STATE OF _____)
COUNTY OF _____)

The foregoing instrument was acknowledged before me this _____ day of _____, 20___ by _____, as _____(title), of IXOM Watercare, Inc., a corporation authorized to do business in the State of Florida, and who is personally known to me or who has produced the following _____ as identification.

Notary Public
_____
Print Name: _____
My commission expires:_____

Ixom Watercare Inc.
8150 S Akron St
Suite 401
Centennial, CO 80112

## MIEX® DOC RESIN SUPPLY AGREEMENT ("AGREEMENT")

| | |
|---|---|
| BUYER | Village of Palm Springs, a municipality having a place of business at 226 Cypress Lane, Palm Springs, FL 33461-1699 |

SUBJECT TO THE TERMS AND CONDITIONS OF THIS AGREEMENT, IXOM WATERCARE INC. ("SELLER") AGREES TO SELL TO BUYER, AND BUYER AGREES TO PURCHASE FROM SELLER, MIEX® DOC RESIN ("GOODS") FOR USE IN BUYER'S WATER TREATMENT PLANT.

| | |
|---|---|
| TERM | This Agreement shall be effective for a period of five (5) years beginning on April 29, 2021. |
| PRICES; QUANTITIES | The price for the Goods shall be fixed for the first 12 months at $16.99 ($15,291.00 per 900L tote), exclusive of shipping charges. Thereafter, prices for the Goods shall be adjusted on each anniversary of April 29 (starting in Y2022) as set out in Attachment A. No sales tax will be payable by the Village of Palm Springs (Florida State Sales Tax Exemption Certificate Number: 60-40-11379-54C).<br><br>The minimum order quantity required for each delivery is three (3) 900L totes. |
| ORDERS | Seller will ensure that sufficient quantities of MIEX® Resin are supplied as may be required for the continued operation of the Plant. During the Term and any Renewal Period, Buyer shall source its requirements for water treatment resin exclusively from Seller. At all times, Buyer shall maintain an inventory of no less than two (2) 900 Liter totes. |
| PACKAGING | Goods will be supplied in 900 Liter totes (see Attachment B). |
| DELIVERY | Deliveries shall be made to Buyer's Plant. Buyer shall have available during normal business hours suitable equipment and personnel at the Plant to promptly unload all deliveries of Goods from the delivery vehicle. Deliveries shall be made within ten (10) business days from the date Seller receives Buyer's written order.<br><br>Deliveries shall be made to Buyer's Main Treatment Plant located 360 Davis Road, Palm Springs, FL 33461 (the "Plant"). |
| PAYMENT TERMS | Net thirty (30) days from date of invoice. |
| AGREEMENT DOCUMENTS | This Agreement consists of this document, the attached General Terms and Conditions of Sale, and Attachments A (Resin Price and Adjustment Terms) and B (Product Specifications). |

This Agreement is executed for and on behalf of Buyer and Seller by their duly authorized representatives.

| **VILLAGE OF PALM SPRINGS** ("Buyer") | **IXOM WATERCARE INC.** ("Seller") |
|---|---|
| Signature: _____ | Signature: Cliff Tormey |
| Name (print): _____ | Name (print): Clifton Tormey |
| Title: _____ | Title: Ixom Watercare Manager |
| Date: _____ | Date: 04/29/21 |

## ATTACHMENT A
## RESIN PRICE AND ADJUSTMENTS

**Annual Adjustments.** On each anniversary of the effective date of this Agreement, the price per liter of the MIEX® DOC Resin will be increased by Seller by a percentage not to exceed the percentage increase in the Consumer Price Index for All Urban Consumers (CPI-U) for the U.S. City Average for All Items (Base Index 1982-84=100), as published by the U.S. Bureau of Labor Statistics, over the immediately preceding twelve (12) month period. In no event, however, shall the prices for MIEX® DOC Resin be less than the prices paid during the previous twelve (12) months of the Agreement. In the event the index specified above is either unavailable or is no longer published, the most comprehensive official index then published by the United States Department of Labor, Bureau of Labor Statistics that most clearly approximates the index specified above shall be substituted in place thereof. Seller shall provide Buyer with fifteen (15) days written notice of the adjusted prices.

**Price Adjustments Due to Increased Costs.** If Seller experiences increases of more than ten percent (10%) in the aggregate costs of raw materials, handling and/or transportation of the MIEX® DOC Resin in any one calendar year, or more than twenty five percent (25%) in the aggregate during any three consecutive calendar years, Seller may notify Buyer of its need to increase the prices for the MIEX® DOC Resin to reflect such increased costs (the "Cost Notice"). Promptly after receipt by Buyer of any Cost Notice, Seller and Buyer shall negotiate in good faith to arrive at a revised price for the Goods that reflects such cost increases. If the parties have negotiated in good faith but are unable to agree on a revised price within sixty (60) days after receipt by Buyer of the Cost Notice, either party may terminate the Agreement upon ninety (90) days' notice to the other party. Seller shall fill all purchase orders received prior to the effective date of the price adjustment at the prices in effect at the time the purchase order was received by Seller.

## ATTACHMENT B

## MIEX® DOC RESIN PRODUCT SPECIFICATION

IXOM

| | |
|---|---|
| Manufacturing code | MIEX® DOC |
| Type | Strong Base Anion Exchange Resin |
| Matrix | Methacrylate-DVB/TMPTMA, macroporous |

**Typical properties***

| | |
|---|---|
| Form | 90% (v/v) slurry in water |
| Physical appearance | Opaque beads |
| Colour | Brown |
| Working pH range | 3 – 10 |
| Regeneration method | NaCl, $NaHCO_3$ |
| Dry bulk settled density, g/mL resin | 0.20 – 0.22 |
| Capacity, meq/mL resin | 0.40 – 0.44 |
| Magnetic content, % (w/w) | 24 – 25 |
| Mean particle size, μm | 200 – 250 |

* Product sales specifications available on request

**Suggested applications**

MIEX® DOC is a strong base anion exchange resin that was developed for removal of DOC (dissolved organic carbon). The resin displays excellent resistance to organic fouling. It can be used for removal of nitrate and bromide.**

MIEX® DOC Resin has been certified by the NSF as meeting all requirements for NSF/ANSI Standard 61 - Drinking Water System Components - Health Effects. The resin appears in the list of Approved Products and Processes on the Drinking Water Inspectorate (UK) website. Application areas include potable and wastewater applications.

***MIEX® resin is not usually used in a packed column. Please contact a sales office for guidance.*

**NOTE:** 90% v/v slurry is at time of packaging. MIEX Resin beads will further settle and pack into a more dense mass during storage and transport to customer sites over several months periods or years until used.

**4/29/21 VPS/IXOM JOINT TERMS AND CONDITIONS OF SALE**

These terms and conditions (collectively, "Terms and Conditions") govern all sales of products, equipment and services (collectively, "Goods") agreed to be supplied by IXOM Watercare Inc ("Seller") to any person to whom any quotation is made or who is offering to contract with the Seller ("Buyer"). The Terms and Conditions are incorporated into any order, offer, arrangement or understanding between the Seller and the Buyer (including pursuant to a quotation or letter of offer accepted by the Buyer) as well as any quotation or invoice or any other document to which they are attached (individually and collectively "Order"). All purchases by Buyer are expressly limited and conditioned upon acceptance of the Terms and Conditions and without limiting any other mode of acceptance, Buyer's acceptance of the Goods manifests Buyer's assent to the Terms and Conditions and the credit terms offered by Seller. Seller objects to and rejects any provision additional to or different from the Terms and Conditions that may appear in Buyer's purchase order, acknowledgement, confirmation, writing or in any prior or later communication from Buyer to Seller, unless Seller expressly agrees to such provision in a written amendment signed by Seller. An Order together with these Terms and Conditions are herein referred to as "Contract".

**1. PRICES; TAXES; PAYMENT TERMS; DEFAULT**.

(a) Prices for Goods and any adjustments to such prices shall be determined in accordance with Seller's final pricing letter or offer forming part of the Contract which has been accepted by Buyer ("Price").

(b) Prices do not include any sales, use, excise, privilege, or other taxes or assessments imposed on the Goods sold hereunder and unless Buyer provides proof of exemption satisfactory to Seller, such may be added to the price of the Goods.

(c) Subject to Section 1(e) and unless otherwise agreed in writing, payment terms are net 30 days from date of invoice. Payments not received when due shall incur service charges at the rate of 1½% per month (18% per annum) until paid, compounded on a daily basis.

(d) If any of the events set out in this Section 1(d)(i) through (v) below occur, Seller reserves the right, among other remedies, to delay or suspend further shipments or require full or partial cash payment in advance until all sums due have been paid. Buyer shall be liable for all costs and expenses incurred by Seller in collecting any overdue amounts, including without limitation reasonable attorneys' fees..

(i) Buyer defaults in any payments or is unable or states that it is unable to pay its debts as and when they fall due.

(ii) Buyer commits an act of bankruptcy, files a voluntary petition in bankruptcy or has filed against it an involuntary petition in bankruptcy or has a trustee, receiver, liquidator, custodian, conservator, manager, controller or voluntary administrator appointed in respect of Buyer's estate or any part of Buyer's property or assets.

(iii) Buyer passes a resolution for its winding up or enters into liquidation or has an application for winding up filed against it.

(iv) Buyer makes an assignment for the benefit of its creditors.

(v) Buyer experiences any analogous event having substantially similar effect to any of the events listed above.

(e) Notwithstanding Section 1(a), Seller may at any time in its sole and unfettered discretion and without being under any duty or obligation to assign reasons, review, alter or terminate Buyer's credit limit or payment terms without notice. Without limiting the generality of the foregoing, the decision of Seller shall be final and Seller accepts no liability or responsibility for any loss, howsoever arising, incurred by Buyer due to the operation of this condition.

**2. SHIPMENT; DELIVERY AND RESPONSIBILITY TO PURCHASE**.

(a) Unless agreed otherwise in writing, all shipments are F.C.A. Seller's or its sub-contractor's warehouse. Shipping dates are estimates only and are subject to Seller's lead time policy. Seller shall make all reasonable efforts to have Goods delivered to Buyer on or about the date or within the time frame of the Order but Seller shall not be liable for any failure or delay in delivery for any reason. Buyer is responsible for disposing of all non-returnable containers and shipping materials

(b) Purchase orders issued by Buyer and placed with Seller are irrevocable and Buyer is contractually obliged to take delivery and pay for all Goods ordered and supplied or made available by Seller pursuant to such purchase order. If Seller does not receive forwarding instructions sufficient to enable it to dispatch Goods within fourteen (14) days after notice to Buyer that such Goods are ready, Buyer shall be deemed to have taken delivery from such date and shall be obliged to pay reasonable storage charges payable on demand. Unless otherwise agreed upon by the parties in writing, if Buyer does not accept delivery or collect Goods from Seller when made available at the agreed delivery point in accordance with the Contract, Buyer also will pay Seller for storage costs and reimburse Seller for any demurrage, transport or futile delivery costs incurred by Seller.

**3. TITLE; RISK OF LOSS OR DAMAGE**.

Title to and risk of loss of the Goods shall pass to Buyer upon delivery to the carrier at point of shipment.

**4. INSPECTION; ACCEPTANCE**.

Buyer shall promptly examine the Goods for any damage or shortage or failure of the Goods to comply with the Seller's standard sales specifications or the specifications contained in or referenced in the Contract. All claims for damage or shortage of Goods shall be deemed waived unless made in writing and received by Seller within 30 days of delivery of the Goods. If Buyer finds that any of the Goods do not comply with the specifications, Buyer may, at its option, reject that portion of the Goods that fail to comply by providing Seller with a notice made in writing and received by the Seller within 30 days of delivery of the Goods. Failure to timely deliver written notice of any such claim or rejection of the Goods within the warranty period specified in this clause 4 shall be deemed an absolute and unconditional waiver of such claim for damage or shortage or a right to reject such Goods and all claims related thereto and shall constitute an unqualified acceptance of such Goods, irrespective of whether the facts giving rise to such claim shall have then been discovered or of whether use or application of the Goods shall have then taken place.

5. **RETURNS**.

Returned Goods shall not be accepted unless Buyer obtains prior written approval and transportation instructions from Seller. All Goods returned to Seller must be in full containers or cases, unopened and in the same condition as when delivered. If a return is approved by Seller, Goods may be returned for exchange or credit only. Seller shall give no cash refunds for returned Goods. Approved returned Goods are subject to a restocking charge of 15% of the invoiced value of such Goods and Buyer shall pay all transportation charges.

**6. LIMITED WARRANTY**.

(a) Subject to Section 6(e) and Section 7 below, Seller warrants title and that the Goods shall conform to Seller's standard sales specifications in effect at the time of manufacture or the specifications agreed by the parties in writing and contained or referenced in the Order. Equipment components not manufactured by Seller which are incorporated in the Goods may, if specified elsewhere in the Contract, be subject only to warranties of Seller's vendors and Seller hereby assigns to Buyer all such rights in such vendor's warranties and will provide reasonable assistance in enforcing such rights.

(b) Buyer is solely responsible for determining that the Goods and their specification and scope are appropriate for Buyer's intended use. Any advice or recommendations by Seller with respect to the Goods or the use of the Goods are provided in good faith based on tests or experience believed to be reliable but such advice or recommendations are not warranted. Buyer agrees that it is responsible for ensuring that Goods that comply with the warranties in Section 6(a) are fit and suitable for its purposes, requirements, processes, plant and equipment.

(c) To the maximum extent permitted by law, Seller makes no other representation or warranty of any kind, and hereby expressly disclaims all other representations or warranties, express, implied, statutory or arising from a course of dealing, usage of the trade or otherwise, including without limitation any representation or warranty as to merchantability, fitness for a particular purpose, or any other matter with respect to the goods, whether used alone or in combination with any other goods, substances processes or materials or services.

(d) In the event the exclusion of some or all of such warranties under section 6(c) for certain goods subject to this contract would be illegal, any additional warranty would be limited to the warranty required by applicable law and to the extent permitted by such law, would be subject to section 6(e) and section 7, and is conditioned upon use in accordance with label directions under normal conditions reasonably foreseeable to seller with buyer assuming the risk of any use contrary to label directions, under abnormal conditions or under conditions not reasonably foreseeable to seller.

(e) Seller's sole liability and Buyer's sole remedy for breach of warranty are specifically limited to the repair of the goods (or re-performance of services when applicable) or the cost thereof where Seller fails to perform such repair necessitate by a breach of warranty, and such liability and remedy re exclusive of all other liabilities and remedies. Should these remedies be found inadequate or to have failed of their essential purpose for any reason whatsoever, Buyer agrees that the return of the amount paid by buyer to seller for the purchase of the goods which fail to conform with the warranties set forth in section 7 shall be considered a fair and adequate remedy and prevent the remedies from failing of their essential purpose.

**7. LIMITATION OF LIABILITY.**

(a) The liability of Seller and its affiliates to Buyer under and in connection with the Contract is limited to the price allocable to the Goods giving rise to the claim and in no event shall the cumulative liability of Seller howsoever arising,

whether under warranty, contract, tort, negligence, strict liability, indemnification, defense or any other cause or combination of causes whatsoever, exceed the total payments received from Buyer under the Contract in connection with the Goods.
(b) To the extent permitted by law and not withstanding any provision to the contrary in the contract, Seller shall not be liable for special, indirect, incidental or consequential damages, including without limitation, and loss of profits. Loss of business revenues, loss of capital, failure to realize expected profits or savings, overhead costs, loss by reason of service interruption or increased expense of operation, loss of goodwill, loss of reputation, loss of value in any intellectual property, damages or liquidated sums payable pursuant to other agreements or to other third parties, other economic losses, whether arising under warranty, contract; negligence (including negligent misrepresentation) or other tort, strict liability, breach of statute, indemnification, or any other cause or combination of causes, including any theories of concurrent liability arising from a duty of care by operation of law or otherwise.

**8. SAFE STORAGE HANDLING AND USE; ASSUMPTION OF RISK; INDEMNIFICATION**.

Buyer acknowledges that it is familiar with the risks associated with the storage, handling and use of Goods and any waste resulting therefrom. Accordingly and notwithstanding anything to the contrary set forth in the Contract, Buyer covenants and warrants and shall ensure that (i) that it and its employees, agents, carriers and customers are familiar with and adhere to all necessary and appropriate precautions and safety measures to safely store, handle or use the Goods; (ii) it and its employees, agents, carriers and customers shall comply with all applicable Laws, including without limitation, environmental laws and regulations pertaining to the storage, handling and use of Goods; (iiI) shall obtain and comply with all required permits and licenses. Seller takes no responsibility for, and Buyer assumes all risks associated with waste characterization, regulatory status and chemical composition of any product, process, material, waste or substance into which the Goods are incorporated or applied. Without limiting the foregoing, Buyer shall further ensure that all storage tanks, vessels, and pipes, hoses and valves and other components used by Buyer or its employees, agents, carriers and customers to store, handle and transfer Goods which are bulk chemicals are properly installed and maintained to prevent injury, death or loss of containment during storage, handling and transfer of such Goods. If Buyer resells or distributes Goods to third parties, Buyer assumes responsibility for ensuring that it provides detailed instructions to such third parties regarding safe storage, handling and use of those Goods and any Storage Items or packaging in which such Goods are stored. To the maximum extent allowed by law, Buyer assumes all risks and liability whatsoever for all injuries, losses and damages to persons or property or otherwise and shall indemnify, defend and hold harmless Seller and Seller's employees and agents against all claims, damages, losses, costs, liabilities, and other expenses (including investigation and attorneys' fees) that Seller incurs or may be obligated to pay as a result of (i) Buyer's, its employees', agents', carriers' or customers' handling, possession, further processing, storage, use treatment, transportation, disposal, sale or other use or disposition of the Goods, whether used alone or in combination with other products, materials, substances or wastes, (ii) Buyer's, its employees', agents', carriers' or customers' violation or alleged violation of any Law, or (iii) Buyer's breach of any of its obligations set forth herein.

**9. FORCE MAJEURE.** Shipments or deliveries may be totally or partially suspended or delayed by Seller during any period in which the Seller may be prevented or hindered from manufacture, delivery or supply through any circumstances outside Seller's reasonable control or where such manufacture, delivery or supply is rendered materially more expensive by such circumstances. Circumstances beyond Seller's reasonable control shall include, without limitation, strikes, lockouts or other labor difficulty; acts of carriers; acts of God; acts of civil or military authorities; acts or omissions of Buyer; war; riot; fire; explosion; acts of terrorism; flood; any inability to obtain or lack of any necessary or adequate materials, inputs, fuel, power, labor, equipment, containers, facilities or services on usual terms; power or water shortage; accidents or breakdowns or failures of plant or machinery or apparatus; delays, congestions or blockages at sea ports or transport depots or software, hardware or communication network; changes in applicable Laws; or any other event, whether or not enumerated herein, beyond the reasonable control of Seller that makes impractical the manufacture, transportation or shipment of the Goods or of a material or other resource upon which the manufacture, transportation or shipment of the Goods depends. Seller shall not incur any liability to Buyer in respect of such suspension.

**10. INTELLECTUAL PROPERTY**.

Seller is the sole and exclusive owner of the Intellectual Property in the Goods and processes incorporated in such Goods, and the rights attached to that Intellectual Property. Nothing herein grants to Buyer any right, title or interest in or to any of the Intellectual Property in the Goods. Buyer shall not claim to have acquired any right, title or interest to the Intellectual Property in the Goods by virtue of purchasing Goods sold hereunder. Buyer shall not deconstruct, reverse compile or reverse engineer the Goods in any way for the purpose of deciphering or replicating the chemical composition of the Goods. As used herein, "Intellectual Property" means any intellectual or industrial property right anywhere in the world including, without limitation, any patent, patent application, utility model, copyright (including copyright in manuals, databases, and promotional materials), registered design and other design rights, unpatented secrets and innovations, confidential information, and any other rights that may subsist anywhere in the world in improvements, inventions and other manufacturing processes or technical and other information of Seller. Buyer shall not resell, distribute or supply the Goods to any third party for any reason without Seller's prior written consent

**11. CONFIDENTIALITY; ENTIRE AGREEMENT; AMENDMENTS; CHANGES TO TERMS AND CONDITIONS**.

(a) All information that Buyer acquires from Seller hereunder, directly or indirectly, and all information that arises out of the sale of the Goods hereunder, concerning such Goods and/or proprietary processes involved, including information concerning Seller's current and future business plans, information relating to Seller's operations, know-how, and other Seller-furnished information shall be deemed Seller's "Proprietary Information". Buyer shall (a) hold Seller's Proprietary Information in strictest confidence, (b) not disclose it to others, (c) use it solely for purposes of this Agreement and (d) upon Seller's request, either promptly deliver to Seller all such Proprietary Information that is in written, electronic or other form, including copies and summaries, or, at Seller's option, destroy such Proprietary Information and provide Buyer certification of such destruction. The obligations under this Section shall survive the expiration or termination of the Contract.

**(b)** The Contract constitutes the entire agreement of the parties with respect to the purchase and sale of Goods and supersedes and excludes all prior and other discussions, representations (contractual or otherwise) and arrangements relating to the supply of Goods, including but not limited to, those relating to the performance of Goods or results that ought to be expected from using the Goods.
(c) **These terms and conditions will govern the specific pricing attached and identified as Exhibit 1.**

**12. GOVERNING LAW**.

The rights and duties of the parties and any dispute regarding the sale of Goods covered hereby shall be resolved according to the laws of the state of Florida, without regard to its conflicts of law provisions. Buyer hereby agrees to submit to the non-exclusive jurisdiction of the courts in the state of Florida. Any controversy or claim arising out of or relating to the sale of Goods or the dealings between the parties shall be settled exclusively by arbitration in Palm Beach County, FL by a single arbitrator pursuant to the American Arbitration Association's Commercial Arbitration rules then in effect, and judgment upon the award shall be entered in any court having jurisdiction thereof. The prevailing party in any arbitration proceeding shall be entitled to recover its reasonable attorneys' fees and costs, in addition to any other relief obtained.

**13. WAIVER**.

No failure to exercise nor any delay or omission in exercising any right, power or remedy by Seller operates as or constitutes a waiver. A single or partial exercise by Seller of any right, power or remedy does not preclude any other or further exercise by it of that or any other right, power or remedy. A waiver is not valid or binding on Seller unless made in writing. No failure by Seller to exercise, nor any delay or omission by Seller in exercising any right, power or remedy nor any representation made or conduct carried out by Seller under the Contract or in connection with the supply of Goods or any of them shall constitute or provide grounds for a common law or equitable estoppel.

**14. SEVERANCE**.

If any provision of the Terms and Conditions or its application to any person or circumstances is or becomes invalid, illegal or unenforceable, the provision shall so far as possible be read down to such extent as may be necessary to ensure that it is not invalid, illegal or unenforceable. If any provision or part of it cannot be so read down, the provision or part of it shall be deemed void and severable and the remaining provisions of the Terms and Conditions shall not in any way be affected or impaired.

**15. PALM BEACH COUNTY IG:** In accordance with Palm Beach County ordinance number 2011-009, the VENDOR acknowledges that this Agreement may be subject to investigation and/or audit by the Palm Beach County Inspector General. The VENDOR has reviewed Palm Beach County ordinance number 2011-009 and is aware of its rights and/or obligations under such ordinance.

**16.** **F.S.768.28:** Buyer acknowledges the waiver of sovereign immunity for liability in tort contained in Florida Statutes Section 768.28 and acknowledges that such statue permits actions at law against the Buyer to recover damages in tort for money damages up to the amounts set forth in such statute for injury or loss of property, personal injury, or death caused by the negligence or wrongful act or omission of an employee of the municipality while acting in the scope of the employee's office or employment under circumstances in which municipality, if a private person, would be liable under the genera laws of this State. Buyer's requirement to indemnify shall not exceed those limits set forth in F.S. 768.28.

Exhibit 1

April 29, 2021

Mr. Paul Ward
Village of Palm Springs
360 Davis Rd
Palm Springs, FL 33461

RE : MIEX (R) DOC Resin Sole Source Supply

Dear Mr. Ward,

This letter is written regarding the manufacture and availability of MIEX® DOC Resin, as well as the availability of any substitute products, manufactured in North America, that may be used in the MIEX® Process.

MIEX® DOC Resin is a strong base anion exchange resin that has been developed for the removal of Dissolved Organic Carbon (DOC) and is manufactured solely by Ixom Watercare, Inc. in Deer Park, Victoria, Australia. MIEX® DOC Resin is imported into North America exclusively by Ixom Watercare, Inc. MIEX® DOC Resin is warehoused in several locations throughout the United States, with the primary warehouse in Georgia. Ixom Watercare, Inc. stocks sufficient quantities of Resin to support MIEX® plants in North America, and is the only supplier of this product and process in the world.

MIEX® DOC Resin has been certified by the NSF as meeting all requirements for NSF/ANSI Standard 61 – Drinking Water System Components – Health Effects. The MIEX® DOC Resin has two very unique properties as compared to traditional ion exchange resins. First, the resin beads are very small, with an average diameter of 180 μm, which allows for very quick uptake of contaminant species within water. Second, each resin bead contains a magnetized component within their structure, which allows the beads to act as weak individual magnets. This magnetic attraction allows the resin to quickly agglomerate when mixing energy is removed.

MIEX products and processes incorporate technology that is subject to granted patents and patent applications worldwide. MIEX DOC resin is made based on methods outlined in US patent number 6,171,489 (now expired), US patent number 7,514,500 (granted) and US patent number 10,173,197 (granted Jan 8, 2019). The properties that make MIEX® DOC Resin unique also make it impossible for a substitute product to be used in the MIEX® Process.

Ixom Watercare is committed to assisting the Village of Palm Springs in any way that is required. Please feel free to contact me if you have any questions or require any additional information.

Sincerely,

Ellen Gaby
MIEX Market Manager

Ixom Watercare Inc.
8150 S Akron Street Suite 401
Centennial, CL 80112
www.ixomwatercare.com

IXOMWAT-01 PKUNTZ

# CERTIFICATE OF LIABILITY INSURANCE

DATE (MM/DD/YYYY) 4/29/2021

THIS CERTIFICATE IS ISSUED AS A MATTER OF INFORMATION ONLY AND CONFERS NO RIGHTS UPON THE CERTIFICATE HOLDER. THIS CERTIFICATE DOES NOT AFFIRMATIVELY OR NEGATIVELY AMEND, EXTEND OR ALTER THE COVERAGE AFFORDED BY THE POLICIES BELOW. THIS CERTIFICATE OF INSURANCE DOES NOT CONSTITUTE A CONTRACT BETWEEN THE ISSUING INSURER(S), AUTHORIZED REPRESENTATIVE OR PRODUCER, AND THE CERTIFICATE HOLDER.

IMPORTANT: If the certificate holder is an ADDITIONAL INSURED, the policy(ies) must have ADDITIONAL INSURED provisions or be endorsed. If SUBROGATION IS WAIVED, subject to the terms and conditions of the policy, certain policies may require an endorsement. A statement on this certificate does not confer rights to the certificate holder in lieu of such endorsement(s).

**PRODUCER**
Choice Insurance
323 18th St W
Dickinson, ND 58601

CONTACT NAME: Phoebe Kuntz
PHONE (A/C, No, Ext): (701) 483-1864 FAX (A/C, No): (701) 483-1234
E-MAIL ADDRESS: p.kuntz@insurewithchoice.com

| INSURER(S) AFFORDING COVERAGE | NAIC # |
|---|---|
| INSURER A : Scottsdale Insurance Company | 41297 |
| INSURER B : Continental Insurance Company | 35289 |
| INSURER C : Scottsdale Indemnity Company | 15580 |
| INSURER D : National Fire Ins Co of Hartford | 20478 |
| INSURER E : | |
| INSURER F : | |

**INSURED**
Ixom Watercare Inc.
3225 Highway 22 N
Dickinson, ND 58601

**COVERAGES** **CERTIFICATE NUMBER:** **REVISION NUMBER:**

THIS IS TO CERTIFY THAT THE POLICIES OF INSURANCE LISTED BELOW HAVE BEEN ISSUED TO THE INSURED NAMED ABOVE FOR THE POLICY PERIOD INDICATED. NOTWITHSTANDING ANY REQUIREMENT, TERM OR CONDITION OF ANY CONTRACT OR OTHER DOCUMENT WITH RESPECT TO WHICH THIS CERTIFICATE MAY BE ISSUED OR MAY PERTAIN, THE INSURANCE AFFORDED BY THE POLICIES DESCRIBED HEREIN IS SUBJECT TO ALL THE TERMS, EXCLUSIONS AND CONDITIONS OF SUCH POLICIES. LIMITS SHOWN MAY HAVE BEEN REDUCED BY PAID CLAIMS.

| INSR LTR | TYPE OF INSURANCE | ADDL INSD | SUBR WVD | POLICY NUMBER | POLICY EFF (MM/DD/YYYY) | POLICY EXP (MM/DD/YYYY) | LIMITS | |
|---|---|---|---|---|---|---|---|---|
| A | X COMMERCIAL GENERAL LIABILITY | | | | | | EACH OCCURRENCE | $ 1,000,000 |
| | CLAIMS-MADE X OCCUR | | | VRS0005133 | 3/22/2021 | 3/22/2022 | DAMAGE TO RENTED PREMISES (Ea occurrence) | $ 100,000 |
| | X Employer's Liability | | | | | | MED EXP (Any one person) | $ 10,000 |
| | | | | | | | PERSONAL & ADV INJURY | $ 1,000,000 |
| | GEN'L AGGREGATE LIMIT APPLIES PER: | | | | | | GENERAL AGGREGATE | $ 2,000,000 |
| | POLICY X PRO-JECT LOC | | | | | | PRODUCTS - COMP/OP AGG | $ 2,000,000 |
| | OTHER: | | | | | | ND STOP GAP | $ 1,000,000 |
| B | AUTOMOBILE LIABILITY | | | | | | COMBINED SINGLE LIMIT (Ea accident) | $ 1,000,000 |
| | X ANY AUTO | | | 7014690902 | 3/22/2021 | 3/22/2022 | BODILY INJURY (Per person) | $ |
| | OWNED AUTOS ONLY / SCHEDULED AUTOS | | | | | | BODILY INJURY (Per accident) | $ |
| | HIRED AUTOS ONLY / NON-OWNED AUTOS ONLY | | | | | | PROPERTY DAMAGE (Per accident) | $ |
| | | | | | | | | $ |
| C | UMBRELLA LIAB X OCCUR | | | | | | EACH OCCURRENCE | $ 5,000,000 |
| | X EXCESS LIAB CLAIMS-MADE | | | VES0003344 | 3/22/2021 | 3/22/2022 | AGGREGATE | $ 5,000,000 |
| | DED X RETENTION $ 0 | | | | | | | $ |
| D | WORKERS COMPENSATION AND EMPLOYERS' LIABILITY Y / N | | | | | | X PER STATUTE OTH-ER | |
| | ANY PROPRIETOR/PARTNER/EXECUTIVE OFFICER/MEMBER EXCLUDED? (Mandatory in NH) | N / A | | 7014690916 | 3/22/2021 | 3/22/2022 | E.L. EACH ACCIDENT | $ 1,000,000 |
| | If yes, describe under DESCRIPTION OF OPERATIONS below | | | | | | E.L. DISEASE - EA EMPLOYEE | $ 1,000,000 |
| | | | | | | | E.L. DISEASE - POLICY LIMIT | $ 1,000,000 |
| A | Contractors | | | VRS0005133 | 3/22/2021 | 3/22/2022 | Pollution Occurrence | 1,000,000 |
| A | Contractors | | | VRS0005133 | 3/22/2021 | 3/22/2022 | Pollution Aggregate | 2,000,000 |

DESCRIPTION OF OPERATIONS / LOCATIONS / VEHICLES (ACORD 101, Additional Remarks Schedule, may be attached if more space is required)
Insured's general operations

**CERTIFICATE HOLDER**

Village of Palm Springs
Attn: Jon Rouse
226 Cypress Lane
Palm Springs, FL 33461

**CANCELLATION**

SHOULD ANY OF THE ABOVE DESCRIBED POLICIES BE CANCELLED BEFORE THE EXPIRATION DATE THEREOF, NOTICE WILL BE DELIVERED IN ACCORDANCE WITH THE POLICY PROVISIONS.

AUTHORIZED REPRESENTATIVE




© 1988-2015 ACORD CORPORATION. All rights reserved.
The ACORD name and logo are registered marks of ACORD

# Village of Palm Springs

# Executive Brief

**AGENDA DATE:** May 13, 2021

**DEPARTMENT:** Public Service

---

**ITEM 6.17:** Approve SCADA System Improvements Award - Main Water Treatment Plant (Task Order No. 227) - Invitation to Bid (ITB) - Public Service Department (FY 2021 Budget Funded - Water & Sewer Enterprise Fund) - Revere Control Systems, Inc.

**SUMMARY:**

The Public Service Department has identified a need to make improvements to the supervisory control and data acquisition (SCADA) system at the Main Water Treatment Plant, which would assist in the control and monitoring on various chemical feeds and water flows during the water treatment process.

Currently, the Village Council has authorized Eckler Engineering to serve as the Village's consulting engineer to complete the engineering and design for this project (Task Order #227). The proposed project consists of the installation of new control panels and SCADA computers, network improvements, SCADA software upgrades, programming, electrical wiring and site restoration. These upgrades would allow Village water treatment staff to monitor and adjust chemical feeds and water flows throughout the water plant and provide better oversight and more accurate report generation for management staff.

To ensure the lowest possible price for this project, the Village issued an Invitation to Bid (ITB) on January 14, 2021 for the SCADA system improvements at the Village's Main Water Treatment Plant. This process was completed by the Village through a competitive bid selection process - SCADA System Improvements (ITB No. 2021B-003 - January 14, 2021).

Within the Fiscal Year 2021 Budget - Water & Sewer Enterprise Fund and the Capital Improvement Plan (CIP), the Village Council approved $842,000 for the SCADA System Improvements at the Main Water Treatment Plant. As a result of the Village's ITB, the following four (4) bid proposals were received:

| **Vendor** | **Total Bid** |
|---|---|
| Revere Control Systems, Inc. | $ 866,000.00 |
| Boromei Cosntruction, Inc. | $ 924,756.00 |
| Curry Controls Company | $ 943,260.00 |
| TLC Diversified, Inc. | $1,087,600.00 |

After review of the four (4) bids received, the Assistant Public Service Director/Engineer, the Public Service Project Manager, the Utilities Superintendent, the Village Attorney and the Village's consulting engineer, Eckler Engineering, have determined that Revere Control Systems, Inc. provided the lowest responsible and responsive bid. As a result, staff is recommending that the Council award this proposed contract (Task Order #227) to the lowest responsive and responsible bidder, Revere Control Systems, Inc. in the amount of $866,000.

Note: The proposed bid amount submitted by Revere Control Systems ($866,000) is higher than the cost estimate ($816,000) by approximately 6%. The total approved budget for FY 2021 for this project is $842,000.00; however, staff beleive that approximately $266,000.00 will be spent during the FY 2021 fiscal year. therefore, this project is expected to roll over into the next fiscal year (FY 2022) and the remaining funding of $600,000.00 to complete this project is expected to be requested to be approved by the Village Council during the upcoming FY 2022 budget process and a budget transfer or amendment is not expected.

If approved, the Village would accept Revere Control Systems, Inc., pricing including all terms, conditions, and pricing as submitted within their ITB proposal. The Village will not expend more than the amount in the approved budget as it may be adopted/amended each year for these goods and services over the term of this contract. An internal budget transfer or amendment to support this proposed project will be completed within the Water & Sewer Enterprise Fund at a later date, if necessary.

If approved, the project is expected to take approximately 270 days (February/March 2022) to complete following the Notice to Proceed from the Village.

The proposed agreement was prepared by the Village Attorney and reviewed by the Assistant Public Service Director/Engineer, the Public Service Project Manager, the Utilities Superintendent and the Finance Director.

The Village has not worked with the proposed vendor previously; however, the Village has received positive references from three (3) municipalities [Gainesville Regional Utilities, Seminole County Utilities, Orange County Utilities] for the proposed vendor.

**FISCAL IMPACT:**

Funding to support the proposed SCADA improvement project is available within FY 2021 Budget - Water & Sewer Enterprise Fund:

| ***Allocated/Estimated Project Funding:*** | ***Amount:*** |
|---|---|
| FY 2018 Actual Funding - Water & Sewer Fund | $ 44,773.53 |
| FY 2019 Actual Funding - Water & Sewer Fund | $ 15,370.01 |
| FY 2020 Actual Funding - Water & Sewer Fund | $ 3,341.31 |
| FY 2021 Approved Funding - Water & Sewer Fund | $266,000.00 |
| FY 2022 Requested Funding - Water & Sewer Fund | $600,000.00 |
| **Total Allocated/Approved Budget:** | **$929,484.85** |

| ***Expected Project Costs:*** | ***Amount*** |
|---|---|
| FY 2018 Project Cost - Actual Engineering & Design - Water & Sewer Fund | $ 44,773.53 |
| FY 2019 Project Cost - Actual Engineering & Design - Water & Sewer Fund | $ 15,370.01 |
| FY 2020 Project Cost - Actual Engineering & Design - Water & Sewer Fund | $ 3,341.31 |
| FY 2021 Project Cost - Estimated Engineering & Design - Water & Sewer Fund | $ 30,480.85 |
| FY 2021 Project Cost - Estimated Construction Cost - Water & Sewer Fund | $266,000.00 |
| FY 2022 Project Cost - Estimated Construction Cost - Water & Sewer Fund$266,000.00 | $600,000.00 |
| **Total Project Request/Cost:** | **$959,965.70** |

Note: The proposed bid amount submitted by Revere Control Systems ($866,00) is higher than the cost estimate ($816,000) by approximately 6%. The total approved budget for FY 2021 for this project is $842,000.00; however, staff beleive that approximately $266,000.00 will be spent during the FY 2021 fiscal year. therefore, this project is expected to roll over into the next fiscal year (FY 2022) and the remaining funding of $600,000.00 to complete this project is expected to be requested to be approved by the Village Council during the upcoming FY 2022 budget process and a budget transfer or amendment is not expected.

The Village will not expend more than the amount within the approved budget as it may be adopted/amended each year for these goods and/or services over the term of this contract.

An internal budget transfer or amendment to support this proposed project will be completed within the Water & Sewer Enterprise Fund at a later date, if necessary.

**ATTACHMENTS:**

Proposed Agreement - SCADA System Upgrade - Revere Controls Systems, Inc.
Village Engineer's Recommendation of Award - SCADA System Upgrade - ITB #2021B-003
Bid Proposal - SCADA System Upgrades - Revere Control Systems, Inc.
Bid Tabulation Form - SCADA System Upgrade - ITB #2021B-003
Invitation to Bid - SCADA System Upgrade - ITB #2021B-003
Bid Plans - SCADA System Upgrade - ITB #2021B-003

Bid Specification - SCADA System Upgrade - ITB #2021B-003

Addendum No. 1 - Time Extension - SCADA System Upgrade - ITB #2021B-003

Addendum No. 2 - Response to Bidder Questions - SCADA System Upgrade - ITB #2021B-003

Addendum No. 3 - Response to Additional Bidder Questions - SCADA System Upgrade - ITB #2021B-003

SCADA System Upgrade - CIP Form

CONTRACT DOCUMENTS

# SCADA SYSTEM UPGRADE MAIN WATER TREATMENT PLANT (MAIN WTP)

BID NO.: 2021B-003

## VILLAGE OF PALM SPRINGS

FLORIDA

FOR INFORMATION REGARDING THIS PROJECT CONTACT
ECKLER ENGINEERING, INC.
4700 RIVERSIDE DRIVE, SUITE 110 • CORAL SPRINGS, FL 33067
PH (954) 510-4700
CA NO. 7803

BID DOCUMENTS

PROJ NO : 400-077.01
DATE : AUGUST 26, 2020

# NOTICE OF AWARD

Date of Issuance:

| | | | |
|---|---|---|---|
| Owner: | Village of Palm Springs | Owner's Task Order No.: | 227 |
| Engineer: | Eckler Engineering, Inc. | Engineer's Project No.: | 400-077.01 |
| Project: | SCADA System Upgrade<br>Main Water Treatment Plant | Contract Name: | |

Bidder:

Bidder's Address:

**TO BIDDER:**

You are notified that Owner has accepted your Bid dated [ March 10, 2021 ] for the above Contract, and that you are the Successful Bidder and are awarded a Contract for:

ITB #2021B-003 SCADA System Upgrade, Main Water Treatment Plant .

*[describe Work, alternates, or sections of Work awarded]*

The Contract Price of the awarded Contract is: $ 866,000 *[note if subject to unit prices, or cost-plus]*

[ ] unexecuted counterparts of the Agreement accompany this Notice of Award, and one copy of the Contract Documents accompanies this Notice of Award, or has been transmitted or made available to Bidder electronically. *[revise if multiple copies accompany the Notice of Award]* ☐ a set of the Drawings will be delivered separately from the other Contract Documents. You must comply with the following conditions precedent within 15 days of the date of this Notice of Award:

1. Deliver to Owner [____]counterparts of the Agreement, fully executed by Bidder.
2. Deliver with the executed Agreement(s) the Contract security *[e.g., performance and payment bonds]* and insurance documentation as specified in the Instructions to Bidders and General Conditions, Articles 2 and 6.
3. Other conditions precedent (if any):

Failure to comply with these conditions within the time specified will entitle Owner to consider you in default, annul this Notice of Award, and declare your Bid security forfeited.

Within ten days after you comply with the above conditions, Owner will return to you one fully executed counterpart of the Agreement, together with any additional copies of the Contract Documents as indicated in Paragraph 2.02 of the General Conditions.

---

Owner**:**

Authorized Signature

By:

Title:

# SECTION 00520
# AGREEMENT
# BETWEEN OWNER AND CONTRACTOR
# FOR CONSTRUCTION CONTRACT (STIPULATED PRICE)

THIS AGREEMENT is by and between Village of Palm Springs ("Owner") and Revere Control Systems, Inc. ("Contractor").

Owner and Contractor hereby agree as follows:

**ARTICLE 1 – WORK**

1.01 Contractor shall complete all Work as specified or indicated in the Contract Documents. The Work is generally described as follows: The Project consists of furnishing all labor, equipment and material for the SCADA System Improvements/Upgrade as described by the Drawings and Specifications. Generally, the work includes minor demolition, new control panels, modification to existing control panels, new computers/network equipment, software upgrades, electrical, site restoration and all other incidentals as indicated by the drawings and specifications or as required to properly complete the project as planned.

**ARTICLE 2 – THE PROJECT**

2.01 The Project, of which the Work under the Contract Documents is a part, is generally described as follows: **SCADA System Upgrade – Main Water Treatment Plant.**

**ARTICLE 3 – ENGINEER**

3.01 The part of the Project that pertains to the Work has been designed by Eckler Engineering, Inc.

3.02 The Owner has retained Eckler Engineering, Inc. ("Engineer") to act as Owner's representative, assume all duties and responsibilities, and have the rights and authority assigned to Engineer in the Contract Documents in connection with the completion of the Work in accordance with the Contract Documents.

**ARTICLE 4 – CONTRACT TIMES**

4.01 *Time of the Essence*

A. All time limits for Milestones, if any, Substantial Completion, and completion and readiness for final payment as stated in the Contract Documents are of the essence of the Contract.

4.02 *Contract Times: Days*

A. The Work will be substantially completed within 270 days after the date when the Contract Times commence to run as provided in Paragraph 4.01 of the General Conditions, and completed and ready for final payment in accordance with Paragraph 15.06 of the General Conditions within 300 days after the date when the Contract Times commence to run.

4.03 *Liquidated Damages*

A. Contractor and Owner recognize that time is of the essence as stated in Paragraph 4.01 above and that Owner will suffer financial and other losses if the Work is not completed

and Milestones not achieved within the times specified in Paragraph 4.02 above, plus any extensions thereof allowed in accordance with the Contract. The parties also recognize the delays, expense, and difficulties involved in proving in a legal or arbitration proceeding the actual loss suffered by Owner if the Work is not completed on time. Accordingly, instead of requiring any such proof, Owner and Contractor agree that as liquidated damages for delay (but not as a penalty):

1. Substantial Completion: Contractor shall pay Owner $500.00 for each day that expires after the time (as duly adjusted pursuant to the Contract) specified in Paragraph 4.02.A above for Substantial Completion until the Work is substantially complete.

2. Completion of Remaining Work: After Substantial Completion, if Contractor shall neglect, refuse, or fail to complete the remaining Work within the Contract Times (as duly adjusted pursuant to the Contract) for completion and readiness for final payment, Contractor shall pay Owner $500.00 for each day that expires after such time until the Work is completed and ready for final payment.

3. Liquidated damages for failing to timely attain Substantial Completion and final completion are not additive and will not be imposed concurrently.

4.04 *Special Damages*

A. In addition to the amount provided for liquidated damages, Contractor shall reimburse Owner (1) for any fines or penalties imposed on Owner as a direct result of the Contractor's failure to attain Substantial Completion according to the Contract Times.

**ARTICLE 5 – CONTRACT PRICE**

5.01 Owner shall pay Contractor for completion of the Work in accordance with the Contract Documents the amounts that follow, subject to adjustment under the Contract: A. For all Work other than Unit Price Work, a lump sum of: $ 866,000.00 .

All specific cash allowances are included in the above price in accordance with Paragraph 13.02 of the General Conditions.

B. For all Unit Price Work, an amount equal to the sum of the extended prices (established for each separately identified item of Unit Price Work by multiplying the unit price times the actual quantity of that item):

| Unit Price Work | | | | | |
|---|---|---|---|---|---|
| **Item No.** | **Description** | **Unit** | **Estimated Quantity** | **Unit Price** | **Extended Price** |
| | Not Applicable | | | | |
| | | | | | |
| | | | | | |
| | | | | | |
| | | | | | |
| Total of all Extended Prices for Unit Price Work (subject to final adjustment based on actual quantities) | | | | | $ N/A |

The extended prices for Unit Price Work set forth as of the Effective Date of the Contract are based on estimated quantities. As provided in Paragraph 13.03 of the General Conditions, estimated quantities are not guaranteed, and determinations of actual quantities and classifications are to be made by Engineer.

C. Total of Lump Sum Amount and Unit Price Work (subject to final Unit Price adjustment) $ 866,000.00 .

D. For all Work, at the prices stated in Contractor's Bid, attached hereto as an exhibit.

**ARTICLE 6 – PAYMENT PROCEDURES**

6.01 *Submittal and Processing of Payments*

A. Contractor shall submit Applications for Payment in accordance with Article 15 of the General Conditions. Applications for Payment will be processed by Engineer as provided in the General Conditions.

6.02 *Progress Payments; Retainage*

A. Owner shall make progress payments on account of the Contract Price on the basis of Contractor's Applications for Payment on or about the 20th day of each month during performance of the Work as provided in Paragraph 6.02.A.1 below, provided that such Applications for Payment have been submitted in a timely manner and otherwise meet the requirements of the Contract. All such payments will be measured by the Schedule of Values established as provided in the General Conditions (and in the case of Unit Price Work based on the number of units completed) or, in the event there is no Schedule of Values, as provided elsewhere in the Contract.

1. Prior to Substantial Completion, progress payments will be made in an amount equal to the percentage indicated below but, in each case, less the aggregate of payments previously made and less such amounts as Owner may withhold, including but not limited to liquidated damages, in accordance with the Contract

a. 90 percent of Work completed (with the balance being retainage). If the Work has been 50 percent completed as determined by Engineer, and if the character and progress of the Work have been satisfactory to Owner and Engineer, then as long

as the character and progress of the Work remain satisfactory to Owner and Engineer, the retainage will be reduced in accordance with Florida Statute 218.735; and

b. 90 percent of cost of materials and equipment not incorporated in the Work (with the balance being retainage).

B. Upon Substantial Completion, Owner shall pay an amount sufficient to increase total payments to Contractor to 100 percent of the Work completed, less such amounts set off by Owner pursuant to Paragraph 15.01.E of the General Conditions, and less 200 percent of Engineer's estimate of the value of Work to be completed or corrected as shown on the punch list of items to be completed or corrected prior to final payment.

6.03 *Final Payment*

A. Upon final completion and acceptance of the Work in accordance with Paragraph 15.06 of the General Conditions, Owner shall pay the remainder of the Contract Price as recommended by Engineer as provided in said Paragraph 15.06.

**ARTICLE 7 – INTEREST**

7.01 All amounts not paid when due shall bear interest at the rate of 0 percent per annum.

**ARTICLE 8 – CONTRACTOR'S REPRESENTATIONS**

8.01 In order to induce Owner to enter into this Contract, Contractor makes the following representations:

A. Contractor has examined and carefully studied the Contract Documents, and any data and reference items identified in the Contract Documents.

B. Contractor has visited the Site, conducted a thorough, alert visual examination of the Site and adjacent areas, and become familiar with and is satisfied as to the general, local, and Site conditions that may affect cost, progress, and performance of the Work.

C. Contractor is familiar with and is satisfied as to all Laws and Regulations that may affect cost, progress, and performance of the Work.

D. Contractor has carefully studied all: (1) reports of explorations and tests of subsurface conditions at or adjacent to the Site and all drawings of physical conditions relating to existing surface or subsurface structures at the Site that have been identified in the Supplementary Conditions, especially with respect to Technical Data in such reports and drawings, and (2) reports and drawings relating to Hazardous Environmental Conditions, if any, at or adjacent to the Site that have been identified in the Supplementary Conditions, especially with respect to Technical Data in such reports and drawings.

E. Contractor has considered the information known to Contractor itself; information commonly known to contractors doing business in the locality of the Site; information and observations obtained from visits to the Site; the Contract Documents; and the Site-related reports and drawings identified in the Contract Documents, with respect to the effect of such information, observations, and documents on (1) the cost, progress, and performance of the Work; (2) the means, methods, techniques, sequences, and procedures of construction to be employed by Contractor; and (3) Contractor's safety precautions and programs.

F. Based on the information and observations referred to in the preceding paragraph, Contractor agrees that no further examinations, investigations, explorations, tests, studies, or data are necessary for the performance of the Work at the Contract Price, within the Contract Times, and in accordance with the other terms and conditions of the Contract.

G. Contractor is aware of the general nature of work to be performed by Owner and others at the Site that relates to the Work as indicated in the Contract Documents.

H. Contractor has given Engineer written notice of all conflicts, errors, ambiguities, or discrepancies that Contractor has discovered in the Contract Documents, and the written resolution thereof by Engineer is acceptable to Contractor.

I. The Contract Documents are generally sufficient to indicate and convey understanding of all terms and conditions for performance and furnishing of the Work.

J. Contractor's entry into this Contract constitutes an incontrovertible representation by Contractor that without exception all prices in the Agreement are premised upon performing and furnishing the Work required by the Contract Documents.

**ARTICLE 9 – CONTRACT DOCUMENTS**

9.01 *Contents*

A. The Contract Documents consist of the following:

1. This Agreement (pages 1 to ___, inclusive).
2. Performance bond (pages ___ to ___, inclusive).
3. Payment bond (pages ___ to ___, inclusive).
4. Other bonds.
   a. ___ (pages ___ to ___, inclusive).
   b. ___ (pages ___ to ___, inclusive).
   c. ___ (pages ___ to ___, inclusive).
5. General Conditions (pages ___ to ___, inclusive).
6. Supplementary Conditions (pages ___ to ___, inclusive).
7. Specifications as listed in the table of contents of the Project Manual.
8. Drawings (not attached but incorporated by reference) consisting of ___ sheets with each sheet bearing the following general title: ___ **[or]** the Drawings listed on the attached sheet index.
9. Addenda (numbers ___ to ___, inclusive).
10. Exhibits to this Agreement (enumerated as follows):
    a. Contractor's Bid (pages ___ to ___, inclusive).
11. The following which may be delivered or issued on or after the Effective Date of the Contract and are not attached hereto:
    a. Notice to Proceed.

b. Work Change Directives.

c. Change Orders.

d. Field Orders.

B. The documents listed in Paragraph 9.01.A are attached to this Agreement (except as expressly noted otherwise above).

C. There are no Contract Documents other than those listed above in this Article 9.

D. The Contract Documents may only be amended, modified, or supplemented as provided in the General Conditions.

E. To the extent that there exists a conflict between this Agreement and the remaining Contract Documents, the terms, conditions, covenants, and/or provisions of this Agreement shall prevail. Wherever possible, the provisions of such documents shall be construed in such a manner as to avoid conflicts between provisions of the various documents.

**ARTICLE 10 – MISCELLANEOUS**

10.01 *Terms*

A. Terms used in this Agreement will have the meanings stated in the General Conditions and the Supplementary Conditions.

10.02 *Assignment of Contract*

A. Unless expressly agreed to elsewhere in the Contract, no assignment by a party hereto of any rights under or interests in the Contract will be binding on another party hereto without the written consent of the party sought to be bound; and, specifically but without limitation, money that may become due and money that is due may not be assigned without such consent (except to the extent that the effect of this restriction may be limited by law), and unless specifically stated to the contrary in any written consent to an assignment, no assignment will release or discharge the assignor from any duty or responsibility under the Contract Documents.

10.03 *Successors and Assigns*

A. Owner and Contractor each binds itself, its successors, assigns, and legal representatives to the other party hereto, its successors, assigns, and legal representatives in respect to all covenants, agreements, and obligations contained in the Contract Documents.

10.04 *Severability*

A. Any provision or part of the Contract Documents held to be void or unenforceable under any Law or Regulation shall be deemed stricken, and all remaining provisions shall continue to be valid and binding upon Owner and Contractor, who agree that the Contract Documents shall be reformed to replace such stricken provision or part thereof with a valid and enforceable provision that comes as close as possible to expressing the intention of the stricken provision.

10.05 *Contractor's Certifications*

A. Contractor certifies that it has not engaged in corrupt, fraudulent, collusive, or coercive practices in competing for or in executing the Contract. For the purposes of this Paragraph 10.05:

1. "corrupt practice" means the offering, giving, receiving, or soliciting of any thing of value likely to influence the action of a public official in the bidding process or in the Contract execution;

2. "fraudulent practice" means an intentional misrepresentation of facts made (a) to influence the bidding process or the execution of the Contract to the detriment of Owner, (b) to establish Bid or Contract prices at artificial non-competitive levels, or (c) to deprive Owner of the benefits of free and open competition;

3. "collusive practice" means a scheme or arrangement between two or more Bidders, with or without the knowledge of Owner, a purpose of which is to establish Bid prices at artificial, non-competitive levels; and

4. "coercive practice" means harming or threatening to harm, directly or indirectly, persons or their property to influence their participation in the bidding process or affect the execution of the Contract.

10.06 *Indemnity*

A. The parties recognize that the CONTRACTOR is an independent contractor. The CONTRACTOR agrees to assume liability for and indemnify, hold harmless, and defend the VILLAGE, its council members, mayor, officers, employees, agents, and attorneys of, from, and against all liability and expense, including reasonable attorney's fees, in connection with any and all claims, demands, damages, actions, causes of action, and suits in equity of whatever kind or nature, including claims for personal injury, property damage, equitable relief, or loss of use, to the extent caused by the negligence, recklessness, or intentionally wrongful conduct of the CONTRACTOR, its agents, officers, Contractors, subcontractors, employees, or anyone else utilized by the CONTRACTOR in the performance of this Contract. The CONTRACTOR's liability hereunder shall include all attorney's fees and costs incurred by the VILLAGE in the enforcement of this indemnification provision. This includes claims made by the employees of the CONTRACTOR against the VILLAGE and the CONTRACTOR hereby waives its entitlement, if any, to immunity under Section 440.11, Florida Statutes. The obligations contained in this provision shall survive termination of this Contract and shall not be limited by the amount of any insurance required to be obtained or maintained under this Contract.

B. Subject to the limitations set forth in this Section, CONTRACTOR shall assume control of the defense of any claim asserted by a third party against the VILLAGE and, in connection with such defense, shall appoint lead counsel, in each case at the CONTRACTOR's expense. The VILLAGE shall have the right, at its option, to participate in the defense of any third party claim, without relieving CONTRACTOR of any of its obligations hereunder. If the CONTRACTOR assumes control of the defense of any third party claim in accordance with this paragraph, the CONTRACTOR shall obtain the prior written consent of the VILLAGE before entering into any settlement of such claim. Notwithstanding anything to the contrary in this Section, the CONTRACTOR shall not assume or maintain control of the defense of any third party claim, but shall pay the fees of counsel retained by the VILLAGE and all expenses, including experts' fees, if (i) an adverse determination with respect to the third party claim would, in the good faith judgment of the VILLAGE, be detrimental in any material respect to

the VILLAGE's reputation; (ii) the third party claim seeks an injunction or equitable relief against the VILLAGE; or (iii) the CONTRACTOR has failed or is failing to prosecute or defend vigorously the third party claim. Each party shall cooperate, and cause its agents to cooperate, in the defense or prosecution of any third party claim and shall furnish or cause to be furnished such records and information, and attend such conferences, discovery proceedings, hearings, trials, or appeals, as may be reasonably requested in connection therewith.

C. It is the specific intent of the parties hereto that the foregoing indemnification complies with Section 725.06, Florida Statutes, as amended. CONTRACTOR expressly agrees that it will not claim, and waives any claim, that this indemnification violates Section 725.06, Florida Statues. Nothing contained in the foregoing indemnification shall be construed as a waiver of any immunity or limitation of liability the VILLAGE may have under the doctrine of sovereign immunity or Section 768.28, Florida Statutes.

10.07 *Governing Law and Remedies*

A. The validity of this Agreement and of any of its terms or provisions, as well as the rights and duties of the parties hereunder, shall be governed by the laws of the State of Florida and venue for any and all disputes related to or arising from this Agreement shall be in Palm Beach County, Florida.

B. No remedy herein conferred upon any party is intended to be exclusive of any other remedy, and each and every such remedy shall be cumulative and shall be in addition to every other remedy given hereunder or now or hereafter existing at law or in equity or by statute or otherwise. No single or partial exercise by any party of any right, power, or remedy hereunder shall preclude any other or further exercise thereof.

10.08 *Office of the Inspector General*

A. Palm Beach County has established the Office of the Inspector General, which is authorized and empowered to review past, present, and proposed County programs, contracts, transactions, accounts and records. The Inspector General (IG) has the power to subpoena witnesses, administer oaths, require the production of records, and monitor existing projects and programs. The Inspector General may, on a random basis, perform audits on all Village contracts.

10.09. *Scrutinized Companies*

Company certifies that it and its subcontractors are not on the Scrutinized Companies that Boycott Israel List and are not engaged in the boycott of Israel. Pursuant to section 287.135, Florida Statutes, the Village may immediately terminate this Agreement at its sole option if the Company or any of its subcontractors are found to have submitted a false certification; or if the Company or any of its subcontractors, are placed on the Scrutinized Companies that Boycott Israel List or is engaged in the boycott of Israel during the term of this Agreement.

The Company agrees to observe the above requirements for applicable subcontracts entered into for the performance of work under this Agreement. The Company agrees that the certifications in this section shall be effective and relied upon by the Village for the term of this Agreement, including any and all renewals. The Company agrees that if it or any of its subcontractors' status changes in regards to any certification herein, the Company shall immediately notify the Village of the same. As provided in Subsection 287.135(8), Florida

Statutes, if federal law ceases to authorize the above-stated contracting prohibitions then they shall become inoperative.

10.10 *Public Records*

A. The CONTRACTOR shall comply with Florida's Public Records Laws, Chapter 119, Florida Statutes, and, if it is acting on behalf of the VILLAGE as provided under section 119.011(2), the CONTRACTOR specifically agrees to:

1. Keep and maintain public records required by the VILLAGE to perform the services under this Agreement.

2. Upon request from the VILLAGE's custodian of public records, provide the VILLAGE with a copy of the requested records or allow the records to be inspected or copied within a reasonable tie at a cost that does not exceed the cost provided in this Chapter 119, Florida Statutes, or as otherwise provided by law.

3. Ensure that said public records that are exempt or confidential and exempt from public records disclosure requirements are not disclosed except as authorized by law for the duration of the Agreement term and following completion of the Agreement, if the CONTRACTOR does not transfer the records to the VILLAGE.

4. Upon the completion of the Agreement, transfer, at no cost, to the VILLAGE all public records in possession of the CONTRACTOR or keep and maintain public records required by the VILLAGE to perform the services. If the CONTRACTOR transfers all public records to the VILLAGE upon completion of the Agreement, the CONTRACTOR shall destroy any duplicate public records that are exempt or confidential and exempt from public records disclosure requirements. If the CONTRACTOR keeps and maintains public records upon completion of the Agreement, the CONTRACTOR shall meet all applicable requirements for retaining public records. All records stored electronically must be provided to the VILLAGE, upon request from the VILLAGE's custodian of public records, in a format that is compatible with the information technology systems of the Village.

IF THE COMPANY HAS QUESTIONS REGARDING THE APPLICATION OF CHAPTER 119, FLORIDA STATUTES, TO THE COMPANY'S DUTY TO PROVIDE PUBLIC RECORDS RELATING TO THIS CONTRACT, CONTACT THE CUSTODIAN OF PUBLIC RECORDS OR DESIGNEE AT: ATTENTION KIMBERYLY WYNN, VILLAGE CLERK 561-434-5084, kwynn@vpsfl.org, OR BY MAIL AT VILLAGE OF PALM SPRINGS, 226 CYPRESS LANE, PALM SPRINGS, FL 33461.

10.11 *E-VERIFY*

Pursuant to Section 448.095(2), Florida Statutes, beginning on January 1, 2021, the Company shall:

1. Register with and use the E-Verify system to verify the work authorization status of all newly hired employees and require all subcontractors (providing services or receiving funding under this Agreement) to register with and use the E-Verify system to verify the work authorization status of all the subcontractors' newly hired employees;

~~1.~~2. Secure an affidavit from all subcontractors (providing services or receiving funding under this Agreement) stating that the subcontractor does not employ, contract with, or subcontract with an unauthorized alien;

~~2.~~3. Maintain copies of all subcontractor affidavits for the duration of this Agreement;

~~3.~~4. Comply fully, and ensure all of its subcontractors comply fully, with Section 448.095, Florida Statutes;

~~4.~~5. Be aware that a violation of Section 448.09, Florida Statutes (Unauthorized aliens; employment prohibited) shall be grounds for termination of this Agreement; and

~~5.~~6. Be aware that if the Village terminates this Agreement under Section 448.095(2)(c), Florida Statutes, the Company may not be awarded a public contract for at least 1 year after the date on which the Agreement is terminated and will be liable for any additional costs incurred by the Village as a result of the termination of the Agreement.

10.11 *Insurance*

A. The limits of liability for insurance required by Paragraph 6.03 of the General Conditions shall provide coverage for not less that the following amounts or greater where required by Law and Regulations:

1. Workers' Compensation, and related coverages under Paragraphs 6.03.A.1 and A.2 of the General Conditions:

| | | |
|---|---|---|
| a. | State | Statutory |
| b. | Applicable Federal | Statutory |
| c. | Employer Liability: | |
| | Bodily injury, each accident | $1,000,000 Bodily |
| | injury by disease, each employee | $500,000 |
| | Bodily injury/disease aggregate | $1,000,000 |
| | Foreign voluntary worker compensation | Statutory |

2. Contractor's Commercial General Liability under Paragraphs 6.03.B and 6.03.C of the General Conditions:

| | | |
|---|---|---|
| a. | General Aggregate | $2,000,000 |
| b. | Products – Completed Operations Aggregate | $2,000,000 |
| c. | Personal and Advertising Injury | $1,000,000 |
| d. | Each Occurrence (Bodily Injury and Property Damage) | $1,000,000 |

3. Automobile Liability under paragraph 6.03.D of the General Conditions:

| | | |
|---|---|---|
| a. | Bodily Injury: | |
| | Each Person | $500,000 |
| | Each Accident | $1,000,000 |
| b. | Property Damage: | |
| | Each Incident | $1,000,000 |

4. Umbrella of Excess Liability under paragraph 6.03.E of the General Conditions:

a. Excess or Umbrella Liability
   1) General Aggregate $5,000,000
   2) Each Occurrence $1,000,000

5. Contractor's Pollution Liability under paragraph 6.03.F of the General Conditions:

   a. Contractor's Pollution Liability
      1) General Aggregate $2,000,000
      2) Each Occurrence $1,000,000

6. Additional Insureds include the respective officers, partners, directors, employees, agents, consultants, and subconsultants of the following firms and municipal government(s):

   a. Village of Palm Springs

10.12 *Public Construction Bond*

A. If the contract amount exceeds $200,000 in total construction cost, the CONTRACTOR must provide the VILLAGE with a public construction bond in accordance with section 255.05, Florida Statutes. Said bond must be recorded in the Official Records in and for Palm Beach County and a copy of the recorded bond must be provided to the VILLAGE prior to the CONTRACTOR providing any services under the contract. The VILLAGE reserves the right to request a bond for any work which is less than $200,000. The cost of the bond shall be a direct pass through cost to the VILLAGE without any mark-up by the CONTRACTOR.

B. The public construction bond shall be on forms attached hereto as **Exhibit "B"** or substantially similar as approved by the VILLAGE. The bond shall be in an amount not less than the total contract price and shall incorporate by reference the terms of the Contract Documents in their entirety.

C. To be acceptable to the VILLAGE, a Surety Company shall comply with the following provisions:

(a) The Surety Company shall have a currently valid Certificate of Authority, issued by the State of Florida Department of Insurance, authorizing it to write surety bonds in the State of Florida.

(b) The Surety Company shall have a currently valid Certificate of Authority issued by the United States Department of Treasury under Sections 9304 to 9308 of Title 31 of the United States Code.

(c) The Surety Company shall be in full compliance with the provisions of the Florida Insurance Code.

(d) The Surety Company shall have at least twice the minimum surplus and capital required by the Florida Insurance Code at the time the contract is approved.

(e) The Surety Company shall have at least the ratings of A-/Class V in the latest issue of Best's Key Rating Guide.

(f) The Surety Company shall not expose itself to any loss on any one risk in an amount exceeding ten (10) percent of its surplus to policyholders, provided:

1. Any risk or portion of any risk being reinsured shall be deducted in determining the limitation of the risk as prescribed in this section. These minimum requirements shall apply to

the reinsuring carrier providing authorization or approval by the State of Florida, Department of Insurance to do business in this state have been met.

2. In the case of the surety insurance company, in addition to the deduction for reinsurance, the amount assumed by any co-surety, the value of any security deposited, pledged or held subject to the consent of the surety and for the protection of the surety shall be deducted.

10.13 *Audit By Village*

A. The CONTRACTOR shall maintain adequate records to justify all charges, expenses, and costs incurred in estimating and performing the Services for at least three (3) years after completion of the Contract. The CONTRACTOR shall permit the VILLAGE, or any authorized representatives of the VILLAGE, at all reasonable times, access to and the right to examine all records, books, papers or documents related to the CONTRACTOR's performance under this Agreement including, but not limited to, expenses for sub-contractors, agents or assistants, direct and indirect charges for work performed and detailed documentation for all such work performed or to be performed under this Agreement.

10.14 *Copies of Data/Documents*

A. Copies or original documents prepared by the CONTRACTOR in relation to work associated with this Agreement shall be provided to the VILLAGE. Data collected, stored, and/or provided shall be in a form acceptable to the VILLAGE and agreed upon by the VILLAGE.

10.15 *Ownership*

A. Each and every report, draft, work product, map, record, and other document reproduced, prepared, or caused to be prepared by the CONTRACTOR pursuant to or in connection with this Agreement shall be the exclusive property of the VILLAGE.

10.16 *Limitations of Liability*

A. Under no circumstances shall either party be liable to the other for any consequential, incidental, special, punitive, or any other form of indirect or non-compensatory damages.

10.17 *Enforcement Costs*

A. All parties shall be responsible for their own attorneys' fees, court costs and expenses if any legal action or other proceeding is brought for any dispute, disagreement, or issue of construction or interpretation arising hereunder whether relating to the Agreement's execution, validity, the obligations provided therein, or performance of this Agreement, or because of an alleged breach, default or misrepresentation in connection with any provisions of this Agreement.

10.18 *Copyrights and/or Patent Rights*

A. CONTRACTOR warrants that there has been no violation of copyrights and/or patent rights in the manufacturing, producing or selling of the goods, shipped or ordered, as a result of this Agreement and the CONTRACTOR agrees to hold the Village harmless from any and all liability, loss, or expense occasioned by any such violation.

10.19 *Protection of Property*

A. The CONTRACTOR shall at all times guard against damage or loss to the property of the VILLAGE or of other vendors or contractors and shall be held responsible for replacing or repairing any such loss or damage. The VILLAGE may withhold payment or make such deductions as deemed necessary to insure reimbursement or replacement for loss or damage to property through negligence of the successful CONTRACTOR or its agents. The CONTRACTOR shall be responsible to safeguard all of their property such as tools and equipment while on site. The VILLAGE will not be held responsible for any loss of CONTRACTOR property due to theft or vandalism.

10.20 *Damage to Persons or Property*

A. The responsibility for all damage to person or property arising out of or on account of Scope of Work done under this Contract shall rest upon the CONTRACTOR.

10.21 *Discrimination*

A. The CONTRACTOR warrants and represents that all of its employees are treated equally during employment without regard to race, color, religion, disability, sex, age, national origin, ancestry, political affiliation, marital status, handicap, or sexual orientation. Further, CONTRACTOR shall not discriminate or permit discrimination against any employee or an applicant for employment on the basis of race, color, sex, religion, political affiliation, natural origin, ancestry, marital status, sexual orientation or handicap.

10.22 *Construction Defects*

A. PURSUANT TO SECTION 558.005, FLORIDA STATUTES, ANY CLAIMS FOR CONSTRUCTION DEFECTS ARE NOT SUBJECT TO THE NOTICE AND CURE PROVISIONS OF CHAPTER 558, FLORIDA STATUTES.

IN WITNESS WHEREOF, Owner and Contractor have signed this Agreement.

This Agreement will be effective on _____ (which is the Effective Date of the Contract).

| VILLAGE: | CONTRACTOR: |
|---|---|
| By: _____ | By: _____ |
| Title: Mayor _____ | Title: _____ |
| | *(Seal)* |
| Attest: _____ | Attest: _____ |
| Title: Village Clerk _____ | Title: Notary Public _____ |

Approved as to Form:

Title: Village Attorney

Address for giving notices:

226 Cypress Lane

Palm Springs FL, 33461

Address for giving notices:

License No.: _____
*(where applicable)*

ECKLER ENGINEERING, INC.

March 29, 2021
400-077.01

Mr. Paul Ward
Village of Palm Springs
226 Cypress Lane
Lake Worth, FL 33461

Dear Mr. Ward:

Reference: Recommendation of Award
Bid No. 2021B-003
SCADA System Upgrades, Main Water Treatment Plant

The Village of Palm Springs received, opened, and read aloud bids for the SCADA System Upgrades, Main Water Treatment Plant on Wednesday, March 10, 2021 at 2:00 P.M. Four (4) bids were received ranging in price from $866,000.00 to $1,087,600.00. The apparent low bid was submitted by Revere Control Systems, Inc., of Birmingham, AL.

The bid packages were reviewed and evaluated per the requirements of the bid documents as follows:

Revere Control Systems, Inc.

The bid package submitted by the apparent low bidder was reviewed first. Per our review and evaluation, we noted the following items as incomplete or not provided in accordance with the bid documents:

1. All required documents and attachments were provided in accordance with the requirements of the bid documents.

Based on the above determination of bid responsiveness, we continued the evaluation process of the bidder's qualifications and experience. Revere Control Systems, Inc., has successfully completed numerous projects similar to the bid scope for many different municipal water and wastewater treatment facilities. Based on submitted past performance references and our knowledge of their capabilities, they are qualified to complete this project per the bid drawings and specifications.

**Based on the above evaluation, we recommend the Village award of this construction contract to Revere Control Systems, Inc., in the amount of $866,000.00.** We find this recommended amount to be approximately 6% above the Engineer's final opinion of probable construction cost of $816,000.

A certified bid tabulation has been attached. The bid tabulation lists the documents that were required to be submitted by the bidder with the bid proposal. An "X" indicates that the necessary documents were submitted and found to be in compliance with the requirements of the bidding phase of this project.

If you have any questions or require additional information pertaining to this recommendation of award or the project in general, please do not hesitate to contact me.

Sincerely,

Douglas K. Hammann, P.E.

Encl.
Y:\Documents\Village\400-077.01 SCADA System Upgrades\Bid Evaluation and Recommendation of Award\Bid Evaluations\Recommendation of Award.wpd



4700 RIVERSIDE DRIVE, SUITE 110
CORAL SPRINGS, FL 33067
954/510-4700
FAX 954/755-2741

**BID TABULATION**
**SCADA SYSTEM UPGRADES MAIN WATER TREATMENT PLANT**
**VILLAGE OF PALM SPRINGS**
**BID NO. 2021B-003**

Bid Opening Date: March 10, 2021 Time: 2:00 P.M.

| Bidder | 00400 | 00410 | 00430 | 00431 | 00440 | 00451 | 00452 | 00453 | 00454 | 00455 | 00456 | Qualification | Insurance | Addenda 1,2,3 | Bid Amount |
|---|---|---|---|---|---|---|---|---|---|---|---|---|---|---|---|
| Revere Control Systems, Inc Birmingham, AL | X | X | X | X | X | X | X | X | X | X | X | X | X | X | $866,000.00 |
| Curry Controls Company Lakeland, FL | X | X | X | X | X | X | X | X | X | X | X | X | X | I | $943,260.00 |
| Boromei Construction, Inc. Okeechobee, FL | X | X | X | X | X | X | X | X | X | X | X | X | X | X | $974,756.00 |
| TLC Diversified, Inc. Palmetto, FL | X | X | X | X | X | X | NR | X | X | X | X | X | X | X | $1,087,600 |

Notes:

1. Abbreviations:
   X = Necessary documents were submitted NR = Not Received I = Incomplete N/A = Not Applicable - = Not Reviewed

2. Curry Controls Bid Package did not acknowledge Addendum No. 3.

3. TLC Diversified, inc. Bid Package did not include Section 00452 – Disputes.

This is to certify that this is a true and correct representation of the bids received, opened, and read aloud at 2:00 P.M. on Wednesday, March 10, 2021.

Douglas Hammann, P.E.

**SECTION 00400**

**BID SUBMISSION CHECKLIST**

Project Name: **SCADA SYSTEM UPGRADE, MAIN WATER TREATMENT PLANT**

Bid Number: **2021B-003**

Bidder=s Name: Revere Control Systems, Inc.

The following items must be submitted in the following order with your bid:

1. 9 Completed Section 00400 - Bid Submission Checklist.

2. 9 Completed Section 00410 - Bid Form.

3. 9 Completed Section 00430 - Bid Bond, complete with Power of Attorney.

4. 9 Completed Section 00431 – Tabulation of Subcontractors and Suppliers.

5. 9 Completed Section 00440 – Florida Trench Safety Act Certification.

6. 9 Completed Section 00451 –Qualifications Statement.

7. 9 Completed Section 00452 – Bidder's Statement of Disputes, Litigation, Arbitration, and Surety Completion – Last Three (3) Years

8. 9 Completed Section 00453 - Non-Collusive Affidavit.

9. 9 Completed Section 00454 - Drug-Free Workplace.

10. 9 Completed Section 00455 - Public Entity Crimes.

11. 9 Completed Section 00456 - Scrutinized Companies Certification Form.

12. 9 Provide requested bidder qualification information per Section 00200 - Instructions to Bidders, Articles 3.1, 3.2, 3.3, and 3.4.

13. 9 Current insurance certificate showing that bidder can meet the insurance requirements per Specification Section 00815 - Supplementary Conditions, Article SC-5.04 and SC-5.06, A.

14. 9 Signed copy of all Addenda.

Submit one (1) original and two (2) copies of all documents listed above. Original shall be clearly marked Original.

Failure to provide the above listed items may result in your bid being deemed non-responsive.

# SECTION 00410

# BID FORM

## ARTICLE 1 – BID RECIPIENT

1.01 This Bid is submitted to:

**Village of Palm Springs**
**226 Cypress Lane**
**Palm Springs, FL 33461**

1.02 The undersigned Bidder proposes and agrees, if this Bid is accepted, to enter into an Agreement with Owner in the form included in the Bidding Documents to perform all Work as specified or indicated in the Bidding Documents for the prices and within the times indicated in this Bid and in accordance with the other terms and conditions of the Bidding Documents.

## ARTICLE 2 – BIDDER'S ACKNOWLEDGEMENTS

2.01 Bidder accepts all of the terms and conditions of the Instructions to Bidders, including without limitation those dealing with the disposition of Bid security. This Bid will remain subject to acceptance for 120 days after the Bid opening, or for such longer period of time that Bidder may agree to in writing upon request of Owner.

## ARTICLE 3 – BIDDER'S REPRESENTATIONS

3.01 In submitting this Bid, Bidder represents that:

A. Bidder has examined and carefully studied the Bidding Documents, and any data and reference items identified in the Bidding Documents, and hereby acknowledges receipt of the following Addenda:

| Addendum No. | Addendum, Date |
|---|---|
| Addendum 01 | February 01, 2021 |
| Addendum 02 | February 16, 2021 |
| Addendum 03 | March 8, 2021 |
| | |

B. Bidder has visited the Site, conducted a thorough, alert visual examination of the Site and adjacent areas, and become familiar with and satisfied itself as to the general, local, and Site conditions that may affect cost, progress, and performance of the Work.

C. Bidder is familiar with and has satisfied itself as to all Laws and Regulations that may affect cost, progress, and performance of the Work.

D. Not used.

E. Bidder has considered the information known to Bidder itself; information commonly known to contractors doing business in the locality of the Site; information and observations obtained from visits to the Site; the Bidding Documents; and any Site-related reports and drawings identified in the Bidding Documents, with respect to the effect of such information, observations, and documents on (1) the cost, progress, and

performance of the Work; (2) the means, methods, techniques, sequences, and procedures of construction to be employed by Bidder; and (3) Bidder's safety precautions and programs.

F. Bidder agrees, based on the information and observations referred to in the preceding paragraph, that no further examinations, investigations, explorations, tests, studies, or data are necessary for the determination of this Bid for performance of the Work at the price bid and within the times required, and in accordance with the other terms and conditions of the Bidding Documents.

G. Bidder is aware of the general nature of work to be performed by Owner and others at the Site that relates to the Work as indicated in the Bidding Documents.

H. Bidder has given Engineer written notice of all conflicts, errors, ambiguities, or discrepancies that Bidder has discovered in the Bidding Documents, and confirms that the written resolution thereof by Engineer is acceptable to Bidder.

I. The Bidding Documents are generally sufficient to indicate and convey understanding of all terms and conditions for the performance and furnishing of the Work.

J. The submission of this Bid constitutes an incontrovertible representation by Bidder that Bidder has complied with every requirement of this Article, and that without exception the Bid and all prices in the Bid are premised upon performing and furnishing the Work required by the Bidding Documents.

**ARTICLE 4 – BIDDER'S CERTIFICATION**

4.01 Bidder certifies that:

A. This Bid is genuine and not made in the interest of or on behalf of any undisclosed individual or entity and is not submitted in conformity with any collusive agreement or rules of any group, association, organization, or corporation;

B. Bidder has not directly or indirectly induced or solicited any other Bidder to submit a false or sham Bid;

C. Bidder has not solicited or induced any individual or entity to refrain from bidding; and

D. Bidder has not engaged in corrupt, fraudulent, collusive, or coercive practices in competing for the Contract. For the purposes of this Paragraph 4.01.D:

1. "corrupt practice" means the offering, giving, receiving, or soliciting of any thing of value likely to influence the action of a public official in the bidding process;

2. "fraudulent practice" means an intentional misrepresentation of facts made (a) to influence the bidding process to the detriment of Owner, (b) to establish bid prices at artificial non-competitive levels, or (c) to deprive Owner of the benefits of free and open competition;

3. "collusive practice" means a scheme or arrangement between two or more Bidders, with or without the knowledge of Owner, a purpose of which is to establish bid prices at artificial, non-competitive levels; and

4. "coercive practice" means harming or threatening to harm, directly or indirectly, persons or their property to influence their participation in the bidding process or affect the e execution of the Contract.

**ARTICLE 5 – BASIS OF BID**

5.01 Bidder will complete the Work in accordance with the Contract Documents for the following price(s):

| | |
|---|---|
| Lump Sum Bid Price | $ 816,000.00 |
| Lump Sum Contingency Allowance (Section 01010, 1.05) | $ 50,000.00 |

**Total of Lump Sum Price** $ 866,000.00

Eight Hundred Sixty-Six Thousand and 00/100 Dollars

(written)

**ARTICLE 6 – TIME OF COMPLETION**

6.01 Bidder agrees that the Work will be substantially complete within 270 calendar days after the date when the Contract Times commence to run as provided in Paragraph 4.01 of the General Conditions, and will be completed and ready for final payment in accordance with Paragraph 15.06 of the General Conditions within 300 calendar days after the date when the Contract Times commence to run.

6.02 Bidder accepts the provisions of the Agreement as to liquidated damages.

**ARTICLE 7 – ATTACHMENTS TO THIS BID**

7.01 The following documents are submitted with and made a condition of this Bid:

A. Required Bid security;

B. List of Proposed Subcontractors;

C. List of Proposed Suppliers;

D. List of Project References;

E. Evidence of authority to do business in the state of the Project;

F. Contractor's License Number;

G. Required Bidder Qualification Statement with supporting data; and

H. Documentation per Section 00200 – Instructions to bidders, page 8, Article 15.04.

**ARTICLE 8 – DEFINED TERMS**

8.01 The terms used in this Bid with initial capital letters have the meanings stated in the Instructions to Bidders, the General Conditions, and the Supplementary Conditions.

**ARTICLE 9 – BID SUBMITTAL**

BIDDER: *[Indicate correct name of bidding entity]*

Revere Control Systems, Inc.

By:
*[Signature]* Nan Johnson

*[Printed name]* Nan Johnson, Vice President of Municipal Systems

*(If Bidder is a corporation, a limited liability company, a partnership, or a joint venture, attach evidence of authority to sign.)*

Attest:
*[Signature]* Missy Stewart

*[Printed name]* Missy Stewart

Title: Operations Manager

Submittal Date: 3/10/2021

Address for giving notices:

2240 Rocky Ridge Road

Birmingham, AL 35216

Telephone Number: (205) 824-0004

Fax Number: (205) 824-0408

Contact Name and e-mail address: Nan Johnson / njohnson@reverecontrol.com

Jean Mead / jmead@reverecontrol.com

Bidder's License No.: State of Florida: General Contractor License GC1526173 / Professional Engineering CA8769

*(where applicable)* Certificate of Status F96000006332

*NOTE TO USER: Use in those states or other jurisdictions where applicable or required.*

REVERE

**PROPOSAL FOR**

# SCADA SYSTEM UPGRADE MAIN WTP

VILLAGE OF PALM SPRINGS

**QUOTE NUMBER: 44336**
**QUOTE DATE: 3/10/2021**

## TABLE OF CONTENTS


A. Introduction ..... 2
B. Project Scope ..... 2
1. Management ..... x
2. Engineering Package / Submittals ..... x
3. Programming / Software Configuration ..... x
4. PLC Control Panels ..... x
5. Local Control Panels ..... x
6. Field Equipment ..... x
7. Computer / Software / Network & Communications ..... x
8. On-Site Services ..... x
9. Special Services ..... x
10. Project Close Out ..... x
11. Project Pricing and Timelines ..... x
12. Warranty ..... x

## A. Introduction

Thank you for the opportunity to present our proposal for the referenced project. We will furnish instrumentation equipment and PLC Panels programmed as an integrated system and maintain system responsibility for the functional operation as defined in the specifications. Your project deserves the most reliable equipment and best possible cost-performance ratio available for this application, and we will deliver such a system to you while still meeting all the functional requirements of the specifications.

Revere is an ideal match for your SCADA System Upgrade Main WTP project. We will deliver the kind of value you expect and deserve on this project for the following reasons:

- We are a certified Solution Provider for Rockwell Automation products and software, assuring that your system will enjoy the highest level of expertise available in implementing the system design.)
- Revere Control Systems (RCS) is an Advanced Certified VTScada System Integrator

We look forward to serving you and to delivering a system that will give you many years of valuable service.

## B. Project Scope

Drawings and Specifications by: Eckler Engineering

### Specifications

| Section | Description |
|---|---|
| 13700 | Process Instrumentation and Controls |
| 13710 | Programmable Logic Controller |
| 13711 | Existing SCADA System Modifications |
| 13712 | Local HMI System Development |
| 13725 | Loop Functions/Programming Strategies/Protocol |
| 13750 | SCADA System Software |
| 13751 | RTU Subsystem |
| 13752 | Computers and Accessories |
| 13753 | Operator Consoles and Accessories |
| 13759 | Modifications to Existing Field panels, MCC's and PLCs |
| | |

**Addenda:** 1, 2, 3

## 1. Management

**A. Project Management**
Project Coordination and Scheduling

**B. Project Meetings**:
- One (1) Pre-construction Conference
- Nine (9) Progress Meetings
- One (1) Pre-installation Conference

## 2. Engineering Documentation Packages

**A. Documentation Packages**
- Field Instrumentation Submittal with Manufacturer Cutsheets
- Control Panel Hardware and Drawings Submittal
- Software Submittal including HMI Graphics and Functional Control Strategies
- Computer and Network Hardware/Software Submittal
- Factory and Field Test Plan Submittal
- Training Plan Submittal
- Fiber Optic Submittal
- ISA S5.4 Loop Diagrams Submittal
- Operations & Maintenance Manuals

## 3. Programming / Software Configuration

**A. PLC Programming**
- PLC programming

**B. OIT Programming**
- Not Provided – Panel Mounted Operator Terminals are View Nodes to the Plant HMI Application

**C. HMI Programming/Configuration**
- VTScada HMI Application including Database, Graphics, Historical Data, Trending
- Two (2) Data Reports per Owner's Direction
- Configure regular file backup for owner furnished offsite file/data backup service

# 4. PLC Control Panels

**4.01 PLC Panels**

| Qty | Description | Tag |
|---|---|---|
| 1 | Remote I/O-MCP consists of the following:<br>- 48x42x24" steel, NEMA1, wall-mounted enclosure<br>- Externally mounted filter fan w/filter<br>- Front panel mounted louvers<br>- AB MicroLogix PLC<br>- 21.5" Phoenix panel mounted workstation<br>- (2) 8-port Ethernet switches<br>- (3) Media converters<br>- Fiber optic patch panel<br>- (9) Circuit breakers<br>- (1) 50VA isolation transformer<br>- (4) Time delay relays<br>- (1) Pilot light<br>- 24VDC power supply<br>- UPS<br>- Surge protection | Remote I/O-MCP<br>DI-8 (32 w/spares)<br>DO-3 (32 w/spares)<br>AI-6 (10 w/spares)<br>AO-0 |
| 1 | Unit Process 4 – Disinfection (NaOCl Storage) Modifications control panel consists of the following:<br>- 72x42x24", NEMA12, free-standing enclosure w/deadfront<br>- Thermostatically controlled externally mounted fan w/filter<br>- Front mounted louvers<br>- AB MicroLogix PLC<br>- 8 port Ethernet switch<br>- Media converter<br>- Fiber optic patch panel<br>- (1) 50VA isolation transformer<br>- (2) Selector switch<br>- (4) HOA switch<br>- (7) Pilot lights<br>- (6) Relays<br>- (1) Process display<br>- (1) Visual strobe<br>- (1) 1P, 30A circuit breaker<br>- (8) 1P, 20A circuit breaker<br>- (3) 1P, 10A circuit breaker<br>- (1) 2P, 60A circuit breaker<br>- 24VDC power supply<br>- UPS<br>- Surge protection | FP-4-2<br>DI-9 (9 w/spares)<br>DO-8 (12 w/spares)<br>AI-0 (12 w/spares)<br>AO-1 (8 w/spares) |

| | | |
|---|---|---|
| 1 | Unit Process 5 – Filtration Modifications control panel consists of the following:<br>- (4) 52x30x30", 316SS, NEMA4X, floor-mounted enclosure<br>- (4) 52"x30" subpanel<br>- (4) 52"x30" deadfront<br>- Panel lights<br>- (9) Circuit breakers<br>- Thermostat<br>- Fan<br>- AB MicroLogix PLC<br>- 21.5" Phoenix panel mounted workstation<br>- Media converter<br>- (2) 8-port Ethernet switch<br>- Fiber optic patch panel<br>- (29) Pilot light<br>- (31) Relay<br>- (9) HOA switch<br>- (2) Pushbutton<br>- (11) Selector switch<br>- (1) 120/24VAC stepdown transformer<br>- (1) Resistance/current converter potentiometer switch<br>- 24VDC power supply<br>- UPS<br>- Surge protection | FP-5-1<br>DI-82<br>DO-41<br>AI-6<br>AO-6 |
| 1 | Unit Process 7 Washwater Recovery Modifications Remote I/O-WWR consists of the following:<br>- 30x30x18" 316SS, NEMA4X wall-mounted enclosure<br>- SS Sunshield<br>- Thermostat<br>- Intake & exhaust filter fans w/hoods<br>- AB MicroLogix PLC<br>- 8-port Ethernet switch<br>- Media converter<br>- Fiber optic patch panel<br>- (10) Circuit breakers<br>- (5) Relays<br>- (1) Pilot light<br>- 24VDC power supply<br>- UPS<br>- Surge protection | RIO-WWR<br>DI-12 (16w/spares)<br>DO-4 (8w/spares)<br>AI- 4 w/spares<br>AO-4 w/spares |

| | | |
|---|---|---|
| 1 | Main Lift Station RTU consists of the following:<br>- 30x30x18" 316SS, NEMA4X wall-mounted enclosure<br>- SS Sunshield<br>- Thermostat<br>- Intake & exhaust filter fans w/hoods<br>- AB CompactLogix PLC<br>- 8-port Ethernet switch<br>- Media converter<br>- Fiber optic patch panel<br>- (10) Circuit breakers<br>- (5) Relays<br>- (1) Pilot light<br>- 24VDC power supply<br>- UPS<br>- Surge protection | Main Lift Stn RTU<br>DI-24<br>DO-8<br>AI-12<br>AO-8 |
| | | |

**Factory Acceptance Test** (Lakeland, FL location)

- Un-witnessed Factory Test (UFT)
- Witnessed Factory Test (WFT); travel expenses and lodging not included.

## 5. Local Control Panels

- None included.

## 6. Field Equipment

| FIELD EQUIPMENT | | |
|---|---|---|
| **Qty** | **Description/Location** | **Tag** |
| 6 | RF Admittance/capacitance level transmitters ~ 11 ft probe length | LT-5-2-XA, XB |
| | | |
| | Above with sunshields and surge arrestor as required by specification. | |
| | Stanchions, mounting racks, root valves, tubing, and stilling wells by others. | |

# 7. Computer / Software / Network & Communications

| NETWORK, COMPUTERS & SOFTWARE | | |
|---|---|---|
| **Qty** | **Description** | **Notes** |
| 1 | Reusing existing network rack/server enclosure modifications consists of the following:<br>- Furnish and install fiber optic patch panel<br>- Furnish and install (2) slide out trays<br>- Furnish and install (2) SCADA computers/servers<br>- Furnish and install (1) UPS<br>- Furnish and install (1) Ethernet switch w/8 fiber optic connections | |
| 3 | 24” monitors | |
| 1 | 65” monitor | |
| 1 | Laser printer | |
| 2 | Keyboard & mouse | |
| 2 sets | Speakers | |
| 2 | Power strips | |
| 2 | VTSCADA runtime license update – Main WTP & RL Pratt WTP | |
| 2 | VTSCADA development license update – Main WTP & RL Pratt WTP | |
| 2 | VTSCADA thin clients license update – Main WTP & RL Pratt WTP | |
| 1 | 48”x72” SCADA network console/desk | |
| | | |

| COMMUNICATIONS | | |
|---|---|---|
| **Qty** | **Description** | **Notes** |
| 1 lot | 12 strand multimode OM2 fiber optic cable | |
| | | |

## 8. On-Site Services

**A. Onsite Services (Revere Staff Members)**

- Instrument Calibration and Start-up for Revere Supplied Field Equipment
- Termination and Testing of Fiber Optic Cable
- Establish Network Communications
- Loop (I/O) Checkout for Equipment Connected to Revere Supplied Panels wiring terminations to be performed by others
- A minimum of five (5) days construction/installation assistance is included – PICS section
- A minimum of five (5) days I&C system(s) startup/calibration is included – PICS section
- A minimum of one (1) day construction/installation assistance is included – PLC section
- A minimum of two (2) days PLC system(s) startup/modifications is included – PLC section
- A minimum of five (5) days testing is included is included – existing SCADA modifications section
- ADDITIONAL two (2) days programming modifications is included – existing SCADA modifications section
- Operational Readiness Test (ORT)
- System Performance Test (SAT)

**B. Training (Revere Staff Members)**

- Onsite training
  - Five (5) 8-hour PICS owner personnel training sessions
  - One (1) 8-hour PLC owner personnel training session
- All training is performed by qualified Revere Control Systems personnel unless specified herein.

## 9. Special Services

| MODIFICATION TO EXISTING EQUIPMENT | | |
|---|---|---|
| **Qty** | **Description** | **Notes** |
| 1 | Professional preconstruction video-audio tape of existing conditions of project impact areas per section 01720. | |
| 1 | Concrete sidewalk repair per drawing C-02 | |
| 1 | Patch stucco and repaint wall per drawing C-02 | |
| 1 | MIEX system PLC-3-8 modifications consists of the following:<br>- Furnish and install Micrologix PLC modules<br>- Furnish and install (2) media converters<br>- Furnish and install fiber optic patch panel<br>- Furnish and install 21.5" Phoenix panel mounted workstation<br>- Furnish and install(1) circuit breaker | PLC-3-8<br>DI-19 (31 w/spares)<br>DO-5 (12 w/spares)<br>AI-4 (8 w/spares)<br>AO-3 (4 w/spares) |

| | | |
|---|---|---|
| 1 | PLC-9-2 Unit Process 9 Finished water (storage & hi svc) pumping modifications consists of the following:<br>- Furnish and install CompactLogix PLC and corresponding I/O modules<br>- Furnish and install 8-port Ethernet switch<br>- Furnish and install media converter<br>- Furnish and install fiber optic patch panel | PLC-9-2<br>DI-26 (41 w/spares)<br>DO-6 (17 w/spares)<br>AI-10 (12 w/spares)<br>AO-10(12 w/spares) |

## 10. Project Close Out

| A. SPARE PARTS | | |
|---|---|---|
| **Qty** | **Description** | **Specification Section** |
| | None included. | |

| B. TOOLS & TEST EQUIPMENT | | |
|---|---|---|
| **Qty** | **Description** | **Specification Section** |
| | None included. | |

## 11. Project Pricing and Timelines

**Reference Bid Form for Pricing Information**

**Pricing:** Quotation is valid for sixty (60) days.

## 12. Warranty

Warranty shall run for a period of twenty-four (24) months after acceptance.

Thank you for your consideration of Revere Control Systems. We look forward to working with you on this project.

Sincerely,

*Jean Mead*

Jean Mead
Business Development Manager
Revere Control Systems, Inc.
Phone: 863-581-6865
jmead@reverecontrol.com

# Document A310™ – 2010

**Conforms with The American Institute of Architects AIA Document 310**

## *Bid Bond*

**CONTRACTOR:**
*(Name, legal status and address)*

Revere Control Systems, Inc.
2240 Rocky Ridge Rd.
Birmingham, AL 35216

**SURETY:**
*(Name, legal status and principal place of business)*
The Hanover Insurance Company
440 Lincoln Street
Worcester, MA 01653
**Mailing Address for Notices**

**OWNER:**
*(Name, legal status and address)*

Village of Palm Springs
226 Cypress Lane
Palm Springs, FL 33461

**This document has important legal consequences. Consultation with an attorney is encouraged with respect to its completion or modification.**

**Any singular reference to Contractor, Surety, Owner or other party shall be considered plural where applicable.**

**BOND AMOUNT:** 5% Five Percent of Amount Bid

**PROJECT:**
*(Name, location or address, and Project number, if any)*

SCADA System Upgrade - Main Water Treatment Plant ITB -2021B-003-0-2021/KW

The Contractor and Surety are bound to the Owner in the amount set forth above, for the payment of which the Contractor and Surety bind themselves, their heirs, executors, administrators, successors and assigns, jointly and severally, as provided herein. The conditions of this Bond are such that if the Owner accepts the bid of the Contractor within the time specified in the bid documents, or within such time period as may be agreed to by the Owner and Contractor, and the Contractor either (1) enters into a contract with the Owner in accordance with the terms of such bid, and gives such bond or bonds as may be specified in the bidding or Contract Documents, with a surety admitted in the jurisdiction of the Project and otherwise acceptable to the Owner, for the faithful performance of such Contract and for the prompt payment of labor and material furnished in the prosecution thereof; or (2) pays to the Owner the difference, not to exceed the amount of this Bond, between the amount specified in said bid and such larger amount for which the Owner may in good faith contract with another party to perform the work covered by said bid, then this obligation shall be null and void, otherwise to remain in full force and effect. The Surety hereby waives any notice of an agreement between the Owner and Contractor to extend the time in which the Owner may accept the bid. Waiver of notice by the Surety shall not apply to any extension exceeding sixty (60) days in the aggregate beyond the time for acceptance of bids specified in the bid documents, and the Owner and Contractor shall obtain the Surety's consent for an extension beyond sixty (60) days.

If this Bond is issued in connection with a subcontractor's bid to a Contractor, the term Contractor in this Bond shall be deemed to be Subcontractor and the term Owner shall be deemed to be Contractor.

When this Bond has been furnished to comply with a statutory or other legal requirement in the location of the Project, any provision in this Bond conflicting with said statutory or legal requirement shall be deemed deleted herefrom and provisions conforming to such statutory or other legal requirement shall be deemed incorporated herein. When so furnished, the intent is that this Bond shall be construed as a statutory bond and not as a common law bond.

Signed and sealed this 11th day of February, 2021.

REVERE CONTROL SYSTEMS, INC. CORPORATE SEAL 1980 (Seal) ALABAMA

Witness

Revere Control Systems, Inc.
*(Principal)*

By: Nan Johnson
*(Title)* Nan Johnson Vice President of Municipal Systems

Witness Sharon E. Griffith

The Hanover Insurance Company
*(Surety)* *(Seal)*

By:
*(Title)* Thomas J. Bole , Attorney-in-Fact

THE HANOVER INSURANCE COMPANY
MASSACHUSETTS BAY INSURANCE COMPANY
CITIZENS INSURANCE COMPANY OF AMERICA

*POWER OF ATTORNEY*

**THIS Power of Attorney limits the acts of those named herein, and they have no authority to bind the Company except in the manner and to the extent herein stated.**

**KNOW ALL PERSONS BY THESE PRESENTS:**

That THE HANOVER INSURANCE COMPANY and MASSACHUSETTS BAY INSURANCE COMPANY, both being corporations organized and existing under the laws of the State of New Hampshire, and CITIZENS INSURANCE COMPANY OF AMERICA, a corporation organized and existing under the laws of the State of Michigan, (hereinafter individually and collectively the "Company") does hereby constitute and appoint,

**Thomas J. Bole, Sharon E. Griffith, Gregg A. Tatum and/or Grantland Rice, III**

Of **Cobbs, Allen & Hall, Inc. of Birmingham, AL** each individually, if there be more than one named, as its true and lawful attorney(s)-in-fact to sign, execute, seal, acknowledge and deliver for, and on its behalf, and as its act and deed any place within the United States, any and all surety bonds, recognizances, undertakings, or other surety obligations. The execution of such surety bonds, recognizances, undertakings or surety obligations, in pursuance of these presents, shall be as binding upon the Company as if they had been duly signed by the president and attested by the secretary of the Company, in their own proper persons. Provided however, that this power of attorney limits the acts of those named herein; and they have no authority to bind the Company except in the manner stated and to the extent of any limitation stated below:

**Any such obligations in the United States, not to exceed Twenty-Five Million and No/100 ($25,000,000) in any single instance**

That this power is made and executed pursuant to the authority of the following Resolutions passed by the Board of Directors of said Company, and said Resolutions remain in full force and effect:

RESOLVED: That the President or any Vice President, in conjunction with any Vice President, be and they hereby are authorized and empowered to appoint Attorneys-in-fact of the Company, in its name and as it acts, to execute and acknowledge for and on its behalf as surety, any and all bonds, recognizances, contracts of indemnity, waivers of citation and all other writings obligatory in the nature thereof, with power to attach thereto the seal of the Company. Any such writings so executed by such Attorneys-in-fact shall be binding upon the Company as if they had been duly executed and acknowledged by the regularly elected officers of the Company in their own proper persons.

RESOLVED: That any and all Powers of Attorney and Certified Copies of such Powers of Attorney and certification in respect thereto, granted and executed by the President or Vice President in conjunction with any Vice President of the Company, shall be binding on the Company to the same extent as if all signatures therein were manually affixed, even though one or more of any such signatures thereon may be facsimile. (Adopted October 7, 1981 – The Hanover Insurance Company; Adopted April 14, 1982 – Massachusetts Bay Insurance Company; Adopted September 7, 2001 – Citizens Insurance Company of America)

IN WITNESS WHEREOF, THE HANOVER INSURANCE COMPANY, MASSACHUSETTS BAY INSURANCE COMPANY and CITIZENS INSURANCE COMPANY OF AMERICA have caused these presents to be sealed with their respective corporate seals, duly attested by two Vice Presidents, this **11th** day of **March, 2020.**

The Hanover Insurance Company
Massachusetts Bay Insurance Company
Citizens Insurance Company of America

John C. Roche, EVP and President

The Hanover Insurance Company
Massachusetts Bay Insurance Company
Citizens Insurance Company of America

James H. Kawiecki, Vice President

THE COMMONWEALTH OF MASSACHUSETTS )
COUNTY OF WORCESTER ) ss.

On this **11th** day of **March, 2020** before me came the above named Vice Presidents of The Hanover Insurance Company, Massachusetts Bay Insurance Company and Citizens Insurance Company of America, to me personally known to be the individuals and officers described herein, and acknowledged that the seals affixed to the preceding instrument are the corporate seals of The Hanover Insurance Company, Massachusetts Bay Insurance Company and Citizens Insurance Company of America, respectively, and that the said corporate seals and their signatures as officers were duly affixed and subscribed to said instrument by the authority and direction of said Corporations.

DIANE J. MARINO
Notary Public
COMMONWEALTH OF MASSACHUSETTS
My Commission Expires
March 4, 2022

Diane J. Marino, Notary Public
My Commission Expires March 4, 2022

I, the undersigned Vice President of The Hanover Insurance Company, Massachusetts Bay Insurance Company and Citizens Insurance Company of America, hereby certify that the above and foregoing is a full, true and correct copy of the Original Power of Attorney issued by said Companies, and do hereby further certify that the said Powers of Attorney are still in force and effect.

GIVEN under my hand and the seals of said Companies, at Worcester, Massachusetts, this 11th day of February, 2021.

CERTIFIED COPY

Theodore G. Martinez, Vice President

SECTION 00431
TABULATION OF SUBCONTRACTORS AND SUPPLIERS

The Undersigned states that the following is a full and complete list of the proposed subcontractors and suppliers on this Project and the class of work to be performed by each and that such list will not be added to nor altered without written consent of the Owner through the Engineer.

| | **SUBCONTRACTOR OR SUPPLIER AND ADDRESS** | **CLASS OF WORK OR MATERIAL** |
|---|---|---|
| (1) | Durham Electric<br>P.O.Box 3843, Hollywood, FL 33083 | Electrical Installation |
| (2) | Rexel<br>4010 W. Osborne Avenue, Tampa, FL 33614 | PLC Hardware |
| (3) | Dell Computer Corporation<br>One Dell Way, Round Rock, TX, 78682 | Computer Servers / Workstations |
| (4) | Mayer Electric / Hoffman<br>3405 4th Avenue S., Birmingham, AL 35222 | Control Panel Enclosures |
| (5) | Abbey Rogers / Drexelbrook<br>10150 Highland Manor Drive, Tampa, FL 33610 | Field Instrumentation, Level Transmitters |
| (6) | Trihedral<br>1160 Bedford Highway, Bedford, NS, Canada B4A 1C1 | HMI Software |
| (7) | | |

(Add additional pages as needed.)

BIDDER: Revere Control Systems, Inc.

By: Nan Johnson

Name: Nan Johnson

Title: Vice President of Municipal Systems

Date: 3/10/2021

SECTION 00440
FLORIDA TRENCH SAFETY ACT CERTIFICATION

The Bidder acknowledges that included in the various items of the proposal and in the Total Bid Price are costs for complying with the most current version of the Florida Trench Safety Act (90-96, Laws of Florida). The Bidder further identifies the costs to be summarized below:

| | Cost |
|---|---|
| 1. Trench Safety Act Compliance | $ 0.00 |
| 2. Special Shoring | $ 0.00 |

Identify method of compliance for Item #1: The Deepest trench required is 24" for direct buried conduit. Unique methods for Trench Safety Act Compliance are not needed.

Identify or attach a copy of Special Shoring Requirements for Item #2: Special shoring is not needed due to the limited depth of 24" for trenches.

The undersigned certifies that he/she is the Contractor who will perform the trench excavation for this project and hereby gives written assurance that Contractor will comply with the applicable trench safety standards specifically set forth in Florida's Trench Safety Act (90-96, Laws of Florida).

BIDDER: Revere Control Systems, Inc.

By: Nan Johnson

Name: Nan Johnson

Title: Vice President of Municipal Systems

Sworn to and subscribed before me this 10th day of March, 2021

Melissa C. Stewart
Notary Public

MELISSA C STEWART NOTARY PUBLIC ALABAMA STATE AT LARGE

My Commission Expires: Feb. 23, 2023

# SECTION 00451
# QUALIFICATIONS STATEMENT

**THE INFORMATION SUPPLIED IN THIS DOCUMENT IS CONFIDENTIAL TO THE EXTENT PERMITTED BY LAWS AND REGULATIONS**

**1. SUBMITTED BY:**

Official Name of Firm: Revere Control systems, Inc.

Address: 2240 Rocky Ridge Road
Birmingham, AL 35216

**2. SUBMITTED TO:** Kimberly Wynn, Village Clerk, Village of Palm Springs

**3. SUBMITTED FOR:** 2021B-003 SCADA System Upgrade, Main Water Treatment Plant

Owner: Village of Palm Springs

Project Name: Bid Number: 2021B-003
SCADA System Upgrade, Main Water Treatment Plant

**TYPE OF WORK:** Specialty Engineering Firm-Electrical
Supervisory Control and Data Acquisition, Systems Integration
Automation Controls, Instrumentation and Controls

**4. CONTRACTOR'S CONTACT INFORMATION**

Contact Person: Jean Mead

Title: Business Development Manager

Phone: (863) 940-5123

Email: jmead@reverecontrol.com

EJCDC® C-451, Qualifications Statement.
Copyright © 2013 National Society of Professional Engineers, American Council of Engineering Companies, and American Society of Civil Engineers. All rights reserved.

5. **AFFILIATED COMPANIES:**

Name: _____

Address: _____

_____

_____

6. **TYPE OF ORGANIZATION:**

☐ SOLE PROPRIETORSHIP

Name of Owner: _____

Doing Business As: _____

Date of Organization: _____

☐ PARTNERSHIP

Date of Organization: _____

Type of Partnership: _____

Name of General Partner(s): _____

_____

_____

☒ CORPORATION

State of Organization: Alabama

Date of Organization: July 12, 1980

Executive Officers:

- President: Robert R. Adams
- Vice President(s): Tom Adams, Rick Braddock, Greg Graves, Marc Handley, Nan Johnson, Jason Leeper, David Williams, Tom York
- Treasurer: _____
- Secretary: Nanette D. Johnson


Copyright © 2013 National Society of Professional Engineers, American Council of Engineering Companies, and American Society of Civil Engineers. All rights reserved.

☐ LIMITED LIABILITY COMPANY

State of Organization: _____

Date of Organization: _____

Members: _____

_____

_____

_____

☐ JOINT VENTURE

Sate of Organization: _____

Date of Organization: _____

Form of Organization: _____

Joint Venture Managing Partner

- Name: _____

- Address: _____

_____

_____

Joint Venture Managing Partner

- Name: _____

- Address: _____

_____

Joint Venture Managing Partner

- Name: _____

- Address: _____

_____


Copyright © 2013 National Society of Professional Engineers, American Council of Engineering Companies, and American Society of Civil Engineers. All rights reserved.

7. **LICENSING**

Jurisdiction: State of Florida

Type of License: General Contractor's License

License Number: CGC1526173

Jurisdiction: State of Florida

Type of License: Board of Professional Engineers Certificate of Authorization

License Number: CA8769

8. **CERTIFICATIONS** CERTIFIED BY:

Disadvantage Business Enterprise: _____

Minority Business Enterprise: _____

Woman Owned Enterprise: _____

Small Business Enterprise: _____

Other (_____): _____

9. **BONDING INFORMATION**

Bonding Company: The Hanover Insurance Company

Address: 440 Lincoln Street

Worchester, MA 01653

Bonding Agent: Cobbs, Allen, & Hall

Address: 115 Office Park Drive

Birmingham, AL 35223

Contact Name: Joey Bole

Phone: (205) 414-8100

Aggregate Bonding Capacity: $35,000,000.00

Available Bonding Capacity as of date of this submittal: $32,653,761.00


Copyright © 2013 National Society of Professional Engineers, American Council of Engineering Companies, and American Society of Civil Engineers. All rights reserved.

## 10. FINANCIAL INFORMATION

Financial Institution: ServisFirst

Address: 500 Woodcrest Place

Birmingham, AL 35209

Account Manager: Lee McKinnon

Phone: (205) 949-0858

INCLUDE AS AN ATTACHMENT **GENERALLY ACCEPTED ACCOUNTING PRINCIPLES** ***(GAAP)*** BASIS REVIEWED BALANCE SHEET FOR EACH OF THE LAST 3 YEARS. THE REVIEW SHALL BE PERFORMED BY A CERTIFIED PUBLIC ACCOUNTANT (CPA). FAILURE TO PROVIDE THE CPA-REVIEWED BALANCE SHEET AS REQUIRED MAY CAUSE THE BID/PROPOSAL TO BE DEEMED NON-RESPONSIVE.

## 11. CONSTRUCTION EXPERIENCE:

Current Experience:

List on **Schedule A** all uncompleted projects currently under contract (If Joint Venture list each participant's projects separately). Please see the attached Major Projects in Progress as representative of Schedule A.

Previous Experience:

List on **Schedule B** all projects completed within the last 5 Years (If Joint Venture list each participant's projects separately). Please see the attached Major Projects Completed as representative of Schedule B.

Has firm listed in Section 1 ever failed to complete a construction contract awarded to it?

☐ YES ☒ NO

If YES, attach as an Attachment details including Project Owner's contact information.

Has any Corporate Officer, Partner, Joint Venture participant or Proprietor ever failed to complete a construction contract awarded to them in their name or when acting as a principal of another entity?

☐ YES ☒ NO

If YES, attach as an Attachment details including Project Owner's contact information.

Are there any judgments, claims, disputes or litigation pending or outstanding involving the firm listed in Section 1 or any of its officers (or any of its partners if a partnership or any of the individual entities if a joint venture)?


Copyright © 2013 National Society of Professional Engineers, American Council of Engineering Companies, and American Society of Civil Engineers. All rights reserved.

☐ YES ☒ NO

If YES, attach as an Attachment details including Project Owner's contact information.

**12. SAFETY PROGRAM:**

Name of Contractor's Safety Officer: Tom Adams, Vice President of Safety, Quality, and Compliance

Include the following as attachments:

Provide as an Attachment Contractor's (and Contractor's proposed Subcontractors and Suppliers furnishing or performing Work having a value in excess of 10 percent of the total amount of the Bid) OSHA No. 300 - Log & Summary of Occupational Injuries & Illnesses for the past 5 years.

Provide as an Attachment Contractor's (and Contractor's proposed Subcontractors and Suppliers furnishing or performing Work having a value in excess of 10 percent of the total amount of the Bid) list of all OSHA Citations & Notifications of Penalty (monetary or other) received within the last 5 years (indicate disposition as applicable) - IF NONE SO STATE.

NONE

Provide as an Attachment Contractor's (and Contractor's proposed Subcontractors and Suppliers furnishing or performing Work having a value in excess of 10 percent of the total amount of the Bid) list of all safety citations or violations under any state all received within the last 5 years (indicate disposition as applicable) - IF NONE SO STATE.

NONE

Provide the following for the firm listed in Section V (and for each proposed Subcontractor furnishing or performing Work having a value in excess of 10 percent of the total amount of the Bid) the following (attach additional sheets as necessary):

Workers' compensation Experience Modification Rate (EMR) for the last 5 years:

| | | | |
|---|---|---|---|
| YEAR | 2020 | EMR | .69 |
| YEAR | 2019 | EMR | .89 |
| YEAR | 2018 | EMR | .90 |
| YEAR | 2017 | EMR | .94 |
| YEAR | 2016 | EMR | .75 |

Total Recordable Frequency Rate (TRFR) for the last 5 years:

| | | | |
|---|---|---|---|
| YEAR | 2020 | TRFR | 0.00 |
| YEAR | 2019 | TRFR | 0.52 |
| YEAR | 2018 | TRFR | 1.02 |
| YEAR | 2017 | TRFR | 0.00 |
| YEAR | 2016 | TRFR | 0.57 |


Copyright © 2013 National Society of Professional Engineers, American Council of Engineering Companies, and American Society of Civil Engineers. All rights reserved.

Total number of man-hours worked for the last 5 Years:

| | | | |
|---|---|---|---|
| YEAR | 2020 | TOTAL NUMBER OF MAN-HOURS | 366,946 |
| YEAR | 2019 | TOTAL NUMBER OF MAN-HOURS | 384,046 |
| YEAR | 2018 | TOTAL NUMBER OF MAN-HOURS | 390,263 |
| YEAR | 2017 | TOTAL NUMBER OF MAN-HOURS | 410,144 |
| YEAR | 2016 | TOTAL NUMBER OF MAN-HOURS | 351,106 |

Provide Contractor's (and Contractor's proposed Subcontractors and Suppliers furnishing or performing Work having a value in excess of 10 percent of the total amount of the Bid) Days Away From Work, Days of Restricted Work Activity or Job Transfer (DART) incidence rate for the particular industry or type of Work to be performed by Contractor and each of Contractor's proposed Subcontractors and Suppliers) for the last 5 years:

| | | | |
|---|---|---|---|
| YEAR | 2020 | DART | 0.00 |
| YEAR | 2019 | DART | 0.00 |
| YEAR | 2018 | DART | 0.00 |
| YEAR | 2017 | DART | 0.00 |
| YEAR | 2016 | DART | 0.00 |

## 13. EQUIPMENT:

MAJOR EQUIPMENT:

List on **Schedule C** all pieces of major equipment available for use on Owner's Project.


Copyright © 2013 National Society of Professional Engineers, American Council of Engineering Companies, and American Society of Civil Engineers. All rights reserved.

I HEREBY CERTIFY THAT THE INFORMATION SUBMITTED HEREWITH, INCLUDING ANY ATTACHMENTS, IS TRUE TO THE BEST OF MY KNOWLEDGE AND BELIEF.

NAME OF ORGANIZATION: Revere Control Systems, Inc.

BY: Nan Johnson Nan Johnson

TITLE: Vice President of Municipal Systems

DATED: 3/9/2021

NOTARY ATTEST:

SUBSCRIBED AND SWORN TO BEFORE ME

THIS 9th DAY OF March, 20 21

Melissa C. Stewart

NOTARY PUBLIC - STATE OF Alabama

MY COMMISSION EXPIRES: Feb. 23, 2023

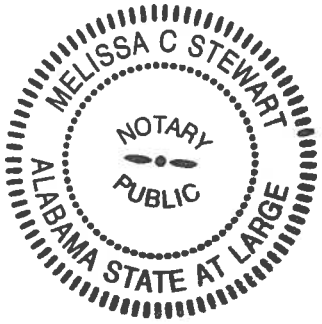


REQUIRED ATTACHMENTS

1. Schedule A (Current Experience).
2. Schedule B (Previous Experience).
3. Schedule C (Major Equipment).
4. Reviewed balance sheet for each of the last 3 years for firm named in Section 1.
5. Evidence of authority for individuals listed in Section 6 to bind organization to an agreement.
6. Resumes of officers and key individuals (including Safety Officer) of firm named in Section 1.
7. Required safety program submittals listed in Section 12.
8. Additional items as pertinent.


Copyright © 2013 National Society of Professional Engineers, American Council of Engineering Companies, and American Society of Civil Engineers. All rights reserved.

☐ YES ☐ NO

If YES, attach as an Attachment details including Project Owner's contact information.

**12. SAFETY PROGRAM:**

Name of Contractor's Safety Officer: Steven Geisler

Include the following as attachments:

Provide as an Attachment Contractor's (and Contractor's proposed Subcontractors and Suppliers furnishing or performing Work having a value in excess of 10 percent of the total amount of the Bid) OSHA No. 300 - Log & Summary of Occupational Injuries & Illnesses for the past 5 years.

Provide as an Attachment Contractor's (and Contractor's proposed Subcontractors and Suppliers furnishing or performing Work having a value in excess of 10 percent of the total amount of the Bid) list of all OSHA Citations & Notifications of Penalty (monetary or other) received within the last 5 years (indicate disposition as applicable) - IF NONE SO STATE. NONE

Provide as an Attachment Contractor's (and Contractor's proposed Subcontractors and Suppliers furnishing or performing Work having a value in excess of 10 percent of the total amount of the Bid) list of all safety citations or violations under any state all received within the last 5 years (indicate disposition as applicable) - IF NONE SO STATE. NONE

Provide the following for the firm listed in Section V (and for each proposed Subcontractor furnishing or performing Work having a value in excess of 10 percent of the total amount of the Bid) the following (attach additional sheets as necessary):

Workers' compensation Experience Modification Rate (EMR) for the last 5 years:

| | | | |
|---|---|---|---|
| YEAR | 2016 | EMR | 1.00 |
| YEAR | 2017 | EMR | 1.00 |
| YEAR | 2018 | EMR | 1.00 |
| YEAR | 2019 | EMR | 1.00 |
| YEAR | 2020 | EMR | 1.00 |

Total Recordable Frequency Rate (TRFR) for the last 5 years:

| | | | |
|---|---|---|---|
| YEAR | 2016 | TRFR | 0 |
| YEAR | 2017 | TRFR | 0 |
| YEAR | 2018 | TRFR | 0 |
| YEAR | 2019 | TRFR | 0 |
| YEAR | 2020 | TRFR | 0 |

EJCDC® C-451, Qualifications Statement.
Copyright © 2013 National Society of Professional Engineers, American Council of Engineering Companies, and American Society of Civil Engineers. All rights reserved.

Total number of man-hours worked for the last 5 Years:

| | | | |
|---|---|---|---|
| YEAR | 2016 | TOTAL NUMBER OF MAN-HOURS | 3000 |
| YEAR | 2017 | TOTAL NUMBER OF MAN-HOURS | 1000 |
| YEAR | 2018 | TOTAL NUMBER OF MAN-HOURS | 366 |
| YEAR | 2019 | TOTAL NUMBER OF MAN-HOURS | 6817 |
| YEAR | 2020 | TOTAL NUMBER OF MAN-HOURS | 6180 |

Provide Contractor's (and Contractor's proposed Subcontractors and Suppliers furnishing or performing Work having a value in excess of 10 percent of the total amount of the Bid) Days Away From Work, Days of Restricted Work Activity or Job Transfer (DART) incidence rate for the particular industry or type of Work to be performed by Contractor and each of Contractor's proposed Subcontractors and Suppliers) for the last 5 years:

| | | | |
|---|---|---|---|
| YEAR | 2016 | DART | 0 |
| YEAR | 2017 | DART | 0 |
| YEAR | 2018 | DART | 0 |
| YEAR | 2019 | DART | 0 |
| YEAR | 2020 | DART | 0 |

13. **EQUIPMENT:**

MAJOR EQUIPMENT: NONE

List on **Schedule C** all pieces of major equipment available for use on Owner's Project.


Copyright © 2013 National Society of Professional Engineers, American Council of Engineering Companies, and American Society of Civil Engineers. All rights reserved.

SECTION 00452
BIDDER'S STATEMENT OF DISPUTES, LITIGATION,
ARBITRATION, AND SURETY COMPLETION
LAST THREE (3) YEARS

| PROJECT | NAME AND ADDRESS OF OWNER OR ENGINEER | NAME AND PHONE OF OWNER OR ENGINEER REPRESENTATIVE | DATE OF CONTRACT | AMOUNT | STATUS |
|---|---|---|---|---|---|

Not Applicable, There have been no disputes in the past 3 years.

(Signed) Nan Johnson

Nan Johnson, Vice President of Municipal Systems

SECTION 00453

NONCOLLUSION AFFIDAVIT

TO: The Village of Palm Springs, herein called the "Owner."

Pursuant to bidding requirements for the work titled "**SCADA System Upgrade, Main Water Treatment Plant**," the enclosed contract documents shall be provided to the Owner.

State of Alabama

County of Jefferson

Nan Johnson, being first duly
(Officer's Name)

sworn, deposes, and says that:

A. He\She is Vice President of Municipal Systems (officer's title) of Revere Control Systems, Inc. (company name), the Bidder that has submitted the attached bid;

B. He\She is fully informed respecting the preparation and contents of the attached bid and of all pertinent circumstances respecting such bid;

C. Such bid is genuine and is not a collusive or sham bid;

D. Neither the said Bidder nor any of its officers, partners, owners, agents, representatives, employees, or parties in interest, including this affiant, has in any way colluded, conspired, connived, or agreed, directly or indirectly with any other Bidder, firm, or person to submit a collusive or sham bid in connection with the contract for which the attached bid has been submitted or to refrain from bidding in connection with such contract, or has in any manner, directly or indirectly, sought by agreement or collusion or communication or conference with any other Bidder, firm, or person to fix the price or prices in the attached bid or of any other Bidder, or to fix any overhead, profit, or cost element of the bid price or the bid price of any other Bidder, or to secure through any collusion, conspiracy, connivance, or unlawful agreement any advantage against the _____ or any person interested in the proposed contract; and

E. The price or prices quoted in the attached bid are fair and proper and are not tainted by any collusion, conspiracy, connivance, or unlawful agreement on the part of the Bidder or any of its agents, representatives, owners, employees, or parties in interest, including this affiant.

(Signed) Nan Johnson

Nan Johnson, VP of Municipal Systems

Subscribed and sworn to before me
this 8th day of March, 2021

Melissa C Stewart
Notary Public

My commission expires Feb. 23, 2023

MELISSA C STEWART
NOTARY
PUBLIC
ALABAMA STATE AT LARGE

SECTION 00454
DRUG-FREE WORKPLACE CERTIFICATE

I, the undersigned, in accordance with Florida Statute 287.087, hereby certify that Revere Control Systems, Inc. (Print or Type Name of Firm)

- Publishes a written statement notifying that the unlawful manufacture, distribution, dispensing, possession, or use of a controlled substance is prohibited in the workplace named above, and specifying actions that will be taken against violations of such prohibition.
- Informs employees about the dangers of drug abuse in the workplace; the firm's policy of maintaining a drug-free working environment and available drug counseling, rehabilitation, and employee assistance programs; and the penalties that may be imposed upon employees for drug-use violations.
- Gives each employee engaged in providing commodities or contractual services that are under bid or proposal a copy of the statement specified above.
- Notifies the employees that as a condition of working on the commodities or contractual services under bid or proposal, the employee will abide by the terms of the statement and will notify the employer of any conviction of or plea of guilty or nolo contendere to any violation of Chapter 1893 or any controlled substance law of the State of Florida or the United States for a violation occurring in the workplace, no later than 5 days after such conviction, and requires employees to sign copies of such written statement to acknowledge their receipt.
- Imposes a sanction on or requires the satisfactory participation in a drug-abuse assistance or rehabilitation program, if such is available in the employee's community, by any employee who is so convicted.
- Makes a good faith effort to continue to maintain a drug-free workplace through the implementation of the drug-free workplace program.

"As a person authorized to sign this statement, I certify that the business, firm, or corporation named above complies fully with the requirements set forth herein."

Nan Johnson
Authorized Signature

3/8/2021
Date Signed

State of: Alabama

County of: Jefferson

Sworn to and subscribed before me this 8th day of March, 2021

Personally known or Produced Identification _____
(Specify Type of Identification)

Melissa C. Stewart
Signature of Notary

My Commission Expires Feb. 23, 2023

MELISSA C STEWART NOTARY PUBLIC ALABAMA STATE AT LARGE

SECTION 00455
SWORN STATEMENT UNDER SECTION 287.133(3)(a),
FLORIDA STATUTES, ON PUBLIC ENTITY CRIMES

(To be signed in the presence of a notary public or other officer authorized to administer oaths.)

STATE OF Alabama

COUNTY OF Jefferson

Before me, the undersigned authority, personally appeared Nan Johnson, who, being by me first duly sworn, made the following statement:

1. The business address of Revere Control Systems, Inc.
(firm name of Bidder/Contractor)

is 2240 Rocky Ridge Road, Birmingham, AL 35216.

2. My relationship to Revere Control Systems, Inc.
(firm name of Bidder/Contractor)

is Vice President of Municipal Systems.
(relationship such as sole proprietor, partner, president, vice president)

3. I understand that a "public entity crime" as defined in Section 287.133 of the Florida Statutes includes a violation of any state or federal law by a person with respect to and directly related to the transaction of business with any public entity in Florida or with an agency or political subdivision of any other state or with the United States, including, but not limited to, any bid or contract for goods or services to be provided to any public entity or such an agency or political subdivision and involving antitrust, fraud, theft, bribery, collusion, racketeering, conspiracy, or material misrepresentation.

4. I understand that "convicted" or "conviction" is defined by the statute to mean a finding of guilt or a conviction of a public entity crime, with or without adjudication of guilt, in any federal or state trial court of record relating to charges brought by indictment or information after July 1, 1989, as a result of a jury verdict, nonjury trial, or entry of a plea of guilty or nolo contendere.

5. I understand that "affiliate" is defined by the statute to mean (1) a predecessor or successor of a person or a corporation convicted of a public entity crime; or (2) an entity under the control of any natural person who is active in the management of the entity and who has been convicted of a public entity crime; or (3) those officers, directors, executives, partners, shareholders, employees, members, and agents who are active in the management of an affiliate; or (4) a person or corporation who knowingly entered into a joint venture with a person who has been convicted of a public entity crime in Florida during the preceding 36 months.

6. Neither the Bidder/Contractor nor any officer, director, executive, partner, shareholder, employee, member or agent who is active in the management of the Bidder/Contractor, nor any affiliate of the Bidder/Contractor, has been convicted of public entity crime subsequent to July 1, 1989.

(Draw a line through Paragraph 6 if Paragraph 7 below applies.)

7. ~~There has been a conviction of a public entity crime by the Bidder/Contractor, or an officer, director, executive, partner, shareholder, employee, member or agent of the Bidder/Contractor who is active in the management of the Bidder/Contractor or an affiliate of the Bidder/Contractor. A determination has been made pursuant to Section 287.133(3) by order of the Division of Administrative Hearings that it is not in the public interest for the name of the convicted person or affiliate to appear on the convicted vendor list. The name of the convicted person or affiliate is_____.~~

~~A copy of the order of the Division of Administrative Hearings is attached to this statement.~~

(Draw a line through Paragraph 7 if Paragraph 6 above applies.)

Nan Johnson
(Signature)

Sworn to and subscribed to before me in the State and County first mentioned above on the 8th day of March, 2021.

Melissa C. Stewart
Notary Public

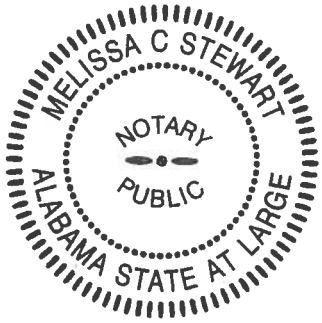


(affix seal)

Feb. 23, 2023
My commission expires

SECTION 00456
SCRUTINIZED COMPANIES CERTIFICATION FORM

By execution below, I, Nan Johnson, on behalf of Revere Control Systems, Inc. (hereinafter, the "Contractor"), hereby swear or affirm to the following certifications:

The following certifications apply to all procurements:

1. The Contractor has reviewed section 215.4725, Florida Statutes, section 215.473, Florida Statutes and section 287.135, Florida Statutes, and understands the same.
2. The Contractor is not on the Scrutinized Companies that Boycott Israel List nor is the Contractor engaged in a boycott of Israel.
3. If awarded a contract, the Contractor agrees to require these certifications for applicable subcontracts entered into for the performance of work/services under this procurement.
4. If awarded a contract, the Contractor agrees that the certifications in this section shall be effective and relied upon by the City for the entire term of the contract, including any and all renewals.

If the contract awarded hereunder is for one million dollars or more, the following additional certifications apply:

1. The Contractor is not on the Scrutinized Companies with Activities in Sudan List.
2. The Contractor is not on the Scrutinized Companies with Activities in the Iran Petroleum Energy Sector List.
3. The Contractor is not engaged in business operations in Cuba or Syria.
5. If awarded a contract, the Contractor agrees to require these certifications for applicable subcontracts entered into for the performance of work/services under this procurement.
6. If awarded a contract, the Contractor agrees that the certifications in this section shall be effective and relied upon by the City for the entire term of the contract, including any and all renewals.

**CONTRACTOR:**
By: Nan Johnson
Name: Nan Johnson
Title: Vice President of Municipal Systems
Date: 3/8/2021

STATE OF ~~FLORIDA~~ Alabama
COUNTY OF Jefferson

The foregoing instrument was sworn to (or affirmed) and subscribed before this 8th day of March, 2021, by Nan Johnson, who is the VP of Municipal Systems of Revere Control Systems, Inc., who is personally known to me or who has produced _____ as identification.

MELISSA C STEWART NOTARY PUBLIC ALABAMA STATE AT LARGE

NOTARY PUBLIC Melissa C. Stewart
Printed Name of Notary Melissa C. Stewart
My Commission expires: Feb. 23, 2023

SCHEDULE A Please see the attached Major Projects in Progress as Schedule A.

CURRENT EXPERIENCE

| Project Name | Owner's Contact Person | Design Engineer | Contract Date | Type of Work | Status | Cost of Work |
|---|---|---|---|---|---|---|
| | Name:<br>Address:<br>Telephone: | Name:<br>Company:<br>Telephone: | | | | |
| | Name:<br>Address:<br>Telephone: | Name:<br>Company:<br>Telephone: | | | | |
| | Name:<br>Address:<br>Telephone: | Name:<br>Company:<br>Telephone: | | | | |
| | Name:<br>Address:<br>Telephone: | Name:<br>Company:<br>Telephone: | | | | |
| | Name:<br>Address:<br>Telephone: | Name:<br>Company:<br>Telephone: | | | | |
| | Name:<br>Address:<br>Telephone: | Name:<br>Company:<br>Telephone: | | | | |
| | Name:<br>Address:<br>Telephone: | Name:<br>Company:<br>Telephone: | | | | |


**Copyright © 2013 National Society of Professional Engineers, American Council of Engineering Companies, and American Society of Civil Engineers. All rights reserved.**

## MAJOR MUNICIPAL PROJECTS IN PROGRESS

**January 2021**

| Project Name and Number | | Owner | Project Manager | Architect/Engineer | Contract Amount | Percent Complete | Scheduled Complete Date |
|---|---|---|---|---|---|---|---|
| Y0831 | Orange Co PS Pkg 18 | Orange County Board of Commissioners, FL | Dave Abel | CPH Corporation | $ 118,764 | 67% | 11/30/2020 |
| Z0381 | New Augusta WWTP | City of New Augusta, MS | Dave Abel | Hazen & Sawyer | $ 126,917 | 85% | 2/28/2021 |
| Z0531 | Southside WWTP Improvements | Southside Water Works & Sewer Board, AL | Lance Owens | CDG Engineering & Associates | $ 133,230 | 62% | 2/28/2021 |
| Y1164 | Paris WTP Improvements Phase 2 | City of Paris, TN | Dave Abel | Jacobs Engineering Group | $ 273,347 | 100% | 2/28/2021 |
| Z0020 | Foley Effluent Disposal System Modifications | Georgia-Pacific | Dave Abel | Tetra Tech | $ 241,430 | 87% | 2/28/2021 |
| Z0045 | Orlando Lift Station #1 Improvements | City of Orlando, FL | Dave Abel | Tetra Tech | $ 173,370 | 99% | 2/28/2021 |
| Z0620 | Water System Improvement, Phase III SCADA | Clay Co. Utility Authority, AL | Lance Owens | O'Brien & Gere Engineers | $ 244,274 | 60% | 2/28/2021 |
| Z0760 | Melbourne Surface Water SCADA Upgrade | City of Melbourne, FL | Jay Wagner | CH2M Hill Engineers | $ 1,168,333 | 98% | 2/28/2021 |
| Z0305 | Cullman Duck River | City of Cullman, AL | Lance Owens | CH2M | $ 190,219 | 99% | 2/28/2021 |
| Y0486 | Sarasota LS 87 | City of Sarasota, FL | Jay Wagner | McKim & Creed | $ 337,050 | 95% | 2/28/2021 |
| AA0163 | Orlando Otilities Commission OUC Ozonator Replacement | Garney/Wharton-Smith Joint Venture | Shawn Poole | Jacobs Engineering Group | $ 388,403 | 92% | 3/31/2021 |
| Z0984 | Dixie Park Facility Demo & In-Line PS Replacement | Martin County Utilities Stuart, FL | Nan Johnson | Holtz Consulting Engineers | $ 135,928 | 99% | 3/31/2021 |
| Z0141 | Electrical Lift Station Upgrades (10 Stations) | City of Orlando, FL | Dave Abel | Carr & Collier | $ 570,849 | 100% | 3/31/2021 |
| W0443 | Tampa University Pump Sation No 1 Replacement | Tampa University Tampa, FL | Nan Johnson | Tricon Consulting Engineers | $ 122,467 | 84% | 3/31/2021 |
| Z0221 | Altamonte Springs RWRF | City of Altamont Springs, FL | Jay Wagner | Atkins Engineering | $ 162,692 | 77% | 3/31/2021 |
| Z0278 | TOHO S. Bermuda WRF | Toho Water Authority Kissimmee, FL | Jay Wagner | Carollo Engineers | $ 230,041 | 100% | 3/31/2021 |
| Z0479 | St. Petersburg Oberly and Washington Chemical Injection Project | City of St. Petersburg, FL | Jay Wagner | Arcadis | $ 236,537 | 102% | 3/31/2021 |
| Z0536 | Iron Bridge RWRF Improvements | City of Orlando, FL | Jay Wagner | RTM Engineering Consultants | $ 237,818 | 79% | 3/31/2021 |
| Z0580 | Columbia WTP Improvements | Columbia Power & Water Systems | Dave Abel | Inflo Design Group | $ 330,840 | 82% | 3/31/2021 |
| Z0658 | Auburn Well No 4 | Water Works Board of the City of Auburn, AL | James Noe | Jacobs Engineering Group | $ 147,654 | 71% | 3/31/2021 |
| Z0740 | Capri Isle Pump Station Upgrade Clearwater, FL | Pinellas County Utilities | Jay Wagner | McKim & Creed | $ 239,320 | 100% | 3/31/2021 |
| Z0981 | 2019 SCADA Upgrade Phase 1 | American Water Enterprises - Fort Rucker, AL | Lance Owens | Revere Control Systems, Inc. | $ 566,104 | 81% | 3/31/2021 |
| AA0415 | Phosphorous Control Chemical Additions | Jefferson County Environmental Services, Birmingham, AL | Lance Owens | Jacobs Engineering Group | $ 145,124 | 79% | 3/31/2021 |
| AA0112 | HC Morgan Clarifier Addition and Misc Improvement Projects | City of Auburn, AL | James Noe | Jacobs Engineering Group | $ 275,814 | 74% | 3/31/2021 |
| W1174 | Design/Build for S-331 C&CC Communication System Upgrade | South Florida Water Management District | Dave Abel | Revere Control Systems, Inc. | $ 985,292 | 97% | 3/31/2021 |
| Y0980 | J. Lawson Blvd Potable Water Re-pump Facilty | Orange County, FL | Dave Abel | CPH/EDA | $ 268,499 | 63% | 3/31/2021 |
| AA0278 | Montgomery Agrarian Center Improvements | City of Montgomery, AL | James Noe | Jacobs Engineering Group | $ 168,000 | 69% | 3/31/2021 |

## MAJOR MUNICIPAL PROJECTS IN PROGRESS

**January 2021**

| Project Name and Number | | Owner | Project Manager | Architect/Engineer | Contract Amount | Percent Complete | Scheduled Complete Date |
|---|---|---|---|---|---|---|---|
| AA0373 | Catoma WPCP Thickening Upgrade | Water Works and Sanitary Sewer Board, City of Montgomery, AL | James Noe | Jacobs Engineering Group | $ 245,000 | 70% | 3/31/2021 |
| AA0693 | East Water Reclamation Facility VFD Upgrades | Bonita Springs Utilities Florida | Nan Johnson | BSU | $ 314,860 | 92% | 3/31/21 |
| AA0650 | Sanderson Farms WTP Brazos County | Sanderson Farms, Inc. Bryan, TX | Jay Wagner | Chas. N. Clark Associates | $ 975,003 | 19% | 4/30/21 |
| AA0650 | TX Bryan Sanderson Farms | Max Foote Construction, LLC-LA | Jay Wagner | | $ 975,003 | 19% | 4/30/2021 |
| Y0487 | Orange Co SCADA 2018 | Orange County Board of Commissioners, FL | Dave Abel | Orange County Utilities District | $ 242,640 | 77% | 6/30/2021 |
| V0862 | Northwest Regional Reclamation Facility Expansion | Board of Commissioners Hillsborough County, FL | Dave Abel | CH2M Hill Engineers | $ 3,083,044 | 96% | 6/30/2021 |
| W0160 | River Oaks Diversion Project | Hillsborough County Public Utilities | Dave Abel | King Engineering Assn | $ 598,802 | 90% | 6/30/2021 |
| Z0161 | Ward WTP Upgrades | City of High Point, NC | Peter Basily | Black & Veatch | $ 358,460 | 84% | 6/30/2021 |
| Z0276 | Montgomery WTP SCADA | City of Montgomery Water Works and Sanitation Board | James Noe | Jacobs Engineering Group | $ 3,948,252 | 56% | 6/30/2021 |
| Y0398 | Central District WWTP Plant 2 | Miami-Dade County, FL | Lance Owens | STANTEC | $ 593,396 | 66% | 6/30/2021 |
| Y0730 | Miami Date North District WWTP Disinfection Facility Improvements | Miami-Dade County Water and Sewer Department | Lance Owens | Brown & Caldwell | $ 184,855 | 87% | 6/30/2021 |
| Z0175 | Bowling Green WTP Expansion | City of Bowling Green, KY | James Noe | Smith Seckman Reid | $ 1,048,742 | 39% | 6/30/2021 |
| Z0670 | Fort Polk South WTP | City of Fort Polk, LA | Jay Wagner | Goodwyn, Mills & Caywood | $ 313,848 | 22% | 6/30/2021 |
| Z0934 | CDWWTP Effluent Pump Station Electrical Improvements | Miami-Dade County Water and Sewer Department | Lance Owens | STANTEC | $ 109,231 | 42% | 6/30/2021 |
| AA0368 | Eastern Water Supply Facility Sodium Hydrochlorite Sysstem Conversion | Orange County, FL | Lance Owens | Tetra Tech | $ 332,340 | 61% | 6/30/2021 |
| AA0586 | BGMU Veterans Memorial | Bowling Green Municipal Utilities Kentucky | James Noe | GRW Engineers | $ 173,593 | 46% | 6/30/21 |
| AA0803 | Murphree WTPFilter Trubidity Analyzer Pane Upgrades | Gainesville Regional Utilities City of Gainesville, FL | James Noe | Gainesville Regional Utilities | $ 167,845 | 29% | 6/30/2021 |
| AA0809 | McCombe WTP Repairs | Sanderson Farms, Inc. McComb, MS | Jay Wagner | Chas. N. Clark Associates | $ 771,260 | 14% | 7/31/2021 |
| Z0522 | South District WWTP Effluent Pump Stations Improvement | Miami-Dade County Water and Sewer Department, FL | Lance Owens | STANTEC | $ 141,509 | 17% | 7/31/2021 |
| AA0645 | FL BSU Generator Improvements | Bonita Springs Utilities | Nan Johnson | Jacobs Engineering Group | $117,736 | 15% | 7/31/2021 |
| AB0009 | FL Pace Water Eff Reuse | J & P Construction Co., Inc. | Lance Owens | Mott MacDonald | $ 333,355 | 5% | 7/31/2021 |
| AA0774 | VT SCADA Upgrade | Pace Water Systems City of Pace, FL | Lance Owens | Revere Control Systems, Inc. | $ 129,480 | 29% | 8/31/2021 |
| AA0774 | Trihedral VTScada HMI Application Upgrade | Pace Water Systems City of Pace, FL | Lance Owens | Pace Water Systems | $ 129,480 | 29% | 8/31/2021 |
| AA0554 | Oak Meadows WSF Well House | Orange County, FL | Shawn Poole | Reiss Engineering | $ 134,273 | 32% | 9/30/2021 |
| AA0475 | Orange County Landfill Cell 11 Bay 17-19 Expansion | Orange County, FL | Shawn Poole | CH2M Hill | $ 240,796 | 16% | 10/31/2021 |
| AA0714 | Misc Pump Station Improvments to PS 25, 31 & 37 | City of Montgomery Water Works & Sanitary Sewer Brd | James Noe | Jacobs Engineering Group | $ 277,016 | 7% | 10/31/21 |
| AA0702 | Sunrise, City of | FL Sunrise Svc 2020-2021 | Shawn Poole | Sunrise, City of | $ 320,000 | 11% | 11/30/2021 |

## MAJOR MUNICIPAL PROJECTS IN PROGRESS

**January 2021**

| Project Name and Number | | Owner | Project Manager | Architect/Engineer | Contract Amount | Percent Complete | Scheduled Complete Date |
|---|---|---|---|---|---|---|---|
| AA0738 | Associated Mechanical Contract | FL Seminole Cty Service | Nan Johnson | Associated Mechanical Contract | $ 142,000 | 11% | 11/30/2021 |
| AA0679 | Village Creek | Jefferson County Environmental Services, Birmingham, AL | Lance Owens | Hazen & Sawyer | $ 170,458 | 20% | 12/31/21 |
| Y0329 | Rock HIll WTP | City of Rock Hill, SC | Peter Basily | Wiedeman & Singleton | $ 3,325,470 | 81% | 12/31/2021 |
| Z0873 | Central District WWTP Oxygen Production Facility | Miami-Dade County Water and Sewer Department | Lance Owens | Wade Trim, Inc. | $ 375,230 | 11% | 12/31/2021 |
| Z0991 | Orange County Water Conserve II Transmission Main Booster PS Improv | Orange County, FL | Nan Johnson | Hazen & Sawyer | $ 519,901 | 69% | 12/31/2021 |
| AA0354 | Iron Bridge Regional WRF | City of Orlando, FL | Shawn Poole | Carollo Engineers | $ 941,510 | 51% | 12/31/2021 |
| AA0599 | Western Reuse Storage & Pumping Facility | Toho Water Authority Kissimmee, FL | Jay Wagner | Tetra Tech | $ 319,404 | 8% | 12/31/21 |
| AA0671 | FL Toho Sunbridge WTP St. Cloud, FL | Toho Water Authority Kissimmee, FL | Shawn Poole | Reiss Engineering | $ 885,659 | 6% | 12/31/21 |
| AA0835 | East Storage Tank & Booster PS/ Treeline Water Storage Pumping Station | City of Ft. Myers, FL | Peter Basily | TKW Consulting Engineers | $ 266,150 | 9% | 12/31/2021 |
| AA0679 | AL JeffCo Village Creek | Mark Johnson Construction, LLC | Lance Owens | Hazen & Sawyer | $ 170,458 | 20% | 12/31/2021 |
| AA0905 | FL Toho Sandhill WRF | Garney Companies, Inc. | Shawn Poole | Carollo Engineers | $ 266,150 | 3% | 12/31/2021 |
| Z0851 | Sweeney WTP GAC Contactors Addition | Cape Fear Public Utilities Authority | Peter Basily | B & V Corporation | $ 446,711 | 15% | 2/28/2022 |
| AB0035 | FL Pace Reclaimed Water | Talcon Group, LLC | Lance Owens | Mott MacDonald | $ 189,100 | 2% | 3/31/2022 |
| AB0113 | FL Manatee SEWRF | TLC Diversified | Dave Abel | Kimley-Horn Assoc. | $ 376,942 | 0% | 6/30/2022 |
| Z1067 | Sludge Thickening and Dewartering Bldgs for Central Dist WWTP & South Dist WWTP | Miami-Dade County Water and Sewer Department | Shawn Poole | Carollo Engineers | $ 3,298,535 | 1% | 12/31/2022 |
| AB0027 | TN Nashville Davidson PS | Cumberland Valley Constructors | Dave Abel | Smith Seckman Reid | $ 495,792 | 4% | 12/31/2022 |
| Z0520 | North District WWTP Secondary Clarifiers and Return Sludge Pump Stations | Miami-Dade County Water and Sewer Department, FL | Lance Owens | CDM Smith | $ 661,289 | 33% | 6/30/2023 |
| Y0127 | Shades Mountain WTP Filter Improvements | Birmingham Water & Wastewater Board | James Noe | Arcadis | $ 1,425,501 | 65% | 6/31/2021 |
| 72 | | | Total Major Projects in Progress | | $ 38,754,397 | | |

SCHEDULE B Please see the attached Major Projects Completed as Schedule B.

PREVIOUS EXPERIENCE (Include ALL Projects Completed within last 5 years)

| Project Name | Owner's Contact Person | Design Engineer | Contract Date | Type of Work | Status | Cost of Work |
|---|---|---|---|---|---|---|
| | Name:<br>Address:<br>Telephone: | Name:<br>Company:<br>Telephone: | | | | |
| | Name:<br>Address:<br>Telephone: | Name:<br>Company:<br>Telephone: | | | | |
| | Name:<br>Address:<br>Telephone: | Name:<br>Company:<br>Telephone: | | | | |
| | Name:<br>Address:<br>Telephone: | Name:<br>Company:<br>Telephone: | | | | |
| | Name:<br>Address:<br>Telephone: | Name:<br>Company:<br>Telephone: | | | | |
| | Name:<br>Address:<br>Telephone: | Name:<br>Company:<br>Telephone: | | | | |
| | Name:<br>Address:<br>Telephone: | Name:<br>Company:<br>Telephone: | | | | |


**Copyright © 2013 National Society of Professional Engineers, American Council of Engineering Companies, and American Society of Civil Engineers. All rights reserved.**

# Revere Control Systems, Inc.
# MAJOR PROJECTS COMPLETED

## Alabama

### January 2021

| RCS Job No. | Project Manager | Owner Project | City/County | ST | Architect/ Engineer | Description | W | WW | Year Complete | Total $ |
|---|---|---|---|---|---|---|---|---|---|---|
| K0274 | Dave Abel | City of Muscle Shoals: WWTP Renovation & SCADA | Muscle Shoals | AL | Garver Engineers | Instrumentation, SCADA, and network communications for WWTP expansion | | X | 2011 | $372,153 |
| G0168 | Gregg Gray | Shelby County Commission: Shelby Co South WTP | Wilsonville | AL | Municipal Consultants | Instrumentation equipment: Five PLC's; RTU's for South, North, and Westover systems; Miscellaneous control panels and workstations | X | | 2011 | $1,712,908 |
| L0399 | Nan Johnson | City of Auburn: HC Morgan WPCF Control Systems | Auburn | AL | Revere Control Systems | Wireless Communications, Network Equipment and Configuration, HMI Application | | X | 2011 | $122,464 |
| K0323 | Dave Abel | West Morgan/East Lawrence Water Authority: Robert M. Hames WTP Improvements | Hillsboro | AL | InSite Engineering | Upgrade and replace main control PLC, replace SCADA PC, add new vendor controls to SCADA PC, add radio based Internet Server | X | | 2011 | $185,542 |
| M0558 M0559 | Nan Johnson | Auburn Water Works Board: James Estes WTF SCADA Replacement | Auburn | AL | Revere Control Systems | PLC Panel design, manufacturing, PLC Programming, HMI Configuration, Startup/Commissioning | X | | 2012 | $186,541 |
| L0930 | Dave Abel | Hanceville Water Works & Sewer Board: Hanceville WWTF Upgrade | Hanceville | AL | Goodwin, Mills & Cawood, Inc. | Instrumentation, SCADA, and network communications for WWTP expansion | | X | 2012 | $213,059 |
| K0765 | Nan Johnson | City of Dothan: Little Choctawhatchee WWTP | Dothan | AL | Polyengineering, Inc. | Field Instrumentation, PLC Control Panels, Network and Computer Equipment, Software, Site Testing and Commissioning | | X | 2012 | $987,596 |
| L0129 | Nan Johnson | City of Orange Beach: Orange Beach Electrical and Controls | Orange Beach | AL | McMillan Engineering Services | Design-Build - Field Instrumentation, MCCs, VFDs, PLC Control Panels, Computer/Network Hardware and Software, PLC and HMI Programming, Startup & Commissioning | | X | 2012 | $2,518,828 |
| M0471 | James Noe | Birmingham Water Works Board: New SCADA Radio Sites | Birmingham | AL | Revere Control Systems | RTU Panels and accessories installed in various sites across Jefferson County to read presssure and flowback to the SCADA System | X | | 2012 | $347,809 |
| M0673 | Dave Abel | Albertville Municipal Utilities Board: Wastewater & Water Meter Telemetry | Albertville | AL | Revere Control Systems | Wastewater plant computer, HMI, Repeater; two lift stations telemetry; three water meter sites telemetry | X | X | 2012 | $171,712 |
| M0860 | Nan Johnson | Auburn Water Works Board: WTP Well No 3 | Auburn | AL | Bayfour Design (Electrical) Baskerville-Donovan (Mechanical) | PLC/RTU Control Panel for Well, Wireless and Network Communications, PLC Programming, HMI Configuration, Startup & Commissioning | X | | 2012 | $119,582 |

| RCS Job No. | Project Manager | Owner Project | City/County | ST | Architect/ Engineer | Description | W | WW | Year Complete | Total $ |
|---|---|---|---|---|---|---|---|---|---|---|
| K0432 | James Noe | Birmingham Water Works & Sewer Board: Shades Mountain WTP Phase II | Birmingham | AL | Malcolm Pirney | Professional Services - PLC Control Panels, Computer/Network Hardware, Testing | X | | 2012 | $1,225,933 |
| N0372 | Gregg Gray | Arley Water Works Board: Water Upgrade | Arley | AL | Revere Control Systems | Professional Services - PLC Control Panels, Computer/Network Hardware and Software, PLC and HMI Programming, Startup & Commissioning | X | | 2012 | $104,285 |
| M0467 | Dave Abel | City of Florence, AL: Cypress Creek WWTP SCADA Improvements | Florence | AL | Municipal Consultants | Upgraded system of the I/A Series© control system at Cypress Creek WWTP | | X | 2013 | $389,100 |
| M0244 | Don Dean | City of Marbury, AL: Marbury System Modifications | Marbury | AL | Sherlock, Smith & Adams | Continuing SCADA Support Services as requested by the Owner | X | | 2013 | $107,057 |
| M0799 | Nan Johnson | City of Enterprise, AL: Enterprise Telemetry | Enterprise | AL | Polyengineering, Inc. | Field Instrumentation, RTU Control Panels, PLC Programming, HMI Configuration, Radio Configuration, Startup and Commissioning | X | | 2013 | $114,081 |
| N0084 | Nan Johnson | City of Auburn, AL: HC Morgan WPCF Improvements | Auburn | AL | CH2M Hill | Field Instrumentation, PLC Control Panels, PLC Programming, HMI Configuration, Startup and Commissioning | | X | 2013 | $239,785 |
| P0252 | James Noe | Jefferson County Commission: Valley Creek Hardware | Bessemer | AL | Revere Control Systems | Hardware for PLC and SCADA upgrade at the Dewatering Facility | | X | 2013 | $112,931 |
| N0739 | Nan Johnson | Auburn Water Works Board: James Estes WTP Clearwell 4 | Auburn | AL | Barge, Waggoner, Sumner & Cannon | PLC Control Panels, PLC Programming, HMI Configuration, Network Infrastructure (Fiber), Installation/Coordination, Startup & Commissioning | X | | 2013 | $263,396 |
| P0104 | James Noe | Trussville Utilities Board: Trussville Water System Telemetry | Trussville | AL | Revere Control Systems | RTU Panels, Cellular Communications, PLC Programming, HMI Configuration, Installation, Startup & Commissioning, Training, Continuing Support | X | | 2014 | $215,566 |
| P0105 | James Noe | Trussville Utilities Board: Trussville Gas System Telemetry | Trussville | AL | Revere Control Systems | RTU Panels, Cellular Communications, PLC Programming, HMI Configuration, Installation, Startup & Commissioning, Training, Continuing Support | - | - | 2014 | $215,566 |
| R0223 | James Noe | Auburn Water Works Board: Lift Station Improvements | Auburn | AL | Revere Control Systems | RTU Panels, Radio Communications, PLC Programming, HMI Configuration, Installation, Startup & Commissioning, Training, Continuing Support | X | | 2014 | $166,326 |
| P0674 | James Noe | Auburn Water Works Board: Lake Ogletree Raw Water Pump Station | Auburn | AL | CH2M Hill | PLC Control Panels, PLC Programming, HMI Configuration, Startup & Commissioning, Owner Training | X | | 2015 | $160,590 |
| R0171 | James Noe | Auburn Water Works Board: Lift Station Improvements | Auburn | AL | Revere Control Systems | Upgraded hardware and software for the Radio, PLC and SCADA systems, Startup & Commissioning, Owner Training | | X | 2015 | $232,613 |
| N0674 | James Noe | Marshall Space Flight Center: East Area Industrial Water System | Huntsville | AL | Barge, Waggoner, Sumner & Cannon | Industrial water distribution revitalization project: SCADA, Control Panels, Field Equipment, Project Management, Engineering, PLC/HMI Programming, Startup, Training | X | | 2016 | $582,584 |

| RCS Job No. | Project Manager | Owner Project | City/County | ST | Architect/ Engineer | Description | W | WW | Year Complete | Total $ |
|---|---|---|---|---|---|---|---|---|---|---|
| U0156 | James Noe | Montgomery Water Works and Sanitary Sewer Board: Montgomery Pump Station | Montgomery | AL | CH2M Hill | PLC hardware, Field Instrumentation, Telemetry RTU Equipment, PLC Programming, Network Equipment, HMI Configuration, Startup & Commissioning, Training | | X | 2017 | $148,897 |
| V0592 | Nan Johnson | West Morgan/East Lawrence Water Authority: W Morgan/E Lawrence WTP SCADA | Hillsboro | AL | Insite Engineering | Provided SCADA System modifications for Temporary PFOA and PFOS Treatment System, including PLC Programing, modification of the existing Wonderware HMI application, PLC control panel, communications, startup, support | X | | 2017 | $135,645 |
| W0007 | Gregg Gray | Dothan Utilities: Little Choctawhatchee WWTP SCADA Upgrade | Dothan | AL | Revere Control Systems | SCADA System Upgrades: new server hardware with virtualization, client workstations, software upgrades, installation services, testing, documentation, start-up assistance, owner training, technical assistance | | X | 2017 | $117,382 |
| V0488 | James Noe | Jefferson County Environmental Services: Cahaba River/Trussville WWTP Improvements Phase II | Trussville | AL | CDM Smith | Instrumentation & Controls Package: new PLCs, RTUs, Control Panels, modification of existing control panels, computer system migration to new control system, field instrumentation and calibration, testing, training | | X | 2019 | $1,491,373 |
| W1059 | Gregg Gray | City of Piedmont, AL: Piedmont WTP Upgrade | Piedmont | AL | Utility Engineering Consultants | Radio System Upgrade, Field Instrumentation, PLC Programming, HMI Configuration | X | | 2019 | $195,404 |
| Y0653 | Lance Owens | Childersburg Water Sewer & Gas: Telemetry Improvements | Childersburg | AL | Revere Control Systems | Pump Control Panels with Operator Interface Terminals, Cellular Communications and Centralized HMI Application Development | X | | 2019 | $124,839 |
| Y0225 | James Noe | Montgomery Water Works & Sanitary Sewer Board: CT Perry WTP Filters 1-8 Automation Upgrades | Montgomery | AL | CH2M Hill | Instrumentation & Control for process systems and fiber optic communciations system: project management, programming, filter control panels, field equipment, on-site services, training | X | | 2019 | $354,232 |
| Y0299 | James Noe | Jefferson County Environmental Services: Minor Parkway Pump Station Improvements | Birmingham | AL | CH2M Hill | Field Instrumentation, Control Panels, PLC Programming, HMI Programming, Startup & Commissionin | | X | 2020 | $399,640 |
| Y0437 | Lance Owens | City of Cullman: Cullman WTP SCACA Communication & Fiber System | Cullman | AL | Goodwin, Mills & Cawood, Inc. | Updated all WTP PLCs to CompactLogix, Provided New Chemical Building PLC Control Panel, Replaced DH+ Comms with Fiber, Replaced 4 panels in pipe galleries, Provided New Workstations, and added New Chemical Building elements and Flash Mixers to SCADA. | X | | 2020 | $818,037 |

| RCS Job No. | Project Manager | Owner Project | City/County | ST | Architect/ Engineer | Description | W | WW | Year Complete | Total $ |
|---|---|---|---|---|---|---|---|---|---|---|
| W1044 | James Noe | Jefferson Cty Environmental Services, Valley Creek | Jefferson County | AL | Hazen & Sawyer | SCADA and PLC for Process Optimization Improvements; Field Instrumentation, Control Panels, PLC Programming, HMI Programming, Training, Startup & Commissioning | | X | 2020 | $1,951,358 |
| Z0807 | James Noe | Montgomery Water Works & Sanitary Sewer Board: Montgomery Pump Station Improvements (PS 2 & 33) | Montgomery | AL | Jacobs Engineering Group | Pump Station Improvements project, including new PLC panels, new Pump Control panels, Field Instruments, and SCADA updates | | X | 2020 | $174,982 |
| Y0683 | James Noe | City of Alexander City Adams WTP SCADA Improvements | Alexander City | AL | CH2M Hill | WTP SCADA Upgrade, Updated all WTP PLCs with 3 new PLCs, PLC programming and HMI programming | X | | 2020 | $156,077 |
| Z0127 | James Noe | Jefferson Cty Environmental Services Jefferson County Improvements | Jefferson County | AL | Revere Control Systems | Electrical & Process Improvements; Field Instrumentation, Control Panels, PLC Programming, HMI Programming, Training, Startup & Commissioning | | X | 2020 | $609,140 |

# Revere Control Systems, Inc.
# MAJOR PROJECTS COMPLETED

## Arizona

### January 2021

| RCS Job No. | Project Manager | Owner/Project | City/County | State | Architect/ Engineer | Description | W | WW | Year Complete | Total $ |
|---|---|---|---|---|---|---|---|---|---|---|
| L0610 | Nan Johnson | Pima County Water Reclamation Department Ina Road WRF | Pima County | AZ | CH2M Hill | Field Instrumentation, Control Panels, Design, Factory Testing, Startup/Commissioning | | X | 2014 | $3,882,344 |

# Revere Control Systems, Inc.
# MAJOR PROJECTS COMPLETED

## Colorado

### January 2021

| RCS Job No. | Project Manager | Owner/Project | City/County | State | Architect/ Engineer | Description | W | WW | Year Complete | Total $ |
|---|---|---|---|---|---|---|---|---|---|---|
| U0082 | James Noe | Coca Cola Refreshments: Effluent Monitoring Systems Phase II | Denver | CO | MWH Americas | Furnished, programmed and installed a new PLC Control Panel to control the Effluent pH Neutralization control Project Management, Engineering, PLC/HMI/SCADA Programming, Field Equipment, Installation, Testing, Onsite Services, Training | | X | 2017 | $277,713 |
| Y0581 | Jay Wagner | City of Greeley, CO: Greeley Water Polution Control Facility Blower Replacement | Greeley | CO | STANTEC | Upgraded Blower Control Panel PLC from Allen-Bradley PLC 5 to ControlLogix. Implemented very sophisticated blower control logic at PLC and updated iFix SCADA for new blower controls and addition of new blowers. | | X | 2020 | $24,937 |

# Revere Control Systems, Inc.
# MAJOR PROJECTS COMPLETED

## Florida

### January 2021

| RCS Job No. | Project Manager | Owner/Project | City/County | State | Architect/ Engineer | Description | W | WW | Year Complete | Total $ |
|---|---|---|---|---|---|---|---|---|---|---|
| K0622 | Nan Johnson | City of Sunrise<br>Annual Maintenance Contract | Sunrise | FL | Revere Control Systems, Inc. | Preventative maintenance; equipment repair, maintenance, and calibration services for metering devices for wasterwater plants, water plants, and lift stations; corrective work; master plan for SCADA controls as well as replacement and repair; computers, accessories and software repair and replacement; professional services for SCADA controls, enhancements, upgrades and expansion for wasterwater and water systems, as needed | X | X | 2011 | $595,699 |
| K0074 | Derick Lamar | Pinellas County Board of Commissioners<br>Reclaimed Water Interrupt Service | Pinellas County | FL | McKim & Creed | Reclaim Water Monitoring and Storage Pon Valve Control RTUs with Motorola ACE CPU. Instrumentaiton included Level, Flow, and Pressure. | | X | 2011 | $166,038 |
| L0205 | Mitchel Gibbs | Bonita Springs Utilities<br>Snell Lane Ground Storage Tank | Bonita Springs | FL | CH2M Hill | Instrumentation including analytical devices, magmeters, and pressure transmitters, 1 x NEMA 12 Control Panel with A-B PLC, limited spares, and an alternate pressure valve | X | | 2011 | $115,639 |
| J0473 | Nan Johnson | Polk County Board of County Commissioners<br>Oak Hills/Providence WPF | Loughman | FL | Post Buckley, Schub & Jernigan, Inc. | Pressure instrumentation; three Motorola well RTU panels; master interface control panel; two SCADA servers and one historical server with workstation; programming for Motorola radio communication, Motorola PLC logic, and Trihedral VTSCADA HMI configuration; field testing, startup, and commissioning services | X | | 2011 | $480,962 |
| K0379 | Nan Johnson | Florida Power & Light<br>Loxahatchee East WRF | West Palm Beach | FL | Jordan, Jones & Goulding | Field instrumentation; design and manufacture of three chemical tank level control panels, twelve motor operated valve control panels, and one PLC Control Panel (Siemens S7-300); one workstation with HMI Software (iFix); fiber optic cable; field testing, startup, and commissioning services | | X | 2011 | $474,995 |
| H0567 | Nan Johnson | Tohopekaliga Water Authority<br>Stoneybrook South Rapid Infiltration Basin Telemetry | Longwood | FL | Franklin Heart & Reid | Field Instrumentation, RTU Panels, PLC Programming, HMI Configuration, Field Checkout & Startup | X | | 2011 | $229,201 |
| K0278 | Nan Johnson | Desoto County, FL:<br>Desoto Correctional Institute | Desoto County | FL | Intertate Engineering | Field Instrumentation, PLC Control Panels, Startup & Commissioning Services | X | | 2011 | $148,351 |

| RCS Job No. | Project Manager | Owner/Project | City/County | State | Architect/ Engineer | Description | W | WW | Year Complete | Total $ |
|---|---|---|---|---|---|---|---|---|---|---|
| L0729 | Nan Johnson | City of Sunrise, FL:<br>Sunrise Maintenance Contract | Sunrise | FL | Revere Control Systems, Inc. | SCADA Maintenance Services – Field Instrument Calibrations, Network Equipment and Maintenance | X | X | 2011 | $361,939 |
| L0115 | Nan Johnson | City of Boca Raton, FL:<br>Final Clarifier Refurbishments and Improvements | Boca Raton | FL | Hazen & Sawyer | Field Instrumentation, PLC Panel Modifications, Programming, Startup & Commissioning Services | | X | 2011 | $104,492 |
| M0474 | James Noe | Collier County, FL:<br>North County Regional WTP Phase I PLC I/O Replacement | Naples | FL | AECOM Technical Services | Project Management and Engineering Services; Software Configuration and Programming; Testing; Onsite Services/Installation; Training | X | | 2012 | $150,000 |
| M0824 | James Noe | Collier County, FL:<br>North County Regional WTP Phase II PLC I/O Replacement | Naples | FL | AECOM Technical Services | Project Management and Engineering Services; Software Configuration and Programming; Testing; Onsite Services/Installation; Training | X | | 2012 | $139,623 |
| L0602 | Dave Abel | Seminole County, FL:<br>Regional WTF at Yankee Lakes | Seminole County | FL | Revere Control Systems, Inc. | Furnish and commission instruments, control panels, and add statu and control programming to existing Wonderware SCADA System | | X | 2012 | $145,236 |
| M0227 | Nan Johnson | City of Tampa, FL:<br>Sulphur Springs Upper Weil & Pump Station | Tampa | FL | CH2M Hill | Field Instrumentation, Control Panels, PLC Programming, HMI Configuration, Site Testing and Commissioning | X | | 2012 | $185,951 |
| K0641 | Dave Abel | Seminole County, FL:<br>Lake Mary Greewood Lakes WRF | Seminole County | FL | Reiss Environmental | Furnish instrumentation, Motorola PLC panels, PLC programming and additions to existing Seminole SCADA system for plant upgrades | | X | 2012 | $606,467 |
| L0756 | Jeff Grove | City of West Palm Beach Utilities Department:<br>WTP Automation Improvements | West Palm Beach | FL | Jordan Jones & Goulding | RIO Panels, field instrumentation, insallation | X | | 2012 | $1,451,282 |
| M0029 | Dave Abel | Seminole County, FL:<br>Yankee Lakes WRF Phase 2A | Seminole County | FL | AECOM Engineering Corporation | Furnished instrumentation, Motorola PLC panels, PLC programming and additions to existing Seminole SCADA system for plant upgrades | | X | 2012 | $500,731 |
| M0705 | Nan Johnson | City of Sunrise, FL:<br>Sunrise Maintenance Contract | Sunrise | FL | Revere Control Systems, Inc. | SCADA Maintenance Services – Field Instrument Calibrations, Network Equipment and Maintenance | X | X | 2012 | $511,440 |
| L0648 | Dave Abel | Seminole County<br>Envirnomental Services:<br>Indian Hills WTP Improvements | Seminole County | FL | Malcolm Pirnie | Provided instruments, Motorola CP and alarm panels, PLC and SCADA programming for effluent pumping and chemical treatment | X | | 2013 | $107,878 |
| M0450 | Dave Abel | Polk County Board of County Commissioners:<br>New Mann Road WPF & Palmore Well Interconnect | Polk County | FL | Chastaine-Skillman, Inc. | Provided instruments, (1) Motorola CP, (1) remote well I/O, PLC and SCADA programming for station pumping and tank level controls | X | | 2013 | $204,677 |
| N0489 | James Noe | Board of County Commissioners:<br>North County WTP IO Replacement-Ph III | Collier County | FL | AECOM Technical Services | Project Management and Engineering Services; Software Configuration and Programming; Testing; Onsite Services/Installation; Training | X | | 2013 | $143,396 |

| RCS Job No. | Project Manager | Owner/Project | City/County | State | Architect/ Engineer | Description | W | WW | Year Complete | Total $ |
|---|---|---|---|---|---|---|---|---|---|---|
| N0879 | James Noe | Board of County Commissioners: Collier County NCRWTP I/O Replacement Phase IV | Collier County | FL | AECOM Technical Services | Project Management and Engineering Services; Software Configuration and Programming; Testing; Onsite Services/Installation; Training | X | | 2013 | $104,717 |
| M0366 | Dave Abel | City of St. Petersburg: St. Pete Northeast WRF | St. Petersburg | FL | Revere Control Systems, Inc. | Replaced 4 filter operator stations and main CP. Relocated junction boxes from flood area; replace rusted conduit & wire | X | | 2013 | $146,474 |
| N0737 | Mike Coomler | City of Sunrise: Maintenance Contract 2012-2013 | Sunrise | FL | Revere Control Systems, Inc. | SCADA Maintenance Services – Field Instrument Calibrations, Network Equipment and Maintenance | X | X | 2013 | $500,000 |
| P0040 | Julie Keller | Polk County Board County Commissioners: Hodge Street WPF | Polk County | FL | Tetra Tech | Field Instrumentation, Control Panels, Design, PLC & OIT Programming, Startup/Commissioning | X | | 2014 | $109,387 |
| P0201 | Arthur Thomas | Seminole County Envirnomental Services: Pump Station Upgrades | Seminole County | FL | CH2M Hill | SCADA RTU Control Panels, Startup Services | | X | 2014 | $178,330 |
| P0424 | Mike Coomler | City of Sunrise: Springtree WTP and Sawgrass WWTP Flowmeter Replacement | Sunrise | FL | Revere Control Systems, Inc. | Replacement of Venturi Flowmeters with Magnetic Flowmeters – Installation and Startup | X | | 2014 | $220,080 |
| P0740 | Nan Johnson | City of Sunrise: SCADA Maintenance | Sunrise | FL | Revere Control Systems, Inc. | SCADA Support and Maintenance; Replacement of Field Instrumentation including Flowmeters, Valves, etc. | X | | 2014 | $581,311 |
| N0731 | Nan Johnson | Seminole County Environmental Services: County Club WTP | Seminole County | FL | Reiss Engineering | Field Instrumentation, PLC Control Panels, PLC Programming, HMI Configuration, Startup & Commissioning, Owner Training | X | | 2014 | $1,772,169 |
| N0397 | Jeff Grove | City of West Palm Beach: WTP Electrical/Generator Building | West Palm Beach | FL | MWH | Field instrumentation, control panels, programming for a new generator building added to their facility | X | | 2015 | $165,388 |
| N0736 | Nan Johnson | City of Boca Raton, FL: Boca Raton WTP SCADA Upgrade | Boca Raton | FL | CDM Smith | Field Instrumentation, PLC Hardware and Control Panel Upgrades/Modifications, HMI Upgrade, Standardization of Tagname Conventions, Startup/Commissioning, Training | X | | 2015 | $1,895,187 |
| R0186 | James Noe | City of Gainesville, FL: GRU Murphree WTP | Gainesville | FL | CH2M Hill | Upgraded hardware and software on the PLC and SCADA, Startup & Commissioning, Owner Training | X | | 2015 | $776,721 |
| P0927 | Nan Johnson | Seminole County, FL: Seminole County Wastewater Pump Station Radio-RTU Cellular Conversion | Sanford | FL | Atkins North America | RTU Upgrades, HMI Application Development, Cellular Modem/Communications, 300 Remote Sites | | X | 2015 | $2,081,124 |
| R0323 | Arthur Thomas | City of Orlando, FL: Lift Station Improvements | Orlando | FL | TetraTech/EDA | Field Instrumentation, Lift station Control Panels, Spare Parts, Engineering Design, Production, Factory Testing, Startup/Commissioning | | X | 2015 | $149,200 |
| P0016 | Nan Johnson | Miami-Dade County Water & Sewer Department: South District WWTP Cogen Project | Miami-Dade County | FL | Brown & Caldwell | Field Instrumentation, PLC Control Panel, PLC Programming, HMI Configuration, Factory Testing, Field Testing, Startup & Commissioning | | X | 2015 | $720,236 |

| RCS Job No. | Project Manager | Owner/Project | City/County | State | Architect/ Engineer | Description | W | WW | Year Complete | Total $ |
|---|---|---|---|---|---|---|---|---|---|---|
| R0738 | Joey Didona | City of Sunrise, FL:<br>SCADA Maintenance Contract 2014-2015 | Sunrise | FL | City of Sunrise | Instrumentation, controls, SCADA, and data management services | X | X | 2015 | $366,298 |
| R0881 | Joey Didona | City of West Palm Beach, FL:<br>West Palm Beach SCADA Services | West Palm Beach | FL | Santis Engineering | Installation, programming, modifications and repair of HMI, operating systems, hardware modifications, and scheduled maintenance to ensure reliable operation of the City's WTP instrumentation system. | X | | 2015 | $147,518 |
| P0794 | Nan Johnson | Ashland Chemical, Inc.:<br>Chemical Groundwater Recovery System | Orlando | FL | Arcadis | Instrumentation, Pump Control Panel, PLC Control Panel, PLC Programming, OIT Configuration, Remote Communications, Startup & Commissioning | X | | 2015 | $131,085 |
| R0503 | Dave Abel | City of Altamonte Springs:<br>A-First Reuse Augmentation Facility | Altamonte Springs | FL | Tetra Tech | Provided control panels and instruments at SW pump station, RAF and flow valve sites. Programming by Owner's rep. and Central SCADA by Owner | X | | 2016 | $306,267 |
| U0335 | Nan Johnson | Bonita Springs Utilities:<br>EWRF Screens and Membrane Replacement | Bonita Springs | FL | CH2M Hill | PLC hardware, PLC programming, HMI Configuration, Startup/Commissioning | | X | 2016 | $115,310 |
| P0402 | James Noe | St. Johns County Utility Department:<br>Northwest WWTP Phase I | St. Augustine | FL | CDM Smith | Design, PLC Hardware, Local Control Panel Hardware, Field Equipment, SCADA / Networking Hardware, Startup Services | | X | 2016 | $622,232 |
| R0897 | Dave Abel | Orange County Utilities:<br>East Service Area Potable Water & Reclaimed Storage & Repump | Orlando | FL | Reiss Engineering | Design, PLC Panels, Field Instruments, PLC and OIT Programming, Startup Services | X | X | 2016 | $405,990 |
| U0502 | Dave Abel | Brevard County, FL:<br>Barefoot Bay WTP Improvements | Barefoot Bay | FL | Wade Trim, Inc. | Design, PLC and Local Panels, Field Instruments, PLC, OIT and SCADA Programming, Startup Services | X | | 2016 | $214,834 |
| U0708 | Nan Johnson | Bonita Springs Utilities:<br>BSU I&C for Wells 33, 34, and 35 | Bonita Springs | FL | CH2M Hill | Design, PLC Hardware, PLC Programming, HMI Configuration, Startup Services | X | | 2016 | $194,823 |
| R0761 | Dave Abel | Seminole County Board of Commissioners:<br>Pump Station Upgrades | Lake Mary | FL | CHP Corp | Furnished control panels and equpiment for six Lift Stations | | X | 2016 | $254,858 |
| U0511 | Joey Didona | West Palm Beach:<br>SCADA Services Amendment 2 | West Palm Beach | FL | Santis Engineering | Design of Standard RTU and Pump Control Panels, Development of Standard VTScada HMI Application and RTU Control Logic | | X | 2016 | $266,678 |
| U0809 | Joey Didona | City of Sunrise, FL<br>Sunrise Maintenance 2016-2016 | Sunrise | FL | Revere Control Systems, Inc. | SCADA Maintenance Support Services including Field Calibrations, Instrument Maintenance, System Support and Configuration | X | X | 2016 | $264,973 |
| U0735 | James Noe | TOHO Water Authority:<br>Harmony WWTP Expansion | St. Cloud | FL | Wharton-Smith | PLC hardware, Field Instrumentation, PLC Programming, Network Equipment, HMI Configuration, Startup & Commissioning, Training | | X | 2016 | $570,830 |

| RCS Job No. | Project Manager | Owner/Project | City/County | State | Architect/ Engineer | Description | W | WW | Year Complete | Total $ |
|---|---|---|---|---|---|---|---|---|---|---|
| R0676 | Nan Johnson | Hialeah Water:<br>Hialah RO WTP Support Services | Hialeah | FL | AECOM Technical Services | Support Services to assist Plant Operations and Maintenance with control system modifications and updates | X | | 2017 | $280,843 |
| U0777 | Dave Abel | City of Boca Raton:<br>Sodium Hydroxide Tanks Replacement & Chemical System Imprvmnts | Boca Raton | FL | McCafferty Brinson Consulting | 3 PLC-based VFD panels, instrumentation, PLC programming and instrument commissioning to upgrade chemical systems | X | | 2017 | $230,603 |
| V0705 | Gregg Gray | Ave Maria Utility Company:<br>Ave Maria PLC Upgrade | Ave Maria | FL | Revere Control Systems, Inc. | PLC Improvements Project - Replaced Six (6) SLC500 PLCs and 1746 IO modules with six (6) CompactLogix PLCs and 1769 IO modules. Re-configured HMI Driver and Test | X | | 2017 | $153,510 |
| M0586 | Jeff Grove | Hialeah Water:<br>Reverse Osmosis Water Treatment Facility | Hialeah | FL | AECOM Technical Services | SCADA systems, RO skid control panels, CIP system control panel, chemical storage and feed systems control panels, lime system control panel, degasifier control panel, engineering, PLC/HMI programming, instrumentation, communications, installation, start-up | | | 2017 | $1,440,351 |
| M0743 | Joey Didona | Hillsborough County Board of Commissioners:<br>SCADA Phase II | Tampa | FL | Arcadis | Numerous WW lift stations in Hillsborough County requiring RTUs, with programming | | X | 2017 | $1,160,088 |
| R0193 | Dave Abel | Miami-Dade County<br>Water & Sewer Department:<br>Miami-Dade Master Pump Station 3 | Miami | FL | MWH Americas, Inc. | PLC CP, local control stations, instrumentation, PLC programming and instrument commission for major pump station | | X | 2017 | $354,953 |
| U0586 | Dave Abel | Seminole County, FL:<br>Pump Station Improvements | Seminole County | FL | CPH Engineers, Inc. | Engineering Design & Implementation – Field Instrumentation, PLC Control Panels, Network Infrastructure, HMI Application, Startup & Commissioning | | X | 2017 | $240,566 |
| U0344 | Joey Didona | South Florida Water Mgmt District:<br>SFWMD S-127 General Contract | Glades, Martin, & Okeechobee Counties | FL | SFWMD | General Contractor responsibilities of Five (5) Storm Water Pumping Facilities with PLC Panels and Telemetry Towers | X | | 2017 | $3,345,192 |
| U0345 | Dave Abel | South Florida Water Mgmt District:<br>SFWMD S-127 Control Center | Glades, Martin, & Okeechobee Counties | FL | SFWMD | I&C Support of U0344 GC: Furnished CP's, Instrumentation, SCADA and Network H/W and S/W, Programming for Central Control of 5 Okeechobee North Shore PS's | X | | 2017 | $2,841,499 |
| U0251 | Arthur Thomas | City of Orlando:<br>Lift Station Electrical Upgrades | Orlando | FL | Tetra Tech | Project Management, Engineering, Hardware and Start-up Services to provide process instrumentation and controls and electrical upgrades to 15 lift stations for the City of Orlando | | X | 2017 | $964,936 |
| U0935 | Dave Abel | City of Melbourne:<br>RO Booster Pumps VFD Improvements | Melbourne | FL | CH2M Hill | I&C Process Systems, Project Management, Engineering, PLC/OIT/HMI Programming, Onsite Services, Documentation, Training | X | | 2017 | $132,398 |

| RCS Job No. | Project Manager | Owner/Project | City/County | State | Architect/ Engineer | Description | W | WW | Year Complete | Total $ |
|---|---|---|---|---|---|---|---|---|---|---|
| V0195 | James Noe | City of Miramar:<br>West WTP PLC Replacement | Miramar | FL | Revere Control Systems, Inc. | Replacement of the existing SCADA system with a new Allen Bradley Controllogix PLC Platform | X | | 2017 | $583,134 |
| V1039 | Dave Abel | Seminole County Board of Commissioners:<br>Greenwood Lakes Motorola MOSCAD Replacements | Seminole County | FL | Revere Control Systems, Inc. | Project management, engineering design & implementation, PLC and HMI programming, CAD drawings, functional checkout, documentation, field repair, installation, and testing | | X | 2017 | $119,120 |
| V1023 | Nan Johnson | Bonita Springs Utilities:<br>BSU West Water Reclamation Facility PLC Upgrade | Bonita Springs | FL | Revere Control Systems, Inc. | Upgrade/Replacement of PLC Hardware, Conversion of PLC Control Logic, Startup & Commissioning | | X | 2017 | $227,834 |
| U0980 | Dave Abel | Seminole County Board of Commissioners:<br>Landfill Leachate System Telemetry | Seminole County | FL | Revere Control Systems, Inc. | SCADA System Replacement, Instrument and Control Panel Improvements, HMI Sub-system, Programming, SCADA Hardware, Antenna Tower Installation, Onsite Testing, Onsite Training | | X | 2017 | $404,674 |
| V0817 | Joey Didona | City of Sunrise, FL:<br>SCADA Maintenance Contract 2016-2017 | Sunrise | FL | Revere Control Systems, Inc. | SCADA Maintenance, Instrument Calibrations, Upgrade of Instrumentation, Design/Replacement of Various Control Panels | X | X | 2017 | $199,251 |
| W0009 | Joey Didona | Polk County Board of County Commissioners:<br>Lift Station SCADA Improvements | Winter Haven | FL | AECOM Technical Services | Lift Station Electrical/SCADA Upgrades; Design/Replacement of Control Panels | | X | 2018 | $519,413 |
| V0800 | Joey Didona | Seminole County, FL:<br>Greenwood Lakes WRF Rehab | Lake Mary | FL | EMI Consulting Specialties | PLC Control Panels, Engineering, Ethernet Communications, Fiber Optic Panels, Instrumentation and Calibration, Start-up Services, Testing, Training, Warranty | | X | 2018 | $173,444 |
| W0974 | Nan Johnson | Bonita Springs Utilities:<br>BSU WTP PLC-B | Bonita Springs | FL | Revere Control Systems, Inc. | Replaced existing Filter Control Panel with equal panel using the current equivalent AB PLC platform, ControlLogix; work included providing panel drawings, PLC programming and testing, installation, and validation of the installed system | X | | 2018 | $185,041 |
| V0049 | Joey Didona | City of Sunrise:<br>Springtree Wellhead Improvements | Sunrise | FL | Malcolm Pirnie | Provided SCADA and field service instrumentation for seven (7) wells | X | | 2018 | $232,502 |
| V0541 | Dave Abel | City of Altamont Springs:<br>RWRF Headworks Improvement | Altamont Springs | FL | Atkins Engineering | Furnished one (1) PLC control panel, modified existing panel, field instruments, fiber optic and central SCADA modifications | | X | 2018 | $246,187 |
| V0626 | Dave Abel | City of Orlando:<br>Orlando Lift Station 5 Replacement | Orlando | FL | Brown & Caldwell | Furnished lift station PLC control panel per Orlando standards, instruments, startup | | X | 2018 | $139,828 |

| RCS Job No. | Project Manager | Owner/Project | City/County | State | Architect/ Engineer | Description | W | WW | Year Complete | Total $ |
|---|---|---|---|---|---|---|---|---|---|---|
| U1033 | Dave Abel | Miami-Dade County:<br>North District WWTP Pretreatment/ Sludge Transfer Rehabilitation Headworks Upgrade | Miami-Dade County | FL | Brown & Caldwell | Local control panels, project management, testing, training, instrumentation equipment | | X | 2018 | $698,757 |
| V0933 | Nan Johnson | City of West Palm Beach:<br>WPB WTP SCADA Services | West Palm Beach | FL | Revere Control Systems, Inc. | Support Services for the WTP SCADA Control System | X | | 2018 | $108,352 |
| W0466 | Joey Didona | Seminole County, FL:<br>Yankee Lakes WRF Renewal & Rehab | Sanford | FL | Hazen & Sawyer | Modifying PLC panels with PLC programing and HMI Programing | | X | 2018 | $329,813 |
| W0737 | James Noe | St Petersburg, FL:<br>Northwest WRF Effluent Filters & Injection Well Improvements | St. Petersburg | FL | AECOM Technical Services | Furnish two (2) new PLC panels, field instruments, fiber, programming services, and SCADA integration for Effluent Filters and Injection Well. | | X | 2018 | $278,257 |
| W0916 | Joey Didona | City of Sunrise, FL:<br>SCADA Maintenance 2017-2018 | Sunrise | FL | Revere Control Systems, Inc. | SCADA Equipment Maintenance for waste water plants, water plants, wells, and Lift Stations | X | X | 2018 | $209,240 |
| W0751 | Nan Johnson | West Palm Beach, FL:<br>Lift Station RTU Panels | West Palm Beach | FL | Revere Control Systems, Inc. | Assemble, Test, Install & Commission Ten (10) SCADA RTU Panels with HMI Application Integration | | X | 2018 | $297,876 |
| V0346 | Dave Abel | Mantee County:<br>Manatee County WTP BTU | Brendenton | FL | McKim & Creed | Furnished and integrated filter control panels and instrumentation for water treatment plant expansion | X | | 2019 | $734,313 |
| U0973 | Dave Abel | City of Boca Raton:<br>Glades Road WTP Residuals System & Ancillary Improvements | Boca Raton | FL | CDM Smith | New PLC and RTU, Instrumentation, Modify existing PLC's, Update central SCADA for Ancillary Plan Improvements | X | | 2019 | $276,063 |
| W0262 | Nan Johnson | Bonita Springs Utilities:<br>Bonita Springs Network Upgrade | Bonita Springs | FL | Revere Control Systems, Inc. | Design & Implementation for SCADA Network and Interfacing with the Owner's Overall City-Wide Network System including hardware and configuration services | X | X | 2019 | $632,022 |
| W0277 | Joey Didona | City of Bradenton, FL:<br>ASR-2 System | Bradenton | FL | Jones Edmunds & Associates | Field Instrumentation, PLC Control Panel, PLC Programming, OIT/HMI Programming, Startup & Commissioning | X | | 2019 | $209,387 |
| W1172 | Joey Didona | Orange County, FL:<br>NWRF Reuse Water Storage Improvements | Orlando | FL | Hazen & Sawyer | Field Instrumentation, Pump Control Panel, PLC Programming, HMI Programming, Startup & Commissioning | | X | 2019 | $151,762 |

| RCS Job No. | Project Manager | Owner/Project | City/County | State | Architect/ Engineer | Description | W | WW | Year Complete | Total $ |
|---|---|---|---|---|---|---|---|---|---|---|
| Y0895 | Lance Owens | Toho Water Authority:<br>Cypress West WRF Upgrade and Expansion and Biosolids Dewatering | Kissimee | FL | Tetra Tech | Provided Dewatering PLC control panel that marshals communication between the Macerator Controls, the Polymer Skids, the Centrifuges and the conveyer system for truck loading of dewatered solids; provided Flowmeters and Pressure Instruments for the process equipment | | X | 2019 | $188,098 |
| Y1110 | James Noe | City of St. Petersburg:<br>Northwest Water Reclamation Facility Improvement with Existing Injection Well Upgrades | St. Petersburg | FL | CH2M Hill | Furnished PLC panels, instrumentation equipment, programming/software configuration, testing, training, startup and calibration services | | X | 2019 | $103,234 |
| W0694 | Dave Abel | Georgia-Pacific:<br>Foley Cellulose WWTP Modifications | Perry | FL | Tetra Tech | Furnished Instruments, PLC Panels, local and DCS programming services for the plant effluent lagoon process | | X | 2019 | $1,348,940 |
| Y0939 | Nan Johnson | City of Sunrise, FL<br>Sunrise 2018-2019 Services Contract | Sunrise | FL | Revere Control Systems, Inc. | Instrument Calibrations, SCADA Support Services, Communications Maintenance, Control Panel Upgrades | X | X | 2019 | $301,123 |
| Y0125 | Joey Didona | City of Bradenton, FL:<br>WWTF Improvements-Headworks & Oxidation Ditch | Bradenton | FL | Jones Edmunds & Associates | Field Instrumentation, Control Panels, PLC Programming, OIT Programming, Strartup & Commissioning | | X | 2019 | $162,554 |
| Y1017 | Nan Johnson | City of West Palm Beach, FL:<br>Lift Station Radio Replacement | West Palm Beach | FL | Revere Control Systems, Inc. | Provided, Installed and Configured Radio/Cell Modem Hardware for Ninety (90) Remote Sites | X | X | 2019 | $364,900 |
| Y1169 | Nan Johnson | City of West Palm Beach, FL:<br>WTF Automation System Services (SCADA) | West Palm Beach | FL | Revere Control Systems, Inc. | Provided, Installed and Commissioned Fifteen (15) RTU Control Panels including Revisions to the VTScada HMI Application | | X | 2019 | $494,308 |
| W0188 | Joey Didona | Hillsborough County:<br>Countywide Potable Water Quality Monitoring Stations | Tampa, FL | FL | McKim & Creed | Prime Contractor; Field Instrumentation, Control Panels, Factory Testing, Electrical Installation, Startup & Commissioning | X | | 2020 | $1,541,346 |
| V0373 | Nan Johnson | City of West Palm Beach, FL:<br>Re-Pump Station NaOCl System | West Palm Beach | FL | Jacobs Engineering Group | Field Instrumentation, PLC Control Panels, Startup & Commissioning | X | | 2020 | $491,670 |
| W0549 | Nan Johnson | Bonita Springs Utilities:<br>RO Wellfield Expansion & Lime System Improvements | Bonita Springs | FL | CH2M Hill | Field Instrumentation, PLC Control Panels, PLC Programming, HMI Programming, Startup & Commissioning | X | | 2020 | $758,652 |
| Y0420 | Jay Wagner | Orlando Utillities Commission:<br>Pine Hill WTP Ozone Generator Replacement | Orlando | FL | CPH Engineers, Inc. | Provided extensive new instrumentation and control panel upgrades | X | | 2020 | $516,274 |

| RCS Job No. | Project Manager | Owner/Project | City/County | State | Architect/ Engineer | Description | W | WW | Year Complete | Total $ |
|---|---|---|---|---|---|---|---|---|---|---|
| Y0907 | Nan Johnson | City of Hallandale Beach:<br>Hallandale Beach WTP SCADA Enhancements | Hallendale Beach | FL | Revere Control Systems, Inc. | Redundant SCADA Servers, Server Rack, Replace iFix HMI with Trihedral VTScada HMI | X | | 2020 | $125,101 |
| AA0025 | Nan Johnson | Bonita Springs Utilities:<br>EWRF ControlNet to Ethernet Conversion & Redundancy Improv | Bonita Springs | FL | Revere Control Systems, Inc. | Upgrade the PLC Based Network from ControlNet to Ethernet | | X | 2020 | $214,377 |
| V1015 | Nan Johnson | City of Hialeah:<br>Reverse Osmosis WTP Support | Hialeah | FL | Revere Control Systems, Inc. | Process Control Systems Maintenance and Support Services | X | | 2020 | $179,938 |
| Y0757 | Dave Abel | City of North Miami Beach:<br>Norwood WTP Phase I Expansion | North Miami Beach | FL | CH2M Engineers | RO and NF Skid Additions and Modifications. PLC panel, instruments and programming existing SCADA | X | | 2020 | $370,169 |
| Z1046 | Nan Johnson | Peace River Manasota Reg WSA:<br>SCADA Radio Network | Lakewood Ranch | FL | Revere Control Systems, Inc. | Provision and Installation of Radio Communication Infrastructure/Towers | X | | 2020 | $111,197 |
| Y0237 | Nan Johnson | Dunes Community Development District, Utility Division:<br>Palm Coast CDD WTP Expansion | Palm Coast | FL | CPH Engineers, Inc. | Field Instrumentation, Control Panels, PLC Programming, HMI Programming, Startup & Commissioning | | X | 2020 | $453,747 |
| Z0828 | Shawn Poole | City of Sunrise<br>Sunrise Services 2019-2020 | Sunrise | FL | Revere Control Systems, Inc. | Instrument Calibrations, SCADA Support Services, Communications Maintenance, Control Panel Upgrades | X | X | 2020 | $378,437 |
| Y0831 | Dave Abel | Orange County Board of Commissioners<br>Pump Station Package 18 | Orange County | FL | CPH Engineers, Inc. | Furnish RTU and Pump Control Panels, and Level Instruments for 5 Sites | | X | 2020 | $118,764 |
| W0756 | James Noe | City of Orlando<br>Orlando Water Conservation II WRF RAS/WAS Scum and Biosolid System Improvements | Orlando | FL | Carollo Engineers | Field Instruments, Control Panels, Fiber Optic Cable, Instrument Calibration, Startup and Training | | X | 2020 | $705,915 |
| Y0862 | Lance Owens | Orange County Board of Commissioners<br>Orange Eastern Water Suppy Facility | Orange County | FL | Tetra Tech | PLC Control Panels (2), PLC / HMI Programming, Aeration and Air Quality Control Equipment, Field Instrumentation | X | | 2020 | $463,805 |
| Z0474 | Jay Wagner | Clay County Utility Authority<br>Tynes Reclaim Water Pumping Facility | Clay County | FL | Jacobs Engineering Group | Field Instruments, Control Panels, RTU/PLC Equipment, | | X | 2020 | $241,510 |

# Revere Control Systems, Inc.
# MAJOR PROJECTS COMPLETED

## Georgia

### January 2021

| RCS Job No. | Project Manager | Owner/Project | City/County | State | Architect/ Engineer | Description | W | WW | Year Complete | Total $ |
|---|---|---|---|---|---|---|---|---|---|---|
| L038300 | Nan Johnson | City of Statesboro:<br>GSU Reuse Pump Station | Statesboro | GA | Hussey, Gay, Bell & DeYoung | Field Instrumentation, PLC Control Panel, HMI Configuration, Startup & Commissioning Services | | X | 2011 | $123,600 |
| M032400 | Nan Johnson | City of Valdosta:<br>WWTP Pump Station Improvements | Valdosta | GA | Camp Dresser & McKee | Field Instrumentation, Radios, Antenna Towers and Materials, PLC Programming for Data Concentrator, Startup and Commissioning | | X | 2012 | $171,769 |
| P002000 | Jack Shaw | City of Rome:<br>Hamler WTP Flash Mix and Alkalinity Addition | Rome | GA | Jacobs Engineering | Field Instrumentation, Control Panels, PLC Programming, HMI Configuration, Fiber Terminations, Checkout and Startup | X | | 2014 | $189,039 |
| U0451 | James Noe | City of Valdosta:<br>Valdosta Wells 9 & 10 | Valdosta | GA | CDM Smith | SCADA System for Valdosta Production Wells 9 & 10 and the Valdosta Island Annex 69B Lift Station, PLC Panels, Project Management, Engineering, PLC/HMI Programming, Documentation, Startup and Instrumentation, Onsite Services including Training | X | | 2017 | $131,393 |
| W0826 | Nan Johnson | City of Dalton Board of Commissioners:<br>Dalton Reservoir Pump Station | Dalton | GA | Weidman and Singleton | Field Instrumentation, PLC Control Panel, PLC/OIT Programming, Startup & Commissioning, Client Training | X | | 2019 | $126,145 |
| Z0451 | Peter Basily | Savannah Waste Management<br>Superior Landfill & Recycling Center | Savannah | GA | Monroe Environmental | Plant Automation System Services (SCADA), Radio Replacement for Lift Stations: Leachate System Control Panel, PLC Programming, Field Instruments | | X | 2020 | $226,339 |
| | | | | | | | | | | |

# Revere Control Systems, Inc.
# MAJOR PROJECTS COMPLETED

## Kentucky

### January 2021

| RCS Job No. | Project Manager | Owner/Project | City/County | State | Architect/ Engineer | Description | W | WW | Year Complete | Total $ |
|---|---|---|---|---|---|---|---|---|---|---|
| K0370 | Dave Abel | Bowling Green Municipal Utilities: Bowling Green WWTP SCADA | Bowling Green | KY | Gresham & Smith | Supplied Instrumentation, 2 PLC Control Panels, Citect SCADA system, wireless network, system responsibility | | X | 2013 | $816,492 |
| L0871 | Dave Abel | Bowling Green Municipal Utilities: Sewer Pump Station Telemetry | Bowling Green | KY | Revere Control Systems, Inc. | Provided 17 radio telemetry panels for electrical and owner installation | | X | 2013 | $175,729 |
| W0213 | James Noe | Bowling Green Municipal Utilities: WTP Alternate Disinfection Feed Station | Bowling Green | KY | Smith Seckman Reid | Water Treatment Plant Expansion. PLC Control Panels, Local Control Panels, Field Equipment, Network and SCADA Upgrades | X | | 2019 | $235,918 |

# Revere Control Systems, Inc.
# MAJOR PROJECTS COMPLETED

## Louisiana

### January 2021

| RCS Job No. | Project Manager | Owner/Project | City/County | State | Architect/ Engineer | Description | W | WW | Year Complete | Total $ |
|---|---|---|---|---|---|---|---|---|---|---|
| J0484 | Nan Johnson | St. Bernard's Parish WTP Repairs | St. Bernard's Parish | LA | Camp, Dresser & McKee | Field instrumentation; PLC control panels; PLC programming; HMI configuration; report generation; interface with vendor-supplied systems (VFDs, MCCs, Switchgear); field instrument installation; checkout, testing, startup and commissioning | X | | 2011 | $754,286 |
| J0264 | Nan Johnson | Jefferson Parish Water Dept. Carbon Slurry Feed System East Bank & West Bank WTPs | Marrero | LA | Jordan Jones & Goulding | Field Instrumentation, PLC Control Panels, PLC Programming, HMI Configuration, Field Checkout & Startup | X | | 2011 | $220,503 |
| M0506 | Arthur Thomas | Jefferson Parish LA Hurricane Protection Project Harvey Pump Station | Harvey | LA | ECM Consultants | Field Instrumentation; PLC Control Panels/Consoles; PLC Programming; Customer Training; Startup & Commissioning | | X | 2013 | $192,287 |
| M0077 | Dave Abel | Jefferson Parrish LA Metairie Stormproofing Elmwood & Cousins Pump Stations | Metairie | LA | Army Corps of Engineers | Provided instrumentation, panel upgrades and PLC and OIT programming in support of new generators and floatable removal at the two pumping stations | X | | 2013 | $502,920 |
| M0340 | Dave Abel | St. Bernard's Parish Dravo PS | Chalmette | LA | Camp, Dresser & McKee | Provided instrumentation, new control panel and PLC programming to monitor and control the new pumping station | X | | 2013 | $114,460 |
| P0546 | Arthur Thomas | City of Broussard Sewage Pump Station | Broussard | LA | Allain & Associates | Pump Station Control Panels | | X | 2014 | $158,110 |
| N0328 | Arthur Thomas | City of Lafayette Old Maurice Lift Station | Lafayette | LA | Allain & Associates | Modicon PLC & Ambasador Caffery SCADA programming modifications & installation of control panel components | X | | 2014 | $100,954 |
| N0329 | Arthur Thomas | City of Shreveport Lucas Station | Shreveport | LA | BBC Engineering | Pump Station Control Panels | | X | 2014 | $150,595 |
| P0448 | Dave Abel | City of Shreveport Water System Improvements for Backflow Prevention Program | Shreveport | LA | CDM Engineers | RTU's, Analyzer Panels and Instrumentation for 3 flow vaults, Enet radio network, update existing SCADA | | X | 2015 | $253,518 |
| N0575/N0577 | Jay Wagner | City of Bossier City, LA Red River & NE WWTP Expansion & Rehab Project | Bossier City | LA | Manchac Consulting Group | Startup of Instrumentation, Rockwell PLC's and Archestra SCADA System for new Red River WWTP involving highly integrated, modular design involving multiple vendors. Retrofit of existing PLC control panels at NE WWTP plus integration to new Archestra SCADA System and Sludge Processing Building Processes | | X | 2015 | $2,601,656 |
| R0965 | Jay Wagner | City of Shreveport, LA Caddo-Bossier Port Lift Station Improvements | Shreveport | LA | MWH Americas | Provided instrumentation and automatic controls and float switch backup system for operation of three pump lift station | | X | 2016 | $202,960 |

| RCS Job No. | Project Manager | Owner/Project | City/County | State | Architect/ Engineer | Description | W | WW | Year Complete | Total $ |
|---|---|---|---|---|---|---|---|---|---|---|
| N0187 | Jay Wagner | City of Shreveport, LA<br>Shreveport SCADA Upgrade | Shreveport | LA | Manchac/Burns & McDonald | Instruments & controls (Archestra/Rockwell) for newly constructed 30 MGD WWTP (Red River) & PLC/SCADA Update of Northeast WWTP | | X | 2016 | $1,024,200 |
| R0696 | Jay Wagner | City of Youngsville, LA<br>Youngsville Ground Storage Tank | Youngsville | LA | Fentermaker & Asso./M&E Consulting | Radio based Ground Storage Tank/Water Distribution VTSCADA System | X | | 2016 | $559,282 |
| U0744 | Jay Wagner | City of Shreveport, AL<br>SCADA System Upgrade Phase II | Shreveport | FL | Revere Control Systems, Inc. | Upgrade of Lucas, North Regional, Collections as Amiss WTP Citect SCADA Systems | X | X | 2016 | $150,000 |
| N0575 | Jay Wagner | Bossier City, LA:<br>Red River NE WWTP Expansion and Rehab | Bossier City | LA | Manchac/Burns & McDonnell | Construction of new WWTP; sludge processing and controls upgrade | | X | 2016 | $1,452,446 |
| R0045 | Jay Wagner | Bossier Parish Police Jury<br>Bossier Parish Area WWTF | Bossier City | LA | Denmon Engineering | Provided MCC's, instrumentation, Wonderware InTouch-based SCADA system with 3 Modicon RTUs interconnected via fiber optic ring to monitor water treatment processes | | X | 2017 | $428,845 |
| U0133 | Jay Wagner | St. Bernard Parish, LA:<br>SCADA/CAMO Panel Project | Chalmette | LA | CDM Smith | Provided new RTU Control Panels; HMI SCADA Software and Computer Hardware; Electrical Installation; Site Testing, Startup and Commissioning | | X | 2017 | $4,968,420 |
| U0423 | Jay Wagner | Town of Erath, LA:<br>WWTF Upgrades | Erath | LA | Sellers & Associates | Provided instrumentation and relay control panel for upgrade of small WWTP | | X | 2017 | $277,713 |
| U0492 | Jay Wagner | Town of Greenwood, LA:<br>WTP Improvements | Greenwood | LA | Balar Associates | Provided instrumentation for new water treatment plant. Electrical Contractor provided upgrades to existing SCADA as subcontractor to Revere | X | | 2017 | $299,370 |
| R0138 | Jay Wagner | City of Fort Polk, LA:<br>North & South WWTP | Fort Polk | LA | MWH Engineering | Provided Wonderware (Archestra) and Allen-Bradley PLC-based control system and instrumentation for two new WWTP's | | X | 2017 | $2,384,130 |
| V0480 | Jay Wagner | City of Lake Charles:<br>Lake Charles WWTP B/C Expansion and Rehabilitation Project | Lake Charles | LA | Affinity Engineering Group | Provided process instrumentation, PLC control panels, SCADA and CCTV security systems interconnected via Plant-Wide Fiber Optic network | | X | 2018 | $448,113 |
| Y0643 | Jay Wagner | City of Bossier City<br>Bossier City NE WWTP Upgrades | Bossier City | LA | Manchac Consulting Group | Field instrumentation; PLC Control Panels; PLC programming; HMI configuration | | X | 2020 | $431,170 |

# Revere Control Systems, Inc.
# MAJOR PROJECTS COMPLETED

## Mississippi

### January 2021

| RCS Job No. | Project Manager | Owner/Project | City/County | State | Architect/ Engineer | Description | W | WW | Year Complete | Total $ |
|---|---|---|---|---|---|---|---|---|---|---|
| K0177 | Nan Johnson | Hancock County Utility Authority Western Regional WWTP | Pearlington | MS | Carollo Engineers | Field Instrumentation, HMI Configuration, Startup and Commissioning Services | | X | 2011 | $206,988 |
| K0504 | Dave Abel | Diamondhead Water and Sewer District Electrical and SCADA Improvements | Diamondhead | MS | Carollo Engineers | Provided instruments, ICL RTU's and central iFIX SCADA for 33 lift stations | | X | 2012 | $812,497 |
| P0044 | James Noe | Clarksdale Public Utilities Commission 2012 SRF Wastewater Improvements, Contract 1: Equipment Upgrades | Clarksdale | MS | WGK, Inc. | WWTP SCADA upgrade: controls and instrumentation; engineering; programming; start-up service; calibration; installation; operator training | | X | 2014 | $155,613 |
| P0855 | Dave Abel | Jackson County Board of Supervisors Jackson WTP Eastside | Jackson County | MS | Arcadis/ Malcolm Pirnie | Provided control panels, instrumentations, and central SCADA to support new RO plant | X | | 2016 | $479,483 |
| V0446 | James Noe | Steele Farms, MS Farm Monitoring and Control 2016 | Steele Farms | MS | Revere Control Systems, Inc. | Telemetry RTU Equipment, PLC Programming, Startup & Commissioning, Training | X | | 2017 | $147,423 |

# Revere Control Systems, Inc.
# MAJOR PROJECTS COMPLETED

## North Carolina

### January 2021

| RCS Job No. | Project Manager | Owner/Project | City/County | State | Architect/ Engineer | Description | W | WW | Year Complete | Total $ |
|---|---|---|---|---|---|---|---|---|---|---|
| K0144 | Nan Johnson | City of Winston-Salem<br>Elledge WWTP Headworks | Winston-Salem | NC | Black & Veatch | Field Instrumentation; Bubbler Control System; PLC Control Panels; Fiber Optic Cable Terminations and Testing; Field Checkout, Testing and Commissioning | | X | 2011 | $445,685 |
| J0865 | Nan Johnson | City of Winston-Salem/Forsyth County Utilities Commission<br>Thomas WTP | Winston-Salem | NC | Black & Veatch | Field Instrumentation, PLC Control Panels, I/O Checkout, Startup and Commissioning Services | X | | 2011 | $484,475 |
| M0323 | Nan Johnson | Durham County<br>Triangle WWTP Reclaimed Water | Durham County | NC | Camp, Dresser & McKee | Field Instrumentation, PLC/Local Control Panels, PLC Programming, HMI Configuration, Fiber Optic Cable, Startup/Commissioning | | X | 2012 | $166,128 |
| L0031<br>L0032 | Nan Johnson | Town of Burgaw, NC<br>Peder county PSI ARRA Projects | Burgaw | NC | McKim & Creed | Field Instrumentation, Pump Control Panels, SCADA RTU Panels, Antenna Towers and Materials, PLC and OIT/HMI Programming, Startup & Commissioning | | X | 2012 | $200,140 |
| J0707 | Nan Johnson | Cape Fear Public Utility Authority<br>Wilmington Sweeney WTP | Wilmington | NC | Black & Veatch | WTP Plant SCADA Replacement | X | | 2012 | $2,021,806 |
| L0761 | Nan Johnson | City of Wilmington<br>NCFPUA Westbrook ASR Wells | Wilmington | NC | ASR Systems & Integrated Project Delivery | Field Instrumentation, PLC Control Panel, PLC Programming, OIT Configuration, HMI Configuration, Startup and Commissioning | X | | 2013 | $127,248 |
| P0510 | Jeff Grove | Onslow County<br>Water & Sewer Authority:<br>Northwest Regional WRF | Onslow County | NC | McKim & Creed | Field Instrumentation, PLC Control Panels, Network Hardware, Workstation/Server Hardware, Field Checkout and Commissioning | | X | 2015 | $749,219 |
| R0901 | Jeff Grove | Cape Fear Public Utility Authority:<br>Hwy 421 Raw Water Valve | Cape Fear | NC | Black & Veatch | Control System Integration Services, Instrumentation System, RTU, Radio, Network Hardware, Configuration Services | | X | 2016 | $137,968 |
| R0412 | Jeff Grove | Town of Cary:<br>Apex WTF RWPS Intake Improvements | Cary | NC | HDR Engineering | Raw Water Pump Station, Instrumentation, PLC/RIO Control Panel, PLC Programming, OIT Programming, HMI Programming, Startup and Commissioning | X | | 2017 | $334,345 |
| V0340 | Jeff Grove | Sanderson Farms:<br>Sanderson Farms WTP | St. Paul | NC | Chas. N. Clark Associates | Water Treatment Plant, MCC and Remote Well Control Automation Package: field instrumentation, MCC, PLC Controls, Pump Controls and telemetry and HMI System | X | | 2017 | $392,297 |
| R0402 | Nan Johnson | Town of Cary:<br>APEX WTF Phase III-Services | Cary | NC | HDR Engineering | PLC Programming, HMI Programming, Factory Testing, Field Testing, Startup & Commissioning | X | | 2019 | $876,049 |

| RCS Job No. | Project Manager | Owner/Project | City/County | State | Architect/ Engineer | Description | W | WW | Year Complete | Total $ |
|---|---|---|---|---|---|---|---|---|---|---|
| R0572 | Nan Johnson | Town of Cary:<br>CAWTF Phase III Expansions | Cary | NC | HDR Engineering | Field Instrumentation, PLC and Local Control Panels, Calibrations, Checkout & Startup | X | | 2019 | $1,579,112 |
| U0366 | Nan Johnson | Town of Cary:<br>Tier I WWTP Pump Station SCADA | Cary | NC | Hazen & Sawyer | Prime Contractor Role, Field Instrumentation, Pump Control Panels, RTU Panels, PLC Programming, HMI Programming, Electrical Installation, Startup & Commissioning | | X | 2019 | $954,903 |
| P0676 | Nan Johnson | Town of Cary:<br>Cary/Apex WTF Control | Cary | NC | HDR Engineering | Plant Control System Upgrade including PLC Hardware, HMI Software/Application, Fiber Optic Network System, Ethernet Switches, Installation, Startup & Commissioning | X | | 2020 | $2,833,349 |
| Y0805 | Peter Basily | Lincoln County Public Works:<br>Lincoln Co WTP Expansion | Lincoln County | NC | Woolpert Engineering | Furnished field instrumentation equipment, start-up, and calibration services, provided a network system with readily supportable control and lower life cycle support costs | X | | 2020 | $112,792 |

# Revere Control Systems, Inc.
# MAJOR PROJECTS COMPLETED

## South Carolina

### January 2021

| RCS Job No. | Project Manager | Owner/Project | City/County | State | Architect/ Engineer | Description | W | WW | Year Complete | Total $ |
|---|---|---|---|---|---|---|---|---|---|---|
| D004600 | Derick Lamar | City of Greenville, SC<br>Gilder Creek WWTP | Greenville | SC | Camp, Dresser & McKee | Instrumentation, calibration and marshalling panels for plant improvements and expansion. | | X | 2006 | $395,119 |
| L021800 | Nan Johnson | City of Lancaster Public Utilities<br>Catawba River WWTP | Lancaster | SC | McGill | Field Instrumentation, PLC Control Panel, HMI Configuration, I/O Checkout, Startup and Commissioning Services | | X | 2011 | $107,829 |
| Y0249 | Peter Basily | City of Rock Hill, SC:<br>Burgis Creek Sewer Improvements | Rock Hill | SC | Brown & Caldwell | Field Instrumentation, PLC Control Panel, RVSS MSP Panels, Spare Parts, I/O Checkout, Start-up and Commissioning Services, Customer Training | | X | 2019 | $149,688 |

# Revere Control Systems, Inc.
# MAJOR PROJECTS COMPLETED

## Tennessee

### January 2021

| RCS Job No. | Project Manager | Owner/Project | City/County | State | Architect/ Engineer | Description | W | WW | Year Complete | Total $ |
|---|---|---|---|---|---|---|---|---|---|---|
| K025600 | Dave Abel | Knoxville Utilities Board<br>Whitaker WTP PS Filters | Knoxville | TN | Burns & McDonnell | Instrumentation and control system, filter control panels and consoles, instrument racks, and instrument panel boards | X | | 2011 | $486,137 |
| K033100 | Dave Abel | Knoxville Utility Board<br>Second Creek WW Storage Facility | Knoxville | TN | Gresham Smith and Partners | Wastewater Storage Facility Instrumentation & Control Systems | | X | 2011 | $367,270 |
| M015300 | Arthur Thomas | Metro Water & Sewer<br>Dry Creek WWTF Instrumentation | Nashville | TN | Brown and Caldwell | Control Panels, Instrumentation; Calibration; testing; startup services | | X | 2012 | $645,242 |
| M015400 | Arthur Thomas | Metro Water & Sewer<br>Dry Creek WWTF Panel Retrofit | Nashville | TN | Brown and Caldwell | Control Panel Retrofit Installation; Instrumentation; Calibration | | X | 2012 | $276,199 |
| L015200 | Dave Abel | Knoxville Utilities Board<br>Lower 3rd Creek Wastewater Storage Facility | Knoxville | TN | Gresham Smith and Partners | Instrumentation, control panel and integration services for the new wastewater storage unit | | X | 2012 | $383,880 |
| L030300 | Dave Abel | Metro Water & Sewer<br>Omohundro WTP Basin Improvements | Nashville | TN | Neel-Schaffer | Provided new PLC's for 6 existing sedimentation basin control panels; added status and control to existing Citect SCADA | X | | 2012 | $278,862 |
| L086800 | Dave Abel | Cunningham Utility District<br>Cunningham-East Montgomery WTP | Clarksville | TN | Revere Control Systems | Outfitted 5 existing filter consoles with new AB PLC's; installed new fiber network; provided new Wonderware SCADA application to monitor filters, backwash and common components | X | | 2012 | $175,606 |
| L020400 | Dave Abel | City of Smyrna, TN<br>Smyrna Repurified Pump Station | Smyrna | TN | Highers Koonce | Provided instruments, CP panel and programming for re-use pumping station | X | | 2012 | $162,006 |
| L0764 | Dave Abel | Metropolitan Gov't of Nashville & Davidson Counties<br>Washington CSO Control Facility | Nashville | TN | Metcalf & Eddy | LCP and instruments to measure sewer overflow conditions and control bypass gates for flow and level control | | X | 2013 | $146,167 |
| M0866 | Arthur Thomas | Metro Water Services<br>White's Creek WWTP Optimization & Disinfection Project | Nashville | TN | AECOM/Brown and Caldwell | Optimization Instrumentation including Main Control Panel LCP-1000, MCC-P10 Modifications, 18-inch Magnetic flow meters, radar level transmitter, level floats, surge | | X | 2013 | $126,957 |
| M0543 | Dave Abel | Hixson Utility District | Hixson | TN | Revere Control Systems | Upgrade RTUs at 3 Tank 4 BPS Sites; Upgrade SCADA | X | | 2013 | $242,794 |
| N0780 | Dave Abel | Columbia Power & Water Systems<br>Telemetry Upgrade Phase 2 | Columbia | TN | Revere Control Systems | Motorola upgrades to tank and BPS telemetry system | X | | 2014 | $153,703 |
| R0108 | Dave Abel | US Army Environmental Center<br>Milan Army Ammunition Plant<br>Instrument & Well Pump | Milan | TN | ARCADIS-US | Instrument and well pump control panel system integration at Milan PP | X | | 2014 | $116,015 |

| RCS Job No. | Project Manager | Owner/Project | City/County | State | Architect/ Engineer | Description | W | WW | Year Complete | Total $ |
|---|---|---|---|---|---|---|---|---|---|---|
| N0390 | Dave Abel | Columbia Power & Water Systems<br>Columbia WTP GAC Upgrade | Columbia | TN | Water Management Systems | PLC control panel, instrumentation, fiber communications, WonderWare upgrade | X | | 2014 | $266,855 |
| W0238 | Dave Abel | Knoxville Utilities Board:<br>MBW Electrical Upgrades, Phase 1 | Knoxville | TN | CD Smith | Furnished new PLC panel and retrofit existing, furnish field hardware, fiber and programming services for new filter basin | X | | 2018 | $175,927 |
| W0012 | Dave Abel | City of Franklin:<br>Water Distribution & Collection Systems SCADA Improvements | Franklin | TN | CDM | Upgrades to LS and BPS RTU sites, radio and cell comms and central SCADA system | X | X | 2019 | $1,833,151 |
| W0775 | Nan Johnson | Knoxville Utilities Board:<br>Loves Creek UV System | Knoxville | TN | C2RL Engineers | Field Instrumentation, PLC Control Panel, PLC/OIT Programming, Startup & Commissioning | | X | 2019 | $276,308 |
| V0537 | Dave Abel | City of Chattanooga:<br>Orchard Knob Pump Station Improvements | Chattanooga | TN | ARCADIS-US | Furnished and integrated PLC w/OIT control panel and instrumentation for a large lift stations | | X | 2019 | $188,492 |
| Y0466 | James Noe | First Utility District:<br>Jenkins Lane WTP SCADA Communications & Fiber System Improvement | Knox County | TN | First Utility District of Knox County | WTP upgrade/replacement, including 13 existing LCP cabinets and fiber optic cabling, SCADA radio polling system upgrade, installation and programming of master PLC, provided hardware/software for 96 remote sites using existing radios, and end-user programming system improvement | X | | 2019 | $274,020 |
| W0991 | Dave Abel | City of Portland, TN:<br>Portland WWTP Improvements | Portland | TN | Jacobs Engineering Group | Upgrades to Influent and Effluent Pump Stations CP’s and Instruments; Upgrade plant SCADA licensing and Application | | X | 2020 | $319,200 |
| W0732 | Dave Abel | Trenton LIght and Water:<br>Trenton WWTP Upgrade | Trenton | TN | JR Wauford & Company | Furnished main control PLC panel, field instrumentation, SCADA workstation and peripherals, programming, testing and documentation | | X | 2020 | $290,590 |
| V094400 | Dave Abel | City of Chattanooga:<br>Friar's Branch Pump Station Improvements | Chattanooga | TN | ARCADIS-US | Wastewater lift pumping station, Motorola PLC, GE Quickpanel OIT, Field Instruments and Programming | | X | 2020 | $294,336 |
| V1024 | Dave Abel | City of Loudon, TN<br>Loudon Utilities Board | Loudon | TN | Utiliworks | Replaced legacy RTU's and radios with CompactLogix and 4RF radios; updated SCADA and FCC licnese | X | X | 2020 | $639,585 |

# Revere Control Systems, Inc.
# MAJOR PROJECTS COMPLETED

## Texas

### January 2021

| RCS Job No. | Project Manager | Owner Project | City/County | ST | Architect/ Engineer | Description | W | WW | Year Complete | Total $ |
|---|---|---|---|---|---|---|---|---|---|---|
| Y0247 | Jay Wagner | Sanderson Farms: Sanderson Farms WTP | Tyler | TX | Chas N. Clark Associates | Provided instrumentation, PLC control panels and motor control center for a booster pump station, ground storage tank and remote well that provides process water for the Sanderson Farms processing facility | X | | 2019 | $216,028 |
| Y0395 | Jay Wagner | Sanderson Farms: Sanderson Farms WTP | Tyler | TX | Chas N. Clark Associates | Provided instrumentation, PLC control panels and motor control center for an Anarobic Pump Station & wastewater Treatment Plant and Spray Field Distribution System treating waste water genrated by the Sanderson Farms processing facility | | X | 2019 | $1,164,724 |

SCHEDULE C - LIST OF MAJOR EQUIPMENT AVAILABLE

| ITEM | PURCHASE DATE | CONDITION | ACQUIRED VALUE |
|---|---|---|---|
| Corning Fiber Termination Kit | May 2020 | Excellent | $2,000.00 |
| Fluke OTDR Fiber Test Equipment | July 2007 | Good | $10,000.00 |
| Fluke Multimeter 787 | July 2019 | Good | $ 1,000.00 |
| | | | |
| | | | |
| | | | |
| | | | |
| | | | |
| | | | |
| | | | |
| | | | |
| | | | |
| | | | |
| | | | |
| | | | |
| | | | |
| | | | |
| | | | |
| | | | |

EJCDC® C-451, Qualifications Statement.
Copyright © 2013 National Society of Professional Engineers, American Council of Engineering Companies,
and American Society of Civil Engineers. All rights reserved.

RSM

RSM US LLP

## Independent Accountant's Review Report

Board of Directors
Revere Control Systems, Inc.

We have reviewed the accompanying financial statements of Revere Control Systems, Inc. (the Company), which comprise the balance sheets as of June 30, 2018 and 2017, the related statements of income, changes in stockholders' equity and cash flows for the years then ended, and the related notes to the financial statements. A review includes primarily applying analytical procedures to management's financial data and making inquiries of management. A review is substantially less in scope than an audit, the objective of which is the expression of an opinion regarding the financial statements as a whole. Accordingly, we do not express such an opinion.

**Management's Responsibility for the Financial Statements**
Management is responsible for the preparation and fair presentation of these financial statements in accordance with accounting principles generally accepted in the United States of America; this includes the design, implementation and maintenance of internal control relevant to the preparation and fair presentation of financial statements that are free from material misstatement, whether due to fraud or error.

**Accountant's Responsibility**
Our responsibility is to conduct the review engagements in accordance with Statements on Standards for Accounting and Review Services promulgated by the Accounting and Review Services Committee of the American Institute of Certified Public Accountants. Those standards require us to perform procedures to obtain limited assurance as a basis for reporting whether we are aware of any material modifications that should be made to the financial statements for them to be in accordance with accounting principles generally accepted in the United States of America. We believe that the results of our procedures provide a reasonable basis for our conclusion.

**Accountant's Conclusion**
Based on our reviews, we are not aware of any material modifications that should be made to the accompanying financial statements in order for them to be in accordance with accounting principles generally accepted in the United States of America.

**Other Matter**
The accompanying supplementary information is presented for purposes of additional analysis and is not a required part of the basic financial statements. Such information is the responsibility of management and was derived from, and relates directly to, the underlying accounting and other records used to prepare the financial statements. The supplementary information has been subjected to the review procedures applied in our review of the basic financial statements. We are not aware of any material modifications that should be made to the supplementary information. We have not audited the supplementary information and do not express an opinion on such information.

RSM US LLP

Birmingham, Alabama
September 13, 2018



RSM US LLP is the U.S. member firm of RSM International, a global network of independent audit, tax, and consulting firms. Visit rsmus.com/aboutus for more information regarding RSM US LLP and RSM International.

**Revere Control Systems, Inc.**

**Balance Sheets**
**June 30, 2018 and 2017**
**See Independent Accountant's Review Report**

| | 2018 | 2017 |
|---|---|---|
| **Assets** | | |
| Current assets: | | |
| Cash | **$ 550** | $ 198,388 |
| Restricted cash | **83,383** | 18,110 |
| Contracts receivable | **7,675,562** | 9,667,096 |
| Income taxes receivable | **60,937** | 283,841 |
| Costs and estimated earnings in excess of billings on uncompleted contracts | **5,949,677** | 4,599,113 |
| Inventories | **99,047** | 76,444 |
| Prepaid expenses | **252,579** | 146,824 |
| **Total current assets** | **14,121,735** | 14,989,816 |
| Property and equipment, net | **2,278,109** | 2,254,465 |
| Other assets: | | |
| Deposits | **25,691** | 17,506 |
| Investments | **126,071** | 126,415 |
| Other assets | **-** | 20,217 |
| **Total other assets** | **151,762** | 164,138 |
| **Total assets** | **$ 16,551,606** | $ 17,408,419 |
| **Liabilities and Stockholders' Equity** | | |
| Current liabilities: | | |
| Bank overdraft | **$ 58,997** | $ - |
| Line of credit | **1,163,988** | - |
| Current portion of long-term debt | **334,899** | 233,515 |
| Accounts payable | **1,660,986** | 1,878,956 |
| Accrued expenses | **746,393** | 1,139,214 |
| Accrued and withheld taxes | **63,420** | 83,744 |
| Billings in excess of costs and estimated earnings on uncompleted contracts | **2,195,342** | 3,771,699 |
| **Total current liabilities** | **6,224,025** | 7,107,128 |
| Long-term liabilities: | | |
| Long-term debt, less current portion | **302,910** | 273,780 |
| Deferred income taxes | **281,254** | 374,827 |
| **Total long-term liabilities** | **584,164** | 648,607 |
| **Total liabilities** | **6,808,189** | 7,755,735 |
| Contingencies (Notes 8 and 10) | | |
| Stockholders' equity: | | |
| Common stock, par value $0.025 per share; 200,000 shares authorized and issued, 104,950 and 107,150 shares outstanding at June 30, 2018 and 2017, respectively | **5,000** | 5,000 |
| Additional paid-in capital | **143,595** | 143,595 |
| Retained earnings | **11,558,355** | 11,206,812 |
| | **11,706,950** | 11,355,407 |
| Less treasury stock, 95,050 and 92,850 shares, at cost, at June 30, 2018 and 2017, respectively | **(1,963,533)** | (1,702,723) |
| **Total stockholders' equity** | **9,743,417** | 9,652,684 |
| **Total liabilities and stockholders' equity** | **$ 16,551,606** | $ 17,408,419 |

See notes to financial statements.

**Revere Control Systems, Inc.**

**Statements of Income**
**Years Ended June 30, 2018 and 2017**
**See Independent Accountant's Review Report**

| | 2018 | 2017 |
|---|---|---|
| Contract revenue | **$ 41,558,012** | $ 42,034,860 |
| Cost of contract revenue | **33,063,189** | 32,637,974 |
| **Gross profit** | **8,494,823** | 9,396,886 |
| Operating expenses | **7,974,665** | 7,492,257 |
| **Income from operations** | **520,158** | 1,904,629 |
| Other income (expense): | | |
| Interest expense | **(91,182)** | (16,845) |
| Interest income | **363** | 1,246 |
| (Loss) gain on sale of property and equipment | **(344)** | 21,000 |
| Other income | **3,307** | 34,335 |
| **Total other income (expense)** | **(87,856)** | 39,736 |
| **Income before income taxes** | **432,302** | 1,944,365 |
| Income taxes: | | |
| Current income tax expense | **(174,332)** | (566,924) |
| Deferred income tax benefit (expense) | **93,573** | (163,680) |
| | **(80,759)** | (730,604) |
| **Net income** | **$ 351,543** | $ 1,213,761 |

See notes to financial statements.

RSM

RSM US LLP

## Independent Accountant's Review Report

Board of Directors
Revere Control Systems, Inc.

We have reviewed the accompanying financial statements of Revere Control Systems, Inc. (the Company), which comprise the balance sheets as of June 30, 2019 and 2018, the related statements of income, changes in stockholders' equity and cash flows for the years then ended, and the related notes to the financial statements. A review includes primarily applying analytical procedures to management's financial data and making inquiries of management. A review is substantially less in scope than an audit, the objective of which is the expression of an opinion regarding the financial statements as a whole. Accordingly, we do not express such an opinion.

**Management's Responsibility for the Financial Statements**
Management is responsible for the preparation and fair presentation of these financial statements in accordance with accounting principles generally accepted in the United States of America; this includes the design, implementation and maintenance of internal control relevant to the preparation and fair presentation of financial statements that are free from material misstatement, whether due to fraud or error.

**Accountant's Responsibility**
Our responsibility is to conduct the review engagements in accordance with Statements on Standards for Accounting and Review Services promulgated by the Accounting and Review Services Committee of the American Institute of Certified Public Accountants. Those standards require us to perform procedures to obtain limited assurance as a basis for reporting whether we are aware of any material modifications that should be made to the financial statements for them to be in accordance with accounting principles generally accepted in the United States of America. We believe that the results of our procedures provide a reasonable basis for our conclusion.

**Accountant's Conclusion**
Based on our reviews, we are not aware of any material modifications that should be made to the accompanying financial statements in order for them to be in accordance with accounting principles generally accepted in the United States of America.

**Other Matter**
The accompanying supplementary information is presented for purposes of additional analysis and is not a required part of the basic financial statements. Such information is the responsibility of management and was derived from, and relates directly to, the underlying accounting and other records used to prepare the financial statements. The supplementary information has been subjected to the review procedures applied in our review of the basic financial statements. We are not aware of any material modifications that should be made to the supplementary information. We have not audited the supplementary information and do not express an opinion on such information.

RSM US LLP

Birmingham, Alabama
September 25, 2019

THE POWER OF BEING UNDERSTOOD
AUDIT | TAX | CONSULTING



RSM US LLP is the U.S. member firm of RSM International, a global network of independent audit, tax, and consulting firms. Visit rsmus.com/aboutus for more information regarding RSM US LLP and RSM International.

**Revere Control Systems, Inc.**

**Balance Sheets**
**June 30, 2019 and 2018**
**See Independent Accountant's Review Report**

| | 2019 | 2018 |
|---|---|---|
| **Assets** | | |
| Current assets: | | |
| Cash | $ 858,061 | $ 550 |
| Restricted cash | - | 83,383 |
| Contracts receivable | 8,959,911 | 7,675,562 |
| Accounts receivable - employees | 59,362 | - |
| Income taxes receivable | 229,696 | 60,937 |
| Costs and estimated earnings in excess of billings on uncompleted contracts | 6,497,277 | 5,949,677 |
| Inventories | 117,053 | 99,047 |
| Prepaid expenses | 121,454 | 252,579 |
| **Total current assets** | 16,842,814 | 14,121,735 |
| Property and equipment, net | 2,123,237 | 2,278,109 |
| Other assets: | | |
| Deposits | 33,015 | 25,691 |
| Investments | 126,071 | 126,071 |
| **Total other assets** | 159,086 | 151,762 |
| **Total assets** | $ 19,125,137 | $ 16,551,606 |
| **Liabilities and Stockholders' Equity** | | |
| Current liabilities: | | |
| Bank overdraft | $ - | $ 58,997 |
| Line of credit | - | 1,163,988 |
| Current portion of long-term debt | 434,408 | 310,653 |
| Current portion of capital lease obligation | 36,402 | 24,246 |
| Accounts payable | 1,718,096 | 1,660,986 |
| Accrued expenses | 1,311,494 | 746,393 |
| Accrued and withheld taxes | 132,687 | 63,420 |
| Billings in excess of costs and estimated earnings on uncompleted contracts | 4,459,983 | 2,195,342 |
| **Total current liabilities** | 8,093,070 | 6,224,025 |
| Long-term liabilities: | | |
| Long-term debt, less current portion | 1,460,540 | 292,780 |
| Capital lease obligation, less current portion | 93,961 | 10,130 |
| Deferred income taxes | 218,943 | 281,254 |
| **Total long-term liabilities** | 1,773,444 | 584,164 |
| **Total liabilities** | 9,866,514 | 6,808,189 |
| Contingencies (Notes 9 and 11) | | |
| Stockholders' equity: | | |
| Common stock, par value $0.025 per share; 200,000 shares authorized and issued, 85,950 and 104,950 shares outstanding at June 30, 2019 and 2018, respectively | 5,000 | 5,000 |
| Additional paid-in capital | 183,407 | 143,595 |
| Retained earnings | 13,124,231 | 11,558,355 |
| | 13,312,638 | 11,706,950 |
| Less treasury stock, 114,050 and 95,050 shares, at cost, at June 30, 2019 and 2018, respectively | (4,054,015) | (1,963,533) |
| **Total stockholders' equity** | 9,258,623 | 9,743,417 |
| **Total liabilities and stockholders' equity** | $ 19,125,137 | $ 16,551,606 |

See notes to financial statements.

**Revere Control Systems, Inc.**

**Statements of Income**
**Years Ended June 30, 2019 and 2018**
**See Independent Accountant's Review Report**

| | 2019 | 2018 |
|---|---|---|
| Contract revenue | **$ 43,271,165** | $ 41,534,244 |
| Cost of contract revenue | **32,965,811** | 33,063,189 |
| **Gross profit** | **10,305,354** | 8,471,055 |
| Operating expenses | **8,421,699** | 7,974,665 |
| **Income from operations** | **1,883,655** | 496,390 |
| Other income (expense): | | |
| Interest expense | **(52,524)** | (91,182) |
| Interest income | **651** | 363 |
| Gain (loss) on sale of property and equipment | **15,832** | (344) |
| Other income | **47,617** | 27,075 |
| **Total other expense** | **11,576** | (64,088) |
| **Income before income taxes** | **1,895,231** | 432,302 |
| Income taxes: | | |
| Current income tax expense | **(391,666)** | (174,332) |
| Deferred income tax benefit | **62,311** | 93,573 |
| | **(329,355)** | (80,759) |
| **Net income** | **$ 1,565,876** | $ 351,543 |

See notes to financial statements.

RSM US LLP

**Independent Accountant's Review Report**

Board of Directors
Revere Control Systems, Inc.

We have reviewed the accompanying financial statements of Revere Control Systems, Inc. (the Company), which comprise the balance sheets as of June 30, 2020 and 2019, the related statements of income, changes in stockholders' equity and cash flows for the years then ended, and the related notes to the financial statements. A review includes primarily applying analytical procedures to management's financial data and making inquiries of management. A review is substantially less in scope than an audit, the objective of which is the expression of an opinion regarding the financial statements as a whole. Accordingly, we do not express such an opinion.

**Management's Responsibility for the Financial Statements**
Management is responsible for the preparation and fair presentation of these financial statements in accordance with accounting principles generally accepted in the United States of America; this includes the design, implementation and maintenance of internal control relevant to the preparation and fair presentation of financial statements that are free from material misstatement, whether due to fraud or error.

**Accountant's Responsibility**
Our responsibility is to conduct the review engagements in accordance with Statements on Standards for Accounting and Review Services promulgated by the Accounting and Review Services Committee of the American Institute of Certified Public Accountants. Those standards require us to perform procedures to obtain limited assurance as a basis for reporting whether we are aware of any material modifications that should be made to the financial statements for them to be in accordance with accounting principles generally accepted in the United States of America. We believe that the results of our procedures provide a reasonable basis for our conclusion.

**Accountant's Conclusion**
Based on our reviews, we are not aware of any material modifications that should be made to the accompanying financial statements in order for them to be in accordance with accounting principles generally accepted in the United States of America.

**Other Matter**
The accompanying supplementary information is presented for purposes of additional analysis and is not a required part of the basic financial statements. Such information is the responsibility of management and was derived from, and relates directly to, the underlying accounting and other records used to prepare the financial statements. The supplementary information has been subjected to the review procedures applied in our review of the basic financial statements. We are not aware of any material modifications that should be made to the supplementary information. We have not audited the supplementary information and do not express an opinion on such information.

RSM US LLP

Birmingham, Alabama
September 15, 2020



RSM US LLP is the U.S. member firm of RSM International, a global network of independent audit, tax, and consulting firms. Visit rsmus.com/aboutus for more information regarding RSM US LLP and RSM International.

**Revere Control Systems, Inc.**

**Balance Sheets**
**June 30, 2020 and 2019**
**See Independent Accountant's Review Report**

| | 2020 | 2019 |
|---|---|---|
| **Assets** | | |
| Current assets: | | |
| Cash | **$ 4,030,235** | $ 858,061 |
| Contracts receivable, net | **7,974,015** | 8,959,911 |
| Accounts receivable – employees | **12** | 59,362 |
| Income taxes receivable | **434,769** | 229,696 |
| Costs and estimated earnings in excess of billings on uncompleted contracts | **6,925,220** | 6,497,277 |
| Inventories | **225,903** | 117,053 |
| Prepaid expenses | **53,085** | 121,454 |
| **Total current assets** | **19,643,239** | 16,842,814 |
| Property and equipment, net | **1,887,862** | 2,123,237 |
| Other assets: | | |
| Deposits | **40,039** | 33,015 |
| Investments | **139,162** | 126,071 |
| Deferred income taxes | **245,377** | - |
| **Total other assets** | **424,578** | 159,086 |
| **Total assets** | **$ 21,955,679** | $ 19,125,137 |
| **Liabilities and Stockholders' Equity** | | |
| Current liabilities: | | |
| Current portion of long-term debt | **$ 1,274,527** | $ 434,408 |
| Current portion of capital lease obligation | **37,295** | 36,402 |
| Accounts payable | **1,429,342** | 1,718,096 |
| Accrued expenses | **1,124,198** | 1,311,494 |
| Accrued and withheld taxes | **289,594** | 132,687 |
| Billings in excess of costs and estimated earnings on uncompleted contracts | **3,584,532** | 4,459,983 |
| **Total current liabilities** | **7,739,488** | 8,093,070 |
| Long-term liabilities: | | |
| Long-term debt, less current portion | **2,344,896** | 1,460,540 |
| Capital lease obligation, less current portion | **66,900** | 93,961 |
| Deferred income taxes | **-** | 218,943 |
| **Total long-term liabilities** | **2,411,796** | 1,773,444 |
| **Total liabilities** | **10,151,284** | 9,866,514 |
| Contingencies (Notes 9 and 11) | | |
| Stockholders' equity: | | |
| Common stock, par value $0.025 per share; 200,000 shares authorized and issued, 85,950 shares outstanding at June 30, 2020 and 2019 | **5,000** | 5,000 |
| Additional paid-in capital | **183,407** | 183,407 |
| Retained earnings | **15,670,003** | 13,124,231 |
| | **15,858,410** | 13,312,638 |
| Less treasury stock, 114,050 shares, at cost, at June 30, 2020 and 2019 | **(4,054,015)** | (4,054,015) |
| **Total stockholders' equity** | **11,804,395** | 9,258,623 |
| **Total liabilities and stockholders' equity** | **$ 21,955,679** | $ 19,125,137 |

See notes to financial statements.

**Revere Control Systems, Inc.**

**Statements of Income**
**Years Ended June 30, 2020 and 2019**
**See Independent Accountant's Review Report**

| | 2020 | 2019 |
|---|---|---|
| Contract revenue | **$ 44,029,396** | $ 43,271,165 |
| Cost of contract revenue | **33,786,183** | 32,965,811 |
| **Gross profit** | **10,243,213** | 10,305,354 |
| Operating expenses | **8,010,127** | 8,421,699 |
| **Income from operations** | **2,233,086** | 1,883,655 |
| Other income (expense): | | |
| Interest expense | **(120,643)** | (52,524) |
| Interest income | **6,763** | 651 |
| Gain on sale of property and equipment | **6,331** | 15,832 |
| Other income | **208,964** | 47,617 |
| **Total other income** | **101,415** | 11,576 |
| **Income before income taxes** | **2,334,501** | 1,895,231 |
| Income taxes: | | |
| Current income tax expense | **(253,049)** | (391,666) |
| Deferred income tax benefit | **464,320** | 62,311 |
| | **211,271** | (329,355) |
| **Net income** | **$ 2,545,772** | $ 1,565,876 |

See notes to financial statements.

REVERE CONTROL SYSTEMS, INC.

ACTION BY THE BOARD OF DIRECTORS
BY UNANIMOUS WRITTEN CONSENT IN LIEU OF MEETING

The undersigned, being all members of the Board of Directors of Revere Control Systems, Inc., an Alabama corporation (the "Corporation"), hereby authorize, approve, ratify and consent to the following action:

RESOLVED, that Robert R. Adams, Thomas C. York, T. Rick Braddock, Nanette D. Johnson, and/or Jason J. English be authorized and directed to act on, execute, and deliver any agreements, resolutions, and/or documents required on behalf of the Corporation.

EXECUTED this 15th day of April 2020.

DIRECTORS:

Robert R. Adams

Thomas C. York

Thomas M. Adams

G. Gregory Graves

T. Rick Braddock

Jason W. Leeper

Nanette D. Johnson

Marc D. Handley

# President — Administration



**Robert R. Adams**
President/CEO
Birmingham Office

***Experience***

- Founded Revere Control Systems in 1980
- Responsibilities include: management of all company functions as well as directing the company's business development program
- Previous experience: 7 years in systems integration operations

***Specialty Areas***

- Business Administration
- Sales

***Training/Certification/Memberships***

- Co-founder of the Automation Alliance Group, and nationwide marketing alliance of independent system integrators

***Education***

- Business curriculum, University of Alabama at Birmingham

# Engineering



**Tom York, PE**
Chief Operating Officer

***Industry***
- Petrochemical
- Specialty Chemical
- Electrical Power Utility
- Pulp and Paper
- Wire and Cable

***Experience***
- Joined Revere Control Systems in 2014
- Responsibilities include: project management of large design/build projects; standardization and automation of engineering processes; integration of engineering and construction activities
- Previous experience: 21 years in Executive Management in control system integration and construction implementation; 8 years in Plant Engineering and Maintenance Management for wire and cable manufacturing; 7 years in Project Engineering for metals fabrication, tire and rubber manufacturing, and electrical power generation.
- HMI/SCADA: Wonderware Intouch, Rockwell RSView
- PLC: Allen Bradley
- Drives: Allen Bradley, Siemens
- Instrumentation: Rosemount, Yokogawa, Fisher, Foxboro, Honeywell

***Specialty Areas***
- Design/Build project implementation (total project scope execution)
- Continuous process control
- Front End Engineering Design (FEED) studies
- Site audit and scope development for complex projects
- Construction engineering (conduit/cable schedules, loop sheets, plot plans, etc.)
- Project management

***Training/Certification/Memberships***
- Registered Professional Engineer – Colorado #PE.0046953

***Education***
- BSEE Texas A&M University, College Station, TX

# Vice President Administration



**Nan Johnson, PMP**
Vice President of Municipal Systems
Birmingham Office

***Industry***
- Water & Wastewater
- Industrial

***Experience***
- Joined Revere Control Systems in 2007
- Responsibilities include: planning, organizing and directing the activities of Municipal Systems so that company objectives are efficiently achieved, company policies and procedures are adhered to, and high customer and employee satisfaction rates are maintained
- Previous experience: 18 years' experience in water/wastewater systems engineering and project management
- HMI/SCADA: FIX 32, iFIX, Cimplicity, RSView32, Wonderware
- Communications: LAN/WAN, Radio (MAS), Ethernet, Modbus, Serial
- PLC: GE 90-30, 90-70, VersaMax, Rx3i, Allen-Bradley SLC, ControlLogix, MicroLogix
- Instrumentation: Flow, Level, Analytical
- Database: SQL Server
- Other: Networks, Field Startup
- Programming Languages: VisualBasic

***Specialty Areas***
- HMI Configuration
- Communications/Networks
- Field Startup
- Project Management

***Training/Certification/Memberships***
- Six Sigma Greenbelt Certification
- Professional Employee Management Development Course (PEMDC)
- Firm Price Job Management (FPJM)
- Contract Awareness and Risk Exposure (CARE)
- Project Management Professional (PMP) Certification Number 1203917

***Education***
- BS Computer Science, University of South Carolina, Columbia, South Carolina
- Associate of Arts, Anderson College, Anderson, South Carolina

# Vice President Administration



**Jason Leeper, PE**
Vice President of Southwest Operations
Texarkana Office

***Industry***

- Oil and Gas
- Power
- Specialty Chemical
- Pulp and Paper
- Wood Products
- Mining and Aggregates

***Experience***

- Joined Revere Control Systems in 2014
- Responsibilities include: planning, organizing, and directing the activities for the Southwest Region so that company objectives are efficiently achieved, company policies and procedures are adhered to, and high customer and employee satisfaction rates are maintained.
- Previous experience: 17 years' experience in industrial automation, electrical engineering, project management, and executive management
- HMI/SCADA: RSView32, FTView, Citect
- Communications: Ethernet, Modbus, ControlNet, Serial
- PLC: Allen Bradley PLC 5, SLC, Logix Platforms
- Drives: AB, ABB, Siemens, Toshiba AC VFD's
- Instrumentation: HART, FF, Profibus
- Power Distribution: 600V-15kV MCCs, Switchgear, Transformers (GE, AB, ABB, Siemens, Eaton CH, SQUARED

***Specialty Areas***

- Front End Engineering Design (FEED) Studies
- I/E Design
- Commissioning/Startup
- Project Management

***Training/Certification/Membership***

- Licensed Professional Engineer in Electrical Engineering : AR #14704; AZ # 54293; CA #20144; FL #74158; IL #062.064979; LA #37349; MS #20931; NC #47668; NM #21268; NV #22022; OH #76580; OK #25897; TX #111106; UT #8797623-2202; and WV #19954

***Education***

- BSEE University of Arkansas, Fayetteville, AR

# Information Technology

**Marc Handley**
Vice President of Strategy Process Continuous Improvement



***Experience***

- Joined Revere Control Systems in September 2006
- Responsibilities include: Network and website design, security analysis, Server installation and upgrades, administration, optimization, and system maintenance; oversight for technology for the company and IT Department
- Previous experience: Prior to joining Revere, Marc has 7 years previous experience, including the design and implementation of converting from a Novell to Microsoft Network; converting GroupWise to MS Exchange for email; installation and maintenance of Spam and Internet Filters; installation of network applications, SQL Server, backup routines and implementation; provision of on-site technical support for customers including troubleshooting and repair of all types of networking equipment; installation, termination and testing of network cabling projects
- Other industry experience: Information Technology, Education, State and Local Government
- Communications: LAN/WAN, Windows 2000, XP, 7, 8, 10, MS Server 2000, 2003, 2008, 2012, Layer 2 and 3 devices, Wireless infrastructure, TCP/IP
- Database: SQL Server 7, 2000, 2005, 2008
- Other: Core Network Infrastructure, Server 2000, 2003, 2008, 2012, VMWare ESXi, and Network Security
- Programming Languages: Java, Visual Basic Scripting, PHP

***Specialty Areas***

- MS Server Architecture, Server 2000, 2003, 2008, Exchange 2003, 2007, 2010
- LAN/WAN Windows 2000, 2003, 2008, 2012 & Active Directory
- Network Administration

***Training/Certification/Memberships***

- Microsoft Certified Information Technology Professional (MCITP)
- Microsoft Certified Technology Specialists (MCTS)
- Microsoft Certified Systems Engineer (MCSE)
- Microsoft Certified Systems Administrator with Messaging (MCSAM)
- Microsoft Certified Systems Administrator (MCSA)
- Microsoft Network Product Specialists (MCNPS)
- Microsoft Certified Product Specialists (MCPS)
- Microsoft Certified Professional (MCP)
- Mikrotik Certified Network Associate (MTCNA)
- Ubiquiti Airmax Certified Administrator (UAC)
- Sun Certified Java Programmer (SCJP)
- Barracuda NG Firewall Certified Security Engineer
- Cisco IMINS – Cisco Certified Industrial Networking Specialist

***Education***

- Management Information Systems Curriculum, Auburn University, Auburn, Alabama

# Vice President Administration



**Tom Adams**
Vice President of Safety, Quality and Compliance
Birmingham Office

***Industry***
- Water & Wastewater

***Experience***
- Joined Revere Control Systems in 1980
- Responsibilities include: oversight of safety and quality improvement programs in all departments of the Company; to provide evaluations, procedures, training, inspections and reporting involved in implementation of the company's Health and Safety Plan; quality inspection for conformance to applicable external and internal codes; control systems design, programming, testing, implementation, service, and training.
- Previous experience: 4 years as a control systems draftsman/production technician
- HMI/SCADA: Wonderware, Genesis, PanelView, iFix
- Communications: Radio (MAS, Spread Spectrum), Leased Line
- PLC: Allen-Bradley, Bristol Babcock, OMRON
- Drives: Allen-Bradley, ABB, Magnetek, Benshaw, Dan Foss
- Instrumentation: Flow, Level, Analytical
- Database: Microsoft Access
- Other: Field Startup
- Programming Languages: Visual Basics

***Specialty Areas***
- Safety
- Quality Assurance

***Training/Certification/Memberships***
- OSHA General Industry 10-hour and 30-hour authorized trainer
- Member NFPA
- UL508A, UL6988, UL698 Category NNNY Inspector and Trainer
- ISO9001 trained
- CSIA BP&B internal auditor

***Education***
- Electrical Engineering curriculum, Jefferson State University, Birmingham, Alabama
- Mechanical Engineering curriculum, University of Alabama, Tuscaloosa, Alabama

# Municipal Business Development



**Jean Mead**
Business Development Manager
Florida Office

***Industry***

- Water & Wastewater

***Experience***

- Joined Revere Control Systems in 2018.
- Responsibilities include: development and management of business in Florida; generation of proposals, specifications, and bid pricing; assisting consulting engineers and contractors (contract negotiations); preparation of estimate/bids for instrumentation and control projects for municipal water and wastewater customers
- Previous experience: 20 years experience with a major instrumentation distributor in Florida specifying, quoting and closing municipal and industrial instrumentation projects. 10 years experience working with consulting engineers and owners to qualify for projects; estimating, bidding and closing projects with system integrators and providing project management.

***Specialty Areas***

- Process Instrumentation

***Memberships***

- ISA
- AWWA

***Education***

- Business Administration Curriculum, Polk State College
- Marketing Management Curriculum, Polk State College

# Project Management



**Peter Basily, PMP**
Project Manager
Charlotte Office

***Industry***
- Water & Wastewater
- Industrial

***Experience***
- Joined Revere Control Systems in 2018.
- Responsibilities include: oversight of all aspects of projects by planning, executing, monitoring, controlling and closing projects to quality standards within customer expectations and company objectives.
- Previous experience: Ten (10) years' experience as Electrical Design Engineer and Project Manager with experience in medium voltage switchgear, low voltage switchboard and motor control center.
- Equipment: Variable Frequency Drives, Soft Start Motor Controllers, Medium Voltage Switchgear, Motor Control Centers

***Specialty Areas***
- Medium Voltage Switchgear
- Motor Control Centers
- Variable Frequency Drives
- Project Management

***Training/Certification/Memberships***
- Project Management Professional (PMP) Certification Number 2050759
- Egyptian Syndicate of Engineers Member Number 07500/73

***Education***
- B.S. in Communications and Electronics Engineering, Alexandria Higher Institute for Engineering and Technology, Alexandria, Egypt

# Engineering



**Mark Salchli**
Engineering Group Manager
Lakeland Office

***Industry***
- Water & Wastewater
- Industrial – Specialty Minerals, Facility Management, Food & Beverage

***Experience***
- Joined Revere Control Systems in 2019.
- Responsibilities include: engineering team management, control systems design, programming, testing, implementation, startup, commissioning and support
- Previous experience: Thirty (30) in industrial automation and controls
- HMI/SCADA: Rockwell Software FactoryTalk View
- Instrumentation: Flow, Pressure, Level
- Communications: Ethernet, Ethernet/IP, ControlNet, Profibus
- PLC: Allen Bradley SLC, ControlLogix, CompactLogix
- Other: Design Management, Support and Troubleshooting

***Specialty Areas***
- Management of Engineering Team for Automation & Controls Projects
- Variable Frequency Drives

***Training/Certification/Memberships***
- Certified Power Quality Engineer (CPQ)
- Certified Energy Manager (CEM)
- Certified Six Sigma Green Belt

***Education***
- BSEET, Northern Kentucky University
- MBA, Thomas Moore College

# Engineering



Jack Zaiek
Project Engineer III
Lakeland Office

***Industry***
- Water & Wastewater
- Industrial

***Experience***
- Joined Revere Control Systems in 2019.
- Responsibilities include: control systems design, programming, testing, implementation, startup and service.
- Previous experience: Twelve (12) years of experience as Electrical Design, Programming, System Maintenance and Support.
- HMI/SCADA: Rockwell Software RSView, FactoryTalk
- Instrumentation: Flow, Pressure, Level
- Communications: Ethernet, ControlNet
- PLC: Allen Bradley SLC, ControlLogix, CompactLogix
- Other: Field Startup, Support and Troubleshooting

***Specialty Areas***
- PLC Hardware and Programming
- Safety System Controls

***Training/Certification/Memberships***
- Rockwell Automation FactoryTalk View SE Programming
- Rockwell Automation Studio 5000 ControlLogix Troubleshooting and Maintenance
- Rockwell Automation Studio 5000 ControlLogix Project Development
- Rockwell Automation Studio 5000 System Fundamentals & Ladder Logic Programming
- Industrial Network Architecture

***Education***
- BS, I.T.T. Technical Institute – Electromechanical Engineering, Emphasis in Electrical Engineering
- BS – Pontificia Universidad Católica Madre y Maestra (PUCMM)

OSHA's Form 300 (Rev. 01/2004)

# Log of Work-Related Injuries and Illnesses

**Attention:** This form contains information relating to employee health and must be used in a manner that protects the confidentiality of employees to the extent possible while the information is being used for occupational safety and health purposes.

Year 2016

**U.S. Department of Labor**
**Occupational Safety and Health Administration**

Form approved OMB no. 1218-0176

You must record information about every work-related death and about every work-related injury or illness that involves loss of consciousness, restricted work activity or job transfer, days away from work, or medical treatment beyond first aid. You must also record significant work-related injuries and illnesses that are diagnosed by a physician or licensed health care professional. You must also record work-related injuries and illnesses that meet any of the specific recording criteria listed in 29 CFR Part 1904.8 through 1904.12. Feel free to use two lines for a single case if you need to. You must complete an Injury and Illness Incident Report (OSHA Form 301) or equivalent form for each injury or illness recorded on this form. If you're not sure whether a case is recordable, call your local OSHA office for help.

*Establishment name* Revere Control Systems Inc

*City* Birmingham *State* AL

| *Identify the person* | | | *Describe the case* | | | *Classify the case* **CHECK ONLY ONE box for each case based on the most serious outcome for that case:** | | | | *Enter the number of days the injured or ill worker was:* | | *Check the "Injury" column or choose one type of illness:* | | | | | |
|---|---|---|---|---|---|---|---|---|---|---|---|---|---|---|---|---|---|
| | | | | | | | | Remained at Work | | | | (M) | | | | | |
| (A) Case no. | (B) Employee's name | (C) Job title *(e.g., Welder)* | (D) Date of injury or onset of illness | (E) Where the event occurred *(e.g., Loading dock north end)* | (F) Describe injury or illness, parts of body affected, and object/substance that directly injured or made person ill *(e.g., Second degree burns on right forearm from acetylene torch)* | Death (G) | Days away from work (H) | Job transfer or restriction (I) | Other recordable cases (J) | Away from work (K) | On job transfer or restriction (L) | Injury (1) | Skin disorder (2) | Respiratory condition (3) | Poisoning (4) | Hearing loss (5) | All other illnesses (6) |
| 1 | | Field Service Technician | 12/15 month/day | Kinston, NC, WWTP, Metering Vault | Laceration on top of head requiring approximately 10 staples. Employee stepped back into edge of sump well, lost balance and fell to same level. Head contacted pipe bracket on wall. | ☐ | ☐ | ☐ | ☒ | 0 days | 0 days | ☒ | ☐ | ☐ | ☐ | ☐ | ☐ |
| | | | month/day | | | ☐ | ☐ | ☐ | ☐ | days | days | ☐ | ☐ | ☐ | ☐ | ☐ | ☐ |
| | | | month/day | | | ☐ | ☐ | ☐ | ☐ | days | days | ☐ | ☐ | ☐ | ☐ | ☐ | ☐ |
| | | | month/day | | | ☐ | ☐ | ☐ | ☐ | days | days | ☐ | ☐ | ☐ | ☐ | ☐ | ☐ |
| | | | month/day | | | ☐ | ☐ | ☐ | ☐ | days | days | ☐ | ☐ | ☐ | ☐ | ☐ | ☐ |
| | | | month/day | | | ☐ | ☐ | ☐ | ☐ | days | days | ☐ | ☐ | ☐ | ☐ | ☐ | ☐ |
| | | | month/day | | | ☐ | ☐ | ☐ | ☐ | days | days | ☐ | ☐ | ☐ | ☐ | ☐ | ☐ |
| | | | | | **totals** ➤ | 0 | 0 | 0 | 1 | 0 | 0 | 1 | 0 | 0 | 0 | 0 | 0 |
| | | | | | | | | | | | | Injury (1) | Skin disorder (2) | Respiratory condition (3) | Poisoning (4) | Hearing loss (5) | All other illnesses (6) |

Public reporting burden for this collection of information is estimated to average 14 minutes per response, including time to review the instructions, search and gather the data needed, and complete and review the collection of information. Persons are not required to respond to the collection of information unless it displays a currently valid OMB control number. If you have any comments about these estimates or any other aspects of this data collection, contact: US Department of Labor, OSHA Office of Statistical Analysis, Room N-3644, 200 Constitution Avenue, NW, Washington, DC 20210. Do not send the completed forms to this office.

*Be sure to transfer these totals to the Summary page (Form 300A) before you post it.*

OSHA's Form 300A (Rev. 01/2004)

# Summary of Work-Related Injuries and Illnesses

Year 2016

U.S. Department of Labor
Occupational Safety and Health Administration

Form approved OMB no. 1218-0176

*All establishments covered by Part 1904 must complete this Summary page, even if no work-related injuries or illnesses occurred during the year. Remember to review the Log to verify that the entries are complete and accurate before completing this summary.*

*Using the Log, count the individual entries you made for each category. Then write the totals below, making sure you've added the entries from every page of the Log. If you had no cases, write "0."*

*Employees, former employees, and their representatives have the right to review the OSHA Form 300 in its entirety. They also have limited access to the OSHA Form 301 or its equivalent. See 29 CFR Part 1904.35, in OSHA's recordkeeping rule, for further details on the access provisions for these forms.*

## Number of Cases

| Total number of deaths | Total number of cases with days away from work | Total number of cases with job transfer or restriction | Total number of other recordable cases |
|---|---|---|---|
| 0 | 0 | 0 | 1 |
| (G) | (H) | (I) | (J) |

## Number of Days

| Total number of days away from work | Total number of days of job transfer or restriction |
|---|---|
| 0 | 0 |
| (K) | (L) |

## Injury and Illness Types

| Total number of . . . | (M) |
|---|---|
| (1) Injuries | 1 |
| (2) Skin disorders | 0 |
| (3) Respiratory conditions | 0 |
| (4) Poisonings | 0 |
| (5) Hearing loss | 0 |
| (6) All other illnesses | 0 |

**Post this Summary page from February 1 to April 30 of the year following the year covered by the form.**

Public reporting burden for this collection of information is estimated to average 50 minutes per response, including time to review the instructions, search and gather the data needed, and complete and review the collection of information. Persons are not required to respond to the collection of information unless it displays a currently valid OMB control number. If you have any comments about these estimates or any other aspects of this data collection, contact: US Department of Labor, OSHA Office of Statistical Analysis, Room N-3644, 200 Constitution Avenue, NW, Washington, DC 20210. Do not send the completed forms to this office.

## Establishment information

Your establishment name: Revere Control Systems Inc

Street: 2240 Rocky Ridge Rd

City: Birmingham State: AL ZIP: 35216

Industry description (*e.g., Manufacture of motor truck trailers*)
Electrical Contractors and Other Wiring Installation

Standard Industrial Classification (SIC), if known (*e.g., 3715*)
1711

OR

North American Industrial Classification (NAICS), if known (e.g., 336212)
238210

## Employment information *(If you don't have these figures, see the Worksheet on the back of this page to estimate.)*

Annual average number of employees: 182

Total hours worked by all employees last year: 351106

## Sign here

**Knowingly falsifying this document may result in a fine.**

I certify that I have examined this document and that to the best of my knowledge the entries are true, accurate, and complete.

Thomas M. Adams — Company executive
V.P. SAFETY & QUALITY DIRECTOR — Title
(205) 271-9817 — Phone
1/9/2017 — Date

OSHA's Form 300 (Rev. 01/2004)

# Log of Work-Related Injuries and Illnesses

**Attention:** This form contains information relating to employee health and must be used in a manner that protects the confidentiality of employees to the extent possible while the information is being used for occupational safety and health purposes.

Year 2017

**U.S. Department of Labor**
**Occupational Safety and Health Administration**

Form approved OMB no. 1218-0176

You must record information about every work-related death and about every work-related injury or illness that involves loss of consciousness, restricted work activity or job transfer, days away from work, or medical treatment beyond first aid. You must also record significant work-related injuries and illnesses that are diagnosed by a physician or licensed health care professional. You must also record work-related injuries and illnesses that meet any of the specific recording criteria listed in 29 CFR Part 1904.8 through 1904.12. Feel free to use two lines for a single case if you need to. You must complete an Injury and Illness Incident Report (OSHA Form 301) or equivalent form for each injury or illness recorded on this form. If you're not sure whether a case is recordable, call your local OSHA office for help.

Establishment name: Revere Control Systems, Inc.

City: Birmingham State: Alabama

## Identify the person

## Describe the case

## Classify the case

**CHECK ONLY ONE box for each case based on the most serious outcome for that case:**

**Enter the number of days the injured or ill worker was:**

**Check the "Injury" column or choose one type of illness:**

| (A) Case no. | (B) Employee's name | (C) Job title (e.g., Welder) | (D) Date of injury or onset of illness | (E) Where the event occurred (e.g., Loading dock north end) | (F) Describe injury or illness, parts of body affected, and object/substance that directly injured or made person ill (e.g., Second degree burns on right forearm from acetylene torch) | (G) Death | (H) Days away from work | Remained at Work: (I) Job transfer or restriction | Remained at Work: (J) Other recordable cases | (K) Away from work | (L) On job transfer or restriction | (M) Injury (1) | Skin disorder (2) | Respiratory condition (3) | Poisoning (4) | Hearing loss (5) | All other illnesses (6) |
|---|---|---|---|---|---|---|---|---|---|---|---|---|---|---|---|---|---|
| | | | month/day | | | ☐ | ☐ | ☐ | ☐ | ____ days | ____ days | ☐ | ☐ | ☐ | ☐ | ☐ | ☐ |
| | | | month/day | | | ☐ | ☐ | ☐ | ☐ | ____ days | ____ days | ☐ | ☐ | ☐ | ☐ | ☐ | ☐ |
| | | | month/day | | | ☐ | ☐ | ☐ | ☐ | ____ days | ____ days | ☐ | ☐ | ☐ | ☐ | ☐ | ☐ |
| | | | month/day | | | ☐ | ☐ | ☐ | ☐ | ____ days | ____ days | ☐ | ☐ | ☐ | ☐ | ☐ | ☐ |
| | | | month/day | | | ☐ | ☐ | ☐ | ☐ | ____ days | ____ days | ☐ | ☐ | ☐ | ☐ | ☐ | ☐ |
| | | | month/day | | | ☐ | ☐ | ☐ | ☐ | ____ days | ____ days | ☐ | ☐ | ☐ | ☐ | ☐ | ☐ |
| | | | month/day | | | ☐ | ☐ | ☐ | ☐ | ____ days | ____ days | ☐ | ☐ | ☐ | ☐ | ☐ | ☐ |
| | | | month/day | | | ☐ | ☐ | ☐ | ☐ | ____ days | ____ days | ☐ | ☐ | ☐ | ☐ | ☐ | ☐ |
| | | | | | **totals** ➤ | 0 | 0 | 0 | 0 | 0 | 0 | 0 | 0 | 0 | 0 | 0 | 0 |

*Be sure to transfer these totals to the Summary page (Form 300A) before you post it.*

Public reporting burden for this collection of information is estimated to average 14 minutes per response, including time to review the instructions, search and gather the data needed, and complete and review the collection of information. Persons are not required to respond to the collection of information unless it displays a currently valid OMB control number. If you have any comments about these estimates or any other aspects of this data collection, contact: US Department of Labor, OSHA Office of Statistical Analysis, Room N-3644, 200 Constitution Avenue, NW, Washington, DC 20210. Do not send the completed forms to this office.



Injury (1) | Skin disorder (2) | Respiratory condition (3) | Poisoning (4) | Hearing loss (5) | All other illnesses (6)

OSHA's Form 300A (Rev. 01/2004)

# Summary of Work-Related Injuries and Illnesses

Year 2017

**U.S. Department of Labor**
**Occupational Safety and Health Administration**

Form approved OMB no. 1218-0176

*All establishments covered by Part 1904 must complete this Summary page, even if no work-related injuries or illnesses occurred during the year. Remember to review the Log to verify that the entries are complete and accurate before completing this summary.*

*Using the Log, count the individual entries you made for each category. Then write the totals below, making sure you've added the entries from every page of the Log. If you had no cases, write "0."*

*Employees, former employees, and their representatives have the right to review the OSHA Form 300 in its entirety. They also have limited access to the OSHA Form 301 or its equivalent. See 29 CFR Part 1904.35, in OSHA's recordkeeping rule, for further details on the access provisions for these forms.*

## Number of Cases

| Total number of deaths | Total number of cases with days away from work | Total number of cases with job transfer or restriction | Total number of other recordable cases |
|---|---|---|---|
| 0 | 0 | 0 | 0 |
| (G) | (H) | (I) | (J) |

## Number of Days

| Total number of days away from work | Total number of days of job transfer or restriction |
|---|---|
| 0 | 0 |
| (K) | (L) |

## Injury and Illness Types

| Total number of . . . | (M) | | |
|---|---|---|---|
| (1) Injuries | 0 | (4) Poisonings | 0 |
| | | (5) Hearing loss | 0 |
| (2) Skin disorders | 0 | (6) All other illnesses | 0 |
| (3) Respiratory conditions | 0 | | |

**Post this Summary page from February 1 to April 30 of the year following the year covered by the form.**

Public reporting burden for this collection of information is estimated to average 50 minutes per response, including time to review the instructions, search and gather the data needed, and complete and review the collection of information. Persons are not required to respond to the collection of information unless it displays a currently valid OMB control number. If you have any comments about these estimates or any other aspects of this data collection, contact: US Department of Labor, OSHA Office of Statistical Analysis, Room N-3644, 200 Constitution Avenue, NW, Washington, DC 20210. Do not send the completed forms to this office.

## Establishment information

Your establishment name: Revere Control Systems, Inc.

Street: 2240 Rocky Ridge Road

City: Birmingham State: AL ZIP: 35216

Industry description (*e.g., Manufacture of motor truck trailers*)
Electrical Contractors and Other Wiring Installation

Standard Industrial Classification (SIC), if known (*e.g., 3715*)
1711

OR

North American Industrial Classification (NAICS), if known (e.g., 336212)
238210

## Employment information *(If you don't have these figures, see the Worksheet on the back of this page to estimate.)*

Annual average number of employees: 193

Total hours worked by all employees last year: 410144

## Sign here

**Knowingly falsifying this document may result in a fine.**

I certify that I have examined this document and that to the best of my knowledge the entries are true, accurate, and complete.

Thomas M. Adams — VP OF SAFETY, QUALITY & COMPLIANCE
Company executive — Title

(205) 271-9817 — 1/17/2018
Phone — Date

OSHA's Form 300 (Rev. 01/2004)

# Log of Work-Related Injuries and Illnesses

**Attention:** This form contains information relating to employee health and must be used in a manner that protects the confidentiality of employees to the extent possible while the information is being used for occupational safety and health purposes.

Year 2018

**U.S. Department of Labor**
**Occupational Safety and Health Administration**

Form approved OMB no. 1218-0176

You must record information about every work-related death and about every work-related injury or illness that involves loss of consciousness, restricted work activity or job transfer, days away from work, or medical treatment beyond first aid. You must also record significant work-related injuries and illnesses that are diagnosed by a physician or licensed health care professional. You must also record work-related injuries and illnesses that meet any of the specific recording criteria listed in 29 CFR Part 1904.8 through 1904.12. Feel free to use two lines for a single case if you need to. You must complete an Injury and Illness Incident Report (OSHA Form 301) or equivalent form for each injury or illness recorded on this form. If you're not sure whether a case is recordable, call your local OSHA office for help.

*Establishment name* Revere Control Systems, Inc.

*City* Birmingham *State* AL

| *Identify the person* | | | *Describe the case* | | | *Classify the case* **CHECK ONLY ONE box for each case based on the most serious outcome for that case:** | | | | *Enter the number of days the injured or ill worker was:* | | *Check the "Injury" column or choose one type of illness:* | | | | | |
|---|---|---|---|---|---|---|---|---|---|---|---|---|---|---|---|---|---|
| | | | | | | | | Remained at Work | | | | (M) | | | | | |
| (A) Case no. | (B) Employee's name | (C) Job title *(e.g., Welder)* | (D) Date of injury or onset of illness | (E) Where the event occurred *(e.g., Loading dock north end)* | (F) Describe injury or illness, parts of body affected, and object/substance that directly injured or made person ill *(e.g., Second degree burns on right forearm from acetylene torch)* | Death (G) | Days away from work (H) | Job transfer or restriction (I) | Other record-able cases (J) | Away from work (K) | On job transfer or restriction (L) | Injury (1) | Skin disorder (2) | Respiratory condition (3) | Poisoning (4) | Hearing loss (5) | All other illnesses (6) |
| 1 | | Electrical Technician | 5/29 month/day | Production Area, Bldg. 1 | Scratched left eye. Tossing a pallet onto a stack of unused wooden pallets a piece of debris flew into the employees left eye causing the scratch and irritation. | ☐ | ☐ | ☐ | ☒ | 0 days | 0 days | ☒ | ☐ | ☐ | ☐ | ☐ | ☐ |
| 2 | | Electrical Technician | 12/3 month/day | Production Area, Bldg. 1 | Pinched Middle Finger when lowering a 72lb. panel assembly onto a pallet with help from another worker. | ☐ | ☐ | ☐ | ☒ | 0 days | 0 days | ☒ | ☐ | ☐ | ☐ | ☐ | ☐ |
| | | | month/day | | | ☐ | ☐ | ☐ | ☐ | ___ days | ___ days | ☐ | ☐ | ☐ | ☐ | ☐ | ☐ |
| | | | month/day | | | ☐ | ☐ | ☐ | ☐ | ___ days | ___ days | ☐ | ☐ | ☐ | ☐ | ☐ | ☐ |
| | | | month/day | | | ☐ | ☐ | ☐ | ☐ | ___ days | ___ days | ☐ | ☐ | ☐ | ☐ | ☐ | ☐ |
| | | | month/day | | | ☐ | ☐ | ☐ | ☐ | ___ days | ___ days | ☐ | ☐ | ☐ | ☐ | ☐ | ☐ |
| | | | month/day | | | ☐ | ☐ | ☐ | ☐ | ___ days | ___ days | ☐ | ☐ | ☐ | ☐ | ☐ | ☐ |
| | | | | | ***totals*** | 0 | 0 | 0 | 2 | 0 | 0 | 2 | 0 | 0 | 0 | 0 | 0 |

Public reporting burden for this collection of information is estimated to average 14 minutes per response, including time to review the instructions, search and gather the data needed, and complete and review the collection of information. Persons are not required to respond to the collection of information unless it displays a currently valid OMB control number. If you have any comments about these estimates or any other aspects of this data collection, contact: US Department of Labor, OSHA Office of Statistical Analysis, Room N-3644, 200 Constitution Avenue, NW, Washington, DC 20210. Do not send the completed forms to this office.

*Be sure to transfer these totals to the Summary page (Form 300A) before you post it.*



Injury (1) Skin disorder (2) Respiratory condition (3) Poisoning (4) Hearing loss (5) All other illnesses (6)

OSHA's Form 300A (Rev. 01/2004)

# Summary of Work-Related Injuries and Illnesses

Year 2018

**U.S. Department of Labor**
**Occupational Safety and Health Administration**

Form approved OMB no. 1218-0176

*All establishments covered by Part 1904 must complete this Summary page, even if no work-related injuries or illnesses occurred during the year. Remember to review the Log to verify that the entries are complete and accurate before completing this summary.*

*Using the Log, count the individual entries you made for each category. Then write the totals below, making sure you've added the entries from every page of the Log. If you had no cases, write "0."*

*Employees, former employees, and their representatives have the right to review the OSHA Form 300 in its entirety. They also have limited access to the OSHA Form 301 or its equivalent. See 29 CFR Part 1904.35, in OSHA's recordkeeping rule, for further details on the access provisions for these forms.*

## Number of Cases

| Total number of deaths | Total number of cases with days away from work | Total number of cases with job transfer or restriction | Total number of other recordable cases |
|---|---|---|---|
| 0 | 0 | 0 | 2 |
| (G) | (H) | (I) | (J) |

## Number of Days

| Total number of days away from work | Total number of days of job transfer or restriction |
|---|---|
| 0 | 0 |
| (K) | (L) |

## Injury and Illness Types

| Total number of . . . | (M) | | |
|---|---|---|---|
| (1) Injuries | 2 | (4) Poisonings | 0 |
| | | (5) Hearing loss | 0 |
| (2) Skin disorders | 0 | (6) All other illnesses | 0 |
| (3) Respiratory conditions | 0 | | |

**Post this Summary page from February 1 to April 30 of the year following the year covered by the form.**

Public reporting burden for this collection of information is estimated to average 50 minutes per response, including time to review the instructions, search and gather the data needed, and complete and review the collection of information. Persons are not required to respond to the collection of information unless it displays a currently valid OMB control number. If you have any comments about these estimates or any other aspects of this data collection, contact: US Department of Labor, OSHA Office of Statistical Analysis, Room N-3644, 200 Constitution Avenue, NW, Washington, DC 20210. Do not send the completed forms to this office.

## Establishment information

Your establishment name: Revere Control Systems, Inc.

Street: 2240 Rocky Ridge Road

City: Birmingham State: AL ZIP: 35216

Industry description (*e.g., Manufacture of motor truck trailers*)
Electrical Contractors and Other Wiring Installation

Standard Industrial Classification (SIC), if known (*e.g., 3715*)
1711

OR

North American Industrial Classification (NAICS), if known (e.g., 336212)
238210

## Employment information *(If you don't have these figures, see the Worksheet on the back of this page to estimate.)*

Annual average number of employees: 195

Total hours worked by all employees last year: 390263

## Sign here

**Knowingly falsifying this document may result in a fine.**

I certify that I have examined this document and that to the best of my knowledge the entries are true, accurate, and complete.

Thomas M. Adams — Company executive
VP OF SAFETY, QUALITY & COMPLIANCE — Title
(205) 271-9817 — Phone
1/14/2019 — Date

OSHA's Form 300 (Rev. 01/2004)

# Log of Work-Related Injuries and Illnesses

**Attention:** This form contains information relating to employee health and must be used in a manner that protects the confidentiality of employees to the extent possible while the information is being used for occupational safety and health purposes.

Year 2019

**U.S. Department of Labor**
**Occupational Safety and Health Administration**

Form approved OMB no. 1218-0176

You must record information about every work-related death and about every work-related injury or illness that involves loss of consciousness, restricted work activity or job transfer, days away from work, or medical treatment beyond first aid. You must also record significant work-related injuries and illnesses that are diagnosed by a physician or licensed health care professional. You must also record work-related injuries and illnesses that meet any of the specific recording criteria listed in 29 CFR Part 1904.8 through 1904.12. Feel free to use two lines for a single case if you need to. You must complete an Injury and Illness Incident Report (OSHA Form 301) or equivalent form for each injury or illness recorded on this form. If you're not sure whether a case is recordable, call your local OSHA office for help.

Establishment name: Revere Control Systems Inc

City: Birmingham State: AL

| Identify the person | | | Describe the case | | | Classify the case (CHECK ONLY ONE box for each case based on the most serious outcome for that case:) | | | | Enter the number of days the injured or ill worker was: | | Check the "Injury" column or choose one type of illness: | | | | | |
|---|---|---|---|---|---|---|---|---|---|---|---|---|---|---|---|---|---|
| | | | | | | | | Remained at Work | | | | (M) | | | | | |
| (A) Case no. | (B) Employee's name | (C) Job title (e.g., Welder) | (D) Date of injury or onset of illness | (E) Where the event occurred (e.g., Loading dock north end) | (F) Describe injury or illness, parts of body affected, and object/substance that directly injured or made person ill (e.g., Second degree burns on right forearm from acetylene torch) | Death (G) | Days away from work (H) | Job transfer or restriction (I) | Other record-able cases (J) | Away from work (K) | On job transfer or restriction (L) | Injury (1) | Skin disorder (2) | Respiratory condition (3) | Poisoning (4) | Hearing loss (5) | All other illnesses (6) |
| 2019-01 | | Field Service Specialist | 7/12 month/day | QC area of the stacker | Strain of adductor muscle, fascia and tendon of thigh. Stepped between two rollers onto a guard that bent or gave way. | ☐ | ☐ | ☐ | ☒ | 0 days | 0 days | ☑ | ☐ | ☐ | ☐ | ☐ | ☐ |
| | | | month/day | | | ☐ | ☐ | ☐ | ☐ | days | days | ☐ | ☐ | ☐ | ☐ | ☐ | ☐ |
| | | | month/day | | | ☐ | ☐ | ☐ | ☐ | days | days | ☐ | ☐ | ☐ | ☐ | ☐ | ☐ |
| | | | month/day | | | ☐ | ☐ | ☐ | ☐ | days | days | ☐ | ☐ | ☐ | ☐ | ☐ | ☐ |
| | | | month/day | | | ☐ | ☐ | ☐ | ☐ | days | days | ☐ | ☐ | ☐ | ☐ | ☐ | ☐ |
| | | | month/day | | | ☐ | ☐ | ☐ | ☐ | days | days | ☐ | ☐ | ☐ | ☐ | ☐ | ☐ |
| | | | month/day | | | ☐ | ☐ | ☐ | ☐ | days | days | ☐ | ☐ | ☐ | ☐ | ☐ | ☐ |
| | | | month/day | | | ☐ | ☐ | ☐ | ☐ | days | days | ☐ | ☐ | ☐ | ☐ | ☐ | ☐ |
| | | | month/day | | | ☐ | ☐ | ☐ | ☐ | days | days | ☐ | ☐ | ☐ | ☐ | ☐ | ☐ |
| | | | month/day | | | ☐ | ☐ | ☐ | ☐ | days | days | ☐ | ☐ | ☐ | ☐ | ☐ | ☐ |
| **totals** ➤ | | | | | | 0 | 0 | 0 | 1 | 0 | 0 | 1 | 0 | 0 | 0 | 0 | 0 |
| | | | | | | | | | | | | Injury (1) | Skin disorder (2) | Respiratory condition (3) | Poisoning (4) | Hearing loss (5) | All other illnesses (6) |

*Be sure to transfer these totals to the Summary page (Form 300A) before you post it.*



Public reporting burden for this collection of information is estimated to average 14 minutes per response, including time to review the instructions, search and gather the data needed, and complete and review the collection of information. Persons are not required to respond to the collection of information unless it displays a currently valid OMB control number. If you have any comments about these estimates or any other aspects of this data collection, contact: US Department of Labor, OSHA Office of Statistical Analysis, Room N-3644, 200 Constitution Avenue, NW, Washington, DC 20210. Do not send the completed forms to this office.

OSHA's Form 300A (Rev. 01/2004)

# Summary of Work-Related Injuries and Illnesses

Year 2019

**U.S. Department of Labor**
**Occupational Safety and Health Administration**

Form approved OMB no. 1218-0176

*All establishments covered by Part 1904 must complete this Summary page, even if no work-related injuries or illnesses occurred during the year. Remember to review the Log to verify that the entries are complete and accurate before completing this summary.*

*Using the Log, count the individual entries you made for each category. Then write the totals below, making sure you've added the entries from every page of the Log. If you had no cases, write "0."*

*Employees, former employees, and their representatives have the right to review the OSHA Form 300 in its entirety. They also have limited access to the OSHA Form 301 or its equivalent. See 29 CFR Part 1904.35, in OSHA's recordkeeping rule, for further details on the access provisions for these forms.*

## Number of Cases

| Total number of deaths | Total number of cases with days away from work | Total number of cases with job transfer or restriction | Total number of other recordable cases |
|---|---|---|---|
| 0 | 0 | 0 | 1 |
| (G) | (H) | (I) | (J) |

## Number of Days

| Total number of days away from work | Total number of days of job transfer or restriction |
|---|---|
| 0 | 0 |
| (K) | (L) |

## Injury and Illness Types

| Total number of . . . | (M) |
|---|---|
| (1) Injuries | 1 |
| (2) Skin disorders | 0 |
| (3) Respiratory conditions | 0 |
| (4) Poisonings | 0 |
| (5) Hearing loss | 0 |
| (6) All other illnesses | 0 |

**Post this Summary page from February 1 to April 30 of the year following the year covered by the form.**

Public reporting burden for this collection of information is estimated to average 50 minutes per response, including time to review the instructions, search and gather the data needed, and complete and review the collection of information. Persons are not required to respond to the collection of information unless it displays a currently valid OMB control number. If you have any comments about these estimates or any other aspects of this data collection, contact: US Department of Labor, OSHA Office of Statistical Analysis, Room N-3644, 200 Constitution Avenue, NW, Washington, DC 20210. Do not send the completed forms to this office.

## Establishment information

**Your establishment name** Revere Control Systems Inc

Street 2240 Rocky Ridge Rd

City Birmingham State AL ZIP 35216

Industry description (*e.g., Manufacture of motor truck trailers*)
ELECTRICAL CONTRACTORS & OTHER WIRING INSTALLATION

Standard Industrial Classification (SIC), if known (*e.g., 3715*)
1711

OR

North American Industrial Classification (NAICS), if known (e.g., 336212)
238210

## Employment information

***Employment information*** *(If you don't have these figures, see the Worksheet on the back of this page to estimate.)*

Annual average number of employees 184

Total hours worked by all employees last year 384,046

## Sign here

**Knowingly falsifying this document may result in a fine.**

I certify that I have examined this document and that to the best of my knowledge the entries are true, accurate, and complete.

Thomas M. Adams VP OF SAFETY & QUALITY
Company executive Title

(205) 271 - 9817 1/17/2020
Phone Date

# OSHA's Form 300 (Rev. 01/2004)

# Log of Work-Related Injuries and Illnesses

**Attention:** This form contains information relating to employee health and must be used in a manner that protects the confidentiality of employees to the extent possible while the information is being used for occupational safety and health purposes.

Year 2020

**U.S. Department of Labor**
Occupational Safety and Health Administration

You must record information about every work-related injury or illness that involves loss of consciousness, restricted work activity or job transfer, days away from work, or medical treatment beyond first aid. You must also record significant work-related injuries and illnesses that are diagnosed by a physician or licensed health care professional. You must also record work-related injuries and illnesses that meet any of the specific recording criteria listed in 29 CFR 1904.8 through 1904.12. Feel free to use two lines for a single case if you need to. You must complete an injury and illness incident report (OSHA Form 301) or equivalent form for each injury or illness recorded on this form. If you're not sure whether a case is recordable, call your local OSHA office for help.

Form approved OMB no. 1218-0176

Establishment name: Revere Control Systems, Inc.

City: Birmingham State: Alabama

| Identify the person | | | | Describe the case | | Classify the case | | | | | | | | | | | |
|---|---|---|---|---|---|---|---|---|---|---|---|---|---|---|---|---|---|
| | | | | | | **CHECK ONLY ONE** box for each case based on the most serious outcome for that case: | | | | Enter the number of days the injured or ill worker was: | | Check the "injury" column or choose one type of illness: | | | | | |
| (A) Case No. | (B) Employee's Name | (C) Job Title (e.g., Welder) | (D) Date of injury or onset of illness (mo./day) | (E) Where the event occurred (e.g. Loading dock north end) | (F) Describe injury or illness, parts of body affected, and object/substance that directly injured or made person ill (e.g. Second degree burns on right forearm from acetylene torch) | Death | Days away from work | Remained at work | | Away From Work (days) | On job transfer or restriction (days) | (M) Injury | Skin Disorder | Respiratory Condition | Poisoning | Hearing Loss | All other illnesses |
| | | | | | | | | Job transfer or restriction | Other record-able cases | | | | | | | | |
| | | | | | | (G) | (H) | (I) | (J) | (K) | (L) | (1) | (2) | (3) | (4) | (5) | (6) |
| | | | | | | | | | | | | | | | | | |
| | | | | | | | | | | | | | | | | | |
| | | | | | | | | | | | | | | | | | |
| | | | | | | | | | | | | | | | | | |
| | | | | | | | | | | | | | | | | | |
| | | | | | | | | | | | | | | | | | |
| | | | | | | | | | | | | | | | | | |
| | | | | | | | | | | | | | | | | | |
| | | | | | | | | | | | | | | | | | |
| | | | | | | | | | | | | | | | | | |
| | | | | | | | | | | | | | | | | | |
| | | | | | **Page totals** | *0* | *0* | *0* | *0* | *0* | *0* | *0* | *0* | *0* | *0* | *0* | *0* |

Be sure to transfer these totals to the Summary page (Form 300A) before you post it.

| Injury | Skin Disorder | Respiratory Condition | Poisoning | Hearing Loss | All other illnesses |
|---|---|---|---|---|---|
| (1) | (2) | (3) | (4) | (5) | (6) |

Public reporting burden for this collection of information is estimated to average 14 minutes per response, including time to review the instruction, search and gather the data needed, and complete and review the collection of information. Persons are not required to respond to the collection of information unless it displays a currently valid OMB control number. If you have any comments about these estimates or any aspects of this data collection, contact: US Department of Labor, OSHA Office of Statistics, Room N-3644, 200 Constitution Ave, NW, Washington, DC 20210. Do not send the completed forms to this office.

# OSHA's Form 300A (Rev. 01/2004)

# Summary of Work-Related Injuries and Illnesses

Year 2020

U.S. Department of Labor
Occupational Safety and Health Administration

Form approved OMB no. 1218-0176

*All establishments covered by Part 1904 must complete this Summary page, even if no injuries or illnesses occurred during the year. Remember to review the Log to verify that the entries are complete*

*Using the Log, count the individual entries you made for each category. Then write the totals below, making sure you've added the entries from every page of the log. If you had no cases write "0."*

*Employees former employees, and their representatives have the right to review the OSHA Form 300 in its entirety. They also have limited access to the OSHA Form 301 or its equivalent. See 29 CFR 1904.35, in OSHA's Recordkeeping rule, for further details on the access provisions for these forms.*

## Number of Cases

| Total number of deaths | Total number of cases with days away from work | Total number of cases with job transfer or restriction | Total number of other recordable cases |
|---|---|---|---|
| 0 | 0 | 0 | 0 |
| (G) | (H) | (I) | (J) |

## Number of Days

| Total number of days away from work | Total number of days of job transfer or restriction |
|---|---|
| 0 | 0 |
| (K) | (L) |

## Injury and Illness Types

| Total number of... | (M) | | (M) |
|---|---|---|---|
| (1) Injury | 0 | (4) Poisoning | 0 |
| (2) Skin Disorder | 0 | (5) Hearing Loss | 0 |
| (3) Respiratory Condition | 0 | (6) All Other Illnesses | 0 |

**Post this Summary page from February 1 to April 30 of the year following the year covered by the form**

Public reporting burden for this collection of information is estimated to average 58 minutes per response, including time to review the instruction, search and gather the data needed, and complete and review the collection of information. Persons are not required to respond to the collection of information unless it displays a currently valid OMB control number. If you have any comments about these estimates or any aspects of this data collection, contact: US Department of Labor, OSHA Office of Statistics, Room N-3644, 200 Constitution Ave, NW, Washington, DC 20210. Do not send the completed forms to this office.

## Establishment information

Your establishment name: Revere Control Systems, Inc.

Street: 2240 Rocky Ridge Road

City: Birmingham State: Alabama Zip: 35216

Industry description (e.g., Manufacture of motor truck trailers)
Electrical Contractors & Other Wiring Installation

Standard Industrial Classification (SIC), if known (e.g., SIC 3715)
1 7 1 1

OR North American Industrial Classification (NAICS), if known (e.g., 336212)
2 3 8 2 1 0

## Employment information

Annual average number of employees: 185

Total hours worked by all employees last year: 366,946

## Sign here

**Knowingly falsifying this document may result in a fine.**

I certify that I have examined this document and that to the best of my knowledge the entries are true, accurate, and complete.

Thomas M. Adams
Company executive

VP of Safety & Quali
Title

205-824-0004
Phone

1/12/2021
Date

# OSHA's Form 300 (Rev. 01/2004)

# Log of Work-Related Injuries and Illnesses

**Attention:** This form contains information relating to employee health and must be used in a manner that protects the confidentiality of employees to the extent possible while the information is being used for occupational safety and health purposes.

Year 2016

**U.S. Department of Labor**
Occupational Safety and Health Administration

Form approved OMB no. 1218-0176

You must record information about every work-related injury or illness that involves loss of consciousness, restricted work activity or job transfer, days away from work, or medical treatment beyond first aid. You must also record significant work-related injuries and illnesses that are diagnosed by a physician or licensed health care professional. You must also record work-related injuries and illnesses that meet any of the specific recording criteria listed in 29 CFR 1904.8 through 1904.12. Feel free to use two lines for a single case if you need to. You must complete an injury and illness incident report (OSHA Form 301) or equivalent form for each injury or illness recorded on this form. If you're not sure whether a case is recordable, call your local OSHA office for help.

Establishment name Durham Electric

City Oakland Park State Florida

| Identify the person | | | | Describe the case | | Classify the case | | | | | | | | | | | |
|---|---|---|---|---|---|---|---|---|---|---|---|---|---|---|---|---|---|
| | | | | | | CHECK ONLY ONE box for each case based on the most serious outcome for that case: | | | | Enter the number of days the injured or ill worker was: | | Check the "injury" column or choose one type of illness: | | | | | |
| (A) Case No. | (B) Employee's Name | (C) Job Title (e.g., Welder) | (D) Date of injury or onset of illness (mo./day) | (E) Where the event occurred (e.g. Loading dock north end) | (F) Describe injury or illness, parts of body affected, and object/substance that directly injured or made person ill (e.g. Second degree burns on right forearm from acetylene torch) | Death | Days away from work | Remained at work | | Away From Work (days) | On job transfer or restriction (days) | (M) Injury | Skin Disorder | Respiratory Condition | Poisoning | Hearing Loss | All other illnesses |
| | | | | | | | | Job transfer or restriction | Other record-able cases | | | | | | | | |
| | | | | | | (G) | (H) | (I) | (J) | (K) | (L) | (1) | (2) | (3) | (4) | (5) | (6) |
| | | | | | | | | | | | | | | | | | |
| | | | | | | | | | | | | | | | | | |
| | | | | | | | | | | | | | | | | | |
| | | | | | | | | | | | | | | | | | |
| | | | | | | | | | | | | | | | | | |
| | | | | | | | | | | | | | | | | | |
| | | | | | | | | | | | | | | | | | |
| | | | | | | | | | | | | | | | | | |
| | | | | | | | | | | | | | | | | | |
| | | | | | | | | | | | | | | | | | |
| | | | | | | | | | | | | | | | | | |
| | | | | | **Page totals** | *0* | *0* | *0* | *0* | *0* | *0* | *0* | *0* | *0* | *0* | *0* | *0* |

Be sure to transfer these totals to the Summary page (Form 300A) before you post it.

Public reporting burden for this collection of information is estimated to average 14 minutes per response, including time to review the instruction, search and gather the data needed, and complete and review the collection of information. Persons are not required to respond to the collection of information unless it displays a currently valid OMB control number. If you have any comments about these estimates or any aspects of this data collection, contact: US Department of Labor, OSHA Office of Statistics, Room N-3644, 200 Constitution Ave, NW, Washington, DC 20210. Do not send the completed forms to this office.



| Injury | Skin Disorder | Respiratory Condition | Poisoning | Hearing Loss | All other illnesses |
|---|---|---|---|---|---|
| (1) | (2) | (3) | (4) | (5) | (6) |

# OSHA's Form 300A (Rev. 01/2004)

# Summary of Work-Related Injuries and Illnesses

Year 2016

**U.S. Department of Labor**
Occupational Safety and Health Administration

Form approved OMB no. 1218-0176

*All establishments covered by Part 1904 must complete this Summary page, even if no injuries or illnesses occurred during the year. Remember to review the Log to verify that the entries are complete*

*Using the Log, count the individual entries you made for each category. Then write the totals below, making sure you've added the entries from every page of the log. If you had no cases write "0."*

*Employees former employees, and their representatives have the right to review the OSHA Form 300 in its entirety. They also have limited access to the OSHA Form 301 or its equivalent. See 29 CFR 1904.35, in OSHA's Recordkeeping rule, for further details on the access provisions for these forms.*

## Number of Cases

| Total number of deaths | Total number of cases with days away from work | Total number of cases with job transfer or restriction | Total number of other recordable cases |
|---|---|---|---|
| 0 | 0 | 0 | 0 |
| (G) | (H) | (I) | (J) |

## Number of Days

| Total number of days away from work | Total number of days of job transfer or restriction |
|---|---|
| 0 | 0 |
| (K) | (L) |

## Injury and Illness Types

| Total number of... | (M) | | (M) |
|---|---|---|---|
| (1) Injury | 0 | (4) Poisoning | 0 |
| (2) Skin Disorder | 0 | (5) Hearing Loss | 0 |
| (3) Respiratory Condition | 0 | (6) All Other Illnesses | 0 |

## Establishment information

Your establishment name Durham Electric

Street 511 NE 42 Street

City Oakland Park State Florida Zip

Industry description (e.g., Manufacture of motor truck trailers)
electrical contracting

Standard Industrial Classification (SIC), if known (e.g., SIC 3715)

OR North American Industrial Classification (NAICS), if known (e.g., 336212)
2 3 8 2 1 0

## Employment information

Annual average number of employees 6

Total hours worked by all employees last year 3000

## Sign here

**Knowingly falsifying this document may result in a fine.**

I certify that I have examined this document and that to the best of my knowledge the entries are true, accurate, and complete.

Company executive

President
Title

954-325-4247
Phone

3-1-17
Date

**Post this Summary page from February 1 to April 30 of the year following the year covered by the form**

Public reporting burden for this collection of information is estimated to average 58 minutes per response, including time to review the instruction, search and gather the data needed, and complete and review the collection of information. Persons are not required to respond to the collection of information unless it displays a currently valid OMB control number. If you have any comments about these estimates or any aspects of this data collection, contact: US Department of Labor, OSHA Office of Statistics, Room N-3644, 200 Constitution Ave. NW, Washington, DC 20210. Do not send the completed forms to this office.

# OSHA's Form 300 (Rev. 01/2004)

# Log of Work-Related Injuries and Illnesses

**Attention:** This form contains information relating to employee health and must be used in a manner that protects the confidentiality of employees to the extent possible while the information is being used for occupational safety and health purposes.

Year 2017

**U.S. Department of Labor**
Occupational Safety and Health Administration

Form approved OMB no. 1218-0176

You must record information about every work-related injury or illness that involves loss of consciousness, restricted work activity or job transfer, days away from work, or medical treatment beyond first aid. You must also record significant work-related injuries and illnesses that are diagnosed by a physician or licensed health care professional. You must also record work-related injuries and illnesses that meet any of the specific recording criteria listed in 29 CFR 1904.8 through 1904.12. Feel free to use two lines for a single case if you need to. You must complete an injury and illness incident report (OSHA Form 301) or equivalent form for each injury or illness recorded on this form. If you're not sure whether a case is recordable, call your local OSHA office for help.

Establishment name Durham Electric

City Oakland Park State Florida

| Identify the person | | | Describe the case | | | Classify the case | | | | | | | | | | | |
|---|---|---|---|---|---|---|---|---|---|---|---|---|---|---|---|---|---|
| | | | | | | CHECK ONLY ONE box for each case based on the most serious outcome for that case: | | | | Enter the number of days the injured or ill worker was: | | Check the "injury" column or choose one type of illness: | | | | | |
| (A) Case No. | (B) Employee's Name | (C) Job Title (e.g., Welder) | (D) Date of injury or onset of illness (mo./day) | (E) Where the event occurred (e.g. Loading dock north end) | (F) Describe injury or illness, parts of body affected, and object/substance that directly injured or made person ill (e.g. Second degree burns on right forearm from acetylene torch) | Death | Days away from work | Remained at work | | Away From Work (days) | On job transfer or restriction (days) | (M) Injury | Skin Disorder | Respiratory Condition | Poisoning | Hearing Loss | All other illnesses |
| | | | | | | | | Job transfer or restriction | Other record-able cases | | | | | | | | |
| | | | | | | (G) | (H) | (I) | (J) | (K) | (L) | (1) | (2) | (3) | (4) | (5) | (6) |
| | | | | | | | | | | | | | | | | | |
| | | | | | | | | | | | | | | | | | |
| | | | | | | | | | | | | | | | | | |
| | | | | | | | | | | | | | | | | | |
| | | | | | | | | | | | | | | | | | |
| | | | | | | | | | | | | | | | | | |
| | | | | | | | | | | | | | | | | | |
| | | | | | | | | | | | | | | | | | |
| | | | | | | | | | | | | | | | | | |
| | | | | | | | | | | | | | | | | | |
| | | | | | | | | | | | | | | | | | |
| | | | | | **Page totals** | *0* | *0* | *0* | *0* | *0* | *0* | *0* | *0* | *0* | *0* | *0* | *0* |

Be sure to transfer these totals to the Summary page (Form 300A) before you post it.

Public reporting burden for this collection of information is estimated to average 14 minutes per response, including time to review the instruction, search and gather the data needed, and complete and review the collection of information. Persons are not required to respond to the collection of information unless it displays a currently valid OMB control number. If you have any comments about these estimates or any aspects of this data collection, contact: US Department of Labor, OSHA Office of Statistics, Room N-3644, 200 Constitution Ave, NW, Washington, DC 20210. Do not send the completed forms to this office.



| Injury | Skin Disorder | Respiratory Condition | Poisoning | Hearing Loss | All other illnesses |
|---|---|---|---|---|---|
| (1) | (2) | (3) | (4) | (5) | (6) |

# OSHA's Form 300A (Rev. 01/2004)

# Summary of Work-Related Injuries and Illnesses

Year 2017

**U.S. Department of Labor**
Occupational Safety and Health Administration

Form approved OMB no. 1218-0176

*All establishments covered by Part 1904 must complete this Summary page, even if no injuries or illnesses occurred during the year. Remember to review the Log to verify that the entries are complete*

*Using the Log, count the individual entries you made for each category. Then write the totals below, making sure you've added the entries from every page of the log. If you had no cases write "0."*

*Employees former employees, and their representatives have the right to review the OSHA Form 300 in its entirety. They also have limited access to the OSHA Form 301 or its equivalent. See 29 CFR 1904.35, in OSHA's Recordkeeping rule, for further details on the access provisions for these forms.*

## Number of Cases

| Total number of deaths | Total number of cases with days away from work | Total number of cases with job transfer or restriction | Total number of other recordable cases |
|---|---|---|---|
| 0 | 0 | 0 | 0 |
| (G) | (H) | (I) | (J) |

## Number of Days

| Total number of days away from work | Total number of days of job transfer or restriction |
|---|---|
| 0 | 0 |
| (K) | (L) |

## Injury and Illness Types

| Total number of... | (M) | | (M) |
|---|---|---|---|
| (1) Injury | 0 | (4) Poisoning | 0 |
| (2) Skin Disorder | 0 | (5) Hearing Loss | 0 |
| (3) Respiratory Condition | 0 | (6) All Other Illnesses | 0 |

**Post this Summary page from February 1 to April 30 of the year following the year covered by the form**

Public reporting burden for this collection of information is estimated to average 58 minutes per response, including time to review the instruction, search and gather the data needed, and complete and review the collection of information. Persons are not required to respond to the collection of information unless it displays a currently valid OMB control number. If you have any comments about these estimates or any aspects of this data collection, contact: US Department of Labor, OSHA Office of Statistics, Room N-3644, 200 Constitution Ave. NW, Washington, DC 20210. Do not send the completed forms to this office.

## Establishment information

Your establishment name: Durham Electric

Street: 511 NE 42 Street

City: Oakland Park State: Florida Zip:

Industry description (e.g., Manufacture of motor truck trailers)
electrical contracting

Standard Industrial Classification (SIC), if known (e.g., SIC 3715)

OR North American Industrial Classification (NAICS), if known (e.g., 336212)
2 3 8 2 1 0

## Employment information

Annual average number of employees: 3

Total hours worked by all employees last year: 1000

## Sign here

**Knowingly falsifying this document may result in a fine.**

I certify that I have examined this document and that to the best of my knowledge the entries are true, accurate, and complete.

Company executive

President
Title

954-325-4247
Phone

3-1-18
Date

# OSHA's Form 300 (Rev. 01/2004)

# Log of Work-Related Injuries and Illnesses

**Attention:** This form contains information relating to employee health and must be used in a manner that protects the confidentiality of employees to the extent possible while the information is being used for occupational safety and health purposes.

Year 2018

**U.S. Department of Labor**
Occupational Safety and Health Administration

You must record information about every work-related injury or illness that involves loss of consciousness, restricted work activity or job transfer, days away from work, or medical treatment beyond first aid. You must also record significant work-related injuries and illnesses that are diagnosed by a physician or licensed health care professional. You must also record work-related injuries and illnesses that meet any of the specific recording criteria listed in 29 CFR 1904.8 through 1904.12. Feel free to use two lines for a single case if you need to. You must complete an injury and illness incident report (OSHA Form 301) or equivalent form for each injury or illness recorded on this form. If you're not sure whether a case is recordable, call your local OSHA office for help.

Form approved OMB no. 1218-0176

Establishment name Durham Electric

City Oakland Park State Florida

| Identify the person | | | | Describe the case | | Classify the case | | | | | | | | | | | |
|---|---|---|---|---|---|---|---|---|---|---|---|---|---|---|---|---|---|
| (A) Case No. | (B) Employee's Name | (C) Job Title (e.g., Welder) | (D) Date of injury or onset of illness (mo./day) | (E) Where the event occurred (e.g. Loading dock north end) | (F) Describe injury or illness, parts of body affected, and object/substance that directly injured or made person ill (e.g. Second degree burns on right forearm from acetylene torch) | **CHECK ONLY ONE** box for each case based on the most serious outcome for that case: | | | | Enter the number of days the injured or ill worker was: | | Check the "injury" column or choose one type of illness: | | | | | |
| | | | | | | Death (G) | Days away from work (H) | Remained at work: Job transfer or restriction (I) | Remained at work: Other record-able cases (J) | Away From Work (days) (K) | On job transfer or restriction (days) (L) | (M) Injury (1) | Skin Disorder (2) | Respiratory Condition (3) | Poisoning (4) | Hearing Loss (5) | All other illnesses (6) |
| | | | | | | | | | | | | | | | | | |
| | | | | | | | | | | | | | | | | | |
| | | | | | | | | | | | | | | | | | |
| | | | | | | | | | | | | | | | | | |
| | | | | | | | | | | | | | | | | | |
| | | | | | | | | | | | | | | | | | |
| | | | | | | | | | | | | | | | | | |
| | | | | | | | | | | | | | | | | | |
| | | | | | | | | | | | | | | | | | |
| | | | | | | | | | | | | | | | | | |
| | | | | | | | | | | | | | | | | | |
| | | | | | **Page totals** | *0* | *0* | *0* | *0* | *0* | *0* | *0* | *0* | *0* | *0* | *0* | *0* |

Be sure to transfer these totals to the Summary page (Form 300A) before you post it.

Public reporting burden for this collection of information is estimated to average 14 minutes per response, including time to review the instruction, search and gather the data needed, and complete and review the collection of information. Persons are not required to respond to the collection of information unless it displays a currently valid OMB control number. If you have any comments about these estimates or any aspects of this data collection, contact: US Department of Labor, OSHA Office of Statistics, Room N-3644, 200 Constitution Ave, NW, Washington, DC 20210. Do not send the completed forms to this office.



| Injury | Skin Disorder | Respiratory Condition | Poisoning | Hearing Loss | All other illnesses |
|---|---|---|---|---|---|
| (1) | (2) | (3) | (4) | (5) | (6) |

# OSHA's Form 300A (Rev. 01/2004)

# Summary of Work-Related Injuries and Illnesses

Year 2018

**U.S. Department of Labor**
Occupational Safety and Health Administration

Form approved OMB no. 1218-0176

*All establishments covered by Part 1904 must complete this Summary page, even if no injuries or illnesses occurred during the year. Remember to review the Log to verify that the entries are complete*

*Using the Log, count the individual entries you made for each category. Then write the totals below, making sure you've added the entries from every page of the log. If you had no cases write "0."*

*Employees former employees, and their representatives have the right to review the OSHA Form 300 in its entirety. They also have limited access to the OSHA Form 301 or its equivalent. See 29 CFR 1904.35, in OSHA's Recordkeeping rule, for further details on the access provisions for these forms.*

## Number of Cases

| Total number of deaths | Total number of cases with days away from work | Total number of cases with job transfer or restriction | Total number of other recordable cases |
|---|---|---|---|
| 0 | 0 | 0 | 0 |
| (G) | (H) | (I) | (J) |

## Number of Days

| Total number of days away from work | Total number of days of job transfer or restriction |
|---|---|
| 0 | 0 |
| (K) | (L) |

## Injury and Illness Types

| Total number of... (M) | | | |
|---|---|---|---|
| (1) Injury | 0 | (4) Poisoning | 0 |
| (2) Skin Disorder | 0 | (5) Hearing Loss | 0 |
| (3) Respiratory Condition | 0 | (6) All Other Illnesses | 0 |

**Post this Summary page from February 1 to April 30 of the year following the year covered by the form**

Public reporting burden for this collection of information is estimated to average 58 minutes per response, including time to review the instruction, search and gather the data needed, and complete and review the collection of information. Persons are not required to respond to the collection of information unless it displays a currently valid OMB control number. If you have any comments about these estimates or any aspects of this data collection, contact: US Department of Labor, OSHA Office of Statistics, Room N-3644, 200 Constitution Ave, NW, Washington, DC 20210. Do not send the completed forms to this office.

## Establishment information

Your establishment name: Durham Electric

Street: 511 NE 42 Street

City: Oakland Park State: Florida Zip:

Industry description (e.g., Manufacture of motor truck trailers)
electrical contracting

Standard Industrial Classification (SIC), if known (e.g., SIC 3715)

OR North American Industrial Classification (NAICS), if known (e.g., 336212)
2 3 8 2 1 0

## Employment information

Annual average number of employees: 2

Total hours worked by all employees last year: 366

## Sign here

**Knowingly falsifying this document may result in a fine.**

I certify that I have examined this document and that to the best of my knowledge the entries are true, accurate, and complete.

Company executive

PRES
Title

954-325-4247
Phone

3/1/2019
Date

# OSHA's Form 300 (Rev. 01/2004)

# Log of Work-Related Injuries and Illnesses

**Attention:** This form contains information relating to employee health and must be used in a manner that protects the confidentiality of employees to the extent possible while the information is being used for occupational safety and health purposes.

Year 2019

**U.S. Department of Labor**
Occupational Safety and Health Administration

Form approved OMB no. 1218-0176

You must record information about every work-related injury or illness that involves loss of consciousness, restricted work activity or job transfer, days away from work, or medical treatment beyond first aid. You must also record significant work-related injuries and illnesses that are diagnosed by a physician or licensed health care professional. You must also record work-related injuries and illnesses that meet any of the specific recording criteria listed in 29 CFR 1904.8 through 1904.12. Feel free to use two lines for a single case if you need to. You must complete an injury and illness incident report (OSHA Form 301) or equivalent form for each injury or illness recorded on this form. If you're not sure whether a case is recordable, call your local OSHA office for help.

Establishment name Durham Electric

City Oakland Park State Florida

| Identify the person | | | | Describe the case | | Classify the case | | | | | | | | | | | |
|---|---|---|---|---|---|---|---|---|---|---|---|---|---|---|---|---|---|
| | | | | | | CHECK ONLY ONE box for each case based on the most serious outcome for that case: | | | | Enter the number of days the injured or ill worker was: | | Check the "injury" column or choose one type of illness: | | | | | |
| (A) Case No. | (B) Employee's Name | (C) Job Title (e.g., Welder) | (D) Date of injury or onset of illness (mo./day) | (E) Where the event occurred (e.g. Loading dock north end) | (F) Describe injury or illness, parts of body affected, and object/substance that directly injured or made person ill (e.g. Second degree burns on right forearm from acetylene torch) | Death | Days away from work | Remained at work | | Away From Work (days) | On job transfer or restriction (days) | (M) Injury | Skin Disorder | Respiratory Condition | Poisoning | Hearing Loss | All other illnesses |
| | | | | | | | | Job transfer or restriction | Other record-able cases | | | | | | | | |
| | | | | | | (G) | (H) | (I) | (J) | (K) | (L) | (1) | (2) | (3) | (4) | (5) | (6) |
| | | | | | | | | | | | | | | | | | |
| | | | | | | | | | | | | | | | | | |
| | | | | | | | | | | | | | | | | | |
| | | | | | | | | | | | | | | | | | |
| | | | | | | | | | | | | | | | | | |
| | | | | | | | | | | | | | | | | | |
| | | | | | | | | | | | | | | | | | |
| | | | | | | | | | | | | | | | | | |
| | | | | | | | | | | | | | | | | | |
| | | | | | | | | | | | | | | | | | |
| | | | | | | | | | | | | | | | | | |
| | | | | | **Page totals** | *0* | *0* | *0* | *0* | *0* | *0* | *0* | *0* | *0* | *0* | *0* | *0* |

Be sure to transfer these totals to the Summary page (Form 300A) before you post it.

Public reporting burden for this collection of information is estimated to average 14 minutes per response, including time to review the instruction, search and gather the data needed, and complete and review the collection of information. Persons are not required to respond to the collection of information unless it displays a currently valid OMB control number. If you have any comments about these estimates or any aspects of this data collection, contact: US Department of Labor, OSHA Office of Statistics, Room N-3644, 200 Constitution Ave, NW, Washington, DC 20210. Do not send the completed forms to this office.



| Injury | Skin Disorder | Respiratory Condition | Poisoning | Hearing Loss | All other illnesses |
|---|---|---|---|---|---|
| (1) | (2) | (3) | (4) | (5) | (6) |

# OSHA's Form 300A (Rev. 01/2004)

# Summary of Work-Related Injuries and Illnesses

Year 2019

**U.S. Department of Labor**
Occupational Safety and Health Administration

Form approved OMB no. 1218-0176

*All establishments covered by Part 1904 must complete this Summary page, even if no injuries or illnesses occurred during the year. Remember to review the Log to verify that the entries are complete*

*Using the Log, count the individual entries you made for each category. Then write the totals below, making sure you've added the entries from every page of the log. If you had no cases write "0."*

*Employees former employees, and their representatives have the right to review the OSHA Form 300 in its entirety. They also have limited access to the OSHA Form 301 or its equivalent. See 29 CFR 1904.35, in OSHA's Recordkeeping rule, for further details on the access provisions for these forms.*

## Number of Cases

| Total number of deaths | Total number of cases with days away from work | Total number of cases with job transfer or restriction | Total number of other recordable cases |
|---|---|---|---|
| 0 | 0 | 0 | 0 |
| (G) | (H) | (I) | (J) |

## Number of Days

| Total number of days away from work | Total number of days of job transfer or restriction |
|---|---|
| 0 | 0 |
| (K) | (L) |

## Injury and Illness Types

| Total number of... (M) | | | |
|---|---|---|---|
| (1) Injury | 0 | (4) Poisoning | 0 |
| (2) Skin Disorder | 0 | (5) Hearing Loss | 0 |
| (3) Respiratory Condition | 0 | (6) All Other Illnesses | 0 |

**Post this Summary page from February 1 to April 30 of the year following the year covered by the form**

Public reporting burden for this collection of information is estimated to average 58 minutes per response, including time to review the instruction, search and gather the data needed, and complete and review the collection of information. Persons are not required to respond to the collection of information unless it displays a currently valid OMB control number. If you have any comments about these estimates or any aspects of this data collection, contact: US Department of Labor, OSHA Office of Statistics, Room N-3644, 200 Constitution Ave, NW, Washington, DC 20210. Do not send the completed forms to this office.

## Establishment information

Your establishment name: Durham Electric

Street: 511 NE 42 Street

City: Oakland Park State: Florida Zip:

Industry description (e.g., Manufacture of motor truck trailers)
electrical contracting

Standard Industrial Classification (SIC), if known (e.g., SIC 3715)

OR North American Industrial Classification (NAICS), if known (e.g., 336212)
2 3 8 2 1 0

## Employment information

Annual average number of employees: 8

Total hours worked by all employees last year: 6817

## Sign here

**Knowingly falsifying this document may result in a fine.**

I certify that I have examined this document and that to the best of my knowledge the entries are true, accurate, and complete.

Company executive

President
Title

954-325-4247
Phone

3-1-20
Date

# OSHA's Form 300 (Rev. 01/2004)

# Log of Work-Related Injuries and Illnesses

**Attention:** This form contains information relating to employee health and must be used in a manner that protects the confidentiality of employees to the extent possible while the information is being used for occupational safety and health purposes.

Year 2020

**U.S. Department of Labor**
Occupational Safety and Health Administration

Form approved OMB no. 1218-0176

You must record information about every work-related injury or illness that involves loss of consciousness, restricted work activity or job transfer, days away from work, or medical treatment beyond first aid. You must also record significant work-related injuries and illnesses that are diagnosed by a physician or licensed health care professional. You must also record work-related injuries and illnesses that meet any of the specific recording criteria listed in 29 CFR 1904.8 through 1904.12. Feel free to use two lines for a single case if you need to. You must complete an injury and illness incident report (OSHA Form 301) or equivalent form for each injury or illness recorded on this form. If you're not sure whether a case is recordable, call your local OSHA office for help.

Establishment name Durham Electric

City Oakland Park State Florida

| Identify the person | | | Describe the case | | Classify the case | | | | | | | | | | | |
|---|---|---|---|---|---|---|---|---|---|---|---|---|---|---|---|---|
| | | | | | **CHECK ONLY ONE** box for each case based on the most serious outcome for that case: | | | | Enter the number of days the injured or ill worker was: | | Check the "injury" column or choose one type of illness: | | | | | |
| (A) Case No. | (B) Employee's Name | (C) Job Title (e.g., Welder) | (D) Date of injury or onset of illness (mo./day) | (E) Where the event occurred (e.g. Loading dock north end) | (F) Describe injury or illness, parts of body affected, and object/substance that directly injured or made person ill (e.g. Second degree burns on right forearm from acetylene torch) | Death (G) | Days away from work (H) | Remained at work: Job transfer or restriction (I) | Remained at work: Other record-able cases (J) | Away From Work (days) (K) | On job transfer or restriction (days) (L) | (M) Injury (1) | Skin Disorder (2) | Respiratory Condition (3) | Poisoning (4) | Hearing Loss (5) | All other illnesses (6) |
| | | | | | | | | | | | | | | | | | |
| | | | | | | | | | | | | | | | | | |
| | | | | | | | | | | | | | | | | | |
| | | | | | | | | | | | | | | | | | |
| | | | | | | | | | | | | | | | | | |
| | | | | | | | | | | | | | | | | | |
| | | | | | | | | | | | | | | | | | |
| | | | | | | | | | | | | | | | | | |
| | | | | | | | | | | | | | | | | | |
| | | | | | | | | | | | | | | | | | |
| | | | | | | | | | | | | | | | | | |
| | | | | | **Page totals** | *0* | *0* | *0* | *0* | *0* | *0* | *0* | *0* | *0* | *0* | *0* | *0* |

Be sure to transfer these totals to the Summary page (Form 300A) before you post it.

Public reporting burden for this collection of information is estimated to average 14 minutes per response, including time to review the instruction, search and gather the data needed, and complete and review the collection of information. Persons are not required to respond to the collection of information unless it displays a currently valid OMB control number. If you have any comments about these estimates or any aspects of this data collection, contact: US Department of Labor, OSHA Office of Statistics, Room N-3644, 200 Constitution Ave, NW, Washington, DC 20210. Do not send the completed forms to this office.



Injury (1) Skin Disorder (2) Respiratory Condition (3) Poisoning (4) Hearing Loss (5) All other illnesses (6)

# OSHA's Form 300A (Rev. 01/2004)

# Summary of Work-Related Injuries and Illnesses

Year 2020

**U.S. Department of Labor**
Occupational Safety and Health Administration

Form approved OMB no. 1218-0176

*All establishments covered by Part 1904 must complete this Summary page, even if no injuries or illnesses occurred during the year. Remember to review the Log to verify that the entries are complete*

*Using the Log, count the individual entries you made for each category. Then write the totals below, making sure you've added the entries from every page of the log. If you had no cases write "0."*

*Employees former employees, and their representatives have the right to review the OSHA Form 300 in its entirety. They also have limited access to the OSHA Form 301 or its equivalent. See 29 CFR 1904.35, in OSHA's Recordkeeping rule, for further details on the access provisions for these forms.*

## Number of Cases

| Total number of deaths | Total number of cases with days away from work | Total number of cases with job transfer or restriction | Total number of other recordable cases |
|---|---|---|---|
| 0 | 0 | 0 | 0 |
| (G) | (H) | (I) | (J) |

## Number of Days

| Total number of days away from work | Total number of days of job transfer or restriction |
|---|---|
| 0 | 0 |
| (K) | (L) |

## Injury and Illness Types

| Total number of... | (M) | | |
|---|---|---|---|
| (1) Injury | 0 | (4) Poisoning | 0 |
| (2) Skin Disorder | 0 | (5) Hearing Loss | 0 |
| (3) Respiratory Condition | 0 | (6) All Other Illnesses | 0 |

**Post this Summary page from February 1 to April 30 of the year following the year covered by the form**

Public reporting burden for this collection of information is estimated to average 58 minutes per response, including time to review the instruction, search and gather the data needed, and complete and review the collection of information. Persons are not required to respond to the collection of information unless it displays a currently valid OMB control number. If you have any comments about these estimates or any aspects of this data collection, contact: US Department of Labor, OSHA Office of Statistics, Room N-3644, 200 Constitution Ave, NW, Washington, DC 20210. Do not send the completed forms to this office.

## Establishment information

Your establishment name: Durham Electric

Street: 511 NE 42 Street

City: Oakland Park State: Florida Zip:

Industry description (e.g., Manufacture of motor truck trailers)
electrical contracting

Standard Industrial Classification (SIC), if known (e.g., SIC 3715)

OR North American Industrial Classification (NAICS), if known (e.g., 336212)
2 3 8 2 1 0

## Employment information

Annual average number of employees: 9

Total hours worked by all employees last year: 6180

## Sign here

**Knowingly falsifying this document may result in a fine.**

I certify that I have examined this document and that to the best of my knowledge the entries are true, accurate, and complete.

Ken Geist
Company executive

President
Title

954-275-8670
Phone

3-1-21
Date

# Revere Control Systems, Inc. – Company Profile

Established in 1980 in Birmingham, Alabama, Revere Control Systems employs approximately one hundred eighty (180) people with one goal in mind: to be recognized as the preferred automation, communication, and information integrator in the field of Water and Wastewater.

We are experts in Industrial Automation. Our advice, automation engineering, and construction skills are all in-house and bundled together for one purpose: to perform better and faster for our customers with less coordination issues and less risk than any other method or choice.

## *Facilities*



*The Revere Control Systems Birmingham complex contains 64,000 square feet of production and administrative office space.*

| | |
|---|---|
| Main Office: | 2240 Rocky Ridge Rd., Birmingham, AL 35216<br>205.824.0004 |
| North Carolina Office: | 2331-L Crown Point Executive Drive, Charlotte, NC 28227<br>704.851.4816 |
| Florida Office: | 3810 Drane Field Rd., Ste. 7, Lakeland, FL, 33811<br>863.226.0219 |
| Texas Office: | 2620 Summerhill Road, Texarkana, TX 75503<br>903.716.7070 |

## *Project Bonding*

Revere can provide **performance or supply bonding**. Our bonding capacity is $35M. Our bonding company is Hanover Insurance Company; our agent is Joey Bole with Cobbs, Allen & Hall of Birmingham, Alabama (205) 414-8100.

## *Insurance*

Revere carries the following basic insurance coverage:

| | |
|---|---|
| Workmen's Compensation | $ 1,000,000 |
| Automobile Liability | $ 1,000,000 |
| General Liability | $ 5,000,000 |
| Umbrella Liability | $10,000,000 |
| Cyber Liability | $ 5,000,000 |
| Pollution Liability | $ 2,000,000 |
| Errors & Omissions | $ 5,000,000 |

## *Contractor and Business Licenses*

| | |
|---|---|
| Alabama General Contractor License | No. 21662 |
| Alabama Electrical Contractor License | No. 05883 |
| Tennessee Contractor License | No. 40950 |
| Florida General Contractor License | No. CG1526173 |
| Florida Electrical Contractor License | No. EC13008291 |
| Georgia Electrical Contractor License | No. EN217283 |
| Louisiana Electrical Contractor License | No. 39583 |
| Mississippi Electrical Contractor License | No. 17818-MC |
| North Carolina Electrical Contractor License | No. U.32661 |
| Oklahoma Electrical Contractor License | No. 00171417 |
| South Carolina Mechanical Contractor License | No. M112558 |
| Texas Electrical Contractor License | No. 31584 |

Revere Control Systems is **authorized to perform engineering** in the following states:

- Alabama Certificate of Authorization Number CA-01318-E
- Florida Certificate of Authorization Number 8769
- Georgia Engineer Firm License Number PEF006354
- Oklahoma Certificate of Authorization Number 7594
- South Carolina Certificate of Authorization Number 3899
- Tennessee Letter of Authorization, File Number 3841
- Texas Certificate of Authorization Number 16762

## *Engineering Qualifications*

Revere has the following qualified staff:

- Fifty Plus (50+) Degreed Engineers, including Professional Engineers with registrations in Alabama, Arizona, Arkansas, California, Colorado, Florida, Georgia, Illinois, Louisiana, Massachusetts, Mississippi, Nevada, New Mexico, North Carolina, Ohio, Oklahoma, South Carolina, Tennessee, Texas, Utah, Virginia, West Virginia, and Wyoming
- Seven (7) Certified Project Management Professionals (PMP)

## *Senior Managers*

- Bob Adams, President
- Tom York, PE, Chief Operating Officer
- Jason English, Chief Financial Officer
- Tom Adams, Vice President of Safety, Quality and Compliance
- Rick Braddock, Vice President of Logistics and Facilities
- Nan Johnson, PMP, Vice President of Municipal Systems
- Jason Leeper, PE, Vice President of Industrial Systems
- David Williams, PE, Vice President of OEM Systems
- Greg Graves, Vice President of Sales & Marketing
- Marc Handley, Vice President of Strategy Process Continuous Improvement
- Lisa Milano, Vice President of Human Resources
- Andy Wilson, Vice President of Construction Services
- Rob Shanks, Director of Pump Automation Control Systems
- Jeff Byers, Director of Information Technology

## *Core Competencies and Technical Experience*

The following represents our core competencies and areas of technical experience and knowledge.

- Water and Wastewater Treatment Facility Controls
- Design and Development of In-Plant Central Supervisory Control and Data Acquisition (SCADA)
- Assessment of Existing Plant Control Systems
- Project Management
- Engineering and CAD for Detailed Control Panel Design – PLC Control Panels, Local Control Panels, RTU Panels, Remote I/O Panels
- Control Panel Assembly, Staging and Testing
- PLC Programming for Process or Functional Control Strategies
- Configuration of Control System Servers (Standalone and Virtual Machines)
- Configuration of Operator Workstations and Thin Client View Nodes
- Human Machine Interface (HMI) Applications for Graphic Representation of Plant Processes, Historical Data Collection and Trending
- Generation of Daily and Monthly Operations and Maintenance Reports
- Design, Testing and Termination of Plant Control System Network Infrastructure – Fiber Optics, CAT6
- Remote Telemetry and Communication Systems – Licensed and Unlicensed Radio, Cellular Platforms
- Radio Path Surveys and Testing – Software and Field Testing
- Installation, Troubleshooting, Maintaining Radio Antennas and Towers
- Calibration, Commissioning of Field Instrumentation – Analytical, Flow, Level, Pressure,
- Retrofit, Upgrade and Modification of Existing Control Panels
- Control System Training for Plant Operations and Maintenance Personnel
- Support Services – Remote Monitoring, Troubleshooting, Preventive and Emergency
- Control Systems for Original Equipment Manufacturers (OEM)
    - Centrifugal Blower Controls
    - Sand Filter Controls
    - Aerators
    - Clarifiers
    - Bar Screens
    - Belt Presses
    - Filter Presses
    - Centrifuges
    - Package Treatment Plant Controls
    - Sequencing Batch Reactor (SBR) Controls
    - Aeration Dissolved Oxygen Basin Controls
    - Reverse Osmosis Controls
    - Power Monitoring and Peak Load Shedding Controls
- Variable Frequency Drives (VFDs)
- Motor Control Centers (MCCs) – Standard, Custom Design/Modifications

## *Industry / Manufacturer Partnerships and Certifications*

Revere has established and maintains partnerships and certifications with the following industry leaders and equipment manufacturers. Certificates reflecting these partnerships are included for reference purposes.

- Control System Integrators Association (CSIA) – Certified Member
- Design-Build Institute of America (DBIA) Associate
- Rockwell Automation PartnerNetwork Solutions Provider
- Schneider Electric Alliance Integration Partnership
- United Laboratories Control Panel Certifications – UL 508A and UL 698
- Wonderware Certified System Integrator Partner
- GE Intelligent Platform Solution Provider
- Inductive Automation Gold Certified Integrator
- Mission Critical Internet of Things (MC-IoT) Value Added Reseller (VAR)
- Trihedral VTScada Certified Solution Partner

# CITY OF HALLANDALE BEACH
# Reverse Osmosis WTP HMI Upgrade
# 630 N.W. 2nd Street
# Hallandale Beach, FL 33009

**Owner Representative(s):**

John Fawcett, Water Plant Manager
Phone: (954) 457-1610
E-Mail: jfawcett@cohb.org

Year of Project Completion: 2019

**Description of Services Provided**

Revere provided two (2) Dell PowerEdge Servers with a Server Rack for the SCADA HMI Application. A new HMI Application was developed using the Trihedral VTScada HMI Software. The application was based on the configuration and functionality of the existing GE Proficy iFix HMI Application.

PLCs throughout the Water Treatment Plant utilized the Allen Bradley ControlLogix PLC hardware platform. The Water Distribution System included a Data Flow System which was interfaced with the new Trihedral VTScada HMI Application. The Trihedral VTScada I/O driver for the Data Flow System was used to establish communication including a redundant configuration for the HMI Servers.

An Allen Bradley Remote I/O Panel was provided by Revere to allow for the interfacing of additional I/O signals for the Fluoride Chemical Feed System, Sodium Hypochlorite Chemical Feed System and the Filter Effluent Turbidity Analyzers.

Revere provided installation services for the SCADA Server Rack including electrical conduit/wire and Ethernet communication cabling.

REVERE

# CUSTOMER REFERENCE

## CITY OF FRANKLIN, TENNESSEE
## Water Distribution and Collection System SCADA Improvements
## 109 Third Avenue South
## Franklin, TN 37064

**Owner Representative**

Michelle Hatcher, Assistant Director
Phone: (615) 794-4554
E-Mail: michelle.hatcher@franklintn.gov

**Consulting Engineer Representative (CDM Smith)**

Robert Huguenard, PE, BCEE
Phone: (404) 720-1335
E-Mail: HuguenardRP@cdsmith.com

Scott Whitmore, Automation Engineer
Phone:
E-Mail: WhitemoreWS@cdmsmith.com

Year of Project Completion: October 2018
Contract Amount: $1,833,151.02

**Description of Services Provided**

Revere served as the prime contractor for the Franklin, Tennessee Water Distribution and Collection System SCADA Improvements Project which included the replacement of the SCADA System using dual redundant communications via licensed radios as the primary mode of communications and cellular modems as the secondary mode of communications. The following represents a detailed description of the contracted scope of work for the project.

- Furnish and install a PC-based SCADA workstation and development laptop, network router and alarm printer at the Public Works Facility.

- Furnish and install a Master remote telemetry unit (RTU) at the Public Works Facility including a new antenna, antenna tower and cabling to establish communications with the SCADA networking equipment.

- Furnish and install a programmable logic controller (PLC) based RTU at each of the remote system sites. Most of the sites require the removal and replacement of an existing RTU. Where possible, the new RTU panel was installed in the same location as the existing RTU and the existing antennas and signal/power wiring was reused. For the sites where this was not possible, the new RTU was installed in an alternate location and the old RTU panels were reconfigured as termination cabinets with new the installation of new antenna cabling and the extension of signal/power wiring.

- Establish dual redundant communication between the Master RTU and the remote sites using a licensed radio communication system as the primary mode for communications. Where required, new antenna poles and towers were installed. Cellular communications was also established as the secondary or backup mode for communications.

- Application engineering services included the following:
  - Programming of the RTU PLCs (Allen Bradley CompactLogix)
  - Configuration of the SCADA network equipment (Cisco, GE MDS, Cradlepoint)
  - Programming, configuration and design of the SCADA HMI software (Trihedral VTScada)
  - Testing, startup and training for the complete SCADA Control System Upgrade

# CUSTOMER REFERENCE

## ST BERNARD PARISH, LOUISIANA
## SCADA / CAMO Panel Project
## 1125 E. St Bernard Highway
## Chalmette, LA 70043

**Owner Representative – St Bernard Parish**

David Peralta, President
Phone: (919) 560-9038
E-Mail: rstewart@dconc.gov

**Consulting Engineer Representative – CDM Smith:**

Chris Munson, PE; Project Engineer
Phone: (504) 799-1128
E-Mail: munsoncm@cdmsmith.com

Year of Project Completion: Scheduled 2016
Contract Amount: $4,968,420.00
5Percent Performed by Revere: 50%

**Description of Services Provided**

Revere has been awarded the contract for the SCADA / CAMO Panel Project in St Bernard Parish Louisiana. We are currently in the early days of a one (1) year contract with completion scheduled for April 2016. Revere is serving as the Prime Contractor for this project. The following tasks are included in the scope of work for this project.

- Establish a cellular SCADA telemetry system allowing for the network of more than one hundred remote lift stations, drainage pump stations and water towers into a single network. The communication protocol will be DNP3 and allow for store and forward capability to the SCADA System located at the Water Treatment Plant and the Munster Wastewater Treatment Plant.
- CAMO Panels will be provided at four (4) lift stations, eleven (11) drainage pump stations and four (4) water tower sites. New Non-CAMO Panels will be provided at seven (7) drainage pump stations and powered by solar energy.
- New field instrumentation and field wiring will be provided at several remote sites.
- Multi-Smart Controller Configuration and HMI Configuration using Trihedral VTScada Software.
- Electrical installation, checkout and commissioning.
- Submittals and Factory Testing.

# CUSTOMER REFERENCE

## GAINESVILLE REGIONAL UTILITIES
## Murphree Water Treatment Plant – SCADA Upgrade
## 1600 NE 53rd Avenue
## Gainesville, FL 32609

**Owner Representative(s):**


Rachel Haeseler, PE; Utility Engineer
Phone: (352) 393-1618
E-Mail: haeselerra@gru.com

Debbie Daugherty, PE; Engineer
Phone: (352) 393-1622
E-Mail: daughertydd@gru.com


Year of Project Completion: December 2015
Contract Amount: $ 851,145.00
Percent Performed by Revere: 80%

**Description of Services Provided**

Revere is serving as the Prime Contractor for the SCADA Upgrade Project with a direct contract from Gainesville Regional Utilities. The project consists of the following major tasks:

- Upgrade the existing Allen Bradley PLC-5 Hardware with Allen Bradley ControlLogix Hardware.
- Provide a backup control system for critical control loops using Allen Bradley PICO Controllers.
- Upgrade the existing Plant Control System server and computer workstations.
- Upgrade the existing Plant Control System HMI Software from Intellution Fix 32 to GE Proficy iFix Version 5.8

The Plant Control System network architecture is to be converted from a DH+ Network to an Ethernet based protocol.

A Witnessed Factory Acceptance Test was held with participation from the Owner and Consulting Engineer prior to beginning the onsite installation and commissioning services. The schedule included a forty-eight (48) hour shutdown of the plant for the removal of the existing Allen Bradley PLC-5 hardware and installation of the Allen Bradley ControlLogix PLC Hardware. The plant operated in a manual mode with consistent monitoring by the Operations Staff. Systems were brought online with the Plant Control System as I/O was verified from the field to the upgraded GE Proficy iFix HMI Application.

Fifteen (15) existing Moore Controllers were replaced with Allen Bradley PICO Controllers for critical plant control loops including the Filter Flume Level, High Service Pumps, Reactor-Clarifier Basin Flow, Lime System Flows, CO2 Injection System and Chlorinator Controls.

The existing computer servers and workstations were upgraded with rack-mounted servers including two (2) SCADA Servers, one (1) Thin Client Server and one (1) Historian Server. Four (4) SCADA HMI Control Node Workstations are provided for use as a Development System and a Spare System. Seven (7) HMI View Node Workstations are provided for various locations throughout the plant.

The existing Intellution FIX32 software was upgraded with the GE Proficy iFIx Version 5.8 Software. Graphic development, database configuration, historical trending and reports were provided as part of the upgrade.

The project schedule duration is nine (9) months from the Notice to Proceed through Final Completion. A two (2) year maintenance support contract is included as part of the contracted services which begins upon achieving Substantial Completion.

REVERE

# CUSTOMER REFERENCE

## HIALEAH REVERSE OSMOSIS WATER TREATMENT FACILITY
## Hialeah Water LLP
## 16500 NW 97th Avenue
## Hialeah, Florida 33018

**Owner Representative(s):**


Rich Ulkus; Engineer
E-Mail: rich.ulkus@aecom.com

Ramon Diaz; Construction Mgmt
E-Mail: ramon.diaz@inima.com


Year of Project Completion: Scheduled for June 2015

Contract Amount: $1,399,837.13

PLC Platform: Allen Bradley ControlLogix, MicroLogix
HMI Software: Rockwell FactoryTalk View SE, Historian

**Description of Services Provided**

Revere provided the System Integration scope of work for the Hialeah RO Water Treatment Facility including field instrumentation PLC and local control panels along with the network and computer hardware and software for the Plant Control System.

The following major equipment items were provided as part of our scope of supply.

- Float Switches
- Pressure Switches / Gauges / Diaphragm Seals
- Pressure Transmitters (Gauge and Differential)
- Electro-Magnetic Flowmeters
- Analytical Instruments (pH, Chlorine, Ammonia, Fluoride, Turbidity, Conductivity)
- Ultrasonic Level Transmitters/Transducers
- Fiber Optic Cable
- Computer Servers and Workstations
- Network/Server Racks
- HMI Software – Rockwell Software FactoryTalk Site Edition
- Wireless Access Points
- One (1) Main Control Panel using the AB ControlLogix PLC Hardware
- Six (6) Remote I/O Panels for installation throughout the plant using the AB Flex I/O
- Six (6) Remote Well RTU Panels using AB MicroLogix PLC Hardware
- One (1) Chemical Truck Unloading Panel
- Master Radio Control Panel

Coordination with various process equipment manufacturers and suppliers was required in order to implement the project and design the process control system. Revere was responsible for developing the HMI Application using the Rockwell Software FactoryTalk Site Edition software. The Control System utilized extensive network switches as manufactured by Allen Bradley. The network infrastructure was based on a fiber optic cabling system that Revere terminated and tested.

A Factory Acceptance Test was conducted at Revere's facility where the system was demonstrated for the Consulting Engineer(s) and Construction Management Team. Revere has provided onsite support to the Construction Management Team for the entire plant control system as they have worked to complete the construction of the plant and placing the plant into full operation.

REVERE

# CUSTOMER REFERENCE

## TOWN OF CARY, NORTH CAROLINA
## Cary/Apex WTF Control System Upgrade
## 1400 Wimberly Road
## Apex, NC 27523

**Owner Representative(s):**


Alexandra Jones; Water System Manager
Phone: (919) 362-5504
E-Mail: alexandra.jones@townofcary.org

Joel (J.D.) Arnold; Operations Team Leader
Phone: (919) 362-5502
E-Mail: joel.arnold@townofcary.org


Year of Project Completion: 2015
Contract Amount: $3,023,276.95

**Description of Services To Be Provided**

Revere provided PLC Control Panels, PLC/HMI Programming, Factory/Field Testing, Electrical Installation Services, Panel Modifications, Startup and Commissioning Services, Owner Training for the Cary/Apex WTF Control System Upgrade Project.

New PLC Control Panels were provided for the following areas using the Allen Bradley ControlLogix and CompactLogix PLC Platform:

- Main Ozone Control Panel (PLC 3-1)
- Five (5) Filter PLC Panels (PLC 2-1 thru PLC 2-5)

The existing Allen Bradley PLC-5 hardware were replaced with Allen Bradley ControlLogix hardware for the following control panels.

- Administration Building PLC Panel (PLC 1-1)
- Hypochlorite Building PLC Panel (PLC 1-2)
- Chemical Building PLC Panel (PLC 1-3)
- Sludge Building PLC Panel (PLC 1-4)
- Ozone Generator PLC Panels (PLC 3-2 and 3-4)
- Ozone Destruct PLC Panels (PLC 3-6 and 3-7)
- Centrifuge PLC Panel (PLC-4A)
- Finished Water Building PLC Panel (PLC-5)
- Electrical Building PLC Panel (PLC-6)
- SuperPulsator PLC Panel (PLC-7)
- Raw Water Pump Station PLC Panel (PLC-8)

The SCADA Network consists of two (2) separate aspects including a PLC segment and a HMI segment. The network design and implementation allows for limiting communication traffic on the PLC network while at the same provided a level of security to protect the plant process from the outside world or everyday computer activities. Revere was responsible for installing, terminating and testing the fiber optic cable and CAT6 cable for the entire network system. Revere was responsible for the software development including the PLC Programming using Rockwell Software RSLogix5000 and converting the GE iFix HMI Application to a Wonderware ArchestrA System Platform Application.

Two (2) Factory Acceptance Tests were performed – one (1) for the Ozone Control System including the Control Panels and local Operator Interface Terminals and one (1) for the Main Plant Control System including the Control Panels, PLC Hardware Upgrades and HMI Application.

Installation of the control system was performed one process area at a time beginning with the Ozone System. Revere worked closely with the Plant Operations Staff during the installation, startup and commissioning phase to insure proper plant operations, minimal down time of key process equipment and thorough testing of the system.

REVERE

# CUSTOMER REFERENCE

## CITY OF BOCA RATON
## Utility Services Department
## 1401 Glades Road
## Boca Raton, FL 33431-6417

**Owner Representative(s):**

Mike Tufts; SCADA Manager
Phone: (561) 876-3342
E-Mail: MTufts@ci.boca-raton.fl.us

**Consulting Engineer Representative(s):**

John Chandler; Construction Manager
Phone: (954) 776 1731
E-Mail: chandlerjs@cdmsmith.com

Dave Ubert; Automation Group Leader
Phone: (407) 660-6388
E-Mail: ubertdl@cdmsmith.com

Project Budget: $1,904,000
Final Costs: $1,895,186.94
Original Schedule: Start Date - November 1, 2012; Completion Date - March 9, 2014
Actual Schedule: Start Date - November 1, 2012; Completion Date - December 17, 2014
Percent Performed by Revere: 90%

**Description of Services Provided**

Revere served as the Prime Contractor for the Boca Raton FL Water Treatment Plant SCADA Upgrade Project to perform the following scope of work.

- Replace all of the Bristol Babcock PLCs with Allen Bradley ControlLogix platform controllers.
- Replace and relocate the Siemens PLC System controlling the Pressure Filter System.
- Programming of the Allen Bradley ControlLogix controllers to match the original Bristol Babcock logic functionality.
- Modification of the existing control panels to replace the Bristol Babcock PLC hardware with Allen Bradley ControlLogix including various components to allow for proper functionality.
- Replacement of several field instruments such as level transmitters.

The Allen Bradley ControlLogix processors were programmed using Rockwell Software's RSLogix 5000. The existing HMI Application was modified to reference the address information for the new Allen Bradley ControlLogix processors and a newly defined tagname convention as coordinated with the Owner.

A detailed Factory Acceptance Test was held at the Revere facility where the system was demonstrated for the Consulting Engineer and the Boca Raton Plant Operations and Maintenance Staff. Modification of the existing controls panels were performed onsite with limited shutdown of various plant areas. The plant remained in operation with portions of the plant operated in manual mode while each area's control panels were upgraded.

Gainesville Regional Utilities
4747 N Main Street
Gainesville, FL 32609

November 13, 2020

To Whom It May Concern:

Gainesville Regional Utilities (GRU) has utilized the services of Revere Controls for many years at several of our water and wastewater facilities. They are currently providing services under our Instrumentation and Controls General Services Agreement (GSA). Under the GSA Revere has provided services related to maintaining, changing, and updating our GE iFix SCADA system. They provide support for our Allan Bradley compact and control logix PLCs. In 2014, Revere Controls provided services to completely replace the SCADA and PLC systems at our only water plant which services nearly 190,000 people in the Gainesville Area.

GRU has enjoyed a long standing and successful relationship to with Revere Controls. Revere exceeds expectations from their project management to their field staff performing the modifications necessary to keep our facilities working well. GRU has been thoroughly satisfied with Revere's performance on these contracts and will continue to use their services in the future. If you have any further questions please feel free to contact me at 352-393-1618.

Regards,



Rachel A. Haeseler, P.E.
Supervising Utility Engineer
Treatment Plants and Lift Stations
Gainesville Regional Utilities

Patrick S. Shane
SCADA System Administrator
Orange Co. Utilities, Water Production
Orlando, FL 32825

November 16, 2020

To whom it may concern,

I am writing to recommend Revere Controls for any I&C work project that a City or County Municipality might need. We have been working with Revere controls on several projects over the past few years. In fact, we will be increasing our relationship with them by entering into a very large project for the coming year of upgrading all of our PLC's, system wide.

They do an excellent job, are always punctual, knowledgeable, and courteous with an emphasis on attention to detail. We have always been satisfied with their quality of work and they usually go above and beyond.

I am proudly writing this letter to recommend the services of Revere Controls. If you have any questions, please feel free to contact me.

Thank you,

Patrick S. Shane

**ENVIRONMENTAL SERVICES DEPARTMENT**

**UTILITIES OPERATIONS DIVISION**

SEMINOLE COUNTY
FLORIDA'S NATURAL CHOICE

November 12, 2020

To Whom It May Concern,

My name is Elisa Williams, Water Operations Manager for Seminole County Environmental Services – Utilities Division.

I have been working for Seminole County Environmental Services (SEMCO-ES) for at least ten (10) years and even though REVERE Control Systems has been collaborating with SEMCO-ES before I became a part of the division, I personally have had the pleasure of working with REVERE Control Systems in the past five years. REVERE has and is still currently handling almost all of Utilities Operations Programming Operational Support that included SCADA controls, treatment plant immediate process improvements, Lift Station programming/troubleshooting; to name a few. Dan Kistner, who we fondly call our "resident on-call programmer" brought a new level of professionalism to our needs.

Utilities Operations have always been happy with REVERE's performance; our long standing relationship with the company is evidence to this.

I am happy to recommend the services of REVERE Control Systems. If you have any questions, please feel free to contact me.

Sincerely,



*Elisa Matarlo Williams*
Interim Utilities Division Manager/Water Operations Manager
Seminole County Environmental Services
3304 Dike Road
Winter Park, FL 32792
(407) 665-2759

# Project Management Institute

THIS IS TO CERTIFY THAT

## Nanette D Johnson

HAS BEEN FORMALLY EVALUATED FOR DEMONSTRATED EXPERIENCE, KNOWLEDGE AND PERFORMANCE IN ACHIEVING AN ORGANIZATIONAL OBJECTIVE THROUGH DEFINING AND OVERSEEING PROJECTS AND RESOURCES AND IS HEREBY BESTOWED THE GLOBAL CREDENTIAL

## Project Management Professional (PMP)®

IN TESTIMONY WHEREOF, WE HAVE SUBSCRIBED OUR SIGNATURES UNDER THE SEAL OF THE INSTITUTE

**Tony Appleby**
Chair, Board of Directors

**Sunil Prashara**
President and Chief Executive Officer

PROJECT MANAGEMENT INSTITUTE CORPORATE SEAL 1969 PENNSYLVANIA

**PMP® Number:** 1203917
**PMP® Original Grant Date:** 20 August 2008
**PMP® Expiration Date:** 19 August 2023

Project Management Institute.

# Project Management Institute

THIS IS TO CERTIFY THAT

## Peter Micheal Fathy Basily

HAS BEEN FORMALLY EVALUATED FOR DEMONSTRATED EXPERIENCE, KNOWLEDGE AND PERFORMANCE IN ACHIEVING AN ORGANIZATIONAL OBJECTIVE THROUGH DEFINING AND OVERSEEING PROJECTS AND RESOURCES AND IS HEREBY BESTOWED THE GLOBAL CREDENTIAL

## Project Management Professional (PMP)®

IN TESTIMONY WHEREOF, WE HAVE SUBSCRIBED OUR SIGNATURES UNDER THE SEAL OF THE INSTITUTE

**Tony Appleby**
Chair, Board of Directors

**Sunil Prashara**
President and Chief Executive Officer

PROJECT MANAGEMENT INSTITUTE CORPORATE SEAL 1969 PENNSYLVANIA

**PMP® Number:** 2050759
**PMP® Original Grant Date:** 10 July 2017
**PMP® Expiration Date:** 09 July 2023

Project Management Institute




# Revere Control Systems

has been audited and conforms to all requirements necessary to be a

## CSIA Certified Member

*The certification audit covers the following business and management categories:*

- General Management
- Human Resources Management
- Marketing, Business Development and Sales Management
- Financial Management
- Project Management
- System Development Lifecycle
- Supporting Activities
- Quality Management
- Service and Support
- Information Systems Management and Cyber Security

| | |
|---|---|
| Date of Certification: | January 27, 2021 |
| Date of Expiration: | December 3, 2023 |
| Certified Member Since: | October 8, 2002 |
| CSIA Member Since: | April 4, 2000 |

# VTScada

Software for Monitoring & Control

# Certified Solution Partner

# Revere Control Systems

TRIHEDRAL ENGINEERING LIMITED
INCORPORATED
1986

August 21, 2013
Date

Patrick Cooke - Director of Marketing

25 Years
Trihedral
1986-2011



Solution Partner

A ROCKWELL AUTOMATION PARTNER

# Revere Control Systems, INC

Birmingham, AL

has achieved Rockwell Automation PartnerNetwork™ certification as a Solution Partner

- Discrete
- Process / PlantPax
- Machinery Safety
- Drives SI
- Low Voltage Drive Capability

Name of Rockwell Automation Issuer

Blake Moret
Chairman & CEO

Name of Rockwell Automation Issuer

Darin Harbor

SI/SP Program Manager

**2020** Annual Membership

Rockwell Automation

Ron DeSantis, Governor

FBPE
FLORIDA BOARD OF PROFESSIONAL ENGINEERS

# STATE OF FLORIDA

## BOARD OF PROFESSIONAL ENGINEERS

THE ENGINEERING BUSINESS HEREIN IS AUTHORIZED UNDER THE PROVISIONS OF CHAPTER 471, FLORIDA STATUTES

# REVERE CONTROL SYSTEMS

2240 ROCKY RIDGE ROAD
VESTAVIA HILLS AL 35216

**LICENSE NUMBER: CA8769**

**EXPIRATION DATE: FEBRUARY 28, 2021**

Always verify licenses online at MyFloridaLicense.com

Do not alter this document in any form.

This is your license. It is unlawful for anyone other than the licensee to use this document.

Ron DeSantis, Governor

Halsey Beshears, Secretary

# STATE OF FLORIDA
# DEPARTMENT OF BUSINESS AND PROFESSIONAL REGULATION

## CONSTRUCTION INDUSTRY LICENSING BOARD

THE GENERAL CONTRACTOR HEREIN IS CERTIFIED UNDER THE
PROVISIONS OF CHAPTER 489, FLORIDA STATUTES

## PAYTON, BENJAMIN R

REVERE CONTROL SYSTEMS, INC.
2240 ROCKY RIDGE ROAD
BIRMINGHAM AL 35216

**LICENSE NUMBER: CGC1526173**

**EXPIRATION DATE: AUGUST 31, 2022**

Always verify licenses online at MyFloridaLicense.com

Do not alter this document in any form.

This is your license. It is unlawful for anyone other than the licensee to use this document.

Ron DeSantis, Governor

Halsey Beshears, Secretary

# STATE OF FLORIDA
# DEPARTMENT OF BUSINESS AND PROFESSIONAL REGULATION

## ELECTRICAL CONTRACTORS LICENSING BOARD

THE ELECTRICAL CONTRACTOR HEREIN IS CERTIFIED UNDER THE
PROVISIONS OF CHAPTER 489, FLORIDA STATUTES
Additional Business Qualification

## PAYTON, BENJAMIN ROSS

REVERE CONTROL SYSTEMS, INC.
2240 ROCKY RIDGE ROAD
BIRMINGHAM AL 35216

**LICENSE NUMBER: EC13008291**

**EXPIRATION DATE: AUGUST 31, 2022**

Always verify licenses online at MyFloridaLicense.com

Do not alter this document in any form.

This is your license. It is unlawful for anyone other than the licensee to use this document.






# Detail by FEI/EIN Number

Foreign Profit Corporation
REVERE CONTROL SYSTEMS, INC.

**Filing Information**

| | |
|---|---|
| **Document Number** | F96000006332 |
| **FEI/EIN Number** | 63-0794615 |
| **Date Filed** | 12/05/1996 |
| **State** | AL |
| **Status** | ACTIVE |

**Principal Address**

2240 ROCKY RIDGE ROAD
BIRMINGHAM, AL 35216

**Mailing Address**

2240 ROCKY RIDGE ROAD
BIRMINGHAM, AL 35216

**Registered Agent Name & Address**

BUSINESS FILINGS INCORPORATED
1200 SOUTH PINE ISLAND ROAD
PLANTATION, FL 33324

Name Changed: 09/30/2019

Address Changed: 09/30/2019

Annual Reports

| Report Year | Filed Date |
|---|---|
| 2018 | 03/08/2018 |
| 2019 | 04/25/2019 |
| 2020 | 05/22/2020 |

Officer/Director Detail
Name & Address

Title President
ADAMS, ROBERT R
2668 Altadena Road
Birmingham, AL 35243

Title VP
ADAMS, THOMAS M
5643 POCAHONTAS RD.
BESSEMER, AL 35244

Title VP
BRADDOCK, THOMAS R
932 ALFORD AVENUE
BIRMINGHAM, AL 35226

Title VP, Secretary
Johnson, Nanette D
959 Tyler Crest Lane
Hoover, AL 35226

Title VP
York, Thomas C
2715 Brogans Bluff Dive
Colorado Springs, CO
80919

Title VP
Graves, George Gregory
5216 Valleybrook Circle
Birmingham, AL 35244

Title VP
Handley, Marc
4695 Sandpiper Lane
Birmingham, AL 35244

Title VP
Leeper, Jason W
6902 Sugar Crest Drive
Texarkana, AR 71854

Title VP
Williams, David L
77 County Road 487
Vandiver, AL 35176

# CITY OF LAKELAND

## BUSINESS TAX RECEIPT

*Business Tax Office, 228 S Massachusetts Ave., Lakeland, FL 33801*

**Expires on:** 9/30/2021

**Account Number:** 1386606
**Workers:** 8
**Square Footage:** 10,400
**Fee:** $379.14

**Location Address**
3810 DRANE FIELD RD #5- 8

**Business Name & Mailing Address**
REVERE CONTROL SYSTEMS INC

ROBERT R ADAMS, OWNER
3810 DRANE FIELD RD #7
LAKELAND,FL 33811

This business tax receipt does not permit the holder to operate in violation of any City law, ordinance or regulation. Any change in location or ownership must be approved by the City Business Tax Section, subject to zoning restrictions. This Receipt does not constitute an endorsement, approval or disapproval of the holder's skill or competence or of the compliance or noncompliance of the holder with other laws, regulations or standards.

CITY OF Lakeland

RECEIPT MUST BE CONSPICUOUSLY DISPLAYED IN YOUR PLACE OF BUSINESS

VALID ONLY WHEN SIGNED

| Bus. Type(s) Bus. Subtype(s) | Quantity |
|---|---|
| CAT I-OFFICE PROFESSIONAL FIRM | |
| CATEGORY I | |

---

**POLK COUNTY LOCAL BUSINESS TAX RECEIPT**
ACCOUNT NO. **166437** **CLASS: B** **EXPIRES: 9/30/2021**

OWNER NAME
**ADAMS, ROBERT R**

LOCATION
**3810 DRANE FIELD RD STE 7**
**LAKELAND - IN**

BUSINESS NAME AND MAILING ADDRESS

**REVERE CONTROL SYSTEMS, INC**

**2240 ROCKY RIDGE RD**
**BIRMINGHAM, AL 35216**

| CODE | ACTIVITY TYPE |
|---|---|
| 230130 | CONTRACTOR ELECTRICAL UNLIMITE |
| 540190 | PROFESSIONAL ENGINEER |

PROFESSIONAL LICENSE (IF APPLICABLE)
**8769**

**OFFICE OF JOE G. TEDDER, CFC * TAX COLLECTOR**

THIS POLK COUNTY LOCAL BUSINESS TAX RECEIPT MUST BE CONSPICUOUSLY DISPLAYED AT THE BUSINESS LOCATION

PAID-1521751.0001-0001 08/27/2020 08/27/2020 RZL 159 57.75 DEBORAH HAYNES

TC301F-20

Ron DeSantis, Governor

Halsey Beshears, Secretary

# STATE OF FLORIDA
# DEPARTMENT OF BUSINESS AND PROFESSIONAL REGULATION

## ELECTRICAL CONTRACTORS LICENSING BOARD

THE ELECTRICAL CONTRACTOR HEREIN IS CERTIFIED UNDER THE
PROVISIONS OF CHAPTER 489, FLORIDA STATUTES
Additional Business Qualification

## GEISLER, STEVEN SR

DURHAM ELECTRIC, INC.
511 NE 42ND STREET
OAKLAND PARK FL 33334

**LICENSE NUMBER: EC13005093**

**EXPIRATION DATE: AUGUST 31, 2022**

Always verify licenses online at MyFloridaLicense.com

Do not alter this document in any form.

This is your license. It is unlawful for anyone other than the licensee to use this document.

COBBS ALLEN

February 3, 2021

Bob Adams
Revere Control Systems, Inc.
2240 Rocky Ridge Rd.
Birmingham, AL 35216

RE: Bond Capacity

Dear Mr. Adams,

Per your request, I am writing to confirm the bond capacity of your company, Revere Control Systems. Revere Control Systems is capable of bonding single projects up to $15 million and an aggregate of $35 million.

Your surety, The Hanover Insurance Company, is rated "A Excellent" by A.M. Best and has a financial size category of XIV. In addition, Hanover's US Treasury Listing is $143,592,000.

As you know, we highly recommend Revere Control Systems to any owner or general contractor considering the use of it's services.

As is usual, each individual bond request is considered at the time of the request and is subject to normal underwriting criteria.

Please let me know if I can be of any additional assistance.

Sincerely,

Joey Bole, AFSB

# CERTIFICATE OF LIABILITY INSURANCE

DATE (MM/DD/YYYY): 12/21/2020

**THIS CERTIFICATE IS ISSUED AS A MATTER OF INFORMATION ONLY AND CONFERS NO RIGHTS UPON THE CERTIFICATE HOLDER. THIS CERTIFICATE DOES NOT AFFIRMATIVELY OR NEGATIVELY AMEND, EXTEND OR ALTER THE COVERAGE AFFORDED BY THE POLICIES BELOW. THIS CERTIFICATE OF INSURANCE DOES NOT CONSTITUTE A CONTRACT BETWEEN THE ISSUING INSURER(S), AUTHORIZED REPRESENTATIVE OR PRODUCER, AND THE CERTIFICATE HOLDER.**

**IMPORTANT: If the certificate holder is an ADDITIONAL INSURED, the policy(ies) must be endorsed. If SUBROGATION IS WAIVED, subject to the terms and conditions of the policy, certain policies may require an endorsement. A statement on this certificate does not confer rights to the certificate holder in lieu of such endorsement(s).**

| | |
|---|---|
| **PRODUCER**<br>Cobbs Allen<br>115 Office Park Drive<br>Suite 200<br>Birmingham AL 35223 | **CONTACT NAME:** Sarah Riley<br>**PHONE (A/C, No, Ext):** 205-874-3590 **FAX (A/C, No):** 205-414-8105<br>**E-MAIL ADDRESS:** sriley@cobbsallen.com |
| **INSURED** REVER01<br>Revere Control Systems, Inc.<br>2240 Rocky Ridge Road<br>Birmingham AL 35216 | **INSURER(S) AFFORDING COVERAGE** / **NAIC #**<br>**INSURER A :** Charter Oak Fire — 25615<br>**INSURER B :** Travelers Property Casualty Co of Amer — 25674<br>**INSURER C :** Alabama Self-Insured WC Fund — 5502<br>**INSURER D :** Ironshore Specialty Insurance — 25445<br>**INSURER E :** Phoenix Ins Co — 25623<br>**INSURER F :** The Travelers Indemnity Co |

**COVERAGES** **CERTIFICATE NUMBER:** 1220176560 **REVISION NUMBER:**

THIS IS TO CERTIFY THAT THE POLICIES OF INSURANCE LISTED BELOW HAVE BEEN ISSUED TO THE INSURED NAMED ABOVE FOR THE POLICY PERIOD INDICATED. NOTWITHSTANDING ANY REQUIREMENT, TERM OR CONDITION OF ANY CONTRACT OR OTHER DOCUMENT WITH RESPECT TO WHICH THIS CERTIFICATE MAY BE ISSUED OR MAY PERTAIN, THE INSURANCE AFFORDED BY THE POLICIES DESCRIBED HEREIN IS SUBJECT TO ALL THE TERMS, EXCLUSIONS AND CONDITIONS OF SUCH POLICIES. LIMITS SHOWN MAY HAVE BEEN REDUCED BY PAID CLAIMS.

| INSR LTR | TYPE OF INSURANCE | ADDL INSR | SUBR WVD | POLICY NUMBER | POLICY EFF (MM/DD/YYYY) | POLICY EXP (MM/DD/YYYY) | LIMITS | |
|---|---|---|---|---|---|---|---|---|
| A | **GENERAL LIABILITY**<br>X COMMERCIAL GENERAL LIABILITY<br>CLAIMS-MADE X OCCUR<br>GEN'L AGGREGATE LIMIT APPLIES PER:<br>POLICY X PRO-JECT LOC | | | 6306D652658 | 12/1/2020 | 12/1/2021 | EACH OCCURRENCE<br>DAMAGE TO RENTED PREMISES (Ea occurrence)<br>MED EXP (Any one person)<br>PERSONAL & ADV INJURY<br>GENERAL AGGREGATE<br>PRODUCTS - COMP/OP AGG | $ 1,000,000<br>$ 500,000<br>$ 10,000<br>$ 1,000,000<br>$ 5,000,000<br>$ 2,000,000 |
| E | **AUTOMOBILE LIABILITY**<br>X ANY AUTO<br>ALL OWNED AUTOS / SCHEDULED AUTOS<br>X HIRED AUTOS / X NON-OWNED AUTOS | | | 8101L985407 | 12/1/2020 | 12/1/2021 | COMBINED SINGLE LIMIT (Ea accident)<br>BODILY INJURY (Per person)<br>BODILY INJURY (Per accident)<br>PROPERTY DAMAGE (Per accident) | $ 1,000,000<br>$<br>$<br>$ |
| B | X **UMBRELLA LIAB** X OCCUR<br>**EXCESS LIAB** CLAIMS-MADE<br>DED X RETENTION $ 10,000 | | | CUP9J360798 | 12/1/2020 | 12/1/2021 | EACH OCCURRENCE<br>AGGREGATE | $ 15,000,000<br>$ 15,000,000 |
| F C | **WORKERS COMPENSATION AND EMPLOYERS' LIABILITY** Y / N<br>ANY PROPRIETOR/PARTNER/EXECUTIVE OFFICER/MEMBER EXCLUDED? N<br>**(Mandatory in NH)**<br>If yes, describe under DESCRIPTION OF OPERATIONS below | N / A | | UB9M470543<br>WC100-0120900-2020A | 12/1/2020<br>1/1/2021 | 12/1/2021<br>1/1/2022 | X WC STATU-TORY LIMITS / OTH-ER<br>E.L. EACH ACCIDENT<br>E.L. DISEASE - EA EMPLOYEE<br>E.L. DISEASE - POLICY LIMIT | <br>$ 1,000,000<br>$ 1,000,000<br>$ 1,000,000 |
| D<br>A<br>D | Professional Liability<br>Installation Floater<br>Pollution Liability | | | DCP7BABWPQK001<br>6306D652658<br>DCP7BABWPQK001 | 12/1/2020<br>12/1/2020<br>12/1/2020 | 12/1/2021<br>12/1/2021<br>12/1/2021 | Per Claim/Aggregate<br>Limit<br>Per Claim/Aggregate | 5/7,000,000<br>500,000<br>2/7,000,000 |

**DESCRIPTION OF OPERATIONS / LOCATIONS / VEHICLES (Attach ACORD 101, Additional Remarks Schedule, if more space is required)**

Cyber Liability: Carrier: Hudson Excess Insurance Company, Policy # CYB-1004367-00, Policy period: 12/1/2020-12/1/2021, Limit: $5,000,000

**CERTIFICATE HOLDER**

Sample

**CANCELLATION**

**SHOULD ANY OF THE ABOVE DESCRIBED POLICIES BE CANCELLED BEFORE THE EXPIRATION DATE THEREOF, NOTICE WILL BE DELIVERED IN ACCORDANCE WITH THE POLICY PROVISIONS.**

**AUTHORIZED REPRESENTATIVE**

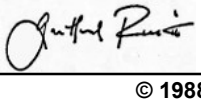

**© 1988-2010 ACORD CORPORATION. All rights reserved.**

# Village of Palm Springs

PUBLIC SERVICE DEPARTMENT

**SCADA SYSTEM UPGARDE**
**ITB# 2021B-003**
**Addendum No. 1**
**February 1, 2021**

---

**BIDS DUE: 2:00 PM, Local Time, March 10, 2021**

---

TO ALL VENDORS BIDDING ON THIS PROJECT:

The changes, additions, substitutions, and/or deletions contained in Addendum No. 1 are hereby made a part of the Bid Documents for the **SCADA System Upgrade Project**, fully and completely as if the same were fully set forth herein.

**IN THE PLANS**

No changes

**IN THE SPECIFICATIONS**

1. Bid due date has changed from 2:00 PM local time on February 11, 2021 to 2:00 PM local time on March 10, 2021.
2. Due date for the Deadline for Submissions of Questions has changed from 5:00 PM local time on January 29, 2021 to 5:00 PM local time on **February 26, 2021**.

Receipt acknowledged and conditions agreed to the 9th day of March, 2021.

Reverse Control Systems, Inc. — Bidder

Alan Johnson — By

END OF ADDENDUM

Village of Palm Springs
226 Cypress Lane • Palm Springs, Florida 33461-1699
561-965-4010 • www.vpsfl.org

# SCADA System Upgrade Main Water Treatment Plant (Main WTP)

## Bid No.: 2021B - 003

## Addendum No. 2

## February 16, 2021

---

**BIDS DUE: 2:00 PM, Local Time, March 10, 2021**

---

TO ALL VENDORS BIDDING ON THIS PROJECT:

The changes, additions, substitutions, and/or deletions contained in Addendum No. 2 are hereby made a part of the Bid Documents for the SCADA System Upgrade Main Water Treatment Plant (Main WTP) fully and completely as if the same were fully set forth herein.

**A. QUESTIONS FROM BIDDERS**

1. **Question:** Dwg. 39 Sheet E-04 shows the Remote I/O-MCP enclosure located in the southwest corner of the Chemical Building control room between the ATS and outer wall. There is a covered access in the floor (see attached picture) with its edge 19 in. from the backwall. The minimum enclosure depth available is 18 in. and with the requirements for Equipment Pad – Type C on Dwg. 70 Sheet ED-02 to extend a minimum of 2 in. around the enclosure, it would result in the access being partially covered. How do you wish to proceed?

   **Answer:** Remote I/O – MCP shall be relocated to east end of existing MCCA. Remote I/O- MCP panel shall be revised to wall mounted panel at this location. Drawing 39 shall be revised to indicate this revision.

2. **Question:** Dwg. 32 Sheet I-21 and Dwg. 38 Sheet E-03 show the lift station RTU communicating via fiber optic cable to the Remote I/O-MCP but Dwg. 61

Sheet E-26 shows a radio and antenna connection. Please verify the communication method.
**Answer:** Communication method shall be via fiber optic.

3. **Question:** The lift station control panel has been retrofitted with a Diversified Electronics Duplex Controller (please see attached pictures). Nearly all the I/O identified in Dwg. 32 Sheet I-21 Dwg. 61 Sheet E-26 are unavailable in its current condition. How do you wish to proceed?
**Answer:** Existing Main LS Control Panel shall remain as is. All I/O connections from this panel to RTU shall be future.

4. **Question:** Dwg. 40 Sheet E-05 Note 5 calls for the removal and replacement of the level transmitters with matching type. With the customer standardizing on the Vegapuls level sensor throughout their system, could it be used in this process?

   **Answer:** Existing Filter Level Transmitters shall be replaced in kind per drawing E-05, Note 5. The replacement level transmitter is specified in Section 13700 - Process Instrumentation and Controls, page 8, Article 2.04

5. **Question:** The IO count for the High Service Pump PLC -9-2 will use all available points available on the MicroLogix 1400 and expansion modules. This leaves no spares for future expansion. Can we use the CompactLogix model instead?

   **Answer:** Yes CompactLogix model may be used.

6. **Question:** Dwg. 27 Sheet I-16 lists the IO for the Remote I/O-WWR panel. The IO count is comparable to that of a standard VOPS lift station RTU. Can the lift station RTU design be used instead of the one called for in Dwg. 62 Sheet E-27? It would provide NEMA 4X integrity along with a proven tolerance to the south Florida heat. There is sufficient space in the layout for future IO expansion and the cost savings would be significant.

   **Answer:** Remote I/O – WWR Panel shall remain as indicated on Drawings E-12 and E-27.

7. **Question:** What are the specifications for the fiber optic network? Single or multi-mode cable, number of fibers, etc.

   **Answer:** Fiber Optic Cable shall be as Specified in Section 13710.

8. **Question:** Section 13759 1.01 E States that a UL Field Inspection will required on any UL panel modified during the project. Some of these panel have

already been modified from there original state. What if the panel is out of UL compliance prior to work being done on them? Who's responsible for correcting those?
**Answer:** UL Field Inspection shall not be required.

9. **Question:** What is the purpose of the Operator Interface? Is it for the local PLC only or to allow the operators to see the entire plant?
**Answer:** To Allow Operators to see the entire plant.

10. **Question:** Sheet I-12 calls for the existing flow indicators to be reused. How do we build a new FP-4-2 without removing them form the existing panel and bringing them to the shop for installation and wiring?
**Answer:** Existing Magmeters and wall mounted displays shall remain as is and in operation. These existing devices will not be relocated to new panel FP-4-2.

11. **Question:** Sheet I-12. Please verify we are adding analog speed commands to each of the existing chemical pumps.
**Answer:** Analog Speed commands are not required to the existing NaOCl pumps.

12. **Question:** Sheet I-12. Are the TU #1,2,3 INF FLOW to be hardwired of transmitted from Remote I/O-MCP to PLC-4-2 via the network?
**Answer:** These flow signals are transmitted to PLC-4-2 via the network, as noted on drawing I-12.

13. **Question:** Section 13725 4.04 E discusses a local Operator Interface HMI for the FP-4-2, there are none shown in the drawings. Does FP-4-2 get an Operator Interface?
**Answer:** There is no requirement for an operator interface at panel FP-4-2.

14. **Question:** Sheet I-10 shows hardwired signals from the contact basin VFDs to the Remote I/O-MCP. Doesn't the FP-5-1 monitor those points?
**Answer:** Yes, and future ethernet cable shall be ran from Remote I/O - MCP to each Transfer Pump VFD.

15. **Question:** Sheet I-13 shows THM FAN CONTROLS hardwired to the Remote I/O-MCP. What is the THM Fan? What is the control scheme?

**Answer:** I-13 is incorrect THM fans are controlled from FP-5-1, see drawing E-21.

16. **Question:** Sheet I-14 shows BACKWASH BLOWER AND BACKWASH PUMP CONTROLS hardwired to the Remote I/O-MCP. Doesn't FP-5-1 control those points?
**Answer:** I-14 is incorrect Backwash Blowers and backwash pumps are controlled from FP-5-1, see drawing E-21.

17. **Question:** Sheet E-22. Is the new FP-5-1 going to use the same style cabinet that exists there now?
**Answer:** Yes. See drawing E-22.

18. **Question:** Do the fiber optic runs fall under the I&C Integrators scope of work?
**Answer:** I&C Integrator is responsible for all fiber components and hardware to be incorporated with the panels and computer systems. I&C Integrator is responsible for all fiber connections. Fiber cable can be furnished and installed by I&C integrator or Electrical Contractor.

19. **Question:** Drawing E-15 shows video cable 1 ¼" conduit, UPS power ¾" conduit, I-2,4 ¾ "conduit, and I-6 ¾" conduit all noted concealed behind drywall. Will drywall be required at this location? Will furring be required? Please show limit of work required. Will the drywall require painting? Please provide specifications for these trades.
**Answer:** Proposed conduit/raceways can be concealed above the drop ceiling or installed on walls behind SCADA console or within PVC wire Mold. Exposed wire mold or conduit shall be painted to match wall. Removal/replacement of drywall or furring strips will not be required. Following completion of the SCADA and computer equipment installations the east and north walls of SCADA room shall be painted per Specifications Section 09900 – Protective Coatings, Page 14, System No. 109E.

20. **Question:** Drawing E-29 What PLC hardware is required in "full size rack" noted in replacement PLC 3-8 diagram?
**Answer:** "Full Size Rack" note is erroneous and shall be deleted. PLC hardware for existing HSP control panel, FP-9-2, shall be as indicated on Drawing E-12.

21. **Question:** Drawing E-05 What is the length of the capacitance probe required for the level transmitters?
**Answer:** Estimated probe length is 11.0 Feet. Actual length to be confirmed by CONTRACTOR during shop drawing submittal and approval phase.

22. **Question:** Section 03300 1.07 Testing. Verify this testing will be required for small patch pours of sidewalks.
**Answer:** Testing requirement for concrete patching shall be deleted.

23. **Question:** Please provide specifications for Fiber Optic Cable.

**Answer:** Fiber optic cable specification has been added to specifications section 13710.

24. **Question:** The Table of Contents list Division 16 Electrical. My documents (Specifications) do not have Sections 16000, 16001 or 16050. Please provide them.
**Answer:** Missing Specifications sections, 16000, 16001 and 16050 shall be provided via addendum No. 2.

25. **Question:** Please extend the bid date one week.
**Answer:** Village has extended the bid opening to March 10, 2021, per Addendum No. 1

26. **Question:** Regarding the requirement to have a General Contractor's License, would having a subcontractor with a GC license qualify for this requirement, or does the prime contractor need to have the GC license?

**Answer:** Prime Bidder/Contractor shall be a Florida Licensed General Contractor per Specifications Section 00200 – Instructions to Bidder's, Page 1, Article 3.01, B.

27. **Question:** The audio was bit garbled during the pre-bid meeting, please confirm the construction budget is $672,000
**Answer:** Engineer's Opinion of probable construction cost is $ 816,000.

28. **Question:** Please advise when this construction budget was established.

**Answer:** The Engineer's opinion of probable construction cost was established in September 2019.

29. **Question:** Please provide a list to identify which panels are ControLogix and those that are MicroLogix.
**Answer:** Recommendations of MicroLogix or ControLogix have been indicated on the network diagrams. It shall be the responsibility of the I&C Integrator select and finalize the design based on individual panel I/O requirements. The selections shall be finalized during the submittal approval process.

30. **Question:** Please make available an I/O list for each corresponding control panel both new and modified.
**Answer:** I/O requirements are indicated throughout the drawings.

31. **Question:** Please advise the tag count necessary for referenced VT SCADA licenses in section 13750.

**Answer:** Existing software license tag count is 25,000, proposed upgraded license tag count is 10,000.

32. **Question:** Section 13710 2.07 Industrial PC specified a Phoenix Contact Model 2913108. The response from my supplier. "The requested IPC is obsolete. Please have customer look at our VL2PPC 2000-2402760 or our BL2 PPC1100-1105780. I must point out that the BL2 product only has Windows 10 IOT options." Please advise.

**Answer:** Industrial PC specification will be updated.

33. **Question:** Will temporary wiring be necessary for any of this work?
**Answer:** Temporary wiring may be necessary for proper completion of the work, depending on CONTRACTOR's work plan and means and methods.

34. **Question:** Item 1 refers to a failover scheme between SDADA 1 and 2with the operator needing to do nothing to continue operation, but the diagram shows using SCADA 1 as the workstation. Operator will have to move keyboard, mouse and video connections if a failover occurs. Is this the intent of the design?
**Answer:** Additional monitor, keyboard and mouse will be added for the hot-backup runtime server.

35. **Question:** Item 2 lists requirements related to laptops but there are no actual laptop specs, and the laptops are not depicted on the drawings. Are we providing them with laptops and if so, what do they want and how many of them do they need?
**Answer:** laptops are not required.

36. **Question:** Item 3 lists requirements related to a workstation. This probably refers to using SCADA 1 as a workstation along with the monitors and mouse and keyboard-need this confirmed by Engineer.
**Answer:** Correct, these are the interface items for the server. A second group will be added for the backup server, per question 34 above.

**B. SPECIFICATIONS**

1. Section 00111 – Advertisement for Bid, page 1 of 1, first paragraph, **Change Bid Opening Date "February 11, 2021" to "March 10, 2021".**

2. Section 00451 – Qualification Statement, page 5 of 8, Article 10 Financial Information, **Clarification Made to Highlighted Yellow Paragraph.**

3. Section 13700 – Process Instrumentation and Controls, page 18, Article2.17, paragraph B, **ADD,** "12. Where indicated on drawings, provide interior and exterior white powder coating."

4. Section 13700 – Process Instrumentation and Controls, page 18, Article2.18, paragraph B, **ADD,** "12. Where indicated on drawings, provide interior and exterior white powder coating."

5. Section 13700 – Process Instrumentation and Controls, page 23, Article2.23, paragraph A, **ADD,** "1. None."

6. Section 13710 – Programmable Logic Controller, **DELETE AND REPLACE THIS SECTION IN ITS ENTIRITY.** The following articles were modified or added: 1.06, 2.03, 2.04, 2.05, 2.06, 2.07, 2.08, 2.09, 2.10, 2.11, 2.12,2.13, and 2.14.

7. Section 13711 – Existing SCADA System Modifications, **DELETE AND REPLACE THIS SECTION IN ITS ENTIRITY.** The following articles were modified or added: 2.01 and 2.03.

8. Section 13725 – Loop Functions/Programming Strategies/Protocol, page 19, Article 4.04, E,1, **DELETE** "...local HMI and..."

9. Section 13750 – SCADA System Software, **DELETE AND REPLACE THIS SECTION IN ITS ENTIRITY.** The following articles were modified or added: 1.03 and 2.01.

10. Section 13752 – Computers and Accessories, Page 2, Article 1.02, A, 2, **DELETE THIS ARTICLE IN ITS ENTIRITY.**

11. Section 13752 – Computers and Accessories, Page 3, Article 2.01, B, **ADD THE FOLLOWING:**

12. Section 13759 – Modifications to Existing Field Panels, MCC's and PLC's, Page 1, Article 1.01, E, **DELETE THIS ARTICLE IN ITS ENTIRITY.**

13. Section 16000 – Electrical General Requirements, **ADD THIS SECTION TO THE SPECIFICATIONS BOOKLET.**

14. Section 16001 – Electrical Demolition, **ADD THIS SECTION TO THE SPECIFICATIONS BOOKLET.**

15. Section 16050 – Basic materials and Methods, **ADD THIS SECTION TO THE SPECIFICATIONS BOOKLET.**

## C. DRAWINGS

1. The following Drawings have been modified to address the questions from Bidders listed above:

Drawing No. 21 of 70, Sheet I-10, Unit Process 4 – Disinfection (Contact Basin).

Drawing No. 23 of 70, Sheet I-12, Unit Process 4 – Disinfection (NaOCl Feed Pumps).

Drawing No. 24 of 70, Sheet I-13, Unit Process 5 – Filtration.

Drawing No. 25 of 70, Sheet I-14, Unit Process 5 – Filtration.

Drawing No. 32 of 70, Sheet I-21, Unit Process 0 – Support Systems (Main Lift Station).

Drawing No. 38 of 70, Sheet E-03, Electrical Site Plan Details.

Drawing No. 39 of 70, Sheet E-04, Chemical Feed Building Electrical Plan.

Drawing No. 45 of 70, Sheet E-10, Network Diagrams (Sheet 2).

Drawing No. 46 of 70, Sheet E-11, Network Diagrams (Sheet 3).

Drawing No. 47 of 70, Sheet E-12, Network Diagrams (Sheet 4).

Drawing No. 48 of 70, Sheet E-13, Network Diagrams (Sheet 5).

Drawing No. 49 of 70, Sheet E-14, Network Console Details.

Drawing No. 50 of 70, Sheet E-15, Network Riser Diagrams.

Drawing No. 51 of 70, Sheet E-16, FP-4-2 NaOCl Feed System Panel Replacement (Sheet 1).

Drawing No. 52 of 70, Sheet E-17, FP-4-2 NaOCl Feed System Panel Replacement (Sheet 2).

Drawing No. 56 of 70, Sheet E-21, FP-5-1 Filter Control Panel Modifications (Sheet 4).

Drawing No. 58 of 70, Sheet E-23, Remote IO - MCP (Sheet 1).

Drawing No. 59 of 70, Sheet E-24, Remote IO - MCP (Sheet 2).

Drawing No. 60 of 70, Sheet E-25, Remote IO - MCP (Sheet 3).

Drawing No. 61 of 70, Sheet E-26, Main Lift Station Remote Telemetry Unit.

Drawing No. 63 of 70, Sheet E-28, Remote IO – Washwater Recovery (Sheet 2).

Drawing No. 64 of 70, Sheet E-29, MIEX Transfer Control Panel Modifications (Sheet 1).

Drawing No. 65 of 70, Sheet E-30, MIEX Transfer Control Panel Modifications (Sheet 2).

Drawing No. 68 of 70, Sheet E-33, Specific Details – Electrical.

All modifications to the above list of drawings have been identified with a revision triangle.

Receipt acknowledged and conditions agreed to the 9th day of March, 2021.

Reverse Control Systems, Inc.
Bidder

Yan Johnson
By

END OF ADDENDUM

# Village of Palm Springs

226 Cypress Lane • Palm Springs, Florida 33461-1699
561-965-4010 • www.vpsfl.org


## SCADA System Upgrade Main Water Treatment Plant (Main WTP)

## Bid No.: 2021B - 003

## Addendum No. 3

## March 8, 2021

---

**BIDS DUE: 2:00 PM, Local Time, March 10, 2021**

TO ALL VENDORS BIDDING ON THIS PROJECT:

The changes, additions, substitutions, and/or deletions contained in Addendum No. 2 are hereby made a part of the Bid Documents for the SCADA System Upgrade Main Water Treatment Plant (Main WTP) fully and completely as if the same were fully set forth herein.

**A. QUESTIONS FROM BIDDERS**

1. **Question:** Deskjet Printers don't support 11x17, Officejet appeared to have the cheapest alternative.

   **Answer:** Provide Officejet or equal.

2. **Question:** "extra long video cables" is hard to price. After a certain length you have to turn to active signal repeating cables, which can extend the price. Same goes with USB devices. A length is really needed.

   **Answer:** Cable lengths required can be estimated from the scaled drawings of the Bid documents.

3. **Question:** LG and most other leading display companies only make models in 55" and 65", but not 60".

   **Answer:** Provide a 65" monitor in place of indicated 60" Monitor.

4. **Question:** They want 3 monitors from a server...this isn't a correct usage case for a server. A server is only going to come with 1 VGA. We need a workstation with a GPU to run three monitors for the workstation. I would suggest keeping the servers and adding a workstation under the monitor desk.

   **Answer:** Provide Dell workstation of equivalent class/configuration as SCADA Servers, with capability to drive multiple video monitors to match system configurations. Provide a dedicated keyboard and mouse for the video workstation and a dedicated keyboard and mouse for the servers. Workstation shall have a client license. Workstation shall be selected by system integrator with approval by ENGINEER during the shop drawing submittal approval process.

5. **Question:** it says Netgear wireless router in the specs, but the drawings only refer to a VPN router and firewall. Netgear doesn't make a business class firewall/vpn device. They have a home device, with some capabilities, but this isn't suggested for a business environment.

   **Answer:** Provide business class router/firewall/VPN devices as manufactured by Cisco or equal. Model /part number(s) shall be selected by integrator based on system configuration requirements.

6. **Question:** Raid controller presumed to be configured in a mirrored Raid 1.

   **Answer:** Raid controller shall be configured as Mirrored Raid 1 so data is identically written on two drives, if one drive fails there is an existing mirror copy ready to be used.

**B. SPECIFICATIONS**

1. No revisions.

**C. DRAWINGS**

1. No revisions.

All modifications to the above list of drawings have been identified with a revision triangle.

Receipt acknowledged and conditions agreed to the 9th day of March, 2021.

Revere Control Systems, Inc. Dan Johnson

Bidder By

END OF ADDENDUM

# Tabulation Sheet

**Agency Name** Village of Palm Springs

**Bid Number** ITB-2021B-003-0-2021/KW

**Bid Name** SCADA System Upgrade – Main Water Treatment Plant

**Bid Due Date** 03/10/2021 14:00:00

**Bid Opening** **Closed**

4 responses found.

✓ online, offline, ● not submitting, not received

| | Company | Responded | Address | Bid Amount | Alt Bid Amount | Declared Attributes | Documents | Sent |
|---|---|---|---|---|---|---|---|---|
| **Complete** | | | | | | | | |
| 1 . | Boromei Construction, Inc | 03/10/2021 | 420B NW 3rd St., Okeechobee, FL, 34972 | $924756.00 | | | Proposal | ✓ |
| 2 . | Curry Controls Company | 03/09/2021 | 4245 S. Pipkin Road, Lakeland, FL, 33811 | $943260.00 | | | Proposal | ✓ |
| 3 . | Revere Control Systems, Inc. | 03/10/2021 | 3810 Drane Field Road #7, Lakeland, FL, 33813 | $866000.00 | | | Proposal | ✓ |
| 4 . | TLC Diversified, Inc. | 03/10/2021 | 2719 17TH STREET EAST, Palmetto, FL, 34221 | $1087600.00 | | | Proposal | ✓ |

**VILLAGE OF PALM SPRINGS**
**PALM SPRINGS, FL**
**ITB NO. 2021B-003**
**SCADA SYSTEM UPGRADE – MAIN WATER TREATMENT PLANT**

## ADVERTISEMENT FOR BIDS

Electronic sealed Bids for the construction of the **SCADA System Upgrade, Main Water Treatment Plant,** will be received by the **Village of Palm Springs** at the **Office of the Village Clerk until 2:00 PM, local time on February 11, 2021**, at which time the Bids received will be publicly opened and read**. All bids received after the deadline will be returned unopened. T**he Village of Palm Springs will provide for public participation through Gotowebinar.com, a communication media technology (teleconference) for the **Bid Opening.** The Physical Point of Access is Village Hall, located at 226 Cypress Lane, Palm Springs, FL 33461.

Participants can use their telephone or computer mic & speakers (VoIP).
United States (631) 992-3221Access Code# 176-099-922
Registration URL: https://attendee.gotowebinar.com/register/5565251084037966608
Webinar ID: 713-249-811

The Project consists of furnishing all labor, equipment and material for the Main Water Treatment Plant SCADA System Upgrade as described by the Drawings and Specifications. Generally, the work includes minor demolition, installation of new Control panels and SCADA Computers, network improvements, SCADA Software upgrades, programming, electrical, site restoration and all other incidentals as indicated by the drawings and specifications or as required to properly complete the project as planned.

Invitation to Bid documents are available beginning **January 14, 2021**. The Village of Palm Springs utilizes electronic online services for notification, distribution, and submittal of its Solicitation documents. The Village's Solicitation information can be obtained from: (a) Demandstar website – www.Demandstar.com; (b) contact the Village Clerk, Kimberly Wynn, at kwynn@vpsfl.org; (c) call the Village Clerk's office at (561) 965-4010.

Hard copies of bidding Documents may be obtained from Eckler Engineering, Inc. on Mondays through Fridays between the hours of 8:00 AM to 5:00 PM. Bidding Documents are available on compact disc (as portable document format (PDF) files) for a non-refundable charge of $25.00, including shipping via overnight express service. Alternatively, printed Bidding Documents may be obtained from Eckler Engineering, Inc. either via in-person pick-up or via mail, upon receipt of payment for the Bidding Documents. The non-refundable cost of printed Bidding Documents is $160.00 per set, payable to Eckler Engineering, Inc.

Proposers may submit their responses electronically via DemandStar. Proposers also have the option to submit one (1) unbound original, one (1) copy to the Village Clerk at the time and date specified. Sealed Proposals must be marked **"ITB #2021B-003, SCADA SYSTEM UPGRADE – MAIN WATER TREATMENT PLANT"**.

A **Pre-Bid Conference** will be held remotely for this solicitation on **January 26, 2021, at 2:00 PM.** Attendance at the pre-bid conference is not mandatory. The Village of Palm Springs will provide for public participation through Gotowebinar.com, a communication media technology (teleconference) for the **pre-bid conference**. The Physical Point of Access is Village Hall at 226 Cypress Lane, Palm Springs, FL 33461.

Participants can use their telephone or computer mic & speakers (VoIP).
United States +1 (562) 247-8422 Access Code# 117-702-545
Registration URL: https://attendee.gotowebinar.com/register/409158375791262224
Webinar ID: 601-772-467

Bid security shall be furnished in accordance with the Instructions to Bidders.

Any questions regarding the specifications and Solicitation process must be submitted in writing to the Village Clerk at kwynn@vpsfl.org, Questions and requests for clarification and additional information must be received prior to the Deadline for Submission of Questions on **January 29, 2021,** at 5:00 PM local time.

Pursuant to Section 2-355 of Palm Beach County Ordinance No. 2011-039, and the purchasing policies of the Village of Palm Springs, all Solicitations, once advertised, are under the "Cone of Silence" until the appropriate authority has approved an award recommendation, rejected all responses or some other action by the Village to end the selection process. This limit and requires documentation of communications between potential Bidders and/or Bidders on Village Solicitations, the Village's professional staff, and the Village Council members.

Village of Palm Springs
Kimberly Wynn, Village Clerk
January 14, 2021
Lake Worth Herald and Demandstar

+ + END OF ADVERTISEMENT FOR BIDS + +

BID DOCUMENTS

CONTRACT DOCUMENTS
FOR

# SCADA SYSTEM UPGRADE MAIN WATER TREATMENT PLANT (MAIN WTP)

FOR THE

## VILLAGE OF PALM SPRINGS, FLORIDA

THE VILLAGE OF PALM SPRINGS
GARDEN SPOT OF PALM BEACH COUNTY
FLORIDA


ECKLER ENGINEERING

CONSULTANTS

ELECTRICAL:
C&W ENGINEERING–CA NO. 6245
2775 VISTA PARKWAY, SUITE G–6
WEST PALM BEACH, FL 33411


CITY OFFICIALS

| | |
|---|---|
| BEV SMITH | MAYOR |
| JONI S. BRINKMAN | VICE MAYOR, DISTRICT 4 |
| PATTI WALLER | MAYOR PRO TEM, DISTRICT 2 |
| DOUG GUNTHER | COUNCIL MEMBER, DISTRICT 1 |
| GARY M. READY | COUNCIL MEMBER, DISTRICT 3 |
| RICHARD J. READE | VILLAGE MANAGER |
| RONALD R. EYMA, P.E. | PUBLIC SERVICES DIRECTOR |

Sunshine811

CALL 811 OR WWW.SUNSHINE811.COM TWO FULL BUSINESS DAYS BEFORE DIGGING TO HAVE UTILITIES LOCATED AND MARKED.

*CHECK POSITIVE RESPONSE CODES BEFORE YOU DIG!*

BID NO.:2021B-003

THESE DOCUMENTS PREPARED BY

ECKLER ENGINEERING, INC.

DOUGLAS K. HAMMANN, P.E. 50589
GENERAL, CIVIL, PROCESS

MICHAEL A. GUIDA, P.E. 60755
ELECTRICAL

PROJECT N0.: 400-077.01
DATE: AUGUST 26, 2020


FOR INFORMATION REGARDING THIS PROJECT CONTACT :
ECKLER ENGINEERING, INC. – CA NO. 7803
4700 RIVERSIDE DRIVE, SUITE 110
CORAL SPRINGS, FL. 33067
(954) 510–4700



File name: C:\Civil 3D Projects\400-077.01 - Scada System Upgrades Main and R. L. Pratt WTP\01_Working (Main)\400-077.01_G-00.dwg; Plotted @: 12/23/2020 1:27:35 PM; Scale multiplier: 0.5; Printed by: Matheus Siqueira; Design Milestone: BID DOCUMENTS

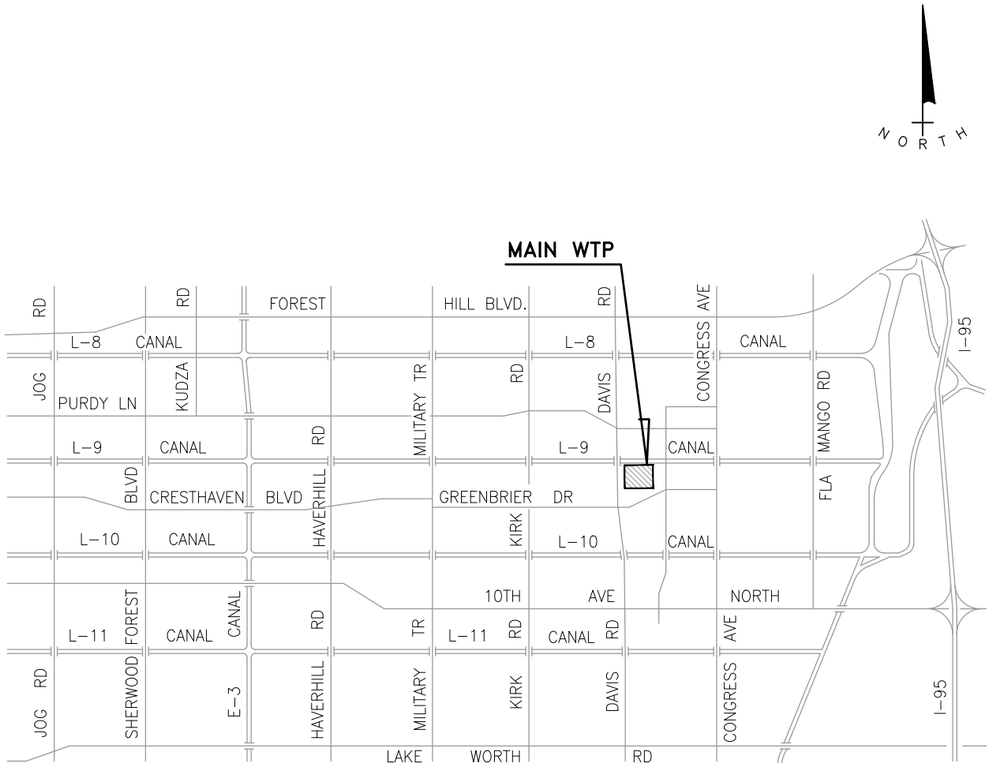


PROJECT LOCATION MAP

N.T.S.

LOCATION: 360 DAVIS ROAD
PALM SPRINGS, FL 33461

FEMA FLOOD ZONE: ZONE X
- ZONE X - AREA DETERMINED TO BE OUTSIDE THE 0.2% ANNUAL CHANCE FLOODPLAIN*

*(FLOOD HAZARD INFORMATION DERIVED FROM THE AUTHORITATIVE NFHL WEB SERVICES ROVIDED BY FEMA)

PARCEL ID NO.: 70-43-44-18-09-090-0010

# INDEX TO DRAWINGS


| DWG NO. | OF | TOTAL DWGS | SHEET | DESCRIPTION |
|---|---|---|---|---|
| | | | | **GENERAL** |
| 1 | OF | 70 | G-0 | COVER SHEET |
| 2 | OF | 70 | G-01 | PROJECT LOCATION MAP AND INDEX TO DRAWINGS |
| 3 | OF | 70 | G-02 | GENERAL NOTES AND ABBREVIATIONS |
| 4 | OF | 70 | G-03 | PROCESS AND INSTRUMENTATION LEGENDS (SHEET 1) |
| 5 | OF | 70 | G-04 | PROCESS AND INSTRUMENTION LEGENDS (SHEET 2) |
| 6 | OF | 70 | G-05 | DESIGN CRITERIA (SHEET 1) |
| 7 | OF | 70 | G-06 | DESIGN CRITERIA (SHEET 2) |
| 8 | OF | 70 | G-07 | SEQUENCE OF CONSTRUCTION AND COORDINATION |
| | | | | **CIVIL** |
| 9 | OF | 70 | C-01 | OVERALL SITE PLAN |
| 10 | OF | 70 | C-02 | SITE RESTORATION PLAN |
| 11 | OF | 70 | CD-01 | STANDARD DETAILS – CIVIL |
| | | | | **INSTRUMENTATION** |
| 12 | OF | 70 | I-01 | OVERALL PLANT SCHEMATIC |
| 13 | OF | 70 | I-02 | UNIT PROCESS 2 – SOFTENING (LIME) |
| 14 | OF | 70 | I-03 | UNIT PROCESS 3 – PRETREATMENT (MIEX SYSTEM) MODIFICATIONS |
| 15 | OF | 70 | I-04 | UNIT PROCESS 3 – PRETREATMENT (MIEX SYSTEM) MODIFICATIONS |
| 16 | OF | 70 | I-05 | UNIT PROCESS 3 – PRETREATMENT (MIEX SYSTEM) MODIFICATIONS |
| 17 | OF | 70 | I-06 | UNIT PROCESS 3 – PRETREATMENT (MIEX SYSTEM) MODIFICATIONS |
| 18 | OF | 70 | I-07 | UNIT PROCESS 3 – PRETREATMENT (MIEX SYSTEM) MODIFICATIONS |
| 19 | OF | 70 | I-08 | UNIT PROCESS 3 – PRETREATMENT (MIEX SYSTEM) MODIFICATIONS |
| 20 | OF | 70 | I-09 | UNIT PROCESS 3 – PRETREATMENT (MIEX SYSTEM) MODIFICATIONS |
| 21 | OF | 70 | I-10 | UNIT PROCESS 4 – DISINFECTION (CONTACT BASIN) |
| 22 | OF | 70 | I-11 | UNIT PROCESS 4 – DISINFECTION (NaOCL STORAGE) MODIFICATIONS |
| 23 | OF | 70 | I-12 | UNIT PROCESS 4 – DISINFECTION (NaOCL FEED PUMPS) MODIFICATIONS |
| 24 | OF | 70 | I-13 | UNIT PROCESS 5 – FILTRATION MODIFICATIONS |
| 25 | OF | 70 | I-14 | UNIT PROCESS 5 – FILTRATION MODIFICATIONS |
| 26 | OF | 70 | I-15 | UNIT PROCESS 6 – CHEMICAL FEED SYSTEMS MODIFICATIONS |
| 27 | OF | 70 | I-16 | UNIT PROCESS 7 – WASHWATER RECOVERY MODIFICATIONS |
| 28 | OF | 70 | I-17 | UNIT PROCESS 8 – LIME PREPARATION – FEED MODIFICATIONS |
| 29 | OF | 70 | I-18 | UNIT PROCESS 9 – HFINISHED WATER (STORAGE AND HIGH SERVICE) |
| 30 | OF | 70 | I-19 | UNIT PROCESS 9 – FINISHED WATER (STORAGE AND HIGH SERVICE) |
| 31 | OF | 70 | I-20 | UNIT PROCESS 0 – SUPPORT SYSTEMS (EMERGENCY GENERATOR) |
| 32 | OF | 70 | I-21 | UNIT PROCESS 0 – SUPPORT SYSTEMS (MAIN LIFT STATION) |
| 33 | OF | 70 | I-22 | HMI FUNCTION CRITERIA TABLES (SHEET 1) |
| 34 | OF | 70 | I-23 | HMI FUNCTION CRITERIA TABLES (SHEET 2) |
| 35 | OF | 70 | ID-01 | STANDARD DETAILS – INSTRUMENTATION AND CONTROLS |
| | | | | **ELECTRICAL** |
| 36 | OF | 70 | E-01 | ELECTRICAL NOTES AND LEGENDS |
| 37 | OF | 70 | E-02 | ELECTRICAL SITE PLAN |
| 38 | OF | 70 | E-03 | ELECTRICAL SITE PLAN DETAILS |
| 39 | OF | 70 | E-04 | CHEMICAL FEED BUILDING ELECTRICAL PLAN |
| 40 | OF | 70 | E-05 | FILTER BUILDING (TOP) ELECTRICAL PLAN |
| 41 | OF | 70 | E-06 | MIEX REGENERATION BUILDING ELECTRICAL PLAN |
| 42 | OF | 70 | E-07 | EXISTING ADMINISTRATION – LABORATORY BUILDING ELECTRICAL PLAN |
| 43 | OF | 70 | E-08 | EXISITNG SCADA CONTROL ROOM ELECTRICAL PLAN |
| 44 | OF | 70 | E-09 | NETWORK DIAGRAMS (SHEET 1) |
| 45 | OF | 70 | E-10 | NETWORK DIAGRAMS (SHEET 2) |
| 46 | OF | 70 | E-11 | NETWORK DIAGRAMS (SHEET 3) |
| 47 | OF | 70 | E-12 | NETWORK DIAGRAMS (SHEET 4) |
| 48 | OF | 70 | E-13 | NETWORK DIAGRAM (SHEET 5) |
| 49 | OF | 70 | E-14 | NETWORK CONSOLE DETAILS |
| 50 | OF | 70 | E-16 | FP-4-2 NaOCL FEED SYSTEM PANEL REPLACEMENT (SHEET 1) |
| 51 | OF | 70 | E-15 | NETWORK RISER DIAGRAMS |
| 52 | OF | 70 | E-17 | FP-4-2 NaOCL SYSTEM PANEL REPLACEMENT (SHEET 2) |
| 53 | OF | 70 | E-18 | FP-5-1 FILTER CONTROL PANEL MODIFICATIONS (SHEET 1) |
| 54 | OF | 70 | E-19 | FP-5-1 FILTER CONTROL PANEL MODIFICATIONS (SHEET 2) |
| 55 | OF | 70 | E-20 | FP-5-1 FILTER CONTROL PANEL MODIFICATIONS (SHEET 3) |
| 56 | OF | 70 | E-21 | FP-5-1 FILTER CONTROL PANEL MODIFICATIONS (SHEET 4) |
| 57 | OF | 70 | E-22 | FP-5-1 FILTER CONTROL PANEL MODIFICATIONS (SHEET 5) |
| 58 | OF | 70 | E-23 | REMOTE IO – MCP (SHEET 1) |
| 59 | OF | 70 | E-24 | REMOTE IO – MCP (SHEET 2) |
| 60 | OF | 70 | E-25 | REMOTE IO – MCP (SHEET 3) |
| 61 | OF | 70 | E-26 | MAIN LIFT STATION REMOTE TELEMETRY UNIT |
| 62 | OF | 70 | E-27 | REMOTE IO PANEL – WASHWATER RECOVERY (SHEET 1) |
| 63 | OF | 70 | E-28 | REMOTE IO PANEL – WASHWATER RECOVERY (SHEET 2) |
| 64 | OF | 70 | E-29 | MIEX TRANSFER CONTROL PANEL MODIFICATIONS (SHEET 1) |
| 65 | OF | 70 | E-30 | MIEX TRANSFER CONTROL PANEL MODIFICATIONS (SHEET 2) |
| 66 | OF | 70 | E-31 | HIGH SERVICE PUMP CONTROL PANEL MODIFICATION (SHEET 1) |
| 67 | OF | 70 | E-32 | HIGH SERVICE PUMP CONTROL PANEL MODIFICATION (SHEET 2) |
| 68 | OF | 70 | E-33 | SPECIFIC DETAILS – ELECTRICAL |
| 69 | OF | 70 | ED-01 | STANDARD DETAILS – ELECTRICAL |
| 70 | OF | 70 | ED-02 | STANDARD DETAILS – ELECTRICAL |



**ECKLER ENGINEERING, INC.**
4700 RIVERSIDE DRIVE, SUITE 110 - CORAL SPRINGS, FL 33067
(954) 510-4700 - FAX (954) 755-2741
CA No. 7803


DSGN: D. K. HAMMANN
DR: R.PAEZ
CHK: D. K. HAMMANN
APVD: D. K. HAMMANN

VERIFY SCALE
1"
BAR IS ONE INCH ON ORIGINAL DRAWING. ADJUST SCALES AS NECESSARY.

| No. | DATE | REVISIONS | BY | APVD |
|---|---|---|---|---|

CONSULTANT

---
DOUGLAS K. HAMMANN, P.E.
FL # 50589

**VILLAGE OF PALM SPRINGS**

SCADA SYSTEM UPGRADE MAIN WATER TREATMENT PLANT (MAIN WTP)
2021B-003

PROJECT LOCATION MAP AND INDEX TO DRAWINGS

DWG NO. 2 OF 70
SHEET G-01
PROJ. NO. 400-077.01
DATE AUGUST 26, 2020


File name: C:\Civil 3D Projects\400-077.01 - Scada System Upgrades Main and R. L. Pratt WTP\01_Working (Main)\400-077.01_G-01.dwg; Plotted @: 3/29/2017 7:18:36 PM; Scale multiplier: 0.5; Printed by: Matheus Siqueira; Milestone: BID DOCUMENTS


BID DOCUMENTS

# GENERAL NOTES

1) ALL CONSTRUCTION AND MATERIALS SHALL CONFORM TO THE STANDARDS AND SPECIFICATIONS OF THE DEPARTMENT OF TRANSPORTATION, FLORIDA DEPARTMENT OF ENVIRONMENTAL PROTECTION, PALM BEACH COUNTY HEALTH DEPARTMENT, FLORIDA BUILDING CODE (LATEST EDITION), AND ALL OTHER LOCAL AND NATIONAL CODES WHERE APPLICABLE.

2) ALL CONSTRUCTION SHALL BE DONE IN A SAFE MANNER, SPECIFICALLY, THE RULES AND REGULATIONS OF THE OCCUPATIONAL SAFETY AND HEALTH ADMINISTRATION AND THE MANUAL OF UNIFORM TRAFFIC CONTROL DEVICES SHALL BE STRICTLY OBSERVED.

3) ALL ELEVATIONS ON THE DRAWINGS OR REFERENCED IN THE SPECIFICATIONS ARE BASED ON NORTH AMERICAN VERTICAL DATUM OF 1988 (NAVD88), UNLESS NOTED OTHERWISE.

4) THE CONTRACTOR SHALL OBTAIN THE SERVICES OF A UTILITY LOCATION SERVICE SUCH AS "SUNSHINE STATE ONE CALL OF FLA, INC." AT (800) 432-4770 AT LEAST 48 HOURS PRIOR TO BEGINNING ANY EXCAVATION.

5) EXISTING UTILITY LOCATIONS SHOWN ON THESE DRAWINGS ARE APPROXIMATE. THE ENGINEER ASSUMES NO RESPONSIBILITY FOR THE ACCURACY OF EXISTING UTILITIES SHOWN OR FOR ANY EXISTING UTILITIES NOT SHOWN.

6) PRIOR TO BEGINNING CONSTRUCTION, THE CONTRACTOR SHALL VERIFY THE SIZE LOCATION AND MATERIAL OF ALL EXISTING UTILITIES WITHIN THE AREA OF CONSTRUCTION.

7) IF UPON EXCAVATION, AN EXISTING UTILITY IS FOUND TO BE IN CONFLICT WITH THE PROPOSED CONSTRUCTION OR TO BE OF A SIZE OR MATERIAL DIFFERENT FROM THAT SHOWN ON THE DRAWINGS, THE CONTRACTOR SHALL IMMEDIATELY NOTIFY THE ENGINEER.

8) STANDARD SEPARATION STATEMENT:

   A. MAINTAIN A MINIMUM THREE (3) FOOT HORIZONTAL DISTANCE BETWEEN WATER MAINS AND VACUUM SEWER, STORM SEWER, OR RECLAIMED WATER MAINS REGULATED UNDER PART III OF CHAPTER 62-610.

   B. MAINTAIN A MINIMUM SIX (6) FOOT HORIZONTAL DISTANCE BETWEEN WATER MAINS AND GRAVITY SEWER, PRESSURE-TYPE SANITARY SEWER, OR RECLAIMED WATER MAINS NOT REGULATED UNDER PART III OF CHAPTER 62-610.

      THIS DISTANCE CAN BE REDUCED TO THREE (3) FOOT HORIZONTAL DISTANCE WHEN EITHER PIPE IS ENCLOSED IN A WATERTIGHT CASING OR CONCRETE; AND WHEN WATER MAINS ARE LOCATED AT LEAST SIX (6) INCHES ABOVE GRAVITY SEWER MAINS.

   C. MAINTAIN A MINIMUM TEN (10) FOOT HORIZONTAL DISTANCE BETWEEN WATER MAINS AND ONSITE SEWAGE TREATMENT AND DISPOSAL SYSTEMS.

   D. MAINTAIN SIX (6) INCH VERTICAL SEPARATION WHERE WATER MAINS CROSS ABOVE VACUUM SEWER, GRAVITY SEWER, OR STORM SEWER.

   E. MAINTAIN A TWELVE (12) INCH VERTICAL SEPARATION WHERE WATER MAINS CROSS BELOW VACUUM SEWER, GRAVITY SEWER, OR STORM SEWER.

   F. MAINTAIN A TWELVE (12) INCH VERTICAL SEPARATION WHERE WATER MAINS CROSS ABOVE OR BELOW PRESSURE-TYPE SANITARY SEWER, FORCE MAIN, OR RECLAIMED WATER MAINS.

9) THE CONTRACTOR SHALL PERFORM ALL WORK NECESSARY TO LOCATE, EXCAVATE AND PREPARE FOR CONNECTIONS TO THE EXISTING SYSTEMS ALL AS SHOWN ON THE DRAWINGS. THE COST FOR THIS WORK AND FOR THE ACTUAL CONNECTION TO THE EXISTING SYSTEMS SHALL BE INCLUDED IN THE BID PRICE FOR THE PROJECT AND SHALL NOT RESULT IN ANY ADDITIONAL COST TO THE OWNER.

10) CONTRACTOR MUST PROVIDE FOR AND MAINTAIN ADEQUATE ACCESS AT ALL TIMES TO ALL BUSINESSES AND RESIDENCES AFFECTED BY PROGRESS OF THE WORK.

11) PROJECT SITE SAFETY:

   A. THE ENGINEER/OWNER OR THEIR EMPLOYEES HAVE NO AUTHORITY TO EXERCISE ANY CONTROL OVER THE CONTRACTOR, ANY SUB-CONTRACTOR OR OTHER ENTITY OR THEIR EMPLOYEES IN CONNECTION WITH THEIR WORK OR ANY JOBSITE HEALTH OR SAFETY PRECAUTIONS.

   B. THE CONTRACTOR IS SOLELY RESPONSIBLE FOR JOBSITE SAFETY, AND WARRANTS THAT THIS INTENT IS MADE EVIDENT BY THE AGREEMENT BETWEEN OWNER AND CONTRACTOR.

   C. ALL EXISTING OVERHEAD AND UNDERGROUND UTILITIES SHOWN ON THESE DRAWINGS OR ENCOUNTERED THROUGH THE PROGRESSION OF WORK AT THIS PROJECT SITE ARE ASSUMED TO BE LIVE, CONTRACTOR SHALL BE RESPONSIBLE FOR ALL SAFETY PRECAUTIONS WHEN WORKING AROUND EXISTING OVERHEAD OR UNDERGROUND UTILITIES.

12) VALVE BOXES AND MANHOLE RIM ELEVATIONS SHOWN ARE APPROXIMATE. CONTRACTOR SHALL ADJUST VALVE BOX AND MANHOLE RIM ELEVATIONS AS REQUIRED TO MEET FINAL GRADES.

13) ALL PIPE AND PIPE FITTINGS INSTALLED UNDER THIS PROJECT SHALL BE COLOR CODED OR MARKED IN ACCORDANCE WITH SUBPARAGRAPH 62-55.320(21)(B)3, F.A.C.

14) ALL OPEN-CUT PIPE LAYING OPERATIONS SHALL BE COMPLETED IN DRY TRENCH EXCAVATIONS PER SPECIFICATIONS.

# GENERAL LEGEND

- R/W — R/W LINE
- PROPERTY LINE OR LOT LINE
- CENTERLINE
- X — X — NEW FENCE LINE
- EXISTING FENCE LINE (METAL)
- EXISTING FENCE LINE (WOOD)
- EXISTING FENCE LINE (CHAIN LINK)
- EL — EASEMENT LINE
- SECTION LINE
- 17+00 — CENTERLINE & PROJECT BASELINE W/ STATIONING
- LOT 15 / BLOCK 5 / 1030 — ADDRESS NUMBER W/ LOT & BLOCK NUMBERS
- B-1 — BORING LOCATION & DESIGNATION
- 16.40 16.40 — EXISTING SPOT ELEVATION
- +10.25 — PROPOSED SPOT ELEVATION
- 84 +84 — COORDINATE CALLOUT NUMBER
- 16 — EXISTING CONTOUR LINE
- 16 — PROPOSED CONTOUR LINE
- EXISTING ASPHALT (DRIVE / ROADWAY)
- EXISTING PAVEMENT TO BE REMOVED / REPLACED
- ASPHALT OVERLAY
- NEW PAVEMENT (CONCRETE)
- NEW PAVEMENT PATCH (ASPHALT)
- EXISTING AREA OR EQUIPMENT TO BE REMOVED
- BE — EXISTING BURIED ELEC CONDUIT W/ JUNCTION BOX
- 24"SS — EXISTING STORM SEWER, CATCH BASIN AND MANHOLE
- 50'-24"RCP — NEW STORM SEWER W/ LENGTH, SIZE & PIPE MATERIAL
- INLET A / TYPE C-4 — NEW CATCH BASIN W/ DESIGNATION
- MH-34 — NEW MANHOLE WI/ DESIGNATION
- OW — OVERHEAD WIRE
- FD. P.C.P. / BM-46 / EL.=13.44 / STA. 12+73.10 — BENCH MARK & DATA
- A / C-11 — DIRECTION OF ELEVATION VIEW AND PHOTO DESIGNATION (LOCATION PHOTO TAKEN FROM)
- (STD DTL XXX) — UTILIZED TO REFERENCE A STANDARD DETAIL IN NOTES AND BLOCKS OF TEXT

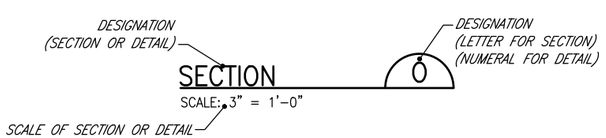


DETAIL / SECTION TITLE

# ABBREVIATIONS

| | |
|---|---|
| ADDIT | ADDITIONAL |
| AFF | ABOVE FINISHED FLOOR |
| AFG | ABOVE FINISHED GRADE |
| ALTN | ALTERNATE |
| ALUM | ALUMINUM |
| APPROX | APPROXIMATELY |
| ASPH | ASPHALT |
| ASSY | ASSEMBLY |
| AUX | AUXILIARY |
| BFP | BACKFLOW PREVENTOR |
| BOT | BOTTOM |
| BV (OR) BFV | BUTTERFLY VALVE |
| CBS | CONCRETE BLOCK STRUCTURE |
| CCW | COUNTER CLOCKWISE |
| CI | CAST IRON |
| CJT | CONTRACTION JOINT |
| CLR | CLEAR |
| CONC | CONCRETE |
| CONT | CONTINUOUS OR CONTINUATION |
| COR | CORNER |
| CPLG | COUPLING |
| CTRD | CENTERED |
| CV | CHECK VALVE |
| CW | CLOCKWISE |
| CY | CUBIC YARDS |
| DBL | DOUBLE |
| D (OR) DIA | DIAMETER |
| DIAG | DIAGONAL |
| DIP | DUCTILE IRON PIPE |
| DWG(S) | DRAWING(S) |
| EA | EACH |
| EF | EACH FACE |
| EL | ELEVATION |
| EOW | EDGE OF WATER |
| ELEC | ELECTRICAL |
| EQ SP | EQUALLY SPACED |
| EQUP | EQUIPMENT |
| EQUIP MFRS | EQUIPMENT MANUFACTURER(S) |
| EXPAN | EXPANSION |
| EXTEN | EXTENSION |
| EW | EACH WAY |
| EXIST | EXISTING |
| FF | FINISH FLOOR |
| FIN | FINISH |
| FLG | FLANGE |
| FM | FORCE MAIN |
| FND | FOUNDATION |
| FTG | FOOTING |
| GALV | GALVANIZED |
| GPH | GALLONS PER HOUR |
| GPM | GALLONS PER MINUTE |
| GSP | GALVANIZED STEEL PIPE |
| GV | GATE VALVE |
| GR | GRADE |
| HK | HOOK |
| HORIZ | HORIZONTAL |
| HWL | HIGH WATER LEVEL |
| ID | INSIDE DIAMETER |
| INF | INFLUENT |
| INV EL | INVERT ELEVATION |
| JT | JOINT |
| LBS | POUNDS |
| LG | LONG |
| LWL | LOW WATER LEVEL |
| MAX | MAXIMUM |
| MECH | MECHANICAL |
| MH | MANHOLE |
| MIN | MINIMUM |
| MJ | MECHANICAL JOINT |
| MW | MONITORING WELL |
| NIC | NOT IN CONTRACT |
| NTS | NOT TO SCALE |
| OC | ON CENTER |
| OD | OUTSIDE DIAMETER |
| OPNG(S) | OPENING(S) |
| OPP | OPPOSITE |
| PE | PLAIN END |
| PJE | PREMOLDED JOINT FILLER |
| PL | PLATE |
| PLCS | PLACES |
| PS | PUMP STATION |
| PR | PAIR |
| R (OR) RAD | RADIUS |
| RED | REDUCER |
| REINF | REINFORCING |
| REQD | REQUIRED |
| REST | RESTRAINED |
| R/W | RIGHT OF WAY |
| SAN | SANITARY |
| S/A | SUPPLY AIR |
| SCH | SCHEDULE |
| SF | SQUARE FOOT |
| SNGL | SINGLE |
| SQ | SQUARE |
| SS | STORM SEWER |
| SST | STAINLESS STEEL |
| STA | STATION |
| STD | STANDARD |
| STL | STEEL |
| STY | STORY |
| SUPPT | SUPPORT |
| SV | SOLENOID VALVE |
| SW | SIDEWALK |
| T/ | TOP OF |
| T/A | TRANSFER AIR |
| T&B | TOP AND BOTTOM |
| TEMP | TEMPERATURE |
| THK | THICK |
| TOB | TOP OF BANK |
| TRD(S) | TREAD(S) |
| TU | TREATMENT UNIT |
| TYP | TYPICAL |
| VERT | VERTICAL |
| VPS | VACUUM PUMP STATION |
| VSS | VACUUM SEWER SYSTEM |
| W | WIDTH |
| W/ | WITH |
| WM | WATER MAIN |

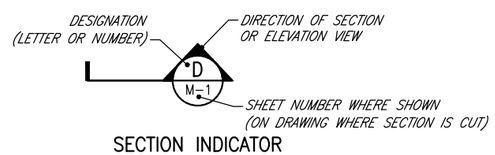


SECTION INDICATOR

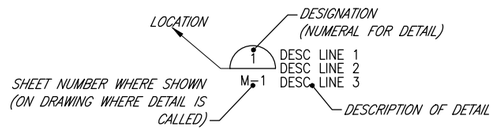


NON-STANDARD DETAIL DESIGNATION

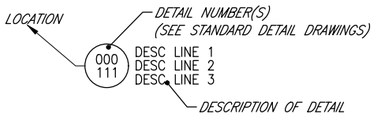


STANDARD DETAIL DESIGNATION

## SECTION AND DETAIL DESIGNATION

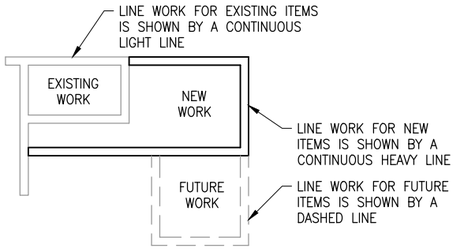


THIS CONVENTION APPLIES TO ALL WORK DISCIPLINES. (CIVIL, ARCHITECTURAL MECHANICAL, INSTRUMENTATION & CONTROL AND ELECTRICAL)

## EXISTING, NEW AND FUTURE DESIGNATION

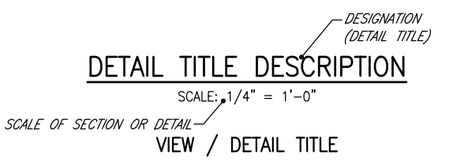


VIEW / DETAIL TITLE


**ECKLER ENGINEERING, INC.**
4700 RIVERSIDE DRIVE, SUITE 110 - CORAL SPRINGS, FL 33067
(954) 510-4700 - FAX (954) 755-2741
CA No. 7803


| | |
|---|---|
| DSGN: | D. K. HAMMANN |
| DR: | R.PAEZ |
| CHK: | D. K. HAMMANN |
| APVD: | D. K. HAMMANN |

VERIFY SCALE — 1" — BAR IS ONE INCH ON ORIGINAL DRAWING. ADJUST SCALES AS NECESSARY.

| No. | DATE | REVISIONS | BY | APVD |
|---|---|---|---|---|

CONSULTANT

----
DOUGLAS K. HAMMANN, P.E.
FL # 50589

**VILLAGE OF PALM SPRINGS**
SCADA SYSTEM UPGRADE MAIN WATER TREATMENT PLANT (MAIN WTP)
2021B-003

GENERAL NOTES AND ABBREVIATIONS

| | |
|---|---|
| DWG NO. | 3 |
| OF | 70 |
| SHEET | G-02 |
| PROJ. NO. | 400-077.01 |
| DATE | AUGUST 26, 2020 |

BID DOCUMENTS


File name: C:\Civil 3D Projects\400-077.01 - Scada System Upgrades Main and R. L. Pratt WTP\01_Working (Main)\400-077.01_G-02 MULTI.dwg; Plotted @: 12/23/2020 1:27:48 PM; Scale multiplier: 0.5; Printed by: Matheus Siqueira; Milestone: BID DOCUMENTS

# INSTRUMENT NUMBERING LEGEND

MAIN WATER TREATMENT PLANT

| FIRST DIGIT MAJOR PROCESS | SECOND DIGIT SUB–PROCESS | THIRD DIGIT FUNCTION | FOURTH DIGIT & SUFFIX |
|---|---|---|---|
| 1 – INFLUENT RAW WATER | SYSTEMATIC SEQUENTIAL NUMBERING OF FUNCTION STEPS THRU UNIT PROCESS | 1 – UNIT 1<br>2 – UNIT 2<br>3 – UNIT 3<br>4 – UNIT 4<br>5 – UNIT 5<br>6 – UNIT 6<br>7 – UNIT 7<br>8 – UNIT 8<br>9 – UNIT 9 | ADDITIONAL SEQUENTIAL NUMBERING FOR CONVENIENCE (AS APPLICABLE) |
| 2 – SOFTENING (LIME) | | | |
| 3 – PRETREATMENT (MIEX SYSTEM) | | | |
| 4 – DISINFECTION (NaOCL) | | | |
| 5 – FILTRATION | | | |
| 6 – CHEMICAL FEED SYSTEMS | | | |
| 7 – WASHWATER RECOVERY | | | |
| 8 – LIME PREPARATION / FEED | | | |
| 9 – FINISH WATER (STORAGE AND HIGH SERVICE PUMPING) | | | |
| 0 – SUPPORT SYSTEMS | | | |

# MEANINGS OF IDENTIFICATION LETTERS

| | FIRST LETTER | | SUCCEEDING LETTERS | | |
|---|---|---|---|---|---|
| | MEASURED OR INITIATING VARIABLE | MODIFIER | READOUT OR PASSIVE FUNCTION | OUTPUT FUNCTION | MODIFIER |
| A | ANALYSIS | | ALARM | | |
| B | BURNER, COMBUSTION | | USER'S CHOICE | USER'S CHOICE | USER'S CHOICE |
| C | CONDUCTIVITY | CHECK | | CONTROL | (CLOSED) |
| D | DENSITY (MASS) OR SPECIFIC GRAVITY | DIFFERENTIAL | | | |
| E | VOLTAGE (EMF) | | SENSOR (PRIMARY ELEMENT) | | |
| F | FLOW RATE | RATIO (FRACTION) | | | |
| G | GAUGING (DIMENSIONAL) | | GLASS, VIEWING DEVICE | | |
| H | HAND (MANUAL) | | | | HIGH |
| I | CURRENT (ELECTRICAL) | | INDICATE | | |
| J | POWER | SCAN | | | |
| K | TIME OR TIME SCHEDULE | TIME RATE OF CHANGE | | CONTROL STATION | |
| L | LEVEL | | LIGHT | | LOW |
| M | MOISTURE | MOMENTARY | | | MIDDLE OR INTERMEDIATE |
| N | USER'S CHOICE | (NORMALLY) | USER'S CHOICE | USER'S CHOICE | USER'S CHOICE |
| O | USER'S CHOICE | | ORIFICE (RESTORATION) | | OPEN |
| P | PRESSURE OR VACUUM | | POINT (TEST CONN.) | | |
| Q | QUANTITY OR EVENT | INTEGRATE OR TOTALIZE | | | |
| R | RADIATION | | RECORD | | |
| S | SPEED OR FREQUENCY | SAFETY | | SWITCH | |
| T | TEMPERATURE | TORQUE | | TRANSMIT | |
| U | MULTIVARIABLE | | MULTIFUNCTION | MULTIFUNCTION | MULTIFUNCTION |
| V | VIBRATION, MECHANICAL ANALYSIS | | | VALVE, DAMPER OR LOUVER | |
| W | WEIGHT OR FORCE | | WELL | | |
| X | UNCLASSIFIED | X AXIS | UNCLASSIFIED | UNCLASSIFIED | UNCLASSIFIED |
| Y | EVENT, STATE OR PRESENCE | Y AXIS | | RELAY OR COMPUTE | |
| Z | POSITION, DIMENSION | Z AXIS | | DRIVE, ACTUATE OR UNCLASSIFIED FINAL CONTROL ELEMENT | |

## ABBREVIATIONS

| | |
|---|---|
| ACP | AREA CONTROL PANEL |
| AI | ANALOG INPUT |
| AO | ANALOG OUTPUT |
| BOP | BOTTOM OF PIPE |
| BOS | BOTTOM OF STEEL |
| CI | CAST IRON |
| CONC | CONCENTRIC |
| CS | CARBON STEEL |
| CW | CHAIN WHEEL |
| DI | DISCRETE INPUT |
| DO | DISCRETE OUTPUT |
| ECC | ECCENTRIC |
| EL | ELEVATION |
| EXIST | EXISTING |
| FC | FAIL CLOSED |
| FI | FAIL INTERMEDIATE |
| FL | FAIL LOCKED |
| FLG | FLANGE |
| FO | FAIL OPEN |
| FP | FIELD PANEL |
| HMI | HUMAN MACHINE INTERFACE |
| HP | HIGH PRESSURE |
| HOA | HAND/OFF/AUTO |
| AI | INSTRUMENT AIR |
| VFD | VARIABLE FREQUENCY DRIVE |
| LC | LOCKED CLOSED |
| LO | LOCKED OPEN |
| LLL | LOW PRESSURE CONDENSATE |
| LP | LOW PRESSURE |
| LT | LOW TEMPERATURE |
| MA | MANUAL/AUTO |
| MAX | MAXIMUM |
| MCC | MOTOR CONTROL CENTER |
| MCP | MAIN CONTROL PANEL |
| MIN | MINIMUM |
| MW | MANWAY |
| NC | NORMALLY CLOSED |
| NLL | NORMAL LIQUID LEVEL |
| NO | NORMALLY OPEN |
| OO | ON/OFF |
| ORR | ON/OFF/REMOTE |
| PLC | PROGRAMMABLE LOGIC CONTROLLER |
| GPM | GALLONS PER MINUTE |
| ORIF | ORIFICE |
| PDP | PRIMARY DISTRIBUTION PANEL |
| PE | PRESSURE END |
| PROP | PROPOSED |
| RED | REDUCER |
| SC | SAMPLE CONNECTION |
| SCADA | SUPERVISORY CONTROL AND DATA ACQUISITION |
| SCH | SCHEDULE |
| SD | SHUTDOWN |
| SP | SAMPLE POINT |
| SST | STAINLESS STEEL |
| STD | STANDARD |
| STI | STRIPPING TOWER INFLUENT |
| SV | SOLENOID VALVE |
| TYP | TYPICAL |
| UPS | UNINTERRUPTED POWER SUPPLY |

## INSTRUMENT IDENTIFICATION

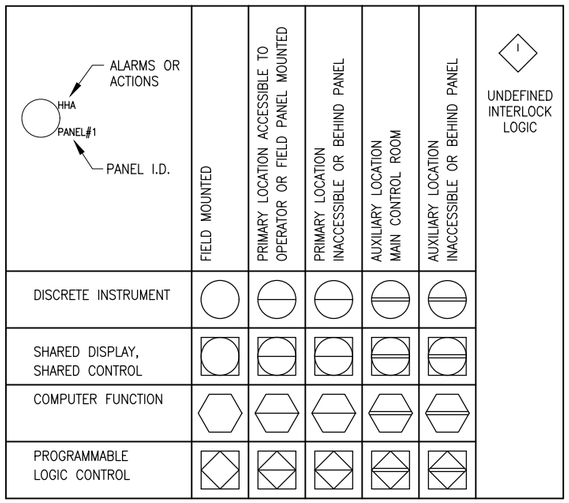



**ECKLER ENGINEERING, INC.**
4700 RIVERSIDE DRIVE, SUITE 110 - CORAL SPRINGS, FL 33067
(954) 510-4700 - FAX (954) 755-2741
CA No. 7803


DSGN: D. K. HAMMANN
DR: R.PAEZ
CHK: D. K. HAMMANN
APVD: D. K. HAMMANN

VERIFY SCALE
1"
BAR IS ONE INCH ON ORIGINAL DRAWING. ADJUST SCALES AS NECESSARY.

| No. | DATE | REVISIONS | BY | APVD |
|---|---|---|---|---|

CONSULTANT

---
DOUGLAS K. HAMMANN, P.E.
FL # 50589

**VILLAGE OF PALM SPRINGS**

SCADA SYSTEM UPGRADE MAIN WATER TREATMENT PLANT (MAIN WTP)
2021B-003

PROCESS AND INSTRUMENTATION LEGENDS (SHEET 1)

DWG NO. 4 OF 70
SHEET G-03
PROJ. NO. 400-077.01
DATE AUGUST 26, 2020


File name: C:\Civil 3D Projects\400-077.01 - Scada System Upgrades Main and R. L. Pratt WTP\01_Working (Main)\400-077.01_G-02 MULTI.dwg; Plotted @: 12/23/2020 1:27:49 PM; Scale multiplier: 0.5; Printed by: Matheus Siqueira; Milestone: BID DOCUMENTS


BID DOCUMENTS

# PROCESS & INSTRUMENTATION LEGEND

## VALVE SYMBOLS

- GATE VALVE
- GLOBE VALVE
- BALL VALVE
- BUTTERFLY VALVE
- CHECK VALVE
- DIAPHRAGM VALVE
- NEEDLE VALVE
- PLUG VALVE
- RELIEF VALVE
- VALVE W/ HAND OPERATOR
- SOLENOID VALVE
- ROTOMETER
- PRESSURE REDUCING VALVE (SELF CONTAINED)
- PISTON OPERATED VALVE
- PINCH VALVE
- ELECTRICAL MOTOR OPERATED VALVE
- DIAPHRAGM OPERATED VALVE
- 3-WAY SOLENOID VALVE
- QUICK COUPLING HOSE CONNECTION
- THREADED HOSE CONNECTION
- BULKHEAD FITTING
- DIFFUSER (FLAPPER) CHECK VALVE

## GENERAL SYMBOLS

- UNION
- DRAIN
- "Y" STRAINER
- "T" STRAINER
- FLEXIBLE HOSE
- FLANGE
- REDUCER
- SLOPE LINE
- EMERGENCY EYEWASH/ SHOWER HEAD
- VERTICAL CANTILEVERED PUMP
- VERTICAL TURBINE PUMP IN CAN
- VERTICAL CENTRIFUGAL PUMP
- FILTER / REGULATOR
- DOUBLE DIAPHRAGM PUMP (AIR OPERATED)
- ORIFICE FLANGE W/ PLATE
- COMPRESSOR
- MIXER
- MAGMETER
- DIAPHRAGM SEAL
- CENTRIFUGAL PUMP FOOT MOUNTED
- EMERGENCY EYEWASH/ SHOWER SIGNAL LIGHT
- VERTICAL TURBINE PUMP
- SUBMERSIBLE PUMP
- ANALYTICAL ELEMENT
- ADJUSTABLE SPEED CONTROL (ELECTRIC)
- VARIABLE SPEED CONTROL (MECHANICAL)
- VARIABLE FREQUENCY DRIVE
- REDUCER / MOTOR DRIVE UNIT
- SEPARATOR
- FLOAT SWITCH
- CENTRIFUGAL PUMP RECEIVER MOUNTED
- EDUCTOR
- CHEMICAL FEE PUMP (DIAPHRAGM)
- VACUUM CHEMICAL DOSING UNIT

- STATUS LIGHT, PANEL MOUNTED
- AUDIBLE HORN
- PANEL MOUNTED DEVICE
- SUB PANEL MOUNTED DEVICE
- FIELD MOUNTED DEVICE
- COMPUTER FUNCTION
- PLC FUNCTION
- SHARED DISPLAY / CONTROL (OF COMPUTER OR PLC FUNCTION)
- NEW PANEL MOUNTED INTERLOCK (HARDWIRED)
- WIRING CONTINUATION
- UNIT BOUNDARY
- HOSE CONNECTION
- MEDIA CONVERTER FIBER OPTIC TO ETHERNET
- ETHERNET RADIO/MODEM
- ANTENNA
- LEVEL ELEMENT/TRANSMITTER (CAPACITANCE PROBE)
- LEVEL ELEMENT/TRANSMITTER (ULTRASONIC)
- LEVEL ELEMENT/TRANSMITTER (SUBMERSIBLE)
- FLUSHING CONNECTION
- SAMPLE POINT
- BACKFLOW PREVENTER
- ETHERNET HUB (SWITCH)
- ROTOMETER
- FLOW ELEMENT (VENTURI)
- FLOW ELEMENT (ORIFICE PLATE)
- DIFFUSER
- LEVEL (FLOAT)
- FLOW METER (MAGNETIC)
- PLC INPUT/OUTPUT TERMINAL
- DIAPHRAGM
- FLOW ELEMENT (PROPELLER)
- pH PROBE
- CONDUCTIVITY PROBE

- EXISTING PRIMARY PROCESS LINE
- PRIMARY PROCESS LINE
- EXISTING SECONDARY PROCESS LINE
- SECONDARY PROCESS LINE
- EXISTING TERTIARY PROCESS LINE
- TERTIARY PROCESS LINE
- ELECTRICAL SIGNAL (PROPOSED)
- ELECTRICAL SIGNAL (EXISTING)
- ANALOG SIGNAL (PROPOSED)
- ANALOG SIGNAL (EXISTING)
- VENDOR SUPPLIED CABLE (EXISTING)
- VENDOR SUPPLIED CABLE (PROPOSED)
- CAPILLARY TUBING
- COPPER TUBING
- HOSE
- 120V POWER SUPPLY
- 480V POWER SUPPLY
- ETHERNET CABLE (PROPOSED)
- ETHERNET CABLE (EXISTING)
- FIBER OPTIC CABLE (PROPOSED)
- FIBER OPTIC CABLE (EXISTING)
- INTERCEPT EXISTING WIRING (SEE ELECTRICAL DRAWINGS)
- FLOOR DRAIN OR PROPOSED DRAIN
- PROCESS FLUME
- INSTRUMENT AIR COMPRESSOR
- STATIC MIXER
- DUPLEX GFR
- PRESSURE SENSOR (FLANGE)
- LINE CONTENTS / ID / REF. DWG. NO. / NOTE — LINE CONTINUATION IN OR OUT OF DRAWING


**ECKLER ENGINEERING, INC.**
4700 RIVERSIDE DRIVE, SUITE 110 - CORAL SPRINGS, FL 33067
(954) 510-4700 - FAX (954) 755-2741
CA No. 7803


| | |
|---|---|
| DSGN: | D. K. HAMMANN |
| DR: | R.PAEZ |
| CHK: | D. K. HAMMANN |
| APVD: | D. K. HAMMANN |

VERIFY SCALE — 1" — BAR IS ONE INCH ON ORIGINAL DRAWING. ADJUST SCALES AS NECESSARY.

| No. | DATE | REVISIONS | BY | APVD |
|---|---|---|---|---|

CONSULTANT

----
DOUGLAS K. HAMMANN, P.E.
FL # 50589

**VILLAGE OF PALM SPRINGS**
SCADA SYSTEM UPGRADE MAIN WATER TREATMENT PLANT (MAIN WTP)
2021B-003

PROCESS AND INSTRUMENTION LEGENDS (SHEET 2)

| | |
|---|---|
| DWG NO. | 5 |
| OF | 70 |
| DATE | AUGUST 26, 2020 |
| SHEET | G-04 |
| PROJ. NO. | 400-077.01 |


File name: C:\Civil 3D Projects\400-077.01 - Scada System Upgrades Main and R. L. Pratt WTP\01_Working (Main)\400-077.01_G-02 MULTI.dwg; Plotted @: 12/23/2020 1:27:52 PM; Scale multiplier: 0.5; Printed by: Matheus Siqueira; Milestone: BID DOCUMENTS


BID DOCUMENTS

# DESIGN CRITERIA

## VILLAGE OF PALM SPRINGS BUILDING DEPARTMENT REQUIREMENTS:

1) CONTRACTOR SHALL COORDINATE AND OBTAIN ALL PERMITS REQUIRED FOR THE EXECUTION OF THE WORK FROM THE VILLAGE OF PALM SPRINGS BUILDING DEPARTMENT.

2) CONTRACTOR SHALL REGISTER WITH PALM SPRINGS LAND DEVELOPMENT.

3) FOLLOWING APPROVAL BY ENGINEER, CONTRACTOR SHALL SUBMIT PRODUCT APPROVAL DOCUMENTATION FOR THE FOLLOWING ITEMS TO THE BUILDING DEPARTMENT:
   - NONE REQUIRED.

4) SEPARATE PERMITS WILL BE REQUIRED FOR THE FOLLOWING:
   - OTHER PERMITS AS MAY BE REQUIRED BY BUILDING OFFICIAL.

5) REFER TO SPECIFICATIONS SECTION 01010–SUMMARY OF WORK FOR ADDITIONAL INFORMATION.

## FLOOD ELEVATION:

| | |
|---|---|
| 100 YEAR FLOOD ELEVATION: | 16.30' NAVD88 (17.78' NGVD29) |

(DATA FROM PALM BEACH COUNTY FEMA FLOOD MAP – 12099C0588F) (EFFECTIVE OCT 5, 2017)

## LEGEND

ZONE AE (EL 16.3) NAVD88

OTHER AREAS (ZONE X / D)

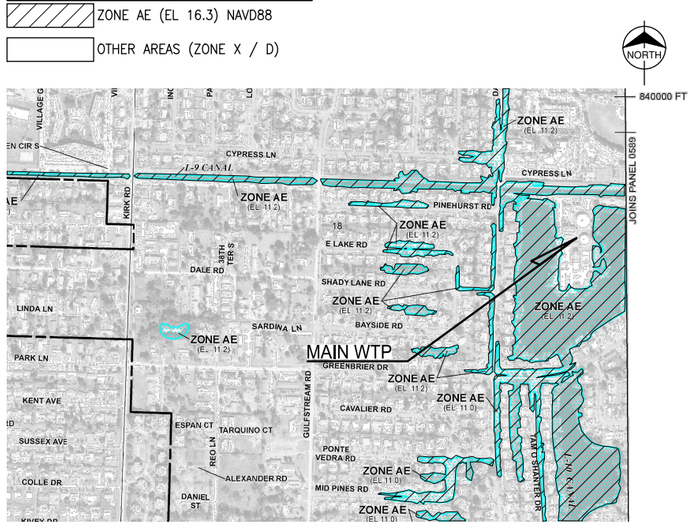


FEMA FLOOD ZONE MAP (NOT TO SCALE)

## BUILDING / STRUCTURAL

CODES
- FLORIDA BUILDING CODE, 7TH EDITION, 2020
- FLORIDA FIRE PROTECTION CODE, LATEST EDITION
- ACI 318 "BUILDING CODE REQUIREMENTS FOR REINFORCED CONCRETE"
- ALUMINUM DESIGN MANUAL "SPECIFICATIONS FOR ALUMINUM STRUCTURES", LATEST EDITION
- CRSI HANDBOOK
- AISC MANUAL OF STEEL CONSTRUCITON
  MASONRY CONSTRUCTION SHALL CONFORM TO LATEST ACI CODE REQUIREMENTS FOR CONCRETE
- MASONRY STRUCTURES (ACI 530 / ASCE 5 / TMS 402), SPECIFICATIONS FOR MASONRY STRUCTURES (ACI 530.1 / ASCE 6 / TMS 602) ASTM C476, ASTM C1019, AND NCMA TEK 107.

GENERAL

| STRUCTURE | GROSS AREA (SF) | OCCUPANCY | TYPE OF CONSTRUCTION | OCCUPANCY LOAD |
|---|---|---|---|---|
| N/A | N/A | N/A | N/A | N/A |
| | | | | |

## BUILDING / STRUCTURAL (CONTINUTED)

LIFE SAFETY PLAN ELEMENTS
- MEANS OF EGRESS
  - MINIMUM CLEAR OPENING OF DOORS: 32" (REQUIRED PER FBC 1008.1.1)
  - MINIMUM HEADROOM: 7'–6" (REQUIRED PER FBC 1003.2)
  - MINIMUM DOORWAY HEADROOM: 6'–8" (REQUIRED PER FBC 1008.1.1)
  - MINIMUM STAIR WIDTH: 36" (REQUIRED PER FBC 1009.1)
  - MINIMUM STAIRWAY HEADROOM: 6'–8" (REQUIRED PER FBC 1009.2)
- EXISTS
  - NUMBER OF EXITS REQUIRED: 1 REQUIRED PER SPACE PER FBC 1019.2
  - NUMBER OF EXITS PROVIDED: 1 PER ROOM (MINIMUM)
    2 REQUIRED PER ROOM WHERE INPUT
  - SPECIAL EXIT REQUIREMENTS: CAPACITY TO LARGEST PIECE OF INSTALLED EQUIPMENT IS >117KW
- TRAVEL DISTANCE
  - ALLOWABLE TRAVEL DISTANCE: 50' PER FBC 1029.3 (GROUP F & GROUP F SPECIAL OCCUPANCY)

DESIGN LOADING CRITERIA
- DESIGN LOADS
  - EQUIPMENT: ACTUAL
  - BRIDGE CRANE OR MONORAIL ACTUAL
  - ROOF, SUPERIMPOSED: ACTUAL, 15 PSF MIN.
- LIVE LOADS:
  - ROOF (MIN., UNREDUCED): 20 PSF
  - WALKWAYS AND PLATFORMS: 100 PSF
  - FLOOR: 100 PSF (OR HS20–44, IF APPLIES)
  - PROCESS SLABS: 200 PSF
- IMPACT LOADS
  - TRAVELING CRANES AND HOSTS: 25% OF THE LIFTED LOAD
  - ROTATING EQUIPMENT: 20% OF THE MACHINE WEIGHT
  - RECIPROCATING EQUIPMENT: 50% OF THE MACHINE WEIGHT
- WIND LOADS:
  DESIGN WIND PRESSURE DERIVED FROM ASCE 7–10 PER FBC SECTION 1609. FOR THE FOLLOWING CRITERIA:
  - BASIC WIND SPEED: 180 MPH (3 SECOND GUST)
  - RISK CATEGORY: III
  - EXPOSURE CATEGORY: C
  - INTERNAL PRESSURE COEFFICIENT: ± 0.55
  - DIRECTIONALITY FACTOR: 0.85
- BUOYANCY
  ASSUMED GROUND WATER
  - ELEVATION FOR BUOYANCY LOAD: FINISH GRADE
  - FACTOR OF SAFETY: 2.0
- FOUNDATIONS
  - ALLOWABLE SOIL BEARING CAPACITY: 2500 PSF
- EARTHQUAKE:
  NOT APPLICABLE

MATERIALS OF CONSTRUCITON
- STRUCTURAL CAST–IN–PLACE
  - CONCRETE, MIN. f'c @ 28 DAYS: 4,000 PSI
- STRUCTURAL PRECAST/PRETENSIONED/PRE–STRESSED
  - CONCRETE, MIN. f'c @ 28 DAYS: 5,000 PSI
- REINFORCING STEEL, fy: 60,000 PSI
- PRESTRESSING TENDON/STRAND: ASTM A416/A21
- STRUCTURAL STEEL:
  - ROLLED W SHAPES, ASTM A572: 50,000 PSI
  - ANGLES, CHANNELS AND PLATES, ASTM A36: 36,000 PSI
  - TUBE SECTIONS, ASTM A500, GRADE C, fy: 46,000 PSI
- MASONRY:
  - CMU UNITS, GRADE N–1, COMPRESSIVE STRENGTH: 1,900 PSI (ASTM C90)
  - COMPRESSIVE STRENGTH OF MORTAR, TYPE S: 1,800 PSI (ASTM C270)
  - COMPRESSIVE STRENGTH OF GROUT: 3,000 PSI (ASTM C476)
  - MASONRY UNIT ASSEMBLY, f'm: 1,500 PSI

## GEOTECHNICAL REPORT:

NOT APPLICABLE

## GENERAL CONDITIONS

ALL STRUCTURAL DRAWINGS SHALL BE USED IN CONJUNCTION WITH THE MECHANICAL, CIVIL, ELECTRICAL AND SHOP DRAWINGS AND SPECIFICATIONS.

THE CONTRACTOR SHALL REVIEW AND VERIFY DIMENSIONS SHOWN IN ALL PLANS AND REVIEW ALL FIELD CONDITIONS THAT MAY AFFECT THE INSTALLATION OF THE FACILITY. SHOULD DISCREPANCIES APPEAR, THE CONTRACTOR SHALL NOTIFY THE ENGINEER IN WRITING TO OBTAIN ENGINEER'S CLARIFICATION BEFORE COMMENCING WITH THE WORK.

FOR ALL ITEMS EMBEDDED IN OR PASSED THROUGH CONCRETE, THE CONTRACTOR SHALL INITIALLY REFER TO MECHANICAL AND ELECTRICAL DRAWINGS FOR TYPE, SIZE, LOCATION AND SPECIAL INSTALLATION REQUIREMENTS FOR THESE ITEMS.

THE CONTRACTOR SHALL TAKE ANY AND ALL NECESSARY MEASURES TO PROTECT EXISTING STRUCTURES FROM DAMAGE WHEN WORKING IN AND AROUND EXISTING STRUCTURES PERFORMING WORK SUCH AS DEMOLITION, FOUNDATION EXCAVATION AND OTHER WORK.

SIZE AND LOCATION OF EQUIPMENT PADS AND ANCHOR BOLTS SHALL BE PER EQUIPMENT MANUFACTURER'S REQUIREMENTS AND APPROVED SUBMITTALS.

ANY EQUIPMENT THAT MAY INDUCE VIBRATION TO THE STRUCTURE SHALL BE ADEQUATELY ISOLATED FROM THE STRUCTURES.

ALL EXPOSED CORNERS OF CONCRETE SHALL HAVE A MINIMUM CHAMFER OF 3/4" UNLESS OTHERWISE NOTED.

THE CONTRACTOR SHALL OBTAIN ENGINEER'S APPROVAL FOR THE LOCATION OF CONSTRUCTION JOINTS THAT ARE NOT SHOWN ON THE DRAWINGS.

REINFORCING STEEL SHALL HAVE THE FOLLOWING CLEAR COVER UNLESS OTHERWISE NOTED:

| | |
|---|---|
| – CONCRETE CAST AGAINST EARTH | 3" |
| – FORMED SURFACES IN CONTACT WITH SOIL, SEWAGE, WATER OR EXPOSED TO WEATHER | 2" |
| – FORMED SURFACES NOT EXPOSED TO WEATHER OR IN CONTACT WITH SOIL: | |
| – SLABS AND WALLS | 2" |
| – BEAMS AND COLUMNS | 1 1/2" |

LAP SPLICES SHALL BE AS SHOWN ON THE DRAWINGS AND SPECIFIED. FOR LAP SPLICES NOT SHOWN ON THE DRAWINGS OR SPECIFIED, THE CONTRACTOR SHALL OBTAIN ENGINEER'S APPROVAL.

## FIRE RESISTANCE RATINGS

| STRUCTURAL ELEMENT | FBC TABLE 601 REQUIRED FIRE RESISTANCE (HOURS) | MINIMUM EQUIVALENT THICKNESS REQUIRED (INCHES) | EQUIVALENT THICKNESS PROVIDED (INCHES) |
|---|---|---|---|
| ROOF | 1 | – | – |
| EXTERIOR BEARING WALLS | 2 | 4.0 (FBC TABLE 720.1(2)) | – |
| EXTERIOR NON–BEARING WALLS | 2 | 4.0 (FBC TABLE 720.1(2)) | – |
| INTERIOR NON–BEARING WALLS | NC | – | – |
| INTERIOR BEARING WALLS | 1 | 2.7 (FBC TABLE 720.1(2)) | – |


ECKLER ENGINEERING, INC.
4700 RIVERSIDE DRIVE, SUITE 110 - CORAL SPRINGS, FL 33067
(954) 510-4700 - FAX (954) 755-2741
CA No. 7803


DSGN: D. K. HAMMANN
DR: R.PAEZ
CHK: D. K. HAMMANN
APVD: D. K. HAMMANN

VERIFY SCALE
1"
BAR IS ONE INCH ON ORIGINAL DRAWING. ADJUST SCALES AS NECESSARY.

| No. | DATE | REVISIONS | BY | APVD |
|---|---|---|---|---|

CONSULTANT

---
DOUGLAS K. HAMMANN, P.E.
FL # 50589

**VILLAGE OF PALM SPRINGS**

SCADA SYSTEM UPGRADE MAIN WATER TREATMENT PLANT (MAIN WTP)
2021B-003

DESIGN CRITERIA (SHEET 1)

DWG NO. 6 OF 70
SHEET G-05
PROJ. NO. 400-077.01
DATE AUGUST 26, 2020


File name: C:\Civil 3D Projects\400-077.01 - Scada System Upgrades Main and R. L. Pratt WTP\01_Working (Main)\400-077.01_G-02 MULTI.dwg; Plotted @: 1/6/2021 5:32:48 PM; Scale multiplier: 0.5; Printed by: Matheus Siqueira; Milestone: BID DOCUMENTS


BID DOCUMENTS

# DESIGN CRITERIA

## GENERAL

| | |
|---|---|
| – POPULATION SERVED | 40,000 |
| – DESIGN YEAR | 2020 |
| – DESIGN FLOWS, MGD | |
| AVERAGE ANNUAL, Q | 4.0 |
| MAXIMUM DAY, Q MAX DAY (DESIGN FLOW) | 6.0 |
| PEAK HOUR, Q PEAK (DEMAND FLOW) | 8.0 |
| – RAW WATER QUALITY, mg/l AS CaCO3 | |
| TOTAL HARDNESS | 278 |
| CALCIUM HARDNESS | 262 |
| MAGNESIUM HARDNESS | 16 |
| IRON (mg/l AS Fe) | 0.03 |
| CHLORIDE (mg/l) | 80 (AVG) |
| SODIUM (mg/l) | 30 (AVG) |
| SULFATE (mg/l) | 4.26 |
| BROMIDE (mg/l) | 0.15 |
| TOC (mg/l) | 12.0 |
| DOC (mg/l) | 12.0 |
| pH | 7.7 |
| COLOR (P+/Co) | 30 |
| – FINISHED WATER QUALITY, mg/l AS CaCO3 | |
| TOTAL HARDNESS | 100 |
| CALCIUM HARDNESS | 85 |
| MAGNESIUM HARDNESS | 15 |
| TOTAL TRIHALOMETHANES (ug/l) | 60 |
| HAA5'S (ug/l) | 40 |
| CHLORIDE (mg/l) | 150 |
| SODIUM (mg/l) | 60 |
| TOC (mg/l) | 0.5 TO 5.0 |
| pH | 9.0 |
| COLOR (P+/Co) | <10 |

## UP–1 INFLUENT RAW WATER

| | |
|---|---|
| – EXISTING OFF–SITE | |
| NUMBER | 9 |
| TOTAL CAPACITY, MGD | |

## UP–2 SOFTENING (LIME)

| | |
|---|---|
| – TREATMENT UNITS | |
| TYPE | CATYLACTOR |
| NUMBER | 3 |
| DIAMETER TOP (Ft) | 14 |
| HEIGHT (Ft) | 26.5 |
| CATALYST MEDIA | SILICA SAND |
| WEIR OVERFLOW RATE GPM/Ft | 43.5 |
| RISE RATE GPM/SF | 17.1 |

## UP–3 PRETREATMENT (MIEX SYSTEM)

| | |
|---|---|
| – MAGNETIC ION EXCHANGE SYSTEM (MIEX) | |
| DESIGN FLOW, MGD | 6.0 |
| RESIN CONCENTRATION, ml/L (MAX.) | 20 |
| REGENERATION RATE, % | 5 |
| CONTACT TIME, MINUTES (MAX.) | 20 |
| DESIGN RECYCLE FLOW, GPM | 360 |
| FRESH RESIN FEED RATE, GPM | 18 |
| AVG. SPENT REGENERANT, GPM | 7.50 |
| DESIGN REGENERATION FREQUENCY, HRS | 6 |
| REGENERATION DURATION, HRS | 4 |
| – TRANSFER PUMPS | |
| NUMBER | 3 |
| TYPE | SUBMERSIBLE |
| CAPACITY, GPM (EACH) | 1400 |
| – WASTE PUMPS | |
| NUMBER | 2 |
| TYPE | SUBMERSIBLE (GRINDER) |
| CAPACITY, GPM (EACH) | 48 |
| – RESIN STORAGE | |
| NUMBER OF LIQUISACKS | 6 |
| WEEKS AT QMAX | 9 |

## UP–4 DISINFECTION (NaOCl)

| | |
|---|---|
| – CHLORINATION | NaOCl (12%) |
| STORAGE CAPACITY, GALS. | 5402 |
| STORAGE CAPACITY AT Q AVG, DAYS | 9–18 |
| STORAGE CAPACITY AT Q MAX, DAYS | 5–12 |
| DOSAGE RATE, mg/l | 5–20.0 |
| – NaOCl FEED PUMPS | |
| IN SERVICE | 3 |
| STANDBY | 1 |
| TYPE | DIAPHRAM |
| CAPACITY, GPH (EACH) | 20.6 |
| – CONTACT BASIN | |
| VOLUME, GAL | 175,000 |
| CONTACT TIME @ Q MAX, MINUTES | 42 |
| FREEBOARD, FT. | 1 |

## UP–5 FILTRATION

| | |
|---|---|
| – NUMBER OF FILTER CELLS | 6 |
| – CONTROL | INF. WEIR FLOW SPLIT |
| – FILTER TYPE | DUAL MEDIA, CONS. RATE |
| – BACKWASH TYPE | AIR/WATER |
| – BACKWASH RATES | |
| CONCURRENT, | |
| AIR, SCFM/SF | 5.00 |
| WATER GPM/SF | 5.00 |
| WATER ONLY GPM/SF | 20.00 |
| – FILTER CELL DIMENSIONS | 10'–0"x20'–0" |
| – TOTAL FILTER AREA, SF | 1200 |
| – FILTRATION RATES | |
| DESIGN, GPM/SF | 3.50 |
| MAXIMUM, GPM/SF | 4.17 |
| – FILTRATION RATES | |
| DESIGN, GPM/SF | 3.50 |
| MAXIMUM, GPM/SF | 4.17 |
| – BACKWASH PUMPS | |
| NUMBER | 2 |
| TYPE | VERTICAL TURBINE |
| CAPACITY, GPM (EACH) | 4000 |
| – BACKWASH BLOWERS | |
| NUMBER | 2 |
| TYPE | POSITIVE DISPLACEMENT |
| CAPACITY, SCFM (EACH) | 1000 |

## UP–6 CHEMICAL FEED SYSTEMS

| | |
|---|---|
| – AMMONIATION (EXISTING) | |
| STORAGE TANKS – NUMBER | 1 |
| STORAGE TANK CAPACITY, LBS. | 4000 |
| DOSAGE RATE, MG/L | 2.0 |
| STORAGE CAPACITY AT Q MAX, DAYS | 40 |
| POST–FILTER AMMONIATORS | |
| NUMBER | 2 |
| CAPACITY, LB/DAY (EACH) | 100 |
| – POLYPHOSPHATE | |
| MIXING TANKS, NUMBER | 2 |
| MIXING TANKS CAPACITY, GAL (EACH) | 100 |
| DOSAGE RATE, MG/L | 1.1 |
| FEED PUMPS | |
| NUMBER | 3 |
| TYPE | VARIABLE SPEED DIAPHRAGM |
| CAPACITY, GPD (EACH) | 44 |

## UP–7 WASHWATER RECOVERY

| | |
|---|---|
| – WASHWATER RECOVERY BASIN | |
| VOLUME, GALLONS | 288,673 |
| DETENTION TIME, HOURS | 13.8 |
| – WASHWATER RECOVERY PUMPS | |
| NUMBER | 2 |
| TYPE | SUBMERSIBLE |
| CAPACITY, GPM (EACH) | 350 |
| – LIME SLUDGE PUMPS | |
| NUMBER | 2 |
| TYPE | SUBMERSIBLE |
| CAPACITY, GPM (EACH) | 150 |

## UP–8 LIME PREPARATION/FEED

| | |
|---|---|
| – LIME STORAGE | |
| LIME TYPE | 90% CaO |
| STORAGE SILO CAPACITY, TONS | 100 |
| STORAGE CAPACITY AT Q MAX, DAYS | 15–20 |
| DOSAGE RATE, MG/L | 100–270 |
| – LIME SLAKERS | |
| NUMBER | 2 |
| CAPACITY, LB/HR (EACH) | 1000 |
| WATER REQUIREMENT, GPM (EACH) | 15–25 |
| SLURRY CONCENTRATION, PERCENT | 10–20 |
| – LIME SLURRY PUMPS | |
| NUMBER | 4 |
| TYPE | CENTRIFUGAL |
| CAPACITY, GPM (EACH) | 50 |

## UP–9 FINISHED WATER (STORAGE & HIGH SERVICE PUMPING)

| | |
|---|---|
| – EXISTING STORAGE CAPACITY, MG | |
| GROUND STORAGE TANKS, MG | 1.50 |
| TOTAL EXISTING STORAGE, MG | 1.50 |
| – EXISTING HIGH SERVICE PUMPS | |
| NUMBER | 2 |
| TYPE | VERTICAL TURBINE |
| CAPACITY, GPM (EACH) | 2500 |
| – NEW HIGH SERVICE PUMPS | |
| NUMBER | 3 |
| TYPE | VERTICAL TURBINE |
| CAPACITY, GPM (EACH) | 2500 |
| – TOTAL HIGH SERVICE PUMP CAPACITY, GPM | 12500 |


**ECKLER ENGINEERING, INC.**
4700 RIVERSIDE DRIVE, SUITE 110 - CORAL SPRINGS, FL 33067
(954) 510-4700 - FAX (954) 755-2741
CA No. 7803


DSGN: D. K. HAMMANN
DR: R.PAEZ
CHK: D. K. HAMMANN
APVD: D. K. HAMMANN

VERIFY SCALE
1"
BAR IS ONE INCH ON ORIGINAL DRAWING. ADJUST SCALES AS NECESSARY.

| No. | DATE | REVISIONS | BY | APVD |
|---|---|---|---|---|

CONSULTANT

---
DOUGLAS K, HAMMANN, P.E.
FL # 50589

**VILLAGE OF PALM SPRINGS**
SCADA SYSTEM UPGRADE MAIN WATER TREATMENT PLANT (MAIN WTP)
2021B-003

DESIGN CRITERIA (SHEET 2)

DWG NO. 7 | SHEET G-06
OF 70 | PROJ. NO. 400-077.01
DATE AUGUST 26, 2020


File name: C:\Civil 3D Projects\400-077.01 - Scada System Upgrades Main and R. L. Pratt WTP\01_Working (Main)\400-077.01_G-02 MULTI.dwg; Plotted @: 12/23/2020 1:28:01 PM; Scale multiplier: 0.5; Printed by: Matheus Siqueira; Milestone: BID DOCUMENTS


BID DOCUMENTS

# SEQUENCE OF CONSTRUCTION

## GENERAL PROJECT REQUIREMENTS

1. CONTRACTOR SHALL COMPLETE THOROUGH REVIEW OF PROJECT SITE, PROJECT REQUIREMENTS, DRAWINGS AND SPECIFICATIONS TO PREPARE AND SUBMIT A DETAILED SEQUENCE OF CONSTRUCTION AND COORDINATION SUBMITTAL. THIS SUBMITTAL SHALL BE MADE IN ACCORDANCE WITH SECTION 01300 – SUBMITTALS AND COORDINATED WITH THE CONTRACTOR'S OVERALL PROJECT SCHEDULE. THE CONSTRUCTION SEQUENCING AND COORDINATION SUBMITTAL SHALL BE REVIEWED AND APPROVED BY ENGINEER AND OWNER PRIOR TO PROGRESSION OF WORK ON SITE THAT IMPACTS EXISTING REGENERATION SYSTEM OPERATIONS.

## SCADA SYSTEM IMPROVEMENTS

**GENERAL PROJECT CONSIDERATIONS**

WORK ASSOCIATED WITH THIS PROJECT MUST NOT ADVERSELY IMPACT WATER TREATMENT PLANT OPERATIONS BEYOND THE TIME FRAMES SPECIFIED. AS A RESULT, CONTRACTOR MUST COORDINATE WORK AND CONNECTIONS TO THE EXISTING SYSTEM COMPONENTS TO MEET THE FOLLOWING CONDITIONS:

1. EXISTING TREATMENT FACILITY SHALL REMAIN IN OPERATION AT ALL TIMES AS FOLLOWS:
   - MINIMUM CONTINUOUS SOFTENING CAPACITY = 4.0 MGD (2 UNITS)
   - MINIMUM CONTINUOUS FILTRATION CAPACITY = 4.0 MGD (2 FILTER BAYS)
   - MINIMUM CONTINUOUS MIEX CAPACITY = 4.0 MGD
   - MINIMUM CONTINUOUS HIGH SERVICE PUMPING CAPACITY = 10.0 MGD (3 PUMPS)
2. EXISTING SANITARY PUMP STATIONS AND POTABLE WATER WELLS SCADA SHALL REMAIN IN OPERATION AT ALL TIMES.
3. EXISTING CONTROL SYSTEMS SHALL REMAIN IN SERVICE UNTIL PROPOSED SYSTEMS ARE FULLY OPERATIONAL.
4. SHORT TERM COMPLETE FACILITY OR SPECIFIC PROCESS/PANEL SHUTDOWN (NO ELECTRIC POWER) SHALL BE ALLOWED IN ACCORDANCE WITH THE FOLLOWING REQUIREMENTS:
   - DURATION SHALL NOT EXCEED 3 HOURS.
   - SHUTDOWNS MUST BE SCHEDULED BETWEEN THE HOURS OF 9:00 AM AND 12:00 NOON OR 1:00 PM TO 4:00 PM.
   - PROVIDE OWNER MINIMUM COORDINATION NOTICE OF 48 HOURS.

**SUGGESTED SEQUENCE OF CONSTRUCTION**

1. CONTRACTOR SHALL HAVE THE FREEDOM TO PERFORM CONSTRUCTION AND DEMOLITION IN ANY FASHION AND IN ANY ORDER CONTRACTOR SEES FIT AS LONG AS THE PERFORMANCE OF THE CONTRACT MEETS OR EXCEEDS THE ABOVE GENERAL PROJECT CONSIDERATIONS.
2. COMPLETE SHOP DRAWING PHASE, PROCUREMENT AND DELIVERY (OR HAVE DELIVERY SCHEDULED) FOR ALL MAJOR PIECES OF EQUIPMENT ASSOCIATED WITH THE SCADA SYSTEM UPGRADE.
3. COORDINATE WITH OWNER AND ENGINEER AND PROVIDE PRELIMINARY SCHEDULE OF SYSTEM SHUTDOWN(S) NEEDED TO COMPLETE THE WORK.
4. ALL MATERIAL SHALL BE ON-SITE PRIOR TO SYSTEM SHUTDOWN(S) AND DEMOLITION.
5. COMPLETE ALL WORK THAT IS POSSIBLE BEFORE SHUTDOWN(S) OF THE EXISTING SYSTEMS.
6. REMOVE ALL EXISTING EQUIPMENT, AND ELECTRICAL SYSTEMS AS INDICATED BY DRAWINGS.
7. INSTALL ALL NEW EQUIPMENT, AND ELECTRICAL SYSTEMS.
8. COMPLETE ALL SYSTEM MANUFACTURER, CONFIGURATION, STARTUP AND TRAINING.
9. PLACE ALL NEW SYSTEMS INTO OPERATION.
10. SEQUENCE OF CONSTRUCTION NOTES ARE NOT MEANT TO COVER ALL ASPECTS OF THE DEMOLITION AND CONSTRUCTION PROCESS.


**ECKLER ENGINEERING, INC.**
4700 RIVERSIDE DRIVE, SUITE 110 - CORAL SPRINGS, FL 33067
(954) 510-4700 - FAX (954) 755-2741
CA No. 7803


DSGN: D. K. HAMMANN
DR: R.PAEZ
CHK: D. K. HAMMANN
APVD: D. K. HAMMANN

VERIFY SCALE
1"
BAR IS ONE INCH ON ORIGINAL DRAWING. ADJUST SCALES AS NECESSARY.

| No. | DATE | REVISIONS | BY | APVD |
|---|---|---|---|---|

CONSULTANT

----
DOUGLAS K. HAMMANN, P.E.
FL # 50589

**VILLAGE OF PALM SPRINGS**

SCADA SYSTEM UPGRADE MAIN WATER TREATMENT PLANT (MAIN WTP)
2021B-003

SEQUENCE OF CONSTRUCTION AND COORDINATION

DWG NO. 8 | SHEET G-07
OF 70 | PROJ. NO. 400-077.01
DATE AUGUST 26, 2020


File name: C:\Civil 3D Projects\400-077.01 - Scada System Upgrades Main and R. L. Pratt WTP\01_Working (Main)\400-077.01_G-02 MULTI.dwg; Plotted @: 12/23/2020 1:28:03 PM; Scale multiplier: 0.5; Printed by: Matheus Siqueira; Milestone: BID DOCUMENTS


BID DOCUMENTS

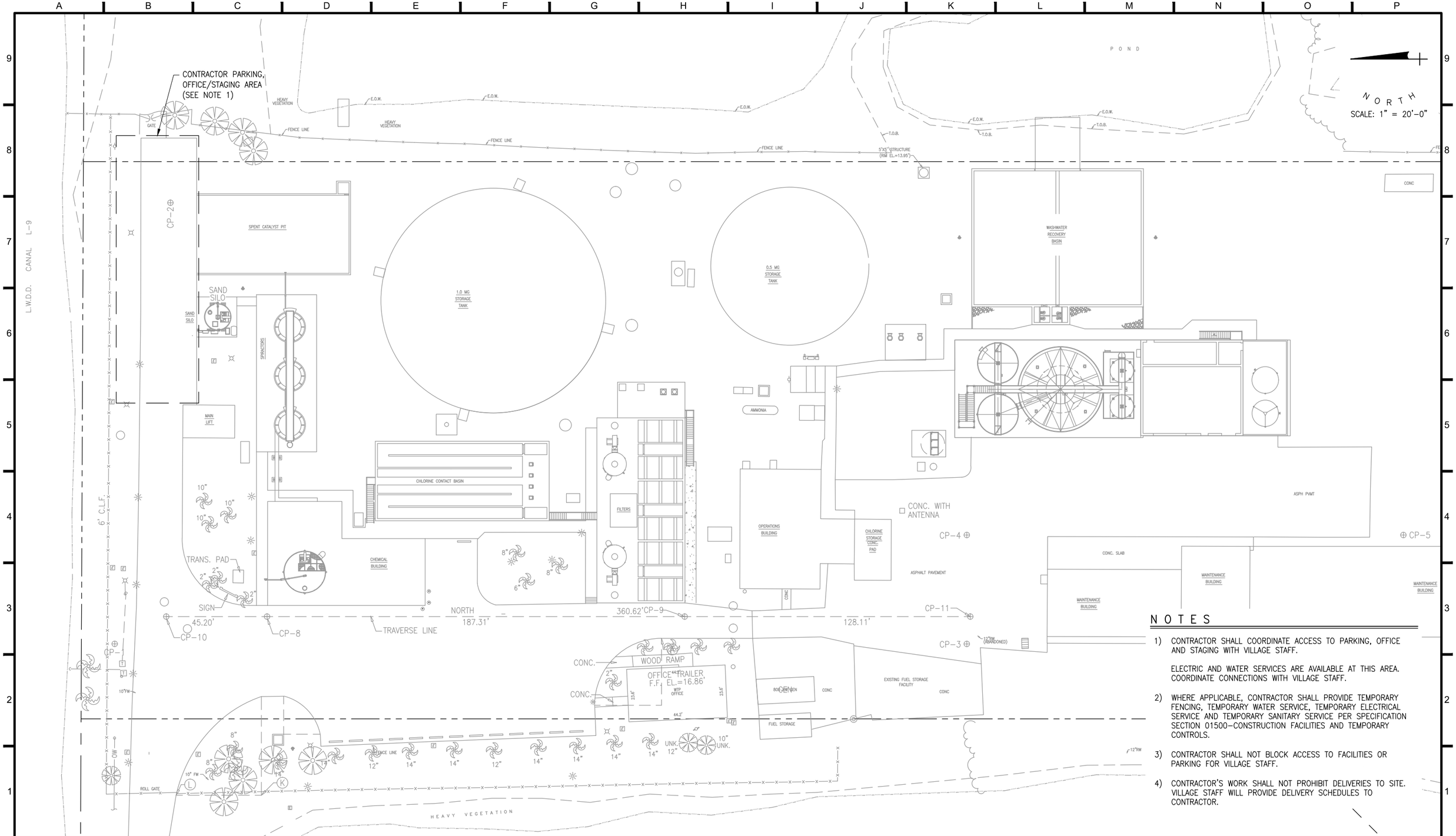


## NOTES

1) CONTRACTOR SHALL COORDINATE ACCESS TO PARKING, OFFICE AND STAGING WITH VILLAGE STAFF.

   ELECTRIC AND WATER SERVICES ARE AVAILABLE AT THIS AREA. COORDINATE CONNECTIONS WITH VILLAGE STAFF.

2) WHERE APPLICABLE, CONTRACTOR SHALL PROVIDE TEMPORARY FENCING, TEMPORARY WATER SERVICE, TEMPORARY ELECTRICAL SERVICE AND TEMPORARY SANITARY SERVICE PER SPECIFICATION SECTION 01500–CONSTRUCTION FACILITIES AND TEMPORARY CONTROLS.

3) CONTRACTOR SHALL NOT BLOCK ACCESS TO FACILITIES OR PARKING FOR VILLAGE STAFF.

4) CONTRACTOR'S WORK SHALL NOT PROHIBIT DELIVERIES TO SITE. VILLAGE STAFF WILL PROVIDE DELIVERY SCHEDULES TO CONTRACTOR.

**ECKLER ENGINEERING, INC.**
4700 RIVERSIDE DRIVE, SUITE 110 - CORAL SPRINGS, FL 33067
(954) 510-4700 - FAX (954) 755-2741
CA No. 7803

DSGN: D. K. HAMMANN
DR: R.PAEZ
CHK: D. K. HAMMANN
APVD: D. K. HAMMANN

VERIFY SCALE
1"
BAR IS ONE INCH ON ORIGINAL DRAWING. ADJUST SCALES AS NECESSARY.

| No. | DATE | REVISIONS | BY | APVD |
|---|---|---|---|---|

CONSULTANT

---
DOUGLAS K. HAMMANN, P.E.
FL # 50589

**VILLAGE OF PALM SPRINGS**

SCADA SYSTEM UPGRADE MAIN WATER TREATMENT PLANT (MAIN WTP)
2021B-003

OVERALL SITE PLAN

DWG NO. 9 | SHEET C-01
OF 70 | PROJ. NO. 400-077.01
DATE AUGUST 26, 2020

File name: C:\Civil 3D Projects\400-077.01 - Scada System Upgrades Main and R. L. Pratt WTP\01_Working (Main)\400-077.01_C-01-MULTI.dwg; Plotted @: 12/23/2020 1:28:09 PM; Scale multiplier: 0.5; Printed by: Matheus Siqueira; Milestone: BID DOCUMENTS

BID DOCUMENTS

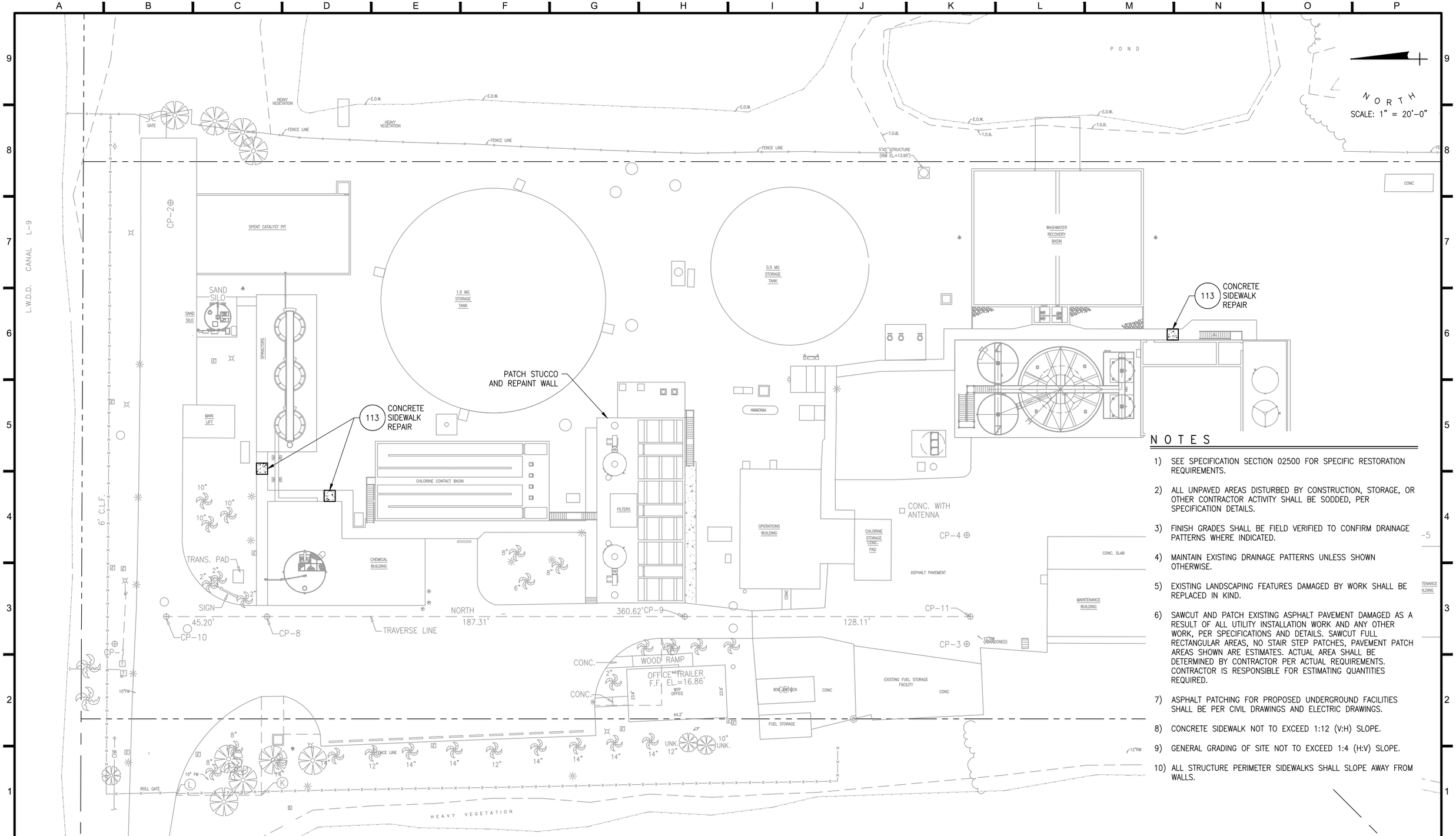


## NOTES

1) SEE SPECIFICATION SECTION 02500 FOR SPECIFIC RESTORATION REQUIREMENTS.
2) ALL UNPAVED AREAS DISTURBED BY CONSTRUCTION, STORAGE, OR OTHER CONTRACTOR ACTIVITY SHALL BE SODDED, PER SPECIFICATION DETAILS.
3) FINISH GRADES SHALL BE FIELD VERIFIED TO CONFIRM DRAINAGE PATTERNS WHERE INDICATED.
4) MAINTAIN EXISTING DRAINAGE PATTERNS UNLESS SHOWN OTHERWISE.
5) EXISTING LANDSCAPING FEATURES DAMAGED BY WORK SHALL BE REPLACED IN KIND.
6) SAWCUT AND PATCH EXISTING ASPHALT PAVEMENT DAMAGED AS A RESULT OF ALL UTILITY INSTALLATION WORK AND ANY OTHER WORK, PER SPECIFICATIONS AND DETAILS. SAWCUT FULL RECTANGULAR AREAS, NO STAIR STEP PATCHES, PAVEMENT PATCH AREAS SHOWN ARE ESTIMATES. ACTUAL AREA SHALL BE DETERMINED BY CONTRACTOR PER ACTUAL REQUIREMENTS. CONTRACTOR IS RESPONSIBLE FOR ESTIMATING QUANTITIES REQUIRED.
7) ASPHALT PATCHING FOR PROPOSED UNDERGROUND FACILITIES SHALL BE PER CIVIL DRAWINGS AND ELECTRIC DRAWINGS.
8) CONCRETE SIDEWALK NOT TO EXCEED 1:12 (V:H) SLOPE.
9) GENERAL GRADING OF SITE NOT TO EXCEED 1:4 (H:V) SLOPE.
10) ALL STRUCTURE PERIMETER SIDEWALKS SHALL SLOPE AWAY FROM WALLS.


**ECKLER ENGINEERING, INC.**
4700 RIVERSIDE DRIVE, SUITE 110 - CORAL SPRINGS, FL 33067
(954) 510-4700 - FAX (954) 755-2741
CA No. 7803


| | |
|---|---|
| DSGN: | D. K. HAMMANN |
| DR: | R.PAEZ |
| CHK: | D. K. HAMMANN |
| APVD: | D. K. HAMMANN |

VERIFY SCALE — 1" — BAR IS ONE INCH ON ORIGINAL DRAWING. ADJUST SCALES AS NECESSARY.

| No. | DATE | REVISIONS | BY | APVD |
|---|---|---|---|---|

CONSULTANT

---
DOUGLAS K. HAMMANN, P.E.
FL # 50589

**VILLAGE OF PALM SPRINGS**

SCADA SYSTEM UPGRADE MAIN WATER TREATMENT PLANT (MAIN WTP)
2021B-003

SITE RESTORATION PLAN

| | |
|---|---|
| DWG NO. | 10 |
| OF | 70 |
| SHEET | C-02 |
| PROJ. NO. | 400-077.01 |
| DATE | AUGUST 26, 2020 |


File name: C:\Civil 3D Projects\400-077.01 - Scada System Upgrades Main and R. L. Pratt WTP\01_Working (Main)\400-077.01_C-01-MULTI.dwg; Plotted @: 12/23/2020 1:28:12 PM; Scale multiplier: 0.5; Printed by: Matheus Siqueira; Milestone: BID DOCUMENTS


BID DOCUMENTS

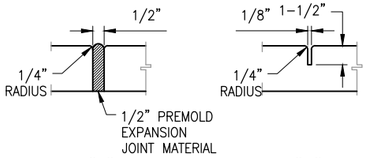


TYPE "A" JOINT




TYPE "B" JOINT

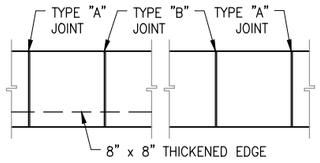


PLAN

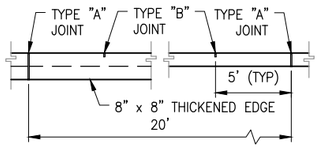


ELEVATION

NOTES:

1) TYPE "A" JOINTS SHALL BE USED ON SIDEWALKS @ 20' CENTERS & ON P.C. AND P.T. OF CURVES.
2) TYPE "A" JOINTS SHALL BE USED AT JUNCTIONS OF EXIST AND NEW SIDEWALKS AND WHERE SIDEWALK ABUTS CONC CURBS, DRIVEWAYS AND SIMILAR STRUCTURES.
3) TYPE "B" JOINTS SHALL BE USED ON SIDEWALKS @ 5' CENTERS.
4) SIDEWALKS SHALL BE 4" THICK EXCEPT AT DRIVEWAYS WHERE THE THICKNESS SHALL BE 6".
5) SIDEWALKS WIDTH SHALL BE AS INDICATED ON DRAWINGS.
6) WHERE EXIST SIDEWALK IS DISTURBED / DAMAGED BY WORK, RESTORATION LIMITS SHALL BE FULL SIDEWALK WIDTH TO FIRST JOINT EITHER SIDE OF DISTURBED / DAMAGED AREA.

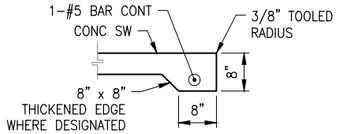


THICKENED EDGE

113

## CONCRETE SIDEWALK

NOTES:

1) CONCRETE SHALL BE 3,000 PSI AS SPECIFIED IN SECTION 02630-CONCRETE SIDEWALKS, DRIVES AND CURBS.

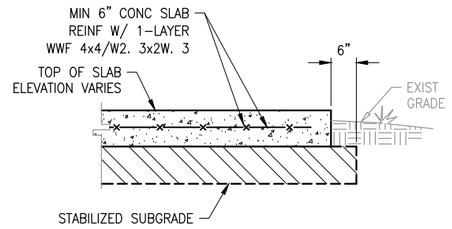


114

## CONCRETE SLAB DETAIL

NOTES:

1) CONCRETE SHALL BE 4,000 PSI MIX AS SPECIFIED IN SECTION 03300-CONCRETE.
2) PAVEMENT SHALL BE CONSTRUCTED TO THE ELEVATIONS AND GRADES SHOWN ON THE DRAWINGS.
3) FINISH SHALL BE TYPE S-4 AS SPECIFIED IN SECTION 03300-CONCRETE.
4) PROVIDE EQUALLY SPACED CONTRACTION JOINTS @ 25' MAXIMUM SPACING.
5) THICKENED EDGES SHALL BE PROVIDED AT LOCATIONS SHOWN ON DRAWINGS.
6) PROVIDE PREMOLDED JOINT FILLER AT ALL PAVEMENT OBSTRUCTIONS AND AT ALL LOCATIONS THAT PAVEMENT ABUTS STRUCTURES, SIDEWALKS OR OTHER PAVEMENTS. PREMOLDED JOINT FILLER SHALL BE AS SPECIFIED IN SECTION 03251.

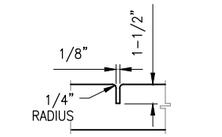


CONSTRUCTION JOINT

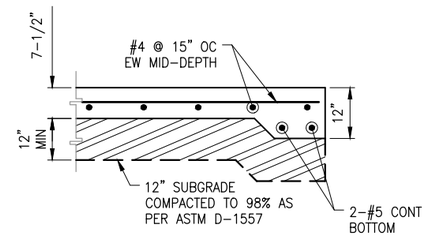


THICKENED EDGE

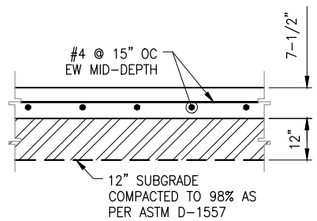


TYPICAL SECTION

116

## CONCRETE PAVING


**ECKLER ENGINEERING, INC.**
4700 RIVERSIDE DRIVE, SUITE 110 - CORAL SPRINGS, FL 33067
(954) 510-4700 - FAX (954) 755-2741
CA No. 7803


| | |
|---|---|
| DSGN: | D. K. HAMMANN |
| DR: | R.PAEZ |
| CHK: | D. K. HAMMANN |
| APVD: | D. K. HAMMANN |

VERIFY SCALE
1"
BAR IS ONE INCH ON ORIGINAL DRAWING. ADJUST SCALES AS NECESSARY.

| No. | DATE | REVISIONS | BY | APVD |
|---|---|---|---|---|

CONSULTANT

---
DOUGLAS K. HAMMANN, P.E.
FL # 50589

**VILLAGE OF PALM SPRINGS**

SCADA SYSTEM UPGRADE MAIN WATER TREATMENT PLANT (MAIN WTP)
2021B-003

STANDARD DETAILS - CIVIL

DWG NO. 11 | SHEET CD-01
OF 70 | PROJ. NO. 400-077.01
DATE AUGUST 26, 2020


File name: C:\Civil 3D Projects\400-077.01 - Scada System Upgrades Main and R. L. Pratt WTP\01_Working (Main)\400-077.01_CD-00.dwg; Plotted @: 12/23/2020 1:28:17 PM; Scale multiplier: 0.5; Printed by: Matheus Siqueira; Milestone: BID DOCUMENTS


BID DOCUMENTS

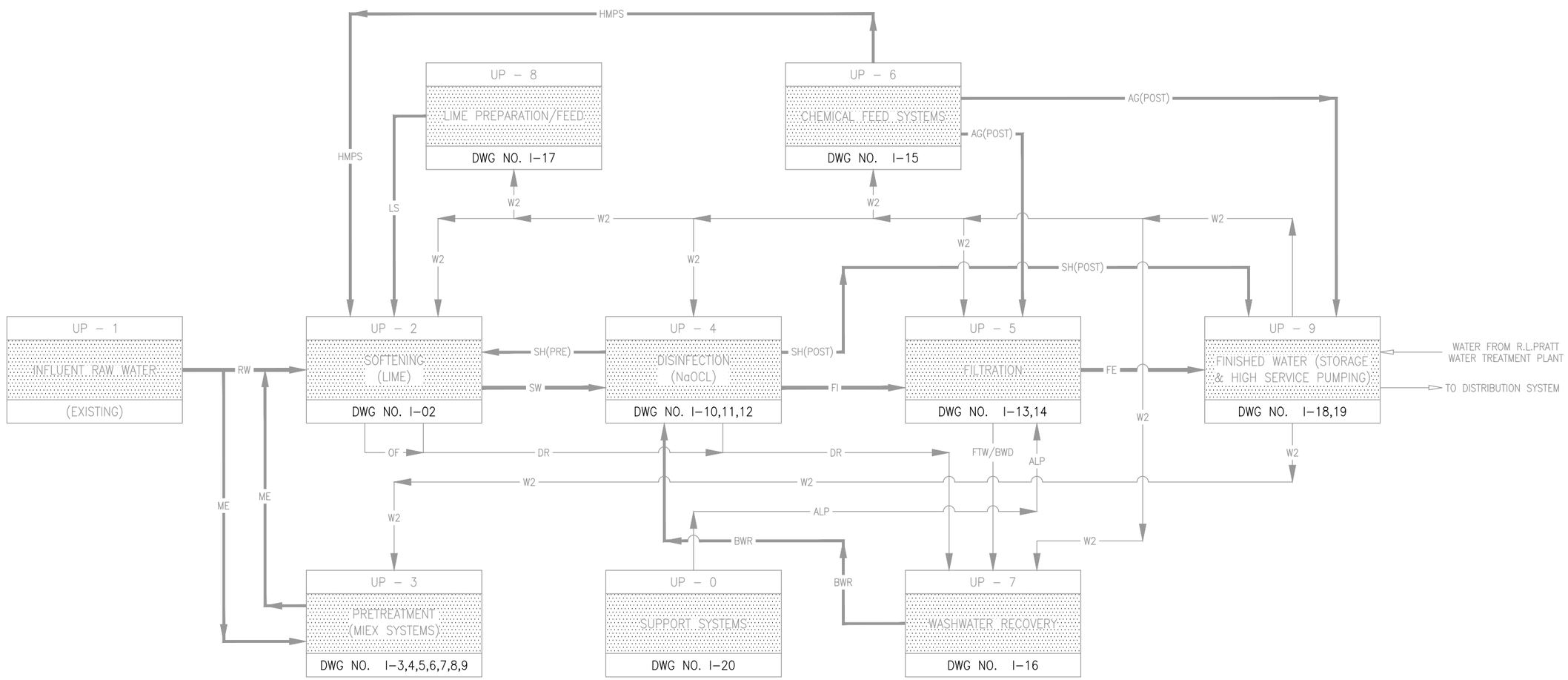



**ECKLER ENGINEERING, INC.**
4700 RIVERSIDE DRIVE, SUITE 110 - CORAL SPRINGS, FL 33067
(954) 510-4700 - FAX (954) 755-2741
CA No. 7803


DSGN: D. K. HAMMANN
DR: R.PAEZ
CHK: D. K. HAMMANN
APVD: D. K. HAMMANN

VERIFY SCALE
1"
BAR IS ONE INCH ON ORIGINAL DRAWING. ADJUST SCALES AS NECESSARY.

| No. | DATE | REVISIONS | BY | APVD |
|---|---|---|---|---|

CONSULTANT

---
DOUGLAS K. HAMMANN, P.E.
FL # 50589

**VILLAGE OF PALM SPRINGS**

SCADA SYSTEM UPGRADE MAIN WATER TREATMENT PLANT (MAIN WTP)
2021B-003

OVERALL PLANT SCHEMATIC

DWG NO. 12 OF 70
SHEET I-01
PROJ. NO. 400-077.01
DATE AUGUST 26, 2020


File name: C:\Civil 3D Projects\400-077.01 - Scada System Upgrades Main and R. L. Pratt WTP\01_Working (Main)\400-077.01_I-01-MULTI.dwg; Plotted @: 12/23/2020 1:28:24 PM; Scale multiplier: 0.5; Printed by: Matheus Siqueira; Milestone: BID DOCUMENTS


BID DOCUMENTS

## NOTES

1. REUSE EXISTING CONDUITS, PROVIDE NEW ETHERNET CABLES FOR FUTURE VALVE CONTROL AND STATUS.
2. EXISTING FP-2-1 LOCATED IN CHEMICAL BUILDING.

SCADA HMI NETWORK

FI 2-2-1 — INFLUENT FLOW (GPM)
FIQ — TOTAL FLOW CURRENT DAY X1000 GALLONS
FIQ — TOTAL FLOW PREVIOUS DAY X1000 GALLONS
FI 2-2-2 — INFLUENT FLOW (GPM)
FIQ — TOTAL FLOW CURRENT DAY X1000 GALLONS
FIQ — TOTAL FLOW PREVIOUS DAY X1000 GALLONS
FI 2-2-3 — INFLUENT FLOW (GPM)
FIQ — TOTAL FLOW CURRENT DAY X1000 GALLONS
FIQ — TOTAL FLOW PREVIOUS DAY X1000 GALLONS
FI 2 — TOTAL WTP INFLUENT FLOW (GPM)
FIQ — TOTAL FLOW CURRENT DAY X1000 GALLONS
FIQ — TOTAL FLOW PREVIOUS DAY X1000 GALLONS
HS 2-1-(3) — FCV-2-1-(3) OPEN/CLOSE/HOLD
ZL 2-1-(3) — FCV-2-1-(3) OPEN/CLOSE/STATUS
ZL 2-1-(3)
XA 2-1-(3) — FCV-2-1-(3) FAULT

NETWORK: EN → EH → EN → M | F/O → F/O → CTU
NETWORK: F/O → NETWORK

FIELD

FQI 2-1-1, FIR 2-1-1, FIR 2-1-2, FQI 2-1-2, FIR 2-1-3, FQI 2-1-3, FY 2-1, SUM, FIR 2-1, FQI 2-1, TOTAL — MCP / FIELD

RUN PLANT IN "AUTO" IF ANY CHECK VALVE "OPEN" AND "AUTO" PLANT OPERATION SELECTED
AND — HS 2-1 LA — OR
QL 2-1 AUTO
- "AUTO" TO UP-4, DISINFECTION
- "AUTO" TO UP-5, FILTRATION
- "AUTO" TO UP-6, CHEMICAL FEED SYSTEMS
- "AUTO" TO UP-8, LIME PREPARATION/FEED

EXTEND EXIST RAW WATER FLOW METER(S) SIGNALS TO PLC

REMOTE I/O-MCP: PLC-MCP — EN — M | F/O — COMPUTER BASED OI

EN2, EN3, EN4

MODBUS TCP/IP (TYP OF 3)

FP-2-1 (2) — 120V — J — EN — J BOX — 120V — EN

FFIC 2-1-1, FFIC 2-1-2, FFIC 2-1-3

ARV-2-1-1 — OPEN ZS 2-1-1 — FCV 2-1-1 — FE 2-1-1 — FIT 2-1-1 — RW — T-2-2-1 SOFTENING UNIT 1 — DR — OF — SSL — HMPS — 6A, I-15 — CS — 4A, I-3 — M-2-2-1 — SW — LS — ALTERNATE INJECTION POINT — LS — 8A, I-17 — SC — DR — SSL — HMPS — 6B, I-15 — CS — 4B, I-3

ARV-2-1-2 — OPEN ZS 2-1-2 — FCV 2-1-2 — FE 2-1-2 — FIT 2-1-2 — RW — T-2-2-2 SOFTENING UNIT 2 — M-2-2-2 — SW — 2A, I-10 — LS — ALTERNATE INJECTION POINT — LS — 8B, I-17 — SC — T-2-3-1 SPENT CATALYST PIT — DR — 2B, I-16

9A, I-10 — W2

FROM EAST WELLFIELD — RW

ARV-2-1-3 — OPEN ZS 2-1-3 — FCV 2-1-3 — FE 2-1-3 — FIT 2-1-3 — RW — T-2-2-3 SOFTENING UNIT 3 — M-2-2-3 — SW — LS — ALTERNATE INJECTION POINT — LS — 8C, I-17 — SC — DR — TO LAKE

SW — 2A, I-10 — 2B, I-16 — TO LAKE

FIELD

** M-2-4-1A EXHAUST FAN — M
BAG HOUSE FILTER — M
** M-2-4-1B MECHANICAL SHAKER
T-2-4-1 SAND STORAGE SILO
FP-2-4-2** — SSL — FROM SAND DELIVERY TRUCK
ROTARY INLET VALVE — K — P — HPA
LT — PS — HPA — AIR MANG. PANEL — AIR DRYER
PNEUMATIC SAND CONVEYENCE VESSEL
AIR COMPRESSOR
9B, I-10

208V 3Ø — HS 2-4-1A — HS 2-4-1B — HO — MS 2-4-1A — MS 2-4-1B — QL 2-4-1A — QL 2-4-1B — ON — FP-2-4-1

| | | | |
|---|---|---|---|
| **ECKLER ENGINEERING, INC.**<br>4700 RIVERSIDE DRIVE, SUITE 110 - CORAL SPRINGS, FL 33067<br>(954) 510-4700 - FAX (954) 755-2741<br>CA No. 7803 | DSGN: D. K. HAMMANN<br>DR: R.PAEZ<br>CHK: D. K. HAMMANN<br>APVD: D. K. HAMMANN | VERIFY SCALE<br>1"<br>BAR IS ONE INCH ON ORIGINAL DRAWING. ADJUST SCALES AS NECESSARY. | No. / DATE / REVISIONS / BY / APVD<br>CONSULTANT: ---- DOUGLAS K. HAMMANN, P.E. FL # 50589 |

**VILLAGE OF PALM SPRINGS**
SCADA SYSTEM UPGRADE MAIN WATER TREATMENT PLANT (MAIN WTP)
2021B-003

UNIT PROCESS 2 - SOFTENING (LIME)

DWG NO. 13 | SHEET I-02
OF 70 | PROJ. NO. 400-077.01
DATE AUGUST 26, 2020

File name: C:\Civil 3D Projects\400-077.01 - Scada System Upgrades Main and R. L. Pratt WTP\01_Working (Main)\400-077.01_I-01-MULTI.dwg; Plotted @: 12/23/2020 1:28:26 PM; Scale multiplier: 0.5; Printed by: Matheus Siqueira; Milestone: BID DOCUMENTS

BID DOCUMENTS

FUTURE

SCADA HMI NETWORK

EN — EH — EN — M | F/O — F/O — CTU

NETWORK FIELD

ANNUNCIATOR IS EXISTING COORDINATE WINDOW AVAILABILITY IN FIELD (TYP.)

XA 3-1-1

"COMMON FAIL MIEX SYSTEM"

CR 20

EXISTING RUN WELLS RELAY (STOP ANY RAW WATER SUPPLY WELL IN AUTO)

HIGH LEVEL T-3-3-1

MCP

F/O — EXISTING FIBER PORT — F/O — THIS FIBER CONNECTION TO BE INSTALLED AND READY FOR MIEX ACP (FUTURE) BY OTHERS

MIEX ACP (FUTURE)

FOR ALL MIEX SYSTEM REQUIREMENTS (SEE E-06 FOR LOCATION)

MIEX ACP (INSTALLED BY OTHERS)

3H, I-06

HS START/STOP SC HS VFD — AIC — HS SC HS START/STOP VFD

MIEX ACP

SIGNAL IS MAIN START/STOP FOR ALL MIEX SYSTEM EQUIPMENT AND OPERATION

FIT 3-1-1 — TO MIEX ACP PLC

RECYCLED RESIN 3F, I-04 — 3" — REC

FRESH RESIN 3G, I-06 — 1-1/2" — FR

LT 3-1-1 — AE 3-1-1 — AT 3-1-1 — TSS

M-3-1-2

M-3-1-1

FE 3-1-1 — FCV 3-1-1

RAW WATER UP-1 — 20" — MI

FROM EXIST WATER SUPPLY WELLS — 120V

SA — SAMPLE (TYP 2 PLCS)

NC V1001/V1002

SETTLER T-3-1-3 FEEDWELL

B-1 B-2 B-3 B-4

20" — ME — MIEX TREATED WATER 3T, I-09

CONTACTOR 1 T-3-1-1 — CONTACTOR 2 T-3-1-2

DR — H

DR/RSR — DR — H

RSR

RECYCLED/SPENT RESIN 3D, I-08

RECYCLED/SPENT RESIN 3C, I-08

RECYCLED/SPENT RESIN 3C, I-08

RECYCLED/SPENT RESIN 3C, I-08

3" — RSR

| | | | | | | | | | |
|---|---|---|---|---|---|---|---|---|---|
| **ECKLER ENGINEERING, INC.**<br>4700 RIVERSIDE DRIVE, SUITE 110 - CORAL SPRINGS, FL 33067<br>(954) 510-4700 - FAX (954) 755-2741<br>CA No. 7803 | DSGN: D. K. HAMMANN<br>DR: R.PAEZ<br>CHK: D. K. HAMMANN<br>APVD: D. K. HAMMANN | VERIFY SCALE<br>1"<br>BAR IS ONE INCH ON ORIGINAL DRAWING. ADJUST SCALES AS NECESSARY. | No. | DATE | REVISIONS | BY | APVD | CONSULTANT | ----<br>DOUGLAS K. HAMMANN, P.E.<br>FL # 50589 |

**VILLAGE OF PALM SPRINGS**

SCADA SYSTEM UPGRADE MAIN WATER TREATMENT PLANT (MAIN WTP)
2021B-003

UNIT PROCESS 3 - PRETREATMENT (MIEX SYSTEM) MODIFICATIONS

DWG NO. 14 | SHEET I-03
OF 70 | PROJ. NO. 400-077.01
DATE AUGUST 26, 2020

BID DOCUMENTS

File name: C:\Civil 3D Projects\400-077.01 - Scada System Upgrades Main and R. L. Pratt WTP\01_Working (Main)\400-077.01_I-01-MULTI.dwg; Plotted @: 12/23/2020 1:28:28 PM; Scale multiplier: 0.5; Printed by: Matheus Siqueira; Milestone: BID DOCUMENTS

FUTURE

SCADA HMI NETWORK

EN — EH — EN — M | F/O — F/O — CTU

NETWORK FIELD

MIEX ACP

LSH, LSL, HS, SC, START/STOP, VFD

VIRGIN RESIN 3I, I-06 — 1" — VR

SPENT RESIN 3J, I-08 — 3" — SR

SPENT RESIN 3K, I-08 — 3" — SR

BRINE 3L, I-05 — 6" — BR

RINSE WATER 9J, I-18 — 4" — W2

V1101, V1102, V1103, V1104, V1105, V1106, V1107/V1108, V1109, V1110, V1111, V1112, V1113, V1114, V1115, V1116, V1117, V1118, V1119/V1120, V1121, V1122, V1123, V1124, V1125/V1129, V1126/V1130, V1127, V1128

AIR SUPPLY, FC, FO, NO, SAMPLE

M-3-2-1, M-3-2-2, LT 111, LE 111, LT 112, LE 112

T-3-2-1, T-3-2-2

8" OF STEEL BLANK

REC — RECYCLE RESIN 3F, I-03 — TO CONTACTORS TYP 2 PLACES

RD — REGENERANT DECANT 3K, I-05 — TO REGENERANT TANK

SD — SUPERNATANT DECANT 3M,I-09 — TO MIEX TRANSFER STATION (CURRENTLY NOT IN SERVICE)

AE 113, AT 113 — CONDUCTIVITY

RR — REGENERATED RESIN 3N, I-06 — TO FRESH RESIN TANK

SUPERNATANT/REGENERANT/RINSE WATER 30, I-05

REGENERATED RESIN 3P, I-06 — TO FRESH RESIN TANK

4X6, 3X6

| | | | | | | | | | | |
|---|---|---|---|---|---|---|---|---|---|---|
| **ECKLER ENGINEERING, INC.**<br>4700 RIVERSIDE DRIVE, SUITE 110 - CORAL SPRINGS, FL 33067<br>(954) 510-4700 - FAX (954) 755-2741<br>CA No. 7803 | DSGN: D. K. HAMMANN<br>DR: R.PAEZ<br>CHK: D. K. HAMMANN<br>APVD: D. K. HAMMANN | VERIFY SCALE<br>1"<br>BAR IS ONE INCH ON ORIGINAL DRAWING. ADJUST SCALES AS NECESSARY. | No. | DATE | REVISIONS | BY | APVD | CONSULTANT | ----<br>DOUGLAS K. HAMMANN, P.E.<br>FL # 50589 | **VILLAGE OF PALM SPRINGS**<br>SCADA SYSTEM UPGRADE MAIN WATER TREATMENT PLANT (MAIN WTP)<br>2021B-003 | UNIT PROCESS 3 - PRETREATMENT (MIEX SYSTEM) MODIFICATIONS | DWG NO. 15 OF 70<br>SHEET I-04<br>PROJ. NO. 400-077.01<br>DATE AUGUST 26, 2020 |

File name: C:\Civil 3D Projects\400-077.01 - Scada System Upgrades Main and R. L. Pratt WTP\01_Working (Main)\400-077.01_I-01-MULTI.dwg; Plotted @: 12/23/2020 1:28:30 PM; Scale multiplier: 0.5; Printed by: Matheus Siqueira; Milestone: BID DOCUMENTS

BID DOCUMENTS

FUTURE

SCADA HMI NETWORK

EN — EH — EN — M | F/O — F/O — CTU

NETWORK FIELD

MIEX ACP

HS — HS — LIC — HS (ON / OFF) — 3Q, I-07 MIEX ACP

SERVICE WATER 9K, I-18 — 4" — W2 — V1213

REGENERATION TANK DECANT 3K, I-04 — 6" — RD — V1216

SATURATED SALT SOLUTION 3P, I-07 — 2" — SSS

M-3-3-1

COMPRESSOR AND ACCESSORIES BY WESTECH

PS 3-3-1 — PSV — HS ON/OFF PS — ELECTRIC DRAIN VALVE — PG

1" — HPA — V1202 — V1206

SUPERNATANT/REGENERANT/RINSE WATER 30, I-04 REGENERATION TANKS — 3" — HPA — V1201

3 X 2 — V1203 — P-3-3-2A — V1207 — V1208 — V1209

V1205 — V1204 — P-3-3-2B SPARE — V1210 — V1211 — V1212 — PG

LT 120 — LE 120

VENT — 1"

T-3-3-1

OF

2 X 3 — V1215

W — RINSE/BRINE/SUPERNATANT WASTE 3S, I-07 TO WASTING TANK

4" — 4 X 2 — V1217 — DRAIN

AT 121 — AE 121 — COND — BR — V1218

PG — V1220 — V1219 — 3" — 1 X 3 — 3 X 6 — V1221 — BR — BRINE 3L, I-04 TO REGENERATION TANKS

P-3-3-1

M — V1222 — WB — WASTE BRINE 3R, I-07 TO WASTING TANK

| | | | | | | | |
|---|---|---|---|---|---|---|---|
| **ECKLER ENGINEERING, INC.**<br>4700 RIVERSIDE DRIVE, SUITE 110 - CORAL SPRINGS, FL 33067<br>(954) 510-4700 - FAX (954) 755-2741<br>CA No. 7803 | DSGN: D. K. HAMMANN<br>DR: R.PAEZ<br>CHK: D. K. HAMMANN<br>APVD: D. K. HAMMANN | VERIFY SCALE<br>1"<br>BAR IS ONE INCH ON ORIGINAL DRAWING. ADJUST SCALES AS NECESSARY. | No. / DATE / REVISIONS / BY / APVD | CONSULTANT | ----<br>DOUGLAS K. HAMMANN, P.E.<br>FL # 50589 | **VILLAGE OF PALM SPRINGS**<br>SCADA SYSTEM UPGRADE MAIN WATER TREATMENT PLANT (MAIN WTP)<br>2021B-003 | UNIT PROCESS 3 - PRETREATMENT (MIEX SYSTEM) MODIFICATIONS | DWG NO. 16 / OF 70 / DATE AUGUST 26, 2020 / SHEET I-05 / PROJ. NO. 400-077.01 |

File name: C:\Civil 3D Projects\400-077.01 - Scada System Upgrades Main and R. L. Pratt WTP\01_Working (Main)\400-077.01_I-05-MULTI.dwg; Plotted @: 12/23/2020 1:28:36 PM; Scale multiplier: 0.5; Printed by: Matheus Siqueira; Milestone: BID DOCUMENTS

BID DOCUMENTS

FUTURE

SCADA HMI NETWORK

EN — EH — EN — M | F/O — F/O — CTU

NETWORK FIELD

MIEX ACP

3H, I-03

HS, LSH, LSL, START/STOP, SC, VFD

I, PAH, PAL, NOTE 2

S, AIR SUPPLY, V1318

BULK FILL VIRGIN RESIN LIQUISACKS — VR

M-3-4-2

SERVICE WATER 9L, I-18 — 1" — W2

REGENERATED RESIN 3N, I-04 — 6" — RR

REGENERATED RESIN 3P, I-04 — 6" — RR

M-3-4-1

LT 131, LE 131

T-3-4-1

T-3-4-2

PG, V1315, V1314

1" TO REGEN TANK 3I, I-04 VIRGIN RESIN

V1319, V1313, V1316, V1317, V1312

P-3-4-2

FT 133, FE 133, PT 133, PE 133

V1309, V1308

1" SA V1303 SAMPLE

2 1/2" V1306, V1304

P-3-4-1

2 1/2 X 1 1/2, V1310

FR — FRESH RESIN 3G, I-03 TO CONTACTOR

1 X 2 1/2, V1307 NOTE 1

1 X 2 1/2, S, V1311

NOTE:
1. FLUSH WATER FOR 3-5 SECS AFTER SHUTTING PUMP OFF.
2. FLUSH WATER FOR 30 SECS AFTER SHUTTING PUMP OFF.


**ECKLER ENGINEERING, INC.**
4700 RIVERSIDE DRIVE, SUITE 110 - CORAL SPRINGS, FL 33067
(954) 510-4700 - FAX (954) 755-2741
CA No. 7803


| | |
|---|---|
| DSGN: | D. K. HAMMANN |
| DR: | R.PAEZ |
| CHK: | D. K. HAMMANN |
| APVD: | D. K. HAMMANN |

VERIFY SCALE — 1" — BAR IS ONE INCH ON ORIGINAL DRAWING. ADJUST SCALES AS NECESSARY.

| No. | DATE | REVISIONS | BY | APVD |
|---|---|---|---|---|

CONSULTANT

---
DOUGLAS K. HAMMANN, P.E.
FL # 50589

**VILLAGE OF PALM SPRINGS**

SCADA SYSTEM UPGRADE MAIN WATER TREATMENT PLANT (MAIN WTP)
2021B-003

UNIT PROCESS 3 - PRETREATMENT (MIEX SYSTEM) MODIFICATIONS

| | |
|---|---|
| DWG NO. | 17 |
| OF | 70 |
| SHEET | I-06 |
| PROJ. NO. | 400-077.01 |
| DATE | AUGUST 26, 2020 |


File name: C:\Civil 3D Projects\400-077.01 - Scada System Upgrades Main and R. L. Pratt WTP\01_Working (Main)\400-077.01_I-05-MULTI.dwg; Plotted @: 12/23/2020 1:28:37 PM; Scale multiplier: 0.5; Printed by: Matheus Siqueira; Milestone: BID DOCUMENTS


BID DOCUMENTS

FUTURE

SCADA HMI NETWORK

EN — EH — EN — M | F/O — F/O — CTU

NETWORK FIELD

MIEX ACP

LAH

FROM LIC 3Q, I-05

ON / OFF

MAKE UP WATER 9M, I-18 — 2" — W2 — V1402

SALT BULK TRUCK DELIVERY — 4" — SALT

VENT

SALT SATURATION TANK T-3-5-1

WASTE BRINE 3R, I-05 FROM REGENERANT TANK — WB

RINSE/BRINE/SUPERNATANT WASTE 3S, I-05 FROM REGENERATION TANKS — W

LS 141

WASTE BRINE TANK T-3-6-1

V1407 — SSS — V1403 — V1408 N.C. — P-3-5-1 — V1404 — V1405 — V1406 — SSS — SALT SOLUTION 3P, I-05 TO REGENERANT TANK

V1401 — W — WASTE BRINE 3U, I-09

| | | | | | | | | | | |
|---|---|---|---|---|---|---|---|---|---|---|
| **ECKLER ENGINEERING, INC.**<br>4700 RIVERSIDE DRIVE, SUITE 110 - CORAL SPRINGS, FL 33067<br>(954) 510-4700 - FAX (954) 755-2741<br>CA No. 7803 | DSGN: D. K. HAMMANN<br>DR: R.PAEZ<br>CHK: D. K. HAMMANN<br>APVD: D. K. HAMMANN | VERIFY SCALE<br>1"<br>BAR IS ONE INCH ON ORIGINAL DRAWING. ADJUST SCALES AS NECESSARY. | No. | DATE | REVISIONS | BY | APVD | CONSULTANT | ----<br>DOUGLAS K. HAMMANN, P.E.<br>FL # 50589 | **VILLAGE OF PALM SPRINGS**<br>SCADA SYSTEM UPGRADE MAIN WATER TREATMENT PLANT (MAIN WTP)<br>2021B-003 | UNIT PROCESS 3 - PRETREATMENT (MIEX SYSTEM) MODIFICATIONS | DWG NO. 18<br>OF 70<br>DATE AUGUST 26, 2020 | SHEET I-07<br>PROJ. NO. 400-077.01 |

File name: C:\Civil 3D Projects\400-077.01 - Scada System Upgrades Main and R. L. Pratt WTP\01_Working (Main)\400-077.01_I-05-MULTI.dwg; Plotted @: 12/23/2020 1:28:38 PM; Scale multiplier: 0.5; Printed by: Matheus Siqueira; Milestone: BID DOCUMENTS

BID DOCUMENTS

FUTURE

SCADA HMI NETWORK

EN — EH — EN — M | F/O — F/O — CTU

NETWORK FIELD

MIEX ACP

VFD VFD VFD VFD FIC FIC FIC FIC

RECYCLED/SPENT RESIN 3A, I-03 — RSR — NO — 3 X 4 — P-3-7-1 — 4" — NO — 4 X 3 — RSR — RECYCLED/SPENT RESIN 3J, I-04

V1509 V1505 V1513 V1517 V1518 V1519

PG

FE 151 FT 151

RECYCLED/SPENT RESIN 3B, I-03 — RSR — NO — 3 X 4 — P-3-7-2 — 4" — NO — 4 X 3 — RSR — RECYCLED/SPENT RESIN 3J, I-04

V1510 V1506 V1514 V1520 V1521 V1522

FE 152 FT 152

RECYCLED/SPENT RESIN 3C, I-03 — RSR — NO — 3 X 4 — P-3-7-3 — 4" — NO — 4 X 3 — RSR — RECYCLED/SPENT RESIN 3K, I-04

V1511 V1507 V1515 V1523 V1524 V1525

FE 153 FT 153

RECYCLED/SPENT RESIN 3D, I-03 — RSR — NO — 3 X 4 — P-3-7-4 — 4" — NO — 4 X 3 — RSR — RECYCLED/SPENT RESIN 3K, I-04

V1512 V1508 V1516 V1526 V1527 V1528

FE 154 FT 154

PROCESS WATER 3E, I-03

1" W2 A TYP.

| | | | | | | | | | | | | | | | | | |
|---|---|---|---|---|---|---|---|---|---|---|---|---|---|---|---|---|---|
| A | B | C | D | E | F | G | H | I | J | K | L | M | N | O | P | | |


**ECKLER ENGINEERING, INC.**
4700 RIVERSIDE DRIVE, SUITE 110 - CORAL SPRINGS, FL 33067
(954) 510-4700 - FAX (954) 755-2741
CA No. 7803


DSGN: D. K. HAMMANN
DR: R.PAEZ
CHK: D. K. HAMMANN
APVD: D. K. HAMMANN

VERIFY SCALE
1"
BAR IS ONE INCH ON ORIGINAL DRAWING. ADJUST SCALES AS NECESSARY.

| No. | DATE | REVISIONS | BY | APVD |
|---|---|---|---|---|

CONSULTANT

---
DOUGLAS K. HAMMANN, P.E.
FL # 50589

**VILLAGE OF PALM SPRINGS**

SCADA SYSTEM UPGRADE MAIN WATER TREATMENT PLANT (MAIN WTP)
2021B-003

UNIT PROCESS 3 - PRETREATMENT (MIEX SYSTEM) MODIFICATIONS

DWG NO. 19 | SHEET I-08
OF 70 | PROJ. NO. 400-077.01
DATE AUGUST 26, 2020


File name: C:\Civil 3D Projects\400-077.01 - Scada System Upgrades Main and R. L. Pratt WTP\01_Working (Main)\400-077.01_I-05-MULTI.dwg; Plotted @: 12/23/2020 1:28:39 PM; Scale multiplier: 0.5; Printed by: Matheus Siqueira; Milestone: BID DOCUMENTS


BID DOCUMENTS

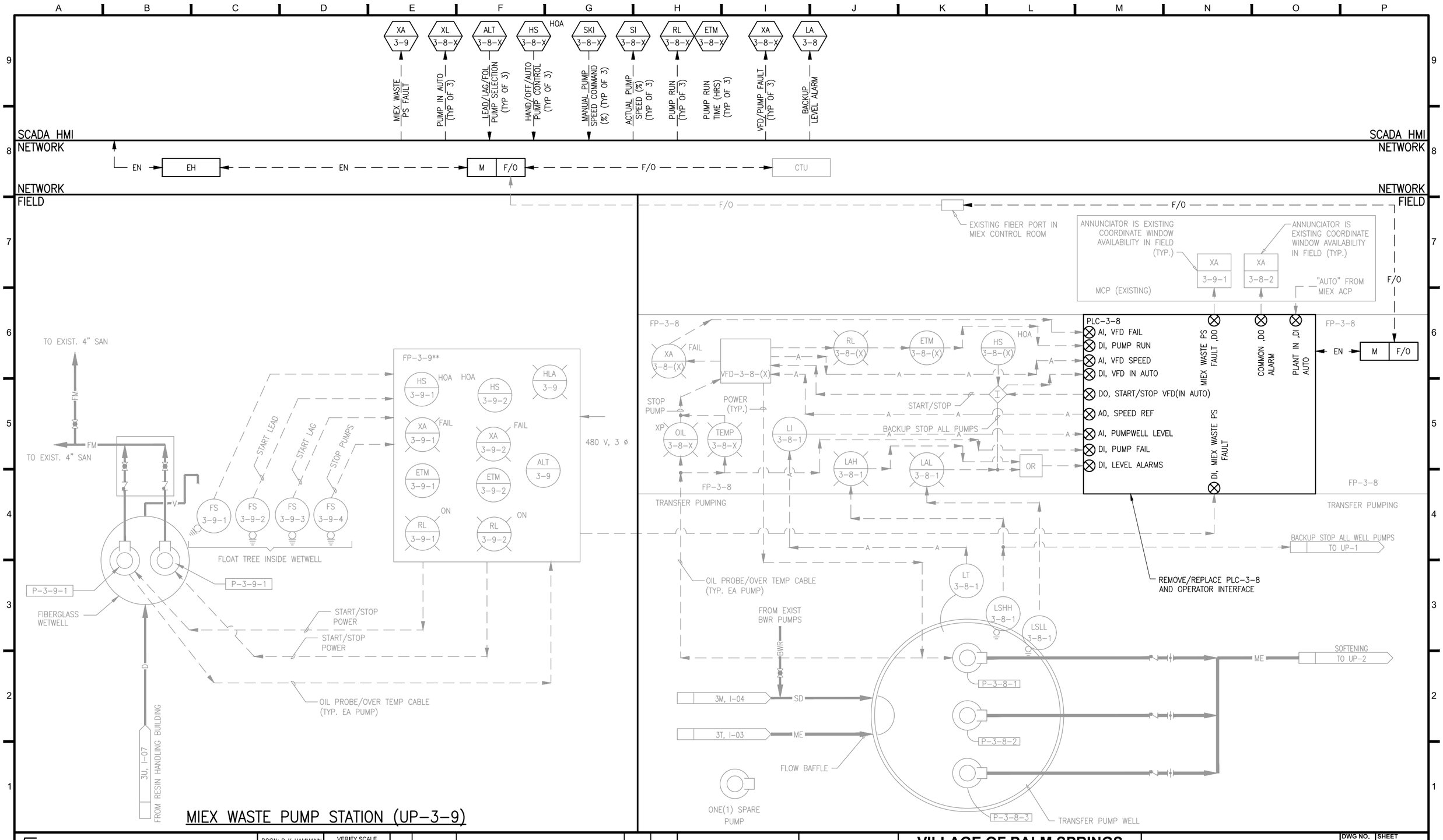


# MIEX WASTE PUMP STATION (UP-3-9)


**ECKLER ENGINEERING, INC.**
4700 RIVERSIDE DRIVE, SUITE 110 - CORAL SPRINGS, FL 33067
(954) 510-4700 - FAX (954) 755-2741
CA No. 7803


| | |
|---|---|
| DSGN: | D. K. HAMMANN |
| DR: | R.PAEZ |
| CHK: | D. K. HAMMANN |
| APVD: | D. K. HAMMANN |

VERIFY SCALE — 1" — BAR IS ONE INCH ON ORIGINAL DRAWING. ADJUST SCALES AS NECESSARY.

| No. | DATE | REVISIONS | BY | APVD |
|---|---|---|---|---|

CONSULTANT

DOUGLAS K. HAMMANN, P.E.
FL # 50589

**VILLAGE OF PALM SPRINGS**

SCADA SYSTEM UPGRADE MAIN WATER TREATMENT PLANT (MAIN WTP)
2021B-003

UNIT PROCESS 3 - PRETREATMENT (MIEX SYSTEM) MODIFICATIONS

| | |
|---|---|
| DWG NO. | 20 |
| OF | 70 |
| SHEET | I-09 |
| PROJ. NO. | 400-077.01 |
| DATE | AUGUST 26, 2020 |

BID DOCUMENTS


File name: C:\Civil 3D Projects\400-077.01 - Scada System Upgrades Main and R. L. Pratt WTP\01_Working (Main)\400-077.01_I-09-MULTI.dwg; Plotted @: 12/23/2020 1:28:45 PM; Scale multiplier: 0.5; Printed by: Matheus Siqueira; Milestone: BID DOCUMENTS

LI 4-4 — CONTACT BASIN LEVEL (FT)
LHH 4-4 — CONTACT BASIN HIGH HIGH
AI 4-4-1 — CONTACT BASIN FREE CL2 RESIDUAL (MG/L)
XAL 4-4-1 — LOW CL2
XAH 4-4-1 — HIGH CL2
XL 4-4-X — PUMP IN AUTO (TYP OF 4)
ALT 4-4-X — LEAD/LAG/FOL PUMP SELECTION (TYP OF 4)
HS 4-4-X — HAND/OFF/AUTO PUMP CONTROL (TYP OF 4)
SKI 4-4-X — MANUAL PUMP SPEED COMMAND (%) (TYP OF 4)
SI 4-4-X — ACTUAL PUMP SPEED (%) (TYP OF 4)
RL 4-4-X — PUMP RUN (TYP OF 4)
ETM 3-1-X — PUMP RUN TIME (HRS) (TYP OF 4)
XA 4-4-X — VFD/PUMP FAULT (TYP OF 4)

SCADA HMI NETWORK

EN — EH — EN — M | F/O — F/O — CTU

NETWORK FIELD

REMOTE IO-MCP
COMPUTER BASED OI
EN — M | F/O
EN
PLC-MCP

F/O

HARDWIRE SIGNALS TO/FROM EXISTING VFD'S (TYP OF 4)

FREE CL2 RESIDUAL

"AUTO" FROM UP-2
AAL 4-4-1 — LOW CLORINE RESIDUAL
XA 4-4 — FAIL

CHLORINE CONTACT BASIN TRANSFER WELL LEVEL TO PLC-5-5
FROM UP-5 "STOP" TRANSFER PUMPS
LALL 4-4
LAHH 4-4
TO EXISTING UP-1 INFLUENT RAW WATER "STOP" WELLS
MCP

AIT 4-4-1
AE 4-4-1
C.R.

W2 — 9D, I-18
T-4-3-1 CHLORINE CONTACT TANK
LSHH 4-4
LE-4-4
7A, I-16
BWR
2A, I-2
SW
P-4-4-1
P-4-4-2
P-4-4-3
P-4-4-4
CAV-4-4-1
CAV-4-4-2
CAV-4-4-3
CAV-4-4-4
PI 4-4-1 / ZS 4-4-1
PI 4-4-2 / ZS 4-4-2
PI 4-4-3 / ZS 4-4-3
PI 4-4-4 / ZS 4-4-4
SA
STI
4A, I-5
DR
LSLL 4-4
DRAIN
4B, I-8
POWER

FP-4-4
XA 4-4-X B — FAIL
OR
XA 4-4-X A — FAIL
RL 4-4-X — ON
RESET 4-4
SHK 4-4-X
HS 4-4-X — HOA
RUN TRANSFER PUMPS IN "AUTO"
LIT 4-4
LI 4-4
AC
AC
ALT 4-4
PSL 4-4
LLL 4-4
LHH 4-4

120V

VFD-4-4-X
MAINTAIN LEVEL SETPOINT FROM PLC-5-5 (SPEED REF.)
480V, 3ø

| | | |

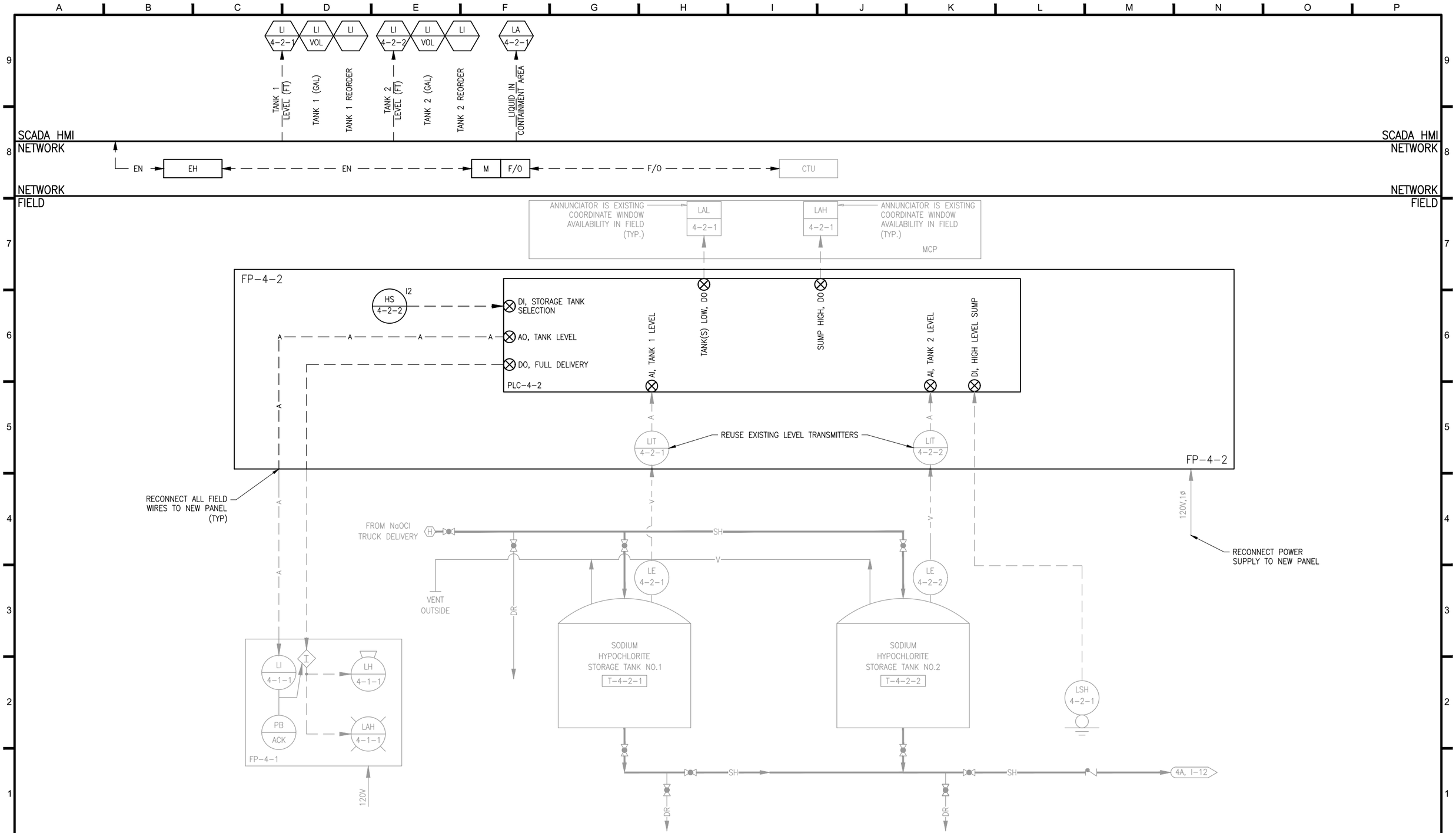


| | | | | | | | | | | |
|---|---|---|---|---|---|---|---|---|---|---|
| **ECKLER ENGINEERING, INC.**<br>4700 RIVERSIDE DRIVE, SUITE 110 - CORAL SPRINGS, FL 33067<br>(954) 510-4700 - FAX (954) 755-2741<br>CA No. 7803 | DSGN: D. K. HAMMANN<br>DR: R.PAEZ<br>CHK: D. K. HAMMANN<br>APVD: D. K. HAMMANN | VERIFY SCALE<br>1"<br>BAR IS ONE INCH ON ORIGINAL DRAWING. ADJUST SCALES AS NECESSARY. | No. | DATE | REVISIONS | BY | APVD | CONSULTANT | DOUGLAS K. HAMMANN, P.E.<br>FL # 50589 | **VILLAGE OF PALM SPRINGS**<br>SCADA SYSTEM UPGRADE MAIN WATER TREATMENT PLANT (MAIN WTP)<br>2021B-003 | UNIT PROCESS 4 - DISINFECTION (NaOCL STORAGE) MODIFICATIONS | DWG NO. 22 OF 70<br>SHEET I-11<br>PROJ. NO. 400-077.01<br>DATE AUGUST 26, 2020 |

File name: C:\Civil 3D Projects\400-077.01 - Scada System Upgrades Main and R. L. Pratt WTP\01_Working (Main)\400-077.01_I-09-MULTI.dwg; Plotted @: 12/23/2020 1:28:48 PM; Scale multiplier: 0.5; Printed by: Matheus Siqueira; Milestone: BID DOCUMENTS

BID DOCUMENTS

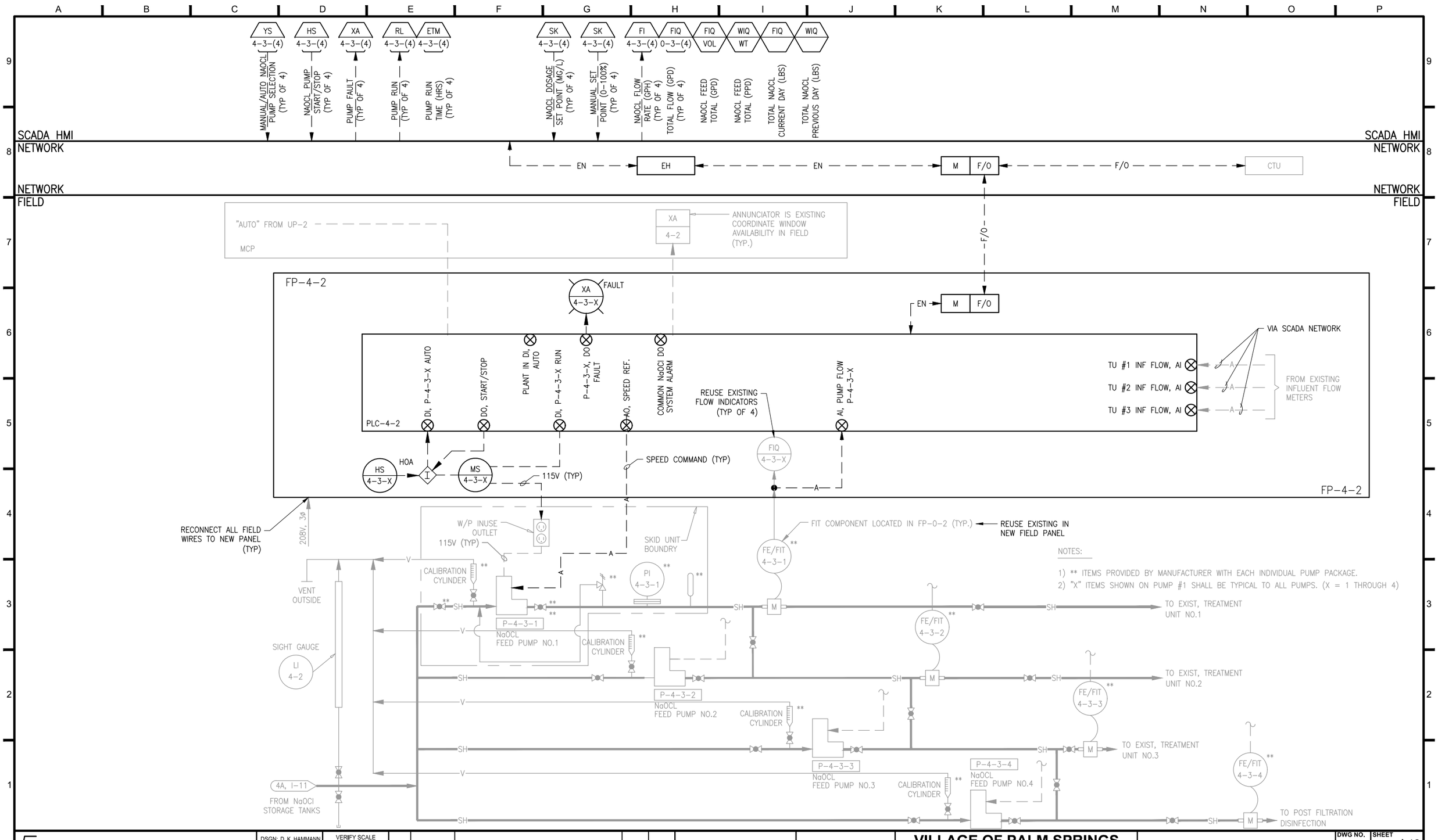


**ECKLER ENGINEERING, INC.**
4700 RIVERSIDE DRIVE, SUITE 110 - CORAL SPRINGS, FL 33067
(954) 510-4700 - FAX (954) 755-2741
CA No. 7803

DSGN: D. K. HAMMANN
DR: R.PAEZ
CHK: D. K. HAMMANN
APVD: D. K. HAMMANN

VERIFY SCALE — 1" — BAR IS ONE INCH ON ORIGINAL DRAWING. ADJUST SCALES AS NECESSARY.

| No. | DATE | REVISIONS | BY | APVD |
|---|---|---|---|---|

CONSULTANT
DOUGLAS K. HAMMANN, P.E.
FL # 50589

**VILLAGE OF PALM SPRINGS**
SCADA SYSTEM UPGRADE MAIN WATER TREATMENT PLANT (MAIN WTP)
2021B-003

UNIT PROCESS 4 - DISINFECTION (NaOCL FEED PUMPS) MODIFICATIONS

DWG NO. 23 OF 70 | SHEET I-12 | PROJ. NO. 400-077.01 | DATE AUGUST 26, 2020

File name: C:\Civil 3D Projects\400-077.01 - Scada System Upgrades Main and R. L. Pratt WTP\01_Working (Main)\400-077.01_I-09-MULTI.dwg; Plotted @: 12/23/2020 1:28:50 PM; Scale multiplier: 0.5; Printed by: Matheus Siqueira; Milestone: BID DOCUMENTS

BID DOCUMENTS

AI 5-3 — FILTER EFFLUENT FREE CL2 (0-20 MG/L)
AAL — CL2 RESIDUAL HIGH
AAH — CL2 RESIDUAL LOW
AI 5-3-X — FILTER EFFLUENT TURBIDITY (NTU)
AAH 5-3-X — FILTER TURBIDITY HIGH

FILTER (TYPICAL 1 – 6)

ZL 5-2-(x) — FILTER INFLUENT VALVE OPEN/CLOSE
ZL 5-3-X — COMMON FILTER EFFLUENT VALVE OPEN/CLOSE
ZL 5-3-(6)AB — FILTER EFFLUENT VALVE OPEN/CLOSE (SIDES A & B)
ZL 5-4-(6) — FILTER BACKWASH SUPPLY VALVE OPEN/CLOSE
ZL 5-5-(6) — BACKWASH DRAIN VALVE OPEN/CLOSE
ZL 5-6-(6) — FILTER TO WASTE VALVE OPEN/CLOSE
ZL 5-7-(6)AB — BACKWASH AIR VALVE OPEN/CLOSE (SIDES A & B)
LI 5-3-(6)AB — WATER LEVEL FILTER (FT) (SIDES A & B)
HLA 5-3-(6)AB — HIGH FILTER WATER LEVEL (SIDES A & B)

QI 5-5-(6)B — FILTER-X IN BACKWASH
QI 5-5-(5)A — FILTER-X READY
HS 5-1-(2) HOA — THM BLOWER (TYP OF 2)
RL 5-1-(2) — THM BLOWER RUN (TYP OF 2)
ETM 5-1-(2) — THM BLOWER RUN TIME (HRS) (TYP OF 2)
XA 5-1-(2) — THM BLOWER FAULT (TYP OF 2)

## NOTES

1) PLC CONTROL OF VALVES, BACKWASH PUMPS, AND BACKWASH BLOWERS PER E-DWGS.

SCADA HMI NETWORK

EN — EH — EN — M F/O — F/O — CTU

NETWORK FIELD — F/O

MCP

XA 5-3 — FAIL — TO EXIST UP-1 "START" WELLS ON "LOW" LEVEL; TO EXIST UP-1 "STOP" WELLS ON "HIGH" LEVEL

FP-5-1

"RUN" BLOWERS IN "AUTO" VIA REMOTE I/O-MCP

NOTE
X = 1 (FILTER BAY 1)
X = 2 (FILTER BAY 2)
X = 3 (FILTER BAY 3)

FI 0-1 — SHK 0-1 — RESISTANCE/CURRENT CONVERTER

XA 5-3-X HIGH — LAH 5-2 HIGH — OR — RESET 5-2

TO UP-4, CHLORINE TRANSFER PUMPS ON HIGH LEVEL

PLC-5-5
SECTION 13710 PROGRAMABLE LOGIC CONTROLLER

M F/O — EN — COMPUTER BASED OI

HS 5-5 A1 MA — HS 5-5 A2 MA — HS 5-5 A3 MA — PB 5-5 C START

START "AUTO" BACKWASH SEQUENCE

HS 0-1-1 HOA — HS 0-1-2 HOA — QL 0-1-1 — QL 0-1-2

HS 5-1-2 HOA — QL 5-1-2 ON
HS 5-1-1 HOA — QL 5-1-1 ON

ZL 5-3-X A — HS 5-3-X A OC
ZL 5-4-X — HS 5-4-X OC
ZL 5-7-X A — HS 5-7-X A OC
ZL 5-6-X — HS 5-6-X OC
ZL 5-2-X — HS 5-2-X OC
ZL 5-5-X — HS 5-5-X OC
ZL 5-3-X B — HS 5-3-X B OC
ZL 5-7-X B — HS 5-7-X B OC
ZL 5-3-X — HS 5-3-X OC

REMOVE/REPLACE PLC AND OPERATOR INTERFACE

F/O

REMOTE IO-MCP
COMPUTER BASED OI — EN — M F/O — EN — PLC-MCP

HARDWIRED THM FAN CONTROLS — MCC

STI — EA — THM STRIPPING TOWER 1 — PDI 5-1-1 — AIR INFLOW — M-5-1-1
STI — EA — THM STRIPPING TOWER 2 — PDI 5-1-2 — AIR INFLOW — M-5-1-2
4A, I-10

FI — FTW — FTW/BWD — 5C, I-16

FILTER 1A — ZS 5-6-X — FV 5-6-X
FILTER 1B — FV 5-3-X B — ZS 5-3-X B
ZS 5-7-X A — FV 5-7-X A
FV 5-3-X A — ZS 5-3-X A
LT 5-2-XA
LT 5-2-XB
ZS 5-2-X — FV 5-2-X — ALP
ZS 5-3-X — FV 5-3-X
FV 5-7-X B — ZS 5-7-X B
FE
BWS
INFLUENT FLUME
LSH 5-2
W2 — 9E, I-10
ALP — 0A, I-14

FV 5-4-X — ZS 5-4-X
FV 5-5-X — ZS 5-5-X
AIT 5-3-X — AE 5-3-X — TURB
AE 5-3-1 — AIT 5-3-1 — CL2 FREE
ARV-5-5-2
D — TO SANITARY SEWER
FE — 5A, I-14
BWS — 5B, I-14

REMOVE/REPLACE LEVEL TRANSMITTER (TYP OF 6)

| | | | | | | | |
|---|---|---|---|---|---|---|---|
| ECKLER ENGINEERING, INC. 4700 RIVERSIDE DRIVE, SUITE 110 - CORAL SPRINGS, FL 33067 (954) 510-4700 - FAX (954) 755-2741 CA No. 7803 | DSGN: D. K. HAMMANN<br>DR: R.PAEZ<br>CHK: D. K. HAMMANN<br>APVD: D. K. HAMMANN | VERIFY SCALE 1" BAR IS ONE INCH ON ORIGINAL DRAWING. ADJUST SCALES AS NECESSARY. | No. / DATE / REVISIONS / BY / APVD | CONSULTANT: DOUGLAS K. HAMMANN, P.E. FL # 50589 | VILLAGE OF PALM SPRINGS<br>SCADA SYSTEM UPGRADE MAIN WATER TREATMENT PLANT (MAIN WTP)<br>2021B-003 | UNIT PROCESS 5 - FILTRATION MODIFICATIONS | DWG NO. 24 OF 70 — SHEET I-13 — PROJ. NO. 400-077.01 — DATE AUGUST 26, 2020 |

File name: C:\Civil 3D Projects\400-077.01 - Scada System Upgrades Main and R. L. Pratt WTP\01_Working (Main)\400-077.01_I-09-MULTI.dwg; Plotted @: 12/23/2020 1:28:52 PM; Scale multiplier: 0.5; Printed by: Matheus Siqueira; Milestone: BID DOCUMENTS

BID DOCUMENTS

LI 5-8 | LAH 5-8 | LAL 5-8 | LHH 5-8 | LLL 5-8 | FI 5-5 | FIQ | FIQ | FI 0-1 | FIQ | FIQ

BWASH PS LEVEL (FT) | BWASH PS LEVEL HIGH | BWASH PS LEVEL LOW | BWASH PS GST'S HIGH HIGH | BWASH PS GST'S LOW LOW | FILTER BACKWASH FLOW (GPM) | FILTER BACKWASH TOTAL FLOW CURRENT DAY GAL X 1000 | FILTER BACKWASH TOTAL FLOW PREVIOUS DAY GAL X 1000 | FILTER BACKWASH AIR FLOW (CFM) | FILTER BACKWASH AIR TOTAL FLOW CURRENT | FILTER BACKWASH AIR TOTAL FLOW PREVIOUS DAY

SCADA HMI NETWORK

EN — EH — EN — M | F/O — F/O — CTU

NETWORK FIELD

F/O

FROM PLC-5-5 (DWG I-13)

FP-5-1

RL 5-5-1 ON | HS 5-5-1 HOA | FQI 5-5 | FQ 5-5 | FI 5-5

SHK 5-5

RESISTANCE/CURRENT CONVERTER

HS 5-5-2 HOA | RL 5-5-2 ON

INTAKE SILENCER ** M-0-1-1B — M-0-1-1A INTAKE FILTER — M-0-1-1C POSITIVE DISPLACEMENT BLOWER — M-0-1-1D ** DISCHARGE SILENCER — PRV-0-1-1 ** — CV**

INTAKE SILENCER ** M-0-1-2B — M-0-1-2A ** INTAKE FILTER — M-0-1-2C POSITIVE DISPLACEMENT BLOWER — M-0-1-2D ** DISCHARGE SILENCER — PRV-0-1-2 ** — CV**

REMOTE IO-MCP

COMPUTER BASED OI — EN — M | F/O — EN — PLC-MCP

HARDWIRED BACKWASH BLOWER AND BACKWASH PUMP CONTROLS — MCC

120V — FCV 0-1 — FE 0-1 — FIT 0-1 — ALP — ALP — 0A, I-13

MCP FIELD

LALL 5-8 | LAHH 5-8

BACKUP "STOP" WELLS — TO EXISTING UP-1 INFLUENT RAW WATER — BACKUP "START" WELLS

LIR 5-8-2 GST LEVEL

6D, I-15 — AG

5A, I-13 — FE

LSLL 5-8 | LSHH 5-8

LSH 5-8 | LSL 5-8

LE 5-8

BACKWASH PUMP STATION

FE — FE — 5E, I-10

FP-5-8

LIT 5-8

120V

CAV-5-5-1 — P-5-5-1 — BWS

CAV-5-5-2 — P-5-5-2 — BWS

FE 5-5-1 | FIT 5-5-1

ARV-5-5-1

DRAIN

D

DR — DR — DR — 5D, I-8

5B, I-13 — BWS — BWS

8 — 120V — E — FCV 5-5

LOW PRESSURE AIR SYSTEM (ALP)

| | | | | | | | |
|---|---|---|---|---|---|---|---|
| **ECKLER ENGINEERING, INC.**<br>4700 RIVERSIDE DRIVE, SUITE 110 - CORAL SPRINGS, FL 33067<br>(954) 510-4700 - FAX (954) 755-2741<br>CA No. 7803 | DSGN: D. K. HAMMANN<br>DR: R.PAEZ<br>CHK: D. K. HAMMANN<br>APVD: D. K. HAMMANN | VERIFY SCALE<br>1"<br>BAR IS ONE INCH ON ORIGINAL DRAWING. ADJUST SCALES AS NECESSARY. | No. / DATE / REVISIONS / BY / APVD | CONSULTANT | ----<br>DOUGLAS K. HAMMANN, P.E.<br>FL # 50589 | **VILLAGE OF PALM SPRINGS**<br>SCADA SYSTEM UPGRADE MAIN WATER TREATMENT PLANT (MAIN WTP)<br>2021B-003 | UNIT PROCESS 5 - FILTRATION MODIFICATIONS | DWG NO. 25 / OF 70<br>SHEET I-14<br>PROJ. NO. 400-077.01<br>DATE AUGUST 26, 2020 |

File name: C:\Civil 3D Projects\400-077.01 - Scada System Upgrades Main and R. L. Pratt WTP\01_Working (Main)\400-077.01_I-14-MULTI.dwg; Plotted @: 12/23/2020 1:28:58 PM; Scale multiplier: 0.5; Printed by: Matheus Siqueira; Milestone: BID DOCUMENTS

BID DOCUMENTS

AMMONIATORS (TYP OF 2)

HS 6-1-(2) — AMMONIATORS OPEN/CLOSE/HOLD

RL 6-1-(2) — VALVE OPEN

ETM 6-1-(2) — TIME ON (HRS)

HMPS FEED PUMPS (TYP OF 3)

HS 6-2-(3) — HMPS FEED PUMPS

RL 6-2-(3) — PUMP RUN

ETM 6-2-(3) — PUMP RUN TIME (HRS)

XA 6-2-(3) — PUMP FAULT

## NOTES

1) AMMONIATOR AND HMPS HMI ARE FUTURE.

SCADA HMI NETWORK

EN — EH — EN — M | F/O — F/O — CTU

NETWORK FIELD

"AUTO" FROM UP-2 — MCP

RUN AMMONIATORS IN "AUTO"

RUN POLYPHOSPHATE PUMPS IN "AUTO" — MCP

FP-6-2

FP-6-1

EXISITNG LIGHT AND VENTILATION FAN OF AMONIATION SHED

L

F

SS 1 — OO

SS 2 — OO

KS 6-1 — 0-30 MIN

120V

HS 6-1-1 — OCA

HS 6-1-2 — OCA

VENT

TO EXIST. INJ. POINT

6D, I-14

9F, I-10 — W2

AG

PSV-6-1-1

PI 6-1-1

FI 6-1-1

E

FCV 6-1-1

FV 6-1-1

M-6-1-1 AMMONIATOR 1

PSV-6-1-2

PI 6-1-2

FI 6-1-2

FCV 6-1-2

FV 6-1-2

M-6-1-2 AMMONIATOR 2

PCV-6-1-1

AMMONIA STORAGE TANK

M-6-1-1

I

MS 6-2-2

HS 6-2-2 — HOA

QL 6-2-2 — ON

MS 6-2-1

HS 6-2-1 — HOA

QL 6-2-1 — ON

MS 6-3-3

HS 6-3-3 — HOA

QL 6-3-3 — ON

MS 6-3-2

HS 6-3-2 — HOA

QL 6-3-2 — ON

MS 6-3-1

HS 6-3-1 — HOA

QL 6-3-1 — ON

W2

POLYPHOSPHATE BAGS

M

M-6-2-1 MIXER

T-6-2-1 POLYPHOSPHATE TANK

FOOT VALVE

P-6-2-1 POLY PHOSPHATE FEED PUMP

P-6-2-2 POLY PHOSPHATE FEED PUMP

P-6-2-3 POLY PHOSPHATE FEED PUMP

HMPS — 6A, I-2

HMPS — 6B, I-2

HMPS — 6C, I-2

M-6-2-2 MIXER

T-6-2-2 POLYPHOSPHATE TANK

| | | | | | | | | |
|---|---|---|---|---|---|---|---|---|
| **ECKLER ENGINEERING, INC.**<br>4700 RIVERSIDE DRIVE, SUITE 110 - CORAL SPRINGS, FL 33067<br>(954) 510-4700 - FAX (954) 755-2741<br>CA No. 7803 | DSGN: D. K. HAMMANN<br>DR: R.PAEZ<br>CHK: D. K. HAMMANN<br>APVD: D. K. HAMMANN | VERIFY SCALE<br>1"<br>BAR IS ONE INCH ON ORIGINAL DRAWING. ADJUST SCALES AS NECESSARY. | No. / DATE / REVISIONS / BY / APVD | CONSULTANT | ----<br>DOUGLAS K. HAMMANN, P.E.<br>FL # 50589 | **VILLAGE OF PALM SPRINGS**<br>SCADA SYSTEM UPGRADE MAIN WATER TREATMENT PLANT (MAIN WTP)<br>2021B-003 | UNIT PROCESS 6 - CHEMICAL FEED SYSTEMS MODIFICATIONS | DWG NO. 26 / OF 70 / SHEET I-15 / PROJ. NO. 400-077.01 / DATE AUGUST 26, 2020 |

File name: C:\Civil 3D Projects\400-077.01 - Scada System Upgrades Main and R. L. Pratt WTP\01_Working (Main)\400-077.01_I-14-MULTI.dwg; Plotted @: 12/23/2020 1:28:59 PM; Scale multiplier: 0.5; Printed by: Matheus Siqueira; Milestone: BID DOCUMENTS

BID DOCUMENTS

BACKWASH RETURN PUMPS (TYP OF 2)

HS 7-2-(2) — HOLD/OFF/AUTO BACKWASH RETURN PUMPS
RL 7-2-(2) — PUMP RUN
ETM 7-2-(2) — PUMP RUN TIME (HRS)
XA 7-2-(2) — PUMP FAULT

SLUDGE PUMPS (TYP OF 2)

HS 7-3-(2) — HOLD/OFF/AUTO SLUDGE PUMPS
RL 7-3-(2) — PUMP RUN
ETM 7-3-(2) — PUMP RUN TIME (HRS)
XA 7-3-(2) — PUMP FAULT

LAH 7-1-2 — WASH BASIN HIGH LEVEL

SCADA HMI NETWORK

EN → EH → EN → M | F/O → F/O → CTU

NETWORK FIELD

F/O

EXISTING SLUDGE LAGOON
T-7-1-1

REMOTE IO-WWR
M | F/O
EN
PLC-WWR

HARDWIRED CONTROLS

LSH 7-1-2

OF

OF SPILLWAY

WASHWATER RECOVERY BASIN
T-7-1-2

BWD/DR

2B, I-2
4B, I-4
5C, I-13
5D, I-6

FH

STOP PUMPS

LSL 7-2-1
LSL 7-3-1

G-7-1-1
G-7-1-2

W2

P-7-2-1
P-7-3-1
P-7-2-2
P-7-3-2

CHS

7A, I-10 — BWR
9I, I-10 — W2

MCP

XA 7-1 — COMMON

FP-7-1

LAH 7-1-2 → I → RESET 7-1

FROM P-7-2-1
XA 7-2-1 — FAIL
XA 7-2-3 — TEMP
MS 7-2-1
MS 7-2-2

FROM P-7-2-2
XA 7-2-2 — FAIL
XA 7-2-4 — TEMP
I — STOP
HS 7-2-1 — HOA
HS 7-2-2 — HOA

FROM P-7-3-1
XA 7-3-1 — FAIL
XA 7-3-3 — TEMP
MS 7-3-1
MS 7-3-2

FROM P-7-3-2
XA 7-3-2 — FAIL
XA 7-3-4 — TEMP
I — STOP
HS 7-3-1 — HOA
HS 7-3-2 — HOA

RL 7-3-2 — RUN
RL 7-3-1 — RUN
RL 7-2-1 — RUN
RL 7-2-2


**ECKLER ENGINEERING, INC.**
4700 RIVERSIDE DRIVE, SUITE 110 - CORAL SPRINGS, FL 33067
(954) 510-4700 - FAX (954) 755-2741
CA No. 7803


DSGN: D. K. HAMMANN
DR: R.PAEZ
CHK: D. K. HAMMANN
APVD: D. K. HAMMANN

VERIFY SCALE
1"
BAR IS ONE INCH ON ORIGINAL DRAWING. ADJUST SCALES AS NECESSARY.

| No. | DATE | REVISIONS | BY | APVD |
|---|---|---|---|---|

CONSULTANT

---
DOUGLAS K. HAMMANN, P.E.
FL # 50589

**VILLAGE OF PALM SPRINGS**

SCADA SYSTEM UPGRADE MAIN WATER TREATMENT PLANT (MAIN WTP)
2021B-003

UNIT PROCESS 7 - WASHWATER RECOVERY MODIFICATIONS

DWG NO. 27 OF 70 | SHEET I-16 | PROJ. NO. 400-077.01 | DATE AUGUST 26, 2020


File name: C:\Civil 3D Projects\400-077.01 - Scada System Upgrades Main and R. L. Pratt WTP\01_Working (Main)\400-077.01_I-14-MULTI.dwg; Plotted @: 12/23/2020 1:29:00 PM; Scale multiplier: 0.5; Printed by: Matheus Siqueira; Milestone: BID DOCUMENTS


BID DOCUMENTS

LIME SLURRY PUMPS

HOA

HS 8-4-(4) — HOLD/OFF/AUTO PUMP CONTROL (TYP OF 4)

SKI 8-4-(4) — MANUAL PUMP SPEED COMMAND (%) (TYP OF 4)

SI 8-4-(4) — ACTUAL PUMP SPEED (%) (TYP OF 4)

RL 8-4-(4) — PUMP RUN (TYP OR 4)

ETM 8-4-(4) — PUMP RUN TIME (HRS)(TYP OF 4)

XL 8-4-(4) — VFD/PUMP FAULT (TYP OF 4)

XA 8-2 — COMMAND LIME SLURRY PUMP(S) ALARM

## NOTES

1) ETHERNET CABLE FOR EACH LIME SLURRY PUMP VFD (TYP OF 4).
2) ETHERNET CABLE TO BE TERMINATED AT FUTURE ETHERNET COMPATIBLE VFD'S (TYP OF 4).
3) ETHERNET CABLE FOR EACH LIME SLAKER/FEEDER PANEL (TYP OF 2). FUTURE CONTROL CAPABILITY.

SCADA HMI NETWORK

EN — EH — EN — M | F/O — F/O — CTU

FIELD NETWORK

REMOTE IO-MCP

COMPUTER BASED OI

EN — M | F/O

EN — PLC-MCP

HARDWIRED CONTROLS

FOR SLAKER, FEEDER CONTROL (SEE NOTE 3)

FOR VFD CONTROL (SEE NOTES 1, 2)

MCP

"AUTO" FROM UP-2

FAIL XA 8-2-1

FAIL XA 8-2-2

FROM FP-8-2-2

RUN LIME PREPARATION EQUIPMENT IN "AUTO"

TO FP-8-2-2 RUN LIME PREPARATION EQUIPMENT IN "AUTO"

ON QL 8-2-1

ON QL 8-2-2

FROM FP-8-2-2

RUN LIME SLURRY PUMPS IN "AUTO"

XA 8-4

120V 1Ø

FROM LIME TRUCK DELIVERY

LD

** M-8-1-1A EXHAUST FAN

BAG HOUSE FILTER

** M-8-1-1B MECHANICAL SHAKER

FP-8-1-2

NHK 8-1-2

NHK 8-1-1

RCT 8-1-2

RCT 8-1-1

HOA HS 8-1-2

HOA HS 8-1-1

T-8-1-1 LIME STORAGE SILO

M-8-1-2

M-8-1-1

BIN VIBRATOR (TYP)

HS 8-1-1A HO

HS 8-1-1B HO

MS 8-1-1A

MS 8-1-1B

ON QL 8-1-1A

ON QL 8-1-1B

FP-8-1-1

208V 3Ø

HIGH LEVEL

LLH 8-2-X A

HS 8-2-X B 00

MLL 8-2-X B

MLL 8-2-X C

HS 8-2-X C 00

PLL 8-2-X B

FP-8-2-X **

NO ROTATION

AND

AND

ON

OR

RESET 8-2-X

NO ROTATION

HS 8-2-X LA

SHK 8-2-X A

HS 8-2-X A 00

SI 8-2-X A

QL 8-2-X A

SQI 8-2-X A

A

A

A

A

LOW WATER PRESSURE

STOP FEEDER

HS 8-3-X HOA

FEEDER "ON"

208V,3Ø

480V,3Ø

FP-8-4

OR

RESET 8-4

HS 8-4 YN

QL 8-4 SHED

XA 8-4-X B FAIL

XA 8-4-X A FAIL

HS 8-4-X HOR

ETM 8-4-X

VFD 8-4-X

KS 8-4-X 0-60 SEC

HS 8-5-X OCA

RCT 8-5-X

SHK 8-4-X

RL 8-4-X ON

START TIMER

STOP TIMER

QL 8-5-X OPEN

POWER

ZS 8-4-1

P-8-4-1

LS

FV-8-5-1 NC

W2

ZS 8-4-2

P-8-4-2

FV-8-5-2 NC

ZS 8-4-3

P-8-4-3

FV-8-5-3 NC

ZS 8-4-4

P-8-4-4

FV-8-5-4 NC

H — LS — 8A, I-2

H — LS — 8B, I-2

H — LS — 8C, I-2

** M-8-2-1A FEEDER NO 1

** M-8-2-2A FEEDER NO 2

FROM FP-8-2-2

ROTARY INLET VALVE **

FEEDER "ON"

** ROTARY INLET VALVE

M-8-2-1A LIME FEEDER NO 1

M-8-2-1B LIME SLAKER NO 1

M-8-2-1C

M-8-2-2A

** M-8-2-2B

** M-8-2-2C

V — EXTERIOR VENT

LIME SLAKER NO 2

OF

GR

GRIT HOPPER

LS

LV-8-3-2

M-8-3-2

OF

LS

FROM FP-8-2-2

FI 8-3-2

T-8-3-2 DILUTION TANK

DR

OF/DR

LS

LS

LS

W2

LV-8-3-1

OF

LS

M-8-3-1

FI 8-3-1

T-8-3-1 DILUTION TANK

DR

OF/DR

LS

LS

W2

W2

W2

W2

9H, I-10 — W2

| | | |
|---|---|---|
| **ECKLER ENGINEERING, INC.**<br>4700 RIVERSIDE DRIVE, SUITE 110 - CORAL SPRINGS, FL 33067<br>(954) 510-4700 - FAX (954) 755-2741<br>CA No. 7803 | DSGN: D. K. HAMMANN<br>DR: R.PAEZ<br>CHK: D. K. HAMMANN<br>APVD: D. K. HAMMANN | VERIFY SCALE<br>1"<br>BAR IS ONE INCH ON ORIGINAL DRAWING. ADJUST SCALES AS NECESSARY. |

| No. | DATE | REVISIONS | BY | APVD |
|---|---|---|---|---|

CONSULTANT

---
DOUGLAS K. HAMMANN, P.E.
FL # 50589

**VILLAGE OF PALM SPRINGS**

SCADA SYSTEM UPGRADE MAIN WATER TREATMENT PLANT (MAIN WTP)
2021B-003

UNIT PROCESS 8 - LIME PREPARATION - FEED MODIFICATIONS

| | |
|---|---|
| DWG NO. 28 | SHEET I-17 |
| OF 70 | PROJ. NO. 400-077.01 |
| DATE AUGUST 26, 2020 | |

File name: C:\Civil 3D Projects\400-077.01 - Scada System Upgrades Main and R. L. Pratt WTP\01_Working (Main)\400-077.01_I-14-MULTI.dwg; Plotted @: 12/23/2020 1:29:02 PM; Scale multiplier: 0.5; Printed by: Matheus Siqueira; Milestone: BID DOCUMENTS

BID DOCUMENTS

0.5 MG TANK: LI 9-1-1, LAH 9-1-1, LAL 9-1-1
1.0 MG TANK: LI 9-1-2, LAH 9-1-2, LAL 9-1-2
LHH 9-1
LLL 9-1
FI 9-2, FIQ, FIQ
PI 9-2, PAH, PAL
HS 9-1 12/1/2
AI 9-2-1, TAH
AI, XAL, XAH

TANK LEVEL (FT)
TANK LEVEL HIGH
TANK LEVEL LOW
TANK LEVEL (FT)
TANK LEVEL HIGH
TANK LEVEL LOW
GST'S HIGH HIGH
GST'S LOW LOW
DISTRIBUTION SYSTEM FLOW (GPM)
DISTRIBUTION SYSTEM TOTAL FLOW CURRENT DAY GAL X 10000
DISTRIBUTION SYSTEM TOTAL FLOW PREVIOUS DAY GAL X 10000
DISCHARGE PRESSURE (PSI)
HIGH PRESSURE
LOW PRESSURE
ON-LINE TANK SELECTOR (SEE NOTE 2)
FINISH WATER TURBIDITY (NTU)
TURBIDITY ALARM HIGH
FINISHED WATER CL2 RESIDUAL (TOTAL) 0-10 MG/L
TOTAL CHLORINE HIGH
TOTAL CHLORINE LOW

SCADA HMI NETWORK

EN — EH — EN — M | F/O — F/O — CTU

NETWORK FIELD

## NOTES

1) WATER LEVEL ELEVATIONS ARE HYDRAULICALLY INTERCONNECTED AND ARE SAME IN BACKWASH PUMP STATION, 0.5 MG TANK AND 1.0 MG TANK.
2) SELECTION OF ONLINE TANKS:
   12 = BOTH TANKS LEVEL DISPLAYED.
   1 = TANK 1 LEVEL DISPLAYED ONLY.
   2 = TANK 2 LEVEL DISPLAYED ONLY.
3) EXISITNG FLOW AND PRESSURE TO DISTRIBUTION SYSTEM ARE MONITORED VIA PLC-9-2.

CAV-9-2-3A, CAV-9-2-3B, CAV-9-2-4A, CAV-9-2-4B, CAV-9-2-5B, CAV-9-2-5A, CAV-9-2-1A, CAV-9-2-1B, CAV-9-2-2A, CAV-9-2-2B
PI 9-2-X (TYP. FOR PUMPS 3,4,5)
P-9-2-5, P-9-2-4, P-9-2-3, P-9-2-1, P-9-2-2
OVER TEMP (TYP)
(TYP OF 5)
5D, I-12
5E, I-12
5H, I-12
5F, I-12
PAH 9-2-1
PIR 9-2-1
PAL 9-2-1
FIR 9-2
FQI 9-2
FY 9-2 SUM
5G, I-12
MCP
FW
FE
FROM FILTERS
S
CS 4D, I-3
POWER (TYP)
PROP. PLUG
TO EXIST. UP-7
FE 9-3-1
M-9-3-1
W2
PI 9-2-1
PI 9-2-2
ZS 9-2-2
T-9-1-1 0.5 MG
T-9-1-2 1.0 MG
TO LAKE
DR
FCV 9-2-1
LI 9-1-2 LIQUID LEVEL INDICATOR
PIT 9-2-2
PIT 9-2-1 (SA)
PSH 9-2-1
PSL 9-2-1
>80PSI
<40PSI
SA
120V
FP-9-2-1
PI EXISTING PRESSURE INDICATOR IN LAB
FE 9-2-1
FIT 9-2-1
FE 9-2-2
FIT 9-2-2
BYP
AE 9-2-1
AIT 9-2-1
TURB
LOCATED IN EXIST LAB
TO PLC-9-2
FH
M-9-3-2
FE 9-3-2
TO EXIST. UP-2 W2
TO EXIST. UP-2 W2
TO EXIST. UP-4 W2
TO EXIST. UP-4 W2
TO EXIST. UP-5 W2
TO EXIST. UP-6 W2
TO EXIST. UP-8 W2
EXIST. PROCESS WATER (W2) DISTRIBUTION SYSTEM
RPZ-9-1-1
9K, I-05 TO UP-3
9L, I-06 TO UP-3
9M, I-07 TO UP-3
TO UP-3 9J, I-04
TO DISTRIBUTION SYSTEM

**ECKLER ENGINEERING, INC.**
4700 RIVERSIDE DRIVE, SUITE 110 - CORAL SPRINGS, FL 33067
(954) 510-4700 - FAX (954) 755-2741
CA No. 7803

DSGN: D. K. HAMMANN
DR: R.PAEZ
CHK: D. K. HAMMANN
APVD: D. K. HAMMANN
VERIFY SCALE
1"
BAR IS ONE INCH ON ORIGINAL DRAWING. ADJUST SCALES AS NECESSARY.

| No. | DATE | REVISIONS | BY | APVD |
|---|---|---|---|---|

CONSULTANT

DOUGLAS K. HAMMANN, P.E.
FL # 50589

**VILLAGE OF PALM SPRINGS**
SCADA SYSTEM UPGRADE MAIN WATER TREATMENT PLANT (MAIN WTP)
2021B-003

UNIT PROCESS 9 - HFINISHED WATER (STORAGE AND HIGH SERVICE) PUMPING) MODIFICATIONS (SHEET 1)

DWG NO. 29 OF 70
SHEET I-18
PROJ. NO. 400-077.01
DATE AUGUST 26, 2020

File name: C:\Civil 3D Projects\400-077.01 - Scada System Upgrades Main and R. L. Pratt WTP\01_Working (Main)\400-077.01_I-18-MULTI.dwg; Plotted @: 12/23/2020 1:29:09 PM; Scale multiplier: 0.5; Printed by: Matheus Siqueira; Milestone: BID DOCUMENTS

BID DOCUMENTS

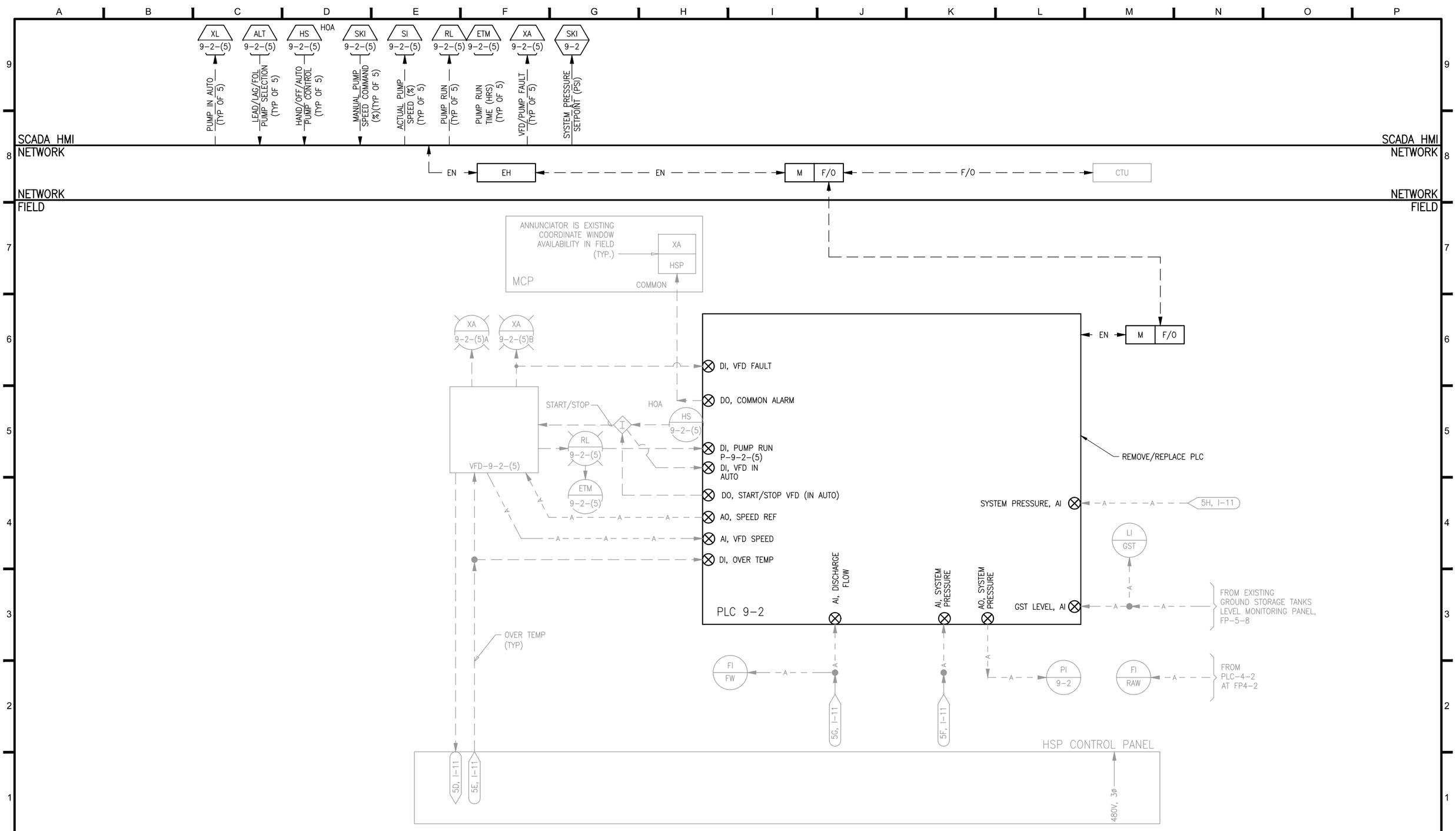



**ECKLER ENGINEERING, INC.**
4700 RIVERSIDE DRIVE, SUITE 110 - CORAL SPRINGS, FL 33067
(954) 510-4700 - FAX (954) 755-2741
CA No. 7803


| | |
|---|---|
| DSGN: | D. K. HAMMANN |
| DR: | R.PAEZ |
| CHK: | D. K. HAMMANN |
| APVD: | D. K. HAMMANN |

VERIFY SCALE
1"
BAR IS ONE INCH ON ORIGINAL DRAWING. ADJUST SCALES AS NECESSARY.

| No. | DATE | REVISIONS | BY | APVD |
|---|---|---|---|---|

CONSULTANT

---
DOUGLAS K. HAMMANN, P.E.
FL # 50589

**VILLAGE OF PALM SPRINGS**

SCADA SYSTEM UPGRADE MAIN WATER TREATMENT PLANT (MAIN WTP)
2021B-003

UNIT PROCESS 9 - FINISHED WATER (STORAGE AND HIGH SERVICE) PUMPING) MODIFICATIONS (SHEET 2)

| | |
|---|---|
| DWG NO. | I-19 |
| SHEET | 30 |
| OF | 70 |
| PROJ. NO. | 400-077.01 |
| DATE | AUGUST 26, 2020 |


File name: C:\Civil 3D Projects\400-077.01 - Scada System Upgrades Main and R. L. Pratt WTP\01_Working (Main)\400-077.01_I-18-MULTI.dwg; Plotted @: 12/23/2020 1:29:10 PM; Scale multiplier: 0.5; Printed by: Matheus Siqueira; Milestone: BID DOCUMENTS


BID DOCUMENTS

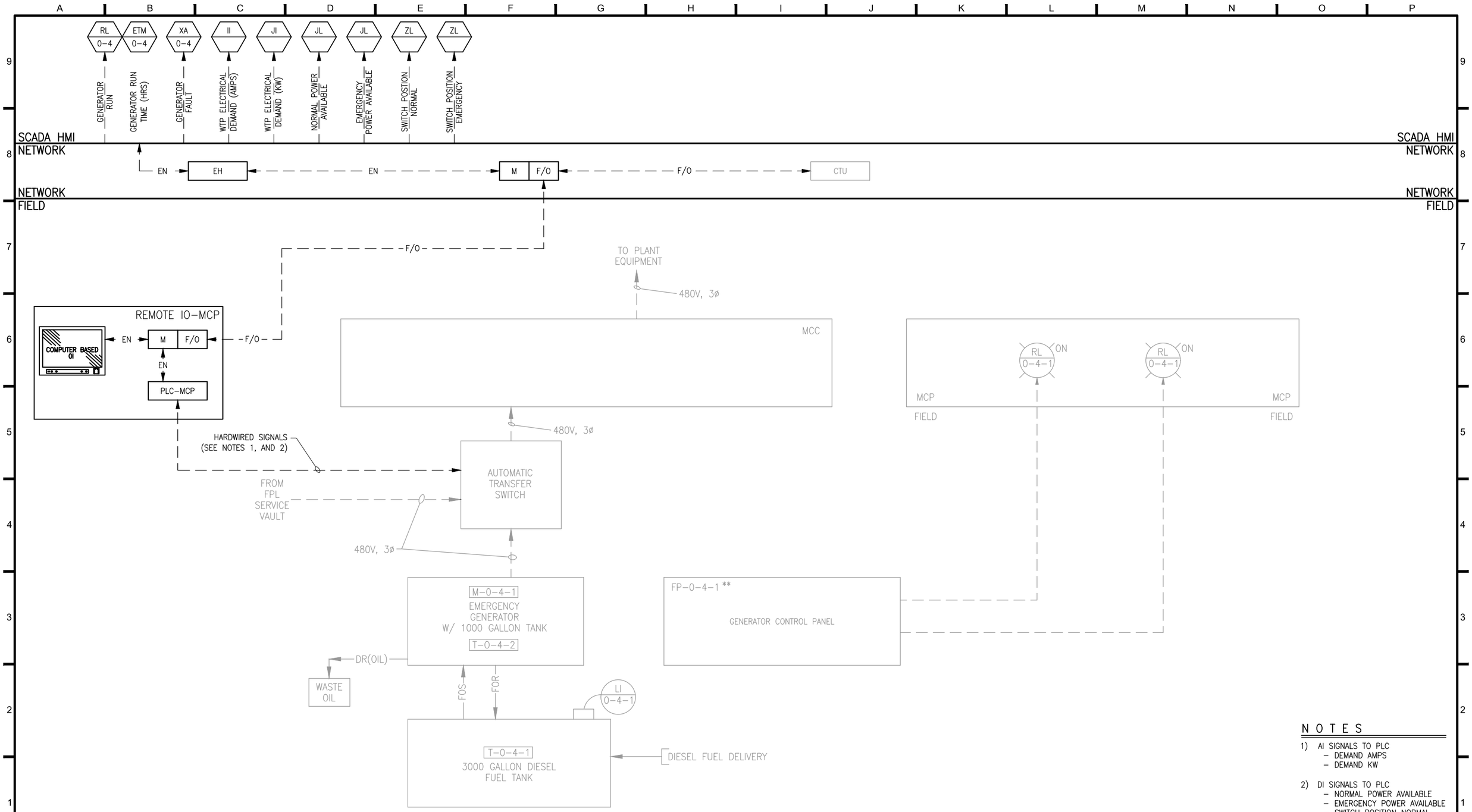


## NOTES

1) AI SIGNALS TO PLC
   - DEMAND AMPS
   - DEMAND KW

2) DI SIGNALS TO PLC
   - NORMAL POWER AVAILABLE
   - EMERGENCY POWER AVAILABLE
   - SWITCH POSITION NORMAL
   - SWITCH POSITION EMERGENCY

**ECKLER ENGINEERING, INC.**
4700 RIVERSIDE DRIVE, SUITE 110 - CORAL SPRINGS, FL 33067
(954) 510-4700 - FAX (954) 755-2741
CA No. 7803

DSGN: D. K. HAMMANN
DR: R.PAEZ
CHK: D. K. HAMMANN
APVD: D. K. HAMMANN

VERIFY SCALE
1"
BAR IS ONE INCH ON ORIGINAL DRAWING. ADJUST SCALES AS NECESSARY.

| No. | DATE | REVISIONS | BY | APVD |
|---|---|---|---|---|

CONSULTANT

----
DOUGLAS K. HAMMANN, P.E.
FL # 50589

**VILLAGE OF PALM SPRINGS**

SCADA SYSTEM UPGRADE MAIN WATER TREATMENT PLANT (MAIN WTP)
2021B-003

UNIT PROCESS 0 - SUPPORT SYSTEMS (EMERGENCY GENERATOR) MODIFICATIONS

DWG NO. 31 OF 70
SHEET I-20
PROJ. NO. 400-077.01
DATE AUGUST 26, 2020

File name: C:\Civil 3D Projects\400-077.01 - Scada System Upgrades Main and R. L. Pratt WTP\01_Working (Main)\400-077.01_I-18-MULTI.dwg; Plotted @: 12/23/2020 1:29:11 PM; Scale multiplier: 0.5; Printed by: Matheus Siqueira; Milestone: BID DOCUMENTS

BID DOCUMENTS

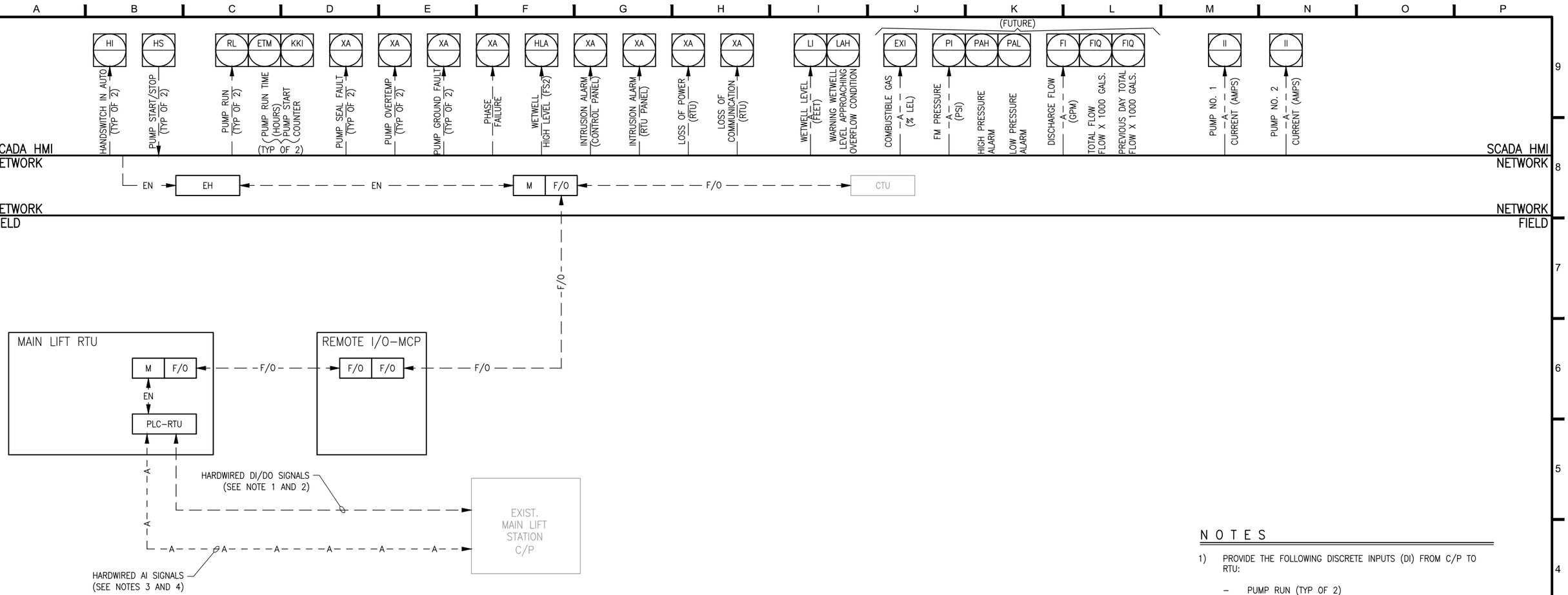


## NOTES

1) PROVIDE THE FOLLOWING DISCRETE INPUTS (DI) FROM C/P TO RTU:
   - PUMP RUN (TYP OF 2)
   - STARTER OL'S (TYP OF 2)
   - PHASE FAILURE
   - WETWELL HIGH LEVEL
   - H-O-A IN AUTO (TYP OF 2)
   - INTRUSION ALARM
   - PUMP SEAL FAILURE (TYP OF 2)
   - PUMP OVERTEMP (TYP OF 2)
   - PUMP GROUND FAULT (TYP OF 2)
   - WETWELL HIGH LEVEL BACKUP (24V DC)
2) PROVIDE THE FOLLOWING DISCRETE OUTPUTS (DO) TO C/P FROM RTU:
   - PUMP CALL (TYP. OF 2)
3) PROVIDE THE FOLLOWING ANALOG IMPUTS (AI) TO RTU:
   - PUMP NO. 1 CURRENT
   - PUMP NO. 2 CURRENT
   - WETWELL LEVEL (FROM RADAR TRANSDUCER)
4) PROVIDE THE FOLLOWING ANALOG OUTPUTS (AO) FROM RTU:
   -
   -

**ECKLER ENGINEERING, INC.**
4700 RIVERSIDE DRIVE, SUITE 110 - CORAL SPRINGS, FL 33067
(954) 510-4700 - FAX (954) 755-2741
CA No. 7803

DSGN: D. K. HAMMANN
DR: R.PAEZ
CHK: D. K. HAMMANN
APVD: D. K. HAMMANN

VERIFY SCALE
1"
BAR IS ONE INCH ON ORIGINAL DRAWING. ADJUST SCALES AS NECESSARY.

| No. | DATE | REVISIONS | BY | APVD |
|---|---|---|---|---|

CONSULTANT

---
DOUGLAS K. HAMMANN, P.E.
FL # 50589

**VILLAGE OF PALM SPRINGS**

SCADA SYSTEM UPGRADE MAIN WATER TREATMENT PLANT (MAIN WTP)
2021B-003

UNIT PROCESS 0 - SUPPORT SYSTEMS (MAIN LIFT STATION) MODIFICATIONS

DWG NO. 32 OF 70
SHEET I-21
PROJ. NO. 400-077.01
DATE AUGUST 26, 2020

File name: C:\Civil 3D Projects\400-077.01 - Scada System Upgrades Main and R. L. Pratt WTP\01_Working (Main)\400-077.01_I-18-MULTI.dwg; Plotted @: 12/23/2020 1:29:12 PM; Scale multiplier: 0.5; Printed by: Matheus Siqueira; Milestone: BID DOCUMENTS

BID DOCUMENTS

## HMI FUNCTION CRITERIA

| DWG | UNIT PROCESS | SCADA HMI TAG # | SCADA HMI TAG DESCRIPTION | HMI FUNCTION CODE | PROCESS VARIABLE | UNIT OF MEASURE | RANGE | ORIGINATING FIELD INSTRUMENT | NOTES |
|---|---|---|---|---|---|---|---|---|---|
| I-02 | 2 | FI-2-1-1 | INFLUENT FLOW SOFTENING UNIT 1 | HMI-1 | FLOW | GPM | 0-1500 | FE-2-1-1 | |
| | | FIQ | | | | GALLONS X1000 | 0-3000 | | |
| | | FIQ | | | | GALLONS X1000 | 0-3000 | | |
| | | FI-2-1-2 | INFLUENT FLOW SOFTENING UNIT 2 | | | GPM | 0-1500 | FE-2-1-2 | |
| | | FIQ | | | | GALLONS X1000 | 0-3000 | | |
| | | FIQ | | | | GALLONS X1000 | 0-3000 | | |
| | | FI-2-1-3 | INFLUENT FLOW SOFTENING UNIT 3 | | | GPM | 0-1500 | FE-2-1-3 | |
| | | FIQ | | | | GALLONS X1000 | 0-3000 | | |
| | | FIQ | | | | GALLONS X1000 | 0-3000 | | |
| | | FI-2 | INFLUENT FLOW TOTAL | HMI-2 | FLOW | GPM | 0-4500 | - | -SUMMATION OF ALL INFLUENT FLOWS<br>-PLANT IN "AUTO" BASIS |
| | | FIQ | | | | GALLONS X1000 | 0-6000 | | |
| | | FIQ | | | | GALLONS X1000 | 0-6000 | | |
| | | HS-2-1-(3) | OPEN/CLOSE VALVE CONTROL | HMI-9 | - | - | - | - | -FLOW CONTROL VALVE (TYP OF 3) |
| | | ZL-2-1-(3) | | | | | | | |
| | | ZL-2-1-(3) | | | | | | | |
| I-09 | 3 | ALT-3-8-(3) | MIEX EFFLUENT VARIABLE SPEED TRANSFER PUMPING SYSTEM | HMI-6 | - | - | - | - | -TOTAL OF 3 PUMPS<br>-ALLOW OPERATION WHEN PLANT IN "AUTO" |
| | | HS-3-8-(3) | | | | | | | |
| | | SKI-3-8-(3) | | | | | | | |
| | | SI-3-8-(3) | | | | | | | |
| | | RL-3-8-(3) | | | | | | | |
| | | ETM-3-8-(3) | | | | | | | |
| | | XL-3-8-(3) | | | | | | | |
| | | XA-3-8-(3) | | | | | | | |
| | | LA-3-8 | LEVEL ALARM | HMI-4 | - | - | - | LSHH-3-8-1<br>LSLL-3-8-1 | -COMMON TO EITHER HIGH HIGH OR LOW LOW |
| | | XA-3-9 | MIEX WASTE PS COMMON FAULT | HMI-4 | - | - | - | FP-3-9 | |
| I-10 | 4 | HS-2-1-(3) | OPEN/CLOSE VALVE CONTROL | HMI-09 | - | - | - | - | -FLOW CONTROL VALVE (TYP OF 3) |
| | | ZL-2-1-(3) | | | | | | | |
| | | ZL-2-1-(3) | | | | | | | |
| | | LI-4-1 | CONTACT BASIN LEVEL | HMI-3 | LEVEL | FEET | 0-20 | LIT-4-4 | |
| | | LHH-4-1 | HIGH LEVEL ALARM | HMI-4 | - | - | - | LSHH-4-4 | |
| | | LLL-4-1 | LOW LEVEL ALARM | | - | - | - | LSLL-4-4 | |
| | | AI-4-1-1 | CL2 RESIDUAL | HMI-5 | CL2 RESIDUAL (FREE) | MG/L | 0-20 | AE/AIT-4-4-1 | |
| | | XAL-4-1-1 | | | | - | - | | |
| | | XAH-4-1-1 | | | | - | - | | |
| | | ALT-4-1-(3) | CONTACT BASIN VARIABLE SPEED TRANSFER PUMPING SYSTEM | HMI-6 | - | - | - | - | -TOTAL OF 3 PUMPS<br>-ALLOW OPERATION WHEN PLANT IN "AUTO" |
| | | HS-4-1-(3) | | | | | | | |
| | | SKI-4-1-(3) | | | | | | | |
| | | SI-4-1-(3) | | | | | | | |
| | | RL-4-1-(3) | | | | | | | |
| | | ETM-4-1-(3) | | | | | | | |
| | | XL-4-1-(3) | | | | | | | |
| | | XA-4-1-(3) | | | | | | | |
| I-11 | 4 | LI-4-2-1 | NAOCL TANK NO.1 | HMI-11 | LEVEL | FEET | 0-XX | LIT-4-2-1 | -MEASURE LEVEL IN FEET<br>-CONVERT TO GALLONS<br>-RE-ORDER BY VOLUME REMAINING |
| | | LI-VOL | | | | GALLONS | 0-XXXX | | |
| | | LI- | | | | - | - | | |
| | | LI-4-2-2 | NAOCL TANK NO.2 | HMI-11 | LEVEL | FEET | 0-XX | LIT-4-2-2 | -MEASURE LEVEL IN FEET<br>-CONVERT TO GALLONS<br>-RE-ORDER BY VOLUME REMAINING |
| | | LI-VOL | | | | GALLONS | 0-XXXX | | |
| | | LI- | | | | - | - | | |
| | | LA-4-2-1 | LEVEL ALARM | HMI-4 | - | - | - | LSH-4-2-1 | -LIQUID IN TANK CONTAINMENT SUMP. |
| I-12 | 4 | YS-4-3-(4) | NAOCL FEED PUMPS (POSITIVE DISPLACEMENT DIAPHRAGM) | HMI-12 | - | - | - | - | -TOTAL OF 4 PUMPS. |
| | | HS-4-3-(4) | | | | | | | |
| | | XA-4-3-(4) | | | | | | | |
| | | RL-4-3-(4) | | | | | | | |
| | | ETM-4-3-(4) | | | | | | | |

## HMI FUNCTION CRITERIA

| DWG | UNIT PROCESS | SCADA HMI TAG # | SCADA HMI TAG DESCRIPTION | HMI FUNCTION CODE | PROCESS VARIABLE | UNIT OF MEASURE | RANGE | ORIGINATING FIELD INSTRUMENT | NOTES |
|---|---|---|---|---|---|---|---|---|---|
| I-12 | 4 | SK-4-3-(4) | NAOCL FEED PUMPS (POSITIVE DISPLACEMENT DIAPHRAGM) | HMI-12 | - | - | - | - | -TOTAL OF 4 PUMPS |
| | | SK-4-3-(4) | | | | | | | |
| | | FI-4-3-(4) | NAOCL FEED MEASUREMENT | HMI-13 | NAOCL FLOW | GH | 0-XX | FE/FIT-0-4-(4) | |
| | | FIQ-4-3-(4) | | | | GPD | 0-XX | | |
| | | FIQ-VOL | | | | GPD | 0-XXX | | |
| | | WIQ-WT | | | | PPD | 0-XXX | | |
| | | FIQ- | | | | LBS | 0-XXX | | |
| | | WIQ- | | | | LBS | 0-XXX | | |
| I-13 | 5 | HS-5-1-(2) | THM STRIPPING TOWER(S) CONSTANT SPEED BLOWER SYSTEM | HMI-7 | - | - | - | - | -TOTAL OF 2 BLOWERS<br>-VIA REMOTE IO-MCP<br>-START ON PLANT IN "AUTO" |
| | | RL-5-1-(2) | | | | | | | |
| | | ETM-5-1-(2) | | | | | | | |
| | | XA-5-1-(2) | | | | | | | |
| | | XAI-5-3-(X) | FILTER EFFLUENT TURBIDITY | HMI-5 | TURBIDITY | NTU | 0-5 | AE/AIT-5-3-(3) | |
| | | AA-5-3-(X) | | | | - | - | | |
| | | AI-5-3 | CL2 RESIDUAL | HMI-5 | CL2 RESIDUAL (FREE) | MG/L | 0-20 | AE/AIT-5-3 | |
| | | XAL-5-3 | | | | - | - | | |
| | | XAH-5-3 | | | | - | - | | |
| | | FI-5-5 | BACKWASH FLOW | HMI-1 | FLOW | GPM | 0-5000 | FE/FIT-5-5-1 | |
| | | FIQ | | | | GAL X1000 | 0-1000 | | |
| | | FIQ | | | | GAL X1000 | 0-1000 | | |
| | | ZL-5-2-(6) | FILTER INFLUENT | HMI-14 | - | - | - | - | |
| | | ZL-5-3-(6) | FILTER EFFLUENT | | | - | - | - | |
| | | ZL-5-4-(6) | FILTER BWASH SUPPLY | | | - | - | - | |
| | | ZL-5-5-(6) | BWD | | | - | - | - | |
| | | ZL-5-6-(6) | FTW | | | - | - | - | |
| | | ZL-5-7-(6) | BACKWASH AIR | | | - | - | - | |
| | | LI-5-3-(6) | WATER LEVEL FILTER(FT) | | | FEET | 0- | LT-5-3-(6)AB | -LEVEL TRANSMITTER SIDES A AND B, MATCH EXISTING RANGE. |
| | | LHA-5-3-(6) | HIGH FILTER WATER LEVEL | | | | | | |
| | | FI-5-1 | BACKWASH AIR | HMI-1 | FLOW | CFM | 0-1000 | ?? | |
| | | QI-5-5-(5)A | FILTER READY | HMI-15 | - | - | - | - | |
| | | QI-5-5-(6)B | FILTER IN BACKWASH | | - | - | - | - | |
| | | HS-5-3-(2) | BWR CONSTANT SPEED PUMP SYSTEM | HMI-7 | - | - | - | - | |
| | | RL-5-3-(2) | | | | | | | |
| | | ETM-5-3-(2) | | | | | | | |
| | | XA-5-3-(2) | | | | | | | |
| I-14 | 5 | LI-5-8 | GST LEVEL | HMI-3 | LEVEL | FEET | 0-15 | | -COMBINED |
| | | LAH-5-8 | | | | - | - | | |
| | | LAL-5-8 | | | | - | - | | |
| | | LHH-5-8 | HIGH HIGH LEVEL ALARM | HMI-4 | - | - | - | LSHH-5-8 OR LSH-5-8 | |
| | | LLL-5-8 | LOW LOW LEVEL ALARM | | - | - | - | LSLL-5-8 OR LSL-5-8 | |
| | | FI-5-5 | FILTER BACKWASH FLOW | HMI-1 | FLOW | GPM | 0-5000 | FE/FIT-5-5-1 | |
| | | FIQ | | | | GAL X1000 | 0-1000 | | |
| | | FIQ | | | | GAL X1000 | 0-1000 | | |
| | | FI-0-1 | FILTER BACKWASH AIR FLOW | HMI-1 | FLOW | CFM | 0-1000 | FE/FIT-0-1 | |
| | | FIQ-0-1 | | | | CFM | | | |
| | | FIQ-0-1 | | | | CFM | | | |
| I-15 | 6 | HS-6-1-(2) | OPEN/CLOSE VALVE CONTROL | HMI-9 | - | - | - | - | -AMMONIATORS, SET UP FOR FUTURE USE. |
| | | ZL-6-1-(2) | | | | | | | |
| | | HS-6-2-(3) | CONSTANT SPEED PUMP SYSTEM | HMI-7 | - | - | - | - | -HMPS PUMPS FOR FUTURE USE |
| | | RL-6-2-(3) | | | | | | | |
| | | ETM-6-2-(3) | | | | | | | |
| | | XA-6-2-(3) | | | | | | | |


**ECKLER ENGINEERING, INC.**
4700 RIVERSIDE DRIVE, SUITE 110 - CORAL SPRINGS, FL 33067
(954) 510-4700 - FAX (954) 755-2741
CA No. 7803


DSGN: D. K. HAMMANN
DR: R.PAEZ
CHK: D. K. HAMMANN
APVD: D. K. HAMMANN

VERIFY SCALE
1"
BAR IS ONE INCH ON ORIGINAL DRAWING. ADJUST SCALES AS NECESSARY.

| No. | DATE | REVISIONS | BY | APVD |
|---|---|---|---|---|

CONSULTANT


----
DOUGLAS K. HAMMANN, P.E.
FL # 50589


**VILLAGE OF PALM SPRINGS**
SCADA SYSTEM UPGRADE MAIN WATER TREATMENT PLANT (MAIN WTP)
2021B-003

HMI FUNCTION CRITERIA TABLES (SHEET 1)

DWG NO. 33 | SHEET I-22
OF 70 | PROJ. NO. 400-077.01
DATE AUGUST 26, 2020


File name: C:\Civil 3D Projects\400-077.01 - Scada System Upgrades Main and R. L. Pratt WTP\01_Working (Main)\400-077.01_I-18-MULTI.dwg; Plotted @: 12/23/2020 1:29:14 PM; Scale multiplier: 0.5; Printed by: Matheus Siqueira; Milestone: BID DOCUMENTS


BID DOCUMENTS

## HMI FUNCTION CRITERIA

| DWG | UNIT PROCESS | SCADA HMI TAG # | SCADA HMI TAG DESCRIPTION | HMI FUNCTION CODE | PROCESS VARIABLE | UNIT OF MEASURE | RANGE | ORIGINATING FIELD INSTRUMENT | NOTES |
|---|---|---|---|---|---|---|---|---|---|
| I-16 | 7 | HS-7-2-(2) | BWR CONSTANT SPEED PUMP SYSTEM | HMI-7 | – | – | – | – | -TOTAL OF 2 PUMPS<br>-VIA REMOTE IO-WWR |
| | | LR-7-2-(2) | | | | | | | |
| | | ETM-7-2-(2) | | | | | | | |
| | | XA-7-2-(2) | BWR CONSTANT SPEED PUMP SYSTEM | HMI-7 | | | | | -TOTAL OF 2 PUMPS.<br>-VIA REMOTE IO-WWR |
| I-17 | 8 | XA-8-2 | COMMON ALARM | HMI-4 | – | – | – | MCP | -VIA REMOTE IO-MCP |
| | | HS-8-4-(4) | VARIABLE SPEED LIME SLURRY FEED PUMPS | HMI-6 | – | – | – | – | -TOTAL 1 OF 4 PUMPS. |
| | | SKI-8-4-(4) | | | | | | | |
| | | SI-8-4-(4) | | | | | | | |
| | | RL-8-4-(4) | | | | | | | |
| | | ETM-8-4-(4) | | | | | | | |
| | | XL-8-4-(4) | | | | | | | |
| I-18 | 9 | HS-9-1 | TANK SELECTOR | HMI-2 | – | – | – | – | -SELECT ON-LINE TANKS. |
| | | LI-9-1-1 | GST LEVEL | HMI-3 | LEVEL | FEET | 0-15 | LT-5-8 | -COMBINED |
| | | LAH-9-1-1 | | | | – | – | | |
| | | LAL-9-1-1 | | | | – | – | | |
| | | LI-9-1-2 | GST LEVEL | | LEVEL | FEET | 0-15 | LT-5-8 | -COMBINED |
| | | LAH-9-1-2 | | | | – | – | | |
| | | LAL-9-1-2 | | | | – | – | | |
| | | LHH-9-1 | HIGH HIGH LEVEL ALARM | HMI-4 | – | – | – | LSHH-5-8 | -COMBINED |
| | | LLL-9-1 | LOW LOW LEVEL ALARM | | – | – | – | LSLL-5-8 | -COMBINED |
| | | FI-9-2 | DISTRIBUTION FLOW TOTAL | HMI-2 | FLOW | GPM | 0-6000 | FE/FIT-9-2 AND FE/FIT-9-2 | -SUMMATION OF FLOWS TO DISTRIBUTION SYSTEM.<br>-SUMMED AT HSP PLC |
| | | FIQ | | | | GAL X1000 | 0-8000 | | |
| | | FIQ | | | | GAL X1000 | 0-8000 | | |
| | | AI-9-2-1 | FILTER EFFLUENT TURBIDITY | HMI-5 | TURBIDITY | NTU | 0-5 | AE/AIT-9-2-1 | |
| | | TAH-9-2-1 | | | | – | – | | |
| | | AI-9-2-2 | CL2 RESIDUAL | HMI-5 | CL2 RESIDUAL (TOTAL) | MG/L | 0-20 | AE/AIT-9-2-2 | |
| | | XAL-9-2-2 | | | | – | – | | |
| | | XAH-9-2-2 | | | | – | – | | |
| | | PI-9-2 | DISTRIBUTION SYSTEM PRESSURE | HMI-8 | PRESSURE (GAUGE) | PSI | 0-100 | PIT-9-2-2 | |
| | | PAH | | | | – | – | | |
| | | PAL | | | | – | – | | |
| | | AI-5-3-1 | CL2 RESIDUAL | HMI-5 | CL2 RESIDUAL (FREE) | MG/L | 0-20 | AE/AIT-5-3 | |
| | | XAL-5-3-1 | | | | – | – | | |
| | | XAH-5-3-1 | | | | – | – | | |
| I-19 | 9 | ALT-9-2-(5) | VARIABLE SPEED HIGH SERVICE PUMPING SYSTEM | HMI-6 | – | – | – | – | -TOTAL OF 5 PUMPS |
| | | HS-9-2-(5) | | | | | | | |
| | | SKI-9-2-(5) | | | | | | | |
| | | SI-9-2-(5) | | | | | | | |
| | | RL-9-2-(5) | | | | | | | |
| | | ETM-9-2-(5) | | | | | | | |
| | | XL-9-2-(5) | | | | | | | |
| | | XA-9-2-(5) | | | | | | | |
| | | SKI-9-2 | | | | | | | |

## HMI FUNCTION CRITERIA

| DWG | UNIT PROCESS | SCADA HMI TAG # | SCADA HMI TAG DESCRIPTION | HMI FUNCTION CODE | PROCESS VARIABLE | UNIT OF MEASURE | RANGE | ORIGINATING FIELD INSTRUMENT | NOTES |
|---|---|---|---|---|---|---|---|---|---|
| I-20 | 0 | RL-0-4 | GENERATOR RUN | HMI-10 | – | – | – | – | |
| | | ETM-0-4 | | | | | | | |
| | | II | WTP ELECTRICAL DEMAND | HMI-5 | CURRENT | AMPS | 0-?? | ATS | |
| | | JI | WTP ELECTRICAL DEMAND | | WATTS | KW | 0-?? | ATS | |
| | | JL | NORMAL POWER AVAILABLE | HMI-4 | – | – | – | ATS | |
| | | JL | EMERGENCY POWER AVAILABLE | | – | – | – | ATS | |
| | | ZL | ATS POSITION NORMAL | | – | – | – | ATS | |
| | | ZL | ATS POSITION EMERGENCY | | – | – | – | ATS | |
| | | XA-0-4 | GENERATOR FAULT | | – | – | – | – | |


**ECKLER ENGINEERING, INC.**
4700 RIVERSIDE DRIVE, SUITE 110 - CORAL SPRINGS, FL 33067
(954) 510-4700 - FAX (954) 755-2741
CA No. 7803


DSGN: D. K. HAMMANN
DR: R.PAEZ
CHK: D. K. HAMMANN
APVD: D. K. HAMMANN

VERIFY SCALE
1"
BAR IS ONE INCH ON ORIGINAL DRAWING. ADJUST SCALES AS NECESSARY.

| No. | DATE | REVISIONS | BY | APVD |
|---|---|---|---|---|

CONSULTANT

---
DOUGLAS K. HAMMANN, P.E.
FL # 50589

**VILLAGE OF PALM SPRINGS**
SCADA SYSTEM UPGRADE MAIN WATER TREATMENT PLANT (MAIN WTP)
2021B-003

HMI FUNCTION CRITERIA TABLES (SHEET 2)

DWG NO. 34 OF 70
SHEET I-23
PROJ. NO. 400-077.01
DATE AUGUST 26, 2020


File name: C:\Civil 3D Projects\400-077.01 - Scada System Upgrades Main and R. L. Pratt WTP\01_Working (Main)\400-077.01_I-18-MULTI.dwg; Plotted @: 12/23/2020 1:29:15 PM; Scale multiplier: 0.5; Printed by: Matheus Siqueira; Milestone: BID DOCUMENTS


BID DOCUMENTS

NOTES:

1) PROVIDE SST OR F.R.P. 1-5/8" UNISTRUT WITH SST BOLTS AND NUTS WHERE REQUIRED TO OFFSET INSTRUMENT MOUNT FROM WALL.

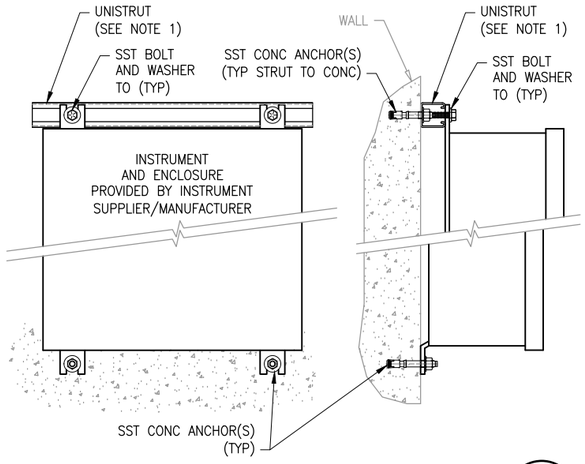


## WALL MOUNTED INSTRUMENT/ELECTRICAL ENCLOSURE INSTALLATION

502

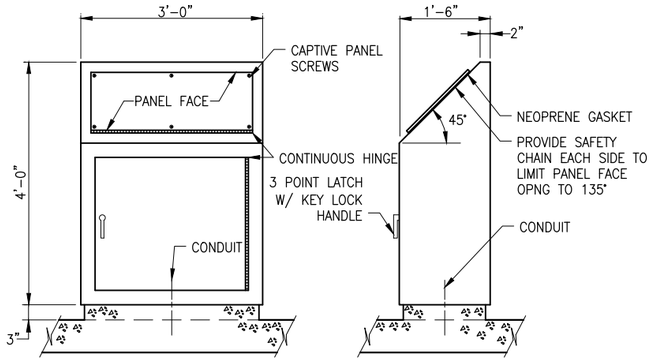


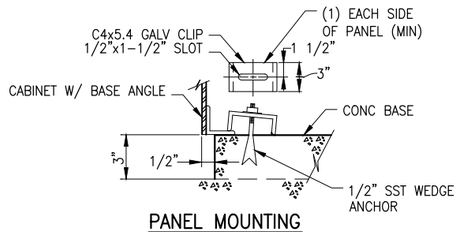


PANEL MOUNTING

## FILTER CONSOLE

508

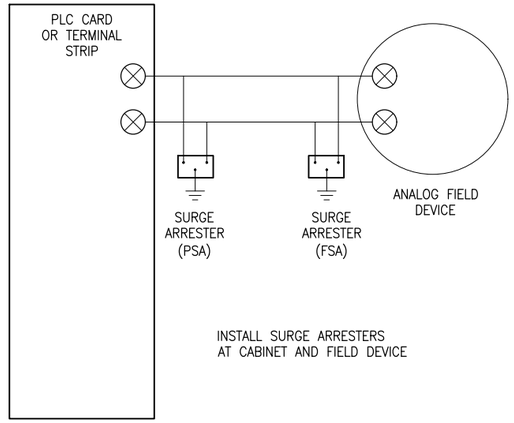


## FIELD INSTRUMENT LIGHTNING SURGE ARRESTER SYSTEM

530


ECKLER ENGINEERING, INC.
4700 RIVERSIDE DRIVE, SUITE 110 - CORAL SPRINGS, FL 33067
(954) 510-4700 - FAX (954) 755-2741
CA No. 7803


DSGN: D. K. HAMMANN
DR: R.PAEZ
CHK: D. K. HAMMANN
APVD: D. K. HAMMANN

VERIFY SCALE
1"
BAR IS ONE INCH ON ORIGINAL DRAWING. ADJUST SCALES AS NECESSARY.

| No. | DATE | REVISIONS | BY | APVD |
|---|---|---|---|---|

CONSULTANT

---
DOUGLAS K. HAMMANN, P.E.
FL # 50589

**VILLAGE OF PALM SPRINGS**

SCADA SYSTEM UPGRADE MAIN WATER TREATMENT PLANT (MAIN WTP)
2021B-003

STANDARD DETAILS - INSTRUMENTATION AND CONTROLS

DWG NO. 35 OF 70
SHEET ID-01
PROJ. NO. 400-077.01
DATE AUGUST 26, 2020


File name: C:\Civil 3D Projects\400-077.01 - Scada System Upgrades Main and R. L. Pratt WTP\01_Working (Main)\400-077.01_ID-00.dwg; Plotted @: 12/23/2020 1:29:21 PM; Scale multiplier: 0.5; Printed by: Matheus Siqueira; Milestone: BID DOCUMENTS


BID DOCUMENTS

# ELECTRICAL LEGEND

- RACEWAY EXPOSED
- RACEWAY CONCEALED
- LIGHTING RACEWAY EXPOSED
- LIGHTING RACEWAY CONCEALED
- RACEWAY TURNED UP / DOWN
- MOTOR (HP), WELL PUMP (HP)
- TRANSFORMER, WET / DRY
- FUSE
- CIRCUIT BREAKER
- CAPACITOR
- ON–OFF SWITCH
- LIGHTNING ARRESTOR
- DISCONNECT SWITCH
- GROUND SYMBOL
- CONTACT, NORMALLY OPEN, W/ NEMA SIZE INDICATED
- CONTACT, NORMALLY CLOSED, W/ NEMA SIZE INDICATED
- LEVEL SWITCH, FLOAT, SINGLE POLE SINGLE THROW
- LEVEL SWITCH, FLOAT, SINGLE POLE DOUBLE THROW
- PRESSURE SWITCH
- LIMIT SWITCH
- THERMAL SWITCH
- PILOT LIGHT
- HEATER
- ELAPSE TIME METER
- SELECTOR SWITCH
- PUSH BUTTON
- RED. MAINTAINED BUTTON
- TIMING CONTACT
- FLOW SWIITCH
- CONTROL RELAY, MOTOR
- ETHERNET SYMBOL
- BONDING
- GFW
- FROM THIS POINT
- STARTER, COMBINATION
- STARTER MANUAL
- SOLENOID VALVE
- MOTOR OPERATED VALVE

- LIGHT, SURFACE / WALL MOUNTED
- EMERGENCY LIGHT, WALL / CEILING MOUNTED
- LIGHT, WALL PACK
- EXIT LIGHT, WALL OR CEILING MOUNTED
- LIGHT FIXTURE, FLUORESCENT, HANGING / SURFACE MOUNTED
- LIGHT FIXTURE, FLUORESCENT, 2x4 LAY–IN GRID SYSTEM
- LIGHT FIXTURE, FLUORESCENT, 2x4 HANGING / SURFACE MOUNTED
- LIGHT, POLE MOUNTED
- PANELBOARD, ELECTRIC / LIGHTING
- METER CAN
- TRANSFORMER
- EXHAUST FAN, CEILING MOUNTED
- RECEPTACLE, SIMPLEX 14" A.F.F.
- RECEPTACLE, DUPLEX 14" A.F.F.
- RECEPTACLE, DUPLEX FLUSH W/ FLOOR
- RECEPTACLE, DUPLEX GFI
- RECEPTACLE, DUPLEX WEATHER PROOF
- RECEPTACLE, CEILING MOUNTED
- RECEPTACLE, QUAD
- RECEPTACLE, SPECIAL OUTLET AS REQUIRED
- SWITCH, SINGLE POLE, 48" A.F.F.
- SWITCH, TWO POLE, 48" A.F.F.
- SWITCH, THREE POLE, 48" A.F.F.
- TELEPHONE JACK
- JUNCTION BOX
- SMOKE DETECTOR
- CARBON MONOXIDE DETECTOR
- HEAT DETECTOR
- GAS DETECTOR
- FLOOD DETECTOR
- CIRCUIT TAG, PANELBOARD "A", CIRCUIT 1 & 3
- CONDUIT TAG, REFER TO RISER OR ONE–LINE DIAGRAM
- CONDUIT TAG, MULTIPLE RUNS, SHOW W/ SINGLE LINE FORMAT

AFF ABOVE FINISHED FLOOR
AL ALARM LIGHT
AS AMP SWITCH
ATS AUTOMATIC TRANSFER SWITCH
CB CIRCUIT BREAKER
CCB CONTROL CIRCUIT BREAKER
CCBL CONDUCTOR CABLE
CPB CONTROLS PULL BOX
CR CONTROL RELAY
C&W CONDUIT & WIRE
C/P CONTROL PANEL
C/S CONTROL STATION
DISC DISCONNECT SWITCH
DPST DOUBLE POLE SINGLE THROW
ETM ELAPSED TIME METER
FT FLOW TRANSMITTER
FIT FLOW INDICATING TRANSMITTER
FOL1 FOLLOW 1 PUMP
FPB FLUSH PULL BOX
FVNR FULL VOLTAGE NON–REVERSING
FVR FULL VOLTAGE REVERSING
FV,2S,2W FULL VOLTAGE, 2 SPEED, 2 WINDING
GFI GROUND FAULT INTERRUPTER
GST GROUND STORAGE TANK
HOA HOND–OFF–AUTO
HOR HAND–OFF–REMOTE
IPB INSTRUMENTATION PULL BOX
ISO ISOLATOR
LA LIGHTNING ARRESTOR
LC LIGHTNING CONTRACTOR
LEAD LEAD PUMP
LS LEVEL SWITCH
M MOTOR STARTER
MCC MOTOR CONTROL CENTER
MCP MOTOR CONTROL PANEL
MLO MAIN LUG ONLY
OL OVER LOAD RELAY
PB PUSH BUTTON
PLC PROGRAMMABLE LOGIC CONTROLLER
PM PHASE MONITOR
PNLB PANEL BOARD
PPB POWER PULL BOX
PS PRESSURE SWITCH
R,G,A RED, GREEN, AMBER PILOT LIGHT
REC RECORDER
RIC RELAY INTERFACE CABINET
R/O READ OUT
SC SURGE CAPACITOR
SPB SIGNAL PULL BOX
SS SELECTOR SWITCH, 316 SST
TC TIME CLOCK
TD TIME DELAY
TH THERMOSTAT
TOT TOTALIZER
TS TEST SWITCH
TX TRANSFORMER
VJB VIDEO JUNCTION BOX
W/P WEATHER PROOF
WW WIRE WAY
PL PLATE
PLCS PLACES
WM WATER MAIN

# MATERIAL SCHEDULE

| LOCATION | CONDUIT | ENCLOSURE MATERIALS | ENCLOSURE NEMA RATING | FASTENERS, STRUT, THREADED ROAD, ETC. | REMARKS |
|---|---|---|---|---|---|
| **INTERIOR** | | | | | |
| EXPOSED IN AIR CONDITIONED EQUIPMENT ROOMS | PVC SCH 80 | PAINTED STEEL | 1, GASKETED | GALVANIZED STEEL | |
| EXPOSED IN PUMP ROOMS, EQUIPMENT ROOMS, ETC. (NOT AIR CONDITIONED) | PVC SCH 80 | 316 STAINLESS STEEL | 3R, MODIFIED NEMA 12 | 316 STAINLESS STEEL | |
| EXPOSED IN CHEMICAL ROOMS, ETC. | PVC SCH 80 | FRP | 4X | FRP | |
| CONCEALED IN OFFICES, CONTROL ROOMS, ATTICS, ETC. | ELECTRICAL METALLIC TUBING, GALVANIZED STEEL | PAINTED STEEL | 1 | GALVANIZED STEEL | |
| CONCEALED IN BLOCK WALLS, POURED CONCRETE WALLS, ETC. | PVC SCH 40 | N/A | N/A | GALVANIZED STEEL | |
| **EXTERIOR** | | | | | |
| BELOW GRADE | PVC SCH 40 | CONCRETE BOXES | N/A | 316 STAINLESS STEEL | |
| ABOVE GRADE | PVC SCH 80 | 316 STAINLESS STEEL | 4X | 316 STAINLESS STEEL | (SEE NOTE 4) |

GENERAL NOTES

1. THE SCHEDULE SHALL ESTABLISH THE MINIMUM LEVEL OF QUALITY FOR MATERIALS, UNLESS OTHERWISE INDICATED BY THE DRAWINGS OR NOTED IN THE SPECIFICATIONS.
2. THE SCHEDULE SHALL NOT APPLY TO POWER TRANSFORMERS, LIGHT FIXTURES AND LIGHT POLES. THESE ELEMENTS ARE NOTED OR INDICATED ELSEWHERE.
3. PVC COATED RGS WHERE NOTED OR INDICATED ON DRAWINGS.

# CONDUIT / RACEWAY IDENTIFICATION LEGEND

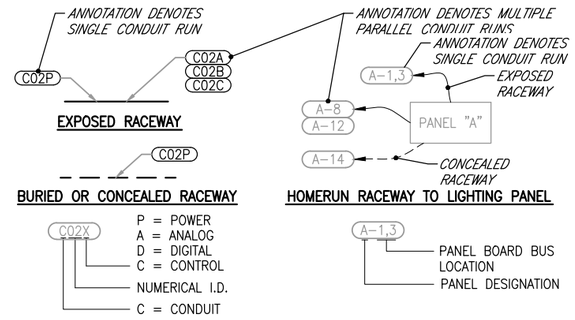


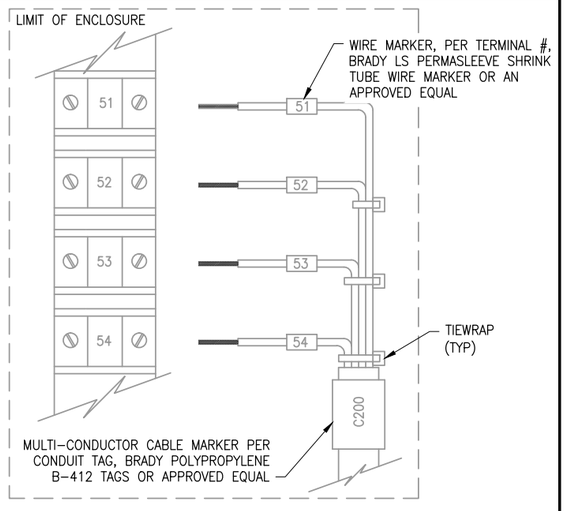


## TERMINATION EXAMPLE DETAIL

SCALE : N.T.S.

# GENERAL ELECTRICAL NOTES

1) ALL CONDUITS AND WIRE SHALL BE LABELED PER STANDARD DETAILS.
2) THE CONTRACTOR SHALL VERIFY EXACT LOCATION OF ELECTRICAL ENCLOSURES AND CONDUIT ENTRANCES OF ALL EQUIPMENT AGAINST APPROVED SHOP DRAWINGS BEFORE STUBBING UP CONDUITS.
3) CONDUIT FOR FUTURE EQUIPMENT OR EXTENSION SHALL BE TERMINATED AS SHOWN IN DETAILS OR AS SPECIFIED. ALL EXPOSED CONDUIT STUB UPS SHALL BE CAPPED.
4) CONNECTION BETWEEN RIGID CONDUIT AND MOTOR TERMINAL BOX SHALL BE LIQUID–TIGHT FLEXIBLE METAL CONDUIT.
5) EXPOSED CONNECTIONS SHALL BE LIQUID–TIGHT FLEXIBLE METAL CONDUIT WITH APPROVED GROUNDING FITTINGS AND SHALL NOT EXCEED 30" IN LENGTH FOR 2" SIZE FITTINGS AND LARGER. MAXIMUM LENGTH OF 18" FOR SIZES 1" AND SMALLER.
6) CONDUITS TERMINATING AT SWITCHBOARD, MOTOR CONTROL CENTER, POWER PANELS, CONTROL CABINETS, ETC., SHALL BE EQUIPPED WITH A GROUNDING BUSHING 'OZ' TYPE 'GB' AND GROUNDED AS INDICATED ON DRAWINGS OR PER NEC SECTION ARTICLE 250.
7) EQUIPMENT SHALL BE INSTALLED IN ACCORDANCE WITH APPROVED SHOP DWG, ADJUSTMENT OR ALTERATIONS SHALL BE MADE WITH ENGINEERS APPROVAL.
8) MOTOR CONTROL CENTERS, SWITCHBOARDS, SWITCHGEAR AND ALL FREE STANDING PANELS SHALL BE SET ON CONCRETE HOUSEKEEPING PAD AS SHOWN IN DETAILS, UNLESS OTHERWISE INDICATED.
9) IN CASE OF INTERFERENCE BETWEEN ELECTRICAL EQUIPMENT SHOWN ON THE DRAWINGS AND OTHER EQUIPMENT OR CONFLICTS, THE CONTRACTOR SHALL NOTIFY THE ENGINEER IN WRITING AND THE ENGINEER SHALL REVIEW THE PROPOSED CHANGES BEFORE THEY ARE MADE.
10) ALL OUTDOOR DEVICES SHALL BE "IN–USE" WEATHERPROOF.
11) ALL RECEPTACLES IN OUTDOOR OR ANTICIPATED WET AREAS SHALL BE GROUND FAULT INTERRUPTER RECEPTACLES.
12) ALL RECEPTACLES SHALL BE MOUNTED 14" ABOVE FLOOR SURFACE UNLESS OTHERWISE INDICATED.
13) LOCATION OF PULLBOXES ARE APPROXIMATE. CONTRACTOR SHALL COORDINATE EXACT LOCATION OF PULL BOXES WITH MECHANICAL PIPING AND/OR OTHER SITE WORK. ANY FIELD ADJUSTMENTS SHALL BE AT NO ADDITIONAL COST TO THE OWNER.
14) CONTRACTOR SHALL PROVIDE PULLBOXES WHERE THEY ARE REQUIRED TO MAKE A WORKABLE INSTALLATION WHETHER INDICATED BY DRAWINGS OR NOT.
15) SEE SPECIFICATIONS DIVISION 16 FOR ADDITIONAL NOTES AND REQUIREMENTS.
16) CONTRACTOR SHALL DUCT SEAL ALL ELECTRICAL CONDUITS ENTERING CONTROL PANELS, SWITCHBOARDS, PANEL BOARDS, SAFETY SWITCHES AND THE LIKE. DUCT SEAL SHALL ALSO BE APPLIED TO CONDUITS ENTERING CHEMICAL AREAS SUCH AS CHLORINE ROOMS AND THE LIKE TO PROHIBIT GAS MICRATION TO OTHER AREAS. DUCT SEAL SHALL BE APPLIED TO CONDUITS AT BOTH ENDS. DUCT SHALL BE PUG DUCT SEAL BY GB ELECTRICAL OR EQUAL.


**ECKLER ENGINEERING, INC.**
4700 RIVERSIDE DRIVE, SUITE 110 - CORAL SPRINGS, FL 33067
(954) 510-4700 - FAX (954) 755-2741
CA No. 7803


DSGN: D.K.HAMMANN
DR: M.SIQUEIRA
CHK: D. K. HAMMANN
APVD: D. K. HAMMANN

VERIFY SCALE
1"
BAR IS ONE INCH ON ORIGINAL DRAWING. ADJUST SCALES AS NECESSARY.

| No. | DATE | REVISIONS | BY | APVD |
|---|---|---|---|---|


C & W engineering
ELECTRICAL CONSULTANTS
2775 VISTA PARKWAY, SUITE G–6, WPB, FL. 33411
(561) 642–5333 FAX (561) 966–2293
EMAIL: CWEng@CWEng.US
LICENCE NO. CA0006245
CONSULTANT

MICHAEL A. GUIDA, P.E.
FL #60755


**VILLAGE OF PALM SPRINGS**

SCADA SYSTEM UPGRADE MAIN WATER TREATMENT PLANT (MAIN WTP)
2021B-003

ELECTRICAL NOTES AND LEGENDS

DWG NO. 36 OF 70
SHEET E-01
PROJ. NO. 400-077.01
DATE AUGUST 26, 2020


File name: C:\Civil 3D Projects\400-077.01 - Scada System Upgrades Main and R. L. Pratt WTP\01_Working (Main)\400-077.01_E-01-MULTI.dwg; Plotted @: 12/23/2020 1:29:30 PM; Scale multiplier: 0.5; Printed by: Matheus Siqueira; Milestone: BID DOCUMENTS


BID DOCUMENTS

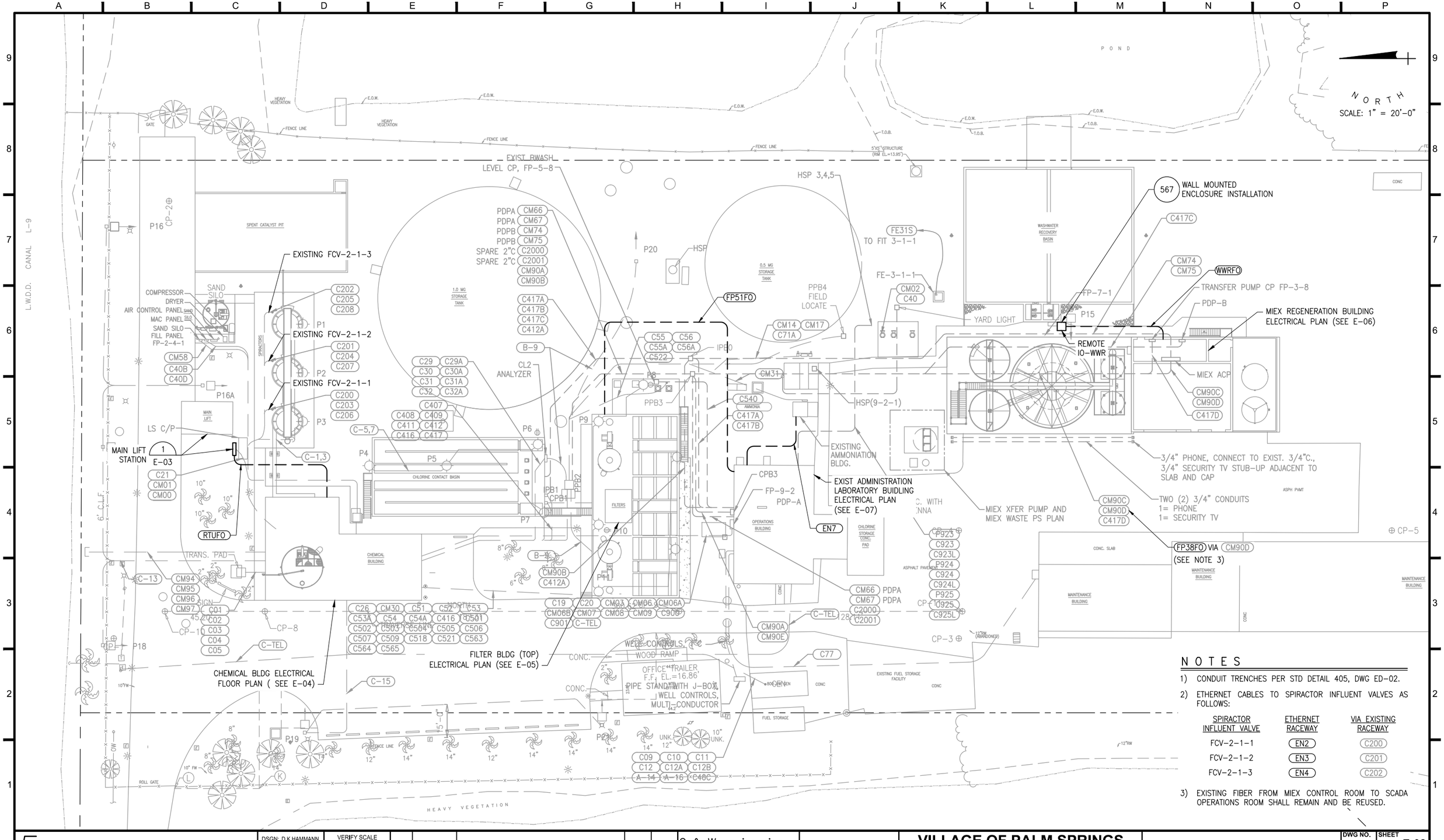


## NOTES

1) CONDUIT TRENCHES PER STD DETAIL 405, DWG ED-02.
2) ETHERNET CABLES TO SPIRACTOR INFLUENT VALVES AS FOLLOWS:

| SPIRACTOR INFLUENT VALVE | ETHERNET RACEWAY | VIA EXISTING RACEWAY |
|---|---|---|
| FCV-2-1-1 | EN2 | C200 |
| FCV-2-1-2 | EN3 | C201 |
| FCV-2-1-3 | EN4 | C202 |

3) EXISTING FIBER FROM MIEX CONTROL ROOM TO SCADA OPERATIONS ROOM SHALL REMAIN AND BE REUSED.


**ECKLER ENGINEERING, INC.**
4700 RIVERSIDE DRIVE, SUITE 110 - CORAL SPRINGS, FL 33067
(954) 510-4700 - FAX (954) 755-2741
CA No. 7803


| | |
|---|---|
| DSGN: | D.K.HAMMANN |
| DR: | M.SIQUEIRA |
| CHK: | D. K. HAMMANN |
| APVD: | D. K. HAMMANN |

VERIFY SCALE
1"
BAR IS ONE INCH ON ORIGINAL DRAWING. ADJUST SCALES AS NECESSARY.

| No. | DATE | REVISIONS | BY | APVD |
|---|---|---|---|---|


C & W engineering
ELECTRICAL CONSULTANTS
2775 VISTA PARKWAY, SUITE G-6, WPB, FL. 33411
(561) 642-5333 FAX (561) 966-2293
EMAIL: CWEng@CWEng.US
LICENCE NO. CA0006245
CONSULTANT

----
MICHAEL A. GUIDA, P.E.
FL #60755


# VILLAGE OF PALM SPRINGS

SCADA SYSTEM UPGRADE MAIN WATER TREATMENT PLANT (MAIN WTP)
2021B-003

ELECTRICAL SITE PLAN

DWG NO. 37 OF 70 | SHEET E-02 | PROJ. NO. 400-077.01 | DATE AUGUST 26, 2020


File name: C:\Civil 3D Projects\400-077.01 - Scada System Upgrades Main and R. L. Pratt WTP\01_Working (Main)\400-077.01_E-01-MULTI.dwg; Plotted @: 12/23/2020 1:29:34 PM; Scale multiplier: 0.5; Printed by: Matheus Siqueira; Milestone: BID DOCUMENTS


BID DOCUMENTS

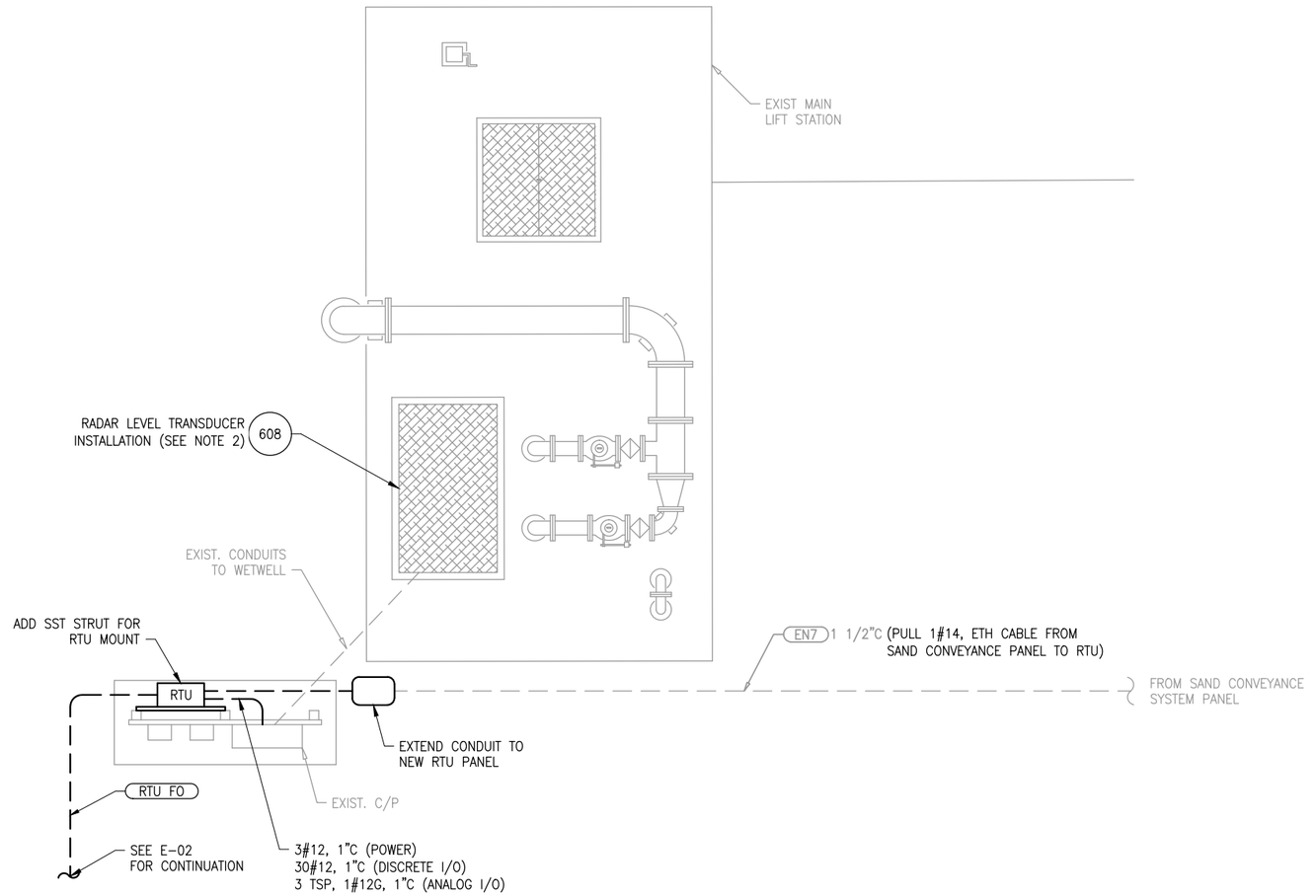


NORTH

## NOTES

1) NEW CONDUIT AND WIRE FOR POWER AND I/O FROM EXISTING CONTROL PANEL TO NEW RTU.
2) INSTALL RADAR LEVEL TRANSDUCER IN WETWELL ROUTE CABLE VIA EXISTING CONDUITS TO EXISTING CONTROL PANEL, THEN TO RTU.
3) WIRING AND CONDUIT TO BE CONFIRMED BY CONTRACTOR.
4) EXISTING CONTROL PANEL REVISIONS PER APPROVED SHOP DRAWINGS.
5) FURNISH AND INSTALL 1P-20A BREAKER IN EXISTING CONTROL PANEL FOR RTU POWER SUPPLY.

## MAIN LIFT STATION

SCALE: 3/8" = 1'-0"

1


**ECKLER ENGINEERING, INC.**
4700 RIVERSIDE DRIVE, SUITE 110 - CORAL SPRINGS, FL 33067
(954) 510-4700 - FAX (954) 755-2741
CA No. 7803


| | |
|---|---|
| DSGN: | D.K.HAMMANN |
| DR: | M.SIQUEIRA |
| CHK: | D. K. HAMMANN |
| APVD: | D. K. HAMMANN |

VERIFY SCALE
1"
BAR IS ONE INCH ON ORIGINAL DRAWING. ADJUST SCALES AS NECESSARY.

| No. | DATE | REVISIONS | BY | APVD |
|---|---|---|---|---|


C & W engineering
ELECTRICAL CONSULTANTS
2775 VISTA PARKWAY, SUITE G-6, WPB, FL. 33411
(561) 642-5333 FAX (561) 966-2293
EMAIL: CWEng@CWEng.US
LICENCE NO. CA0006245
CONSULTANT

----
MICHAEL A. GUIDA, P.E.
FL #60755


**VILLAGE OF PALM SPRINGS**

SCADA SYSTEM UPGRADE MAIN WATER TREATMENT PLANT (MAIN WTP)
2021B-003

ELECTRICAL SITE PLAN DETAILS

| | |
|---|---|
| DWG NO. | 38 |
| SHEET | E-03 |
| OF | 70 |
| PROJ. NO. | 400-077.01 |
| DATE | AUGUST 26, 2020 |


File name: C:\Civil 3D Projects\400-077.01 - Scada System Upgrades Main and R. L. Pratt WTP\01_Working (Main)\400-077.01_E-01-MULTI.dwg; Plotted @: 12/23/2020 1:29:36 PM; Scale multiplier: 0.5; Printed by: Matheus Siqueira; Milestone: BID DOCUMENTS


BID DOCUMENTS

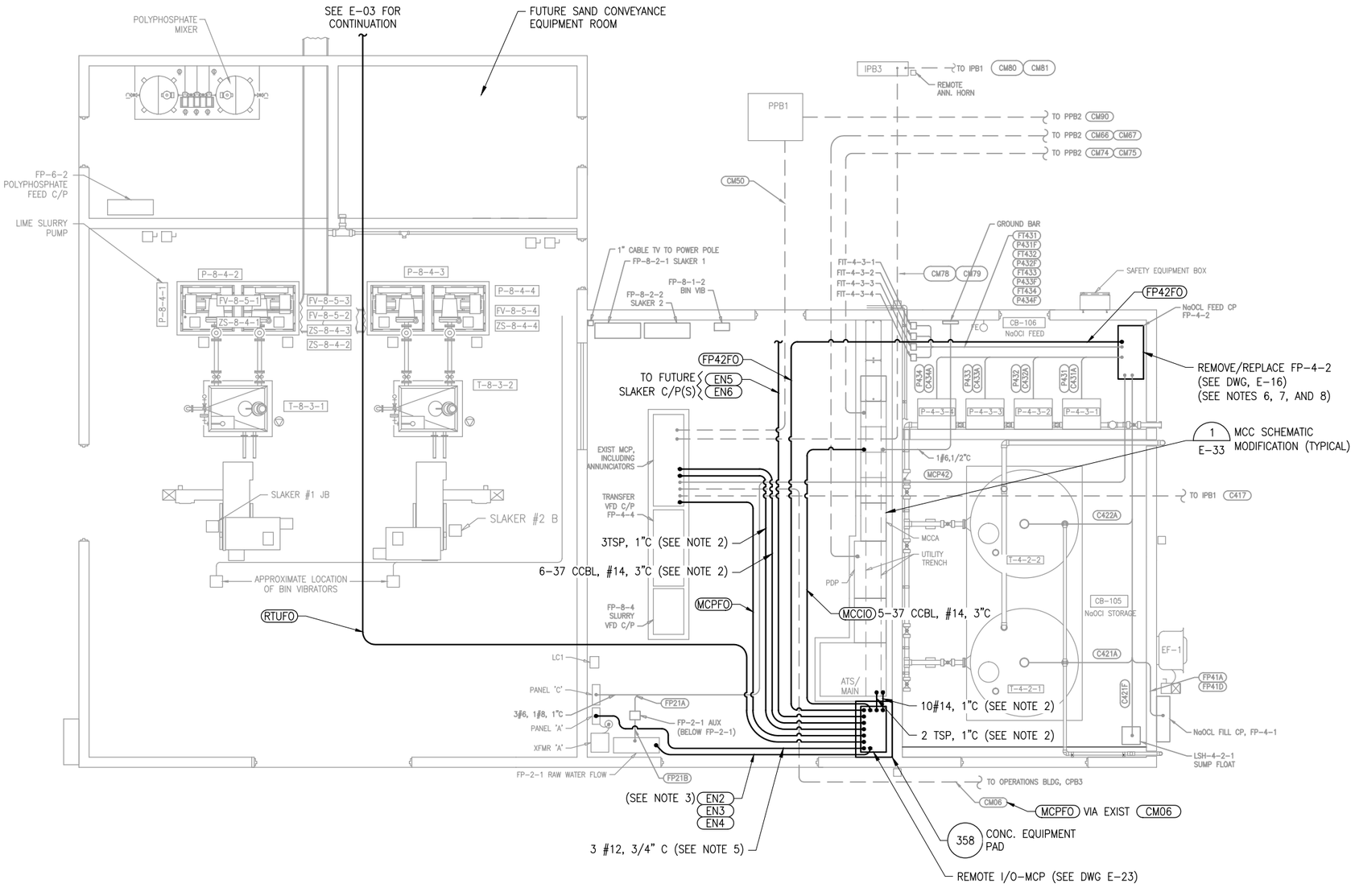


## NOTES

1) AFTER ALL NEW CONDUITS ARE INSTALLED PATCH, TOUCH UP, AND PAINT ANY IMPACTED WALLS, CEILINGS, ETC.
2) IDENTIFY EXISTING I/O REQUIRED, TAG AND EXTEND TO NEW IO-MCP. PROVIDE TERMINALS, RELAYS, ETC. AS REQUIRED.
3) TO FUTURE FCV-2-1-(3) VIA FP-2-1.
4) REFER TO NETWORK DIAGRAMS FOR F/O AND EN RACEWAYS.
5) ADD IP-20A BREAKER FOR REMOTE I/O-MCP PANEL POWER, UPDATE EXISTING PANEL A PANEL SCHEDULE.
6) IDENTIFY I/O REQUIRED, TAG AND EXTEND TO NEW FP-4-2.
7) REUSE EXISTING PANEL SERVICE POWER.
8) REUSE EXISTING PANEL HOUSEKEEPING PAD.

# CHEMICAL FEED BUILDING ELECTRICAL PLAN

SCALE: 1/4" = 1'-0"


**ECKLER ENGINEERING, INC.**
4700 RIVERSIDE DRIVE, SUITE 110 - CORAL SPRINGS, FL 33067
(954) 510-4700 - FAX (954) 755-2741
CA No. 7803


| | |
|---|---|
| DSGN: | D.K.HAMMANN |
| DR: | M.SIQUEIRA |
| CHK: | D. K. HAMMANN |
| APVD: | D. K. HAMMANN |

VERIFY SCALE — 1" — BAR IS ONE INCH ON ORIGINAL DRAWING. ADJUST SCALES AS NECESSARY.

| No. | DATE | REVISIONS | BY | APVD |
|---|---|---|---|---|


C & W engineering
ELECTRICAL CONSULTANTS
2775 VISTA PARKWAY, SUITE G-6, WPB, FL. 33411
(561) 642-5333 FAX (561) 966-2293
EMAIL: CWEng@CWEng.US
LICENCE NO. C40006245
CONSULTANT

----
MICHAEL A. GUIDA, P.E.
FL #60755


**VILLAGE OF PALM SPRINGS**

SCADA SYSTEM UPGRADE MAIN WATER TREATMENT PLANT (MAIN WTP)
2021B-003

CHEMICAL FEED BUILDING ELECTRICAL PLAN

| | |
|---|---|
| DWG NO. | 39 |
| OF | 70 |
| SHEET | E-04 |
| PROJ. NO. | 400-077.01 |
| DATE | AUGUST 26, 2020 |

BID DOCUMENTS


File name: C:\Civil 3D Projects\400-077.01 - Scada System Upgrades Main and R. L. Pratt WTP\01_Working (Main)\400-077.01_E-01-MULTI.dwg; Plotted @: 12/23/2020 1:29:38 PM; Scale multiplier: 0.5; Printed by: Matheus Siqueira; Milestone: BID DOCUMENTS

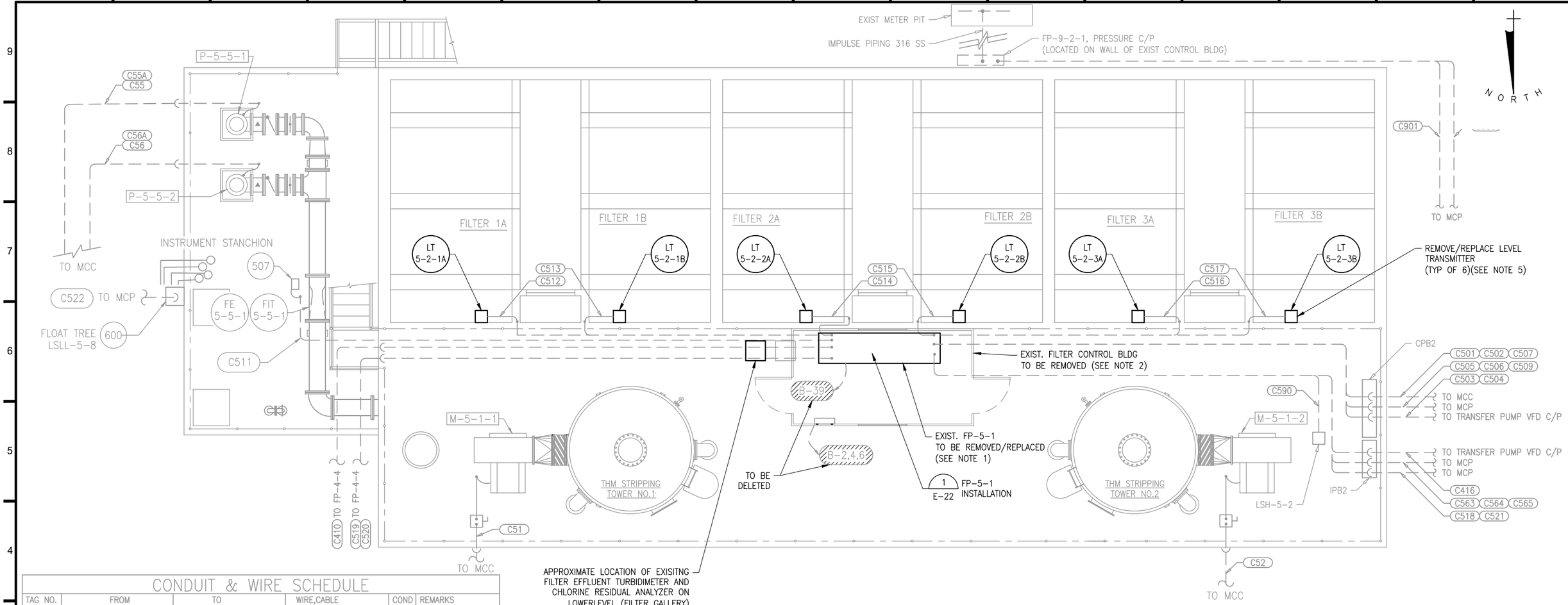


## CONDUIT & WIRE SCHEDULE

| TAG NO. | FROM | TO | WIRE,CABLE | COND | REMARKS |
|---|---|---|---|---|---|
| C501 | FP-5-1 FILTER C/P | MCC | 30C, CONT CBL, 1#14 | 2" | DISCRETE CONTROL |
| C502 | FP-5-1 FILTER C/P | MCC | 30C, CONT CBL, 1#14 | 2" | DISCRETE CONTROL |
| C503 | FP-5-1 FILTER C/P | TRANSFER VFD C/P | 30C, CONT CBL, 1#14 | 2" | DISCRETE CONTROL |
| C504 | FP-5-1 FILTER C/P | TRANSFER VFD C/P | | 2" | SPARE |
| C505 | FP-5-1 FILTER C/P | MCP | 10#14 | 3/4" | |
| C506 | FP-5-1 FILTER C/P | MCP | 10#14 | 3/4" | SPARE |
| C507 | FP-5-1 FILTER C/P | MCC | | 2" | SPARE |
| C508 | FP-5-1 FILTER C/P | | | | OMITTED |
| C509 | FP-5-1 FILTER C/P | MCP | | 1" | SPARE |
| C510 | | | | | OMITTED |
| C511 | FP-5-1 FILTER C/P | FIT-5-5-1, BWASH FLOW | 2 SH.PR.,1#14 | 3/4" | 4-20MA |
| C512 | FP-5-1 FILTER C/P | LT-5-2-1A | VENDOR CABLE | 1" | |
| C513 | FP-5-1 FILTER C/P | LT-5-2-1B | VENDOR CABLE | 1" | |
| C514 | FP-5-1 FILTER C/P | LT-5-2-2A | VENDOR CABLE | 1" | |
| C515 | FP-5-1 FILTER C/P | LT-5-2-2B | VENDOR CABLE | 1" | |
| C516 | FP-5-1 FILTER C/P | LT-5-2-3A | VENDOR CABLE | 1" | |
| C517 | FP-5-1 FILTER C/P | LT-5-2-3B | VENDOR CABLE | 1" | |
| C518 | FP-5-1 FILTER C/P | MCP | 2 SH.PR.,1#14 | 3/4" | GST LEVEL |
| C519 | FP-5-1 FILTER C/P | FP-4-4, TRANSFER C/P | 2 SH.PR.,1#14 | 3/4" | CL2 BASIN LEVEL |
| C520 | FP-5-1 FILTER C/P | FP-4-4, TRANSFER C/P | | 3/4" | SPARE |
| C521 | FP-5-1 FILTER C/P | MCP | | 1" | SPARE |
| C522 | FLOAT TREE | MCP | 12#14 | 3/4" | |

## TOP PLAN

SCALE: 1/4" = 1'-0"

## NOTES

1) IDENTIFY ALL EXISTING I/O REQUIRED, TAG AND EXTEND TO NEW FILTER C/P LOCATION.
2) ELIMINATE ALL POWER TO EXISTING BUILDING. REMOVE WIRE AND SEAL CONDUITS AT FLOOR.
3) ONLY ONE FILTER, ONE BACKWASH PUMP, ONE BACKWASH BLOWER AND ONE TRANSFER PUMP CAN BE OUT OF SERVICE AT A TIME.
4) INDENTITFY ALL PANEL POWER SUPPLY REQUIREMENTS, TAG AND EXTEND TO NEW FP-5-1.
5) REMOVE/REPLACE EXISTING CAPACITANCE PROBE STYLE LEVEL TRANSMITTER. MATCH EXISTING. REUSE EXISTING CONDUIT/WIRE TO RECONNECT NEW FIELD INSTRUMENT.

**ECKLER ENGINEERING, INC.**
4700 RIVERSIDE DRIVE, SUITE 110 - CORAL SPRINGS, FL 33067
(954) 510-4700 - FAX (954) 755-2741
CA No. 7803

DSGN: D.K.HAMMANN
DR: M.SIQUEIRA
CHK: D. K. HAMMANN
APVD: D. K. HAMMANN

VERIFY SCALE
1"
BAR IS ONE INCH ON ORIGINAL DRAWING. ADJUST SCALES AS NECESSARY.

| No. | DATE | REVISIONS | BY | APVD |
|---|---|---|---|---|

C & W engineering
ELECTRICAL CONSULTANTS
2775 VISTA PARKWAY, SUITE G-6, WPB, FL. 33411
(561) 642-5333 FAX (561) 966-2293
EMAIL: CWEng@CWEng.US
LICENCE NO. CA0006245
CONSULTANT
SUB PROJ. NO.

----
MICHAEL A. GUIDA, P.E.
FL #60755

**VILLAGE OF PALM SPRINGS**
SCADA SYSTEM UPGRADE MAIN WATER TREATMENT PLANT (MAIN WTP)
2021B-003

FILTER BUILDING (TOP)
ELECTRICAL PLAN

DWG NO. 40 OF 70 | SHEET E-05 | PROJ. NO. 400-077.01 | DATE AUGUST 26, 2020

File name: C:\Civil 3D Projects\400-077.01 - Scada System Upgrades Main and R. L. Pratt WTP\01_Working (Main)\400-077.01_E-05-MULTI.dwg; Plotted @: 12/23/2020 1:29:47 PM; Scale multiplier: 0.5; Printed by: Matheus Siqueira; Milestone: BID DOCUMENTS

BID DOCUMENTS

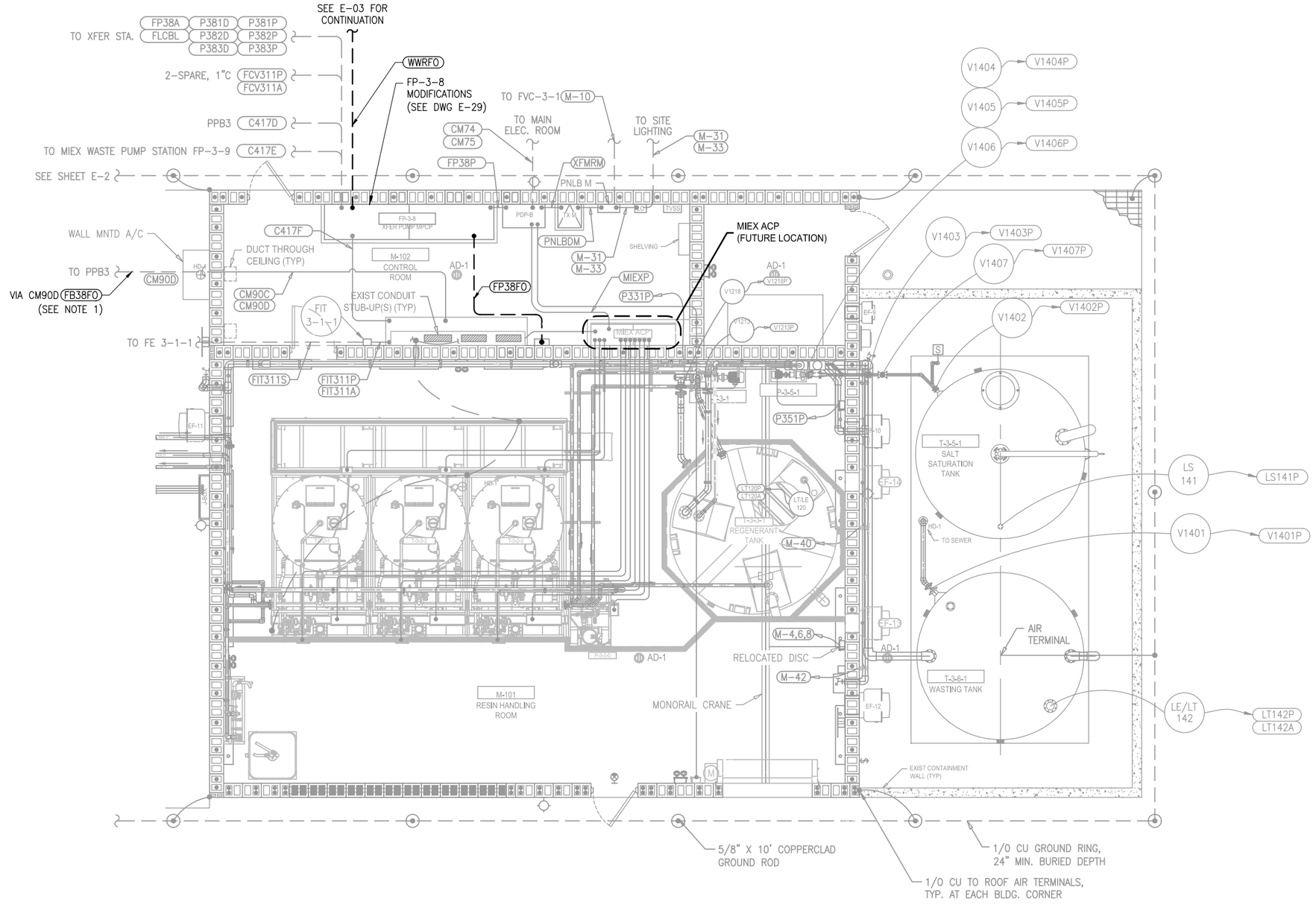


# MIEX REGENERATION BUILDING ELECTRICAL PLAN

SCALE: 1/4" = 1'-0"

## NOTES

1) EXISTING FIBER FROM MIEX CONTROL ROOM TO SCADA OPERATIONS ROOM SHALL REMAIN AND BE REUSED.


**ECKLER ENGINEERING, INC.**
4700 RIVERSIDE DRIVE, SUITE 110 - CORAL SPRINGS, FL 33067
(954) 510-4700 - FAX (954) 755-2741
CA No. 7803

C & W engineering
ELECTRICAL CONSULTANTS
2775 VISTA PARKWAY, SUITE G-6, WPB, FL. 33411
(561) 642-5333 FAX (561) 966-2293
EMAIL: CWEng@CWEng.US
LICENCE NO. CA0006245
CONSULTANT

MICHAEL A. GUIDA, P.E.
FL #60755


| | |
|---|---|
| DSGN: | D.K.HAMMANN |
| DR: | M.SIQUEIRA |
| CHK: | D. K. HAMMANN |
| APVD: | D. K. HAMMANN |

VERIFY SCALE
1"
BAR IS ONE INCH ON ORIGINAL DRAWING. ADJUST SCALES AS NECESSARY.

| No. | DATE | REVISIONS | BY | APVD |
|---|---|---|---|---|

**VILLAGE OF PALM SPRINGS**
SCADA SYSTEM UPGRADE MAIN WATER TREATMENT PLANT (MAIN WTP)
2021B-003

MIEX REGENERATION BUILDING ELECTRICAL PLAN

| | |
|---|---|
| DWG NO. | 41 |
| OF | 70 |
| SHEET | E-06 |
| PROJ. NO. | 400-077.01 |
| DATE | AUGUST 26, 2020 |


File name: C:\Civil 3D Projects\400-077.01 - Scada System Upgrades Main and R. L. Pratt WTP\01_Working (Main)\400-077.01_E-05-MULTI.dwg; Plotted @: 12/23/2020 1:29:52 PM; Scale multiplier: 0.5; Printed by: Matheus Siqueira; Milestone: BID DOCUMENTS


BID DOCUMENTS

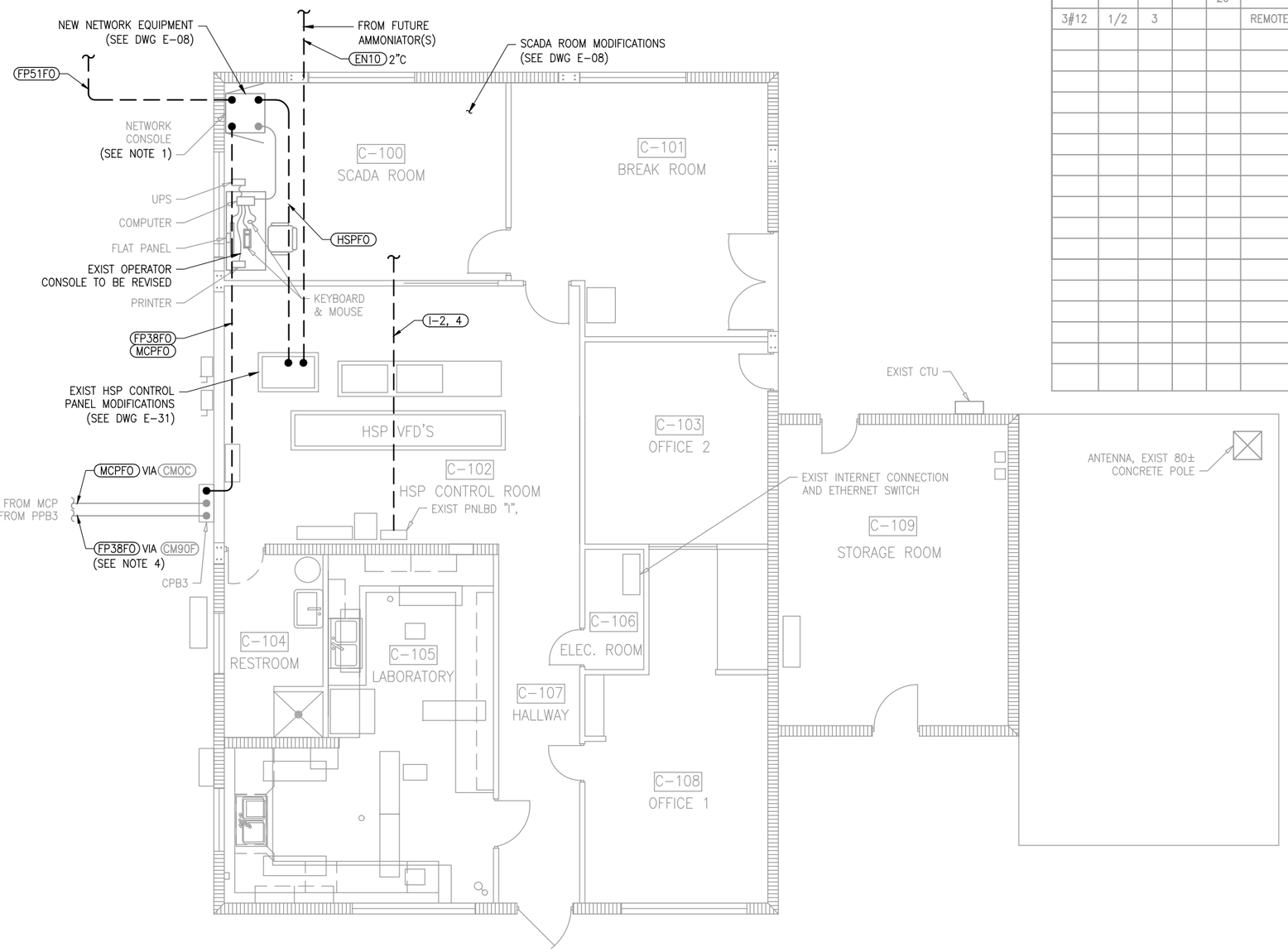


PANEL BOARD I

| WIRE SIZE | COND SIZE | BUS AMPS A | B | C | LOAD | POLES | AMPS | BUS A B C | AMPS | POLES | LOAD | BUS AMPS A | B | C | WIRE SIZE | COND SIZE |
|---|---|---|---|---|---|---|---|---|---|---|---|---|---|---|---|---|
| 4#3 | 1" | 20 | | | SUBFEED TO PANEL 'D' | 3 | 60 | 1 2 | 30 | 2 | NETWORK CONSOLE | 12 | | | 3#10 | 3/4" |
| 1#6 | | | 20 | | | | | 3 4 | | | | | 12 | | | |
| | | | | 20 | | | | 5 6 | 20 | 1 | NETWORK CONSOLE RECEPTACLES | | | 6 | 3#12 | 3/4" |
| 3#12 | 1/2 | 3 | | | REMOTE ANNUNCIATOR | 1 | 20 | 7 8 | | | | | | | | |
| | | | | | | | | 9 10 | | | | | | | | |
| | | | | | | | | 11 12 | | | | | | | | |
| | | | | | | | | 13 14 | | | | | | | | |
| | | | | | | | | 15 16 | | | | | | | | |
| | | | | | | | | 17 18 | | | | | | | | |
| | | | | | | | | 19 20 | | | | | | | | |
| | | | | | | | | 21 22 | | | | | | | | |
| | | | | | | | | 23 24 | | | | | | | | |
| | | | | | | | | 25 26 | | | | | | | | |
| | | | | | | | | 27 28 | | | | | | | | |
| | | | | | | | | 29 30 | | | | | | | | |
| | | | | | | | | 31 32 | | | | | | | | |
| | | | | | | | | 33 34 | | | | | | | | |
| | | | | | | | | 55 36 | | | | | | | | |
| | | | | | | | | 37 38 | 20 | 1 | SPARE | | | | | |
| | | | | | | | | 39 40 | 20 | 1 | SPARE | | | | | |
| | | | | | | | | 41 42 | 20 | 1 | SPARE | | | | | |

TOTAL AMPS: BUS A___ BUS B___ BUS C___ CONNECTED Kva____

RATED VOLTAGE: ■ 120/208 ☐ 277/480 3 PHASE, 4 WIRE | BRANCH POLES ☐ 12 ☐ 20 ☐ 30 ■ 42

RATED AMPS: ■ 100 ☐ 225 ☐ 400 ☐ 150 | CABINET: ■ SURFACE ☐ FLUSH

FULL NEUTRAL BUS | ■ GROUND BUS | ■ HINGED DOOR | ■ KEYED DOOR LATCH | NEMA 1 ENCLOSURE

☐ FUSED ■ CIRCUIT BREAKER (BOLT-IN) BRANCH DEVICES

☐ MAIN LUGS ONLY | MAIN 100 AMPS ■ BREAKER ☐ FUSED SWITCH | ☐ _____ TO BE GFI BREAKERS

ALL BREAKERS MUST BE RATED TO INTERRUPT A SHORT CIRCUIT ISC OF 10,000 AMPS SYMMETRICAL.

APPROVED MF'RS. WESTINGHOUSE, ITE, SQUARE D GE ONLY | MAIN LUGS _____ SETS SIZE: _____

## N O T E S

1) TO BE REUSED.
2) ADD 2P-20A BREAKER FOR NETWORK CONSOLE POWER, UPDATE EXISTING LP-1 PANEL SCHEDULE.
3) REFER TO NETWORK DIAGRAMS FOR F/O AND EN RACEWAYS.
4) EXISTING FIBER FROM MIEX CONTROL ROOM TO SCADA OPERATIONS ROOM SHALL REMAIN AND BE REUSED.

# EXISTING ADMINISTRATION BUILDING ELECTRICAL PLAN

SCALE: 1/4" = 1'-0"


**ECKLER ENGINEERING, INC.**
4700 RIVERSIDE DRIVE, SUITE 110 - CORAL SPRINGS, FL 33067
(954) 510-4700 - FAX (954) 755-2741
CA No. 7803


DSGN: D.K.HAMMANN
DR: M.SIQUEIRA
CHK: D. K. HAMMANN
APVD: D. K. HAMMANN

VERIFY SCALE
1"
BAR IS ONE INCH ON ORIGINAL DRAWING. ADJUST SCALES AS NECESSARY.

| No. | DATE | REVISIONS | BY | APVD |
|---|---|---|---|---|


C & W engineering
ELECTRICAL CONSULTANTS
2775 VISTA PARKWAY, SUITE G-6, WPB, FL. 33411
(561) 642-5333 FAX (561) 966-2293
EMAIL: CWEng@CWEng.US
LICENCE NO. CA0006245
CONSULTANT

---
MICHAEL A. GUIDA, P.E.
FL #60755


**VILLAGE OF PALM SPRINGS**

SCADA SYSTEM UPGRADE MAIN WATER TREATMENT PLANT (MAIN WTP)
2021B-003

EXISTING ADMINISTRATION - LABORATORY BUILDING ELECTRICAL PLAN

DWG NO. 42 | SHEET E-07
OF 70 | PROJ. NO. 400-077.01
DATE AUGUST 26, 2020


File name: C:\Civil 3D Projects\400-077.01 - Scada System Upgrades Main and R. L. Pratt WTP\01_Working (Main)\400-077.01_E-05-MULTI.dwg; Plotted @: 12/23/2020 1:29:54 PM; Scale multiplier: 0.5; Printed by: Matheus Siqueira; Milestone: BID DOCUMENTS


BID DOCUMENTS

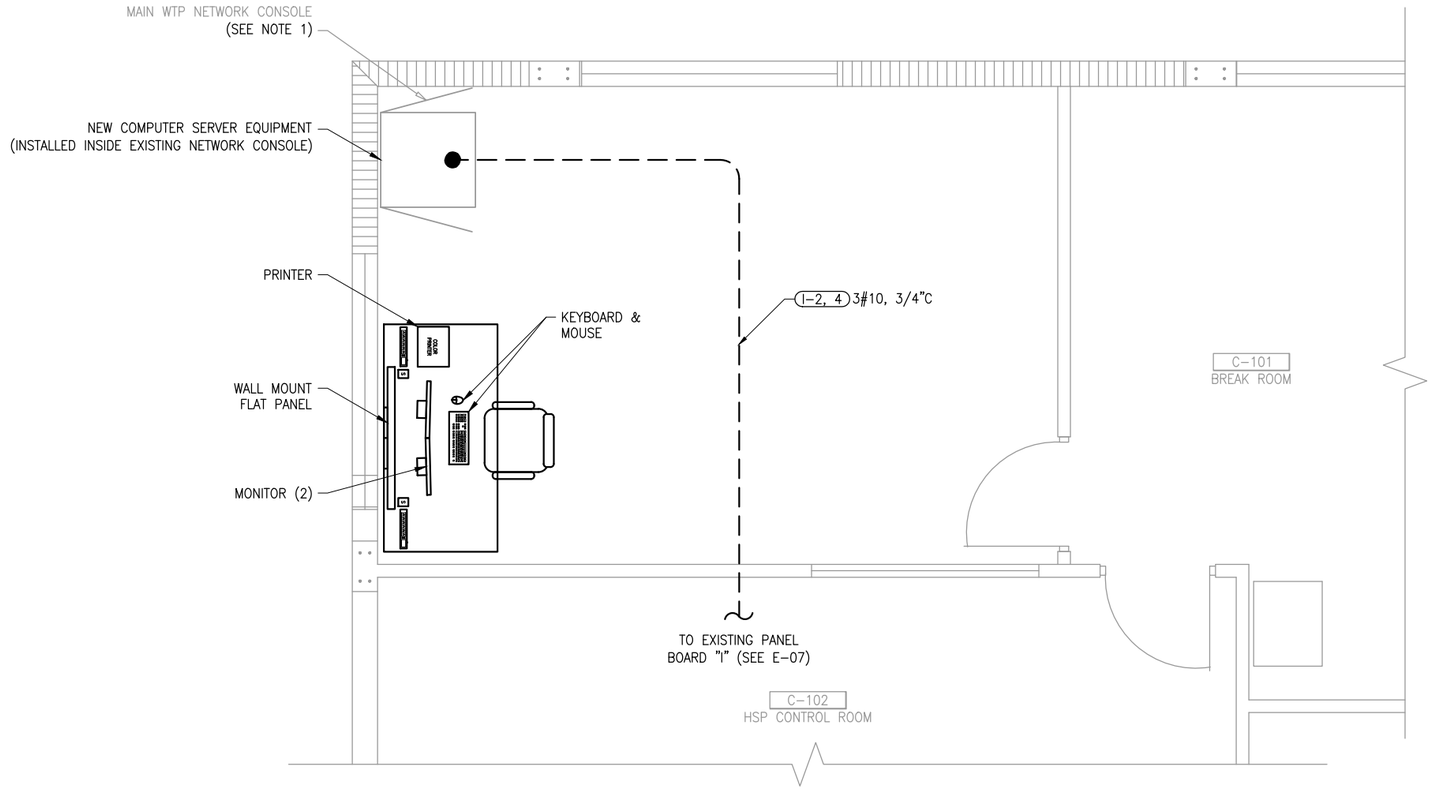


NORTH

## EXISITNG SCADA CONTROL ROOM ELECTRICAL PLAN

SCALE: 1/2" = 1'-0"

### NOTES

1) TO BE REUSED.
2) REFER TO NETWORK DIAGRAMS FOR F/O AND EN RACEWAYS.


**ECKLER ENGINEERING, INC.**
4700 RIVERSIDE DRIVE, SUITE 110 - CORAL SPRINGS, FL 33067
(954) 510-4700 - FAX (954) 755-2741
CA No. 7803

DSGN: D.K.HAMMANN
DR: M.SIQUEIRA
CHK: D. K. HAMMANN
APVD: D. K. HAMMANN

VERIFY SCALE
1"
BAR IS ONE INCH ON ORIGINAL DRAWING. ADJUST SCALES AS NECESSARY.


| No. | DATE | REVISIONS | BY | APVD |
|---|---|---|---|---|


C & W engineering
ELECTRICAL CONSULTANTS
2775 VISTA PARKWAY, SUITE G-6, WPB, FL. 33411
(561) 642-5333 FAX (561) 966-2293
EMAIL: CWEng@CWEng.US
LICENCE NO. CA0006245
CONSULTANT

----
MICHAEL A. GUIDA, P.E.
FL #60755


**VILLAGE OF PALM SPRINGS**

SCADA SYSTEM UPGRADE MAIN WATER TREATMENT PLANT (MAIN WTP)
2021B-003

EXISITNG SCADA CONTROL ROOM ELECTRICAL PLAN

| DWG NO. | SHEET |
|---|---|
| 43 | E-08 |
| OF | PROJ. NO. |
| 70 | 400-077.01 |
| DATE | |
| AUGUST 26, 2020 | |


File name: C:\Civil 3D Projects\400-077.01 - Scada System Upgrades Main and R. L. Pratt WTP\01_Working (Main)\400-077.01_E-05-MULTI.dwg; Plotted @: 12/23/2020 1:29:56 PM; Scale multiplier: 0.5; Printed by: Matheus Siqueira; Milestone: BID DOCUMENTS


BID DOCUMENTS

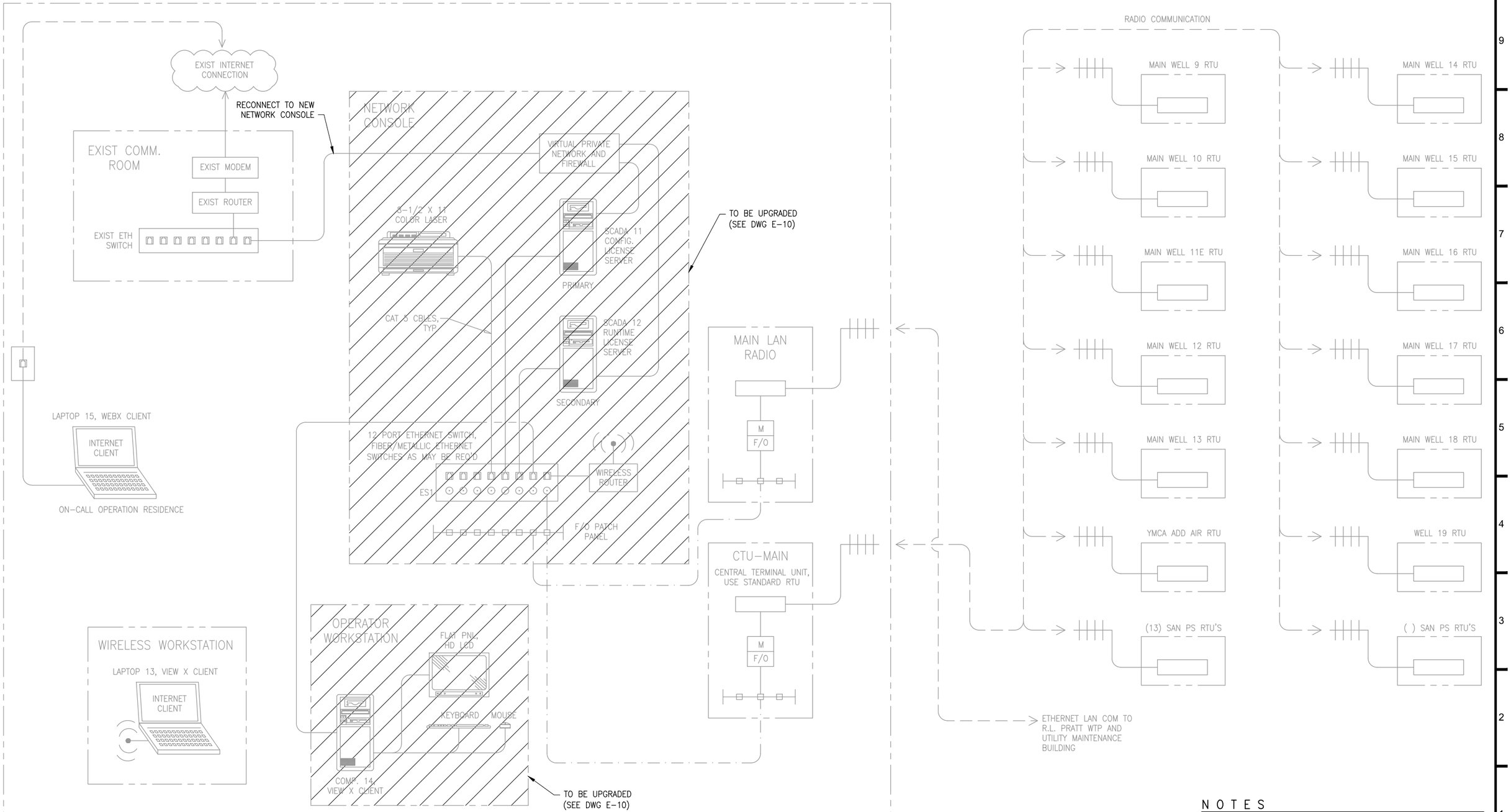


N O T E S

1)

**ECKLER ENGINEERING, INC.**
4700 RIVERSIDE DRIVE, SUITE 110 - CORAL SPRINGS, FL 33067
(954) 510-4700 - FAX (954) 755-2741
CA No. 7803

DSGN: D.K.HAMMANN
DR: M.SIQUEIRA
CHK: D. K. HAMMANN
APVD: D. K. HAMMANN

VERIFY SCALE
1"
BAR IS ONE INCH ON ORIGINAL DRAWING. ADJUST SCALES AS NECESSARY.

| No. | DATE | REVISIONS | BY | APVD |
|---|---|---|---|---|

C & W engineering
ELECTRICAL CONSULTANTS
2775 VISTA PARKWAY, SUITE G-6, WPB, FL. 33411
(561) 642-5333 FAX (561) 966-2293
EMAIL: CWEng@CWEng.US
LICENCE NO. C40006245
CONSULTANT

SIB PROJ. NO. 99 - 1

---
MICHAEL A. GUIDA, P.E.
FL #60755

**VILLAGE OF PALM SPRINGS**
SCADA SYSTEM UPGRADE MAIN WATER TREATMENT PLANT (MAIN WTP)
2021B-003

NETWORK DIAGRAMS (SHEET 1)

DWG NO. 44 OF 70
SHEET E-09
PROJ. NO. 400-077.01
DATE AUGUST 26, 2020

File name: C:\Civil 3D Projects\400-077.01 - Scada System Upgrades Main and R. L. Pratt WTP\01_Working (Main)\400-077.01_E-09-MULTI.dwg; Plotted @: 12/23/2020 1:30:03 PM; Scale multiplier: 0.5; Printed by: Matheus Siqueira; Milestone: BID DOCUMENTS

BID DOCUMENTS

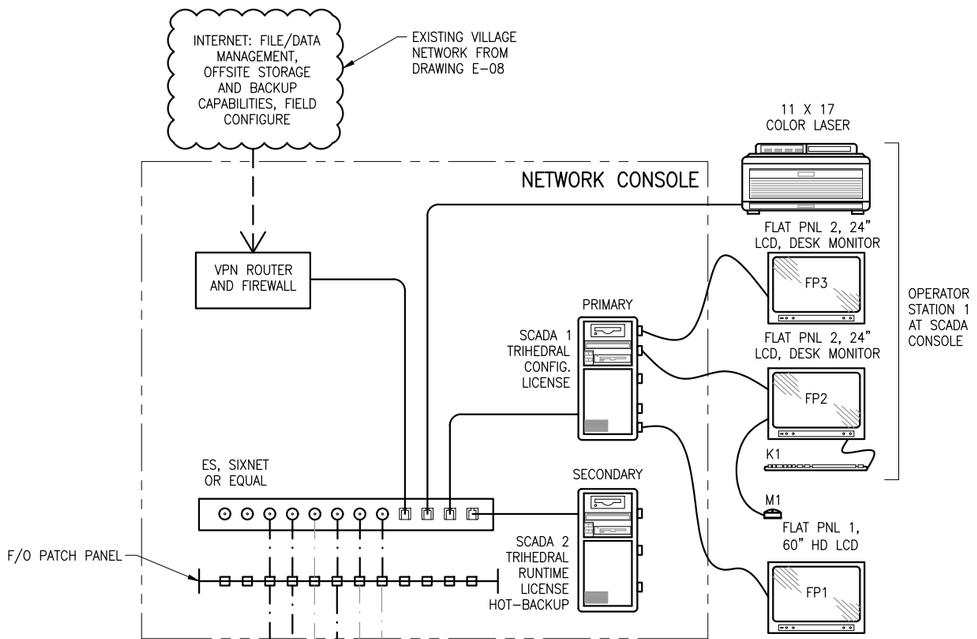


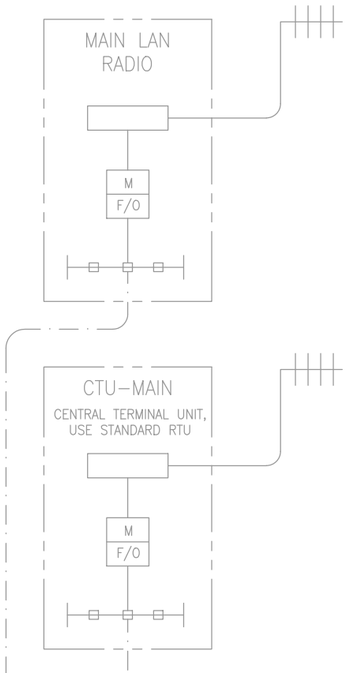


MCPFO F/O CBL, 1#14, 2"C → REMOTE I/O MCP

FP38FO F/O CBL, 1#14, 2"C → EXIST MIEX TRANSFER PUMP CONTROL PANEL FP-3-8

FP51FO F/O CBL, 1#14, 2"C → FILTER CONTROL PANEL FP-5-1

HSPFO F/O CBL, 1#14, 2"C → EXISTING HSP CONTROL PANEL FP-9-2

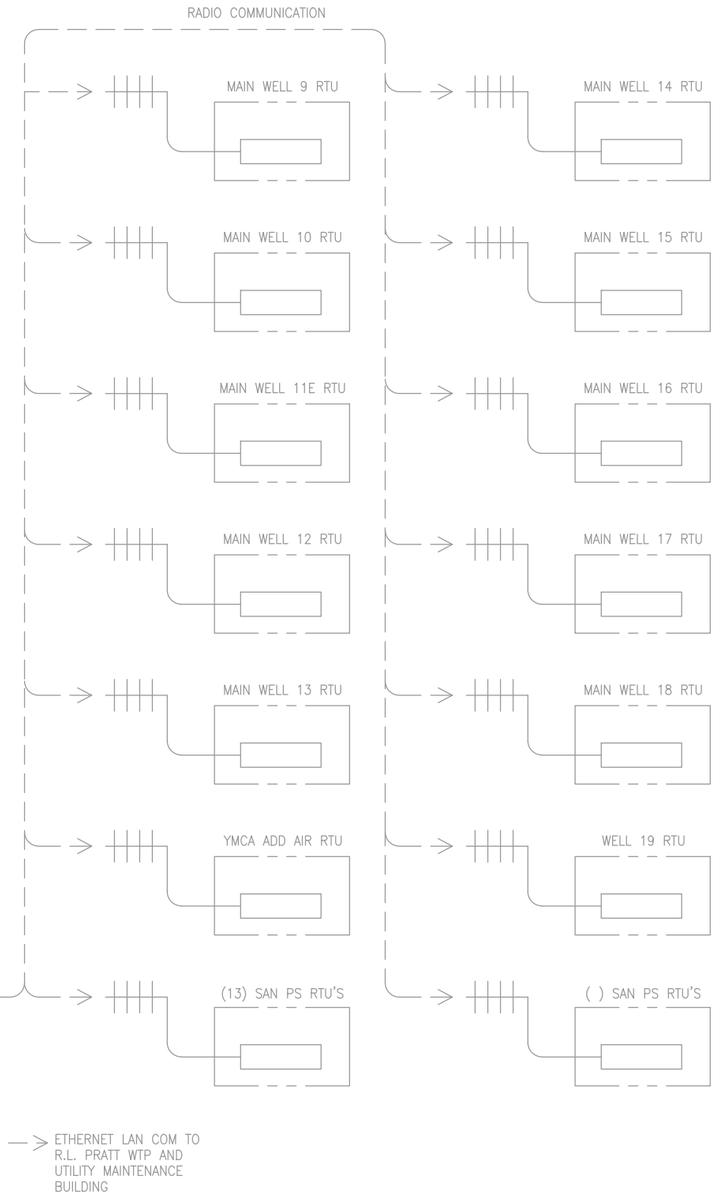


MAIN WTP

N O T E S

1)


**ECKLER ENGINEERING, INC.**
4700 RIVERSIDE DRIVE, SUITE 110 - CORAL SPRINGS, FL 33067
(954) 510-4700 - FAX (954) 755-2741
CA No. 7803


| | |
|---|---|
| DSGN: | D.K.HAMMANN |
| DR: | M.SIQUEIRA |
| CHK: | D. K. HAMMANN |
| APVD: | D. K. HAMMANN |

VERIFY SCALE
1"
BAR IS ONE INCH ON ORIGINAL DRAWING. ADJUST SCALES AS NECESSARY.

| No. | DATE | REVISIONS | BY | APVD |
|---|---|---|---|---|


C & W engineering
ELECTRICAL CONSULTANTS
2775 VISTA PARKWAY, SUITE G-6, WPB, FL. 33411
(561) 642-5333 FAX (561) 966-2293
EMAIL: CWEng@CWEng.US
LICENCE NO. CA0006245
CONSULTANT

----
MICHAEL A. GUIDA, P.E.
FL #60755


**VILLAGE OF PALM SPRINGS**

SCADA SYSTEM UPGRADE MAIN WATER TREATMENT PLANT (MAIN WTP)
2021B-003

NETWORK DIAGRAMS (SHEET 2)

| | |
|---|---|
| DWG NO. | 45 |
| OF | 70 |
| SHEET | E-10 |
| PROJ. NO. | 400-077.01 |
| DATE | AUGUST 26, 2020 |


File name: C:\Civil 3D Projects\400-077.01 - Scada System Upgrades Main and R. L. Pratt WTP\01_Working (Main)\400-077.01_E-09-MULTI.dwg; Plotted @: 12/23/2020 1:30:05 PM; Scale multiplier: 0.5; Printed by: Matheus Siqueira; Milestone: BID DOCUMENTS


BID DOCUMENTS

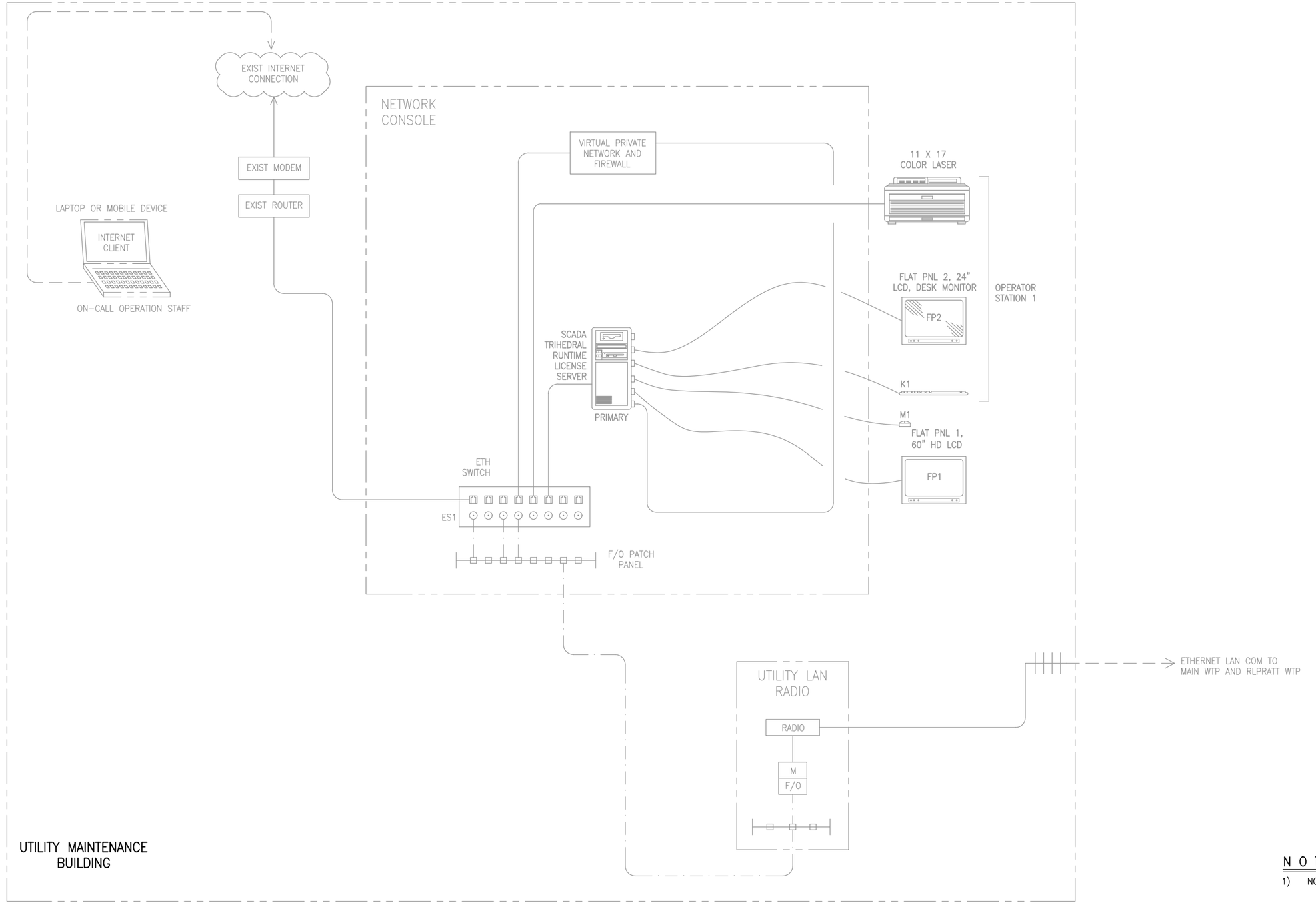


## NOTES

1) NO REVISIONS AT THIS SITE.


**ECKLER ENGINEERING, INC.**
4700 RIVERSIDE DRIVE, SUITE 110 - CORAL SPRINGS, FL 33067
(954) 510-4700 - FAX (954) 755-2741
CA No. 7803


| | |
|---|---|
| DSGN: | D.K.HAMMANN |
| DR: | M.SIQUEIRA |
| CHK: | D. K. HAMMANN |
| APVD: | D. K. HAMMANN |

VERIFY SCALE
1"
BAR IS ONE INCH ON ORIGINAL DRAWING. ADJUST SCALES AS NECESSARY.

| No. | DATE | REVISIONS | BY | APVD |
|---|---|---|---|---|


C & W engineering
ELECTRICAL CONSULTANTS
2775 VISTA PARKWAY, SUITE G-6, WPB, FL. 33411
(561) 642-5333 FAX (561) 966-2293
EMAIL: CWEng@CWEng.US
LICENCE NO. CA0006245
CONSULTANT

----
MICHAEL A. GUIDA, P.E.
FL #60755


**VILLAGE OF PALM SPRINGS**

SCADA SYSTEM UPGRADE MAIN WATER TREATMENT PLANT (MAIN WTP)
2021B-003

NETWORK DIAGRAMS (SHEET 3)

| | |
|---|---|
| DWG NO. | 46 |
| OF | 70 |
| DATE | AUGUST 26, 2020 |
| SHEET | E-11 |
| PROJ. NO. | 400-077.01 |


File name: C:\Civil 3D Projects\400-077.01 - Scada System Upgrades Main and R. L. Pratt WTP\01_Working (Main)\400-077.01_E-09-MULTI.dwg; Plotted @: 12/23/2020 1:30:07 PM; Scale multiplier: 0.5; Printed by: Matheus Siqueira; Milestone: BID DOCUMENTS


BID DOCUMENTS

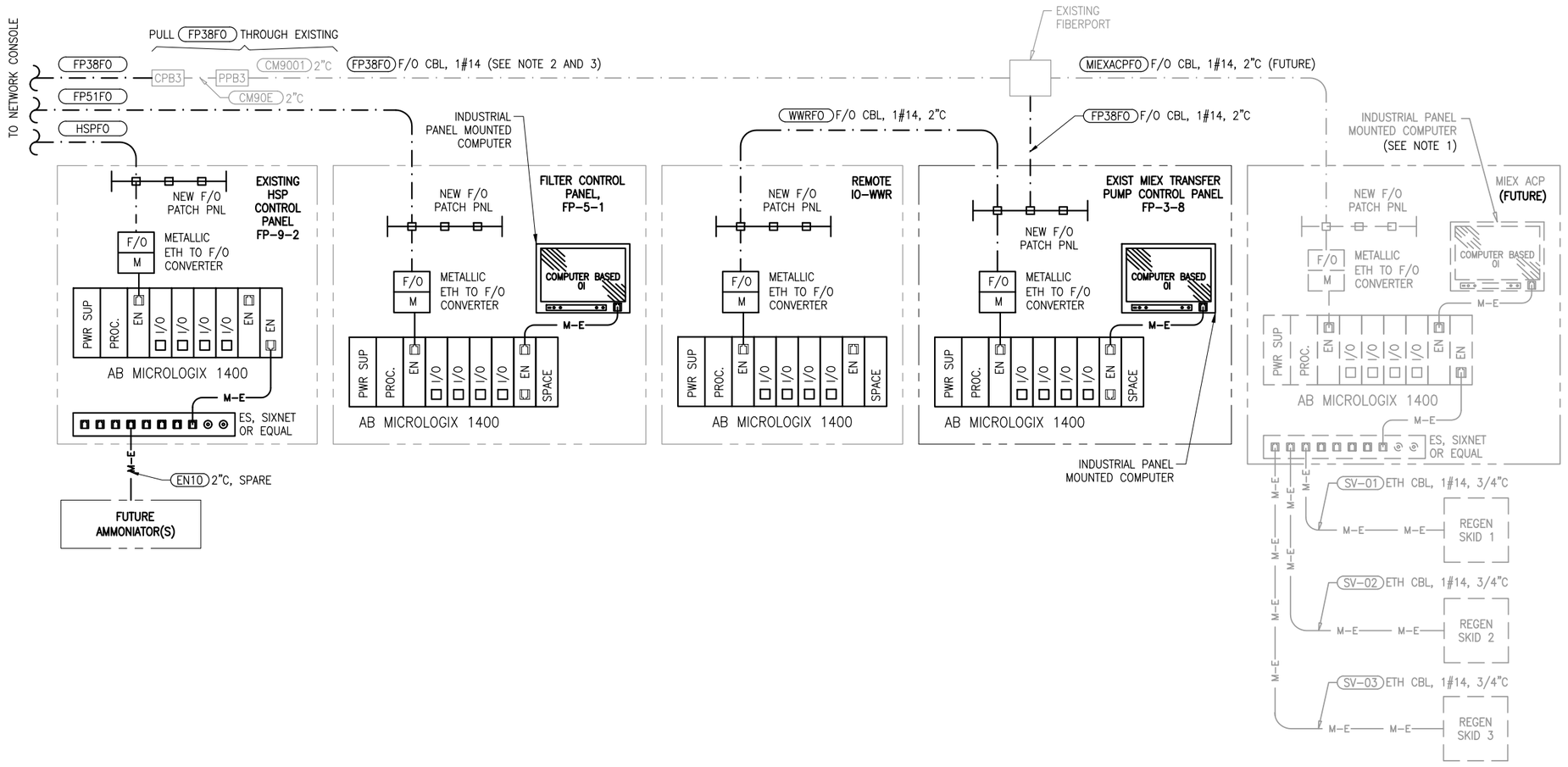


## NOTES

1) FUTURE NETWORK CONNECTION.
2) EXISITING FIBER FROM MIEX CONTROL ROOM TO SCADA OPERATIONS ROOM SHALL REMAIN AND BE REUSED.
3) EXISTING FIBER PORT LOCATED IN MIEX CONTROL ROOM WITH TWO (2) SPARE SPACES.


**ECKLER ENGINEERING, INC.**
4700 RIVERSIDE DRIVE, SUITE 110 - CORAL SPRINGS, FL 33067
(954) 510-4700 - FAX (954) 755-2741
CA No. 7803


DSGN: D.K.HAMMANN
DR: M.SIQUEIRA
CHK: D. K. HAMMANN
APVD: D. K. HAMMANN

VERIFY SCALE
1"
BAR IS ONE INCH ON ORIGINAL DRAWING. ADJUST SCALES AS NECESSARY.

| No. | DATE | REVISIONS | BY | APVD |
|---|---|---|---|---|


C & W engineering
ELECTRICAL CONSULTANTS
2775 VISTA PARKWAY, SUITE G-6, WPB, FL. 33411
(561) 642-5333 FAX (561) 966-2293
EMAIL: CWEng@CWEng.US
LICENCE NO. CA0006245
CONSULTANT

----
MICHAEL A. GUIDA, P.E.
FL #60755


**VILLAGE OF PALM SPRINGS**

SCADA SYSTEM UPGRADE MAIN WATER TREATMENT PLANT (MAIN WTP)
2021B-003

NETWORK DIAGRAMS (SHEET 4)

DWG NO. 47 | SHEET E-12
OF 70 | PROJ. NO. 400-077.01
DATE AUGUST 26, 2020


File name: C:\Civil 3D Projects\400-077.01 - Scada System Upgrades Main and R. L. Pratt WTP\01_Working (Main)\400-077.01_E-09-MULTI.dwg; Plotted @: 12/23/2020 1:30:08 PM; Scale multiplier: 0.5; Printed by: Matheus Siqueira; Milestone: BID DOCUMENTS


BID DOCUMENTS

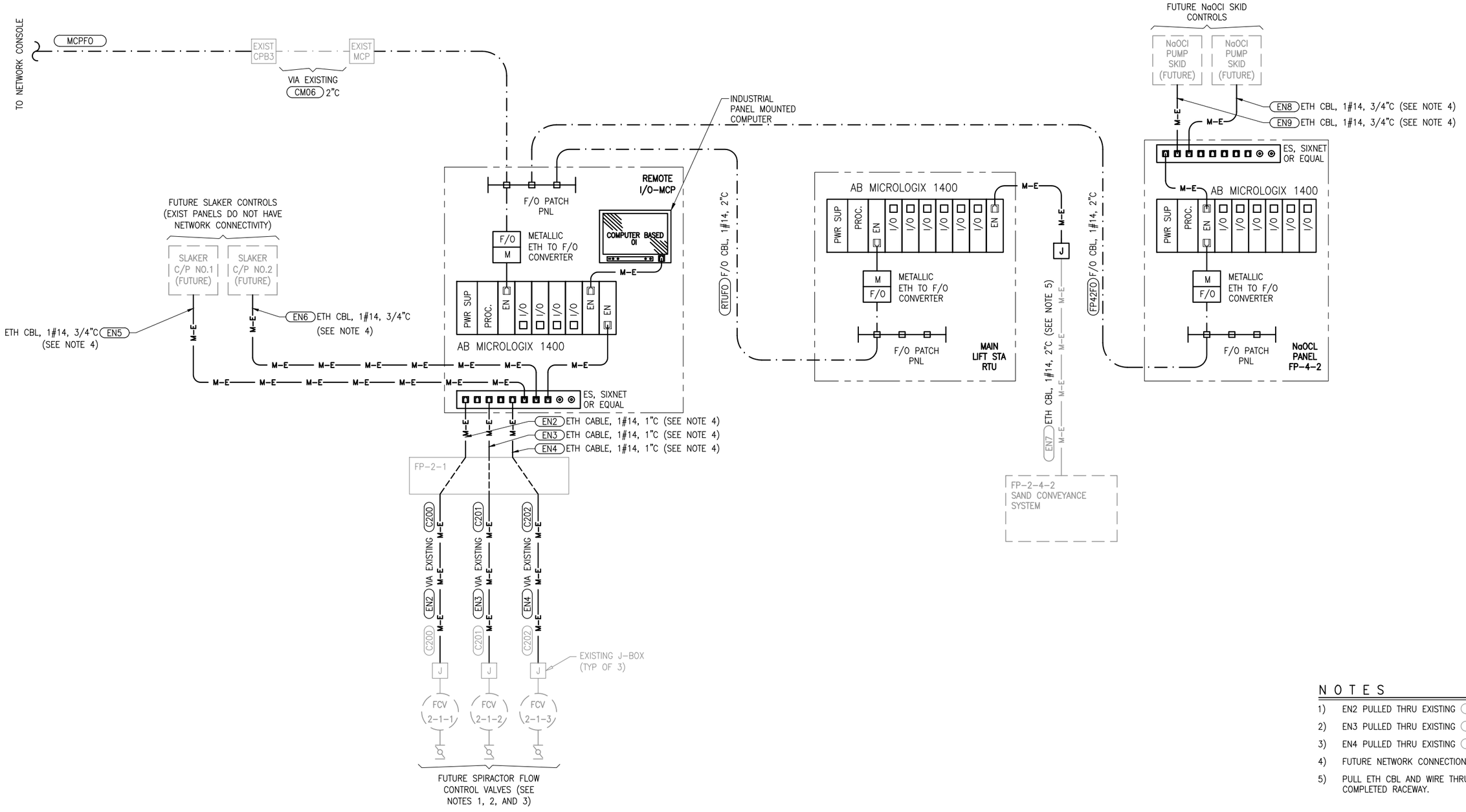


## NOTES

1) EN2 PULLED THRU EXISTING C200
2) EN3 PULLED THRU EXISTING C201
3) EN4 PULLED THRU EXISTING C202
4) FUTURE NETWORK CONNECTION.
5) PULL ETH CBL AND WIRE THRU COMPLETED RACEWAY.


**ECKLER ENGINEERING, INC.**
4700 RIVERSIDE DRIVE, SUITE 110 - CORAL SPRINGS, FL 33067
(954) 510-4700 - FAX (954) 755-2741
CA No. 7803


| | |
|---|---|
| DSGN: | D.K.HAMMANN |
| DR: | M.SIQUEIRA |
| CHK: | D. K. HAMMANN |
| APVD: | D. K. HAMMANN |

VERIFY SCALE
1"
BAR IS ONE INCH ON ORIGINAL DRAWING. ADJUST SCALES AS NECESSARY.

| No. | DATE | REVISIONS | BY | APVD |
|---|---|---|---|---|


C & W engineering
ELECTRICAL CONSULTANTS
2775 VISTA PARKWAY, SUITE G-6, WPB, FL. 33411
(561) 642-5333 FAX (561) 966-2293
EMAIL: CWEng@CWEng.US
LICENCE NO. CA0006245
CONSULTANT

----
MICHAEL A. GUIDA, P.E.
FL #60755


**VILLAGE OF PALM SPRINGS**

SCADA SYSTEM UPGRADE MAIN WATER TREATMENT PLANT (MAIN WTP)
2021B-003

NETWORK DIAGRAM (SHEET 5)

| | |
|---|---|
| DWG NO. | 48 |
| SHEET | E-13 |
| OF | 70 |
| PROJ. NO. | 400-077.01 |
| DATE | AUGUST 26, 2020 |

BID DOCUMENTS


File name: C:\Civil 3D Projects\400-077.01 - Scada System Upgrades Main and R. L. Pratt WTP\01_Working (Main)\400-077.01_E-09-MULTI.dwg; Plotted @: 12/23/2020 1:30:10 PM; Scale multiplier: 0.5; Printed by: Matheus Siqueira; Milestone: BID DOCUMENTS

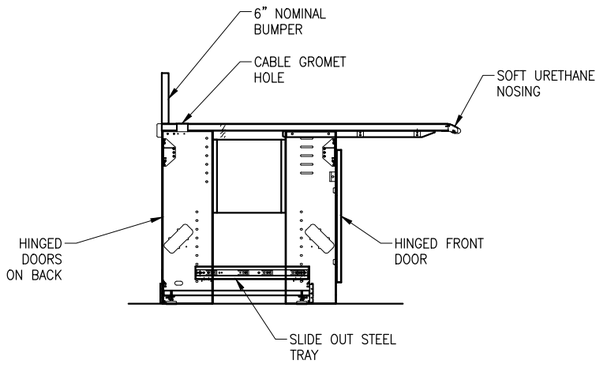


## SIDE VIEW

N.T.S.

## N O T E S:

1) REUSE EXISTING NETWORK/SERVER ENCLOSURE, FURNISH/INSTALL NEW SERVERS, SWITCHES PER DRAWINGS.
2) ALL CABLES SHALL BE NEATLY TIE–WRAPPED, OUT OF THE WAY.
3) PROVIDE EXTENSION CABLES FOR THE VIDEO MONITOR, THE KEYBOARD, THE SPEAKERS, THE MOUSE, THE PRINTER AND THE LIKE. ALL DEVICE SHALL BE WIRED TO THE SCADA COMPUTER SYSTEMS.
4) COORDINATE WITH THE OWNER, ARRANGE EQUIPMENT PER OWNER'S INSTRUCTION.
5) INSTALLED IN REAR RACEWAY OF OPERATOR CONSOLE.

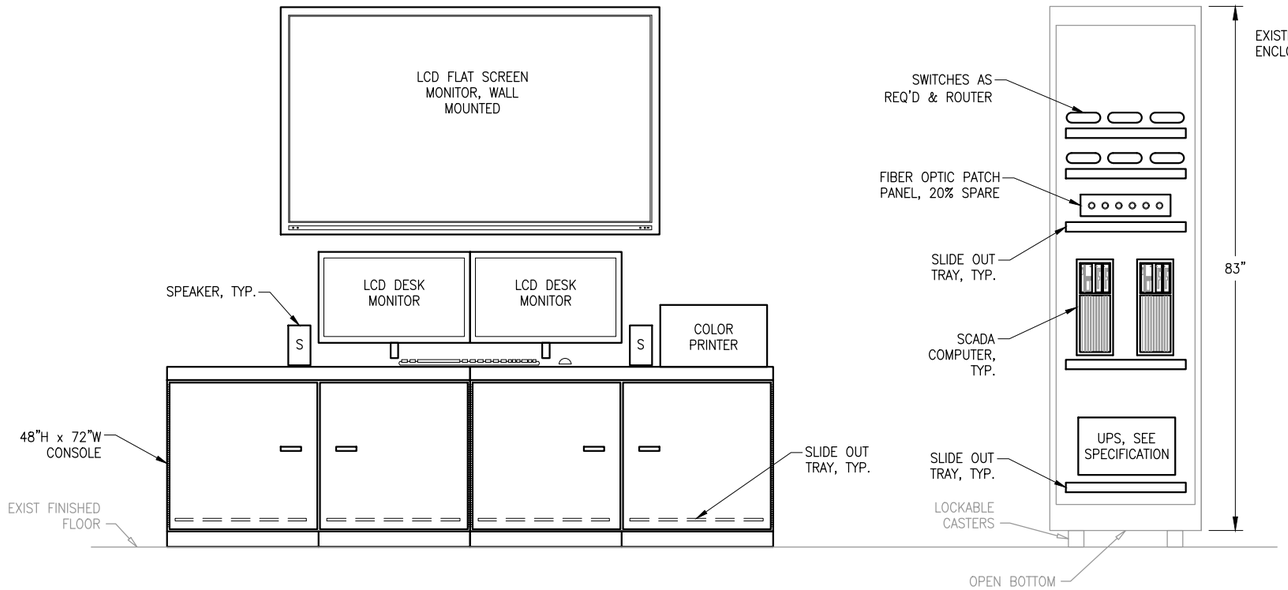


## NETWORK ELEVATION DETAIL

N.T.S.

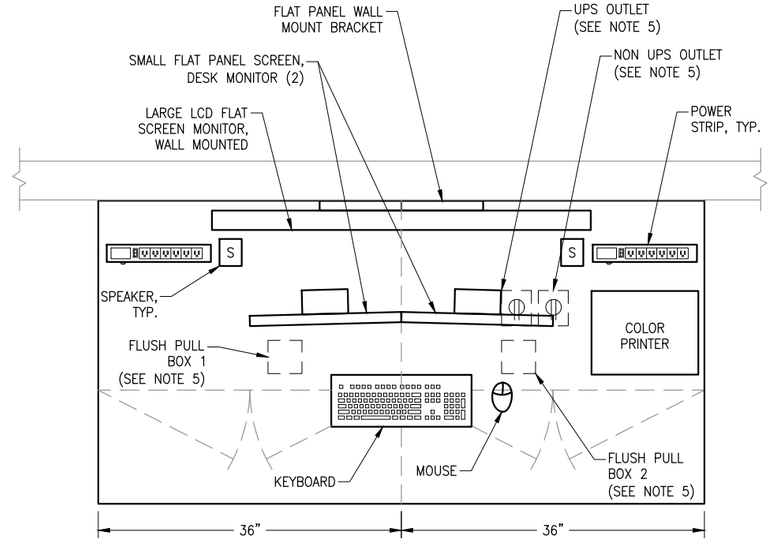


## PLAN VIEW

N.T.S,

**ECKLER ENGINEERING, INC.**
4700 RIVERSIDE DRIVE, SUITE 110 - CORAL SPRINGS, FL 33067
(954) 510-4700 - FAX (954) 755-2741
CA No. 7803

DSGN: D.K.HAMMANN
DR: M.SIQUEIRA
CHK: D. K. HAMMANN
APVD: D. K. HAMMANN

VERIFY SCALE
1"
BAR IS ONE INCH ON ORIGINAL DRAWING. ADJUST SCALES AS NECESSARY.

| No. | DATE | REVISIONS | BY | APVD |
|---|---|---|---|---|

C & W engineering
ELECTRICAL CONSULTANTS
2775 VISTA PARKWAY, SUITE G-6, WPB, FL. 33411
(561) 642-5333 FAX (561) 966-2293
EMAIL: CWEng@CWEng.US
LICENCE NO. CA0006245
CONSULTANT

99 - SIB PROJ. NO.

----
MICHAEL A. GUIDA, P.E.
FL #60755

**VILLAGE OF PALM SPRINGS**
SCADA SYSTEM UPGRADE MAIN WATER TREATMENT PLANT (MAIN WTP)
2021B-003

NETWORK CONSOLE DETAILS

DWG NO. 49 OF 70
SHEET E-14
PROJ. NO. 400-077.01
DATE AUGUST 26, 2020

File name: C:\Civil 3D Projects\400-077.01 - Scada System Upgrades Main and R. L. Pratt WTP\01_Working (Main)\400-077.01_E-13-MULTI.dwg; Plotted @: 12/23/2020 1:30:16 PM; Scale multiplier: 0.5; Printed by: Matheus Siqueira; Milestone: BID DOCUMENTS

BID DOCUMENTS

## N O T E S:

1) MOUNTED IN REAR RACEWAY OF OPERATOR CONSOLE.
2) CONFIRM MANUFACTURER AND PART NUMBER WITH NETWORK ENCLOSURE PROVIDER.
3) EXISTING CONDUIT, CABLE AND BOX FOR INTERNET CONNECTION.
4) NEATLY GROUP ALL NETWORK ENCLOSURE TO OPERATOR CONSOLE CONDUITS BEHIND ENCLOSURE TO ALLOW ENCLOSURE TO ROLL. CONDUITS SHALL BE FLUSH WITH EXISTING WALL.

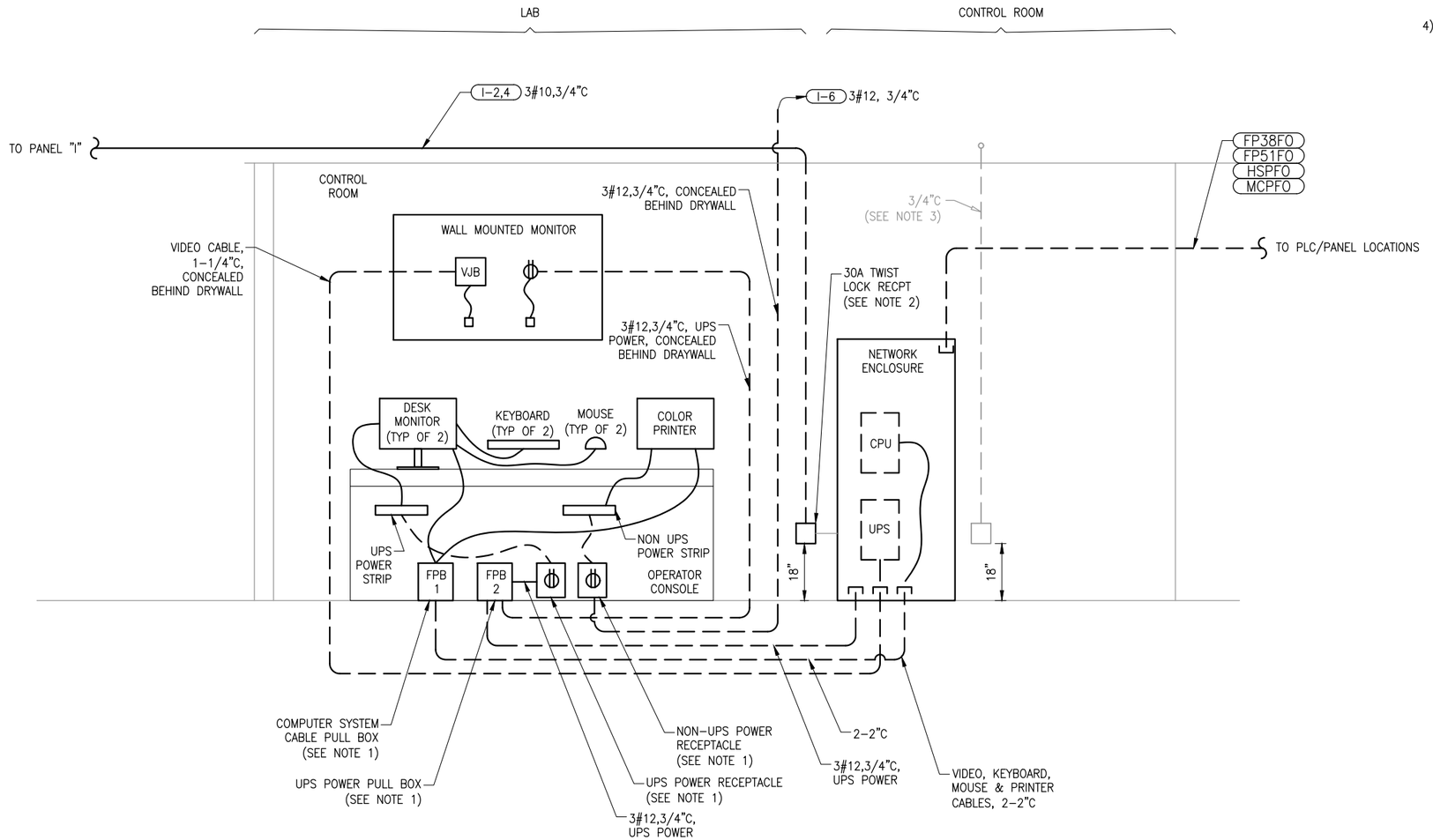


# NETWORK RISER DIAGRAM

N.T.S.


**ECKLER ENGINEERING, INC.**
4700 RIVERSIDE DRIVE, SUITE 110 - CORAL SPRINGS, FL 33067
(954) 510-4700 - FAX (954) 755-2741
CA No. 7803


| | |
|---|---|
| DSGN: | D.K.HAMMANN |
| DR: | M.SIQUEIRA |
| CHK: | D. K. HAMMANN |
| APVD: | D. K. HAMMANN |

VERIFY SCALE
1"
BAR IS ONE INCH ON ORIGINAL DRAWING. ADJUST SCALES AS NECESSARY.

| No. | DATE | REVISIONS | BY | APVD |
|---|---|---|---|---|


C & W engineering
ELECTRICAL CONSULTANTS
2775 VISTA PARKWAY, SUITE G-6, WPB, FL. 33411
(561) 642-5333 FAX (561) 966-2293
EMAIL: CWEng@CWEng.US
LICENCE NO. CA0006245
CONSULTANT

----
MICHAEL A. GUIDA, P.E.
FL #60755


**VILLAGE OF PALM SPRINGS**

SCADA SYSTEM UPGRADE MAIN WATER TREATMENT PLANT (MAIN WTP)
2021B-003

NETWORK RISER DIAGRAMS

| | |
|---|---|
| DWG NO. | 50 |
| OF | 70 |
| SHEET | E-15 |
| PROJ. NO. | 400-077.01 |
| DATE | AUGUST 26, 2020 |


File name: C:\Civil 3D Projects\400-077.01 - Scada System Upgrades Main and R. L. Pratt WTP\01_Working (Main)\400-077.01_E-13-MULTI.dwg; Plotted @: 12/23/2020 1:30:18 PM; Scale multiplier: 0.5; Printed by: Matheus Siqueira; Milestone: BID DOCUMENTS


BID DOCUMENTS

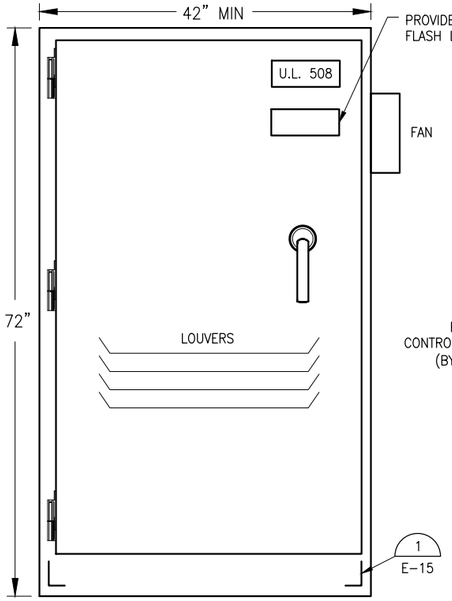


FRONT VIEW

N.T.S.

## NOTES

1) PANEL ENCLOSURE: NEMA 12, PIANO HINGE, 3PT PADLOCKABLE HANDLE WITH THERMOSTAT CONTROLLED COOLING FAN & FILTERS, U.L. 508, EXTERIOR FINISH SHALL BE IF50004 REFLECTIVE WHITE POLYESTOR COATING ON FRONT SIDES AND BACK.

2) CONTROL CABINET ENCLOSURE AND ACCESSORIES SHALL BE AS SPECIFIED IN SECTION 13700 – PROCESS INSTRUMENTATION AND COTNROLS.

3) 24" DEEP; DIMENSIONS SHOWN ARE MIN, FREE STANDING.

4) PLC SYSTEM COMPONENTS SHALL BE AS SPECIFIED IN SECTION 13710.

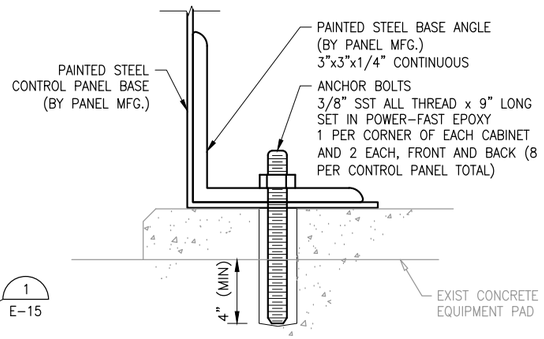


ANCHOR DETAIL 1

NTS

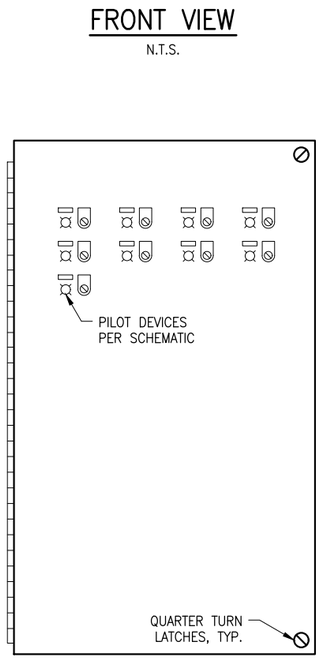


DEAD FRONT VIEW

N.T.S.

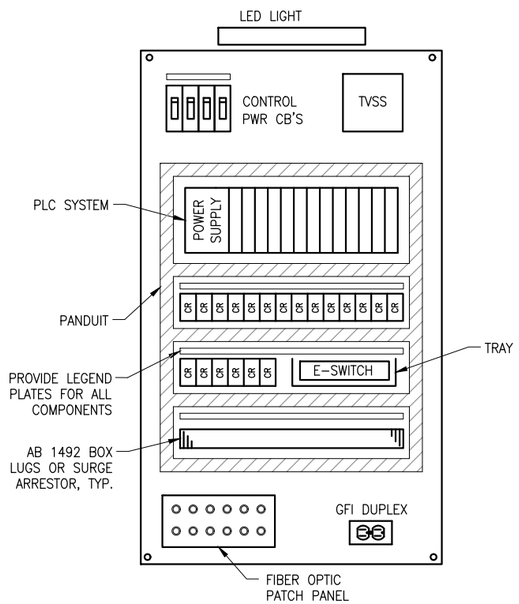


SUBPLATE LAYOUT

N.T.S.

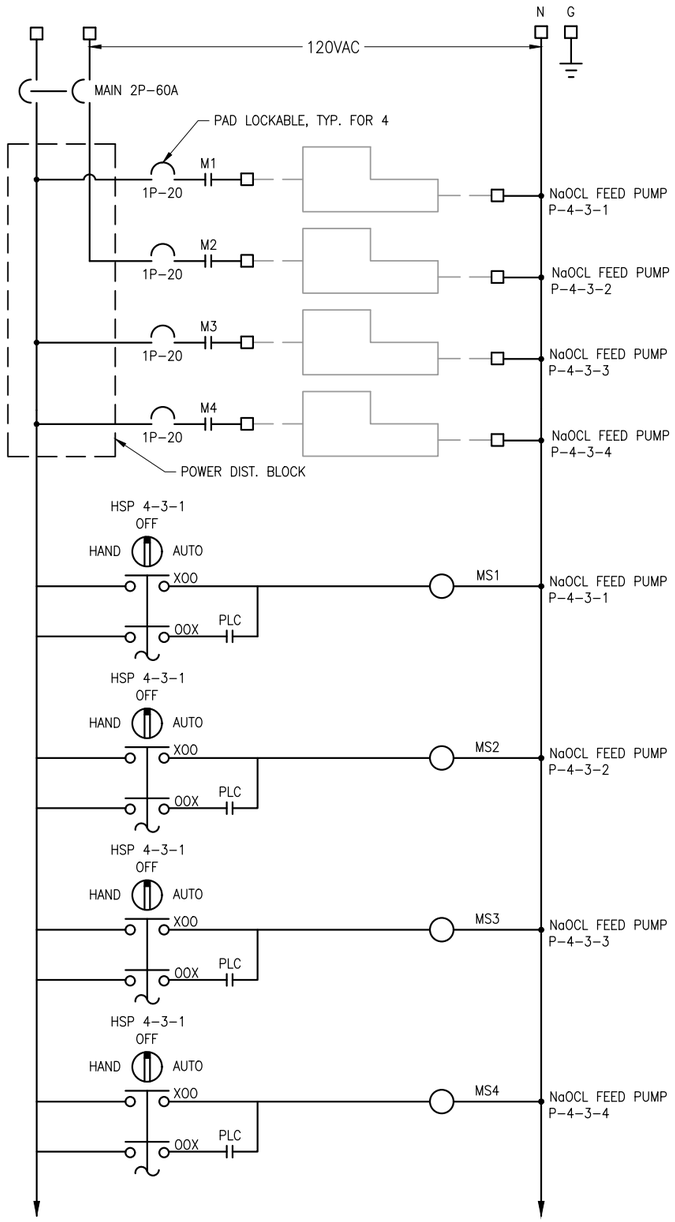


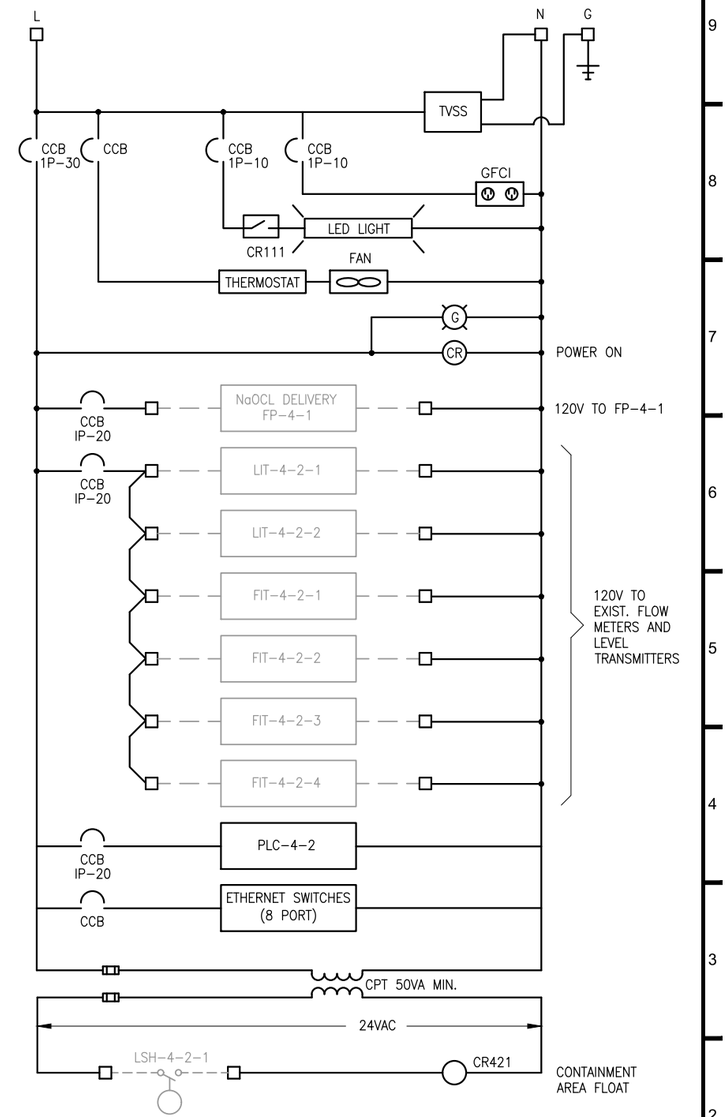



**ECKLER ENGINEERING, INC.**
4700 RIVERSIDE DRIVE, SUITE 110 - CORAL SPRINGS, FL 33067
(954) 510-4700 - FAX (954) 755-2741
CA No. 7803


| | |
|---|---|
| DSGN: | D.K.HAMMANN |
| DR: | M.SIQUEIRA |
| CHK: | D. K. HAMMANN |
| APVD: | D. K. HAMMANN |

VERIFY SCALE — 1" — BAR IS ONE INCH ON ORIGINAL DRAWING. ADJUST SCALES AS NECESSARY.

| No. | DATE | REVISIONS | BY | APVD |
|---|---|---|---|---|


C & W engineering
ELECTRICAL CONSULTANTS
2775 VISTA PARKWAY, SUITE G-6, WPB, FL. 33411
(561) 642-5333 FAX (561) 966-2293
EMAIL: CWEng@CWEng.US
LICENCE NO. CA0006245
CONSULTANT

----
MICHAEL A. GUIDA, P.E.
FL #60755


**VILLAGE OF PALM SPRINGS**

SCADA SYSTEM UPGRADE MAIN WATER TREATMENT PLANT (MAIN WTP)
2021B-003

FP-4-2 NaOCL FEED SYSTEM PANEL REPLACEMENT (SHEET 1)

| | |
|---|---|
| DWG NO. | 51 |
| OF | 70 |
| SHEET | E-16 |
| PROJ. NO. | 400-077.01 |
| DATE | AUGUST 26, 2020 |

BID DOCUMENTS


File name: C:\Civil 3D Projects\400-077.01 - Scada System Upgrades Main and R. L. Pratt WTP\01_Working (Main)\400-077.01_E-13-MULTI.dwg; Plotted @: 12/23/2020 1:30:19 PM; Scale multiplier: 0.5; Printed by: Matheus Siqueira; Milestone: BID DOCUMENTS

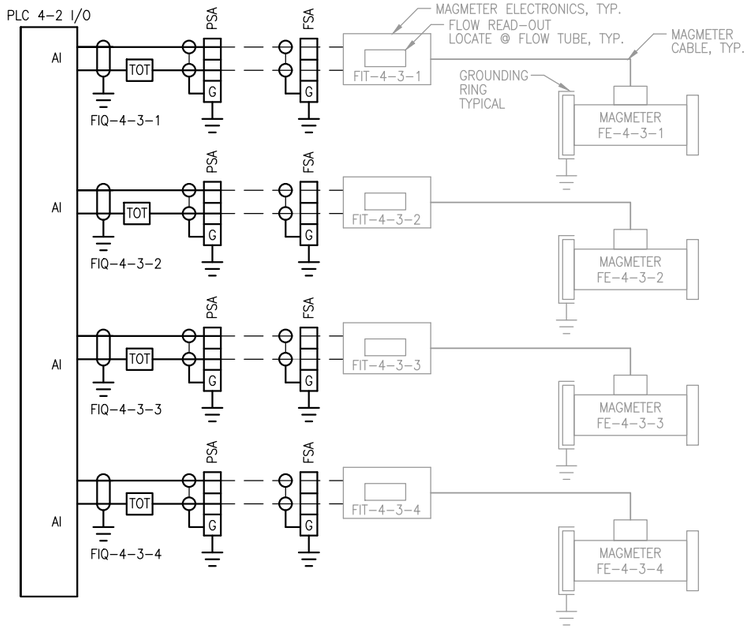


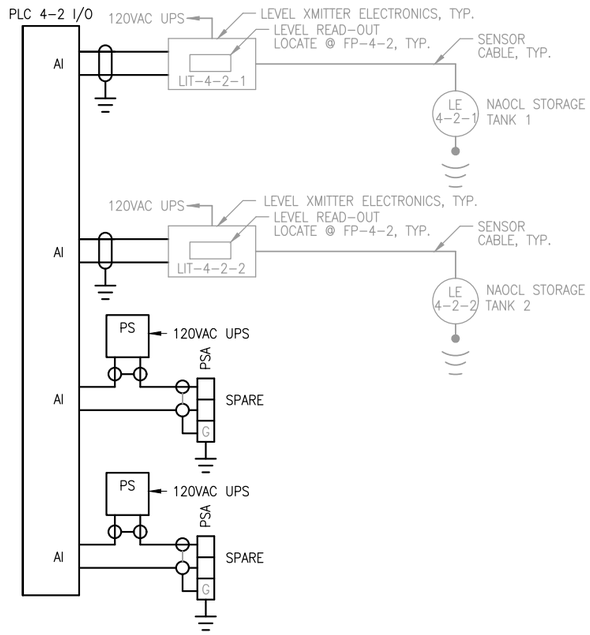


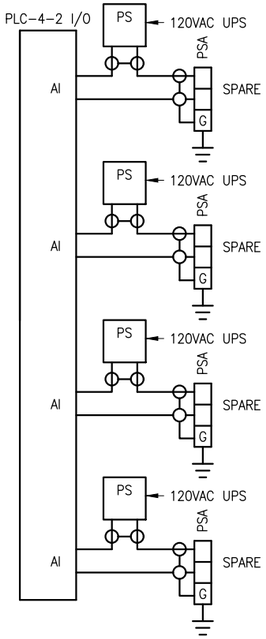


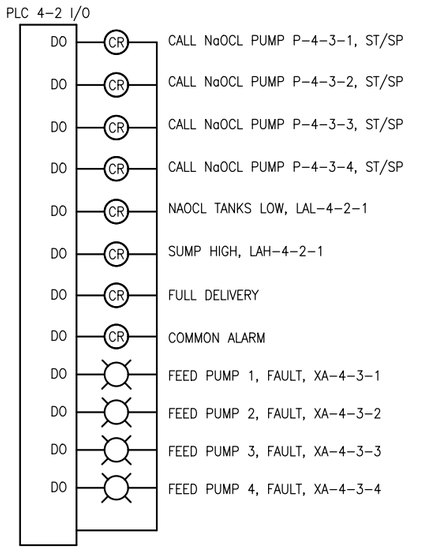


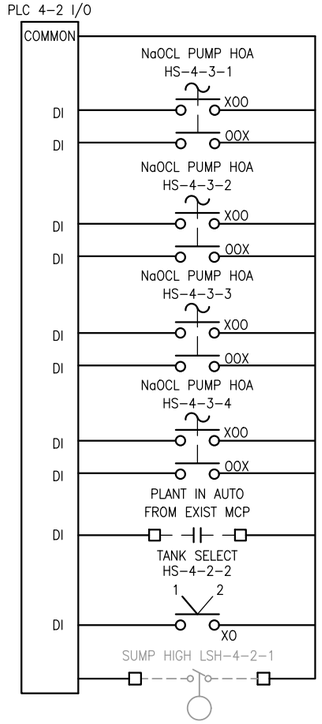


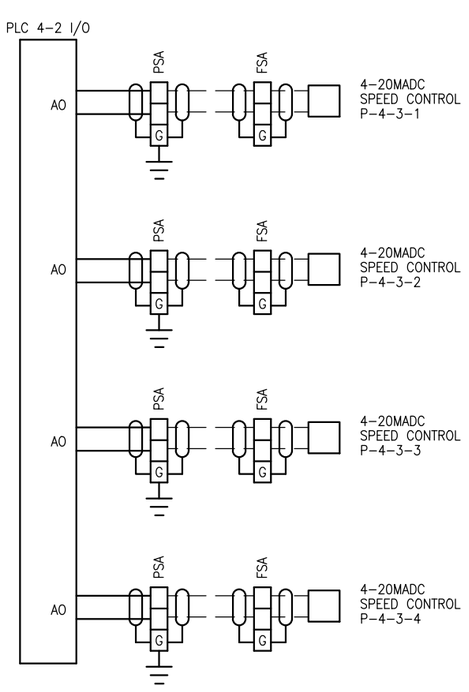


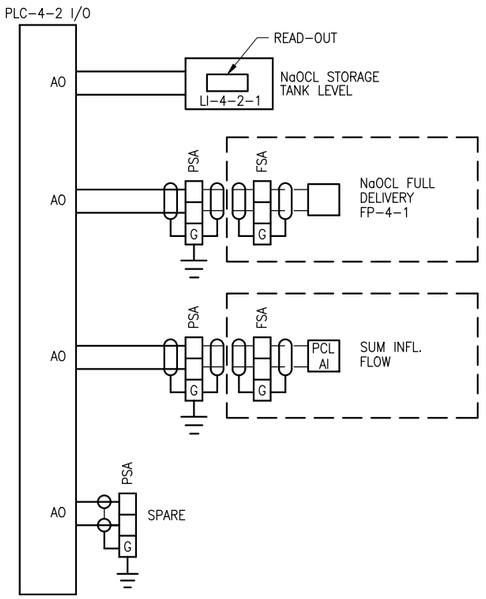


**ECKLER ENGINEERING, INC.**
4700 RIVERSIDE DRIVE, SUITE 110 - CORAL SPRINGS, FL 33067
(954) 510-4700 - FAX (954) 755-2741
CA No. 7803

| | |
|---|---|
| DSGN: | D.K.HAMMANN |
| DR: | M.SIQUEIRA |
| CHK: | D. K. HAMMANN |
| APVD: | D. K. HAMMANN |

VERIFY SCALE
1"
BAR IS ONE INCH ON ORIGINAL DRAWING. ADJUST SCALES AS NECESSARY.

| No. | DATE | REVISIONS | BY | APVD |
|---|---|---|---|---|

C & W engineering
ELECTRICAL CONSULTANTS
2775 VISTA PARKWAY, SUITE G-6, WPB, FL. 33411
(561) 642-5333 FAX (561) 966-2293
EMAIL: CWEng@CWEng.US
LICENCE NO. CA0006245
CONSULTANT

MICHAEL A. GUIDA, P.E.
FL #60755

**VILLAGE OF PALM SPRINGS**
SCADA SYSTEM UPGRADE MAIN WATER TREATMENT PLANT (MAIN WTP)
2021B-003

FP-4-2 NaOCL SYSTEM PANEL REPLACEMENT (SHEET 2)

| | |
|---|---|
| DWG NO. | 52 |
| OF | 70 |
| DATE | AUGUST 26, 2020 |
| SHEET | E-17 |
| PROJ. NO. | 400-077.01 |

File name: C:\Civil 3D Projects\400-077.01 - Scada System Upgrades Main and R. L. Pratt WTP\01_Working (Main)\400-077.01_E-17-MULTI.dwg; Plotted @: 12/23/2020 1:30:25 PM; Scale multiplier: 0.5; Printed by: Matheus Siqueira; Milestone: BID DOCUMENTS

BID DOCUMENTS

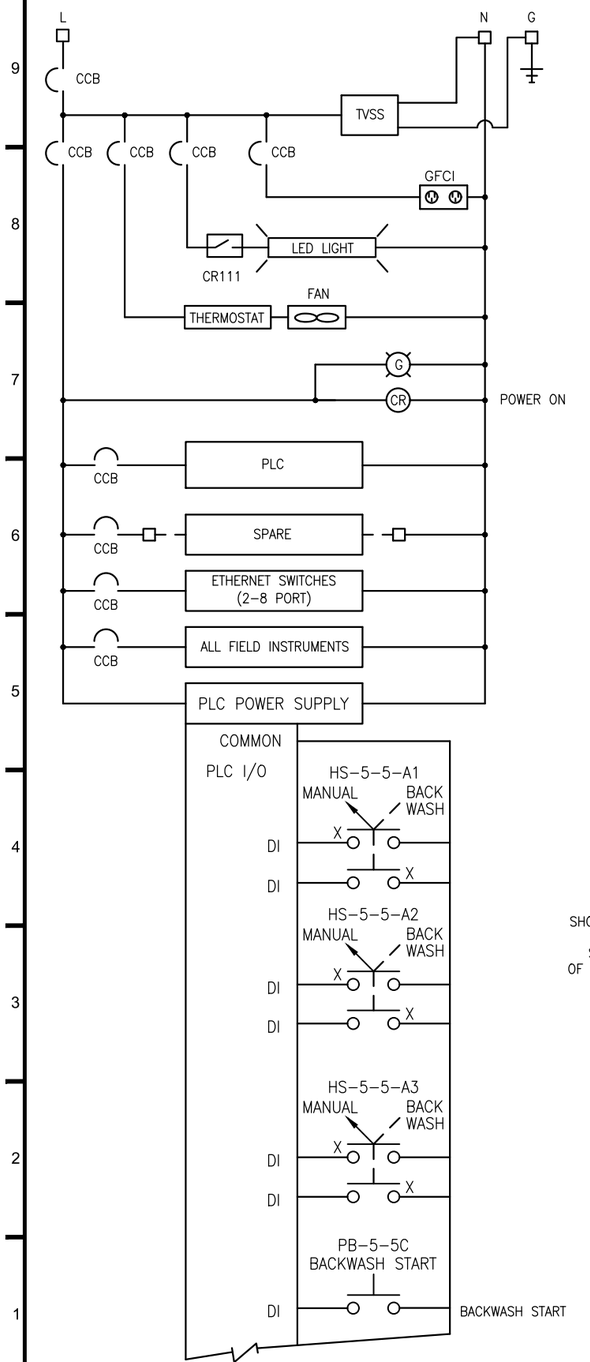


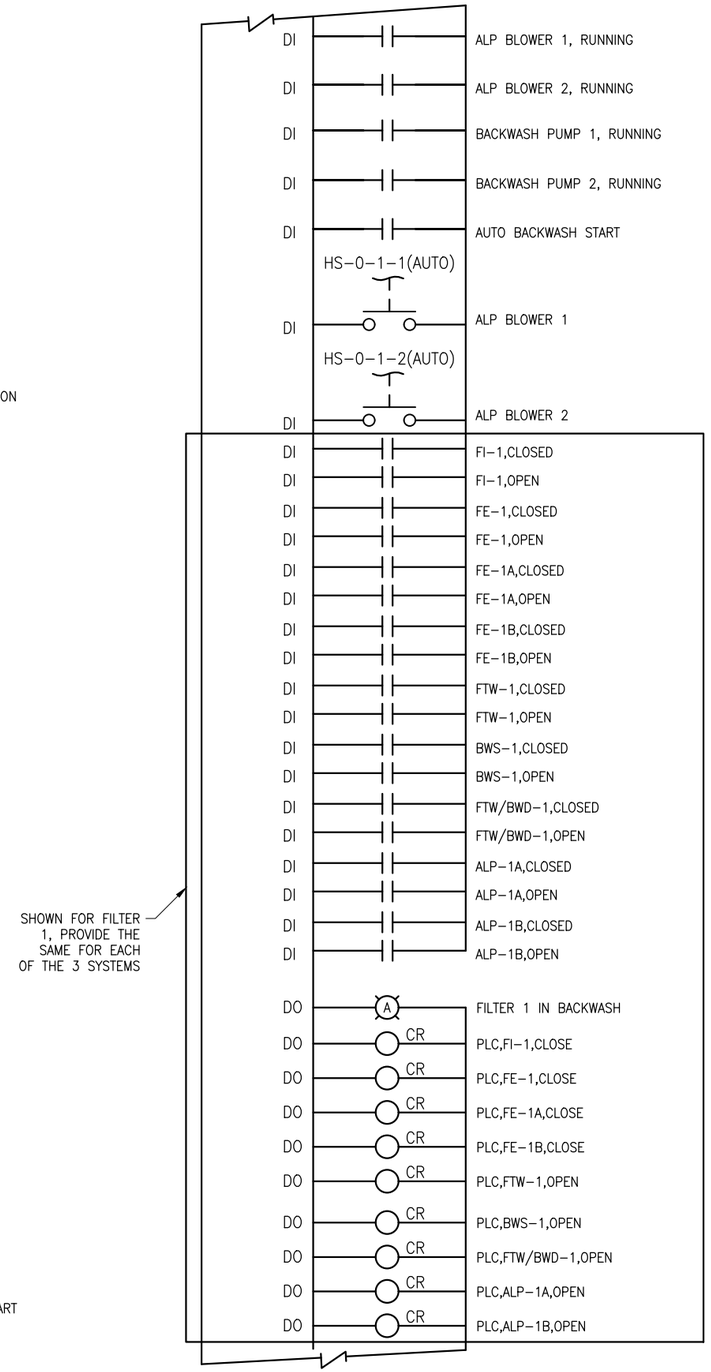


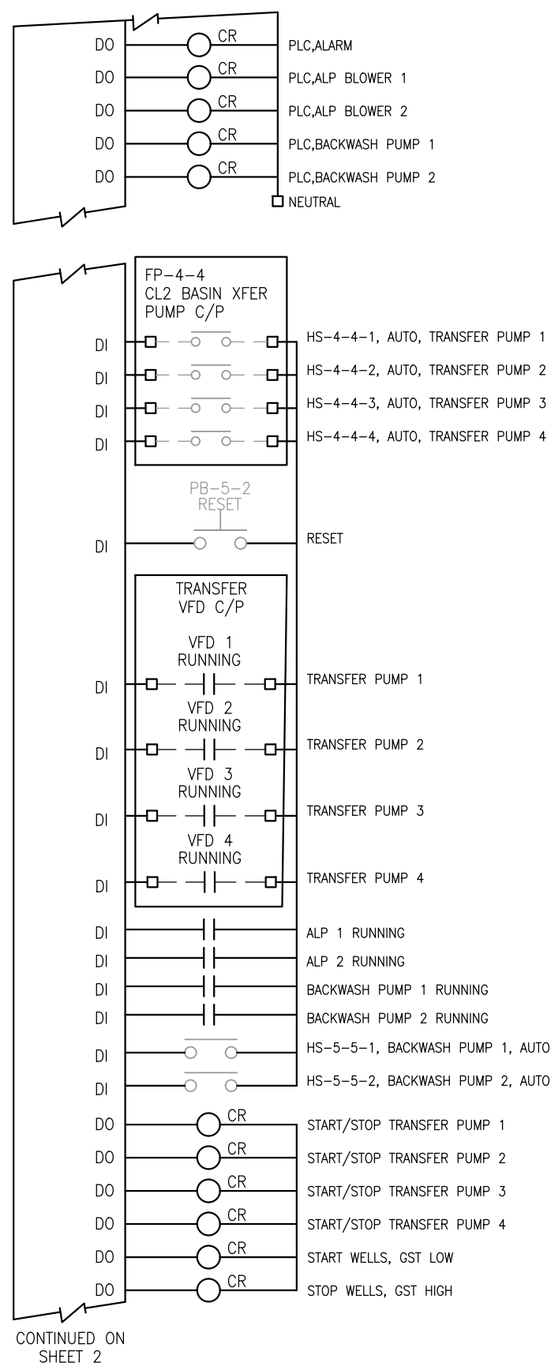


CONTINUED ON SHEET 2

## NOTES

1) THESE SCHEMATIC DRAWINGS REPRESENT A GENERAL LAYOUT OF THE FILTER CONTROL REQUIREMENTS AND PILOT DEVICES. I&C CONTRACTOR SHALL FIELD INVESTIGATE AND RE-ESTABLISH ALL CONTROLS AND OPERATIONS OF EXISTING FILTER CONTROL PANEL.

**ECKLER ENGINEERING, INC.**
4700 RIVERSIDE DRIVE, SUITE 110 - CORAL SPRINGS, FL 33067
(954) 510-4700 - FAX (954) 755-2741
CA No. 7803

DSGN: D.K.HAMMANN
DR: M.SIQUEIRA
CHK: D. K. HAMMANN
APVD: D. K. HAMMANN

VERIFY SCALE
1"
BAR IS ONE INCH ON ORIGINAL DRAWING. ADJUST SCALES AS NECESSARY.

| No. | DATE | REVISIONS | BY | APVD |
|---|---|---|---|---|

C & W engineering
ELECTRICAL CONSULTANTS
2775 VISTA PARKWAY, SUITE G-6, WPB, FL. 33411
(561) 642-5333 FAX (561) 966-2293
EMAIL: CWEng@CWEng.US
LICENCE NO. CA0006245
CONSULTANT

----
MICHAEL A. GUIDA, P.E.
FL #60755

**VILLAGE OF PALM SPRINGS**

SCADA SYSTEM UPGRADE MAIN WATER TREATMENT PLANT (MAIN WTP)
2021B-003

FP-5-1 FILTER CONTROL PANEL MODIFICATIONS (SHEET 1)

DWG NO. 53
SHEET E-18
OF 70
PROJ. NO. 400-077.01
DATE AUGUST 26, 2020

File name: C:\Civil 3D Projects\400-077.01 - Scada System Upgrades Main and R. L. Pratt WTP\01_Working (Main)\400-077.01_E-17-MULTI.dwg; Plotted @: 12/23/2020 1:30:26 PM; Scale multiplier: 0.5; Printed by: Matheus Siqueira; Milestone: BID DOCUMENTS

BID DOCUMENTS

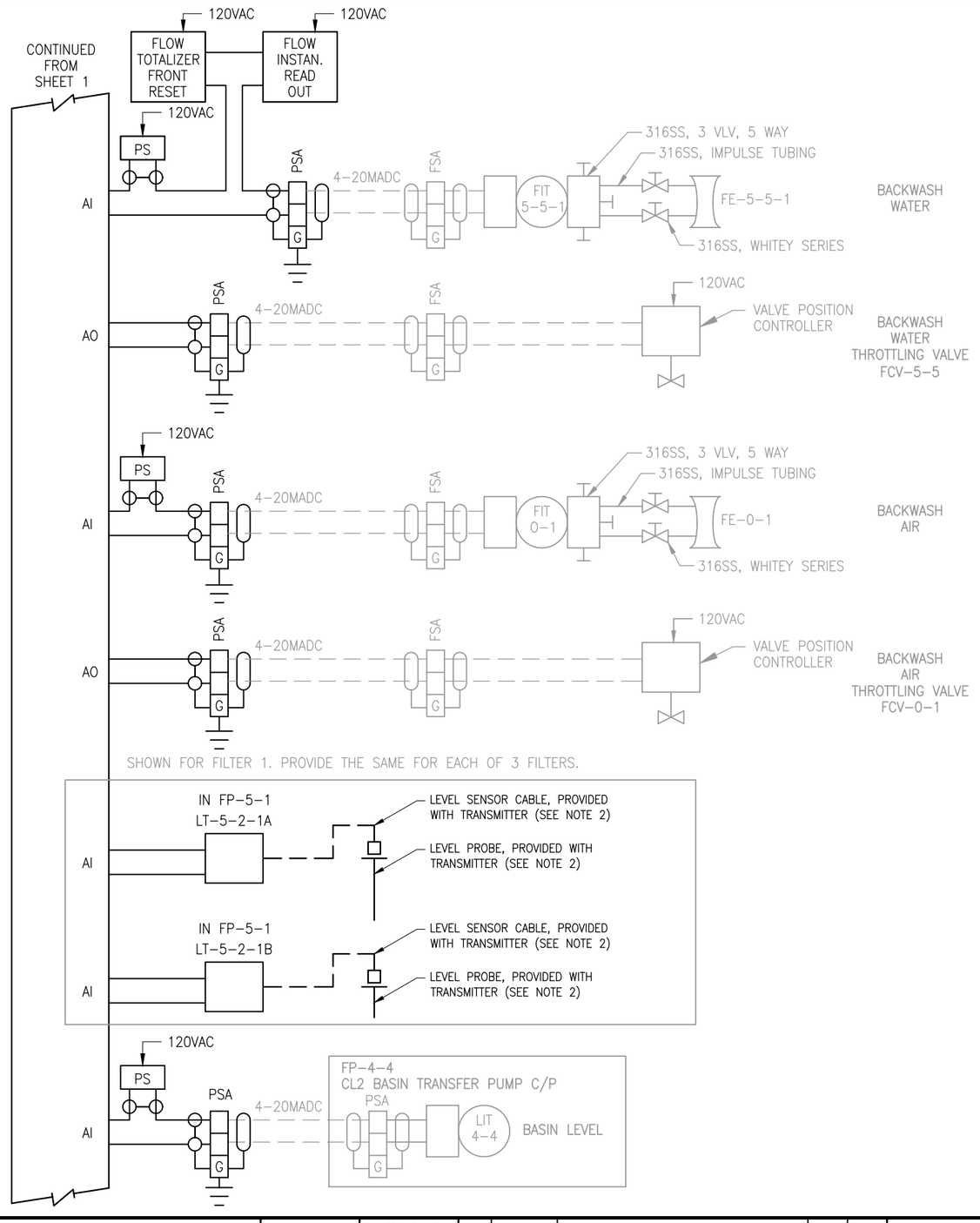


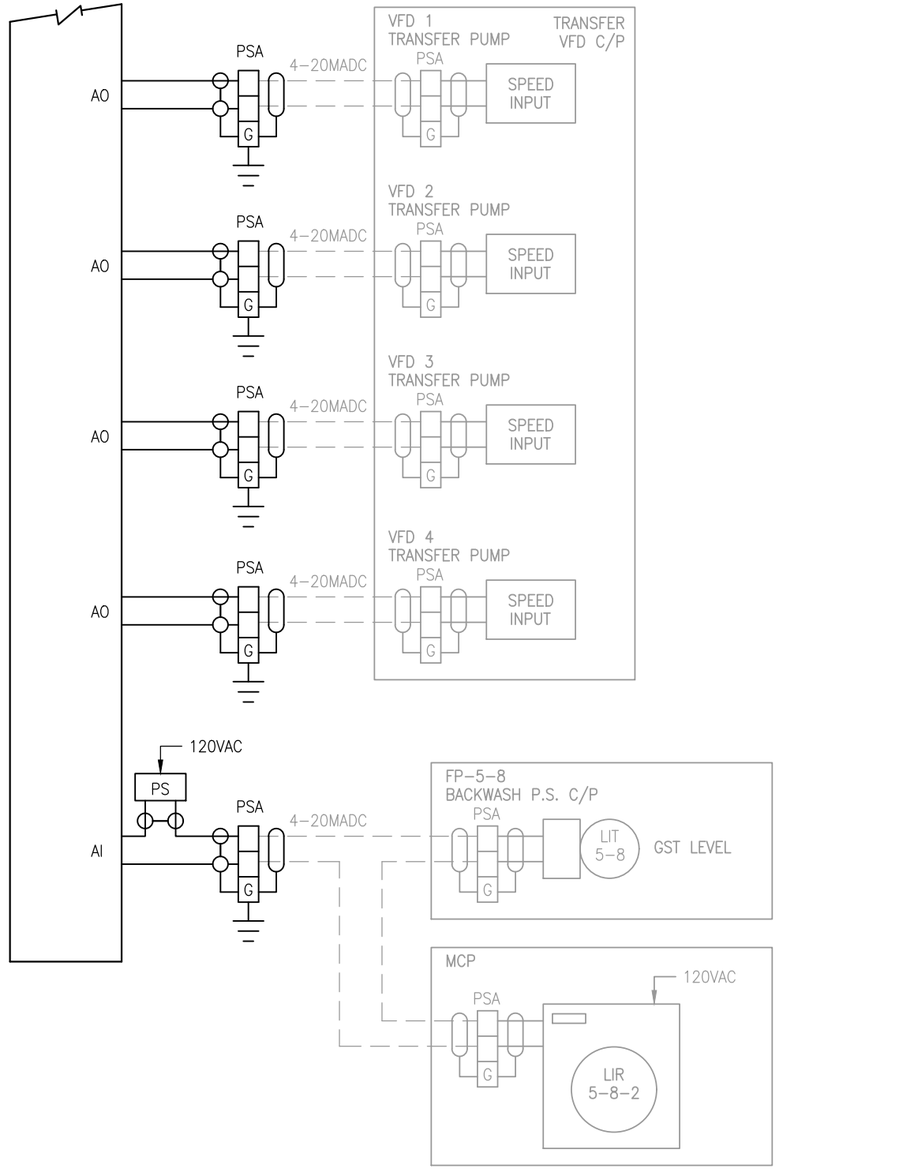


## N O T E S

1) THESE SCHEMATIC DRAWINGS REPRESENT A GENERAL LAYOUT OF THE FILTER CONTROL REQUIREMENTS AND PILOT DEVICES. I&C CONTRACTOR SHALL FIELD INVESTIGATE AND RE–ESTABLISH ALL CONTROLS AND OPERATIONS OF EXISTING FILTER CONTROL PANEL.
2) REMOVE/REPLACE CAPACITANCE PROBE. MATCH EXISTING.


**ECKLER ENGINEERING, INC.**
4700 RIVERSIDE DRIVE, SUITE 110 - CORAL SPRINGS, FL 33067
(954) 510-4700 - FAX (954) 755-2741
CA No. 7803


| | |
|---|---|
| DSGN: | D.K.HAMMANN |
| DR: | M.SIQUEIRA |
| CHK: | D. K. HAMMANN |
| APVD: | D. K. HAMMANN |

VERIFY SCALE
1"
BAR IS ONE INCH ON ORIGINAL DRAWING. ADJUST SCALES AS NECESSARY.

| No. | DATE | REVISIONS | BY | APVD |
|---|---|---|---|---|


C & W engineering
ELECTRICAL CONSULTANTS
2775 VISTA PARKWAY, SUITE G–6, WPB, FL. 33411
(561) 642–5333 FAX (561) 966–2293
EMAIL: CWEng@CWEng.US
LICENCE NO. CA0006245
CONSULTANT

----
MICHAEL A. GUIDA, P.E.
FL #60755


**VILLAGE OF PALM SPRINGS**
SCADA SYSTEM UPGRADE MAIN WATER TREATMENT PLANT (MAIN WTP)
2021B-003

FP-5-1 FILTER CONTROL PANEL MODIFICATIONS (SHEET 2)

| | |
|---|---|
| DWG NO. | 54 |
| OF | 70 |
| SHEET | E-19 |
| PROJ. NO. | 400-077.01 |
| DATE | AUGUST 26, 2020 |


File name: C:\Civil 3D Projects\400-077.01 - Scada System Upgrades Main and R. L. Pratt WTP\01_Working (Main)\400-077.01_E-17-MULTI.dwg; Plotted @: 12/23/2020 1:30:27 PM; Scale multiplier: 0.5; Printed by: Matheus Siqueira; Milestone: BID DOCUMENTS


BID DOCUMENTS

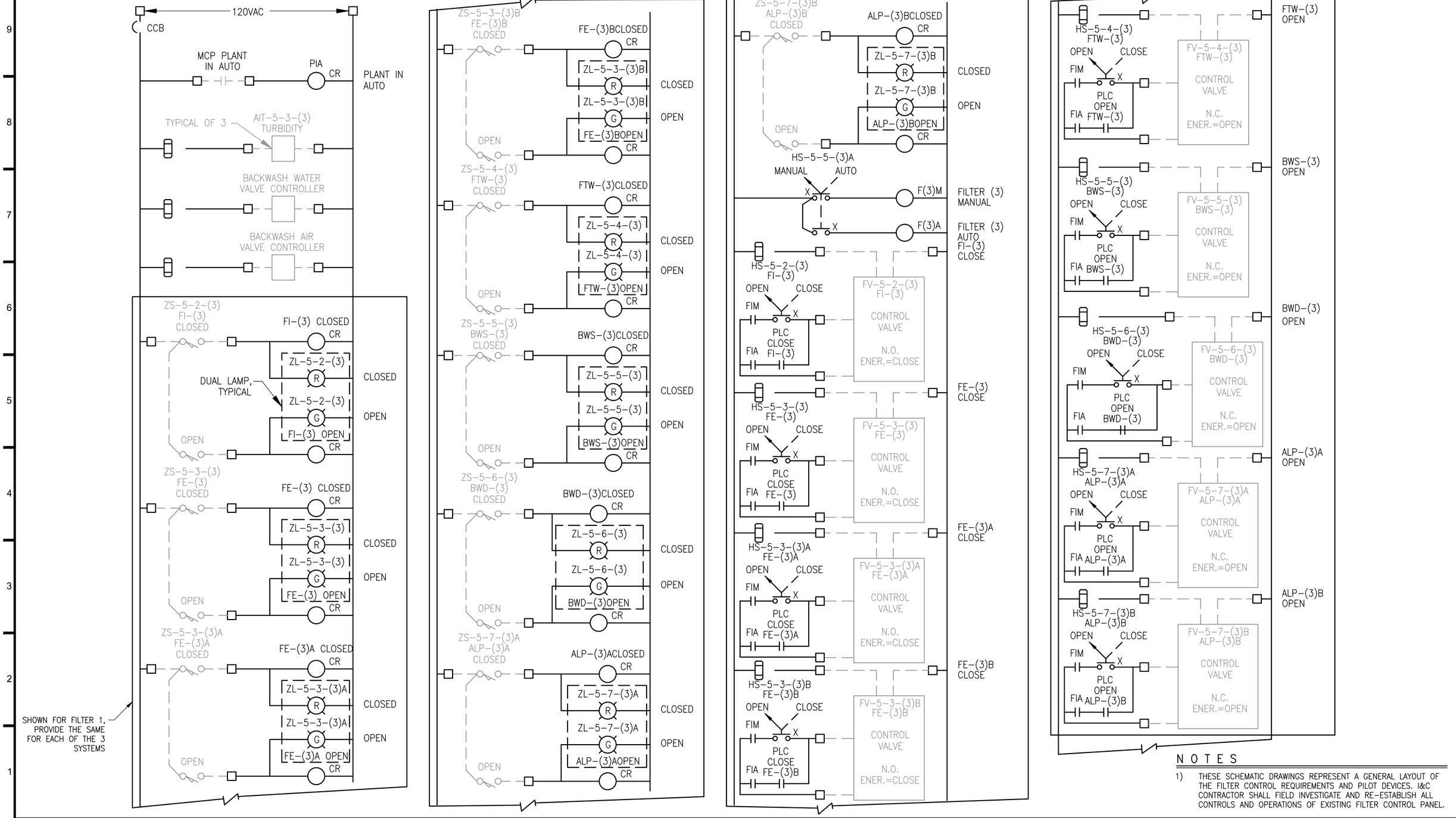


## NOTES

1) THESE SCHEMATIC DRAWINGS REPRESENT A GENERAL LAYOUT OF THE FILTER CONTROL REQUIREMENTS AND PILOT DEVICES. I&C CONTRACTOR SHALL FIELD INVESTIGATE AND RE-ESTABLISH ALL CONTROLS AND OPERATIONS OF EXISTING FILTER CONTROL PANEL.


**ECKLER ENGINEERING, INC.**
4700 RIVERSIDE DRIVE, SUITE 110 - CORAL SPRINGS, FL 33067
(954) 510-4700 - FAX (954) 755-2741
CA No. 7803


| | |
|---|---|
| DSGN: | D.K.HAMMANN |
| DR: | M.SIQUEIRA |
| CHK: | D. K. HAMMANN |
| APVD: | D. K. HAMMANN |

VERIFY SCALE — 1" — BAR IS ONE INCH ON ORIGINAL DRAWING. ADJUST SCALES AS NECESSARY.

| No. | DATE | REVISIONS | BY | APVD |
|---|---|---|---|---|


C & W engineering
ELECTRICAL CONSULTANTS
2775 VISTA PARKWAY, SUITE G-6, WPB, FL. 33411
(561) 642-5333 FAX (561) 966-2293
EMAIL: CWEng@CWEng.US
LICENCE NO. CA0006245
CONSULTANT

GS + SUB 2020 JUN 08

----
MICHAEL A. GUIDA, P.E.
FL #60755


**VILLAGE OF PALM SPRINGS**

SCADA SYSTEM UPGRADE MAIN WATER TREATMENT PLANT (MAIN WTP)
2021B-003

FP-5-1 FILTER CONTROL PANEL MODIFICATIONS (SHEET 3)

| | |
|---|---|
| DWG NO. | 55 |
| SHEET | E-20 |
| OF | 70 |
| PROJ. NO. | 400-077.01 |
| DATE | AUGUST 26, 2020 |


File name: C:\Civil 3D Projects\400-077.01 - Scada System Upgrades Main and R. L. Pratt WTP\01_Working (Main)\400-077.01_E-17-MULTI.dwg; Plotted @: 12/23/2020 1:30:29 PM; Scale multiplier: 0.5; Printed by: Matheus Siqueira; Milestone: BID DOCUMENTS


BID DOCUMENTS

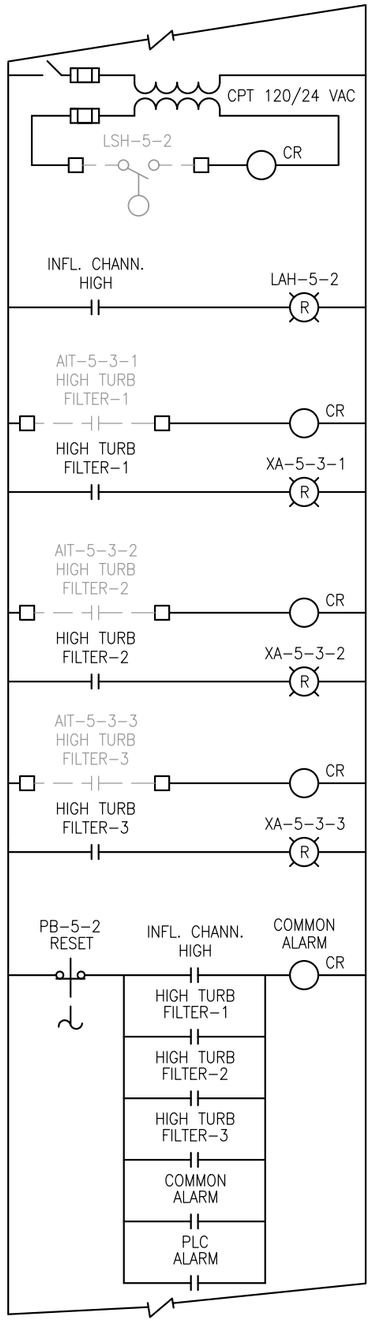


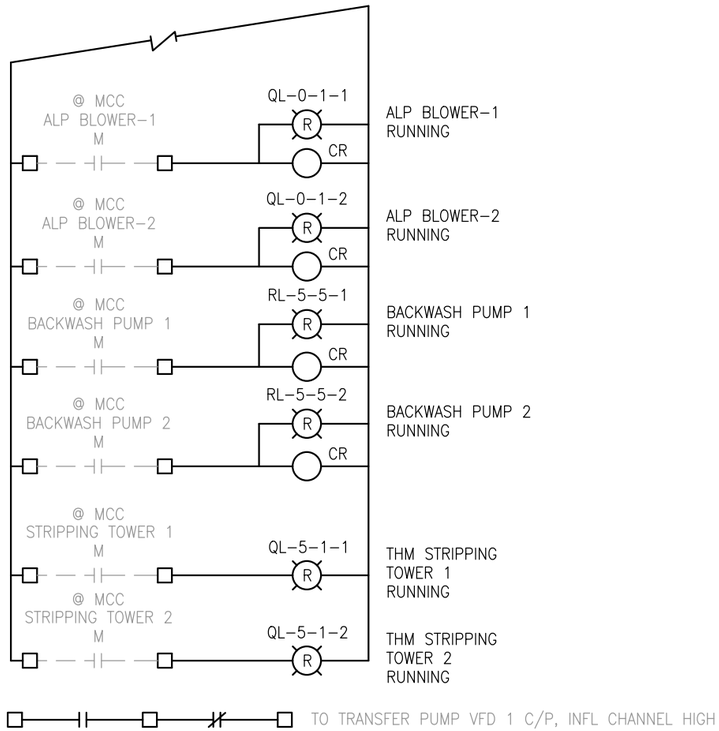


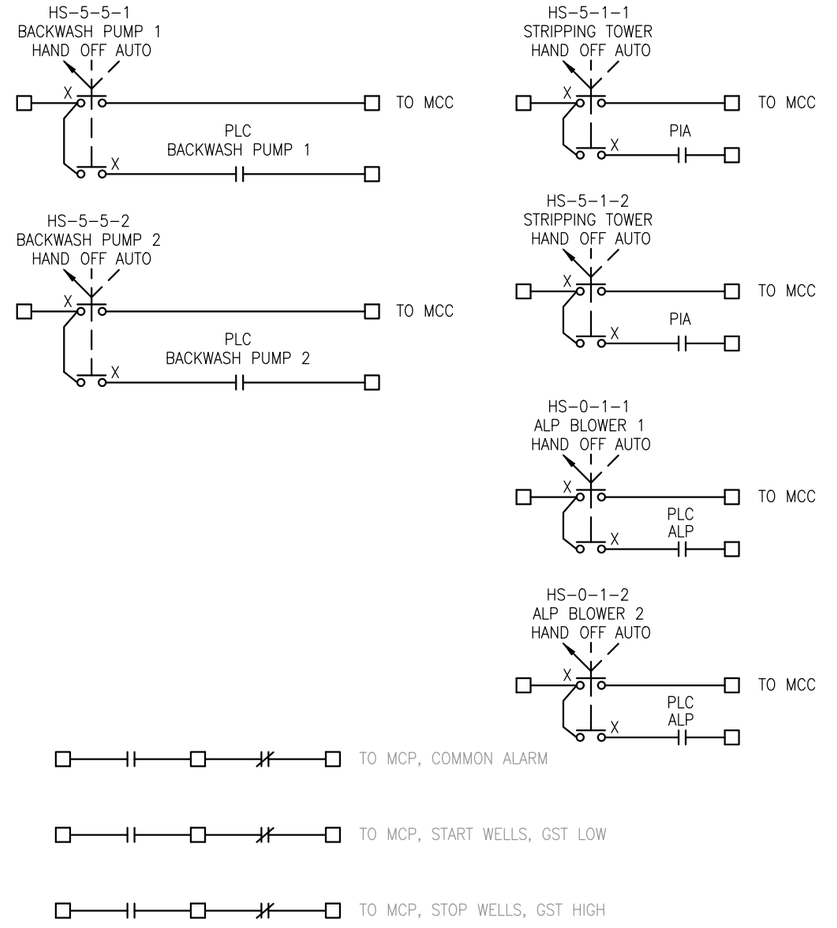


## NOTES

1) THESE SCHEMATIC DRAWINGS REPRESENT A GENERAL LAYOUT OF THE FILTER CONTROL REQUIREMENTS AND PILOT DEVICES. I&C CONTRACTOR SHALL FIELD INVESTIGATE AND RE-ESTABLISH ALL CONTROLS AND OPERATIONS OF EXISTING FILTER CONTROL PANEL.
2) REMOVE/REPLACE CAPACITANCE PROBE. MATCH EXISTING.


**ECKLER ENGINEERING, INC.**
4700 RIVERSIDE DRIVE, SUITE 110 - CORAL SPRINGS, FL 33067
(954) 510-4700 - FAX (954) 755-2741
CA No. 7803


DSGN: D.K.HAMMANN
DR: M.SIQUEIRA
CHK: D. K. HAMMANN
APVD: D. K. HAMMANN

VERIFY SCALE
1"
BAR IS ONE INCH ON ORIGINAL DRAWING. ADJUST SCALES AS NECESSARY.

| No. | DATE | REVISIONS | BY | APVD |
|---|---|---|---|---|


C & W engineering
ELECTRICAL CONSULTANTS
2775 VISTA PARKWAY, SUITE G-6, WPB, FL. 33411
(561) 642-5333 FAX (561) 966-2293
EMAIL: CWEng@CWEng.US
LICENCE NO. CA0006245
CONSULTANT

----
MICHAEL A. GUIDA, P.E.
FL #60755


**VILLAGE OF PALM SPRINGS**

SCADA SYSTEM UPGRADE MAIN WATER TREATMENT PLANT (MAIN WTP)
2021B-003

FP-5-1 FILTER CONTROL PANEL MODIFICATIONS (SHEET 4)

DWG NO. 56 OF 70
SHEET E-21
PROJ. NO. 400-077.01
DATE AUGUST 26, 2020


File name: C:\Civil 3D Projects\400-077.01 - Scada System Upgrades Main and R. L. Pratt WTP\01_Working (Main)\400-077.01_E-21-MULTI.dwg; Plotted @: 12/23/2020 1:30:34 PM; Scale multiplier: 0.5; Printed by: Matheus Siqueira; Milestone: BID DOCUMENTS


BID DOCUMENTS

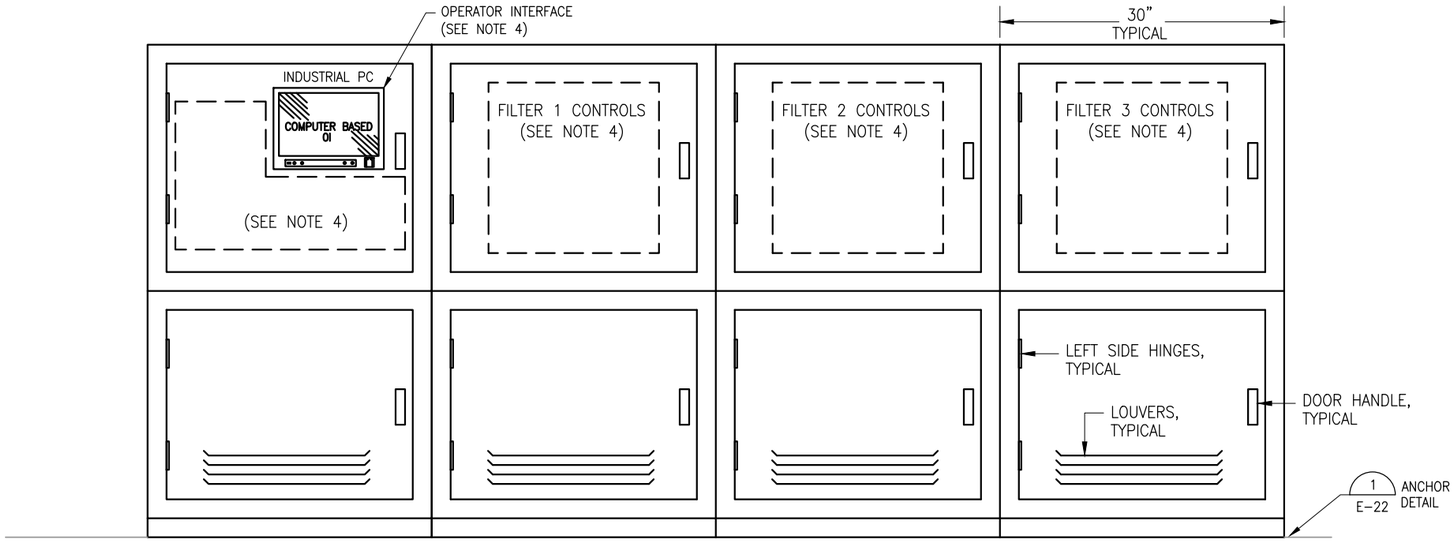


## FILTER CONTROL PANEL–FRONT VIEW

NTS

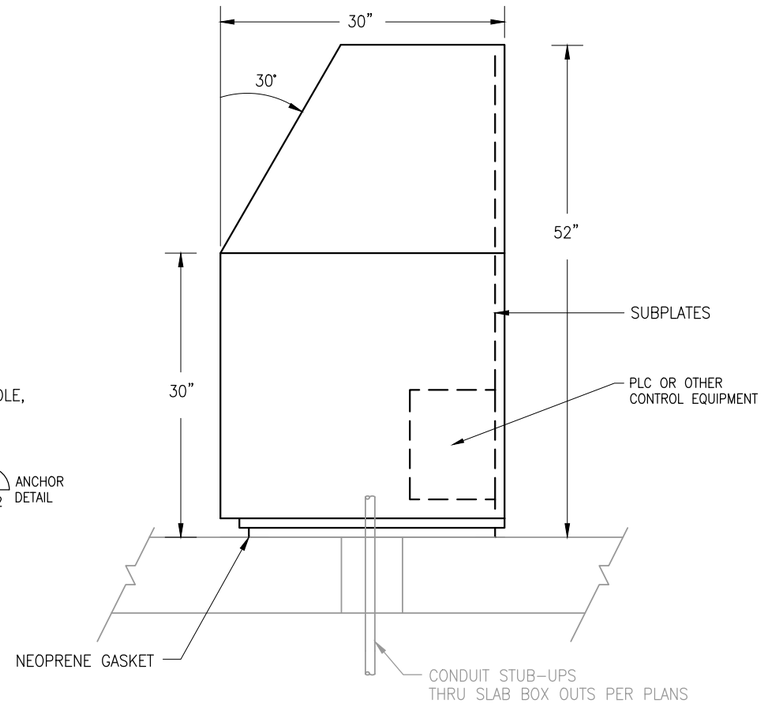


## FILTER CONTROL PANEL–RIGHT SIDE VIEW

NTS

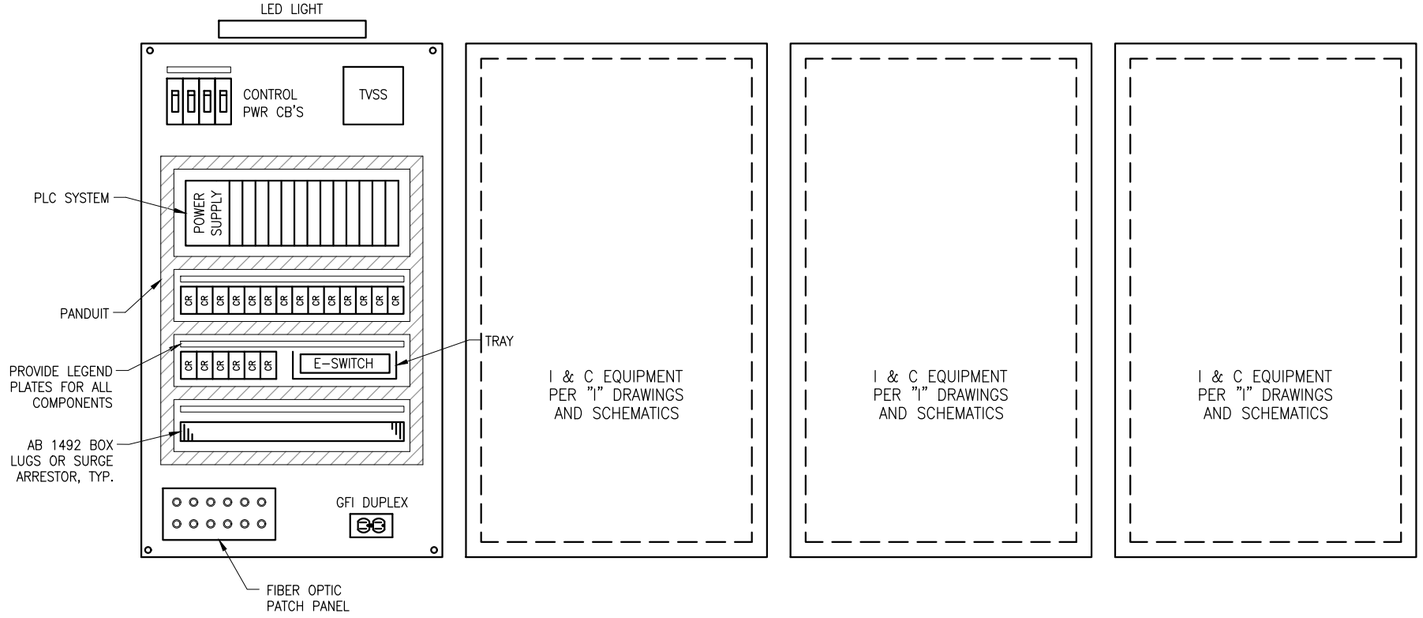


## FILTER CONTROL PANEL–SUBPLATE

NTS

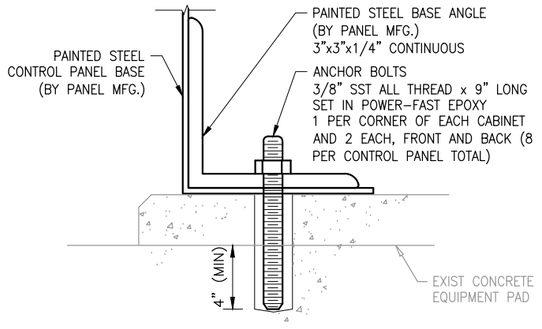


## ANCHOR DETAIL 1

NTS

## N O T E S

1) PANEL ENCLOSURE: NEMA 3R, WITH GASKET 316 SS, PIANO HINGE (5), 3PT PADLOCKABLE HANDLE (5) WITH THERMOSTAT CONTROLLED COOLING FAN & FILTERS, U.L. 508, EXTERIOR FINISH SHALL BE IF50004 REFLECTRIVE WHITE POLYESTER COATING ON FRONT, TOP, SIDES AND BACK.
2) CONTROL CABINET ENCLOSURE AND ACCESSORIES SHALL BE AS SPECIFIED IN SECTION 13700 – PROCESS INTRUMENTATION AND CONTROLS.
3) PLC SYSTEM COMPONENETS SHALL BE AS SPECIFIED IN SECTION 13710.
4) ALL CONTROLS AND INTERFACES SHALL BE MOUNTED ON DEAD FRONTS BEHIND OUTER FULL GASKETED, WATERTIGHT DOORS (PER NOTE 1).

**ECKLER ENGINEERING, INC.**
4700 RIVERSIDE DRIVE, SUITE 110 - CORAL SPRINGS, FL 33067
(954) 510-4700 - FAX (954) 755-2741
CA No. 7803

DSGN: D.K.HAMMANN
DR: M.SIQUEIRA
CHK: D. K. HAMMANN
APVD: D. K. HAMMANN

VERIFY SCALE
1"
BAR IS ONE INCH ON ORIGINAL DRAWING. ADJUST SCALES AS NECESSARY.

| No. | DATE | REVISIONS | BY | APVD |
|---|---|---|---|---|

C & W engineering
ELECTRICAL CONSULTANTS
2775 VISTA PARKWAY, SUITE G–6, WPB, FL. 33411
(561) 642–5333 FAX (561) 966–2293
EMAIL: CWEng@CWEng.US
LICENCE NO. CA0006245
CONSULTANT

----
MICHAEL A. GUIDA, P.E.
FL #60755

**VILLAGE OF PALM SPRINGS**

SCADA SYSTEM UPGRADE MAIN WATER TREATMENT PLANT (MAIN WTP)
2021B-003

FP-5-1 FILTER CONTROL PANEL MODIFICATIONS (SHEET 5)

DWG NO. 57 | SHEET E-22
OF 70 | PROJ. NO. 400-077.01
DATE AUGUST 26, 2020

File name: C:\Civil 3D Projects\400-077.01 - Scada System Upgrades Main and R. L. Pratt WTP\01_Working (Main)\400-077.01_E-21-MULTI.dwg; Plotted @: 12/23/2020 1:30:36 PM; Scale multiplier: 0.5; Printed by: Matheus Siqueira; Milestone: BID DOCUMENTS

BID DOCUMENTS

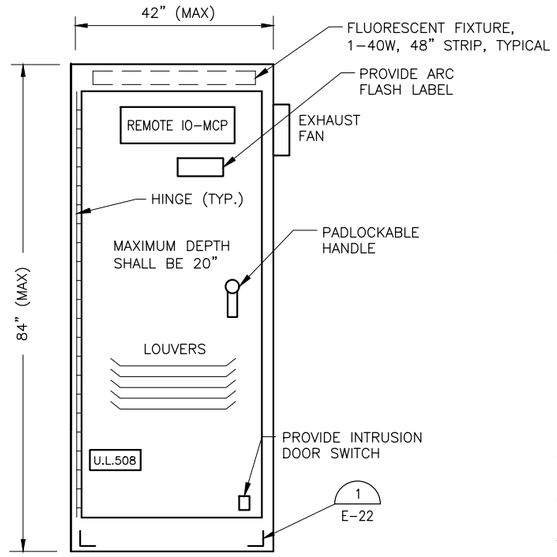


## DEAD FRONT VIEW

N.T.S.

## NOTES

1) REMOTE IO-MCP ENCLOSURE: NEMA 1, PIANO HINGE, 3PT PADLOCKABLE WITH COOLING FAN & FILTERS, U.L. 508,

2) CONTROL CABINET ENCLOSURE AND ACCESSORIES SHALL BE AS SPECIFIED IN SECTION 13700 – PROCESS INSTRUMENTATION AND CONTROLS.

3) PROVIDE THERMOSTAT CONTROLLED COOLING FAN.

## SPECIFIC NOTES

(1) SURGE SUPPRESSION INC. CKLA SERIES OR EQUAL.




## SUBPLATE LAYOUT

N.T.S.

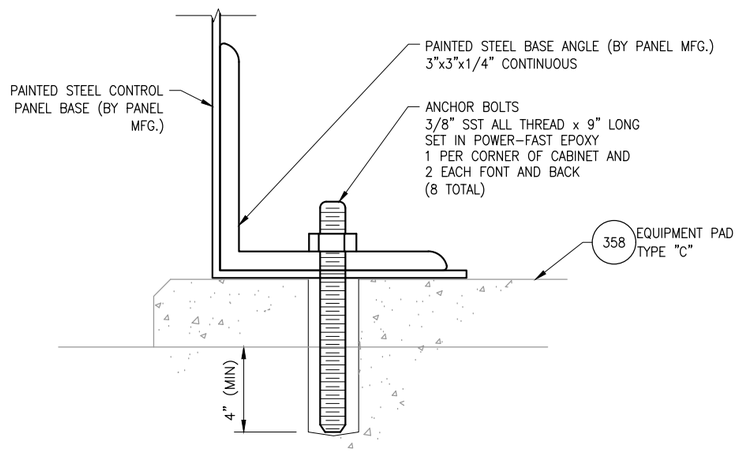


## ANCHOR DETAIL 1

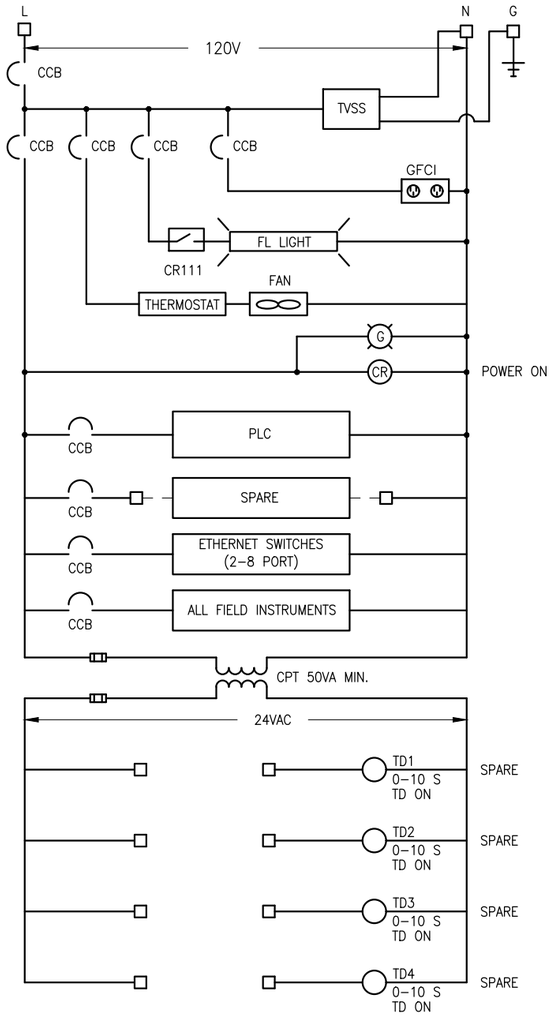


## SCHEMATIC

**ECKLER ENGINEERING, INC.**
4700 RIVERSIDE DRIVE, SUITE 110 - CORAL SPRINGS, FL 33067
(954) 510-4700 - FAX (954) 755-2741
CA No. 7803

DSGN: D.K.HAMMANN
DR: M.SIQUEIRA
CHK: D. K. HAMMANN
APVD: D. K. HAMMANN

VERIFY SCALE
1"
BAR IS ONE INCH ON ORIGINAL DRAWING. ADJUST SCALES AS NECESSARY.

| No. | DATE | REVISIONS | BY | APVD |
|---|---|---|---|---|

C & W engineering
ELECTRICAL CONSULTANTS
2775 VISTA PARKWAY, SUITE G-6, WPB, FL. 33411
(561) 642-5333 FAX (561) 966-2293
EMAIL: CWEng@CWEng.US
LICENCE NO. CA0006245
CONSULTANT

99 - SUB PROJ. NO

---
MICHAEL A. GUIDA, P.E.
FL #60755

**VILLAGE OF PALM SPRINGS**
SCADA SYSTEM UPGRADE MAIN WATER TREATMENT PLANT (MAIN WTP)
2021B-003

REMOTE IO - MCP (SHEET 1)

DWG NO. 58 | SHEET E-23
OF 70 | PROJ. NO. 400-077.01
DATE AUGUST 26, 2020

BID DOCUMENTS

File name: C:\Civil 3D Projects\400-077.01 - Scada System Upgrades Main and R. L. Pratt WTP\01_Working (Main)\400-077.01_E-21-MULTI.dwg; Plotted @: 12/23/2020 1:30:37 PM; Scale multiplier: 0.5; Printed by: Matheus Siqueira; Milestone: BID DOCUMENTS

PROVIDE ALL I/O PER I-DRAWINGS
TO BE CONFIRMED BY CONTRACTOR
DURING SHOP DRAWING PHASE

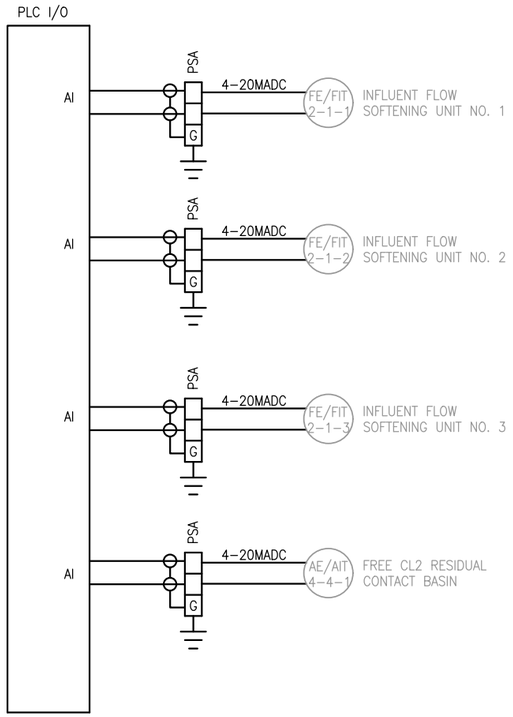


AI LOOP DIAGRAM

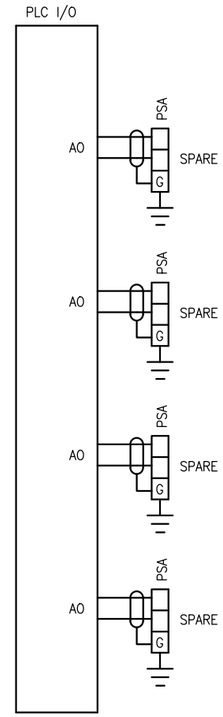


AO LOOP DIAGRAM

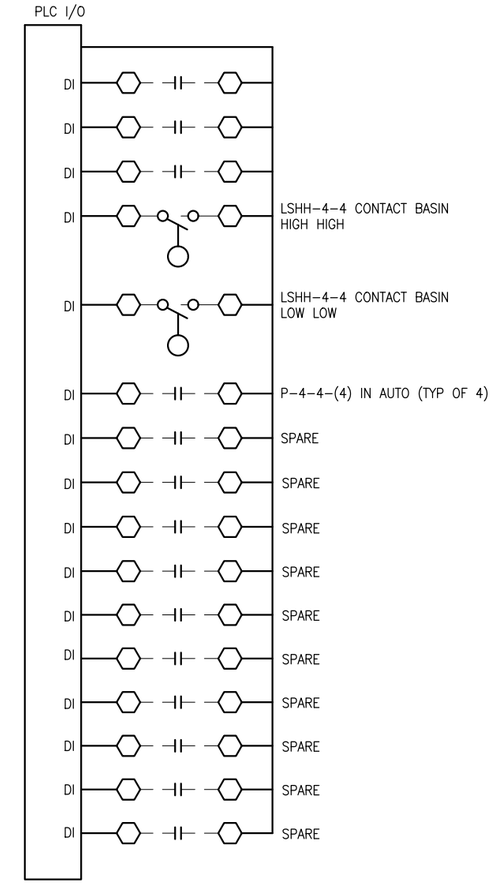


DI DIAGRAMS

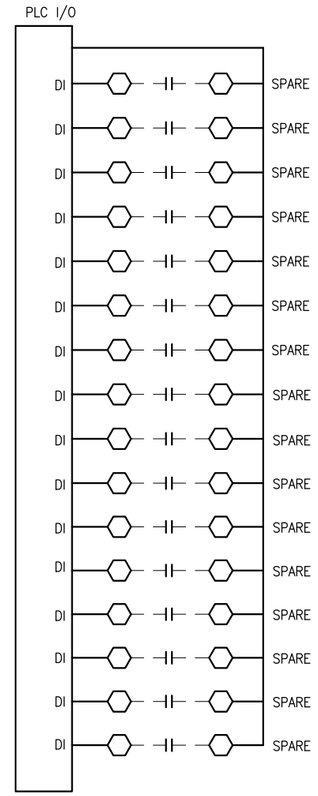


DI DIAGRAMS


**ECKLER ENGINEERING, INC.**
4700 RIVERSIDE DRIVE, SUITE 110 - CORAL SPRINGS, FL 33067
(954) 510-4700 - FAX (954) 755-2741
CA No. 7803


| | |
|---|---|
| DSGN: | D.K.HAMMANN |
| DR: | M.SIQUEIRA |
| CHK: | D. K. HAMMANN |
| APVD: | D. K. HAMMANN |

VERIFY SCALE
1"
BAR IS ONE INCH ON ORIGINAL DRAWING. ADJUST SCALES AS NECESSARY.

| No. | DATE | REVISIONS | BY | APVD |
|---|---|---|---|---|


C & W engineering
ELECTRICAL CONSULTANTS
2775 VISTA PARKWAY, SUITE G-6, WPB, FL. 33411
(561) 642-5333 FAX (561) 966-2293
EMAIL: CWEng@CWEng.US
LICENCE NO. CA0006245
CONSULTANT

----
MICHAEL A. GUIDA, P.E.
FL #60755


**VILLAGE OF PALM SPRINGS**

SCADA SYSTEM UPGRADE MAIN WATER TREATMENT PLANT (MAIN WTP)
2021B-003

REMOTE IO - MCP (SHEET 2)

| | |
|---|---|
| DWG NO. | 59 |
| OF | 70 |
| DATE | AUGUST 26, 2020 |
| SHEET | E-24 |
| PROJ. NO. | 400-077.01 |


File name: C:\Civil 3D Projects\400-077.01 - Scada System Upgrades Main and R. L. Pratt WTP\01_Working (Main)\400-077.01_E-21-MULTI.dwg; Plotted @: 12/23/2020 1:30:38 PM; Scale multiplier: 0.5; Printed by: Matheus Siqueira; Milestone: BID DOCUMENTS


BID DOCUMENTS

PROVIDE ALL I/O PER I-DRAWINGS
TO BE CONFIRMED BY CONTRACTOR
DURING SHOP DRAWING PHASE

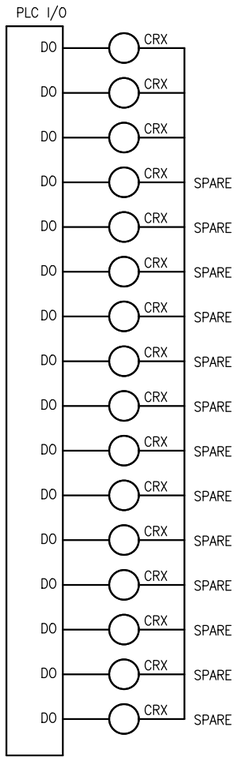


DO DIAGRAMS

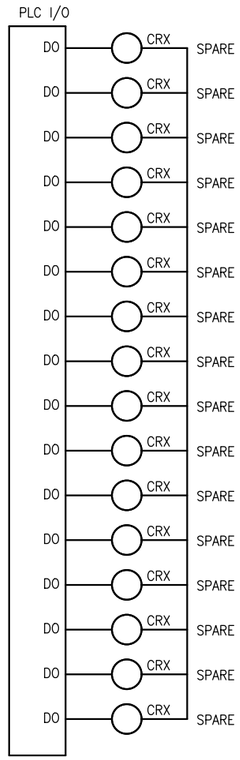


DO DIAGRAMS

**ECKLER ENGINEERING, INC.**
4700 RIVERSIDE DRIVE, SUITE 110 - CORAL SPRINGS, FL 33067
(954) 510-4700 - FAX (954) 755-2741
CA No. 7803

DSGN: D.K.HAMMANN
DR: M.SIQUEIRA
CHK: D. K. HAMMANN
APVD: D. K. HAMMANN

VERIFY SCALE
1"
BAR IS ONE INCH ON ORIGINAL DRAWING. ADJUST SCALES AS NECESSARY.

| No. | DATE | REVISIONS | BY | APVD |
|---|---|---|---|---|

C & W engineering
ELECTRICAL CONSULTANTS
2775 VISTA PARKWAY, SUITE G-6, WPB, FL. 33411
(561) 642-5333 FAX (561) 966-2293
EMAIL: CWEng@CWEng.US
LICENCE NO. CA0006245
CONSULTANT

99 SIB REQUIRED

----
MICHAEL A. GUIDA, P.E.
FL #60755

**VILLAGE OF PALM SPRINGS**
SCADA SYSTEM UPGRADE MAIN WATER TREATMENT PLANT (MAIN WTP)
2021B-003

REMOTE IO - MCP (SHEET 3)

DWG NO. 60 | SHEET E-25
OF 70 | PROJ. NO. 400-077.01
DATE AUGUST 26, 2020

File name: C:\Civil 3D Projects\400-077.01 - Scada System Upgrades Main and R. L. Pratt WTP\01_Working (Main)\400-077.01_E-21-MULTI.dwg; Plotted @: 12/23/2020 1:30:40 PM; Scale multiplier: 0.5; Printed by: Matheus Siqueira; Milestone: BID DOCUMENTS

BID DOCUMENTS

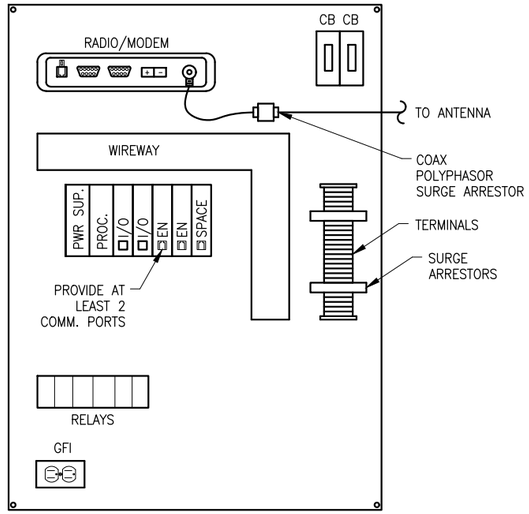


SUBPLATE VIEW

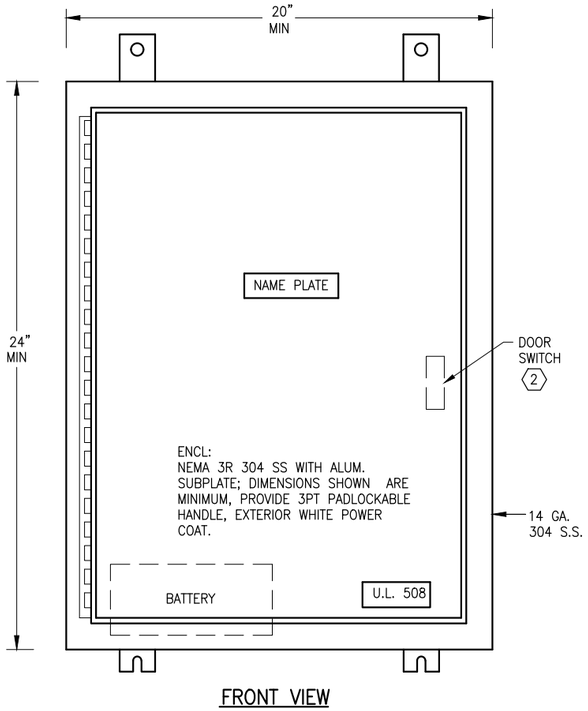


FRONT VIEW

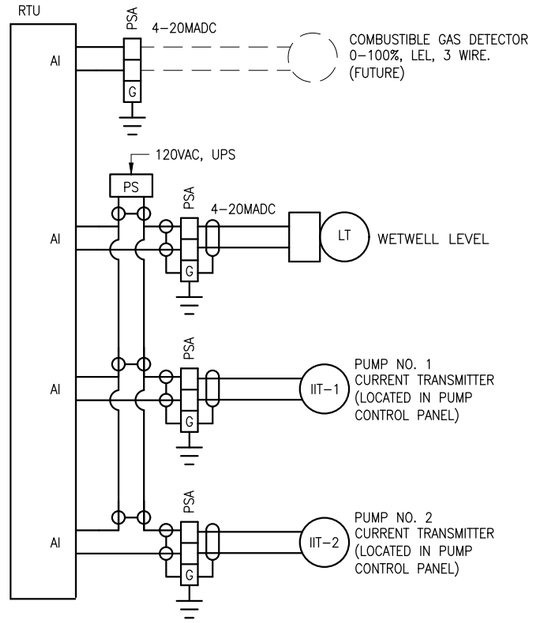


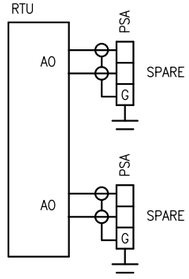


## SPECIFIC NOTES

1. RTU SHALL BE AS SPECIFIED IN SECTION 13751 – RTU SUB SYSTEM.
2. DOOR SWITCH ACTUATES WHEN OUTER DOOR IS OPEN.
3. CONFIRM ALL I/O WITH REQUIREMENTS OF I–DRAWINGS.

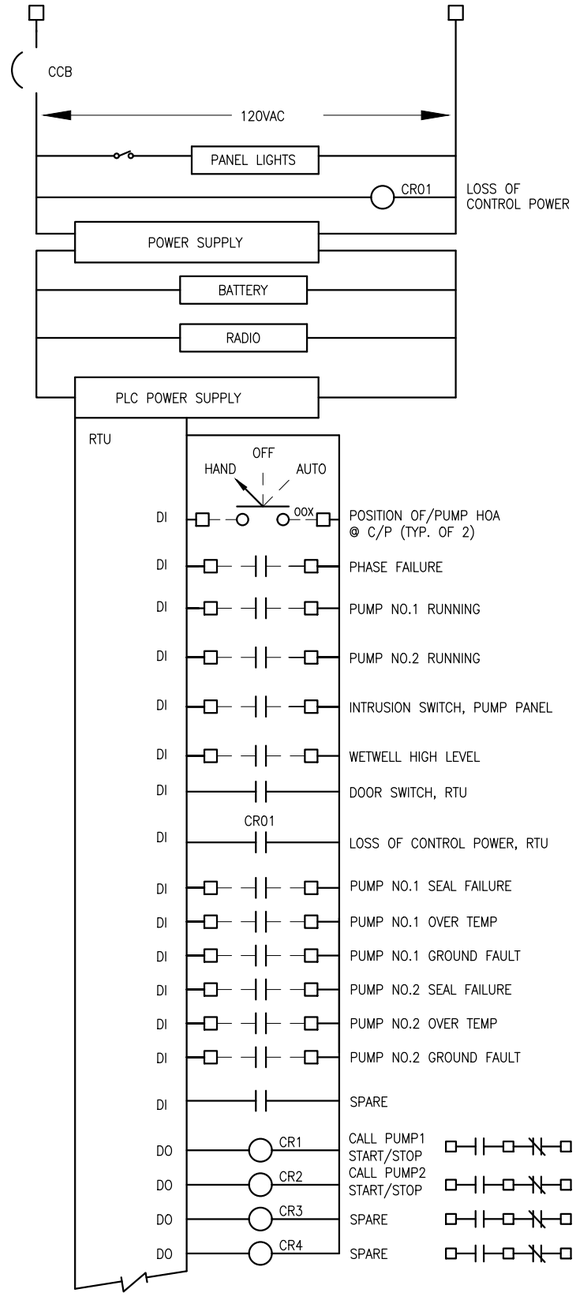



**ECKLER ENGINEERING, INC.**
4700 RIVERSIDE DRIVE, SUITE 110 - CORAL SPRINGS, FL 33067
(954) 510-4700 - FAX (954) 755-2741
CA No. 7803


| | |
|---|---|
| DSGN: | D.K.HAMMANN |
| DR: | M.SIQUEIRA |
| CHK: | D. K. HAMMANN |
| APVD: | D. K. HAMMANN |

VERIFY SCALE
1"
BAR IS ONE INCH ON ORIGINAL DRAWING. ADJUST SCALES AS NECESSARY.

| No. | DATE | REVISIONS | BY | APVD |
|---|---|---|---|---|


C & W engineering
ELECTRICAL CONSULTANTS
2775 VISTA PARKWAY, SUITE G–6, WPB, FL. 33411
(561) 642–5333 FAX (561) 966–2293
EMAIL: CWEng@CWEng.US
LICENCE NO. CA0006245
CONSULTANT

----
MICHAEL A. GUIDA, P.E.
FL #60755


**VILLAGE OF PALM SPRINGS**

SCADA SYSTEM UPGRADE MAIN WATER TREATMENT PLANT (MAIN WTP)
2021B-003

MAIN LIFT STATION REMOTE TELEMETRY UNIT

| | |
|---|---|
| DWG NO. | 61 |
| OF | 70 |
| SHEET | E-26 |
| PROJ. NO. | 400-077.01 |
| DATE | AUGUST 26, 2020 |


File name: C:\Civil 3D Projects\400-077.01 - Scada System Upgrades Main and R. L. Pratt WTP\01_Working (Main)\400-077.01_E-25-MULTI.dwg; Plotted @: 12/23/2020 1:30:45 PM; Scale multiplier: 0.5; Printed by: Matheus Siqueira; Milestone: BID DOCUMENTS


BID DOCUMENTS

## NOTES

1) ENCLOSURE: NEMA 3R, 316 SS, PIANO HINGE, 3PT PADLOCKABLE HANDLE WITH COOLING FAN & FILTERS, U.L. 508, FURNISH 316 SS SUNSHIELDS AND STANDOFFS ON REAR, SIDE(S) AND TOP.

2) CONTROL CABINET ENCLOSURE AND ACCESSORIES SHALL BE AS SPECIFIED IN SECTION 13700 – PROCESS INSTRUMENTATION AND CONTROLS.

3) 18" DEEP; DIMENSIONS SHOWN ARE MIN.

4) PROVIDE THERMOSTAT CONTROLLED COOLING FAN.

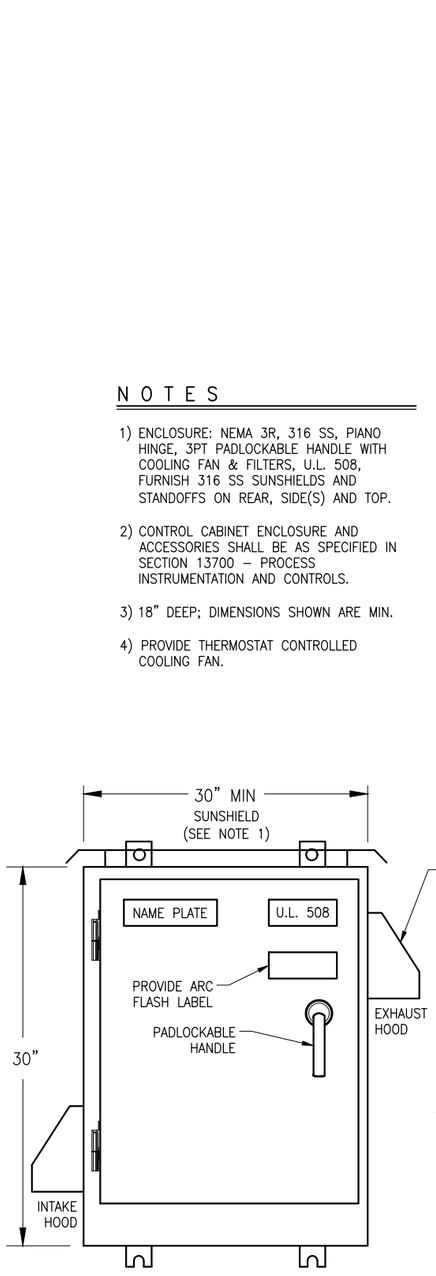


FRONT VIEW

N.T.S.

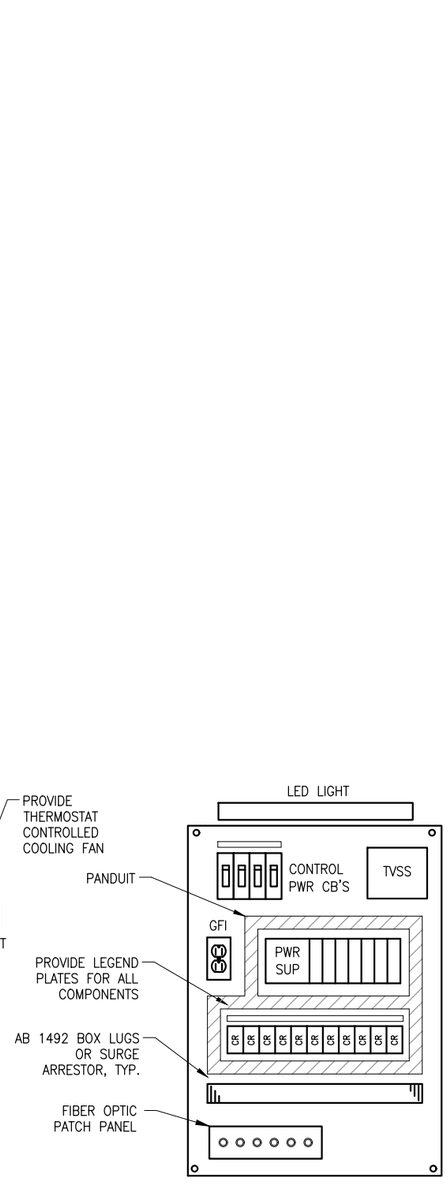


SUBPLATE LAYOUT

N.T.S.

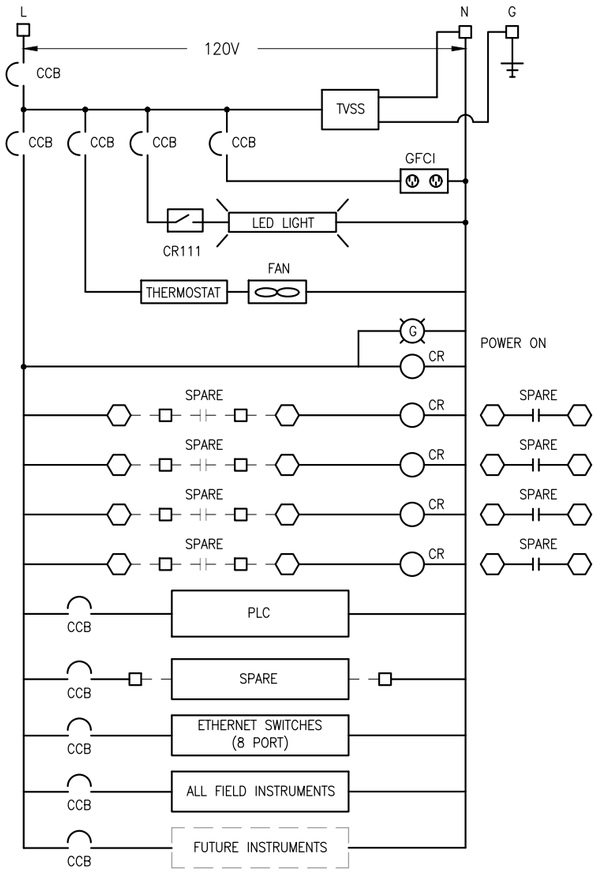


SCHEMATIC


**ECKLER ENGINEERING, INC.**
4700 RIVERSIDE DRIVE, SUITE 110 - CORAL SPRINGS, FL 33067
(954) 510-4700 - FAX (954) 755-2741
CA No. 7803


| | |
|---|---|
| DSGN: | D.K.HAMMANN |
| DR: | M.SIQUEIRA |
| CHK: | D. K. HAMMANN |
| APVD: | D. K. HAMMANN |

VERIFY SCALE
1"
BAR IS ONE INCH ON ORIGINAL DRAWING. ADJUST SCALES AS NECESSARY.

| No. | DATE | REVISIONS | BY | APVD |
|---|---|---|---|---|


C & W engineering
ELECTRICAL CONSULTANTS
2775 VISTA PARKWAY, SUITE G-6, WPB, FL. 33411
(561) 642-5333 FAX (561) 966-2293
EMAIL: CWEng@CWEng.US
LICENCE NO. CA0006245
CONSULTANT

----
MICHAEL A. GUIDA, P.E.
FL #60755


**VILLAGE OF PALM SPRINGS**

SCADA SYSTEM UPGRADE MAIN WATER TREATMENT PLANT (MAIN WTP)
2021B-003

REMOTE IO PANEL - WASHWATER RECOVERY (SHEET 1)

| | |
|---|---|
| DWG NO. | 62 |
| OF | 70 |
| SHEET | E-27 |
| PROJ. NO. | 400-077.01 |
| DATE | AUGUST 26, 2020 |


File name: C:\Civil 3D Projects\400-077.01 - Scada System Upgrades Main and R. L. Pratt WTP\01_Working (Main)\400-077.01_E-25-MULTI.dwg; Plotted @: 12/23/2020 1:30:47 PM; Scale multiplier: 0.5; Printed by: Matheus Siqueira; Milestone: BID DOCUMENTS


BID DOCUMENTS

PROVIDE ALL I/O PER I-DRAWINGS
TO BE CONFIRMED BY CONTRACTOR
DURING SHOP DRAWING PHASE

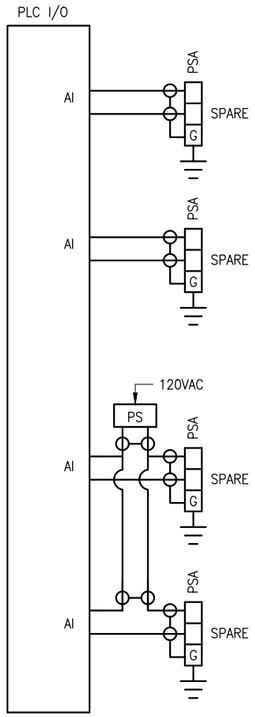


AI LOOP DIAGRAM

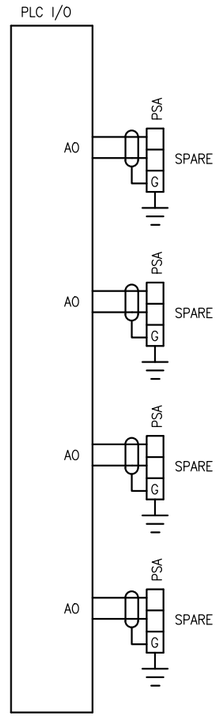


AO LOOP DIAGRAM

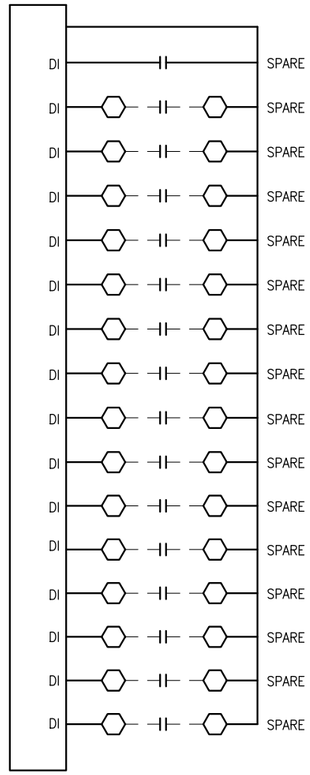


DI DIAGRAMS

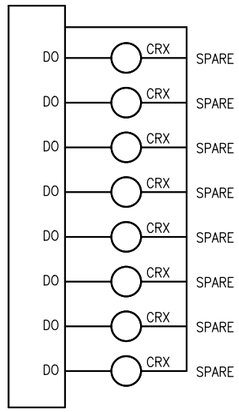


DO DIAGRAMS

**ECKLER ENGINEERING, INC.**
4700 RIVERSIDE DRIVE, SUITE 110 - CORAL SPRINGS, FL 33067
(954) 510-4700 - FAX (954) 755-2741
CA No. 7803

DSGN: D.K.HAMMANN
DR: M.SIQUEIRA
CHK: D. K. HAMMANN
APVD: D. K. HAMMANN

VERIFY SCALE
1"
BAR IS ONE INCH ON ORIGINAL DRAWING. ADJUST SCALES AS NECESSARY.

| No. | DATE | REVISIONS | BY | APVD |
|---|---|---|---|---|

C & W engineering
ELECTRICAL CONSULTANTS
2775 VISTA PARKWAY, SUITE G-6, WPB, FL. 33411
(561) 642-5333 FAX (561) 966-2293
EMAIL: CWEng@CWEng.US
LICENCE NO. CA0006245
CONSULTANT

STATE OF FLORIDA
MICHAEL A. GUIDA
LICENSE NO. 60755
---
MICHAEL A. GUIDA, P.E.
FL #60755

**VILLAGE OF PALM SPRINGS**
SCADA SYSTEM UPGRADE MAIN WATER TREATMENT PLANT (MAIN WTP)
2021B-003

REMOTE IO PANEL - WASHWATER RECOVERY (SHEET 2)

DWG NO. 63 | SHEET E-28
OF 70 | PROJ. NO. 400-077.01
DATE AUGUST 26, 2020

File name: C:\Civil 3D Projects\400-077.01 - Scada System Upgrades Main and R. L. Pratt WTP\01_Working (Main)\400-077.01_E-25-MULTI.dwg; Plotted @: 12/23/2020 1:30:48 PM; Scale multiplier: 0.5; Printed by: Matheus Siqueira; Milestone: BID DOCUMENTS

BID DOCUMENTS

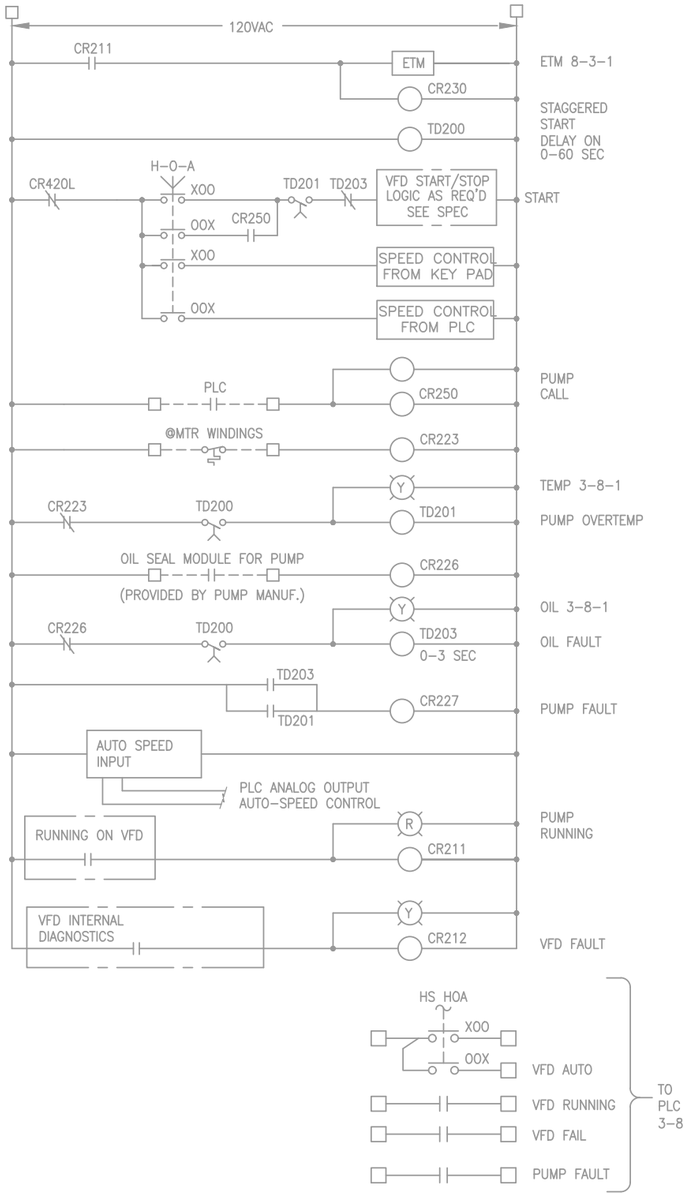


## TRANSFER PUMP SCHEMATIC

TYP FOR P-3-8-1, P-3-8-2, P-3-8-3

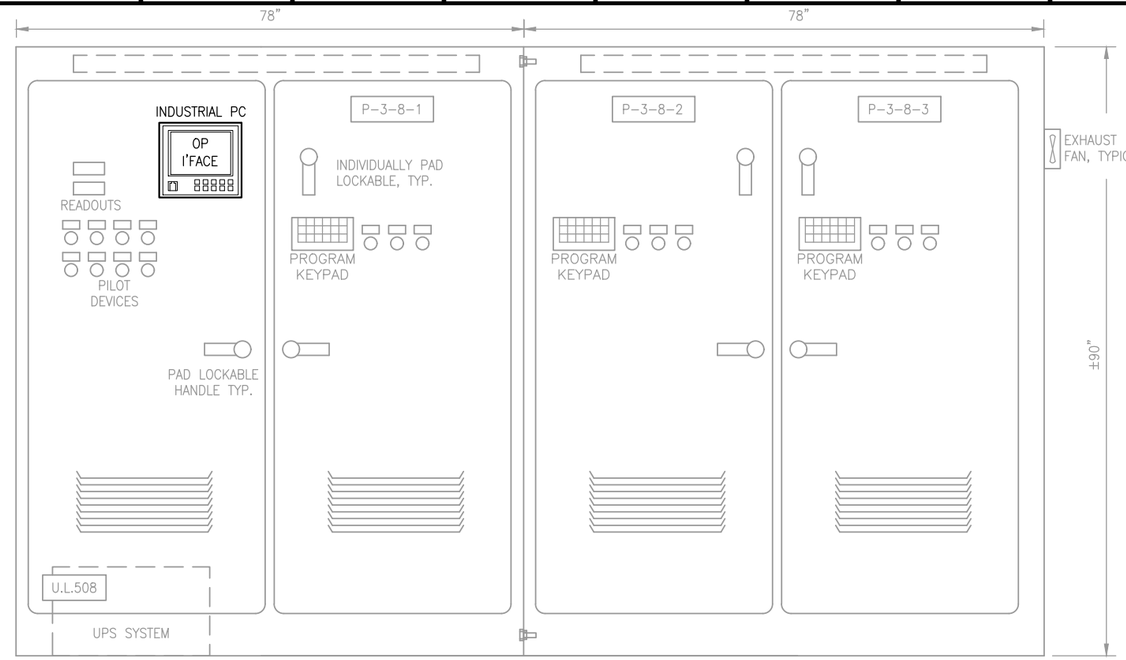


ENCLOSURE: NEMA 12, 3PT. PAD LOCKABLE HANDLE, REMOVABLE LIFTING EYES, REMOVABLE CENTER POST ENCLOSURE SHALL BE FIELD ASSEMBLED FROM TWO SEPARATE AND ADJOINING SECTIONS. PROVIDE SIDE CUT-OUTS FOR ADJOINING SECTIONS.

## FP-3-8 CONTROL PANEL - FRONT VIEW

NTS

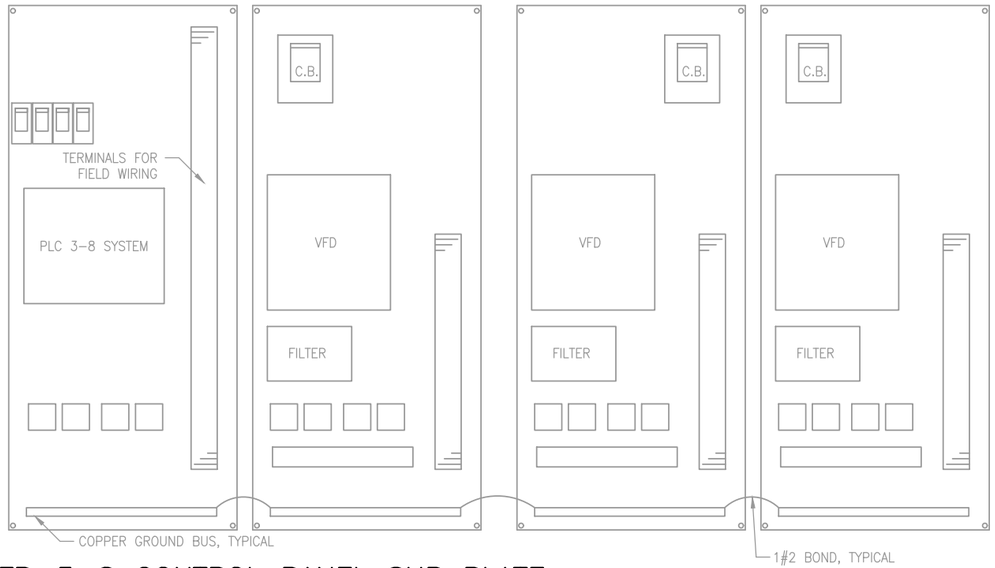


## FP-3-8 CONTROL PANEL SUB PLATE

NTS

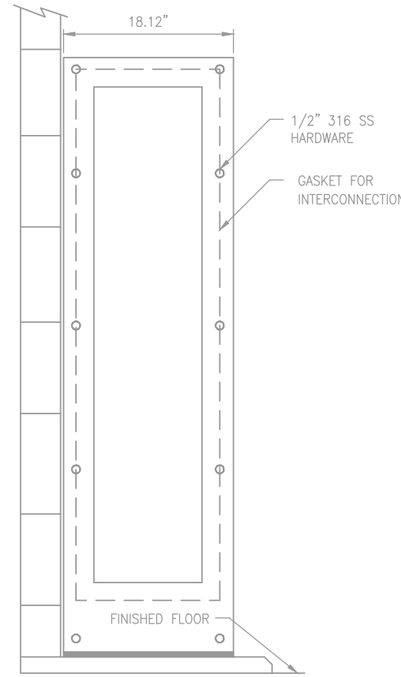


## FP-3-8 CP - SIDE VIEW

NTS,

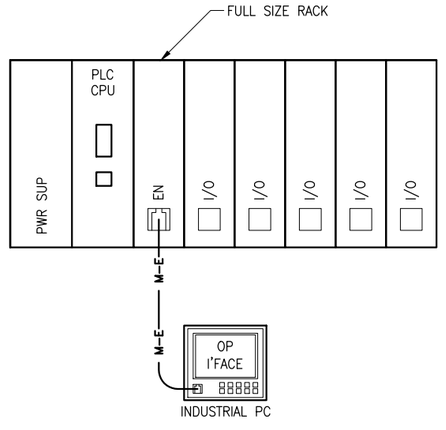


## REPLACEMENT PLC-3-8 DIAGRAM


**ECKLER ENGINEERING, INC.**
4700 RIVERSIDE DRIVE, SUITE 110 - CORAL SPRINGS, FL 33067
(954) 510-4700 - FAX (954) 755-2741
CA No. 7803


| | |
|---|---|
| DSGN: | D.K.HAMMANN |
| DR: | M.SIQUEIRA |
| CHK: | D. K. HAMMANN |
| APVD: | D. K. HAMMANN |

VERIFY SCALE — 1" — BAR IS ONE INCH ON ORIGINAL DRAWING. ADJUST SCALES AS NECESSARY.

| No. | DATE | REVISIONS | BY | APVD |
|---|---|---|---|---|


C & W engineering
ELECTRICAL CONSULTANTS
2775 VISTA PARKWAY, SUITE G-6, WPB, FL. 33411
(561) 642-5333 FAX (561) 966-2293
EMAIL: CWEng@CWEng.US
LICENCE NO. CA0006245
CONSULTANT

----
MICHAEL A. GUIDA, P.E.
FL #60755


**VILLAGE OF PALM SPRINGS**

SCADA SYSTEM UPGRADE MAIN WATER TREATMENT PLANT (MAIN WTP)
2021B-003

MIEX TRANSFER CONTROL PANEL MODIFICATIONS (SHEET 1)

| | |
|---|---|
| DWG NO. | 64 |
| OF | 70 |
| SHEET | E-29 |
| PROJ. NO. | 400-077.01 |
| DATE | AUGUST 26, 2020 |


File name: C:\Civil 3D Projects\400-077.01 - Scada System Upgrades Main and R. L. Pratt WTP\01_Working (Main)\400-077.01_E-25-MULTI.dwg; Plotted @: 12/23/2020 1:30:50 PM; Scale multiplier: 0.5; Printed by: Matheus Siqueira; Milestone: BID DOCUMENTS


BID DOCUMENTS

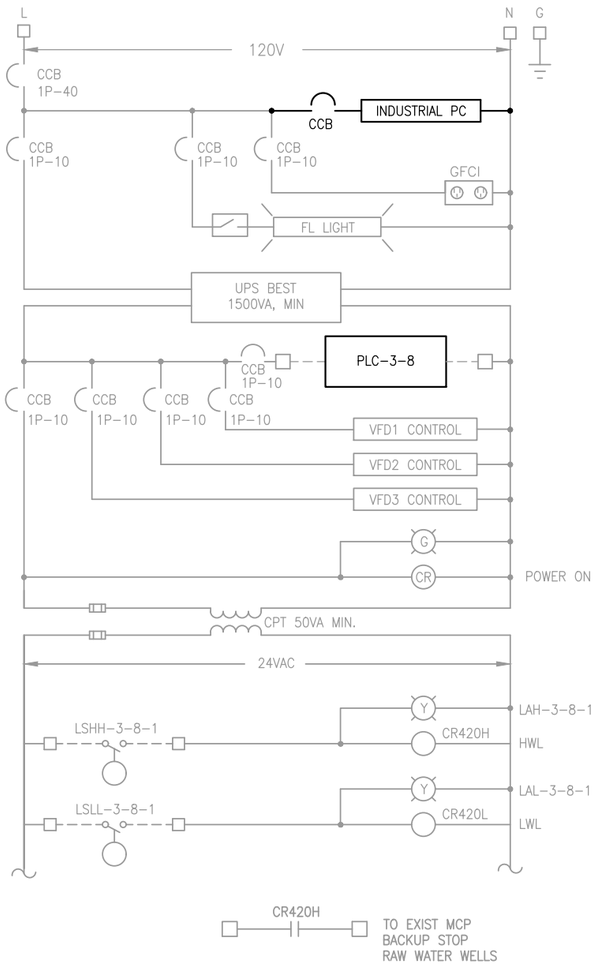


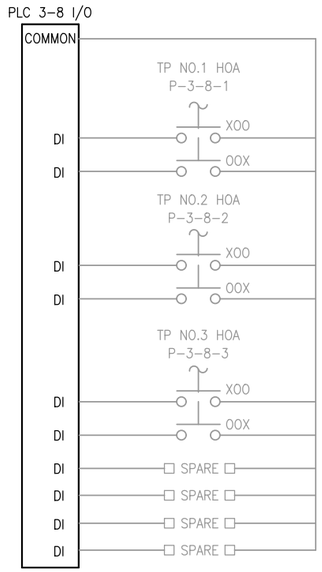


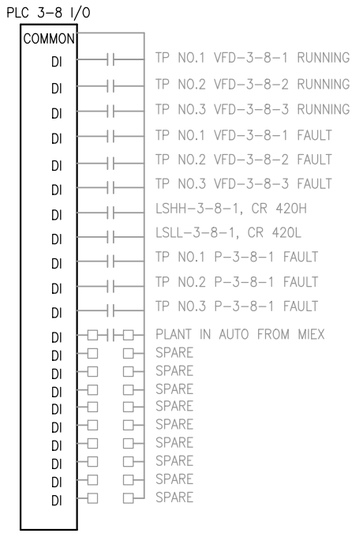


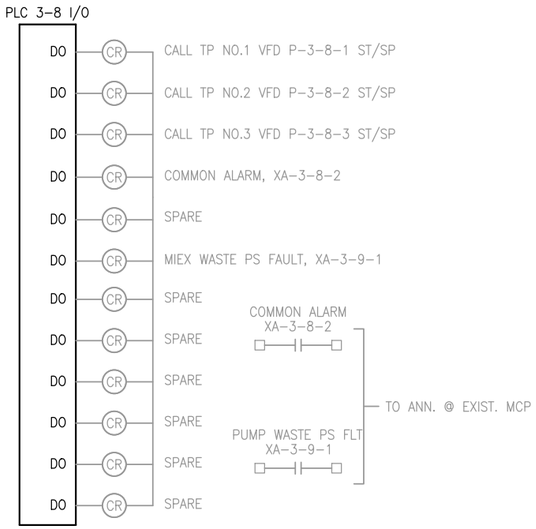


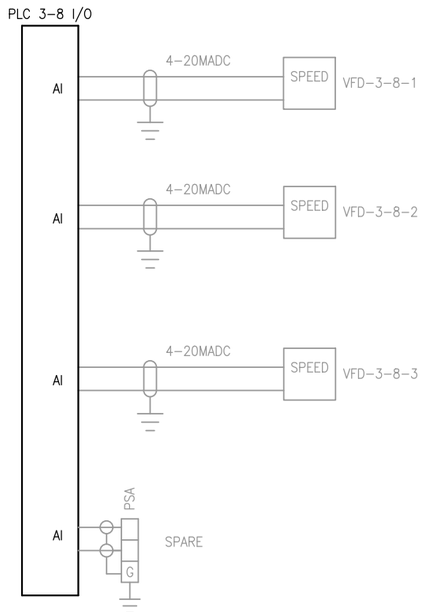


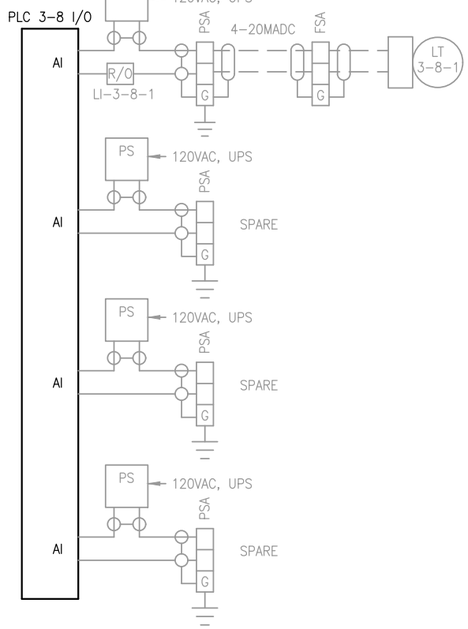


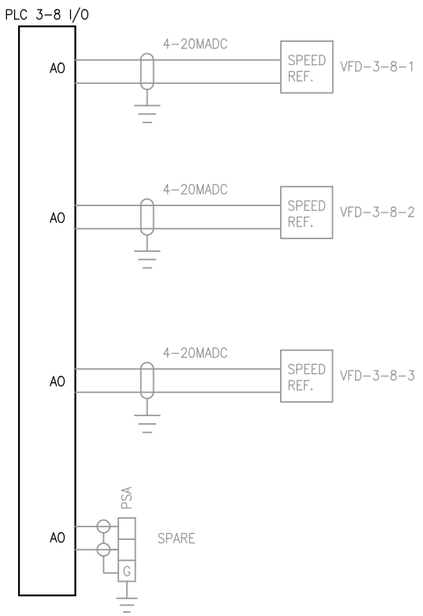


**ECKLER ENGINEERING, INC.**
4700 RIVERSIDE DRIVE, SUITE 110 - CORAL SPRINGS, FL 33067
(954) 510-4700 - FAX (954) 755-2741
CA No. 7803

DSGN: D.K.HAMMANN
DR: M.SIQUEIRA
CHK: D. K. HAMMANN
APVD: D. K. HAMMANN

VERIFY SCALE
1"
BAR IS ONE INCH ON ORIGINAL DRAWING. ADJUST SCALES AS NECESSARY.

| No. | DATE | REVISIONS | BY | APVD |
|---|---|---|---|---|

C & W engineering
ELECTRICAL CONSULTANTS
2775 VISTA PARKWAY, SUITE G-6, WPB, FL. 33411
(561) 642-5333 FAX (561) 966-2293
EMAIL: CWEng@CWEng.US
LICENCE NO. CA0006245
CONSULTANT

SUB PROJ. NO. 98

----
MICHAEL A. GUIDA, P.E.
FL #60755

**VILLAGE OF PALM SPRINGS**
SCADA SYSTEM UPGRADE MAIN WATER TREATMENT PLANT (MAIN WTP)
2021B-003

MIEX TRANSFER CONTROL PANEL MODIFICATIONS (SHEET 2)

DWG NO. 65
SHEET E-30
OF 70
PROJ. NO. 400-077.01
DATE AUGUST 26, 2020

File name: C:\Civil 3D Projects\400-077.01 - Scada System Upgrades Main and R. L. Pratt WTP\01_Working (Main)\400-077.01_E-29-MULTI.dwg; Plotted @: 12/23/2020 1:30:55 PM; Scale multiplier: 0.5; Printed by: Matheus Siqueira; Milestone: BID DOCUMENTS

BID DOCUMENTS

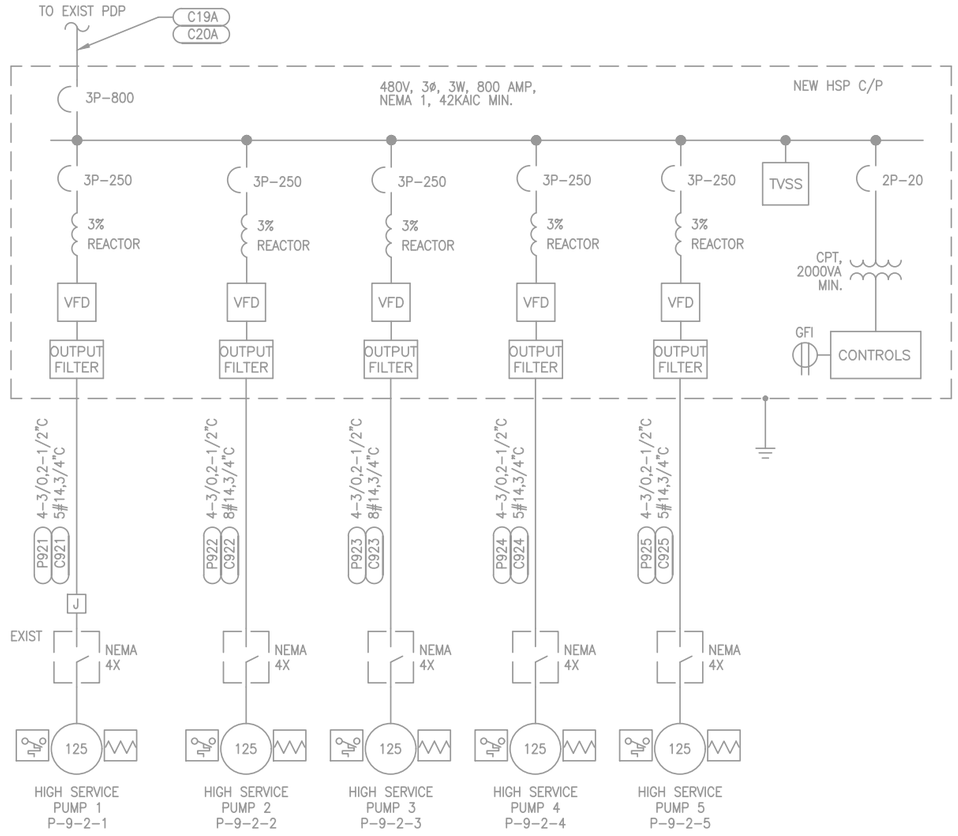


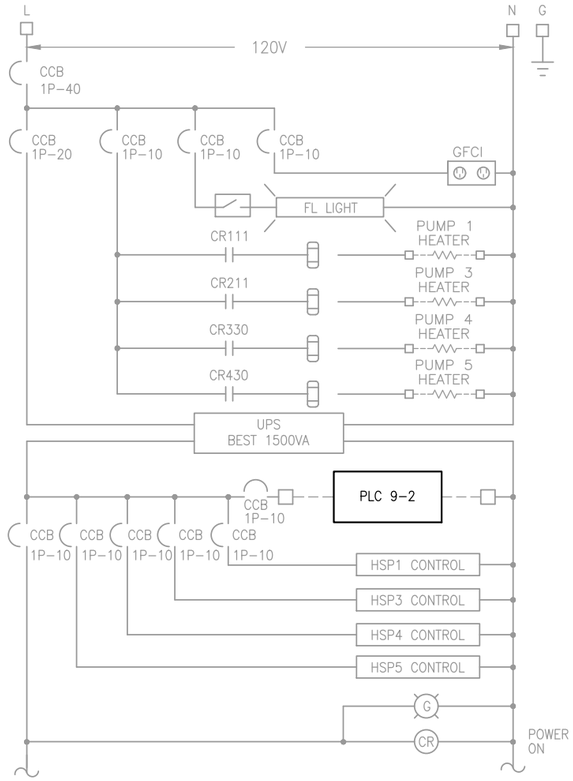


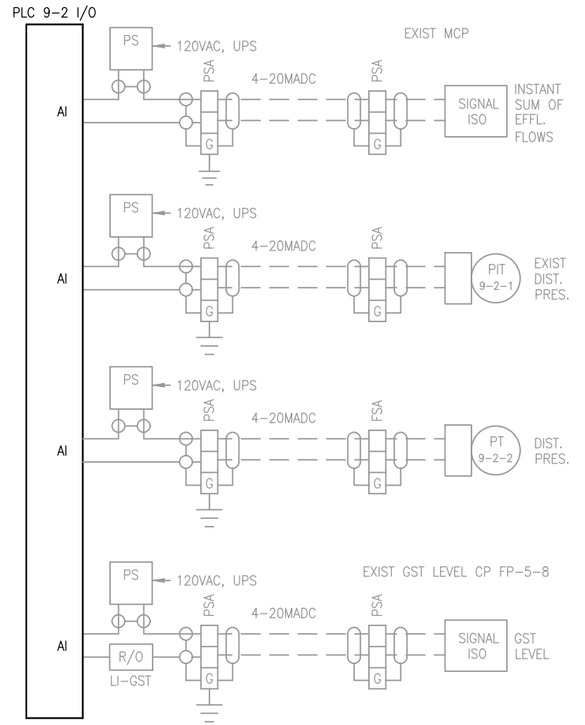


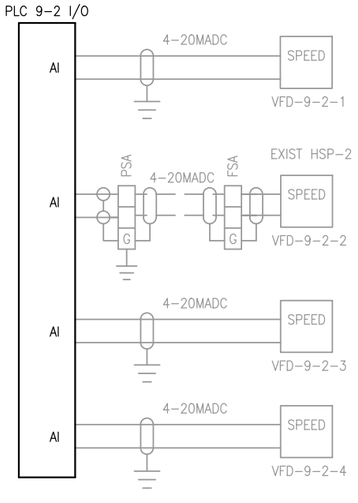


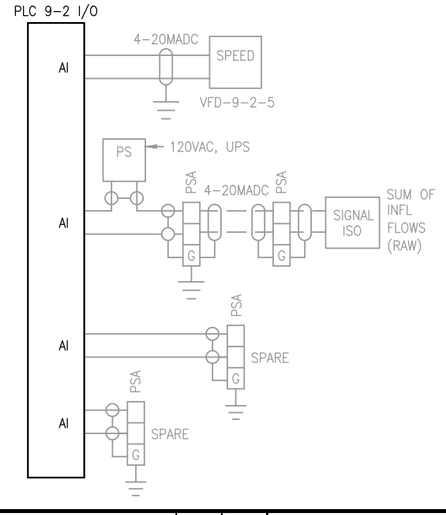


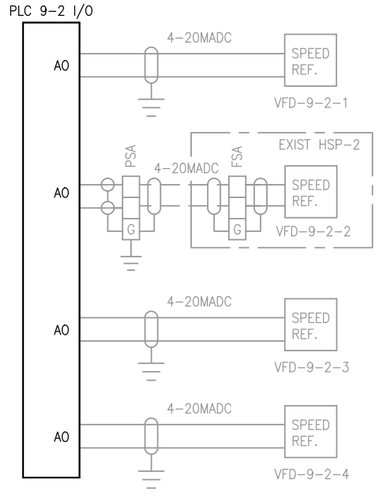


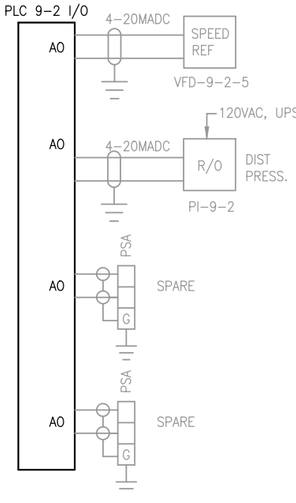


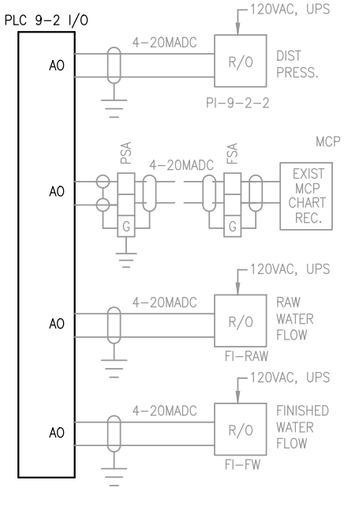



**ECKLER ENGINEERING, INC.**
4700 RIVERSIDE DRIVE, SUITE 110 - CORAL SPRINGS, FL 33067
(954) 510-4700 - FAX (954) 755-2741
CA No. 7803


| | |
|---|---|
| DSGN: | D.K.HAMMANN |
| DR: | M.SIQUEIRA |
| CHK: | D. K. HAMMANN |
| APVD: | D. K. HAMMANN |

VERIFY SCALE
1"
BAR IS ONE INCH ON ORIGINAL DRAWING. ADJUST SCALES AS NECESSARY.

| No. | DATE | REVISIONS | BY | APVD |
|---|---|---|---|---|


C & W engineering
ELECTRICAL CONSULTANTS
2775 VISTA PARKWAY, SUITE G-6, WPB, FL. 33411
(561) 642-5333 FAX (561) 966-2293
EMAIL: CWEng@CWEng.US
LICENCE NO. CA0006245
CONSULTANT

----
MICHAEL A. GUIDA, P.E.
FL #60755


**VILLAGE OF PALM SPRINGS**

SCADA SYSTEM UPGRADE MAIN WATER TREATMENT PLANT (MAIN WTP)
2021B-003

# HIGH SERVICE PUMP CONTROL PANEL MODIFICATION (SHEET 1)

| | |
|---|---|
| DWG NO. | 66 |
| OF | 70 |
| SHEET | E-31 |
| PROJ. NO. | 400-077.01 |
| DATE | AUGUST 26, 2020 |

BID DOCUMENTS

File name: C:\Civil 3D Projects\400-077.01 - Scada System Upgrades Main and R. L. Pratt WTP\01_Working (Main)\400-077.01_E-29-MULTI.dwg; Plotted @: 12/23/2020 1:30:56 PM; Scale multiplier: 0.5; Printed by: Matheus Siqueira; Milestone: BID DOCUMENTS

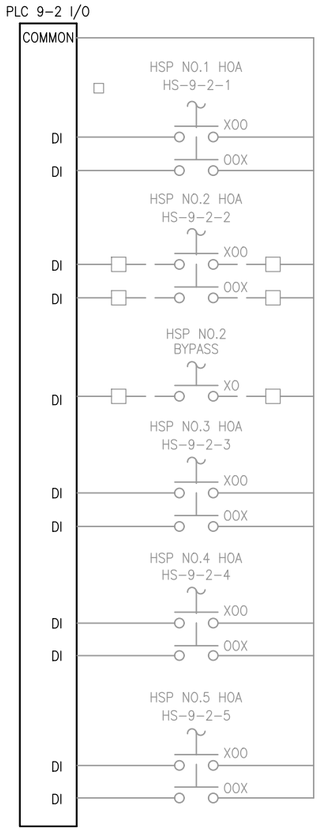


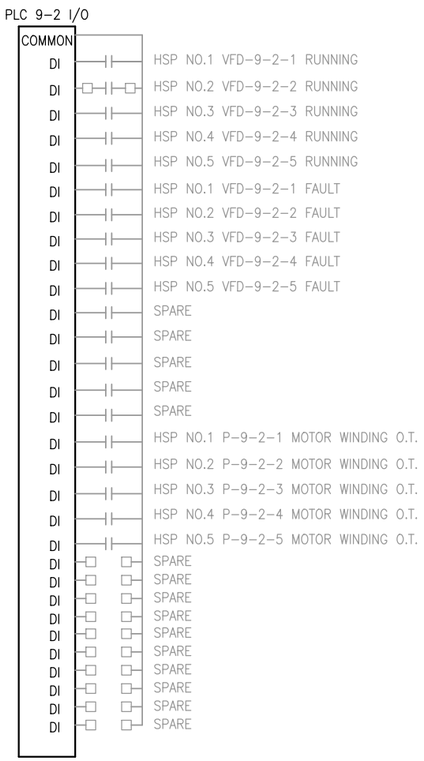


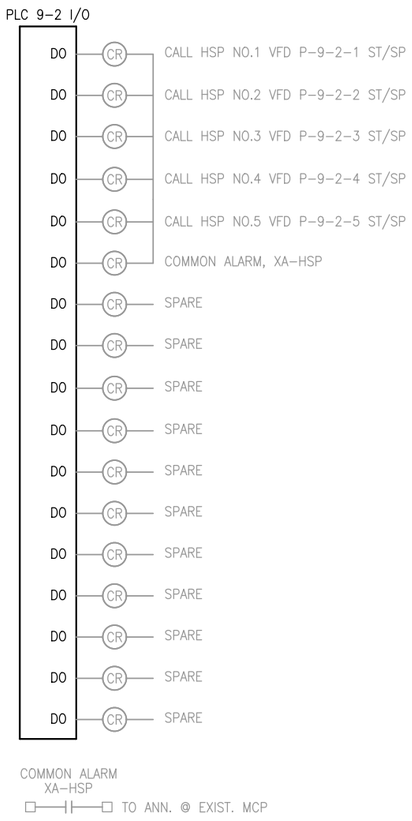


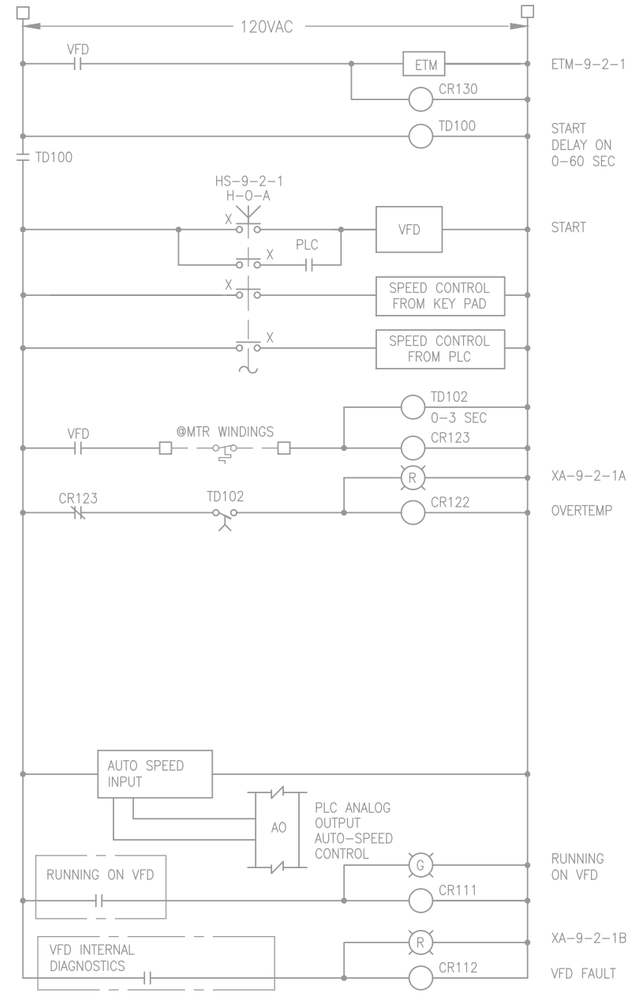


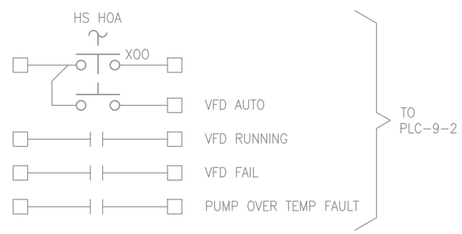


# HIGH SERVICE PUMP 9-2-1 VFD SCHEMATIC

TYP. FOR HSP-3,4,5


**ECKLER ENGINEERING, INC.**
4700 RIVERSIDE DRIVE, SUITE 110 - CORAL SPRINGS, FL 33067
(954) 510-4700 - FAX (954) 755-2741
CA No. 7803


| | |
|---|---|
| DSGN: | D.K.HAMMANN |
| DR: | M.SIQUEIRA |
| CHK: | D. K. HAMMANN |
| APVD: | D. K. HAMMANN |

VERIFY SCALE
1"
BAR IS ONE INCH ON ORIGINAL DRAWING. ADJUST SCALES AS NECESSARY.

| No. | DATE | REVISIONS | BY | APVD |
|---|---|---|---|---|


C & W engineering
ELECTRICAL CONSULTANTS
2775 VISTA PARKWAY, SUITE G-6, WPB, FL. 33411
(561) 642-5333 FAX (561) 966-2293
EMAIL: CWEng@CWEng.US
LICENCE NO. CA0006245
CONSULTANT

----
MICHAEL A. GUIDA, P.E.
FL #60755


**VILLAGE OF PALM SPRINGS**

SCADA SYSTEM UPGRADE MAIN WATER TREATMENT PLANT (MAIN WTP)
2021B-003

HIGH SERVICE PUMP CONTROL PANEL MODIFICATION (SHEET 2)

| | |
|---|---|
| DWG NO. | 67 |
| OF | 70 |
| DATE | AUGUST 26, 2020 |
| SHEET | E-32 |
| PROJ. NO. | 400-077.01 |


File name: C:\Civil 3D Projects\400-077.01 - Scada System Upgrades Main and R. L. Pratt WTP\01_Working (Main)\400-077.01_E-29-MULTI.dwg; Plotted @: 12/23/2020 1:30:58 PM; Scale multiplier: 0.5; Printed by: Matheus Siqueira; Milestone: BID DOCUMENTS


BID DOCUMENTS

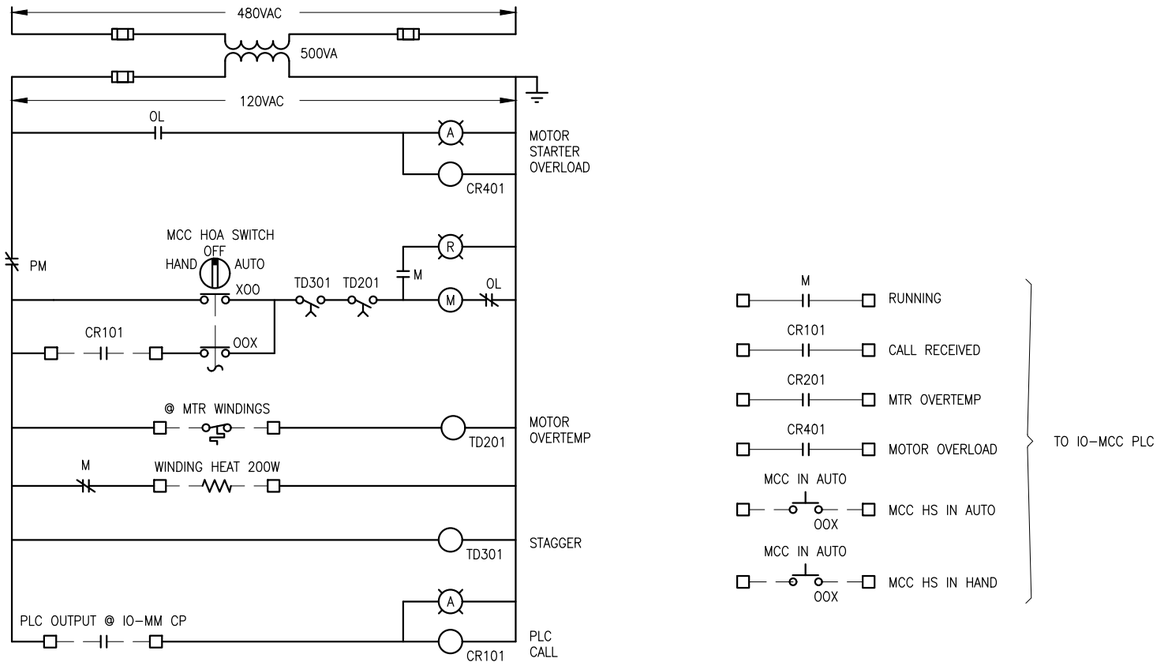





## NOTES

1) CONTRACTOR SHALL PROVIDE 13 #14 WIRES FROM THE PLC AT THE PROPOSED MCC-IO CONTROL PANEL TO EACH STARTER BUCKET WHERE THE STARTER IS BEING USED BY A MOTOR OR PUMP LOAD (COORDINATE WITH OWNER AND CONFIRM EXISTING STARTERS BEING USED). LAND THESE WIRES TO THE STARTER BUCKET RUNNING, MOTOR OVERTEMP, MOTOR OVERLOAD, START COMMAND, MCC HOA IN AUTO, MCC HOA IN HAND. IF ONE OF THESE POINTS IS NOT AVAILABLE AT THAT BUCKET THEN LEAVE THE CORRESPONDING WIRES AS SPARES (20" TO 24" SPOOL SO IN THE FUTURE IT MAY BE CONNECTED.

2) AT THE STARTER THAT ARE SPARE AND NOT BEING USED INSTALL THE WIRES AS SPARES (13#14 WIRES) AND LEAVE A SPOOL OF APPROX. 24" FOR FUTURE TERMINATION AT THAT PARTICULAR BUCKET.

3) THE PROPOSED INSTALLATION AT THE EXISTING MCC IS FOR THE #14 CONTROL WIRES FROM THE MULTI-CONDUCTOR CABLES TO BE INSTALLED SO THERE IS ENOUGH SPOOL LEFT THAT THE FURTHEST VERTICAL STARTER BUCKET CAN BE EASILY REACHED AND THE FUTURE DEDICATED 13#14 WIRES CAN BE TERMINATED INSIDE THAT PARTICULAR BUCKET. SO AS MULTI CONDUCTOR CABLES ARE INSTALLED INSIDE THE MCC THEY NEED TO BE LOCATED AS TO MEET THIS CRITERIA OF LANDING THE 13#14s AT THE STARTER BUCKETS BEING USED, AND LEAVE ENOUGH SPOOL FOR THE EXISTING STARTER BUCKETS THAT ARE SPARES.

4) ACTUAL SCHEMATIC COMPONENTS MAY BE SLIGHTLY DIFFERENT, ADJUSTMENT TO ACTUAL FIELD CONDITIONS IS CONSIDERED WORK WITHIN CONTRACT.

# MCC SCHEMATIC MODIFICATION (TYPICAL)

SCALE: N.T.S.

1
E-04


**ECKLER ENGINEERING, INC.**
4700 RIVERSIDE DRIVE, SUITE 110 - CORAL SPRINGS, FL 33067
(954) 510-4700 - FAX (954) 755-2741
CA No. 7803


| | |
|---|---|
| DSGN: | D.K.HAMMANN |
| DR: | M.SIQUEIRA |
| CHK: | D. K. HAMMANN |
| APVD: | D. K. HAMMANN |

VERIFY SCALE
1"
BAR IS ONE INCH ON ORIGINAL DRAWING. ADJUST SCALES AS NECESSARY.

| No. | DATE | REVISIONS | BY | APVD |
|---|---|---|---|---|


C & W engineering
ELECTRICAL CONSULTANTS
2775 VISTA PARKWAY, SUITE G-6, WPB, FL. 33411
(561) 642-5333 FAX (561) 966-2293
EMAIL: CWEng@CWEng.US
LICENCE NO. CA0006245
CONSULTANT

----
MICHAEL A. GUIDA, P.E.
FL #60755


**VILLAGE OF PALM SPRINGS**

SCADA SYSTEM UPGRADE MAIN WATER TREATMENT PLANT (MAIN WTP)
2021B-003

SPECIFIC DETAILS - ELECTRICAL

| | |
|---|---|
| DWG NO. | 68 |
| SHEET | E-33 |
| OF | 70 |
| PROJ. NO. | 400-077.01 |
| DATE | AUGUST 26, 2020 |

BID DOCUMENTS


File name: C:\Civil 3D Projects\400-077.01 - Scada System Upgrades Main and R. L. Pratt WTP\01_Working (Main)\400-077.01_E-33-MULTI.dwg; Plotted @: 12/23/2020 1:31:04 PM; Scale multiplier: 0.5; Printed by: Matheus Siqueira; Milestone: BID DOCUMENTS

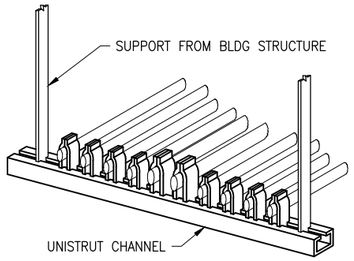


NOTES:
1) THIS DETAIL IS TYPICAL FOR BOTH VERTICAL AND HORIZONTAL MOUNTING.
2) CHANNEL AND ALL SUPPORT DEVICES TO BE FIELD COATED TO MATCH.
3) CHANNELS TO BE SPACED 5' MAXIMUM.
4) ALL MATERIALS SHALL BE 316 SST UNLESS OTHERWISE SPECIFIED.

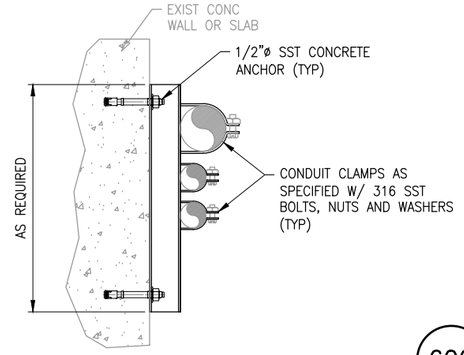


600

## INSTALLATION DETAIL

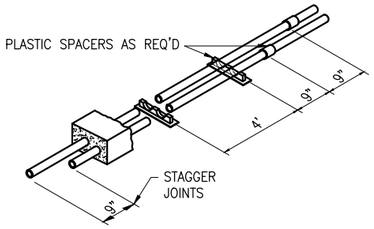


NOTES:
1) QUANTITY AND ARRANGEMENT VARY PER PLAN.
2) POWER AND CONTROL RACEWAYS MAY BE GROUPED TOGETHER.
3) INSTRUMENTATION RACEWAYS WITH 4–20MADC SIGNALS SHALL BE SEPARATED FROM POWER AND CONTROL RACEWAY BY 24" MIN.
4) PROVIDE MINIMUM 3" OF COVERAGE AROUND ALL ENCASED CONDUITS.
5) ENCASEMENT SHALL BE 3000 PSI REGULAR CONCRETE MIX OR FLOWABLE FILL PER SPECIFICATIONS SECTION 03300 – CONCRETE.
6) ADD RED DYE TO COLOR CODE CONCRETE / FLOWABLE FILL TO INDICATE ELECTRICAL DUCT BANK.
7) MINIMUM COVER SHALL BE 24"

601

## CONCRETE ENCASEMENT

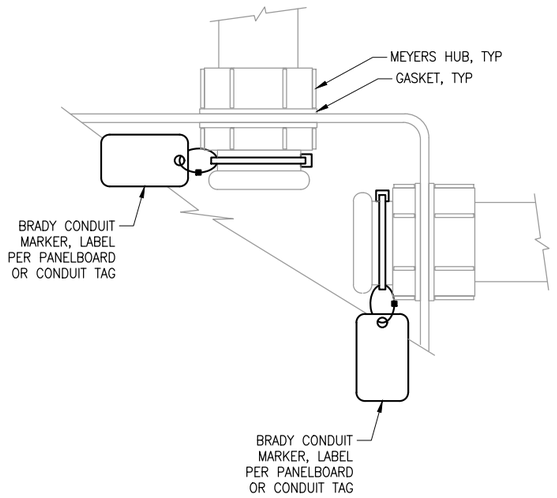


602

## CONDUIT DETAIL, OUTDOOR OR DAMP LOCATION

NOTES:
1. PROVIDE FOR ALL ELECTRICAL ENCLOSURES, SERVED BY METAL CONDUITS

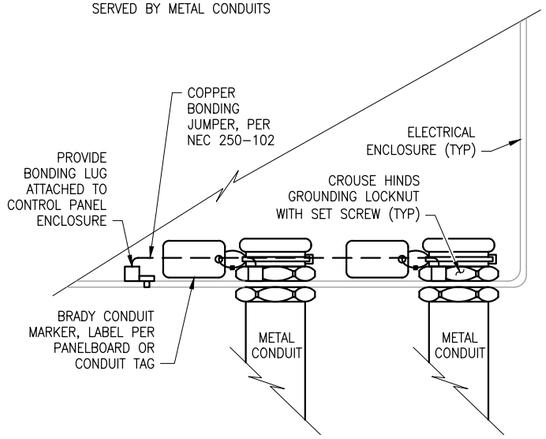


604

## CONDUIT DETAIL, INDOOR

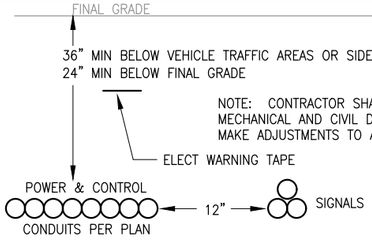


605

## DIRECT BURIED CONDUIT

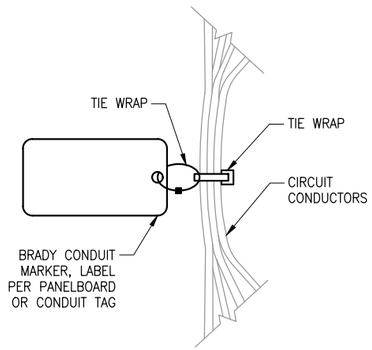


606

## CIRCUIT MARKER DETAIL

NOTES:
1) ENCLOSURES, BOXES AND COVERS ARE REQUIRED TO CONFORM TO ALL TEST PROVISIONS OF THE MOST CURRENT ANSI/SCTE 77 "SPECIFICATIONS FOR UNDERGROUND ENCLOSURE" FOR TIER 22 APPLICATIONS. ALL COVERS ARE REQUIRED TO HAVE THE TIER LEVEL RATING EMBOSSED ON THE SURFACE. IN NO ASSEMBLY CAN THE COVER DESIGN LOAD EXCEED THE DESIGN LOAD OF THE BOX. ALL COMPONENTS IN AN ASSEMBLY (BOX & COVER) ARE MANUFACTURED USING MATCHED SURFACE TOOLING.
2) ENCLOSURE SHALL BE PG OR PC STYLE QUAZITE ENCLOSURES, FOR TIER 22 APPLICATIONS. SIZE AND DEPTH PER INSTALLATION REQUIREMENTS, NOTED ON DRAWINGS.
3) COVERS SHALL BE BOLT DOWN, MARKED PER SERVICE (ELECTRICAL OR INSTRUMENTATION).
4) PROVIDE GRADE EXTENSIONS AS APPLICABLE.
5) ALL CONDUITS IN AND OUT OF PULL BOX SHALL HAVE PULL STRINGS.

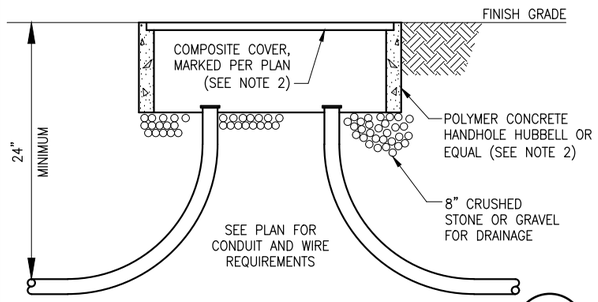


607

## HAND HOLE DETAIL

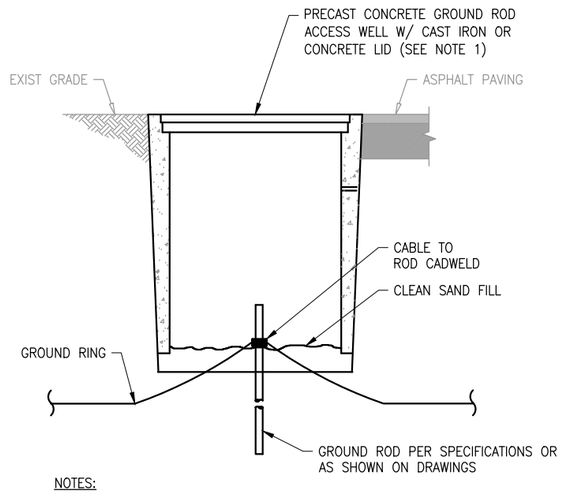


NOTES:
1) MINIMUM DIAMETER IS 8–1/2", BY MINIMUM 11–3/4" DEEP. MANUFACTURED BY OLD CASTLE PRECAST, INC., OR EQUAL.

606

## GROUND ROD W/ ACCESS

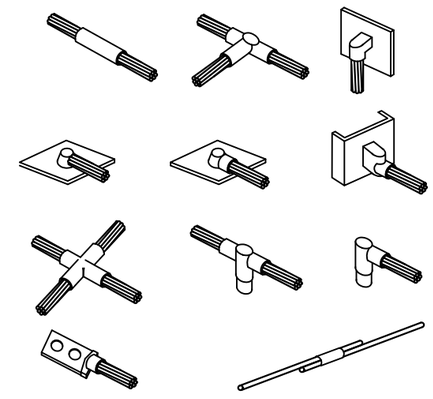

609

## CADWELD DETAILS

**ECKLER ENGINEERING, INC.**
4700 RIVERSIDE DRIVE, SUITE 110 - CORAL SPRINGS, FL 33067
(954) 510-4700 - FAX (954) 755-2741
CA No. 7803

DSGN: D.K.HAMMANN
DR: M.SIQUEIRA
CHK: 4 - Checked by
APVD: 5 - Approved by

VERIFY SCALE
1"
BAR IS ONE INCH ON ORIGINAL DRAWING. ADJUST SCALES AS NECESSARY.

| No. | DATE | REVISIONS | BY | APVD |
|---|---|---|---|---|

C & W engineering
ELECTRICAL CONSULTANTS
2775 VISTA PARKWAY, SUITE G-6, WPB, FL. 33411
(561) 642-5333 FAX (561) 966-2293
EMAIL: CWEng@CWEng.US
LICENCE NO. CA0006245
CONSULTANT

----
MICHAEL A. GUIDA, P.E.
FL #60755

**VILLAGE OF PALM SPRINGS**
SCADA SYSTEM UPGRADE MAIN WATER TREATMENT PLANT (MAIN WTP)
2021B-003

STANDARD DETAILS - ELECTRICAL

DWG NO. 69 | SHEET ED-01
OF 70 | PROJ. NO. 400-077.01
DATE AUGUST 26, 2020

File name: C:\Civil 3D Projects\400-077.01 - Scada System Upgrades Main and R. L. Pratt WTP\01_Working (Main)\400-077.01_ED-00.dwg; Plotted @: 12/23/2020 1:31:10 PM; Scale multiplier: 0.5; Printed by: Matheus Siqueira; Milestone: BID DOCUMENTS

BID DOCUMENTS

N O T E S:

1. FINAL ASSEMBLY DIMENSION SHALL BE COORDINATED WITH MOUNTED EQUIPMENT SHOP DRAWINGS AND SPACING REQUIREMENTS PER CODE.
2. ALL EQUIPMENT SHALL BE GROUNDED PER DRAWINGS AND APPLICABLE CODE REUIREMENTS.
3. SHOP DRAWINGS REQUIRED FOR ELECTRICAL EQUIPMENT RACK LAYOUT.
4. EQUIPMENT DIMENSIONS VARY.
5. PROVIDE VERTICAL & HORIZONTAL MEMBERS AS MAY BE REQUIRED.
6. DETAIL SHOWS ONE FIELD PANEL; EXPAND VERTICAL & HORIZONTAL MEMBERS FOR MULTIPLE PANELS ON RACK.

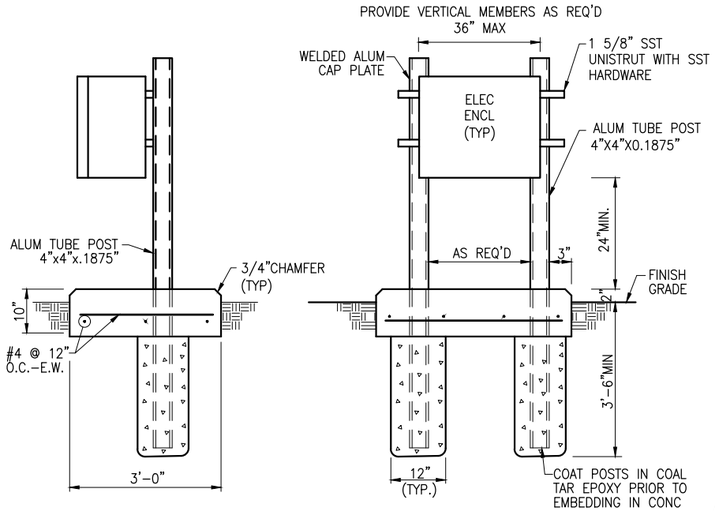


## EQUIPMENT RACK

612

NOTES:

1) PROVIDE SST OR F.R.P. 1-5/8" UNISTRUT WITH SST BOLTS AND NUTS WHERE REQUIRED TO OFFSET INSTRUMENT MOUNT FROM WALL.

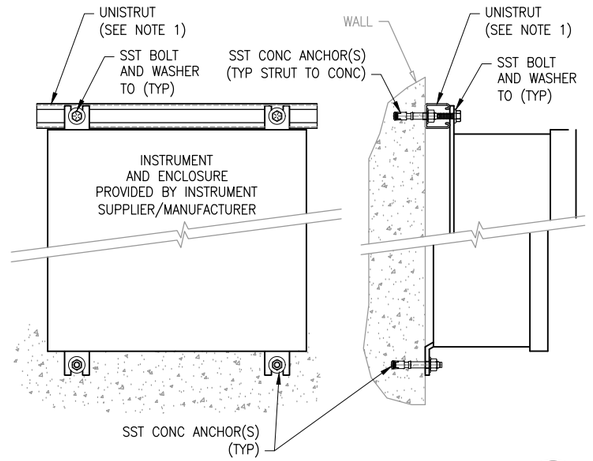


## WALL MOUNTED ENCLOSURE INSTALLATION

507

NOTES:

1) PAD SIZE SHALL BE MIN SHOWN ON DETAIL OR DRAWING, OR AS INDICATED BY THE EQUIPMENT MANUFACTURER AND REVIEWED BY THE ENGINEER.
2) EQUIPMENT BASES SHALL BE INSTALLED LEVEL UNLESS SPECIFIED OTHERWISE.
3) SHIM BASES AND BACK OFF TEMPORARY LEVEL NUTS PRIOR TO PLACING GROUT. SHIMS SHALL NOT BE EXPOSED TO VIEW.
4) ANCHOR BOLT TYPE, SIZE, NUMBER, LOCATION AND THREAD PROJECTION SHALL BE AS PER EQUIPMENT MANUFACTURER'S RECOMMENDATIONS AND REVIEWED BY THE ENGINEER. WHERE APPLICABLE ANCHOR BOLTS SHALL BE HELD IN POSITION WITH A TEMPLATE WHILE PAD IS BEING POURED AND CURED.
5) 3/8" TOOLED EDGE IS ACCEPTABLE SUBSTITUTE WITH OWNER / ENGINEER APPROVAL. DO NOT CHAMFER OR TOOL EDGES OF PADS ADJACENT TO WALLS.

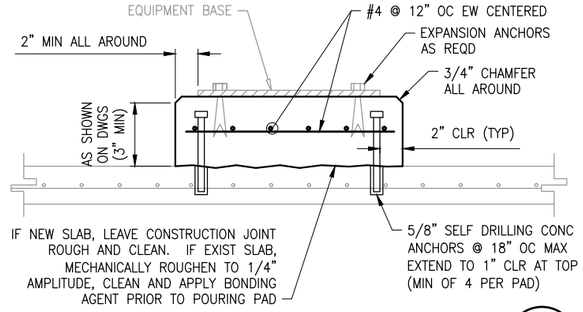


## EQUIPMENT PAD - TYPE C

358

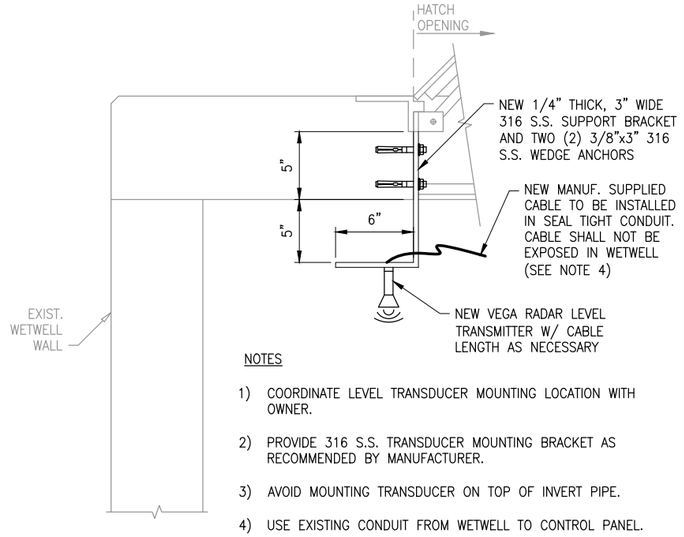


NOTES

1) COORDINATE LEVEL TRANSDUCER MOUNTING LOCATION WITH OWNER.
2) PROVIDE 316 S.S. TRANSDUCER MOUNTING BRACKET AS RECOMMENDED BY MANUFACTURER.
3) AVOID MOUNTING TRANSDUCER ON TOP OF INVERT PIPE.
4) USE EXISTING CONDUIT FROM WETWELL TO CONTROL PANEL.
5) ALL REFERENCES IN THESE DRAWINGS TO LEVEL TRANSDUCER INSTALLATION, SUBMERSIBLE LEVEL TRANSDUCER INSTALLATION OR SIMILAR SHALL NOW REFERENCE DETAIL #608.

## RADAR LEVEL TRANSDUCER INSTALLATION

608

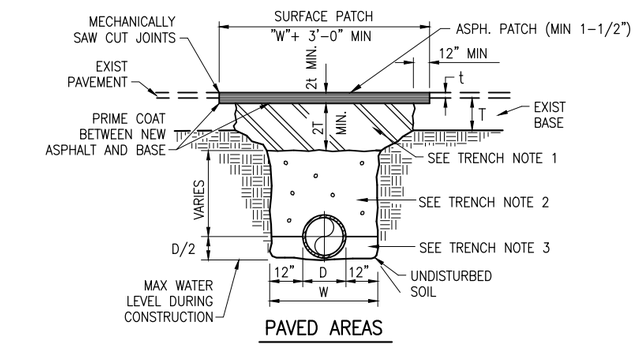


PAVED AREAS

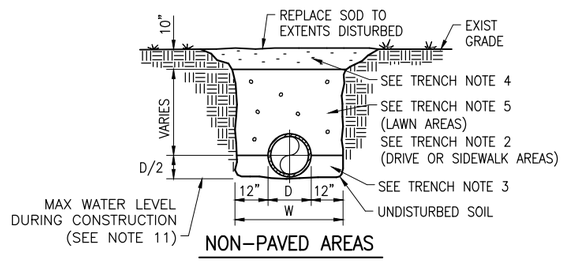


NON-PAVED AREAS

NOTES:

1) PREPARE BASE SECTION, SAW CUT EXISTING PAVEMENT AS APPLICABLE. PRIME COAT, TACK COAT AND PLACE ASPHALT PATCH IMMEDIATELY FOLLOWING PIPE INSTALLATION. BASE MATERIAL SHALL BE TWICE THE THICKNESS OF EXISTING BASE MATERIAL, BUT IN NO CASE BE LESS THAN 12". BASE MATERIAL SHALL BE PLACED IN LIFTS NOT TO EXCEED 8" AND COMPACTED TO 98% OF MAXIMUM DENSITY AS DETERMINED BY AASHTO T-180.
2) FILL PLACED IN 8" LIFTS COMPACTED TO 98% OF MAXIMUM DENSITY AS DETERMINED BY AASHTO T180.
3) FILL COMPACTED TO 98% OF MAXIMUM DENSITY AS DETERMINED BY AASHTO T180.
4) NATURAL TOP SOIL GRADED TO 2" ABOVE EXISTING GRADE WHERE SEEDED & GRADED 1" TO 2" BELOW GRADE WHERE SOD IS REQUIRED.
5) FILL PLACED IN 12" LIFTS (LOOSE MEASURE), COMPACTED TO DENSITY EQUAL TO SURROUNDING MATERIAL BUT NOT LESS THAN 98% OF MAXIMUM DENSITY AS DETERMINED BY AASHTO T180.
6) EXCAVATIONS SHALL BE DEWATERED, WHERE APPLICABLE, TO ENABLE PIPE AND APPURTENANCES TO BE INSTALLED FREE OF WATER.
7) BEDDING AND BACKFILL MATERIAL SHALL BE AS SPECIFIED IN SECTION 02200-EARTHWORK.
8) LIMEROCK BASE SHALL BE AS SPECIFIED IN SECTION 02510-ASPHALTIC PAVEMENT AND BASE.
9) SP 12.5 ASPHALTIC CONCRETE SHALL BE AS SPECIFIED IN SECTION 02510 - ASPHALTIC PAVEMENT AND BASE. PAVEMENT PATCH THICKNESS TO MATCH EXISTING PAVEMENT THICKNESS, BUT IN NO CASE LESS THAN 1-1/2".
10) OUTLINE OF TRENCH EXCAVATION IS FOR ILLUSTRATIVE PURPOSES ONLY. ACTUAL TRENCH WIDTH AND SHAPE WILL VARY WITH SOIL CONDITIONS. TRENCH EXCAVATION SHALL BE IN ACCORDANCE WITH THE "FLORIDA SAFETY ACT" AND OSHA TRENCH EXCAVATION STANDARDS.
11) ALL OPEN-CUT PIPE/CONDUIT LAYING OPERATIONS SHALL BE COMPLETED IN DRY TRENCH EXCAVATIONS PER SPECIFICATIONS.

## TYPICAL UTILITY (PIPE/CONDUIT) TRENCH BACKFILL AND BEDDING DETAIL AND NOTES

405


**ECKLER ENGINEERING, INC.**
4700 RIVERSIDE DRIVE, SUITE 110 - CORAL SPRINGS, FL 33067
(954) 510-4700 - FAX (954) 755-2741
CA No. 7803


DSGN: D.K.HAMMANN
DR: M.SIQUEIRA
CHK: 4 - Checked by
APVD: 5 - Approved by

VERIFY SCALE
1"
BAR IS ONE INCH ON ORIGINAL DRAWING. ADJUST SCALES AS NECESSARY.

| No. | DATE | REVISIONS | BY | APVD |
|---|---|---|---|---|


C & W engineering
ELECTRICAL CONSULTANTS
2775 VISTA PARKWAY, SUITE G-6, WPB, FL. 33411
(561) 642-5333 FAX (561) 966-2293
EMAIL: CWEng@CWEng.US
LICENCE NO. CA0006245
CONSULTANT

----
MICHAEL A. GUIDA, P.E.
FL #60755


**VILLAGE OF PALM SPRINGS**

SCADA SYSTEM UPGRADE MAIN WATER TREATMENT PLANT (MAIN WTP)
2021B-003

STANDARD DETAILS - ELECTRICAL

| DWG NO. | SHEET |
|---|---|
| 70 | ED-02 |
| OF 70 | PROJ. NO. 400-077.01 |
| DATE | AUGUST 26, 2020 |


File name: C:\Civil 3D Projects\400-077.01 - Scada System Upgrades Main and R. L. Pratt WTP\01_Working (Main)\400-077.01_ED-00.dwg; Plotted @: 12/23/2020 1:31:12 PM; Scale multiplier: 0.5; Printed by: Matheus Siqueira; Milestone: BID DOCUMENTS


BID DOCUMENTS

CONTRACT DOCUMENTS

# SCADA SYSTEM UPGRADE MAIN WATER TREATMENT PLANT (MAIN WTP)

BID NO.: 2021B-003

## VILLAGE OF PALM SPRINGS

FLORIDA

FOR INFORMATION REGARDING THIS PROJECT CONTACT :
ECKLER ENGINEERING, INC.
4700 RIVERSIDE DRIVE, SUITE 110 • CORAL SPRINGS, FL 33067
PH. (954) 510-4700
CA NO. 7803

BID DOCUMENTS

PROJ NO : 400-077.01
DATE : AUGUST 26, 2020

**CONTRACT DOCUMENTS**

**for the construction of the**

**SCADA SYSTEM UPGRADE**
**MAIN WATER TREATMENT PLANT**

**for the**

**VILLAGE OF PALM SPRINGS**

*** * * * ***

**CONSISTING OF:**

**BIDDING REQUIREMENTS**

**CONTRACT FORMS**

**CONDITIONS OF THE CONTRACT**

**DRAWINGS/SPECIFICATIONS**

*** * * * ***

**ECKLER ENGINEERING, INC.**
**4700 Riverside Drive, Suite 110**
**Coral Springs, Florida 33067**
**CA No. 7803**

**August 26, 2020**

**Project No. 400-077.01**

**Eckler Engineering, Inc.**
**4700 Riverside Drive, Suite 110**
**Coral Springs, FL 33067**
**CA 7803**

_____

**Douglas K. Hammann, P.E., 50589**
**General, Civil, Process**

**C & W Engineering**
**2775 Vista Parkway, Suite G-6**
**West Palm Beach, Fl. 33411**
**CA 6245**

_____

**Michael A. Guida, P.E., 60755**
**Electrical**

**SECTION 00020**

**TABLE OF CONTENTS**


| DOCUMENT NO. | TITLE | PAGES |
|---|---|---|
| **PART 1** | **BIDDING REQUIREMENTS** | |
| 00111 | Advertisement for Bids | 1-1 |
| 00200 | Instructions to Bidders | 1-9 |
| 00400 | Bid Submission Checklist | 1-1 |
| 00410 | Bid Form | 1-4 |
| 00430 | Bid Bond (Penal Sum) | 1-3 |
| 00431 | Tabulation of Subcontractors and Suppliers | 1-1 |
| 00440 | Florida Trench Safety Act Certification | 1-1 |
| 00451 | Qualification Statement | 1-8 |
| 00452 | Disputes | 1-1 |
| 00453 | Noncollusion Affidavit | 1-2 |
| 00454 | Drug-Free Workplace Certificate | 1-1 |
| 00455 | Public Entity Crimes | 1-2 |
| 00456 | Scrutinized Companies Certification Form | 1-1 |
| **PART 2** | **CONTRACT FORMS** | |
| 00510 | Notice of Award | 1-1 |
| 00520 | Agreement | 1-11 |
| 00550 | Notice to Proceed | 1-1 |
| 00610 | Performance Bond | 1-3 |
| 00615 | Payment Bond | 1-3 |
| **PART 3** | **CONTRACT CONDITIONS** | |
| 00700 | General Conditions | 1-65 |
| 00800 | Supplementary Conditions | 1-10 |
| **PART 4** | **MISCELLANEOUS DOCUMENTS** | |
| 00620 | Contractor's Application for Payment | 1-4 |
| 00625 | Certificate of Substantial Completion | 1-1 |
| 00940 | Work Change Directive | 1-1 |
| 00941 | Change Order | 1-1 |
| 00942 | Field Order | 1-1 |

**PART 5 SPECIFICATIONS**

**Division 1 – General Requirements**


| | | |
|---|---|---|
| 01005 | General Requirements | 1-16 |
| 01010 | Summary of Work | 1-3 |
| 01050 | Field Engineering | 1-3 |
| 01200 | Project Meetings | 1-3 |
| 01300 | Submittals | 1-5 |
| 01400 | Quality Control | 1-3 |
| 01500 | Construction Facilities and Temporary Controls | 1-5 |
| 01505 | Mobilization/Demobilization | 1-2 |
| 01700 | Contract Closeout | 1-3 |
| 01720 | Project Record Documents | 1-5 |
| 01730 | Operation and Maintenance Data | 1-3 |
| 01740 | Warranties and Bond | 1-2 |


**Division 2 – Sitework**


| | | |
|---|---|---|
| 02021 | Existing Underground/Aboveground Facility Location/Verification | 1-4 |
| 02072 | Demolition | 1-3 |
| 02200 | Earthwork | 1-12 |
| 02500 | Restoration and Cleanup | 1-5 |
| 02510 | Asphaltic Pavement and Base | 1-7 |
| 02630 | Concrete Sidewalks, Drives, and Curbs | 1-3 |


**Division 3 - Concrete**


| | | |
|---|---|---|
| 03300 | Concrete | 1-7 |
| 03600 | Grout | 1-4 |


**Division 4 – Not Used**

**Division 5 – Metals**


| | | |
|---|---|---|
| 05500 | Fabricated Metalwork and Castings | 1-7 |


**Division 7 – Thermal and Moisture Protection**


| | | |
|---|---|---|
| 07900 | Sealants | 1-3 |


**Division 8 – Not Used**

**Division 9 – Protective Coatings**

09900 Protective Coatings..... 1-18

**Division 7 – 12 – Not Used**

**Division 13 – Special Construction**

13700 Process Instrumentation and Controls..... 1-27
13710 Programmable Logic Controller..... 1-7
13711 Existing SCADA System Modifications..... 1-5
13712 Local HMI System Development ..... 1-5
13725 Loop Functions/Programming Strategies/Protocol..... 1-41
13750 SCADA System Software..... 1-5
13751 RTU Subsystem ..... 1-4
13752 Computers and Accessories..... 1-5
13753 Operator Consoles and Accessories ..... 1-3
13759 Modifications to Existing Field panels, MCC's and PLC's.... 1-2

**Division 16 – Electrical**

16000 Electrical General Requirements..... 1-5
16001 Electrical Demolition ..... 1-2
16050 Basic Materials and Methods ..... 1-12

**PART 6 APPENDICES – N/A**

# PART 1




# BIDDING REQUIREMENTS

**VILLAGE OF PALM SPRINGS**
**PALM SPRINGS, FL**
**ITB NO. 2021B-003**
**SCADA SYSTEM UPGRADE – MAIN WATER TREATMENT PLANT**

## ADVERTISEMENT FOR BIDS

Electronic sealed Bids for the construction of the **SCADA System Upgrade, Main Water Treatment Plant,** will be received by the **Village of Palm Springs** at the **Office of the Village Clerk until 2:00 PM, local time on February 11, 2021**, at which time the Bids received will be publicly opened and read**. All bids received after the deadline will be returned unopened. T**he Village of Palm Springs will provide for public participation through Gotowebinar.com, a communication media technology (teleconference) for the **Bid Opening.** The Physical Point of Access is Village Hall, located at 226 Cypress Lane, Palm Springs, FL 33461.

Participants can use their telephone or computer mic & speakers (VoIP).
United States (631) 992-3221Access Code# 176-099-922
Registration URL: https://attendee.gotowebinar.com/register/5565251084037966608
Webinar ID: 713-249-811

The Project consists of furnishing all labor, equipment and material for the Main Water Treatment Plant SCADA System Upgrade as described by the Drawings and Specifications. Generally, the work includes minor demolition, installation of new Control panels and SCADA Computers, network improvements, SCADA Software upgrades, programming, electrical, site restoration and all other incidentals as indicated by the drawings and specifications or as required to properly complete the project as planned.

Invitation to Bid documents are available beginning **January 14, 2021**. The Village of Palm Springs utilizes electronic online services for notification, distribution, and submittal of its Solicitation documents. The Village's Solicitation information can be obtained from: (a) Demandstar website – www.Demandstar.com; (b) contact the Village Clerk, Kimberly Wynn, at kwynn@vpsfl.org; (c) call the Village Clerk's office at (561) 965-4010.

Hard copies of bidding Documents may be obtained from Eckler Engineering, Inc. on Mondays through Fridays between the hours of 8:00 AM to 5:00 PM. Bidding Documents are available on compact disc (as portable document format (PDF) files) for a non-refundable charge of $25.00, including shipping via overnight express service. Alternatively, printed Bidding Documents may be obtained from Eckler Engineering, Inc. either via in-person pick-up or via mail, upon receipt of payment for the Bidding Documents. The non-refundable cost of printed Bidding Documents is $160.00 per set, payable to Eckler Engineering, Inc.

Proposers may submit their responses electronically via DemandStar. Proposers also have the option to submit one (1) unbound original, one (1) copy to the Village Clerk at the time and date specified. Sealed Proposals must be marked **"ITB #2021B-003, SCADA SYSTEM UPGRADE – MAIN WATER TREATMENT PLANT"**.

A **Pre-Bid Conference** will be held remotely for this solicitation on **January 26, 2021, at 2:00 PM.** Attendance at the pre-bid conference is not mandatory. The Village of Palm Springs will provide for public participation through Gotowebinar.com, a communication media technology (teleconference) for the **pre-bid conference**. The Physical Point of Access is Village Hall at 226 Cypress Lane, Palm Springs, FL 33461.

Participants can use their telephone or computer mic & speakers (VoIP).
United States +1 (562) 247-8422 Access Code# 117-702-545
Registration URL: https://attendee.gotowebinar.com/register/409158375791262224
Webinar ID: 601-772-467

Bid security shall be furnished in accordance with the Instructions to Bidders.

Any questions regarding the specifications and Solicitation process must be submitted in writing to the Village Clerk at kwynn@vpsfl.org, Questions and requests for clarification and additional information must be received prior to the Deadline for Submission of Questions on **January 29, 2021,** at 5:00 PM local time.

Pursuant to Section 2-355 of Palm Beach County Ordinance No. 2011-039, and the purchasing policies of the Village of Palm Springs, all Solicitations, once advertised, are under the "Cone of Silence" until the appropriate authority has approved an award recommendation, rejected all responses or some other action by the Village to end the selection process. This limit and requires documentation of communications between potential Bidders and/or Bidders on Village Solicitations, the Village's professional staff, and the Village Council members.

Village of Palm Springs
Kimberly Wynn, Village Clerk
January 14, 2021
Lake Worth Herald and Demandstar

+ + END OF ADVERTISEMENT FOR BIDS + +

**SECTION 00200**

**INSTRUCTIONS TO BIDDERS**

**TABLE OF CONTENTS**


**Page**

ARTICLE 1 – Defined Terms ..... 1
ARTICLE 2 – Copies of Bidding Documents ..... 1
ARTICLE 3 – Qualifications of Bidders ..... 1
ARTICLE 4 – Site and Other Areas; Existing Site Conditions; Examination of Site; Owner's Safety Program; Other Work at the Site ..... 2
ARTICLE 5 – Bidder's Representations ..... 3
ARTICLE 6 – Pre-Bid Conference ..... 4
ARTICLE 7 – Interpretations and Addenda ..... 4
ARTICLE 8 – Bid Security ..... 4
ARTICLE 9 – Contract Times ..... 5
ARTICLE 10 – Liquidated Damages ..... 5
ARTICLE 11 – Substitute and "Or-Equal" Items ..... 5
ARTICLE 12 – Subcontractors, Suppliers, and Others ..... 5
ARTICLE 13 – Preparation of Bid ..... 6
ARTICLE 14 – Basis of Bid ..... 6
ARTICLE 15 – Submittal of Bid ..... 7
ARTICLE 16 – Modification and Withdrawal of Bid ..... 8
ARTICLE 17 – Opening of Bids ..... 8
ARTICLE 18 – Bids to Remain Subject to Acceptance ..... 8
ARTICLE 19 – Evaluation of Bids and Award of Contract ..... 8
ARTICLE 20 – Bonds and Insurance ..... 9
ARTICLE 21 – Signing of Agreement ..... 9
ARTICLE 22 – Sales and Use Tax ..... 9




**Copyright © 2013 National Society of Professional Engineers, American Council of Engineering Companies, and American Society of Civil Engineers. All rights reserved.**

**ARTICLE 1 – DEFINED TERMS**

1.01 Terms used in these Instructions to Bidders have the meanings indicated in the General Conditions and Supplementary Conditions. Additional terms used in these Instructions to Bidders have the meanings indicated below:

A. *Issuing Office* – The office from which the Bidding Documents are to be issued.

**ARTICLE 2 – COPIES OF BIDDING DOCUMENTS**

2.01 Complete sets of the Bidding Documents may be obtained from the Issuing Office in the number and format stated in the advertisement or invitation to bid.

2.02 Complete sets of Bidding Documents shall be used in preparing Bids; neither Owner nor Engineer assumes any responsibility for errors or misinterpretations resulting from the use of incomplete sets of Bidding Documents.

2.03 Owner and Engineer, in making copies of Bidding Documents available on the above terms, do so only for the purpose of obtaining Bids for the Work and do not authorize or confer a license for any other use.

**ARTICLE 3 – QUALIFICATIONS OF BIDDERS**

3.01 To demonstrate Bidder's qualifications to perform the Work, Bidder shall submit with its Bid (a) written evidence establishing its qualifications such as financial data, previous experience, present commitments, and other such information as may be called for in Section 00451, and (b) the following additional information:

A. Evidence of Bidder's authority to do business in the State of Florida.

B. State of Florida general contractor license number (provide current copy).

C. [Subcontractor and Supplier qualification information; coordinate with provisions of Article 12 of these Instructions, "Subcontractors, Suppliers, and Others."]

D. Provide a minimum of five (5) similar projects which have been completed within the past ten (10) years per Section 00451 – Qualification Statement, including project description, final project cost, owner's name, address, and phone number. A similar project shall be defined as utility structure improvement of similar size and complexity.

E. Current Certificate of Insurance per the requirements of Section 00520 – Agreement, Article 10.10.

3.02 A Bidder's failure to submit required qualification information within the times indicated may disqualify Bidder from receiving an award of the Contract.

3.03 No requirement in this Article 3 to submit information will prejudice the right of Owner to seek additional pertinent information regarding Bidder's qualifications.

3.04 Bidder is advised to carefully review those portions of the Bid Form requiring Bidder's representations and certifications.

**ARTICLE 4 – SITE AND OTHER AREAS; EXISTING SITE CONDITIONS; EXAMINATION OF SITE; OWNER'S SAFETY PROGRAM; OTHER WORK AT THE SITE**

4.01 *Site and Other Areas*

A. The Site is identified in the Bidding Documents. By definition, the Site includes rights-of-way, easements, and other lands furnished by Owner for the use of the Contractor. Any additional lands required for temporary construction facilities, construction equipment, or storage of materials and equipment, and any access needed for such additional lands, are to be obtained and paid for by Contractor.

4.02 *Existing Site Conditions*

A. Subsurface and Physical Conditions; Hazardous Environmental Conditions

1. The Supplementary Conditions identify:

a. those reports known to Owner of explorations and tests of subsurface conditions at or adjacent to the Site, if any.

b. those drawings known to Owner of physical conditions relating to existing surface or subsurface structures at the Site (except Underground Facilities), if any.

2. Owner will make copies of reports and drawings referenced above available to any Bidder on request. These reports and drawings are not part of the Contract Documents, but the Technical Data contained therein upon whose accuracy Bidder is entitled to rely, as provided in the General Conditions, has been identified and established in the Supplementary Conditions. Bidder is responsible for any interpretation or conclusion Bidder draws from any Technical Data or any other data, interpretations, opinions, or information contained in such reports or shown or indicated in such drawings.

3. If the Supplementary Conditions do not identify Technical Data, the default definition of Technical Data set forth in Article 1 of the General Conditions will apply.

B. Underground Facilities: Information and data shown or indicated in the Bidding Documents with respect to existing Underground Facilities at or adjacent to the Site are set forth in the Contract Documents and are based upon information and data furnished to Owner and Engineer by owners of such Underground Facilities, including Owner, or others.

C. Adequacy of Data: Provisions concerning responsibilities for the adequacy of data furnished to prospective Bidders with respect to subsurface conditions, other physical conditions, and Underground Facilities, and possible changes in the Bidding Documents due to differing or unanticipated subsurface or physical conditions appear in Paragraphs 5.03, 5.04, and 5.05 of the General Conditions. Provisions concerning responsibilities for the adequacy of data furnished to prospective Bidders with respect to a Hazardous Environmental Condition at the Site, if any, and possible changes in the Contract Documents due to any Hazardous Environmental Condition uncovered or revealed at the Site which was not shown or indicated in the Drawings or Specifications or identified in the Contract Documents to be within the scope of the Work, appear in Paragraph 5.06 of the General Conditions.

4.03 *Site Visit and Testing by Bidders*

A. On request, the Owner will provide the Bidder access to the Site visit during normal working hours. Bidder shall not disturb any ongoing operations at the Site.

B. On request, and to the extent Owner has control over the Site, and schedule permitting, the Owner will provide Bidder access to the Site to conduct such additional examinations,

investigations, explorations, tests, and studies as Bidder deems necessary for preparing and submitting a successful Bid. Owner will not have any obligation to grant such access if doing so is not practical because of existing operations, security or safety concerns, or restraints on Owner's authority regarding the Site.

C. Bidder shall comply with all applicable Laws and Regulations regarding excavation and location of utilities, obtain all permits, and comply with all terms and conditions established by Owner or by property owners or other entities controlling the Site with respect to schedule, access, existing operations, security, liability insurance, and applicable safety programs.

D. Bidder shall fill all holes and clean up and restore the Site to its former condition upon completion of such explorations, investigations, tests, and studies.

E. Bidder shall not disturb any ongoing operations at the Site.

**ARTICLE 5 – BIDDER'S REPRESENTATIONS**

5.01 It is the responsibility of each Bidder before submitting a Bid to:

A. examine and carefully study the Bidding Documents, and any data and reference items identified in the Bidding Documents;

B. visit the Site, conduct a thorough, alert visual examination of the Site and adjacent areas, and become familiar with and satisfy itself as to the general, local, and Site conditions that may affect cost, progress, and performance of the Work;

C. become familiar with and satisfy itself as to all Laws and Regulations that may affect cost, progress, and performance of the Work;

D. carefully study all: (1) reports of explorations and tests of subsurface conditions at or adjacent to the Site and all drawings of physical conditions relating to existing surface or subsurface structures at the Site that have been identified in the Supplementary Conditions, especially with respect to Technical Data in such reports and drawings, and (2) reports and drawings relating to Hazardous Environmental Conditions, if any, at or adjacent to the Site that have been identified in the Supplementary Conditions, especially with respect to Technical Data in such reports and drawings;

E. consider the information known to Bidder itself; information commonly known to contractors doing business in the locality of the Site; information and observations obtained from visits to the Site; the Bidding Documents; and the Site-related reports and drawings identified in the Bidding Documents, with respect to the effect of such information, observations, and documents on (1) the cost, progress, and performance of the Work; (2) the means, methods, techniques, sequences, and procedures of construction to be employed by Bidder; and (3) Bidder's safety precautions and programs;

F. agree, based on the information and observations referred to in the preceding paragraph, that at the time of submitting its Bid no further examinations, investigations, explorations, tests, studies, or data are necessary for the determination of its Bid for performance of the Work at the price bid and within the times required, and in accordance with the other terms and conditions of the Bidding Documents;

G. become aware of the general nature of the work to be performed by Owner and others at the Site that relates to the Work as indicated in the Bidding Documents;

H. promptly give Engineer written notice of all conflicts, errors, ambiguities, or discrepancies that Bidder discovers in the Bidding Documents and confirm that the written resolution thereof by Engineer is acceptable to Bidder;

I. determine that the Bidding Documents are generally sufficient to indicate and convey understanding of all terms and conditions for the performance and furnishing of the Work; and

J. agree that the submission of a Bid will constitute an incontrovertible representation by Bidder that Bidder has complied with every requirement of this Article, that without exception the Bid and all prices in the Bid are premised upon performing and furnishing the Work required by the Bidding Documents.

**ARTICLE 6 – PRE-BID CONFERENCE**

6.01 A pre-Bid conference will be held at the time and location stated in the invitation or advertisement to bid. Representatives of Owner and Engineer will be present to discuss the Project. Bidders are encouraged to attend and participate in the conference. Owner will transmit to all prospective Bidders of record such Addenda as Owner and Engineer considers necessary in response to questions arising at the conference. Oral statements may not be relied upon and will not be binding or legally effective.

**ARTICLE 7 – INTERPRETATIONS AND ADDENDA**

7.01 All questions about the meaning or intent of the Bidding Documents are to be submitted to Owner in writing to the email address stated in the invitation or advertisement to bid. Interpretations or clarifications considered necessary by Owner or Engineer in response to such questions will be issued by Addenda delivered to all parties recorded as having received the Bidding Documents. Questions received less than seven days prior to the date for opening of Bids may not be answered. Only questions answered by Addenda will be binding. Oral and other interpretations or clarifications will be without legal effect.

7.02 Addenda may be issued to clarify, correct, supplement, or change the Bidding Documents.

**ARTICLE 8 – BID SECURITY**

8.01 A Bid must be accompanied by Bid security made payable to Owner in an amount of 5 percent of Bidder's maximum Bid price (determined by adding the base bid and all alternates) and in the form of a certified check, bank money order, or a Bid bond (on the form included in the Bidding Documents) issued by a surety meeting the requirements of Paragraphs 6.01 and 6.02 of the General Conditions.

8.02 The Bid security of the apparent Successful Bidder will be retained until Owner awards the contract to such Bidder, and such Bidder has executed the Contract Documents, furnished the required contract security, and met the other conditions of the Notice of Award, whereupon the Bid security will be released. If the Successful Bidder fails to execute and deliver the Contract Documents and furnish the required contract security within 15 days after the Notice of Award, Owner may consider Bidder to be in default, annul the Notice of Award, and the Bid security of that Bidder will be forfeited. Such forfeiture shall be Owner's exclusive remedy if Bidder defaults.

8.03 The Bid security of other Bidders that Owner believes to have a reasonable chance of receiving the award may be retained by Owner until the earlier of seven days after the Effective Date of

the Contract or 121 days after the Bid opening, whereupon Bid security furnished by such Bidders will be released.

8.04 Bid security of other Bidders that Owner believes do not have a reasonable chance of receiving the award will be released within seven days after the Bid opening.

**ARTICLE 9 – CONTRACT TIMES**

9.01 The number of days within which, or the dates by which, the Work is to be substantially completed, and completed and ready for final payment, are set forth in the Agreement.

**ARTICLE 10 – LIQUIDATED DAMAGES**

10.01 Provisions for liquidated damages, if any, for failure to timely attain a Milestone, Substantial Completion, or completion of the Work in readiness for final payment, are set forth in the Agreement.

**ARTICLE 11 – SUBSTITUTE AND "OR-EQUAL" ITEMS**

11.01 Not used.

11.02 All prices that Bidder sets forth in its Bid shall be based on the presumption that the Contractor will furnish the materials and equipment specified or described in the Bidding Documents, as supplemented by Addenda. Any assumptions regarding the possibility of post-Bid approvals of "or-equal" or substitution requests are made at Bidder's sole risk.

**ARTICLE 12 – SUBCONTRACTORS, SUPPLIERS, AND OTHERS**

12.01 A Bidder shall be prepared to retain specific Subcontractors, Suppliers, or other individuals or entities for the performance of the Work if required by the Bidding Documents (most commonly in the Specifications) to do so. If a prospective Bidder objects to retaining any such Subcontractor, Supplier, or other individual or entity, and the concern is not relieved by an Addendum, then the prospective Bidder should refrain from submitting a Bid.

12.02 Subsequent to the submittal of the Bid, Owner may not require the Successful Bidder or Contractor to retain any Subcontractor, Supplier, or other individual or entity against which Contractor has reasonable objection.

12.03 Unless otherwise required to be submitted with the Bid, the apparent Successful Bidder, and any other Bidder so requested, shall within five days after Bid opening, submit to Owner a list of the Subcontractors or Suppliers for which such identification is required

Such list shall be accompanied by an experience statement with pertinent information regarding similar projects and other evidence of qualification for each such Subcontractor, Supplier, or other individual or entity. If Owner or Engineer, after due investigation, has reasonable objection to any proposed Subcontractor, Supplier, individual, or entity, Owner may, before the Notice of Award is given, request apparent Successful Bidder to submit an acceptable substitute, in which case apparent Successful Bidder shall submit a substitute, Bidder's Bid price will be increased (or decreased) by the difference in cost occasioned by such substitution, and Owner may consider such price adjustment in evaluating Bids and making the Contract award.

12.04 If apparent Successful Bidder declines to make any such substitution, Owner may award the Contract to the next lowest Bidder that proposes to use acceptable Subcontractors, Suppliers, or other individuals or entities. Declining to make requested substitutions will constitute grounds for forfeiture of the Bid security of any Bidder. Any Subcontractor, Supplier, individual, or entity

so listed and against which Owner or Engineer makes no written objection prior to the giving of the Notice of Award will be deemed acceptable to Owner and Engineer subject to subsequent revocation of such acceptance as provided in Paragraph 7.06 of the General Conditions.

**ARTICLE 13 – PREPARATION OF BID**

13.01 The Bid Form is included with the Bidding Documents.

A. All blanks on the Bid Form shall be completed in ink and the Bid Form signed in ink. Erasures or alterations shall be initialed in ink by the person signing the Bid Form. A Bid price shall be indicated for each section, Bid item, alternate, adjustment unit price item, and unit price item listed therein.

B. If the Bid Form expressly indicates that submitting pricing on a specific alternate item is optional, and Bidder elects to not furnish pricing for such optional alternate item, then Bidder may enter the words "No Bid" or "Not Applicable."

13.02 A Bid by a corporation shall be executed in the corporate name by a corporate officer (whose title must appear under the signature), accompanied by evidence of authority to sign. The corporate address and state of incorporation shall be shown.

13.03 A Bid by a partnership shall be executed in the partnership name and signed by a partner (whose title must appear under the signature), accompanied by evidence of authority to sign. The partnership's address for receiving notices shall be shown.

13.04 A Bid by a limited liability company shall be executed in the name of the firm by a member or other authorized person and accompanied by evidence of authority to sign. The state of formation of the firm and the firm's address for receiving notices shall be shown.

13.05 A Bid by an individual shall show the Bidder's name and address for receiving notices.

13.06 A Bid by a joint venture shall be executed by an authorized representative of each joint venturer in the manner indicated on the Bid Form. The joint venture's address for receiving notices shall be shown.

13.07 All names shall be printed in ink below the signatures.

13.08 The Bid shall contain an acknowledgment of receipt of all Addenda, the numbers of which shall be filled in on the Bid Form.

13.09 Postal and e-mail addresses and telephone number for communications regarding the Bid shall be shown.

13.10 The Bid shall contain evidence of Bidder's authority and qualification to do business in the state where the Project is located, or Bidder shall covenant in writing to obtain such authority and qualification prior to award of the Contract and attach such covenant to the Bid. Bidder's state contractor license number, if any, shall also be shown on the Bid Form.

**ARTICLE 14 – BASIS OF BID**

14.01 *Lump Sum*

A. Bidders shall submit a Bid on a lump sum basis as set forth in the Bid Form.

14.02 *Unit Price*

A. Bidders shall submit a Bid on a unit price basis for each item of Work listed in the unit price section of the Bid Form.

B. The “Bid Price” (sometimes referred to as the extended price) for each unit price Bid item will be the product of the “Estimated Quantity” (which Owner or its representative has set forth in the Bid Form) for the item and the corresponding “Bid Unit Price” offered by the Bidder. The total of all unit price Bid items will be the sum of these “Bid Prices”; such total will be used by Owner for Bid comparison purposes. The final quantities and Contract Price will be determined in accordance with Paragraph 13.03 of the General Conditions.

C. Discrepancies between the multiplication of units of Work and unit prices will be resolved in favor of the unit prices. Discrepancies between the indicated sum of any column of figures and the correct sum thereof will be resolved in favor of the correct sum.

14.03 *Allowances*

A. For cash allowances the Bid price shall include such amounts as the Bidder deems proper for Contractor's overhead, costs, profit, and other expenses on account of cash allowances, if any, named in the Contract Documents, in accordance with Paragraph 13.02.B of the General Conditions.

**ARTICLE 15 – SUBMITTAL OF BID**

15.01 With each copy of the Bidding Documents, a Bidder is furnished one separate unbound copy of the Bid Form, and, if required, the Bid Bond Form. The unbound copy of the Bid Form is to be completed and submitted with the Bid security and the other documents required to be submitted under the terms of Article 7 of the Bid Form.

15.02 A Bid shall be received no later than the date and time prescribed and at the place indicated in the advertisement or invitation to bid and shall be enclosed in a plainly marked package with the Project title (and, if applicable, the designated portion of the Project for which the Bid is submitted), the name and address of Bidder, and shall be accompanied by the Bid security and other required documents. If a Bid is sent by mail or other delivery system, the sealed envelope containing the Bid shall be enclosed in a separate package plainly marked on the outside with the notation “BID ENCLOSED.” A mailed Bid shall be addressed to 226 Cypress Lane, Palm Springs, FL 33461.

15.03 Bids received after the date and time prescribed for the opening of bids, or not submitted at the correct location or in the designated manner, will not be accepted and will be returned to the Bidder unopened.

15.04 The following documents shall be submitted with and made a part of the Bid:

Section 00400 Bid Submission checklist
Section 00410 Bid Form
Section 00430 Bid Bond
Section 00431 Tabulation of Subcontractor and Suppliers
Section 00440 Florida Trench Safety Act Certification
Section 00451 Qualifications Statement
Section 00452 Bidder’s Statement of Disputes, Litigation, Arbitration, and Surety Completion
Section 00453 Noncollusion Affidavit
Section 00454 Drug-Free Workplace Certificate
Section 00455 Sworn Statement on Public Entity Crimes
Section 00456 Scrutinized Companies Certification Form
Certificate of Insurance

**ARTICLE 16 – MODIFICATION AND WITHDRAWAL OF BID**

16.01 A Bid may be withdrawn by an appropriate document duly executed in the same manner that a Bid must be executed and delivered to the place where Bids are to be submitted prior to the date and time for the opening of Bids. Upon receipt of such notice, the unopened Bid will be returned to the Bidder.

16.02 If a Bidder wishes to modify its Bid prior to Bid opening, Bidder must withdraw its initial Bid in the manner specified in Paragraph 16.01 and submit a new Bid prior to the date and time for the opening of Bids.

16.03 If within 24 hours after Bids are opened any Bidder files a duly signed written notice with Owner and promptly thereafter demonstrates to the reasonable satisfaction of Owner that there was a material and substantial mistake in the preparation of its Bid, that Bidder may withdraw its Bid, and the Bid security will be returned. Thereafter, if the Work is rebid, that Bidder will be disqualified from further bidding on the Work.

**ARTICLE 17 – OPENING OF BIDS**

17.01 Bids will be opened at the time and place indicated in the advertisement or invitation to bid and, unless obviously non-responsive, read aloud publicly. An abstract of the amounts of the base Bids and major alternates, if any, will be made available to Bidders after the opening of Bids.

**ARTICLE 18 – BIDS TO REMAIN SUBJECT TO ACCEPTANCE**

18.01 All Bids will remain subject to acceptance for the period of time stated in the Bid Form, but Owner may, in its sole discretion, release any Bid and return the Bid security prior to the end of this period.

**ARTICLE 19 – EVALUATION OF BIDS AND AWARD OF CONTRACT**

19.01 Owner reserves the right to reject any or all Bids, including without limitation, nonconforming, nonresponsive, unbalanced, or conditional Bids. Owner will reject the Bid of any Bidder that Owner finds, after reasonable inquiry and evaluation, to not be responsible. If Bidder purports to add terms or conditions to its Bid, takes exception to any provision of the Bidding Documents, or attempts to alter the contents of the Contract Documents for purposes of the Bid, then the Owner will reject the Bid as nonresponsive; provided that Owner also reserves the right to waive all minor informalities not involving price, time, or changes in the Work.

19.02 If Owner awards the contract for the Work, such award shall be to the responsible Bidder submitting the lowest responsive Bid.

19.03 Evaluation of Bids

A. In evaluating Bids, Owner will consider whether or not the Bids comply with the prescribed requirements, and such alternates, unit prices, and other data, as may be requested in the Bid Form or prior to the Notice of Award.

19.04 In evaluating whether a Bidder is responsible, Owner will consider the qualifications of the Bidder and may consider the qualifications and experience of Subcontractors and Suppliers proposed for those portions of the Work for which the identity of Subcontractors and Suppliers must be submitted as provided in the Bidding Documents.

19.05 Owner may conduct such investigations as Owner deems necessary to establish the responsibility, qualifications, and financial ability of Bidders and any proposed Subcontractors or Suppliers.

**ARTICLE 20 – BONDS AND INSURANCE**

20.01 Article 6 of the General Conditions, as may be modified by the Supplementary Conditions, sets forth Owner's requirements as to performance and payment bonds and insurance. When the Successful Bidder delivers the Agreement (executed by Successful Bidder) to Owner, it shall be accompanied by required bonds and insurance documentation.

**ARTICLE 21 – SIGNING OF AGREEMENT**

21.01 When Owner issues a Notice of Award to the Successful Bidder, it shall be accompanied by the unexecuted counterparts of the Agreement along with the other Contract Documents as identified in the Agreement. Within 15 days thereafter, Successful Bidder shall execute and deliver the required number of counterparts of the Agreement (and any bonds and insurance documentation required to be delivered by the Contract Documents) to Owner. Within ten days thereafter, Owner shall deliver one fully executed counterpart of the Agreement to Successful Bidder, together with printed and electronic copies of the Contract Documents as stated in Paragraph 2.02 of the General Conditions.

**ARTICLE 22 – SALES AND USE TAX**

22.01 CONTRACTOR is responsible for all sales and use taxes applicable to this project.

**SECTION 00400**

**BID SUBMISSION CHECKLIST**

Project Name: **SCADA SYSTEM UPGRADE, MAIN WATER TREATMENT PLANT**

Bid Number: **2021B-003**

Bidder=s Name: _____

The following items must be submitted in the following order with your bid:

1. 9 Completed Section 00400 - Bid Submission Checklist.

2. 9 Completed Section 00410 - Bid Form.

3. 9 Completed Section 00430 - Bid Bond, complete with Power of Attorney.

4. 9 Completed Section 00431 – Tabulation of Subcontractors and Suppliers.

5. 9 Completed Section 00440 – Florida Trench Safety Act Certification.

6. 9 Completed Section 00451 –Qualifications Statement.

7. 9 Completed Section 00452 – Bidder's Statement of Disputes, Litigation, Arbitration, and Surety Completion – Last Three (3) Years

8. 9 Completed Section 00453 - Non-Collusive Affidavit.

9. 9 Completed Section 00454 - Drug-Free Workplace.

10. 9 Completed Section 00455 - Public Entity Crimes.

11. 9 Completed Section 00456 - Scrutinized Companies Certification Form.

12. 9 Provide requested bidder qualification information per Section 00200 - Instructions to Bidders, Articles 3.1, 3.2, 3.3, and 3.4.

13. 9 Current insurance certificate showing that bidder can meet the insurance requirements per Specification Section 00815 - Supplementary Conditions, Article SC-5.04 and SC-5.06, A.

14. 9 Signed copy of all Addenda.

Submit one (1) original and two (2) copies of all documents listed above. Original shall be clearly marked Original.

Failure to provide the above listed items may result in your bid being deemed non-responsive.

END OF SECTION

# SECTION 00410

# BID FORM

## ARTICLE 1 – BID RECIPIENT

1.01 This Bid is submitted to:

**Village of Palm Springs**
**226 Cypress Lane**
**Palm Springs, FL 33461**

1.02 The undersigned Bidder proposes and agrees, if this Bid is accepted, to enter into an Agreement with Owner in the form included in the Bidding Documents to perform all Work as specified or indicated in the Bidding Documents for the prices and within the times indicated in this Bid and in accordance with the other terms and conditions of the Bidding Documents.

## ARTICLE 2 – BIDDER'S ACKNOWLEDGEMENTS

2.01 Bidder accepts all of the terms and conditions of the Instructions to Bidders, including without limitation those dealing with the disposition of Bid security. This Bid will remain subject to acceptance for 120 days after the Bid opening, or for such longer period of time that Bidder may agree to in writing upon request of Owner.

## ARTICLE 3 – BIDDER'S REPRESENTATIONS

3.01 In submitting this Bid, Bidder represents that:

A. Bidder has examined and carefully studied the Bidding Documents, and any data and reference items identified in the Bidding Documents, and hereby acknowledges receipt of the following Addenda:

| Addendum No. | Addendum, Date |
|---|---|
| | |
| | |
| | |
| | |

B. Bidder has visited the Site, conducted a thorough, alert visual examination of the Site and adjacent areas, and become familiar with and satisfied itself as to the general, local, and Site conditions that may affect cost, progress, and performance of the Work.

C. Bidder is familiar with and has satisfied itself as to all Laws and Regulations that may affect cost, progress, and performance of the Work.

D. Not used.

E. Bidder has considered the information known to Bidder itself; information commonly known to contractors doing business in the locality of the Site; information and observations obtained from visits to the Site; the Bidding Documents; and any Site-related reports and drawings identified in the Bidding Documents, with respect to the effect of such information, observations, and documents on (1) the cost, progress, and

performance of the Work; (2) the means, methods, techniques, sequences, and procedures of construction to be employed by Bidder; and (3) Bidder's safety precautions and programs.

F. Bidder agrees, based on the information and observations referred to in the preceding paragraph, that no further examinations, investigations, explorations, tests, studies, or data are necessary for the determination of this Bid for performance of the Work at the price bid and within the times required, and in accordance with the other terms and conditions of the Bidding Documents.

G. Bidder is aware of the general nature of work to be performed by Owner and others at the Site that relates to the Work as indicated in the Bidding Documents.

H. Bidder has given Engineer written notice of all conflicts, errors, ambiguities, or discrepancies that Bidder has discovered in the Bidding Documents, and confirms that the written resolution thereof by Engineer is acceptable to Bidder.

I. The Bidding Documents are generally sufficient to indicate and convey understanding of all terms and conditions for the performance and furnishing of the Work.

J. The submission of this Bid constitutes an incontrovertible representation by Bidder that Bidder has complied with every requirement of this Article, and that without exception the Bid and all prices in the Bid are premised upon performing and furnishing the Work required by the Bidding Documents.

**ARTICLE 4 – BIDDER'S CERTIFICATION**

4.01 Bidder certifies that:

A. This Bid is genuine and not made in the interest of or on behalf of any undisclosed individual or entity and is not submitted in conformity with any collusive agreement or rules of any group, association, organization, or corporation;

B. Bidder has not directly or indirectly induced or solicited any other Bidder to submit a false or sham Bid;

C. Bidder has not solicited or induced any individual or entity to refrain from bidding; and

D. Bidder has not engaged in corrupt, fraudulent, collusive, or coercive practices in competing for the Contract. For the purposes of this Paragraph 4.01.D:

1. "corrupt practice" means the offering, giving, receiving, or soliciting of any thing of value likely to influence the action of a public official in the bidding process;

2. "fraudulent practice" means an intentional misrepresentation of facts made (a) to influence the bidding process to the detriment of Owner, (b) to establish bid prices at artificial non-competitive levels, or (c) to deprive Owner of the benefits of free and open competition;

3. "collusive practice" means a scheme or arrangement between two or more Bidders, with or without the knowledge of Owner, a purpose of which is to establish bid prices at artificial, non-competitive levels; and

4. "coercive practice" means harming or threatening to harm, directly or indirectly, persons or their property to influence their participation in the bidding process or affect the e execution of the Contract.

**ARTICLE 5 – BASIS OF BID**

5.01 Bidder will complete the Work in accordance with the Contract Documents for the following price(s):

| | |
|---|---|
| Lump Sum Bid Price | $ |
| Lump Sum Contingency Allowance (Section 01010, 1.05) | $ 50,000.00 |

**Total of Lump Sum Price** $ _____

_____

(written)

**ARTICLE 6 – TIME OF COMPLETION**

6.01 Bidder agrees that the Work will be substantially complete within 270 calendar days after the date when the Contract Times commence to run as provided in Paragraph 4.01 of the General Conditions, and will be completed and ready for final payment in accordance with Paragraph 15.06 of the General Conditions within 300 calendar days after the date when the Contract Times commence to run.

6.02 Bidder accepts the provisions of the Agreement as to liquidated damages.

**ARTICLE 7 – ATTACHMENTS TO THIS BID**

7.01 The following documents are submitted with and made a condition of this Bid:

A. Required Bid security;

B. List of Proposed Subcontractors;

C. List of Proposed Suppliers;

D. List of Project References;

E. Evidence of authority to do business in the state of the Project;

F. Contractor's License Number;

G. Required Bidder Qualification Statement with supporting data; and

H. Documentation per Section 00200 – Instructions to bidders, page 8, Article 15.04.

**ARTICLE 8 – DEFINED TERMS**

8.01 The terms used in this Bid with initial capital letters have the meanings stated in the Instructions to Bidders, the General Conditions, and the Supplementary Conditions.

**ARTICLE 9 – BID SUBMITTAL**

BIDDER: *[Indicate correct name of bidding entity]*

_____

By:
*[Signature]* _____

*[Printed name]* _____
*(If Bidder is a corporation, a limited liability company, a partnership, or a joint venture, attach evidence of authority to sign.)*

Attest:
*[Signature]* _____

*[Printed name]* _____

Title: _____

Submittal Date: _____

Address for giving notices:

_____

_____

_____

Telephone Number: _____

Fax Number: _____

Contact Name and e-mail address: _____

_____

Bidder's License No.: _____
*(where applicable)*

*NOTE TO USER: Use in those states or other jurisdictions where applicable or required.*

# SECTION 00430
# BID BOND

Any singular reference to Bidder, Surety, Owner or other party shall be considered plural where applicable.

BIDDER *(Name and Address)*:

SURETY *(Name, and Address of Principal Place of Business)*:

OWNER
Village of Palm Springs
226 Cypress Lane
Palm Springs, FL 33461

BID
Bid Due Date: February 11, 2021
Description: SCADA System Upgrade, Main Water Treatment Plant

BOND
Bond Number:
Date:
Penal sum _____ $ _____
(Words) (Figures)

Surety and Bidder, intending to be legally bound hereby, subject to the terms set forth below, do each cause this Bid Bond to be duly executed by an authorized officer, agent, or representative.

| **BIDDER** | **SURETY** |
|---|---|
| _____ (Seal) | _____ (Seal) |
| Bidder's Name and Corporate Seal | Surety's Name and Corporate Seal |
| By: _____ | By: _____ |
| Signature | Signature (Attach Power of Attorney) |
| _____ | _____ |
| Print Name | Print Name |
| _____ | _____ |
| Title | Title |
| Attest: _____ | Attest: _____ |
| Signature | Signature |
| Title | Title |

*Note: Addresses are to be used for giving any required notice.*
*Provide execution by any additional parties, such as joint venturers, if necessary.*

1. Bidder and Surety, jointly and severally, bind themselves, their heirs, executors, administrators, successors, and assigns to pay to Owner upon default of Bidder the penal sum set forth on the face of this Bond. Payment of the penal sum is the extent of Bidder's and Surety's liability. Recovery of such penal sum under the terms of this Bond shall be Owner's sole and exclusive remedy upon default of Bidder.

2. Default of Bidder shall occur upon the failure of Bidder to deliver within the time required by the Bidding Documents (or any extension thereof agreed to in writing by Owner) the executed Agreement required by the Bidding Documents and any performance and payment bonds required by the Bidding Documents.

3. This obligation shall be null and void if:

3.1 Owner accepts Bidder's Bid and Bidder delivers within the time required by the Bidding Documents (or any extension thereof agreed to in writing by Owner) the executed Agreement required by the Bidding Documents and any performance and payment bonds required by the Bidding Documents, or

3.2 All Bids are rejected by Owner, or

3.3 Owner fails to issue a Notice of Award to Bidder within the time specified in the Bidding Documents (or any extension thereof agreed to in writing by Bidder and, if applicable, consented to by Surety when required by Paragraph 5 hereof).

4. Payment under this Bond will be due and payable upon default of Bidder and within 30 calendar days after receipt by Bidder and Surety of written notice of default from Owner, which notice will be given with reasonable promptness, identifying this Bond and the Project and including a statement of the amount due.

5. Surety waives notice of any and all defenses based on or arising out of any time extension to issue Notice of Award agreed to in writing by Owner and Bidder, provided that the total time for issuing Notice of Award including extensions shall not in the aggregate exceed 120 days from the Bid due date without Surety's written consent.

6. No suit or action shall be commenced under this Bond prior to 30 calendar days after the notice of default required in Paragraph 4 above is received by Bidder and Surety and in no case later than one year after the Bid due date.

7. Any suit or action under this Bond shall be commenced only in a court of competent jurisdiction located in the state in which the Project is located.

8. Notices required hereunder shall be in writing and sent to Bidder and Surety at their respective addresses shown on the face of this Bond. Such notices may be sent by personal delivery, commercial courier, or by United States Registered or Certified Mail, return receipt requested, postage pre-paid, and shall be deemed to be effective upon receipt by the party concerned.

9. Surety shall cause to be attached to this Bond a current and effective Power of Attorney evidencing the authority of the officer, agent, or representative who executed this Bond on behalf of Surety to execute, seal, and deliver such Bond and bind the Surety thereby.

10. This Bond is intended to conform to all applicable statutory requirements. Any applicable requirement of any applicable statute that has been omitted from this Bond shall be deemed to be included herein as if set forth at length. If any provision of this Bond conflicts with any applicable statute, then the provision of said statute shall govern and the remainder of this Bond that is not in conflict therewith shall continue in full force and effect.

11. The term “Bid” as used herein includes a Bid, offer, or proposal as applicable.

SECTION 00431
TABULATION OF SUBCONTRACTORS AND SUPPLIERS

The Undersigned states that the following is a full and complete list of the proposed subcontractors and suppliers on this Project and the class of work to be performed by each and that such list will not be added to nor altered without written consent of the Owner through the Engineer.

| **SUBCONTRACTOR OR SUPPLIER AND ADDRESS** | **CLASS OF WORK OR MATERIAL** |
|---|---|
| (1) _____ | _____ |
| (2) _____ | _____ |
| (3) _____ | _____ |
| (4) _____ | _____ |
| (5) _____ | _____ |
| (6) _____ | _____ |
| (7) _____ | _____ |

(Add additional pages as needed.)

BIDDER:_____

By:_____

Name:_____

Title:_____

Date:_____

SECTION 00440
FLORIDA TRENCH SAFETY ACT CERTIFICATION

The Bidder acknowledges that included in the various items of the proposal and in the Total Bid Price are costs for complying with the most current version of the Florida Trench Safety Act (90-96, Laws of Florida). The Bidder further identifies the costs to be summarized below:

| | Cost |
|---|---|
| 1. Trench Safety Act Compliance | $ _____ |
| 2. Special Shoring | $ _____ |

Identify method of compliance for Item #1: _____

_____

Identify or attach a copy of Special Shoring Requirements for Item #2: _____

_____

The undersigned certifies that he/she is the Contractor who will perform the trench excavation for this project and hereby gives written assurance that Contractor will comply with the applicable trench safety standards specifically set forth in Florida's Trench Safety Act (90-96, Laws of Florida).

BIDDER: _____

By: _____

Name: _____

Title: _____

Sworn to and subscribed before me this_____day of_____, 20___.

_____
Notary Public

My Commission Expires: _____

# SECTION 00451
# QUALIFICATIONS STATEMENT

**THE INFORMATION SUPPLIED IN THIS DOCUMENT IS CONFIDENTIAL TO THE EXTENT PERMITTED BY LAWS AND REGULATIONS**

**1. SUBMITTED BY:**

Official Name of Firm: _____

Address: _____

_____

_____

**2. SUBMITTED TO:** _____

**3. SUBMITTED FOR:** _____

Owner: _____

Project Name: _____

_____

_____

_____

**TYPE OF WORK:** _____

_____

_____

**4. CONTRACTOR'S CONTACT INFORMATION**

Contact Person: _____

Title: _____

Phone: _____

Email: _____


**Copyright © 2013 National Society of Professional Engineers, American Council of Engineering Companies, and American Society of Civil Engineers. All rights reserved.**

**5. AFFILIATED COMPANIES:**

Name: _____

Address: _____

_____

_____

**6. TYPE OF ORGANIZATION:**

☐ SOLE PROPRIETORSHIP

Name of Owner: _____

Doing Business As: _____

Date of Organization: _____

☐ PARTNERSHIP

Date of Organization: _____

Type of Partnership: _____

Name of General Partner(s): _____

_____

_____

☐ CORPORATION

State of Organization: _____

Date of Organization: _____

Executive Officers:

- President: _____

- Vice President(s): _____

_____

_____

- Treasurer: _____

- Secretary: _____


Copyright © 2013 National Society of Professional Engineers, American Council of Engineering Companies, and American Society of Civil Engineers. All rights reserved.

☐ LIMITED LIABILITY COMPANY

State of Organization: _____

Date of Organization: _____

Members: _____

_____

_____

_____

☐ JOINT VENTURE

Sate of Organization: _____

Date of Organization: _____

Form of Organization: _____

Joint Venture Managing Partner

- Name: _____

- Address: _____

_____

_____

Joint Venture Managing Partner

- Name: _____

- Address: _____

_____

Joint Venture Managing Partner

- Name: _____

- Address: _____

_____

## 7. LICENSING


Copyright © 2013 National Society of Professional Engineers, American Council of Engineering Companies, and American Society of Civil Engineers. All rights reserved.

Jurisdiction: _____

Type of License: _____

License Number: _____

Jurisdiction: _____

Type of License: _____

License Number: _____

**8. CERTIFICATIONS** CERTIFIED BY:

Disadvantage Business Enterprise: _____

Minority Business Enterprise: _____

Woman Owned Enterprise: _____

Small Business Enterprise: _____

Other (_____): _____

**9. BONDING INFORMATION**

Bonding Company: _____

Address: _____

_____

Bonding Agent: _____

Address: _____

_____

_____

Contact Name: _____

Phone: _____

Aggregate Bonding Capacity: _____

Available Bonding Capacity as of date of this submittal: _____

**10. FINANCIAL INFORMATION**


**Copyright © 2013 National Society of Professional Engineers, American Council of Engineering Companies, and American Society of Civil Engineers. All rights reserved.**

Financial Institution: _____

Address: _____

_____

Account Manager: _____

Phone: _____

***INCLUDE AS AN ATTACHMENT AN AUDITED BALANCE SHEET FOR EACH OF THE LAST 3 YEARS***

## 11. CONSTRUCTION EXPERIENCE:

Current Experience:

List on **Schedule A** all uncompleted projects currently under contract (If Joint Venture list each participant's projects separately).

Previous Experience:

List on **Schedule B** all projects completed within the last 5 Years (If Joint Venture list each participant's projects separately).

Has firm listed in Section 1 ever failed to complete a construction contract awarded to it?

☐ YES ☐ NO

If YES, attach as an Attachment details including Project Owner's contact information.

Has any Corporate Officer, Partner, Joint Venture participant or Proprietor ever failed to complete a construction contract awarded to them in their name or when acting as a principal of another entity?

☐ YES ☐ NO

If YES, attach as an Attachment details including Project Owner's contact information.

Are there any judgments, claims, disputes or litigation pending or outstanding involving the firm listed in Section 1 or any of its officers (or any of its partners if a partnership or any of the individual entities if a joint venture)?

☐ YES ☐ NO

If YES, attach as an Attachment details including Project Owner's contact information.

## 12. SAFETY PROGRAM:


Copyright © 2013 National Society of Professional Engineers, American Council of Engineering Companies, and American Society of Civil Engineers. All rights reserved.

Name of Contractor's Safety Officer:_____

Include the following as attachments:

Provide as an Attachment Contractor's (and Contractor's proposed Subcontractors and Suppliers furnishing or performing Work having a value in excess of 10 percent of the total amount of the Bid) OSHA No. 500- Log & Summary of Occupational Injuries & Illnesses for the past 5 years.

Provide as an Attachment Contractor's (and Contractor's proposed Subcontractors and Suppliers furnishing or performing Work having a value in excess of 10 percent of the total amount of the Bid) list of all OSHA Citations & Notifications of Penalty (monetary or other) received within the last 5 years (indicate disposition as applicable) - IF NONE SO STATE.

Provide as an Attachment Contractor's (and Contractor's proposed Subcontractors and Suppliers furnishing or performing Work having a value in excess of 10 percent of the total amount of the Bid) list of all safety citations or violations under any state all received within the last 5 years (indicate disposition as applicable) - IF NONE SO STATE.

Provide the following for the firm listed in Section V (and for each proposed Subcontractor furnishing or performing Work having a value in excess of 10 percent of the total amount of the Bid) the following (attach additional sheets as necessary):

Workers' compensation Experience Modification Rate (EMR) for the last 5 years:

| | | | |
|---|---|---|---|
| YEAR | _____ | EMR | _____ |
| YEAR | _____ | EMR | _____ |
| YEAR | _____ | EMR | _____ |
| YEAR | _____ | EMR | _____ |
| YEAR | _____ | EMR | _____ |

Total Recordable Frequency Rate (TRFR) for the last 5 years:

| | | | |
|---|---|---|---|
| YEAR | _____ | TRFR | _____ |
| YEAR | _____ | TRFR | _____ |
| YEAR | _____ | TRFR | _____ |
| YEAR | _____ | TRFR | _____ |
| YEAR | _____ | TRFR | _____ |

Total number of man-hours worked for the last 5 Years:

| | | | |
|---|---|---|---|
| YEAR | _____ | TOTAL NUMBER OF MAN-HOURS | _____ |
| YEAR | _____ | TOTAL NUMBER OF MAN-HOURS | _____ |
| YEAR | _____ | TOTAL NUMBER OF MAN-HOURS | _____ |
| YEAR | _____ | TOTAL NUMBER OF MAN-HOURS | _____ |


**Copyright © 2013 National Society of Professional Engineers, American Council of Engineering Companies, and American Society of Civil Engineers. All rights reserved.**

YEAR _____ TOTAL NUMBER OF MAN-HOURS _____

Provide Contractor's (and Contractor's proposed Subcontractors and Suppliers furnishing or performing Work having a value in excess of 10 percent of the total amount of the Bid) Days Away From Work, Days of Restricted Work Activity or Job Transfer (DART) incidence rate for the particular industry or type of Work to be performed by Contractor and each of Contractor's proposed Subcontractors and Suppliers) for the last 5 years:

| | | | |
|---|---|---|---|
| YEAR | _____ | DART | _____ |
| YEAR | _____ | DART | _____ |
| YEAR | _____ | DART | _____ |
| YEAR | _____ | DART | _____ |
| YEAR | _____ | DART | _____ |

**13. EQUIPMENT:**

MAJOR EQUIPMENT:

List on **Schedule C** all pieces of major equipment available for use on Owner's Project.

**14. DECLARATION OF WORK COMPONENTS SCHEDULE**

Minimum of 25% of work to be completed by bidder identified on Signature of Bidder Form. (Mobilization, administration, overhead, general conditions and profit may not be included as minimum work components).

Work Components that make up the above minimum are as follows:

_____

_____

_____

_____

_____


**Copyright © 2013 National Society of Professional Engineers, American Council of Engineering Companies, and American Society of Civil Engineers. All rights reserved.**

I HEREBY CERTIFY THAT THE INFORMATION SUBMITTED HEREWITH, INCLUDING ANY ATTACHMENTS, IS TRUE TO THE BEST OF MY KNOWLEDGE AND BELIEF.

NAME OF ORGANIZATION: _____

BY: _____

TITLE: _____

DATED: _____

NOTARY ATTEST:

SUBSCRIBED AND SWORN TO BEFORE ME

THIS _____ DAY OF _____, 20___

NOTARY PUBLIC - STATE OF _____

MY COMMISSION EXPIRES: _____

REQUIRED ATTACHMENTS

1. Schedule A (Current Experience).
2. Schedule B (Previous Experience).
3. Schedule C (Major Equipment).
4. Audited balance sheet for each of the last 3 years for firm named in Section 1.
5. Evidence of authority for individuals listed in Section 7 to bind organization to an agreement.
6. Resumes of officers and key individuals (including Safety Officer) of firm named in Section 1.
7. Required safety program submittals listed in Section 13.
8. Additional items as pertinent.


**Copyright © 2013 National Society of Professional Engineers, American Council of Engineering Companies, and American Society of Civil Engineers. All rights reserved.**

SCHEDULE A

| wner's Contact Person | Design Engineer | Contract Date | Type of Work | Status | Cost of Work |
|---|---|---|---|---|---|
| ame:<br>ddress:<br>elephone: | Name:<br>Company:<br>Telephone: | | | | |
| ame:<br>ddress:<br>elephone: | Name:<br>Company:<br>Telephone: | | | | |
| ame:<br>ddress:<br>elephone: | Name:<br>Company:<br>Telephone: | | | | |
| ame:<br>ddress:<br>elephone: | Name:<br>Company:<br>Telephone: | | | | |
| ame:<br>ddress:<br>elephone: | Name:<br>Company:<br>Telephone: | | | | |
| ame:<br>ddress:<br>elephone: | Name:<br>Company:<br>Telephone: | | | | |
| ame:<br>ddress:<br>elephone: | Name:<br>Company:<br>Telephone: | | | | |

## SCHEDULE B

PREVIOUS EXPERIENCE (Include ALL Projects Completed within last 5 years)

| Project Name | Owner's Contact Person | Design Engineer | Contract Date | Type of Work | Status | Cost of Work |
|---|---|---|---|---|---|---|
| | Name:<br>Address:<br>Telephone: | Name:<br>Company:<br>Telephone: | | | | |
| | Name:<br>Address:<br>Telephone: | Name:<br>Company:<br>Telephone: | | | | |
| | Name:<br>Address:<br>Telephone: | Name:<br>Company:<br>Telephone: | | | | |
| | Name:<br>Address:<br>Telephone: | Name:<br>Company:<br>Telephone: | | | | |
| | Name:<br>Address:<br>Telephone: | Name:<br>Company:<br>Telephone: | | | | |
| | Name:<br>Address:<br>Telephone: | Name:<br>Company:<br>Telephone: | | | | |
| | Name:<br>Address:<br>Telephone: | Name:<br>Company:<br>Telephone: | | | | |


**Copyright © 2013 National Society of Professional Engineers, American Council of Engineering Companies, and American Society of Civil Engineers. All rights reserved.**

## SCHEDULE B

PREVIOUS EXPERIENCE (Include ALL Projects Completed within last 5 years)

| Project Name | Owner's Contact Person | Design Engineer | Contract Date | Type of Work | Status | Cost of Work |
|---|---|---|---|---|---|---|
| | Name:<br>Address:<br>Telephone: | Name:<br>Company:<br>Telephone: | | | | |
| | Name:<br>Address:<br>Telephone: | Name:<br>Company:<br>Telephone: | | | | |
| | Name:<br>Address:<br>Telephone: | Name:<br>Company:<br>Telephone: | | | | |
| | Name:<br>Address:<br>Telephone: | Name:<br>Company:<br>Telephone: | | | | |
| | Name:<br>Address:<br>Telephone: | Name:<br>Company:<br>Telephone: | | | | |
| | Name:<br>Address:<br>Telephone: | Name:<br>Company:<br>Telephone: | | | | |
| | Name:<br>Address:<br>Telephone: | Name:<br>Company:<br>Telephone: | | | | |


**Copyright © 2013 National Society of Professional Engineers, American Council of Engineering Companies, and American Society of Civil Engineers. All rights reserved.**

SCHEDULE C - LIST OF MAJOR EQUIPMENT AVAILABLE

| ITEM | PURCHASE DATE | CONDITION | ACQUIRED VALUE |
|---|---|---|---|
| | | | |
| | | | |
| | | | |
| | | | |
| | | | |
| | | | |
| | | | |
| | | | |
| | | | |
| | | | |
| | | | |
| | | | |
| | | | |
| | | | |
| | | | |
| | | | |
| | | | |
| | | | |
| | | | |
| | | | |

**EJCDC® 00451, Qualifications Statement.**
**Copyright © 2013 National Society of Professional Engineers, American Council of Engineering Companies, and American Society of Civil Engineers. All rights reserved.**

SECTION 00452
BIDDER'S STATEMENT OF DISPUTES, LITIGATION,
ARBITRATION, AND SURETY COMPLETION
LAST THREE (3) YEARS

| PROJECT | NAME AND ADDRESS OF OWNER OR ENGINEER | NAME AND PHONE OF OWNER OR ENGINEER REPRESENTATIVE | DATE OF CONTRACT | AMOUNT | STATUS |
|---|---|---|---|---|---|

(Signed)_____

SECTION 00453

NONCOLLUSION AFFIDAVIT

TO: The_____, herein called the "Owner."

Pursuant to bidding requirements for the work titled "**SCADA System Upgrade, Main Water Treatment Plant**," the enclosed contract documents shall be provided to the Owner.

State of _____

County of _____

_____, being first duly
(Officer's Name)

sworn, deposes, and says that:

A. He\She is_____(officer's title) of_____(company name), the Bidder that has submitted the attached bid;

B. He\She is fully informed respecting the preparation and contents of the attached bid and of all pertinent circumstances respecting such bid;

C. Such bid is genuine and is not a collusive or sham bid;

D. Neither the said Bidder nor any of its officers, partners, owners, agents, representatives, employees, or parties in interest, including this affiant, has in any way colluded, conspired, connived, or agreed, directly or indirectly with any other Bidder, firm, or person to submit a collusive or sham bid in connection with the contract for which the attached bid has been submitted or to refrain from bidding in connection with such contract, or has in any manner, directly or indirectly, sought by agreement or collusion or communication or conference with any other Bidder, firm, or person to fix the price or prices in the attached bid or of any other Bidder, or to fix any overhead, profit, or cost element of the bid price or the bid price of any other Bidder, or to secure through any collusion, conspiracy, connivance, or unlawful agreement any advantage against the _____ or any person interested in the proposed contract; and

E. The price or prices quoted in the attached bid are fair and proper and are not tainted by any collusion, conspiracy, connivance, or unlawful agreement on the part of the Bidder or any of its agents, representatives, owners, employees, or parties in interest, including this affiant.

(Signed) _____

_____

Subscribed and sworn to before me
this_____day of_____, 20_____

_____
Notary Public

My commission expires _____

SECTION 00454
DRUG-FREE WORKPLACE CERTIFICATE

I, the undersigned, in accordance with Florida Statute 287.087, hereby certify that _____
_____(Print or Type Name of Firm)

- Publishes a written statement notifying that the unlawful manufacture, distribution, dispensing, possession, or use of a controlled substance is prohibited in the workplace named above, and specifying actions that will be taken against violations of such prohibition.

- Informs employees about the dangers of drug abuse in the workplace; the firm's policy of maintaining a drug-free working environment and available drug counseling, rehabilitation, and employee assistance programs; and the penalties that may be imposed upon employees for drug-use violations.

- Gives each employee engaged in providing commodities or contractual services that are under bid or proposal a copy of the statement specified above.

- Notifies the employees that as a condition of working on the commodities or contractual services under bid or proposal, the employee will abide by the terms of the statement and will notify the employer of any conviction of or plea of guilty or nolo contendere to any violation of Chapter 1893 or any controlled substance law of the State of Florida or the United States for a violation occurring in the workplace, no later than 5 days after such conviction, and requires employees to sign copies of such written statement to acknowledge their receipt.

- Imposes a sanction on or requires the satisfactory participation in a drug-abuse assistance or rehabilitation program, if such is available in the employee's community, by any employee who is so convicted.

- Makes a good faith effort to continue to maintain a drug-free workplace through the implementation of the drug-free workplace program.

"As a person authorized to sign this statement, I certify that the business, firm, or corporation named above complies fully with the requirements set forth herein."

_____
Authorized Signature

_____
Date Signed

State of: _____

County of: _____

Sworn to and subscribed before me this day of_____, 20___

Personally known or Produced Identification _____
(Specify Type of Identification)

_____
Signature of Notary

My Commission Expires_____

SECTION 00455
SWORN STATEMENT UNDER SECTION 287.133(3)(a),
FLORIDA STATUTES, ON PUBLIC ENTITY CRIMES

(To be signed in the presence of a notary public or other officer authorized to administer oaths.)

STATE OF _____

COUNTY OF _____

Before me, the undersigned authority, personally appeared _____, who, being by me first duly sworn, made the following statement:

1. The business address of _____
(firm name of Bidder/Contractor)

is _____.

2. My relationship to _____
(firm name of Bidder/Contractor)

is _____.
(relationship such as sole proprietor, partner, president, vice president)

3. I understand that a "public entity crime" as defined in Section 287.133 of the Florida Statutes includes a violation of any state or federal law by a person with respect to and directly related to the transaction of business with any public entity in Florida or with an agency or political subdivision of any other state or with the United States, including, but not limited to, any bid or contract for goods or services to be provided to any public entity or such an agency or political subdivision and involving antitrust, fraud, theft, bribery, collusion, racketeering, conspiracy, or material misrepresentation.

4. I understand that "convicted" or "conviction" is defined by the statute to mean a finding of guilt or a conviction of a public entity crime, with or without adjudication of guilt, in any federal or state trial court of record relating to charges brought by indictment or information after July 1, 1989, as a result of a jury verdict, nonjury trial, or entry of a plea of guilty or nolo contendere.

5. I understand that "affiliate" is defined by the statute to mean (1) a predecessor or successor of a person or a corporation convicted of a public entity crime; or (2) an entity under the control of any natural person who is active in the management of the entity and who has been convicted of a public entity crime; or (3) those officers, directors, executives, partners, shareholders, employees, members, and agents who are active in the management of an affiliate; or (4) a person or corporation who knowingly entered into a joint venture with a person who has been convicted of a public entity crime in Florida during the preceding 36 months.

6. Neither the Bidder/Contractor nor any officer, director, executive, partner, shareholder, employee, member or agent who is active in the management of the Bidder/Contractor, nor any affiliate of the Bidder/Contractor, has been convicted of public entity crime subsequent to July 1, 1989.

(Draw a line through Paragraph 6 if Paragraph 7 below applies.)

7. There has been a conviction of a public entity crime by the Bidder/Contractor, or an officer, director, executive, partner, shareholder, employee, member or agent of the Bidder/Contractor who is active in the management of the Bidder/Contractor or an affiliate of the Bidder/Contractor. A determination has been made pursuant to Section 287.133(3) by order of the Division of Administrative Hearings that it is not in the public interest for the name of the convicted person or affiliate to appear on the convicted vendor list. The name of the convicted person or affiliate is _____.

A copy of the order of the Division of Administrative Hearings is attached to this statement.

(Draw a line through Paragraph 7 if Paragraph 6 above applies.)

_____
(Signature)

Sworn to and subscribed to before me in the State and County first mentioned above on the _____ day of _____, 20____.

_____
Notary Public

(affix seal)

_____
My commission expires

SECTION 00456
SCRUTINIZED COMPANIES CERTIFICATION FORM

By execution below, I, _____, on behalf of _____ (hereinafter, the "Contractor"), hereby swear or affirm to the following certifications:

The following certifications apply to all procurements:

1. The Contractor has reviewed section 215.4725, Florida Statutes, section 215.473, Florida Statutes and section 287.135, Florida Statutes, and understands the same.
2. The Contractor is not on the Scrutinized Companies that Boycott Israel List nor is the Contractor engaged in a boycott of Israel.
3. If awarded a contract, the Contractor agrees to require these certifications for applicable subcontracts entered into for the performance of work/services under this procurement.
4. If awarded a contract, the Contractor agrees that the certifications in this section shall be effective and relied upon by the City for the entire term of the contract, including any and all renewals.

If the contract awarded hereunder is for one million dollars or more, the following additional certifications apply:

1. The Contractor is not on the Scrutinized Companies with Activities in Sudan List.
2. The Contractor is not on the Scrutinized Companies with Activities in the Iran Petroleum Energy Sector List.
3. The Contractor is not engaged in business operations in Cuba or Syria.
5. If awarded a contract, the Contractor agrees to require these certifications for applicable subcontracts entered into for the performance of work/services under this procurement.
6. If awarded a contract, the Contractor agrees that the certifications in this section shall be effective and relied upon by the City for the entire term of the contract, including any and all renewals.

**CONTRACTOR:**
By:_____
Name: _____
Title: _____
Date: _____

STATE OF FLORIDA
COUNTY OF _____

The foregoing instrument was sworn to (or affirmed) and subscribed before this _____ day of _____, 20_____, by _____, who is the _____ of _____, who is personally known to me or who has produced_____ as identification.

NOTARY PUBLIC
Printed Name of Notary_____
My Commission expires: _____

# PART 2




# CONTRACT FORMS

# NOTICE OF AWARD

Date of Issuance:

| | | | |
|---|---|---|---|
| Owner: | Village of Palm Springs | Owner's Task Order No.: | 227 |
| Engineer: | Eckler Engineering, Inc. | Engineer's Project No.: | 400-077.01 |
| Project: | SCADA System Upgrade<br>Main Water Treatment Plant | Contract Name: | |

Bidder:

Bidder's Address:

**TO BIDDER:**

You are notified that Owner has accepted your Bid dated [_____] for the above Contract, and that you are the Successful Bidder and are awarded a Contract for:

_____ .

*[describe Work, alternates, or sections of Work awarded]*

The Contract Price of the awarded Contract is: $_____ *[note if subject to unit prices, or cost-plus]*

[ ] unexecuted counterparts of the Agreement accompany this Notice of Award, and one copy of the Contract Documents accompanies this Notice of Award, or has been transmitted or made available to Bidder electronically. *[revise if multiple copies accompany the Notice of Award]*

☐ a set of the Drawings will be delivered separately from the other Contract Documents.

You must comply with the following conditions precedent within 15 days of the date of this Notice of Award:

1. Deliver to Owner [____]counterparts of the Agreement, fully executed by Bidder.
2. Deliver with the executed Agreement(s) the Contract security *[e.g., performance and payment bonds]* and insurance documentation as specified in the Instructions to Bidders and General Conditions, Articles 2 and 6.
3. Other conditions precedent (if any):

Failure to comply with these conditions within the time specified will entitle Owner to consider you in default, annul this Notice of Award, and declare your Bid security forfeited.

Within ten days after you comply with the above conditions, Owner will return to you one fully executed counterpart of the Agreement, together with any additional copies of the Contract Documents as indicated in Paragraph 2.02 of the General Conditions.

Owner**:**

Authorized Signature

By:

Title:

Copy: Engineer

# SECTION 00520
# AGREEMENT
# BETWEEN OWNER AND CONTRACTOR
# FOR CONSTRUCTION CONTRACT (STIPULATED PRICE)

THIS AGREEMENT is by and between Village of Palm Springs ("Owner") and

("Contractor").

Owner and Contractor hereby agree as follows:

**ARTICLE 1 – WORK**

1.01 Contractor shall complete all Work as specified or indicated in the Contract Documents. The Work is generally described as follows: The Project consists of furnishing all labor, equipment and material for the SCADA System Improvements/Upgrade as described by the Drawings and Specifications. Generally, the work includes minor demolition, new control panels, modification to existing control panels, new computers/network equipment, software upgrades, electrical, site restoration and all other incidentals as indicated by the drawings and specifications or as required to properly complete the project as planned.

**ARTICLE 2 – THE PROJECT**

2.01 The Project, of which the Work under the Contract Documents is a part, is generally described as follows: **SCADA System Upgrade – Main Water Treatment Plant.**

**ARTICLE 3 – ENGINEER**

3.01 The part of the Project that pertains to the Work has been designed by Eckler Engineering, Inc.

3.02 The Owner has retained Eckler Engineering, Inc. ("Engineer") to act as Owner's representative, assume all duties and responsibilities, and have the rights and authority assigned to Engineer in the Contract Documents in connection with the completion of the Work in accordance with the Contract Documents.

**ARTICLE 4 – CONTRACT TIMES**

4.01 *Time of the Essence*

A. All time limits for Milestones, if any, Substantial Completion, and completion and readiness for final payment as stated in the Contract Documents are of the essence of the Contract.

4.02 *Contract Times: Days*

A. The Work will be substantially completed within 270 days after the date when the Contract Times commence to run as provided in Paragraph 4.01 of the General Conditions, and completed and ready for final payment in accordance with Paragraph 15.06 of the General Conditions within 300 days after the date when the Contract Times commence to run.

4.03 *Liquidated Damages*

A. Contractor and Owner recognize that time is of the essence as stated in Paragraph 4.01 above and that Owner will suffer financial and other losses if the Work is not completed

and Milestones not achieved within the times specified in Paragraph 4.02 above, plus any extensions thereof allowed in accordance with the Contract. The parties also recognize the delays, expense, and difficulties involved in proving in a legal or arbitration proceeding the actual loss suffered by Owner if the Work is not completed on time. Accordingly, instead of requiring any such proof, Owner and Contractor agree that as liquidated damages for delay (but not as a penalty):

1. Substantial Completion: Contractor shall pay Owner $500.00 for each day that expires after the time (as duly adjusted pursuant to the Contract) specified in Paragraph 4.02.A above for Substantial Completion until the Work is substantially complete.
2. Completion of Remaining Work: After Substantial Completion, if Contractor shall neglect, refuse, or fail to complete the remaining Work within the Contract Times (as duly adjusted pursuant to the Contract) for completion and readiness for final payment, Contractor shall pay Owner $500.00 for each day that expires after such time until the Work is completed and ready for final payment.
3. Liquidated damages for failing to timely attain Substantial Completion and final completion are not additive and will not be imposed concurrently.

4.04 *Special Damages*

A. In addition to the amount provided for liquidated damages, Contractor shall reimburse Owner (1) for any fines or penalties imposed on Owner as a direct result of the Contractor's failure to attain Substantial Completion according to the Contract Times.

**ARTICLE 5 – CONTRACT PRICE**

5.01 Owner shall pay Contractor for completion of the Work in accordance with the Contract Documents the amounts that follow, subject to adjustment under the Contract:

A. For all Work other than Unit Price Work, a lump sum of: $_____.

All specific cash allowances are included in the above price in accordance with Paragraph 13.02 of the General Conditions.

B. For all Unit Price Work, an amount equal to the sum of the extended prices (established for each separately identified item of Unit Price Work by multiplying the unit price times the actual quantity of that item):

| **Unit Price Work** | | | | | |
|---|---|---|---|---|---|
| **Item No.** | **Description** | **Unit** | **Estimated Quantity** | **Unit Price** | **Extended Price** |
| | Not Applicable | | | | |
| | | | | | |
| | | | | | |
| | | | | | |
| | | | | | |
| Total of all Extended Prices for Unit Price Work (subject to final adjustment based on actual quantities) | | | | | $ N/A |

The extended prices for Unit Price Work set forth as of the Effective Date of the Contract are based on estimated quantities. As provided in Paragraph 13.03 of the General Conditions, estimated quantities are not guaranteed, and determinations of actual quantities and classifications are to be made by Engineer.

C. Total of Lump Sum Amount and Unit Price Work (subject to final Unit Price adjustment) $_____.

D. For all Work, at the prices stated in Contractor's Bid, attached hereto as an exhibit.

**ARTICLE 6 – PAYMENT PROCEDURES**

6.01 *Submittal and Processing of Payments*

A. Contractor shall submit Applications for Payment in accordance with Article 15 of the General Conditions. Applications for Payment will be processed by Engineer as provided in the General Conditions.

6.02 *Progress Payments; Retainage*

A. Owner shall make progress payments on account of the Contract Price on the basis of Contractor's Applications for Payment on or about the 20th day of each month during performance of the Work as provided in Paragraph 6.02.A.1 below, provided that such Applications for Payment have been submitted in a timely manner and otherwise meet the requirements of the Contract. All such payments will be measured by the Schedule of Values established as provided in the General Conditions (and in the case of Unit Price Work based on the number of units completed) or, in the event there is no Schedule of Values, as provided elsewhere in the Contract.

1. Prior to Substantial Completion, progress payments will be made in an amount equal to the percentage indicated below but, in each case, less the aggregate of payments previously made and less such amounts as Owner may withhold, including but not limited to liquidated damages, in accordance with the Contract

a. 90 percent of Work completed (with the balance being retainage). If the Work has been 50 percent completed as determined by Engineer, and if the character and progress of the Work have been satisfactory to Owner and Engineer, then as long as the character and progress of the Work remain satisfactory to Owner and Engineer, the retainage will be reduced in accordance with Florida Statute 218.735; and

b. 90 percent of cost of materials and equipment not incorporated in the Work (with the balance being retainage).

B. Upon Substantial Completion, Owner shall pay an amount sufficient to increase total payments to Contractor to 100 percent of the Work completed, less such amounts set off by Owner pursuant to Paragraph 15.01.E of the General Conditions, and less 200 percent of Engineer's estimate of the value of Work to be completed or corrected as shown on the punch list of items to be completed or corrected prior to final payment.

6.03 *Final Payment*

A. Upon final completion and acceptance of the Work in accordance with Paragraph 15.06 of the General Conditions, Owner shall pay the remainder of the Contract Price as recommended by Engineer as provided in said Paragraph 15.06.

**ARTICLE 7 – INTEREST**

7.01 All amounts not paid when due shall bear interest at the rate of 0 percent per annum.

**ARTICLE 8 – CONTRACTOR'S REPRESENTATIONS**

8.01 In order to induce Owner to enter into this Contract, Contractor makes the following representations:

A. Contractor has examined and carefully studied the Contract Documents, and any data and reference items identified in the Contract Documents.

B. Contractor has visited the Site, conducted a thorough, alert visual examination of the Site and adjacent areas, and become familiar with and is satisfied as to the general, local, and Site conditions that may affect cost, progress, and performance of the Work.

C. Contractor is familiar with and is satisfied as to all Laws and Regulations that may affect cost, progress, and performance of the Work.

D. Contractor has carefully studied all: (1) reports of explorations and tests of subsurface conditions at or adjacent to the Site and all drawings of physical conditions relating to existing surface or subsurface structures at the Site that have been identified in the Supplementary Conditions, especially with respect to Technical Data in such reports and drawings, and (2) reports and drawings relating to Hazardous Environmental Conditions, if any, at or adjacent to the Site that have been identified in the Supplementary Conditions, especially with respect to Technical Data in such reports and drawings.

E. Contractor has considered the information known to Contractor itself; information commonly known to contractors doing business in the locality of the Site; information and observations obtained from visits to the Site; the Contract Documents; and the Site-related reports and drawings identified in the Contract Documents, with respect to the effect of such information, observations, and documents on (1) the cost, progress, and performance of the Work; (2) the means, methods, techniques, sequences, and procedures of construction to be employed by Contractor; and (3) Contractor's safety precautions and programs.

F. Based on the information and observations referred to in the preceding paragraph, Contractor agrees that no further examinations, investigations, explorations, tests, studies, or data are necessary for the performance of the Work at the Contract Price, within the Contract Times, and in accordance with the other terms and conditions of the Contract.

G. Contractor is aware of the general nature of work to be performed by Owner and others at the Site that relates to the Work as indicated in the Contract Documents.

H. Contractor has given Engineer written notice of all conflicts, errors, ambiguities, or discrepancies that Contractor has discovered in the Contract Documents, and the written resolution thereof by Engineer is acceptable to Contractor.

I. The Contract Documents are generally sufficient to indicate and convey understanding of all terms and conditions for performance and furnishing of the Work.

J. Contractor's entry into this Contract constitutes an incontrovertible representation by Contractor that without exception all prices in the Agreement are premised upon performing and furnishing the Work required by the Contract Documents.

**ARTICLE 9 – CONTRACT DOCUMENTS**

9.01 *Contents*

A. The Contract Documents consist of the following:

1. This Agreement (pages 1 to ___, inclusive).
2. Performance bond (pages ___ to ___, inclusive).
3. Payment bond (pages ___ to ___, inclusive).
4. Other bonds.
    a. ___ (pages ___ to ___, inclusive).
    b. ___ (pages ___ to ___, inclusive).
    c. ___ (pages ___ to ___, inclusive).
5. General Conditions (pages ___ to ___, inclusive).
6. Supplementary Conditions (pages ___ to ___, inclusive).
7. Specifications as listed in the table of contents of the Project Manual.
8. Drawings (not attached but incorporated by reference) consisting of ___ sheets with each sheet bearing the following general title: ___ **[or]** the Drawings listed on the attached sheet index.
9. Addenda (numbers ___ to ___, inclusive).
10. Exhibits to this Agreement (enumerated as follows):
    a. Contractor's Bid (pages ___ to ___, inclusive).
11. The following which may be delivered or issued on or after the Effective Date of the Contract and are not attached hereto:
    a. Notice to Proceed.
    b. Work Change Directives.
    c. Change Orders.
    d. Field Orders.

B. The documents listed in Paragraph 9.01.A are attached to this Agreement (except as expressly noted otherwise above).

C. There are no Contract Documents other than those listed above in this Article 9.

D. The Contract Documents may only be amended, modified, or supplemented as provided in the General Conditions.

**ARTICLE 10 – MISCELLANEOUS**

10.01 *Terms*

A. Terms used in this Agreement will have the meanings stated in the General Conditions and the Supplementary Conditions.

10.02 *Assignment of Contract*

A. Unless expressly agreed to elsewhere in the Contract, no assignment by a party hereto of any rights under or interests in the Contract will be binding on another party hereto without the written consent of the party sought to be bound; and, specifically but without limitation, money that may become due and money that is due may not be assigned without such consent (except to the extent that the effect of this restriction may be limited by law), and unless specifically stated to the contrary in any written consent to an assignment, no assignment will release or discharge the assignor from any duty or responsibility under the Contract Documents.

10.03 *Successors and Assigns*

A. Owner and Contractor each binds itself, its successors, assigns, and legal representatives to the other party hereto, its successors, assigns, and legal representatives in respect to all covenants, agreements, and obligations contained in the Contract Documents.

10.04 *Severability*

A. Any provision or part of the Contract Documents held to be void or unenforceable under any Law or Regulation shall be deemed stricken, and all remaining provisions shall continue to be valid and binding upon Owner and Contractor, who agree that the Contract Documents shall be reformed to replace such stricken provision or part thereof with a valid and enforceable provision that comes as close as possible to expressing the intention of the stricken provision.

10.05 *Contractor's Certifications*

A. Contractor certifies that it has not engaged in corrupt, fraudulent, collusive, or coercive practices in competing for or in executing the Contract. For the purposes of this Paragraph 10.05:

1. "corrupt practice" means the offering, giving, receiving, or soliciting of any thing of value likely to influence the action of a public official in the bidding process or in the Contract execution;

2. "fraudulent practice" means an intentional misrepresentation of facts made (a) to influence the bidding process or the execution of the Contract to the detriment of Owner, (b) to establish Bid or Contract prices at artificial non-competitive levels, or (c) to deprive Owner of the benefits of free and open competition;

3. "collusive practice" means a scheme or arrangement between two or more Bidders, with or without the knowledge of Owner, a purpose of which is to establish Bid prices at artificial, non-competitive levels; and

4. "coercive practice" means harming or threatening to harm, directly or indirectly, persons or their property to influence their participation in the bidding process or affect the execution of the Contract.

10.06 *Indemnity*

A. The parties recognize that the CONTRACTOR is an independent contractor. The CONTRACTOR agrees to assume liability for and indemnify, hold harmless, and defend the VILLAGE, its council members, mayor, officers, employees, agents, and attorneys of, from, and against all liability and expense, including reasonable attorney's fees, in connection with any and all claims, demands, damages, actions, causes of action, and suits in equity of whatever kind or nature, including claims for personal injury, property damage, equitable relief, or loss of use, to the extent caused by the negligence, recklessness, or intentionally

wrongful conduct of the CONTRACTOR, its agents, officers, Contractors, subcontractors, employees, or anyone else utilized by the CONTRACTOR in the performance of this Contract. The CONTRACTOR's liability hereunder shall include all attorney's fees and costs incurred by the VILLAGE in the enforcement of this indemnification provision. This includes claims made by the employees of the CONTRACTOR against the VILLAGE and the CONTRACTOR hereby waives its entitlement, if any, to immunity under Section 440.11, Florida Statutes. The obligations contained in this provision shall survive termination of this Contract and shall not be limited by the amount of any insurance required to be obtained or maintained under this Contract.

B. Subject to the limitations set forth in this Section, CONTRACTOR shall assume control of the defense of any claim asserted by a third party against the VILLAGE and, in connection with such defense, shall appoint lead counsel, in each case at the CONTRACTOR's expense. The VILLAGE shall have the right, at its option, to participate in the defense of any third party claim, without relieving CONTRACTOR of any of its obligations hereunder. If the CONTRACTOR assumes control of the defense of any third party claim in accordance with this paragraph, the CONTRACTOR shall obtain the prior written consent of the VILLAGE before entering into any settlement of such claim. Notwithstanding anything to the contrary in this Section, the CONTRACTOR shall not assume or maintain control of the defense of any third party claim, but shall pay the fees of counsel retained by the VILLAGE and all expenses, including experts' fees, if (i) an adverse determination with respect to the third party claim would, in the good faith judgment of the VILLAGE, be detrimental in any material respect to the VILLAGE's reputation; (ii) the third party claim seeks an injunction or equitable relief against the VILLAGE; or (iii) the CONTRACTOR has failed or is failing to prosecute or defend vigorously the third party claim. Each party shall cooperate, and cause its agents to cooperate, in the defense or prosecution of any third party claim and shall furnish or cause to be furnished such records and information, and attend such conferences, discovery proceedings, hearings, trials, or appeals, as may be reasonably requested in connection therewith.

C. It is the specific intent of the parties hereto that the foregoing indemnification complies with Section 725.06, Florida Statutes, as amended. CONTRACTOR expressly agrees that it will not claim, and waives any claim, that this indemnification violates Section 725.06, Florida Statues. Nothing contained in the foregoing indemnification shall be construed as a waiver of any immunity or limitation of liability the VILLAGE may have under the doctrine of sovereign immunity or Section 768.28, Florida Statutes.

10.07 *Governing Law and Remedies*

A. The validity of this Agreement and of any of its terms or provisions, as well as the rights and duties of the parties hereunder, shall be governed by the laws of the State of Florida and venue for any and all disputes related to or arising from this Agreement shall be in Palm Beach County, Florida.

B. No remedy herein conferred upon any party is intended to be exclusive of any other remedy, and each and every such remedy shall be cumulative and shall be in addition to every other remedy given hereunder or now or hereafter existing at law or in equity or by statute or otherwise. No single or partial exercise by any party of any right, power, or remedy hereunder shall preclude any other or further exercise thereof.

10.08 *Office of the Inspector General*

A. Palm Beach County has established the Office of the Inspector General, which is authorized and empowered to review past, present, and proposed County programs, contracts,

transactions, accounts and records. The Inspector General (IG) has the power to subpoena witnesses, administer oaths, require the production of records, and monitor existing projects and programs. The Inspector General may, on a random basis, perform audits on all Village contracts.

10.09 *Public Records*

A. The CONTRACTOR shall comply with Florida's Public Records Laws, Chapter 119, Florida Statutes, and, if it is acting on behalf of the VILLAGE as provided under section 119.011(2), the CONTRACTOR specifically agrees to:

1. Keep and maintain public records required by the VILLAGE to perform the services under this Agreement.

2. Upon request from the VILLAGE's custodian of public records, provide the VILLAGE with a copy of the requested records or allow the records to be inspected or copied within a reasonable tie at a cost that does not exceed the cost provided in this Chapter 119, Florida Statutes, or as otherwise provided by law.

3. Ensure that said public records that are exempt or confidential and exempt from public records disclosure requirements are not disclosed except as authorized by law for the duration of the Agreement term and following completion of the Agreement, if the CONTRACTOR does not transfer the records to the VILLAGE.

4. Upon the completion of the Agreement, transfer, at no cost, to the VILLAGE all public records in possession of the CONTRACTOR or keep and maintain public records required by the VILLAGE to perform the services. If the CONTRACTOR transfers all public records to the VILLAGE upon completion of the Agreement, the CONTRACTOR shall destroy any duplicate public records that are exempt or confidential and exempt from public records disclosure requirements. If the CONTRACTOR keeps and maintains public records upon completion of the Agreement, the CONTRACTOR shall meet all applicable requirements for retaining public records. All records stored electronically must be provided to the VILLAGE, upon request from the VILLAGE's custodian of public records, in a format that is compatible with the information technology systems of the Village.

10.10 *Insurance*

A. The limits of liability for insurance required by Paragraph 6.03 of the General Conditions shall provide coverage for not less that the following amounts or greater where required by Law and Regulations:

1. Workers' Compensation, and related coverages under Paragraphs 6.03.A.1 and A.2 of the General Conditions:

| | | |
|---|---|---|
| a. | State | Statutory |
| b. | Applicable Federal | Statutory |
| c. | Employer Liability: | |
| | Bodily injury, each accident | $1,000,000 |
| | Bodily injury by disease, each employee | $500,000 |
| | Bodily injury/disease aggregate | $1,000,000 |
| | Foreign voluntary worker compensation | Statutory |

2. Contractor's Commercial General Liability under Paragraphs 6.03.B and 6.03.C of the General Conditions:

| | | |
|---|---|---|
| a. | General Aggregate | $2,000,000 |
| b. | Products – Completed Operations Aggregate | $2,000,000 |
| c. | Personal and Advertising Injury | $1,000,000 |
| d. | Each Occurrence (Bodily Injury and Property Damage) | $1,000,000 |

3. Automobile Liability under paragraph 6.03.D of the General Conditions:

| | | |
|---|---|---|
| a. | Bodily Injury: | |
| | Each Person | $500,000 |
| | Each Accident | $1,000,000 |
| b. | Property Damage: | |
| | Each Incident | $1,000,000 |

4. Umbrella of Excess Liability under paragraph 6.03.E of the General Conditions:

| | | | |
|---|---|---|---|
| a. | Excess or Umbrella Liability | | |
| | 1) | General Aggregate | $5,000,000 |
| | 2) | Each Occurrence | $1,000,000 |

5. Contractor's Pollution Liability under paragraph 6.03.F of the General Conditions:

| | | | |
|---|---|---|---|
| a. | Contractor's Pollution Liability | | |
| | 1) | General Aggregate | $2,000,000 |
| | 2) | Each Occurrence | $1,000,000 |

6. Additional Insureds include the respective officers, partners, directors, employees, agents, consultants, and subconsultants of the following firms and municipal government(s):

   a. Village of Palm Springs

10.11 *Audit By Village*

A. The CONTRACTOR shall permit the VILLAGE, or any authorized representatives of the VILLAGE, at all reasonable times, access to and the right to examine all records, books, papers or documents related to the CONTRACTOR's performance under this Agreement including, but not limited to, expenses for sub-contractors, agents or assistants, direct and indirect charges for work performed and detailed documentation for all such work performed or to be performed under this Agreement.

10.12 *Copies of Data/Documents*

A. Copies or original documents prepared by the CONTRACTOR in relation to work associated with this Agreement shall be provided to the VILLAGE. Data collected, stored, and/or provided shall be in a form acceptable to the VILLAGE and agreed upon by the VILLAGE.

10.13 *Ownership*

A. Each and every report, draft, work product, map, record, and other document reproduced, prepared, or caused to be prepared by the CONTRACTOR pursuant to or in connection with this Agreement shall be the exclusive property of the VILLAGE.

10.14 *Limitations of Liability*

A. Under no circumstances shall either party be liable to the other for any consequential, incidental, special, punitive, or any other form of indirect or non-compensatory damages.

10.15 *Enforcement Costs*

A. All parties shall be responsible for their own attorneys' fees, court costs and expenses if any legal action or other proceeding is brought for any dispute, disagreement, or issue of construction or interpretation arising hereunder whether relating to the Agreement's execution, validity, the obligations provided therein, or performance of this Agreement, or because of an alleged breach, default or misrepresentation in connection with any provisions of this Agreement.

10.16 *Copyrights and/or Patent Rights*

A. CONTRACTOR warrants that there has been no violation of copyrights and/or patent rights in the manufacturing, producing or selling of the goods, shipped or ordered, as a result of this Agreement and the CONTRACTOR agrees to hold the Village harmless from any and all liability, loss, or expense occasioned by any such violation.

10.17 *Protection of Property*

A. The CONTRACTOR shall at all times guard against damage or loss to the property of the VILLAGE or of other vendors or contractors and shall be held responsible for replacing or repairing any such loss or damage. The VILLAGE may withhold payment or make such deductions as deemed necessary to insure reimbursement or replacement for loss or damage to property through negligence of the successful CONTRACTOR or its agents. The CONTRACTOR shall be responsible to safeguard all of their property such as tools and equipment while on site. The VILLAGE will not be held responsible for any loss of CONTRACTOR property due to theft or vandalism.

10.18 *Damage to Persons or Property*

A. The responsibility for all damage to person or property arising out of or on account of Scope of Work done under this Contract shall rest upon the CONTRACTOR.

10.19 *Discrimination*

A. The CONTRACTOR warrants and represents that all of its employees are treated equally during employment without regard to race, color, religion, disability, sex, age, national origin, ancestry, political affiliation, marital status, handicap, or sexual orientation. Further, CONTRACTOR shall not discriminate or permit discrimination against any employee or an applicant for employment on the basis of race, color, sex, religion, political affiliation, natural origin, ancestry, marital status, sexual orientation or handicap.

10.20 *Construction Defects*

A. PURSUANT TO SECTION 558.005, FLORIDA STATUTES, ANY CLAIMS FOR CONSTRUCTION DEFECTS ARE NOT SUBJECT TO THE NOTICE AND CURE PROVISIONS OF CHAPTER 558, FLORIDA STATUTES.

IN WITNESS WHEREOF, Owner and Contractor have signed this Agreement.

This Agreement will be effective on _____ (which is the Effective Date of the Contract).

| VILLAGE: | CONTRACTOR: |
|---|---|
| By: _____ | By: _____ |
| Title: Mayor | Title: _____ |
| | *(Seal)* |
| Attest: _____ | Attest: _____ |
| Title: Village Clerk | Title: Notary Public |
| Approved as to Form: _____ | |
| Title: Village Attorney | |
| Address for giving notices: | Address for giving notices: |
| 226 Cypress Lane | _____ |
| Palm Springs FL, 33461 | _____ |
| _____ | _____ |
| | License No.: _____ *(where applicable)* |

# NOTICE TO PROCEED

| | | | |
|---|---|---|---|
| | Village of Palm Springs | Owner's Task Order No.: | 227 |
| Contractor: | | Contractor's Project No.: | |
| Engineer: | Eckler Engineering, Inc. | Engineer's Project No.: | 400-077.01 |
| Project: | SCADA System Upgrade<br>Main Water Treatment Plant | Contract Name: SCADA System Upgrade<br>Main Water Treatment Plant | |
| | | Effective Date of Contract: | |

**TO CONTRACTOR:**

Owner hereby notifies Contractor that the Contract Times under the above Contract will commence to run on [_____, 20__].

On that date, Contractor shall start performing its obligations under the Contract Documents. No Work shall be done at the Site prior to such date. In accordance with the Agreement, [the date of Substantial Completion is _____, and the date of readiness for final payment is_____.

Before starting any Work at the Site, Contractor must comply with the following:
*[Note any access limitations, security procedures, or other restrictions]*

Owner**:**

Authorized Signature

By:

Title:

Date Issued:

Copy: Engineer

# PERFORMANCE BOND

CONTRACTOR *(name and address)*:

SURETY *(name and address of principal place of business)*:

OWNER
Village of Palm Springs
226 Cypress Lane
Palm Springs, FL 33461

CONSTRUCTION CONTRACT
Effective Date of the Agreement:
Amount:
Description: **SCADA System Upgrade, Main Water Treatment Plant**

BOND
Bond Number:
Date *(not earlier than the Effective Date of the Agreement of the Construction Contract)*:
Amount:
Modifications to this Bond Form: ☐ None ☐ See Paragraph 16

---

Surety and Contractor, intending to be legally bound hereby, subject to the terms set forth below, do each cause this Performance Bond to be duly executed by an authorized officer, agent, or representative.

| **CONTRACTOR AS PRINCIPAL** | **SURETY** |
|---|---|
| _____ *(seal)* | _____ *(seal)* |
| Contractor's Name and Corporate Seal | Surety's Name and Corporate Seal |
| **By:** _____ | **By:** _____ |
| Signature | Signature *(attach power of attorney)* |
| _____ | _____ |
| Print Name | Print Name |
| _____ | _____ |
| Title | Title |
| **Attest:** _____ | **Attest:** _____ |
| Signature | Signature |
| _____ | _____ |
| Title | Title |

***Notes: (1) Provide supplemental execution by any additional parties, such as joint venturers. (2) Any singular reference to Contractor, Surety, Owner, or other party shall be considered plural where applicable.***


**Copyright © 2013 National Society of Professional Engineers, American Council of Engineering Companies, and American Society of Civil Engineers. All rights reserved.**

1. The Contractor and Surety, jointly and severally, bind themselves, their heirs, executors, administrators, successors, and assigns to the Owner for the performance of the Construction Contract, which is incorporated herein by reference.

2. If the Contractor performs the Construction Contract, the Surety and the Contractor shall have no obligation under this Bond, except when applicable to participate in a conference as provided in Paragraph 3.

3. If there is no Owner Default under the Construction Contract, the Surety's obligation under this Bond shall arise after:

3.1 The Owner first provides notice to the Contractor and the Surety that the Owner is considering declaring a Contractor Default. Such notice shall indicate whether the Owner is requesting a conference among the Owner, Contractor, and Surety to discuss the Contractor's performance. If the Owner does not request a conference, the Surety may, within five (5) business days after receipt of the Owner's notice, request such a conference. If the Surety timely requests a conference, the Owner shall attend. Unless the Owner agrees otherwise, any conference requested under this Paragraph 3.1 shall be held within ten (10) business days of the Surety's receipt of the Owner's notice. If the Owner, the Contractor, and the Surety agree, the Contractor shall be allowed a reasonable time to perform the Construction Contract, but such an agreement shall not waive the Owner's right, if any, subsequently to declare a Contractor Default;

3.2 The Owner declares a Contractor Default, terminates the Construction Contract and notifies the Surety; and

3.3 The Owner has agreed to pay the Balance of the Contract Price in accordance with the terms of the Construction Contract to the Surety or to a contractor selected to perform the Construction Contract.

4. Failure on the part of the Owner to comply with the notice requirement in Paragraph 3.1 shall not constitute a failure to comply with a condition precedent to the Surety's obligations, or release the Surety from its obligations, except to the extent the Surety demonstrates actual prejudice.

5. When the Owner has satisfied the conditions of Paragraph 3, the Surety shall promptly and at the Surety's expense take one of the following actions:

5.1 Arrange for the Contractor, with the consent of the Owner, to perform and complete the Construction Contract;

5.2 Undertake to perform and complete the Construction Contract itself, through its agents or independent contractors;

5.3 Obtain bids or negotiated proposals from qualified contractors acceptable to the Owner for a contract for performance and completion of the Construction Contract, arrange for a contract to be prepared for execution by the Owner and a contractor selected with the Owners concurrence, to be secured with performance and payment bonds executed by a qualified surety equivalent to the bonds issued on the Construction Contract, and pay to the Owner the amount of damages as described in Paragraph 7 in excess of the Balance of the Contract Price incurred by the Owner as a result of the Contractor Default; or

5.4 Waive its right to perform and complete, arrange for completion, or obtain a new contractor, and with reasonable promptness under the circumstances:

5.4.1 After investigation, determine the amount for which it may be liable to the Owner and, as soon as practicable after the amount is determined, make payment to the Owner; or

5.4.2 Deny liability in whole or in part and notify the Owner, citing the reasons for denial.

6. If the Surety does not proceed as provided in Paragraph 5 with reasonable promptness, the Surety shall be deemed to be in default on this Bond seven days after receipt of an additional written notice from the Owner to the Surety demanding that the Surety perform its obligations under this Bond, and the Owner shall be entitled to enforce any remedy available to the Owner. If the Surety proceeds as provided in Paragraph 5.4, and the Owner refuses the payment or the Surety has denied liability, in whole or in part, without further notice the Owner shall be entitled to enforce any remedy available to the Owner.

7. If the Surety elects to act under Paragraph 5.1, 5.2, or 5.3, then the responsibilities of the Surety to the Owner shall not be greater than those of the Contractor under the Construction Contract, and the responsibilities of the Owner to the Surety shall not be greater than those of the Owner under the Construction Contract. Subject to the commitment by the Owner to pay the Balance of the Contract Price, the Surety is obligated, without duplication for:

7.1 the responsibilities of the Contractor for correction of defective work and completion of the Construction Contract;

7.2 additional legal, design professional, and delay costs resulting from the Contractor's Default, and resulting from the actions or failure to act of the Surety under Paragraph 5; and

7.3 liquidated damages, or if no liquidated damages are specified in the Construction Contract, actual damages caused by delayed performance or non-performance of the Contractor.

8. If the Surety elects to act under Paragraph 5.1, 5.3, or 5.4, the Surety's liability is limited to the amount of this Bond.

9. The Surety shall not be liable to the Owner or others for obligations of the Contractor that are unrelated to the Construction Contract, and the Balance of the Contract Price shall not be reduced or set off on account of any such unrelated obligations. No right of action shall accrue on this Bond to any person or entity other than the Owner or its heirs, executors, administrators, successors, and assigns.


**Copyright © 2013 National Society of Professional Engineers, American Council of Engineering Companies, and American Society of Civil Engineers. All rights reserved.**

10. The Surety hereby waives notice of any change, including changes of time, to the Construction Contract or to related subcontracts, purchase orders, and other obligations.

11. Any proceeding, legal or equitable, under this Bond may be instituted in any court of competent jurisdiction in the location in which the work or part of the work is located and shall be instituted within two years after a declaration of Contractor Default or within two years after the Contractor ceased working or within two years after the Surety refuses or fails to perform its obligations under this Bond, whichever occurs first. If the provisions of this paragraph are void or prohibited by law, the minimum periods of limitations available to sureties as a defense in the jurisdiction of the suit shall be applicable.

12. Notice to the Surety, the Owner, or the Contractor shall be mailed or delivered to the address shown on the page on which their signature appears.

13. When this Bond has been furnished to comply with a statutory or other legal requirement in the location where the construction was to be performed, any provision in this Bond conflicting with said statutory or legal requirement shall be deemed deleted here from and provisions conforming to such statutory or other legal requirement shall be deemed incorporated herein. When so furnished, the intent is that this Bond shall be construed as a statutory bond and not as a common law bond.

14. Definitions

14.1 Balance of the Contract Price: The total amount payable by the Owner to the Contractor under the Construction Contract after all proper adjustments have been made including allowance for the Contractor for any amounts received or to be received by the Owner in settlement of insurance or other claims for damages to which the Contractor is entitled, reduced by all valid and proper payments made to or on behalf of the Contractor under the Construction Contract.

14.2 Construction Contract: The agreement between the Owner and Contractor identified on the cover page, including all Contract Documents and changes made to the agreement and the Contract Documents.

14.3 Contractor Default: Failure of the Contractor, which has not been remedied or waived, to perform or otherwise to comply with a material term of the Construction Contract.

14.4 Owner Default: Failure of the Owner, which has not been remedied or waived, to pay the Contractor as required under the Construction Contract or to perform and complete or comply with the other material terms of the Construction Contract.

14.5 Contract Documents: All the documents that comprise the agreement between the Owner and Contractor.

15. If this Bond is issued for an agreement between a contractor and subcontractor, the term Contractor in this Bond shall be deemed to be Subcontractor and the term Owner shall be deemed to be Contractor.

16. Modifications to this Bond are as follows:


**Copyright © 2013 National Society of Professional Engineers, American Council of Engineering Companies, and American Society of Civil Engineers. All rights reserved.**

# PAYMENT BOND

CONTRACTOR *(name and address)*:

SURETY *(name and address of principal place of business)*:

OWNER

Village of Palm Springs
226 Cypress Lane
Palm Springs, FL 33461

CONSTRUCTION CONTRACT

Effective Date of the Agreement:
Amount:
Description: **SCADA System Upgrade, Main Water Treatment Plant**

BOND

Bond Number:
Date *(not earlier than the Effective Date of the Agreement of the Construction Contract)*:
Amount:
Modifications to this Bond Form: ☐ None ☐ See Paragraph 18

---

Surety and Contractor, intending to be legally bound hereby, subject to the terms set forth below, do each cause this Payment Bond to be duly executed by an authorized officer, agent, or representative.

**CONTRACTOR AS PRINCIPAL**

_____ *(seal)*
Contractor's Name and Corporate Seal

**By:** _____
Signature

_____
Print Name

_____
Title

**Attest:** _____
Signature

_____
Title

**SURETY**

_____ *(seal)*
Surety's Name and Corporate Seal

**By:** _____
Signature *(attach power of attorney)*

_____
Print Name

_____
Title

**Attest:** _____
Signature

_____
Title

***Notes: (1) Provide supplemental execution by any additional parties, such as joint venturers. (2) Any singular reference to Contractor, Surety, Owner, or other party shall be considered plural where applicable.***


**Copyright © 2013 National Society of Professional Engineers, American Council of Engineering Companies, and American Society of Civil Engineers. All rights reserved.**

1. The Contractor and Surety, jointly and severally, bind themselves, their heirs, executors, administrators, successors, and assigns to the Owner to pay for labor, materials, and equipment furnished for use in the performance of the Construction Contract, which is incorporated herein by reference, subject to the following terms.

2. If the Contractor promptly makes payment of all sums due to Claimants, and defends, indemnifies, and holds harmless the Owner from claims, demands, liens, or suits by any person or entity seeking payment for labor, materials, or equipment furnished for use in the performance of the Construction Contract, then the Surety and the Contractor shall have no obligation under this Bond.

3. If there is no Owner Default under the Construction Contract, the Surety's obligation to the Owner under this Bond shall arise after the Owner has promptly notified the Contractor and the Surety (at the address described in Paragraph 13) of claims, demands, liens, or suits against the Owner or the Owner's property by any person or entity seeking payment for labor, materials, or equipment furnished for use in the performance of the Construction Contract, and tendered defense of such claims, demands, liens, or suits to the Contractor and the Surety.

4. When the Owner has satisfied the conditions in Paragraph 3, the Surety shall promptly and at the Surety's expense defend, indemnify, and hold harmless the Owner against a duly tendered claim, demand, lien, or suit.

5. The Surety's obligations to a Claimant under this Bond shall arise after the following:

    5.1 Claimants who do not have a direct contract with the Contractor,

        5.1.1 have furnished a written notice of non-payment to the Contractor, stating with substantial accuracy the amount claimed and the name of the party to whom the materials were, or equipment was, furnished or supplied or for whom the labor was done or performed, within ninety (90) days after having last performed labor or last furnished materials or equipment included in the Claim; and

        5.1.2 have sent a Claim to the Surety (at the address described in Paragraph 13).

    5.2 Claimants who are employed by or have a direct contract with the Contractor have sent a Claim to the Surety (at the address described in Paragraph 13).

6. If a notice of non-payment required by Paragraph 5.1.1 is given by the Owner to the Contractor, that is sufficient to satisfy a Claimant's obligation to furnish a written notice of non-payment under Paragraph 5.1.1.

7. When a Claimant has satisfied the conditions of Paragraph 5.1 or 5.2, whichever is applicable, the Surety shall promptly and at the Surety's expense take the following actions:

    7.1 Send an answer to the Claimant, with a copy to the Owner, within sixty (60) days after receipt of the Claim, stating the amounts that are undisputed and the basis for challenging any amounts that are disputed; and

    7.2 Pay or arrange for payment of any undisputed amounts.

    7.3 The Surety's failure to discharge its obligations under Paragraph 7.1 or 7.2 shall not be deemed to constitute a waiver of defenses the Surety or Contractor may have or acquire as to a Claim, except as to undisputed amounts for which the Surety and Claimant have reached agreement. If, however, the Surety fails to discharge its obligations under Paragraph 7.1 or 7.2, the Surety shall indemnify the Claimant for the reasonable attorney's fees the Claimant incurs thereafter to recover any sums found to be due and owing to the Claimant.

8. The Surety's total obligation shall not exceed the amount of this Bond, plus the amount of reasonable attorney's fees provided under Paragraph 7.3, and the amount of this Bond shall be credited for any payments made in good faith by the Surety.

9. Amounts owed by the Owner to the Contractor under the Construction Contract shall be used for the performance of the Construction Contract and to satisfy claims, if any, under any construction performance bond. By the Contractor furnishing and the Owner accepting this Bond, they agree that all funds earned by the Contractor in the performance of the Construction Contract are dedicated to satisfy obligations of the Contractor and Surety under this Bond, subject to the Owner's priority to use the funds for the completion of the work.

10. The Surety shall not be liable to the Owner, Claimants, or others for obligations of the Contractor that are unrelated to the Construction Contract. The Owner shall not be liable for the payment of any costs or expenses of any Claimant under this Bond, and shall have under this Bond no obligation to make payments to or give notice on behalf of Claimants, or otherwise have any obligations to Claimants under this Bond.

11. The Surety hereby waives notice of any change, including changes of time, to the Construction Contract or to related subcontracts, purchase orders, and other obligations.


**Copyright © 2013 National Society of Professional Engineers, American Council of Engineering Companies, and American Society of Civil Engineers. All rights reserved.**

12. No suit or action shall be commenced by a Claimant under this Bond other than in a court of competent jurisdiction in the state in which the project that is the subject of the Construction Contract is located or after the expiration of one year from the date (1) on which the Claimant sent a Claim to the Surety pursuant to Paragraph 5.1.2 or 5.2, or (2) on which the last labor or service was performed by anyone or the last materials or equipment were furnished by anyone under the Construction Contract, whichever of (1) or (2) first occurs. If the provisions of this paragraph are void or prohibited by law, the minimum period of limitation available to sureties as a defense in the jurisdiction of the suit shall be applicable.

13. Notice and Claims to the Surety, the Owner, or the Contractor shall be mailed or delivered to the address shown on the page on which their signature appears. Actual receipt of notice or Claims, however accomplished, shall be sufficient compliance as of the date received.

14. When this Bond has been furnished to comply with a statutory or other legal requirement in the location where the construction was to be performed, any provision in this Bond conflicting with said statutory or legal requirement shall be deemed deleted herefrom and provisions conforming to such statutory or other legal requirement shall be deemed incorporated herein. When so furnished, the intent is that this Bond shall be construed as a statutory bond and not as a common law bond.

15. Upon requests by any person or entity appearing to be a potential beneficiary of this Bond, the Contractor and Owner shall promptly furnish a copy of this Bond or shall permit a copy to be made.

16. **Definitions**

16.1 **Claim:** A written statement by the Claimant including at a minimum:

1. The name of the Claimant;
2. The name of the person for whom the labor was done, or materials or equipment furnished;
3. A copy of the agreement or purchase order pursuant to which labor, materials, or equipment was furnished for use in the performance of the Construction Contract;
4. A brief description of the labor, materials, or equipment furnished;
5. The date on which the Claimant last performed labor or last furnished materials or equipment for use in the performance of the Construction Contract;
6. The total amount earned by the Claimant for labor, materials, or equipment furnished as of the date of the Claim;
7. The total amount of previous payments received by the Claimant; and
8. The total amount due and unpaid to the Claimant for labor, materials, or equipment furnished as of the date of the Claim.

16.2 **Claimant:** An individual or entity having a direct contract with the Contractor or with a subcontractor of the Contractor to furnish labor, materials, or equipment for use in the performance of the Construction Contract. The term Claimant also includes any individual or entity that has rightfully asserted a claim under an applicable mechanic's lien or similar statute against the real property upon which the Project is located. The intent of this Bond shall be to include without limitation in the terms of "labor, materials, or equipment" that part of the water, gas, power, light, heat, oil, gasoline, telephone service, or rental equipment used in the Construction Contract, architectural and engineering services required for performance of the work of the Contractor and the Contractor's subcontractors, and all other items for which a mechanic's lien may be asserted in the jurisdiction where the labor, materials, or equipment were furnished.

16.3 **Construction Contract:** The agreement between the Owner and Contractor identified on the cover page, including all Contract Documents and all changes made to the agreement and the Contract Documents.

16.4 **Owner Default**: Failure of the Owner, which has not been remedied or waived, to pay the Contractor as required under the Construction Contract or to perform and complete or comply with the other material terms of the Construction Contract.

16.5 **Contract Documents:** All the documents that comprise the agreement between the Owner and Contractor.

17. If this Bond is issued for an agreement between a contractor and subcontractor, the term Contractor in this Bond shall be deemed to be Subcontractor and the term Owner shall be deemed to be Contractor.

18. Modifications to this Bond are as follows:


**Copyright © 2013 National Society of Professional Engineers, American Council of Engineering Companies, and American Society of Civil Engineers. All rights reserved.**

# PART 3




# CONTRACT CONDITIONS

This document has important legal consequences; consultation with an attorney is encouraged with respect to its use or modification. This document should be adapted to the particular circumstances of the contemplated Project and the controlling Laws and Regulations.

# STANDARD GENERAL CONDITIONS OF THE CONSTRUCTION CONTRACT

Prepared by

EJCDC®
ENGINEERS JOINT CONTRACT DOCUMENTS COMMITTEE

Issued and Published Jointly by

ACEC
AMERICAN COUNCIL OF ENGINEERING COMPANIES

ASCE
AMERICAN SOCIETY OF CIVIL ENGINEERS

National Society of Professional Engineers®

**Endorsed by**

CSI NUCA
REPRESENTING UTILITY & EXCAVATION CONTRACTORS

**EJCDC® C-700 (Rev. 1), Standard General Conditions of the Construction Contract.**
**Copyright © 2013 National Society of Professional Engineers, American Council of Engineering Companies, and American Society of Civil Engineers. All rights reserved.**

These General Conditions have been prepared for use with the Agreement Between Owner and Contractor for Construction Contract (EJCDC® C-520, Stipulated Sum, or C-525, Cost-Plus, 2013 Editions). Their provisions are interrelated and a change in one may necessitate a change in the other.

To prepare supplementary conditions that are coordinated with the General Conditions, use EJCDC's Guide to the Preparation of Supplementary Conditions (EJCDC® C-800, 2013 Edition). The full EJCDC Construction series of documents is discussed in the Commentary on the 2013 EJCDC Construction Documents (EJCDC® C-001, 2013 Edition).

Copyright © 2013:

National Society of Professional Engineers

1420 King Street, Alexandria, VA 22314-2794

(703) 684-2882

www.nspe.org

American Council of Engineering Companies

1015 15th Street N.W., Washington, DC 20005

(202) 347-7474

www.acec.org

American Society of Civil Engineers

1801 Alexander Bell Drive, Reston, VA 20191-4400

(800) 548-2723

www.asce.org

The copyright for this document is owned jointly by the three sponsoring organizations listed above. The National Society of Professional Engineers is the Copyright Administrator for the EJCDC documents; please direct all inquiries regarding EJCDC copyrights to NSPE.

NOTE: EJCDC publications may be purchased at www.ejcdc.org, or from any of the sponsoring organizations above.


**Copyright © 2013 National Society of Professional Engineers, American Council of Engineering Companies, and American Society of Civil Engineers. All rights reserved.**

# STANDARD GENERAL CONDITIONS OF THE CONSTRUCTION CONTRACT

## TABLE OF CONTENTS


Page

Article 1 – Definitions and Terminology ..... 1

1.01 Defined Terms ..... 1

1.02 Terminology ..... 5

Article 2 – Preliminary Matters ..... 6

2.01 Delivery of Bonds and Evidence of Insurance ..... 6

2.02 Copies of Documents ..... 6

2.03 Before Starting Construction ..... 6

2.04 Preconstruction Conference; Designation of Authorized Representatives ..... 7

2.05 Initial Acceptance of Schedules ..... 7

2.06 Electronic Transmittals ..... 7

Article 3 – Documents: Intent, Requirements, Reuse ..... 8

3.01 Intent ..... 8

3.02 Reference Standards ..... 8

3.03 Reporting and Resolving Discrepancies ..... 8

3.04 Requirements of the Contract Documents ..... 9

3.05 Reuse of Documents ..... 10

Article 4 – Commencement and Progress of the Work ..... 10

4.01 Commencement of Contract Times; Notice to Proceed ..... 10

4.02 Starting the Work ..... 10

4.03 Reference Points ..... 10

4.04 Progress Schedule ..... 10

4.05 Delays in Contractor's Progress ..... 11

Article 5 – Availability of Lands; Subsurface and Physical Conditions; Hazardous Environmental Conditions ..... 12

5.01 Availability of Lands ..... 12

5.02 Use of Site and Other Areas ..... 12

5.03 Subsurface and Physical Conditions ..... 13

5.04 Differing Subsurface or Physical Conditions ..... 14

5.05 Underground Facilities ..... 15




Copyright © 2013 National Society of Professional Engineers, American Council of Engineering Companies, and American Society of Civil Engineers. All rights reserved.

5.06 Hazardous Environmental Conditions at Site ..... 17
Article 6 – Bonds and Insurance ..... 19
6.01 Performance, Payment, and Other Bonds ..... 19
6.02 Insurance—General Provisions ..... 19
6.03 Contractor's Insurance ..... 20
6.04 Owner's Liability Insurance ..... 23
6.05 Property Insurance ..... 23
6.06 Waiver of Rights ..... 25
6.07 Receipt and Application of Property Insurance Proceeds ..... 25
Article 7 – Contractor's Responsibilities ..... 26
7.01 Supervision and Superintendence ..... 26
7.02 Labor; Working Hours ..... 26
7.03 Services, Materials, and Equipment ..... 26
7.04 "Or Equals" ..... 27
7.05 Substitutes ..... 28
7.06 Concerning Subcontractors, Suppliers, and Others ..... 29
7.07 Patent Fees and Royalties ..... 31
7.08 Permits ..... 31
7.09 Taxes ..... 32
7.10 Laws and Regulations ..... 32
7.11 Record Documents ..... 32
7.12 Safety and Protection ..... 32
7.13 Safety Representative ..... 33
7.14 Hazard Communication Programs ..... 33
7.15 Emergencies ..... 34
7.16 Shop Drawings, Samples, and Other Submittals ..... 34
7.17 Contractor's General Warranty and Guarantee ..... 36
7.18 Indemnification ..... 37
7.19 Delegation of Professional Design Services ..... 37
Article 8 – Other Work at the Site ..... 38
8.01 Other Work ..... 38
8.02 Coordination ..... 39
8.03 Legal Relationships ..... 39


**Copyright © 2013 National Society of Professional Engineers, American Council of Engineering Companies, and American Society of Civil Engineers. All rights reserved.**

Article 9 – Owner's Responsibilities ..... 40
9.01 Communications to Contractor ..... 40
9.02 Replacement of Engineer ..... 40
9.03 Furnish Data ..... 40
9.04 Pay When Due ..... 40
9.05 Lands and Easements; Reports, Tests, and Drawings ..... 40
9.06 Insurance ..... 40
9.07 Change Orders ..... 40
9.08 Inspections, Tests, and Approvals ..... 41
9.09 Limitations on Owner's Responsibilities ..... 41
9.10 Undisclosed Hazardous Environmental Condition ..... 41
9.11 Evidence of Financial Arrangements ..... 41
9.12 Safety Programs ..... 41
Article 10 – Engineer's Status During Construction ..... 41
10.01 Owner's Representative ..... 41
10.02 Visits to Site ..... 41
10.03 Project Representative ..... 42
10.04 Rejecting Defective Work ..... 42
10.05 Shop Drawings, Change Orders and Payments ..... 42
10.06 Determinations for Unit Price Work ..... 42
10.07 Decisions on Requirements of Contract Documents and Acceptability of Work ..... 42
10.08 Limitations on Engineer's Authority and Responsibilities ..... 42
10.09 Compliance with Safety Program ..... 43
Article 11 – Amending the Contract Documents; Changes in the Work ..... 43
11.01 Amending and Supplementing Contract Documents ..... 43
11.02 Owner-Authorized Changes in the Work ..... 44
11.03 Unauthorized Changes in the Work ..... 44
11.04 Change of Contract Price ..... 44
11.05 Change of Contract Times ..... 45
11.06 Change Proposals ..... 45
11.07 Execution of Change Orders ..... 46
11.08 Notification to Surety ..... 47
Article 12 – Claims ..... 47


**Copyright © 2013 National Society of Professional Engineers, American Council of Engineering Companies, and American Society of Civil Engineers. All rights reserved.**

12.01 Claims ..... 47
Article 13 – Cost of the Work; Allowances; Unit Price Work ..... 48
13.01 Cost of the Work ..... 48
13.02 Allowances ..... 50
13.03 Unit Price Work ..... 51
Article 14 – Tests and Inspections; Correction, Removal or Acceptance of Defective Work ..... 52
14.01 Access to Work ..... 52
14.02 Tests, Inspections, and Approvals ..... 52
14.03 Defective Work ..... 53
14.04 Acceptance of Defective Work ..... 53
14.05 Uncovering Work ..... 53
14.06 Owner May Stop the Work ..... 54
14.07 Owner May Correct Defective Work ..... 54
Article 15 – Payments to Contractor; Set-Offs; Completion; Correction Period ..... 55
15.01 Progress Payments ..... 55
15.02 Contractor's Warranty of Title ..... 58
15.03 Substantial Completion ..... 58
15.04 Partial Use or Occupancy ..... 59
15.05 Final Inspection ..... 59
15.06 Final Payment ..... 59
15.07 Waiver of Claims ..... 61
15.08 Correction Period ..... 61
Article 16 – Suspension of Work and Termination ..... 62
16.01 Owner May Suspend Work ..... 62
16.02 Owner May Terminate for Cause ..... 62
16.03 Owner May Terminate For Convenience ..... 63
16.04 Contractor May Stop Work or Terminate ..... 63
Article 17 – Final Resolution of Disputes ..... 64
17.01 Methods and Procedures ..... 64
Article 18 – Miscellaneous ..... 64
18.01 Giving Notice ..... 64
18.02 Computation of Times ..... 64
18.03 Cumulative Remedies ..... 64


**Copyright © 2013 National Society of Professional Engineers, American Council of Engineering Companies, and American Society of Civil Engineers. All rights reserved.**

18.04 Limitation of Damages ..... 65
18.05 No Waiver ..... 65
18.06 Survival of Obligations ..... 65
18.07 Controlling Law ..... 65
18.08 Headings ..... 65


Copyright © 2013 National Society of Professional Engineers, American Council of Engineering Companies, and American Society of Civil Engineers. All rights reserved.

**ARTICLE 1 – DEFINITIONS AND TERMINOLOGY**

1.01 *Defined Terms*

A. Wherever used in the Bidding Requirements or Contract Documents, a term printed with initial capital letters, including the term's singular and plural forms, will have the meaning indicated in the definitions below. In addition to terms specifically defined, terms with initial capital letters in the Contract Documents include references to identified articles and paragraphs, and the titles of other documents or forms.

1. *Addenda*—Written or graphic instruments issued prior to the opening of Bids which clarify, correct, or change the Bidding Requirements or the proposed Contract Documents.

2. *Agreement*—The written instrument, executed by Owner and Contractor, that sets forth the Contract Price and Contract Times, identifies the parties and the Engineer, and designates the specific items that are Contract Documents.

3. *Application for Payment*—The form acceptable to Engineer which is to be used by Contractor during the course of the Work in requesting progress or final payments and which is to be accompanied by such supporting documentation as is required by the Contract Documents.

4. *Bid*—The offer of a Bidder submitted on the prescribed form setting forth the prices for the Work to be performed.

5. *Bidder*—An individual or entity that submits a Bid to Owner.

6. *Bidding Documents*—The Bidding Requirements, the proposed Contract Documents, and all Addenda.

7. *Bidding Requirements*—The advertisement or invitation to bid, Instructions to Bidders, Bid Bond or other Bid security, if any, the Bid Form, and the Bid with any attachments.

8. *Change Order*—A document which is signed by Contractor and Owner and authorizes an addition, deletion, or revision in the Work or an adjustment in the Contract Price or the Contract Times, or other revision to the Contract, issued on or after the Effective Date of the Contract.

9. *Change Proposal*—A written request by Contractor, duly submitted in compliance with the procedural requirements set forth herein, seeking an adjustment in Contract Price or Contract Times, or both; contesting an initial decision by Engineer concerning the requirements of the Contract Documents or the acceptability of Work under the Contract Documents; challenging a set-off against payments due; or seeking other relief with respect to the terms of the Contract.

10. *Claim*—(a) A demand or assertion by Owner directly to Contractor, duly submitted in compliance with the procedural requirements set forth herein: seeking an adjustment of Contract Price or Contract Times, or both; contesting an initial decision by Engineer concerning the requirements of the Contract Documents or the acceptability of Work under the Contract Documents; contesting Engineer's decision regarding a Change Proposal; seeking resolution of a contractual issue that Engineer has declined to address; or seeking other relief with respect to the terms of the Contract; or (b) a demand or assertion by Contractor directly to Owner, duly submitted in compliance with the procedural requirements set forth herein, contesting Engineer's decision regarding a Change Proposal; or seeking resolution of a contractual issue that Engineer


**Copyright © 2013 National Society of Professional Engineers, American Council of Engineering Companies, and American Society of Civil Engineers. All rights reserved.**

has declined to address. A demand for money or services by a third party is not a Claim.

11. *Constituent of Concern*—Asbestos, petroleum, radioactive materials, polychlorinated biphenyls (PCBs), hazardous waste, and any substance, product, waste, or other material of any nature whatsoever that is or becomes listed, regulated, or addressed pursuant to (a) the Comprehensive Environmental Response, Compensation and Liability Act, 42 U.S.C. §§9601 et seq. ("CERCLA"); (b) the Hazardous Materials Transportation Act, 49 U.S.C. §§5101 et seq.; (c) the Resource Conservation and Recovery Act, 42 U.S.C. §§6901 et seq. ("RCRA"); (d) the Toxic Substances Control Act, 15 U.S.C. §§2601 et seq.; (e) the Clean Water Act, 33 U.S.C. §§1251 et seq.; (f) the Clean Air Act, 42 U.S.C. §§7401 et seq.; or (g) any other federal, state, or local statute, law, rule, regulation, ordinance, resolution, code, order, or decree regulating, relating to, or imposing liability or standards of conduct concerning, any hazardous, toxic, or dangerous waste, substance, or material.

12. *Contract*—The entire and integrated written contract between the Owner and Contractor concerning the Work.

13. *Contract Documents*—Those items so designated in the Agreement, and which together comprise the Contract.

14. *Contract Price*—The money that Owner has agreed to pay Contractor for completion of the Work in accordance with the Contract Documents. .

15. *Contract Times*—The number of days or the dates by which Contractor shall: (a) achieve Milestones, if any; (b) achieve Substantial Completion; and (c) complete the Work.

16. *Contractor*—The individual or entity with which Owner has contracted for performance of the Work.

17. *Cost of the Work*—See Paragraph 13.01 for definition.

18. *Drawings*—The part of the Contract that graphically shows the scope, extent, and character of the Work to be performed by Contractor.

19. *Effective Date of the Contract*—The date, indicated in the Agreement, on which the Contract becomes effective.

20. *Engineer*—The individual or entity named as such in the Agreement.

21. *Field Order*—A written order issued by Engineer which requires minor changes in the Work but does not change the Contract Price or the Contract Times.

22. *Hazardous Environmental Condition*—The presence at the Site of Constituents of Concern in such quantities or circumstances that may present a danger to persons or property exposed thereto. The presence at the Site of materials that are necessary for the execution of the Work, or that are to be incorporated in the Work, and that are controlled and contained pursuant to industry practices, Laws and Regulations, and the requirements of the Contract, does not establish a Hazardous Environmental Condition.

23. *Laws and Regulations; Laws or Regulations*—Any and all applicable laws, statutes, rules, regulations, ordinances, codes, and orders of any and all governmental bodies, agencies, authorities, and courts having jurisdiction.


**Copyright © 2013 National Society of Professional Engineers, American Council of Engineering Companies, and American Society of Civil Engineers. All rights reserved.**

24. *Liens*—Charges, security interests, or encumbrances upon Contract-related funds, real property, or personal property.

25. *Milestone*—A principal event in the performance of the Work that the Contract requires Contractor to achieve by an intermediate completion date or by a time prior to Substantial Completion of all the Work.

26. *Notice of Award*—The written notice by Owner to a Bidder of Owner's acceptance of the Bid.

27. *Notice to Proceed*—A written notice by Owner to Contractor fixing the date on which the Contract Times will commence to run and on which Contractor shall start to perform the Work.

28. *Owner*—The individual or entity with which Contractor has contracted regarding the Work, and which has agreed to pay Contractor for the performance of the Work, pursuant to the terms of the Contract.

29. *Progress Schedule*—A schedule, prepared and maintained by Contractor, describing the sequence and duration of the activities comprising the Contractor's plan to accomplish the Work within the Contract Times.

30. *Project*—The total undertaking to be accomplished for Owner by engineers, contractors, and others, including planning, study, design, construction, testing, commissioning, and start-up, and of which the Work to be performed under the Contract Documents is a part.

31. *Project Manual*—The written documents prepared for, or made available for, procuring and constructing the Work, including but not limited to the Bidding Documents or other construction procurement documents, geotechnical and existing conditions information, the Agreement, bond forms, General Conditions, Supplementary Conditions, and Specifications. The contents of the Project Manual may be bound in one or more volumes.

32. *Resident Project Representative*—The authorized representative of Engineer assigned to assist Engineer at the Site. As used herein, the term Resident Project Representative or "RPR" includes any assistants or field staff of Resident Project Representative.

33. *Samples*—Physical examples of materials, equipment, or workmanship that are representative of some portion of the Work and that establish the standards by which such portion of the Work will be judged.

34. *Schedule of Submittals*—A schedule, prepared and maintained by Contractor, of required submittals and the time requirements for Engineer's review of the submittals and the performance of related construction activities.

35. *Schedule of Values*—A schedule, prepared and maintained by Contractor, allocating portions of the Contract Price to various portions of the Work and used as the basis for reviewing Contractor's Applications for Payment.

36. *Shop Drawings*—All drawings, diagrams, illustrations, schedules, and other data or information that are specifically prepared or assembled by or for Contractor and submitted by Contractor to illustrate some portion of the Work. Shop Drawings, whether approved or not, are not Drawings and are not Contract Documents.


**Copyright © 2013 National Society of Professional Engineers, American Council of Engineering Companies, and American Society of Civil Engineers. All rights reserved.**

37. *Site*—Lands or areas indicated in the Contract Documents as being furnished by Owner upon which the Work is to be performed, including rights-of-way and easements, and such other lands furnished by Owner which are designated for the use of Contractor.

38. *Specifications*—The part of the Contract that consists of written requirements for materials, equipment, systems, standards, and workmanship as applied to the Work, and certain administrative requirements and procedural matters applicable to the Work.

39. *Subcontractor*—An individual or entity having a direct contract with Contractor or with any other Subcontractor for the performance of a part of the Work.

40. *Substantial Completion*—The time at which the Work (or a specified part thereof) has progressed to the point where, in the opinion of Engineer, the Work (or a specified part thereof) is sufficiently complete, in accordance with the Contract Documents, so that the Work (or a specified part thereof) can be utilized for the purposes for which it is intended. The terms "substantially complete" and "substantially completed" as applied to all or part of the Work refer to Substantial Completion thereof.

41. *Successful Bidder*—The Bidder whose Bid the Owner accepts, and to which the Owner makes an award of contract, subject to stated conditions.

42. *Supplementary Conditions*—The part of the Contract that amends or supplements these General Conditions.

43. *Supplier*—A manufacturer, fabricator, supplier, distributor, materialman, or vendor having a direct contract with Contractor or with any Subcontractor to furnish materials or equipment to be incorporated in the Work by Contractor or a Subcontractor.

44. *Technical Data*—Those items expressly identified as Technical Data in the Supplementary Conditions, with respect to either (a) subsurface conditions at the Site, or physical conditions relating to existing surface or subsurface structures at the Site (except Underground Facilities) or (b) Hazardous Environmental Conditions at the Site. If no such express identifications of Technical Data have been made with respect to conditions at the Site, then the data contained in boring logs, recorded measurements of subsurface water levels, laboratory test results, and other factual, objective information regarding conditions at the Site that are set forth in any geotechnical or environmental report prepared for the Project and made available to Contractor are hereby defined as Technical Data with respect to conditions at the Site under Paragraphs 5.03, 5.04, and 5.06.

45. *Underground Facilities*—All underground pipelines, conduits, ducts, cables, wires, manholes, vaults, tanks, tunnels, or other such facilities or attachments, and any encasements containing such facilities, including but not limited to those that convey electricity, gases, steam, liquid petroleum products, telephone or other communications, fiber optic transmissions, cable television, water, wastewater, storm water, other liquids or chemicals, or traffic or other control systems.

46. *Unit Price Work*—Work to be paid for on the basis of unit prices.

47. *Work*—The entire construction or the various separately identifiable parts thereof required to be provided under the Contract Documents. Work includes and is the result of performing or providing all labor, services, and documentation necessary to produce such construction; furnishing, installing, and incorporating all materials and equipment into such construction; and may include related services such as testing, start-up, and commissioning, all as required by the Contract Documents.


**Copyright © 2013 National Society of Professional Engineers, American Council of Engineering Companies, and American Society of Civil Engineers. All rights reserved.**

48. *Work Change Directive*—A written directive to Contractor issued on or after the Effective Date of the Contract, signed by Owner and recommended by Engineer, ordering an addition, deletion, or revision in the Work.

1.02 *Terminology*

A. The words and terms discussed in the following paragraphs are not defined but, when used in the Bidding Requirements or Contract Documents, have the indicated meaning.

B. *Intent of Certain Terms or Adjectives*:

1. The Contract Documents include the terms "as allowed," "as approved," "as ordered," "as directed" or terms of like effect or import to authorize an exercise of professional judgment by Engineer. In addition, the adjectives "reasonable," "suitable," "acceptable," "proper," "satisfactory," or adjectives of like effect or import are used to describe an action or determination of Engineer as to the Work. It is intended that such exercise of professional judgment, action, or determination will be solely to evaluate, in general, the Work for compliance with the information in the Contract Documents and with the design concept of the Project as a functioning whole as shown or indicated in the Contract Documents (unless there is a specific statement indicating otherwise). The use of any such term or adjective is not intended to and shall not be effective to assign to Engineer any duty or authority to supervise or direct the performance of the Work, or any duty or authority to undertake responsibility contrary to the provisions of Article 10 or any other provision of the Contract Documents.

C. *Day*:

1. The word "day" means a calendar day of 24 hours measured from midnight to the next midnight.

D. *Defective*:

1. The word "defective," when modifying the word "Work," refers to Work that is unsatisfactory, faulty, or deficient in that it:

a. does not conform to the Contract Documents; or

b. does not meet the requirements of any applicable inspection, reference standard, test, or approval referred to in the Contract Documents; or

c. has been damaged prior to Engineer's recommendation of final payment (unless responsibility for the protection thereof has been assumed by Owner at Substantial Completion in accordance with Paragraph 15.03 or 15.04).

E. *Furnish, Install, Perform, Provide*:

1. The word "furnish," when used in connection with services, materials, or equipment, shall mean to supply and deliver said services, materials, or equipment to the Site (or some other specified location) ready for use or installation and in usable or operable condition.

2. The word "install," when used in connection with services, materials, or equipment, shall mean to put into use or place in final position said services, materials, or equipment complete and ready for intended use.


**Copyright © 2013 National Society of Professional Engineers, American Council of Engineering Companies, and American Society of Civil Engineers. All rights reserved.**

3. The words “perform” or “provide,” when used in connection with services, materials, or equipment, shall mean to furnish and install said services, materials, or equipment complete and ready for intended use.

4. If the Contract Documents establish an obligation of Contractor with respect to specific services, materials, or equipment, but do not expressly use any of the four words “furnish,” “install,” “perform,” or “provide,” then Contractor shall furnish and install said services, materials, or equipment complete and ready for intended use.

F. Unless stated otherwise in the Contract Documents, words or phrases that have a well-known technical or construction industry or trade meaning are used in the Contract Documents in accordance with such recognized meaning.

**ARTICLE 2 – PRELIMINARY MATTERS**

2.01 *Delivery of Bonds and Evidence of Insurance*

A. *Bonds*: When Contractor delivers the executed counterparts of the Agreement to Owner, Contractor shall also deliver to Owner such bonds as Contractor may be required to furnish.

B. *Evidence of Contractor’s Insurance*: When Contractor delivers the executed counterparts of the Agreement to Owner, Contractor shall also deliver to Owner, with copies to each named insured and additional insured (as identified in the Supplementary Conditions or elsewhere in the Contract), the certificates and other evidence of insurance required to be provided by Contractor in accordance with Article 6.

C. *Evidence of Owner’s Insurance*: After receipt of the executed counterparts of the Agreement and all required bonds and insurance documentation, Owner shall promptly deliver to Contractor, with copies to each named insured and additional insured (as identified in the Supplementary Conditions or otherwise), the certificates and other evidence of insurance required to be provided by Owner under Article 6.

2.02 *Copies of Documents*

A. Owner shall furnish to Contractor four printed copies of the Contract (including one fully executed counterpart of the Agreement), and one copy in electronic portable document format (PDF). Additional printed copies will be furnished upon request at the cost of reproduction.

B. Owner shall maintain and safeguard at least one original printed record version of the Contract, including Drawings and Specifications signed and sealed by Engineer and other design professionals. Owner shall make such original printed record version of the Contract available to Contractor for review. Owner may delegate the responsibilities under this provision to Engineer.

2.03 *Before Starting Construction*

A. *Preliminary Schedules*: Within 10 days after the Effective Date of the Contract (or as otherwise specifically required by the Contract Documents), Contractor shall submit to Engineer for timely review:

1. a preliminary Progress Schedule indicating the times (numbers of days or dates) for starting and completing the various stages of the Work, including any Milestones specified in the Contract;

2. a preliminary Schedule of Submittals; and


**Copyright © 2013 National Society of Professional Engineers, American Council of Engineering Companies, and American Society of Civil Engineers. All rights reserved.**

3. a preliminary Schedule of Values for all of the Work which includes quantities and prices of items which when added together equal the Contract Price and subdivides the Work into component parts in sufficient detail to serve as the basis for progress payments during performance of the Work. Such prices will include an appropriate amount of overhead and profit applicable to each item of Work.

2.04 *Preconstruction Conference; Designation of Authorized Representatives*

A. Before any Work at the Site is started, a conference attended by Owner, Contractor, Engineer, and others as appropriate will be held to establish a working understanding among the parties as to the Work and to discuss the schedules referred to in Paragraph 2.03.A, procedures for handling Shop Drawings, Samples, and other submittals, processing Applications for Payment, electronic or digital transmittals, and maintaining required records.

B. At this conference Owner and Contractor each shall designate, in writing, a specific individual to act as its authorized representative with respect to the services and responsibilities under the Contract. Such individuals shall have the authority to transmit and receive information, render decisions relative to the Contract, and otherwise act on behalf of each respective party.

2.05 *Initial Acceptance of Schedules*

A. At least 10 days before submission of the first Application for Payment a conference, attended by Contractor, Engineer, and others as appropriate, will be held to review for acceptability to Engineer as provided below the schedules submitted in accordance with Paragraph 2.03.A. Contractor shall have an additional 10 days to make corrections and adjustments and to complete and resubmit the schedules. No progress payment shall be made to Contractor until acceptable schedules are submitted to Engineer.

1. The Progress Schedule will be acceptable to Engineer if it provides an orderly progression of the Work to completion within the Contract Times. Such acceptance will not impose on Engineer responsibility for the Progress Schedule, for sequencing, scheduling, or progress of the Work, nor interfere with or relieve Contractor from Contractor's full responsibility therefor.

2. Contractor's Schedule of Submittals will be acceptable to Engineer if it provides a workable arrangement for reviewing and processing the required submittals.

3. Contractor's Schedule of Values will be acceptable to Engineer as to form and substance if it provides a reasonable allocation of the Contract Price to the component parts of the Work.

2.06 *Electronic Transmittals*

A. Except as otherwise stated elsewhere in the Contract, the Owner, Engineer, and Contractor may transmit, and shall accept, Project-related correspondence, text, data, documents, drawings, information, and graphics, including but not limited to Shop Drawings and other submittals, in electronic media or digital format, either directly, or through access to a secure Project website.

B. If the Contract does not establish protocols for electronic or digital transmittals, then Owner, Engineer, and Contractor shall jointly develop such protocols.

C. When transmitting items in electronic media or digital format, the transmitting party makes no representations as to long term compatibility, usability, or readability of the items resulting from the recipient's use of software application packages, operating systems, or


**Copyright © 2013 National Society of Professional Engineers, American Council of Engineering Companies, and American Society of Civil Engineers. All rights reserved.**

computer hardware differing from those used in the drafting or transmittal of the items, or from those established in applicable transmittal protocols.

**ARTICLE 3 – DOCUMENTS: INTENT, REQUIREMENTS, REUSE**

3.01 *Intent*

A. The Contract Documents are complementary; what is required by one is as binding as if required by all.

B. It is the intent of the Contract Documents to describe a functionally complete project (or part thereof) to be constructed in accordance with the Contract Documents.

C. Unless otherwise stated in the Contract Documents, if there is a discrepancy between the electronic or digital versions of the Contract Documents (including any printed copies derived from such electronic or digital versions) and the printed record version, the printed record version shall govern.

D. The Contract supersedes prior negotiations, representations, and agreements, whether written or oral.

E. Engineer will issue clarifications and interpretations of the Contract Documents as provided herein.

3.02 *Reference Standards*

A. Standards Specifications, Codes, Laws and Regulations

1. Reference in the Contract Documents to standard specifications, manuals, reference standards, or codes of any technical society, organization, or association, or to Laws or Regulations, whether such reference be specific or by implication, shall mean the standard specification, manual, reference standard, code, or Laws or Regulations in effect at the time of opening of Bids (or on the Effective Date of the Contract if there were no Bids), except as may be otherwise specifically stated in the Contract Documents.

2. No provision of any such standard specification, manual, reference standard, or code, or any instruction of a Supplier, shall be effective to change the duties or responsibilities of Owner, Contractor, or Engineer, or any of their subcontractors, consultants, agents, or employees, from those set forth in the part of the Contract Documents prepared by or for Engineer. No such provision or instruction shall be effective to assign to Owner, Engineer, or any of their officers, directors, members, partners, employees, agents, consultants, or subcontractors, any duty or authority to supervise or direct the performance of the Work or any duty or authority to undertake responsibility inconsistent with the provisions of the part of the Contract Documents prepared by or for Engineer.

3.03 *Reporting and Resolving Discrepancies*

A. *Reporting Discrepancies*:

1. *Contractor's Verification of Figures and Field Measurements*: Before undertaking each part of the Work, Contractor shall carefully study the Contract Documents, and check and verify pertinent figures and dimensions therein, particularly with respect to applicable field measurements. Contractor shall promptly report in writing to Engineer any conflict, error, ambiguity, or discrepancy that Contractor discovers, or has actual knowledge of, and shall not proceed with any Work affected thereby until the conflict,


**Copyright © 2013 National Society of Professional Engineers, American Council of Engineering Companies, and American Society of Civil Engineers. All rights reserved.**

error, ambiguity, or discrepancy is resolved, by a clarification or interpretation by Engineer, or by an amendment or supplement to the Contract Documents issued pursuant to Paragraph 11.01.

2. *Contractor's Review of Contract Documents*: If, before or during the performance of the Work, Contractor discovers any conflict, error, ambiguity, or discrepancy within the Contract Documents, or between the Contract Documents and (a) any applicable Law or Regulation, (b) actual field conditions, (c) any standard specification, manual, reference standard, or code, or (d) any instruction of any Supplier, then Contractor shall promptly report it to Engineer in writing. Contractor shall not proceed with the Work affected thereby (except in an emergency as required by Paragraph 7.15) until the conflict, error, ambiguity, or discrepancy is resolved, by a clarification or interpretation by Engineer, or by an amendment or supplement to the Contract Documents issued pursuant to Paragraph 11.01.

3. Contractor shall not be liable to Owner or Engineer for failure to report any conflict, error, ambiguity, or discrepancy in the Contract Documents unless Contractor had actual knowledge thereof.

B. *Resolving Discrepancies*:

1. Except as may be otherwise specifically stated in the Contract Documents, the provisions of the part of the Contract Documents prepared by or for Engineer shall take precedence in resolving any conflict, error, ambiguity, or discrepancy between such provisions of the Contract Documents and:

a. the provisions of any standard specification, manual, reference standard, or code, or the instruction of any Supplier (whether or not specifically incorporated by reference as a Contract Document); or

b. the provisions of any Laws or Regulations applicable to the performance of the Work (unless such an interpretation of the provisions of the Contract Documents would result in violation of such Law or Regulation).

3.04 *Requirements of the Contract Documents*

A. During the performance of the Work and until final payment, Contractor and Owner shall submit to the Engineer all matters in question concerning the requirements of the Contract Documents (sometimes referred to as requests for information or interpretation—RFIs), or relating to the acceptability of the Work under the Contract Documents, as soon as possible after such matters arise. Engineer will be the initial interpreter of the requirements of the Contract Documents, and judge of the acceptability of the Work thereunder.

B. Engineer will, with reasonable promptness, render a written clarification, interpretation, or decision on the issue submitted, or initiate an amendment or supplement to the Contract Documents. Engineer's written clarification, interpretation, or decision will be final and binding on Contractor, unless it appeals by submitting a Change Proposal, and on Owner, unless it appeals by filing a Claim.

C. If a submitted matter in question concerns terms and conditions of the Contract Documents that do not involve (1) the performance or acceptability of the Work under the Contract Documents, (2) the design (as set forth in the Drawings, Specifications, or otherwise), or (3) other engineering or technical matters, then Engineer will promptly give written notice to Owner and Contractor that Engineer is unable to provide a decision or interpretation. If Owner and Contractor are unable to agree on resolution of such a matter in question, either party may pursue resolution as provided in Article 12.


**Copyright © 2013 National Society of Professional Engineers, American Council of Engineering Companies, and American Society of Civil Engineers. All rights reserved.**

3.05 *Reuse of Documents*

A. Contractor and its Subcontractors and Suppliers shall not:

1. have or acquire any title to or ownership rights in any of the Drawings, Specifications, or other documents (or copies of any thereof) prepared by or bearing the seal of Engineer or its consultants, including electronic media editions, or reuse any such Drawings, Specifications, other documents, or copies thereof on extensions of the Project or any other project without written consent of Owner and Engineer and specific written verification or adaptation by Engineer; or

2. have or acquire any title or ownership rights in any other Contract Documents, reuse any such Contract Documents for any purpose without Owner's express written consent, or violate any copyrights pertaining to such Contract Documents.

B. The prohibitions of this Paragraph 3.05 will survive final payment, or termination of the Contract. Nothing herein shall preclude Contractor from retaining copies of the Contract Documents for record purposes.

**ARTICLE 4 – COMMENCEMENT AND PROGRESS OF THE WORK**

4.01 *Commencement of Contract Times; Notice to Proceed*

A. The Contract Times will commence to run on the thirtieth day after the Effective Date of the Contract or, if a Notice to Proceed is given, on the day indicated in the Notice to Proceed. A Notice to Proceed may be given at any time within 30 days after the Effective Date of the Contract. In no event will the Contract Times commence to run later than the sixtieth day after the day of Bid opening or the thirtieth day after the Effective Date of the Contract, whichever date is earlier.

4.02 *Starting the Work*

A. Contractor shall start to perform the Work on the date when the Contract Times commence to run. No Work shall be done at the Site prior to such date.

4.03 *Reference Points*

A. Owner shall provide engineering surveys to establish reference points for construction which in Engineer's judgment are necessary to enable Contractor to proceed with the Work. Contractor shall be responsible for laying out the Work, shall protect and preserve the established reference points and property monuments, and shall make no changes or relocations without the prior written approval of Owner. Contractor shall report to Engineer whenever any reference point or property monument is lost or destroyed or requires relocation because of necessary changes in grades or locations, and shall be responsible for the accurate replacement or relocation of such reference points or property monuments by professionally qualified personnel.

4.04 *Progress Schedule*

A. Contractor shall adhere to the Progress Schedule established in accordance with Paragraph 2.05 as it may be adjusted from time to time as provided below.

1. Contractor shall submit to Engineer for acceptance (to the extent indicated in Paragraph 2.05) proposed adjustments in the Progress Schedule that will not result in changing the Contract Times.


**Copyright © 2013 National Society of Professional Engineers, American Council of Engineering Companies, and American Society of Civil Engineers. All rights reserved.**

2. Proposed adjustments in the Progress Schedule that will change the Contract Times shall be submitted in accordance with the requirements of Article 11.

B. Contractor shall carry on the Work and adhere to the Progress Schedule during all disputes or disagreements with Owner. No Work shall be delayed or postponed pending resolution of any disputes or disagreements, or during any appeal process, except as permitted by Paragraph 16.04, or as Owner and Contractor may otherwise agree in writing.

4.05 *Delays in Contractor's Progress*

A. If Owner, Engineer, or anyone for whom Owner is responsible, delays, disrupts, or interferes with the performance or progress of the Work, then Contractor shall be entitled to an equitable adjustment in the Contract Times and Contract Price. Contractor's entitlement to an adjustment of the Contract Times is conditioned on such adjustment being essential to Contractor's ability to complete the Work within the Contract Times.

B. Contractor shall not be entitled to an adjustment in Contract Price or Contract Times for delay, disruption, or interference caused by or within the control of Contractor. Delay, disruption, and interference attributable to and within the control of a Subcontractor or Supplier shall be deemed to be within the control of Contractor.

C. If Contractor's performance or progress is delayed, disrupted, or interfered with by unanticipated causes not the fault of and beyond the control of Owner, Contractor, and those for which they are responsible, then Contractor shall be entitled to an equitable adjustment in Contract Times. Contractor's entitlement to an adjustment of the Contract Times is conditioned on such adjustment being essential to Contractor's ability to complete the Work within the Contract Times. Such an adjustment shall be Contractor's sole and exclusive remedy for the delays, disruption, and interference described in this paragraph. Causes of delay, disruption, or interference that may give rise to an adjustment in Contract Times under this paragraph include but are not limited to the following:

1. severe and unavoidable natural catastrophes such as fires, floods, epidemics, and earthquakes;

2. abnormal weather conditions;

3. acts or failures to act of utility owners (other than those performing other work at or adjacent to the Site by arrangement with the Owner, as contemplated in Article 8); and

4. acts of war or terrorism.

D. Delays, disruption, and interference to the performance or progress of the Work resulting from the existence of a differing subsurface or physical condition, an Underground Facility that was not shown or indicated by the Contract Documents, or not shown or indicated with reasonable accuracy, and those resulting from Hazardous Environmental Conditions, are governed by Article 5.

E. Paragraph 8.03 governs delays, disruption, and interference to the performance or progress of the Work resulting from the performance of certain other work at or adjacent to the Site.

F. Contractor shall not be entitled to an adjustment in Contract Price or Contract Times for any delay, disruption, or interference if such delay is concurrent with a delay, disruption, or interference caused by or within the control of Contractor.


**Copyright © 2013 National Society of Professional Engineers, American Council of Engineering Companies, and American Society of Civil Engineers. All rights reserved.**

G. Contractor must submit any Change Proposal seeking an adjustment in Contract Price or Contract Times under this paragraph within 30 days of the commencement of the delaying, disrupting, or interfering event.

**ARTICLE 5 – AVAILABILITY OF LANDS; SUBSURFACE AND PHYSICAL CONDITIONS; HAZARDOUS ENVIRONMENTAL CONDITIONS**

5.01 *Availability of Lands*

A. Owner shall furnish the Site. Owner shall notify Contractor of any encumbrances or restrictions not of general application but specifically related to use of the Site with which Contractor must comply in performing the Work.

B. Upon reasonable written request, Owner shall furnish Contractor with a current statement of record legal title and legal description of the lands upon which permanent improvements are to be made and Owner's interest therein as necessary for giving notice of or filing a mechanic's or construction lien against such lands in accordance with applicable Laws and Regulations.

C. Contractor shall provide for all additional lands and access thereto that may be required for temporary construction facilities or storage of materials and equipment.

5.02 *Use of Site and Other Areas*

A. *Limitation on Use of Site and Other Areas*:

1. Contractor shall confine construction equipment, temporary construction facilities, the storage of materials and equipment, and the operations of workers to the Site, adjacent areas that Contractor has arranged to use through construction easements or otherwise, and other adjacent areas permitted by Laws and Regulations, and shall not unreasonably encumber the Site and such other adjacent areas with construction equipment or other materials or equipment. Contractor shall assume full responsibility for (a) damage to the Site; (b) damage to any such other adjacent areas used for Contractor's operations; (c) damage to any other adjacent land or areas; and (d) for injuries and losses sustained by the owners or occupants of any such land or areas; provided that such damage or injuries result from the performance of the Work or from other actions or conduct of the Contractor or those for which Contractor is responsible.

2. If a damage or injury claim is made by the owner or occupant of any such land or area because of the performance of the Work, or because of other actions or conduct of the Contractor or those for which Contractor is responsible, Contractor shall (a) take immediate corrective or remedial action as required by Paragraph 7.12, or otherwise; (b) promptly attempt to settle the claim as to all parties through negotiations with such owner or occupant, or otherwise resolve the claim by arbitration or other dispute resolution proceeding, or at law; and (c) to the fullest extent permitted by Laws and Regulations, indemnify and hold harmless Owner and Engineer, and the officers, directors, members, partners, employees, agents, consultants and subcontractors of each and any of them from and against any such claim, and against all costs, losses, and damages (including but not limited to all fees and charges of engineers, architects, attorneys, and other professionals and all court or arbitration or other dispute resolution costs) arising out of or relating to any claim or action, legal or equitable, brought by any such owner or occupant against Owner, Engineer, or any other party indemnified hereunder to the extent caused directly or indirectly, in whole or in part


**Copyright © 2013 National Society of Professional Engineers, American Council of Engineering Companies, and American Society of Civil Engineers. All rights reserved.**

by, or based upon, Contractor's performance of the Work, or because of other actions or conduct of the Contractor or those for which Contractor is responsible.

B. *Removal of Debris During Performance of the Work*: During the progress of the Work the Contractor shall keep the Site and other adjacent areas free from accumulations of waste materials, rubbish, and other debris. Removal and disposal of such waste materials, rubbish, and other debris shall conform to applicable Laws and Regulations.

C. *Cleaning*: Prior to Substantial Completion of the Work Contractor shall clean the Site and the Work and make it ready for utilization by Owner. At the completion of the Work Contractor shall remove from the Site and adjacent areas all tools, appliances, construction equipment and machinery, and surplus materials and shall restore to original condition all property not designated for alteration by the Contract Documents.

D. *Loading of Structures*: Contractor shall not load nor permit any part of any structure to be loaded in any manner that will endanger the structure, nor shall Contractor subject any part of the Work or adjacent structures or land to stresses or pressures that will endanger them.

5.03 *Subsurface and Physical Conditions*

A. *Reports and Drawings*: The Supplementary Conditions identify:

1. those reports known to Owner of explorations and tests of subsurface conditions at or adjacent to the Site;

2. those drawings known to Owner of physical conditions relating to existing surface or subsurface structures at the Site (except Underground Facilities); and

3. Technical Data contained in such reports and drawings.

B. *Reliance by Contractor on Technical Data Authorized*: Contractor may rely upon the accuracy of the Technical Data expressly identified in the Supplementary Conditions with respect to such reports and drawings, but such reports and drawings are not Contract Documents. If no such express identification has been made, then Contractor may rely upon the accuracy of the Technical Data (as defined in Article 1) contained in any geotechnical or environmental report prepared for the Project and made available to Contractor. Except for such reliance on Technical Data, Contractor may not rely upon or make any claim against Owner or Engineer, or any of their officers, directors, members, partners, employees, agents, consultants, or subcontractors, with respect to:

1. the completeness of such reports and drawings for Contractor's purposes, including, but not limited to, any aspects of the means, methods, techniques, sequences, and procedures of construction to be employed by Contractor, and safety precautions and programs incident thereto; or

2. other data, interpretations, opinions, and information contained in such reports or shown or indicated in such drawings; or

3. any Contractor interpretation of or conclusion drawn from any Technical Data or any such other data, interpretations, opinions, or information.


**Copyright © 2013 National Society of Professional Engineers, American Council of Engineering Companies, and American Society of Civil Engineers. All rights reserved.**

5.04 *Differing Subsurface or Physical Conditions*

A. *Notice by Contractor*: If Contractor believes that any subsurface or physical condition that is uncovered or revealed at the Site either:

1. is of such a nature as to establish that any Technical Data on which Contractor is entitled to rely as provided in Paragraph 5.03 is materially inaccurate; or

2. is of such a nature as to require a change in the Drawings or Specifications; or

3. differs materially from that shown or indicated in the Contract Documents; or

4. is of an unusual nature, and differs materially from conditions ordinarily encountered and generally recognized as inherent in work of the character provided for in the Contract Documents;

then Contractor shall, promptly after becoming aware thereof and before further disturbing the subsurface or physical conditions or performing any Work in connection therewith (except in an emergency as required by Paragraph 7.15), notify Owner and Engineer in writing about such condition. Contractor shall not further disturb such condition or perform any Work in connection therewith (except with respect to an emergency) until receipt of a written statement permitting Contractor to do so.

B. *Engineer's Review*: After receipt of written notice as required by the preceding paragraph, Engineer will promptly review the subsurface or physical condition in question; determine the necessity of Owner's obtaining additional exploration or tests with respect to the condition; conclude whether the condition falls within any one or more of the differing site condition categories in Paragraph 5.04.A above; obtain any pertinent cost or schedule information from Contractor; prepare recommendations to Owner regarding the Contractor's resumption of Work in connection with the subsurface or physical condition in question and the need for any change in the Drawings or Specifications; and advise Owner in writing of Engineer's findings, conclusions, and recommendations.

C. *Owner's Statement to Contractor Regarding Site Condition*: After receipt of Engineer's written findings, conclusions, and recommendations, Owner shall issue a written statement to Contractor (with a copy to Engineer) regarding the subsurface or physical condition in question, addressing the resumption of Work in connection with such condition, indicating whether any change in the Drawings or Specifications will be made, and adopting or rejecting Engineer's written findings, conclusions, and recommendations, in whole or in part.

D. *Possible Price and Times Adjustments*:

1. Contractor shall be entitled to an equitable adjustment in Contract Price or Contract Times, or both, to the extent that the existence of a differing subsurface or physical condition, or any related delay, disruption, or interference, causes an increase or decrease in Contractor's cost of, or time required for, performance of the Work; subject, however, to the following:

a. such condition must fall within any one or more of the categories described in Paragraph 5.04.A;

b. with respect to Work that is paid for on a unit price basis, any adjustment in Contract Price will be subject to the provisions of Paragraph 13.03; and,


**Copyright © 2013 National Society of Professional Engineers, American Council of Engineering Companies, and American Society of Civil Engineers. All rights reserved.**

c. Contractor's entitlement to an adjustment of the Contract Times is conditioned on such adjustment being essential to Contractor's ability to complete the Work within the Contract Times.

2. Contractor shall not be entitled to any adjustment in the Contract Price or Contract Times with respect to a subsurface or physical condition if:

a. Contractor knew of the existence of such condition at the time Contractor made a commitment to Owner with respect to Contract Price and Contract Times by the submission of a Bid or becoming bound under a negotiated contract, or otherwise; or

b. the existence of such condition reasonably could have been discovered or revealed as a result of any examination, investigation, exploration, test, or study of the Site and contiguous areas expressly required by the Bidding Requirements or Contract Documents to be conducted by or for Contractor prior to Contractor's making such commitment; or

c. Contractor failed to give the written notice as required by Paragraph 5.04.A.

3. If Owner and Contractor agree regarding Contractor's entitlement to and the amount or extent of any adjustment in the Contract Price or Contract Times, or both, then any such adjustment shall be set forth in a Change Order.

4. Contractor may submit a Change Proposal regarding its entitlement to or the amount or extent of any adjustment in the Contract Price or Contract Times, or both, no later than 30 days after Owner's issuance of the Owner's written statement to Contractor regarding the subsurface or physical condition in question.

5.05 *Underground Facilities*

A. *Contractor's Responsibilities*: The information and data shown or indicated in the Contract Documents with respect to existing Underground Facilities at or adjacent to the Site is based on information and data furnished to Owner or Engineer by the owners of such Underground Facilities, including Owner, or by others. Unless it is otherwise expressly provided in the Supplementary Conditions:

1. Owner and Engineer do not warrant or guarantee the accuracy or completeness of any such information or data provided by others; and

2. the cost of all of the following will be included in the Contract Price, and Contractor shall have full responsibility for:

a. reviewing and checking all information and data regarding existing Underground Facilities at the Site;

b. locating all Underground Facilities shown or indicated in the Contract Documents as being at the Site;

c. coordination of the Work with the owners (including Owner) of such Underground Facilities, during construction; and

d. the safety and protection of all existing Underground Facilities at the Site, and repairing any damage thereto resulting from the Work.

B. *Notice by Contractor*: If Contractor believes that an Underground Facility that is uncovered or revealed at the Site was not shown or indicated in the Contract Documents, or was not shown or indicated with reasonable accuracy, then Contractor shall, promptly after


**Copyright © 2013 National Society of Professional Engineers, American Council of Engineering Companies, and American Society of Civil Engineers. All rights reserved.**

becoming aware thereof and before further disturbing conditions affected thereby or performing any Work in connection therewith (except in an emergency as required by Paragraph 7.15), identify the owner of such Underground Facility and give written notice to that owner and to Owner and Engineer.

C. *Engineer's Review*: Engineer will promptly review the Underground Facility and conclude whether such Underground Facility was not shown or indicated in the Contract Documents, or was not shown or indicated with reasonable accuracy; obtain any pertinent cost or schedule information from Contractor; prepare recommendations to Owner regarding the Contractor's resumption of Work in connection with the Underground Facility in question; determine the extent, if any, to which a change is required in the Drawings or Specifications to reflect and document the consequences of the existence or location of the Underground Facility; and advise Owner in writing of Engineer's findings, conclusions, and recommendations. During such time, Contractor shall be responsible for the safety and protection of such Underground Facility.

D. *Owner's Statement to Contractor Regarding Underground Facility*: After receipt of Engineer's written findings, conclusions, and recommendations, Owner shall issue a written statement to Contractor (with a copy to Engineer) regarding the Underground Facility in question, addressing the resumption of Work in connection with such Underground Facility, indicating whether any change in the Drawings or Specifications will be made, and adopting or rejecting Engineer's written findings, conclusions, and recommendations in whole or in part.

E. *Possible Price and Times Adjustments*:

1. Contractor shall be entitled to an equitable adjustment in the Contract Price or Contract Times, or both, to the extent that any existing Underground Facility at the Site that was not shown or indicated in the Contract Documents, or was not shown or indicated with reasonable accuracy, or any related delay, disruption, or interference, causes an increase or decrease in Contractor's cost of, or time required for, performance of the Work; subject, however, to the following:

    a. Contractor did not know of and could not reasonably have been expected to be aware of or to have anticipated the existence or actual location of the Underground Facility in question;

    b. With respect to Work that is paid for on a unit price basis, any adjustment in Contract Price will be subject to the provisions of Paragraph 13.03;

    c. Contractor's entitlement to an adjustment of the Contract Times is conditioned on such adjustment being essential to Contractor's ability to complete the Work within the Contract Times; and

    d. Contractor gave the notice required in Paragraph 5.05.B.

2. If Owner and Contractor agree regarding Contractor's entitlement to and the amount or extent of any adjustment in the Contract Price or Contract Times, or both, then any such adjustment shall be set forth in a Change Order.

3. Contractor may submit a Change Proposal regarding its entitlement to or the amount or extent of any adjustment in the Contract Price or Contract Times, or both, no later than 30 days after Owner's issuance of the Owner's written statement to Contractor regarding the Underground Facility in question.


**Copyright © 2013 National Society of Professional Engineers, American Council of Engineering Companies, and American Society of Civil Engineers. All rights reserved.**

5.06 *Hazardous Environmental Conditions at Site*

A. *Reports and Drawings*: The Supplementary Conditions identify:

1. those reports and drawings known to Owner relating to Hazardous Environmental Conditions that have been identified at or adjacent to the Site; and

2. Technical Data contained in such reports and drawings.

B. *Reliance by Contractor on Technical Data Authorized*: Contractor may rely upon the accuracy of the Technical Data expressly identified in the Supplementary Conditions with respect to such reports and drawings, but such reports and drawings are not Contract Documents. If no such express identification has been made, then Contractor may rely on the accuracy of the Technical Data (as defined in Article 1) contained in any geotechnical or environmental report prepared for the Project and made available to Contractor. Except for such reliance on Technical Data, Contractor may not rely upon or make any claim against Owner or Engineer, or any of their officers, directors, members, partners, employees, agents, consultants, or subcontractors with respect to:

1. the completeness of such reports and drawings for Contractor's purposes, including, but not limited to, any aspects of the means, methods, techniques, sequences and procedures of construction to be employed by Contractor and safety precautions and programs incident thereto; or

2. other data, interpretations, opinions and information contained in such reports or shown or indicated in such drawings; or

3. any Contractor interpretation of or conclusion drawn from any Technical Data or any such other data, interpretations, opinions or information.

C. Contractor shall not be responsible for removing or remediating any Hazardous Environmental Condition encountered, uncovered, or revealed at the Site unless such removal or remediation is expressly identified in the Contract Documents to be within the scope of the Work.

D. Contractor shall be responsible for controlling, containing, and duly removing all Constituents of Concern brought to the Site by Contractor, Subcontractors, Suppliers, or anyone else for whom Contractor is responsible, and for any associated costs; and for the costs of removing and remediating any Hazardous Environmental Condition created by the presence of any such Constituents of Concern.

E. If Contractor encounters, uncovers, or reveals a Hazardous Environmental Condition whose removal or remediation is not expressly identified in the Contract Documents as being within the scope of the Work, or if Contractor or anyone for whom Contractor is responsible creates a Hazardous Environmental Condition, then Contractor shall immediately: (1) secure or otherwise isolate such condition; (2) stop all Work in connection with such condition and in any area affected thereby (except in an emergency as required by Paragraph 7.15); and (3) notify Owner and Engineer (and promptly thereafter confirm such notice in writing). Owner shall promptly consult with Engineer concerning the necessity for Owner to retain a qualified expert to evaluate such condition or take corrective action, if any. Promptly after consulting with Engineer, Owner shall take such actions as are necessary to permit Owner to timely obtain required permits and provide Contractor the written notice required by Paragraph 5.06.F. If Contractor or anyone for whom Contractor is responsible created the Hazardous Environmental Condition in question, then Owner may remove and remediate the Hazardous Environmental Condition, and impose a set-off against payments to account for the associated costs.


**Copyright © 2013 National Society of Professional Engineers, American Council of Engineering Companies, and American Society of Civil Engineers. All rights reserved.**

F. Contractor shall not resume Work in connection with such Hazardous Environmental Condition or in any affected area until after Owner has obtained any required permits related thereto, and delivered written notice to Contractor either (1) specifying that such condition and any affected area is or has been rendered safe for the resumption of Work, or (2) specifying any special conditions under which such Work may be resumed safely.

G. If Owner and Contractor cannot agree as to entitlement to or on the amount or extent, if any, of any adjustment in Contract Price or Contract Times, or both, as a result of such Work stoppage or such special conditions under which Work is agreed to be resumed by Contractor, then within 30 days of Owner's written notice regarding the resumption of Work, Contractor may submit a Change Proposal, or Owner may impose a set-off.

H. If after receipt of such written notice Contractor does not agree to resume such Work based on a reasonable belief it is unsafe, or does not agree to resume such Work under such special conditions, then Owner may order the portion of the Work that is in the area affected by such condition to be deleted from the Work, following the contractual change procedures in Article 11. Owner may have such deleted portion of the Work performed by Owner's own forces or others in accordance with Article 8.

I. To the fullest extent permitted by Laws and Regulations, Owner shall indemnify and hold harmless Contractor, Subcontractors, and Engineer, and the officers, directors, members, partners, employees, agents, consultants, and subcontractors of each and any of them from and against all claims, costs, losses, and damages (including but not limited to all fees and charges of engineers, architects, attorneys, and other professionals and all court or arbitration or other dispute resolution costs) arising out of or relating to a Hazardous Environmental Condition, provided that such Hazardous Environmental Condition (1) was not shown or indicated in the Drawings, Specifications, or other Contract Documents, identified as Technical Data entitled to limited reliance pursuant to Paragraph 5.06.B, or identified in the Contract Documents to be included within the scope of the Work, and (2) was not created by Contractor or by anyone for whom Contractor is responsible. Nothing in this Paragraph 5.06.I shall obligate Owner to indemnify any individual or entity from and against the consequences of that individual's or entity's own negligence.

J. To the fullest extent permitted by Laws and Regulations, Contractor shall indemnify and hold harmless Owner and Engineer, and the officers, directors, members, partners, employees, agents, consultants, and subcontractors of each and any of them from and against all claims, costs, losses, and damages (including but not limited to all fees and charges of engineers, architects, attorneys, and other professionals and all court or arbitration or other dispute resolution costs) arising out of or relating to the failure to control, contain, or remove a Constituent of Concern brought to the Site by Contractor or by anyone for whom Contractor is responsible, or to a Hazardous Environmental Condition created by Contractor or by anyone for whom Contractor is responsible. Nothing in this Paragraph 5.06.J shall obligate Contractor to indemnify any individual or entity from and against the consequences of that individual's or entity's own negligence.

K. The provisions of Paragraphs 5.03, 5.04, and 5.05 do not apply to the presence of Constituents of Concern or to a Hazardous Environmental Condition uncovered or revealed at the Site.


**Copyright © 2013 National Society of Professional Engineers, American Council of Engineering Companies, and American Society of Civil Engineers. All rights reserved.**

## ARTICLE 6 – BONDS AND INSURANCE

6.01 *Performance, Payment, and Other Bonds*

A. Contractor shall furnish a performance bond and a payment bond, each in an amount at least equal to the Contract Price, as security for the faithful performance and payment of all of Contractor's obligations under the Contract. These bonds shall remain in effect until one year after the date when final payment becomes due or until completion of the correction period specified in Paragraph 15.08, whichever is later, except as provided otherwise by Laws or Regulations, the Supplementary Conditions, or other specific provisions of the Contract. Contractor shall also furnish such other bonds as are required by the Supplementary Conditions or other specific provisions of the Contract.

B. All bonds shall be in the form prescribed by the Contract except as provided otherwise by Laws or Regulations, and shall be executed by such sureties as are named in "Companies Holding Certificates of Authority as Acceptable Sureties on Federal Bonds and as Acceptable Reinsuring Companies" as published in Circular 570 (as amended and supplemented) by the Financial Management Service, Surety Bond Branch, U.S. Department of the Treasury. A bond signed by an agent or attorney-in-fact must be accompanied by a certified copy of that individual's authority to bind the surety. The evidence of authority shall show that it is effective on the date the agent or attorney-in-fact signed the accompanying bond.

C. Contractor shall obtain the required bonds from surety companies that are duly licensed or authorized in the jurisdiction in which the Project is located to issue bonds in the required amounts.

D. If the surety on a bond furnished by Contractor is declared bankrupt or becomes insolvent, or its right to do business is terminated in any state or jurisdiction where any part of the Project is located, or the surety ceases to meet the requirements above, then Contractor shall promptly notify Owner and Engineer and shall, within 20 days after the event giving rise to such notification, provide another bond and surety, both of which shall comply with the bond and surety requirements above.

E. If Contractor has failed to obtain a required bond, Owner may exclude the Contractor from the Site and exercise Owner's termination rights under Article 16.

F. Upon request, Owner shall provide a copy of the payment bond to any Subcontractor, Supplier, or other person or entity claiming to have furnished labor or materials used in the performance of the Work.

6.02 *Insurance—General Provisions*

A. Owner and Contractor shall obtain and maintain insurance as required in this Article and in the Supplementary Conditions.

B. All insurance required by the Contract to be purchased and maintained by Owner or Contractor shall be obtained from insurance companies that are duly licensed or authorized, in the state or jurisdiction in which the Project is located, to issue insurance policies for the required limits and coverages. Unless a different standard is indicated in the Supplementary Conditions, all companies that provide insurance policies required under this Contract shall have an A.M. Best rating of A-VII or better.

C. Contractor shall deliver to Owner, with copies to each named insured and additional insured (as identified in this Article, in the Supplementary Conditions, or elsewhere in the Contract), certificates of insurance establishing that Contractor has obtained and is


**Copyright © 2013 National Society of Professional Engineers, American Council of Engineering Companies, and American Society of Civil Engineers. All rights reserved.**

maintaining the policies, coverages, and endorsements required by the Contract. Upon request by Owner or any other insured, Contractor shall also furnish other evidence of such required insurance, including but not limited to copies of policies and endorsements, and documentation of applicable self-insured retentions and deductibles. Contractor may block out (redact) any confidential premium or pricing information contained in any policy or endorsement furnished under this provision.

D. Owner shall deliver to Contractor, with copies to each named insured and additional insured (as identified in this Article, the Supplementary Conditions, or elsewhere in the Contract), certificates of insurance establishing that Owner has obtained and is maintaining the policies, coverages, and endorsements required of Owner by the Contract (if any). Upon request by Contractor or any other insured, Owner shall also provide other evidence of such required insurance (if any), including but not limited to copies of policies and endorsements, and documentation of applicable self-insured retentions and deductibles. Owner may block out (redact) any confidential premium or pricing information contained in any policy or endorsement furnished under this provision.

E. Failure of Owner or Contractor to demand such certificates or other evidence of the other party's full compliance with these insurance requirements, or failure of Owner or Contractor to identify a deficiency in compliance from the evidence provided, shall not be construed as a waiver of the other party's obligation to obtain and maintain such insurance.

F. If either party does not purchase or maintain all of the insurance required of such party by the Contract, such party shall notify the other party in writing of such failure to purchase prior to the start of the Work, or of such failure to maintain prior to any change in the required coverage.

G. If Contractor has failed to obtain and maintain required insurance, Owner may exclude the Contractor from the Site, impose an appropriate set-off against payment, and exercise Owner's termination rights under Article 16.

H. Without prejudice to any other right or remedy, if a party has failed to obtain required insurance, the other party may elect to obtain equivalent insurance to protect such other party's interests at the expense of the party who was required to provide such coverage, and the Contract Price shall be adjusted accordingly.

I. Owner does not represent that insurance coverage and limits established in this Contract necessarily will be adequate to protect Contractor or Contractor's interests.

J. The insurance and insurance limits required herein shall not be deemed as a limitation on Contractor's liability under the indemnities granted to Owner and other individuals and entities in the Contract.

6.03 *Contractor's Insurance*

A. *Workers' Compensation*: Contractor shall purchase and maintain workers' compensation and employer's liability insurance for:

1. claims under workers' compensation, disability benefits, and other similar employee benefit acts.

2. United States Longshoreman and Harbor Workers' Compensation Act and Jones Act coverage (if applicable).

3. claims for damages because of bodily injury, occupational sickness or disease, or death of Contractor's employees (by stop-gap endorsement in monopolist worker's compensation states).


**Copyright © 2013 National Society of Professional Engineers, American Council of Engineering Companies, and American Society of Civil Engineers. All rights reserved.**

4. Foreign voluntary worker compensation (if applicable).

B. *Commercial General Liability—Claims Covered*: Contractor shall purchase and maintain commercial general liability insurance, covering all operations by or on behalf of Contractor, on an occurrence basis, against:

1. claims for damages because of bodily injury, sickness or disease, or death of any person other than Contractor's employees.

2. claims for damages insured by reasonably available personal injury liability coverage.

3. claims for damages, other than to the Work itself, because of injury to or destruction of tangible property wherever located, including loss of use resulting therefrom.

C. *Commercial General Liability—Form and Content*: Contractor's commercial liability policy shall be written on a 1996 (or later) ISO commercial general liability form (occurrence form) and include the following coverages and endorsements:

1. Products and completed operations coverage:

a. Such insurance shall be maintained for three years after final payment.

b. Contractor shall furnish Owner and each other additional insured (as identified in the Supplementary Conditions or elsewhere in the Contract) evidence of continuation of such insurance at final payment and three years thereafter.

2. Blanket contractual liability coverage, to the extent permitted by law, including but not limited to coverage of Contractor's contractual indemnity obligations in Paragraph 7.18.

3. Broad form property damage coverage.

4. Severability of interest.

5. Underground, explosion, and collapse coverage.

6. Personal injury coverage.

7. Additional insured endorsements that include both ongoing operations and products and completed operations coverage through ISO Endorsements CG 20 10 10 01 and CG 20 37 10 01 (together); or CG 20 10 07 04 and CG 20 37 07 04 (together); or their equivalent.

8. For design professional additional insureds, ISO Endorsement CG 20 32 07 04, "Additional Insured—Engineers, Architects or Surveyors Not Engaged by the Named Insured" or its equivalent.

D. *Automobile liability*: Contractor shall purchase and maintain automobile liability insurance against claims for damages because of bodily injury or death of any person or property damage arising out of the ownership, maintenance, or use of any motor vehicle. The automobile liability policy shall be written on an occurrence basis.

E. *Umbrella or excess liability*: Contractor shall purchase and maintain umbrella or excess liability insurance written over the underlying employer's liability, commercial general liability, and automobile liability insurance described in the paragraphs above. Subject to industry-standard exclusions, the coverage afforded shall follow form as to each and every one of the underlying policies.

F. *Contractor's pollution liability insurance*: Contractor shall purchase and maintain a policy covering third-party injury and property damage claims, including clean-up costs, as a result


**Copyright © 2013 National Society of Professional Engineers, American Council of Engineering Companies, and American Society of Civil Engineers. All rights reserved.**

of pollution conditions arising from Contractor's operations and completed operations. This insurance shall be maintained for no less than three years after final completion.

G. *Additional insureds*: The Contractor's commercial general liability, automobile liability, umbrella or excess, and pollution liability policies shall include and list as additional insureds Owner and Engineer, and any individuals or entities identified in the Supplementary Conditions; include coverage for the respective officers, directors, members, partners, employees, agents, consultants, and subcontractors of each and any of all such additional insureds; and the insurance afforded to these additional insureds shall provide primary coverage for all claims covered thereby (including as applicable those arising from both ongoing and completed operations) on a non-contributory basis. Contractor shall obtain all necessary endorsements to support these requirements.

H. *Contractor's professional liability insurance*: If Contractor will provide or furnish professional services under this Contract, through a delegation of professional design services or otherwise, then Contractor shall be responsible for purchasing and maintaining applicable professional liability insurance. This insurance shall provide protection against claims arising out of performance of professional design or related services, and caused by a negligent error, omission, or act for which the insured party is legally liable. It shall be maintained throughout the duration of the Contract and for a minimum of two years after Substantial Completion. If such professional design services are performed by a Subcontractor, and not by Contractor itself, then the requirements of this paragraph may be satisfied through the purchasing and maintenance of such insurance by such Subcontractor.

I. *General provisions*: The policies of insurance required by this Paragraph 6.03 shall:

1. include at least the specific coverages provided in this Article.

2. be written for not less than the limits of liability provided in this Article and in the Supplementary Conditions, or required by Laws or Regulations, whichever is greater.

3. contain a provision or endorsement that the coverage afforded will not be canceled, materially changed, or renewal refused until at least 10 days prior written notice has been given to Contractor. Within three days of receipt of any such written notice, Contractor shall provide a copy of the notice to Owner, Engineer, and each other insured under the policy.

4. remain in effect at least until final payment (and longer if expressly required in this Article) and at all times thereafter when Contractor may be correcting, removing, or replacing defective Work as a warranty or correction obligation, or otherwise, or returning to the Site to conduct other tasks arising from the Contract Documents.

5. be appropriate for the Work being performed and provide protection from claims that may arise out of or result from Contractor's performance of the Work and Contractor's other obligations under the Contract Documents, whether it is to be performed by Contractor, any Subcontractor or Supplier, or by anyone directly or indirectly employed by any of them to perform any of the Work, or by anyone for whose acts any of them may be liable.

J. The coverage requirements for specific policies of insurance must be met by such policies, and not by reference to excess or umbrella insurance provided in other policies.


**Copyright © 2013 National Society of Professional Engineers, American Council of Engineering Companies, and American Society of Civil Engineers. All rights reserved.**

6.04 *Owner's Liability Insurance*

A. In addition to the insurance required to be provided by Contractor under Paragraph 6.03, Owner, at Owner's option, may purchase and maintain at Owner's expense Owner's own liability insurance as will protect Owner against claims which may arise from operations under the Contract Documents.

B. Owner's liability policies, if any, operate separately and independently from policies required to be provided by Contractor, and Contractor cannot rely upon Owner's liability policies for any of Contractor's obligations to the Owner, Engineer, or third parties.

6.05 *Property Insurance*

A. *Builder's Risk*: Unless otherwise provided in the Supplementary Conditions, Contractor shall purchase and maintain builder's risk insurance upon the Work on a completed value basis, in the amount of the full insurable replacement cost thereof (subject to such deductible amounts as may be provided in the Supplementary Conditions or required by Laws and Regulations). This insurance shall:

1. include the Owner and Contractor as named insureds, and all Subcontractors, and any individuals or entities required by the Supplementary Conditions to be insured under such builder's risk policy, as insureds or named insureds. For purposes of the remainder of this Paragraph 6.05, Paragraphs 6.06 and 6.07, and any corresponding Supplementary Conditions, the parties required to be insured shall collectively be referred to as "insureds."

2. be written on a builder's risk "all risk" policy form that shall at least include insurance for physical loss or damage to the Work, temporary buildings, falsework, and materials and equipment in transit, and shall insure against at least the following perils or causes of loss: fire; lightning; windstorm; riot; civil commotion; terrorism; vehicle impact; aircraft; smoke; theft; vandalism and malicious mischief; mechanical breakdown, boiler explosion, and artificially generated electric current; earthquake; volcanic activity, and other earth movement; flood; collapse; explosion; debris removal; demolition occasioned by enforcement of Laws and Regulations; water damage (other than that caused by flood); and such other perils or causes of loss as may be specifically required by the Supplementary Conditions. If insurance against mechanical breakdown, boiler explosion, and artificially generated electric current; earthquake; volcanic activity, and other earth movement; or flood, are not commercially available under builder's risk policies, by endorsement or otherwise, such insurance may be provided through other insurance policies acceptable to Owner and Contractor.

3. cover, as insured property, at least the following: (a) the Work and all materials, supplies, machinery, apparatus, equipment, fixtures, and other property of a similar nature that are to be incorporated into or used in the preparation, fabrication, construction, erection, or completion of the Work, including Owner-furnished or assigned property; (b) spare parts inventory required within the scope of the Contract; and (c) temporary works which are not intended to form part of the permanent constructed Work but which are intended to provide working access to the Site, or to the Work under construction, or which are intended to provide temporary support for the Work under construction, including scaffolding, form work, fences, shoring, falsework, and temporary structures.

4. cover expenses incurred in the repair or replacement of any insured property (including but not limited to fees and charges of engineers and architects).


**Copyright © 2013 National Society of Professional Engineers, American Council of Engineering Companies, and American Society of Civil Engineers. All rights reserved.**

5. extend to cover damage or loss to insured property while in temporary storage at the Site or in a storage location outside the Site (but not including property stored at the premises of a manufacturer or Supplier).

6. extend to cover damage or loss to insured property while in transit.

7. allow for partial occupation or use of the Work by Owner, such that those portions of the Work that are not yet occupied or used by Owner shall remain covered by the builder's risk insurance.

8. allow for the waiver of the insurer's subrogation rights, as set forth below.

9. provide primary coverage for all losses and damages caused by the perils or causes of loss covered.

10. not include a co-insurance clause.

11. include an exception for ensuing losses from physical damage or loss with respect to any defective workmanship, design, or materials exclusions.

12. include performance/hot testing and start-up.

13. be maintained in effect, subject to the provisions herein regarding Substantial Completion and partial occupancy or use of the Work by Owner, until the Work is complete.

B. *Notice of Cancellation or Change*: All the policies of insurance (and the certificates or other evidence thereof) required to be purchased and maintained in accordance with this Paragraph 6.05 will contain a provision or endorsement that the coverage afforded will not be canceled or materially changed or renewal refused until at least 10 days prior written notice has been given to the purchasing policyholder. Within three days of receipt of any such written notice, the purchasing policyholder shall provide a copy of the notice to each other insured.

C. *Deductibles*: The purchaser of any required builder's risk or property insurance shall pay for costs not covered because of the application of a policy deductible.

D. *Partial Occupancy or Use by Owner*: If Owner will occupy or use a portion or portions of the Work prior to Substantial Completion of all the Work as provided in Paragraph 15.04, then Owner (directly, if it is the purchaser of the builder's risk policy, or through Contractor) will provide notice of such occupancy or use to the builder's risk insurer. The builder's risk insurance shall not be canceled or permitted to lapse on account of any such partial use or occupancy; rather, those portions of the Work that are occupied or used by Owner may come off the builder's risk policy, while those portions of the Work not yet occupied or used by Owner shall remain covered by the builder's risk insurance.

E. *Additional Insurance*: If Contractor elects to obtain other special insurance to be included in or supplement the builder's risk or property insurance policies provided under this Paragraph 6.05, it may do so at Contractor's expense.

F. *Insurance of Other Property*: If the express insurance provisions of the Contract do not require or address the insurance of a property item or interest, such as tools, construction equipment, or other personal property owned by Contractor, a Subcontractor, or an employee of Contractor or a Subcontractor, then the entity or individual owning such property item will be responsible for deciding whether to insure it, and if so in what amount.


**Copyright © 2013 National Society of Professional Engineers, American Council of Engineering Companies, and American Society of Civil Engineers. All rights reserved.**

6.06 *Waiver of Rights*

A. All policies purchased in accordance with Paragraph 6.05, expressly including the builder's risk policy, shall contain provisions to the effect that in the event of payment of any loss or damage the insurers will have no rights of recovery against any insureds thereunder, or against Engineer or its consultants, or their officers, directors, members, partners, employees, agents, consultants, or subcontractors. Owner and Contractor waive all rights against each other and the respective officers, directors, members, partners, employees, agents, consultants, and subcontractors of each and any of them, for all losses and damages caused by, arising out of, or resulting from any of the perils or causes of loss covered by such policies and any other property insurance applicable to the Work; and, in addition, waive all such rights against Engineer, its consultants, all Subcontractors, all individuals or entities identified in the Supplementary Conditions as insureds, and the officers, directors, members, partners, employees, agents, consultants, and subcontractors of each and any of them, under such policies for losses and damages so caused. None of the above waivers shall extend to the rights that any party making such waiver may have to the proceeds of insurance held by Owner or Contractor as trustee or fiduciary, or otherwise payable under any policy so issued.

B. Owner waives all rights against Contractor, Subcontractors, and Engineer, and the officers, directors, members, partners, employees, agents, consultants and subcontractors of each and any of them, for:

1. loss due to business interruption, loss of use, or other consequential loss extending beyond direct physical loss or damage to Owner's property or the Work caused by, arising out of, or resulting from fire or other perils whether or not insured by Owner; and

2. loss or damage to the completed Project or part thereof caused by, arising out of, or resulting from fire or other insured peril or cause of loss covered by any property insurance maintained on the completed Project or part thereof by Owner during partial occupancy or use pursuant to Paragraph 15.04, after Substantial Completion pursuant to Paragraph 15.03, or after final payment pursuant to Paragraph 15.06.

C. Any insurance policy maintained by Owner covering any loss, damage or consequential loss referred to in Paragraph 6.06.B shall contain provisions to the effect that in the event of payment of any such loss, damage, or consequential loss, the insurers will have no rights of recovery against Contractor, Subcontractors, or Engineer, or the officers, directors, members, partners, employees, agents, consultants, or subcontractors of each and any of them.

D. Contractor shall be responsible for assuring that the agreement under which a Subcontractor performs a portion of the Work contains provisions whereby the Subcontractor waives all rights against Owner, Contractor, all individuals or entities identified in the Supplementary Conditions as insureds, the Engineer and its consultants, and the officers, directors, members, partners, employees, agents, consultants, and subcontractors of each and any of them, for all losses and damages caused by, arising out of, relating to, or resulting from any of the perils or causes of loss covered by builder's risk insurance and any other property insurance applicable to the Work.

6.07 *Receipt and Application of Property Insurance Proceeds*

A. Any insured loss under the builder's risk and other policies of insurance required by Paragraph 6.05 will be adjusted and settled with the named insured that purchased the


**Copyright © 2013 National Society of Professional Engineers, American Council of Engineering Companies, and American Society of Civil Engineers. All rights reserved.**

policy. Such named insured shall act as fiduciary for the other insureds, and give notice to such other insureds that adjustment and settlement of a claim is in progress. Any other insured may state its position regarding a claim for insured loss in writing within 15 days after notice of such claim.

B. Proceeds for such insured losses may be made payable by the insurer either jointly to multiple insureds, or to the named insured that purchased the policy in its own right and as fiduciary for other insureds, subject to the requirements of any applicable mortgage clause. A named insured receiving insurance proceeds under the builder's risk and other policies of insurance required by Paragraph 6.05 shall distribute such proceeds in accordance with such agreement as the parties in interest may reach, or as otherwise required under the dispute resolution provisions of this Contract or applicable Laws and Regulations.

C. If no other special agreement is reached, the damaged Work shall be repaired or replaced, the money so received applied on account thereof, and the Work and the cost thereof covered by Change Order, if needed.

**ARTICLE 7 – CONTRACTOR'S RESPONSIBILITIES**

7.01 *Supervision and Superintendence*

A. Contractor shall supervise, inspect, and direct the Work competently and efficiently, devoting such attention thereto and applying such skills and expertise as may be necessary to perform the Work in accordance with the Contract Documents. Contractor shall be solely responsible for the means, methods, techniques, sequences, and procedures of construction.

B. At all times during the progress of the Work, Contractor shall assign a competent resident superintendent who shall not be replaced without written notice to Owner and Engineer except under extraordinary circumstances.

7.02 *Labor; Working Hours*

A. Contractor shall provide competent, suitably qualified personnel to survey and lay out the Work and perform construction as required by the Contract Documents. Contractor shall at all times maintain good discipline and order at the Site.

B. Except as otherwise required for the safety or protection of persons or the Work or property at the Site or adjacent thereto, and except as otherwise stated in the Contract Documents, all Work at the Site shall be performed during regular working hours, Monday through Friday. Contractor will not perform Work on a Saturday, Sunday, or any legal holiday. Contractor may perform Work outside regular working hours or on Saturdays, Sundays, or legal holidays only with Owner's written consent, which will not be unreasonably withheld.

7.03 *Services, Materials, and Equipment*

A. Unless otherwise specified in the Contract Documents, Contractor shall provide and assume full responsibility for all services, materials, equipment, labor, transportation, construction equipment and machinery, tools, appliances, fuel, power, light, heat, telephone, water, sanitary facilities, temporary facilities, and all other facilities and incidentals necessary for the performance, testing, start up, and completion of the Work, whether or not such items are specifically called for in the Contract Documents.

B. All materials and equipment incorporated into the Work shall be of good quality and new, except as otherwise provided in the Contract Documents. All special warranties and


**Copyright © 2013 National Society of Professional Engineers, American Council of Engineering Companies, and American Society of Civil Engineers. All rights reserved.**

guarantees required by the Specifications shall expressly run to the benefit of Owner. If required by Engineer, Contractor shall furnish satisfactory evidence (including reports of required tests) as to the source, kind, and quality of materials and equipment.

C. All materials and equipment shall be stored, applied, installed, connected, erected, protected, used, cleaned, and conditioned in accordance with instructions of the applicable Supplier, except as otherwise may be provided in the Contract Documents.

7.04 *"Or Equals"*

A. Whenever an item of material or equipment is specified or described in the Contract Documents by using the name of a proprietary item or the name of a particular Supplier, the Contract Price has been based upon Contractor furnishing such item as specified. The specification or description of such an item is intended to establish the type, function, appearance, and quality required. Unless the specification or description contains or is followed by words reading that no like, equivalent, or "or equal" item is permitted, Contractor may request that Engineer authorize the use of other items of material or equipment, or items from other proposed suppliers under the circumstances described below.

1. If Engineer in its sole discretion determines that an item of material or equipment proposed by Contractor is functionally equal to that named and sufficiently similar so that no change in related Work will be required, Engineer shall deem it an "or equal" item. For the purposes of this paragraph, a proposed item of material or equipment will be considered functionally equal to an item so named if:

a. in the exercise of reasonable judgment Engineer determines that:

1) it is at least equal in materials of construction, quality, durability, appearance, strength, and design characteristics;

2) it will reliably perform at least equally well the function and achieve the results imposed by the design concept of the completed Project as a functioning whole;

3) it has a proven record of performance and availability of responsive service; and

4) it is not objectionable to Owner.

b. Contractor certifies that, if approved and incorporated into the Work:

1) there will be no increase in cost to the Owner or increase in Contract Times; and

2) it will conform substantially to the detailed requirements of the item named in the Contract Documents.

B. *Contractor's Expense*: Contractor shall provide all data in support of any proposed "or equal" item at Contractor's expense.

C. *Engineer's Evaluation and Determination*: Engineer will be allowed a reasonable time to evaluate each "or-equal" request. Engineer may require Contractor to furnish additional data about the proposed "or-equal" item. Engineer will be the sole judge of acceptability. No "or-equal" item will be ordered, furnished, installed, or utilized until Engineer's review is complete and Engineer determines that the proposed item is an "or-equal", which will be evidenced by an approved Shop Drawing or other written communication. Engineer will advise Contractor in writing of any negative determination.


**Copyright © 2013 National Society of Professional Engineers, American Council of Engineering Companies, and American Society of Civil Engineers. All rights reserved.**

D. *Effect of Engineer's Determination*: Neither approval nor denial of an "or-equal" request shall result in any change in Contract Price. The Engineer's denial of an "or-equal" request shall be final and binding, and may not be reversed through an appeal under any provision of the Contract Documents.

E. *Treatment as a Substitution Request*: If Engineer determines that an item of material or equipment proposed by Contractor does not qualify as an "or-equal" item, Contractor may request that Engineer considered the proposed item as a substitute pursuant to Paragraph 7.05.

7.05 *Substitutes*

A. Unless the specification or description of an item of material or equipment required to be furnished under the Contract Documents contains or is followed by words reading that no substitution is permitted, Contractor may request that Engineer authorize the use of other items of material or equipment under the circumstances described below. To the extent possible such requests shall be made before commencement of related construction at the Site.

1. Contractor shall submit sufficient information as provided below to allow Engineer to determine if the item of material or equipment proposed is functionally equivalent to that named and an acceptable substitute therefor. Engineer will not accept requests for review of proposed substitute items of material or equipment from anyone other than Contractor.

2. The requirements for review by Engineer will be as set forth in Paragraph 7.05.B, as supplemented by the Specifications, and as Engineer may decide is appropriate under the circumstances.

3. Contractor shall make written application to Engineer for review of a proposed substitute item of material or equipment that Contractor seeks to furnish or use. The application:

a. shall certify that the proposed substitute item will:

1) perform adequately the functions and achieve the results called for by the general design,

2) be similar in substance to that specified, and

3) be suited to the same use as that specified.

b. will state:

1) the extent, if any, to which the use of the proposed substitute item will necessitate a change in Contract Times,

2) whether use of the proposed substitute item in the Work will require a change in any of the Contract Documents (or in the provisions of any other direct contract with Owner for other work on the Project) to adapt the design to the proposed substitute item, and

3) whether incorporation or use of the proposed substitute item in connection with the Work is subject to payment of any license fee or royalty.

c. will identify:

1) all variations of the proposed substitute item from that specified, and


**Copyright © 2013 National Society of Professional Engineers, American Council of Engineering Companies, and American Society of Civil Engineers. All rights reserved.**

2) available engineering, sales, maintenance, repair, and replacement services.

d. shall contain an itemized estimate of all costs or credits that will result directly or indirectly from use of such substitute item, including but not limited to changes in Contract Price, shared savings, costs of redesign, and claims of other contractors affected by any resulting change.

B. *Engineer's Evaluation and Determination*: Engineer will be allowed a reasonable time to evaluate each substitute request, and to obtain comments and direction from Owner. Engineer may require Contractor to furnish additional data about the proposed substitute item. Engineer will be the sole judge of acceptability. No substitute will be ordered, furnished, installed, or utilized until Engineer's review is complete and Engineer determines that the proposed item is an acceptable substitute. Engineer's determination will be evidenced by a Field Order or a proposed Change Order accounting for the substitution itself and all related impacts, including changes in Contract Price or Contract Times. Engineer will advise Contractor in writing of any negative determination.

C. *Special Guarantee*: Owner may require Contractor to furnish at Contractor's expense a special performance guarantee or other surety with respect to any substitute.

D. *Reimbursement of Engineer's Cost*: Engineer will record Engineer's costs in evaluating a substitute proposed or submitted by Contractor. Whether or not Engineer approves a substitute so proposed or submitted by Contractor, Contractor shall reimburse Owner for the reasonable charges of Engineer for evaluating each such proposed substitute. Contractor shall also reimburse Owner for the reasonable charges of Engineer for making changes in the Contract Documents (or in the provisions of any other direct contract with Owner) resulting from the acceptance of each proposed substitute.

E. *Contractor's Expense*: Contractor shall provide all data in support of any proposed substitute at Contractor's expense.

F. *Effect of Engineer's Determination*: If Engineer approves the substitution request, Contractor shall execute the proposed Change Order and proceed with the substitution. The Engineer's denial of a substitution request shall be final and binding, and may not be reversed through an appeal under any provision of the Contract Documents. Contractor may challenge the scope of reimbursement costs imposed under Paragraph 7.05.D, by timely submittal of a Change Proposal.

7.06 *Concerning Subcontractors, Suppliers, and Others*

A. Contractor may retain Subcontractors and Suppliers for the performance of parts of the Work. Such Subcontractors and Suppliers must be acceptable to Owner.

B. Contractor shall retain specific Subcontractors, Suppliers, or other individuals or entities for the performance of designated parts of the Work if required by the Contract to do so.

C. Subsequent to the submittal of Contractor's Bid or final negotiation of the terms of the Contract, Owner may not require Contractor to retain any Subcontractor, Supplier, or other individual or entity to furnish or perform any of the Work against which Contractor has reasonable objection.

D. Prior to entry into any binding subcontract or purchase order, Contractor shall submit to Owner the identity of the proposed Subcontractor or Supplier (unless Owner has already deemed such proposed Subcontractor or Supplier acceptable, during the bidding process or otherwise). Such proposed Subcontractor or Supplier shall be deemed acceptable to Owner unless Owner raises a substantive, reasonable objection within five days.


**Copyright © 2013 National Society of Professional Engineers, American Council of Engineering Companies, and American Society of Civil Engineers. All rights reserved.**

E. Owner may require the replacement of any Subcontractor, Supplier, or other individual or entity retained by Contractor to perform any part of the Work. Owner also may require Contractor to retain specific replacements; provided, however, that Owner may not require a replacement to which Contractor has a reasonable objection. If Contractor has submitted the identity of certain Subcontractors, Suppliers, or other individuals or entities for acceptance by Owner, and Owner has accepted it (either in writing or by failing to make written objection thereto), then Owner may subsequently revoke the acceptance of any such Subcontractor, Supplier, or other individual or entity so identified solely on the basis of substantive, reasonable objection after due investigation. Contractor shall submit an acceptable replacement for the rejected Subcontractor, Supplier, or other individual or entity.

F. If Owner requires the replacement of any Subcontractor, Supplier, or other individual or entity retained by Contractor to perform any part of the Work, then Contractor shall be entitled to an adjustment in Contract Price or Contract Times, or both, with respect to the replacement; and Contractor shall initiate a Change Proposal for such adjustment within 30 days of Owner's requirement of replacement.

G. No acceptance by Owner of any such Subcontractor, Supplier, or other individual or entity, whether initially or as a replacement, shall constitute a waiver of the right of Owner to the completion of the Work in accordance with the Contract Documents.

H. On a monthly basis Contractor shall submit to Engineer a complete list of all Subcontractors and Suppliers having a direct contract with Contractor, and of all other Subcontractors and Suppliers known to Contractor at the time of submittal.

I. Contractor shall be fully responsible to Owner and Engineer for all acts and omissions of the Subcontractors, Suppliers, and other individuals or entities performing or furnishing any of the Work just as Contractor is responsible for Contractor's own acts and omissions.

J. Contractor shall be solely responsible for scheduling and coordinating the work of Subcontractors, Suppliers, and all other individuals or entities performing or furnishing any of the Work.

K. Contractor shall restrict all Subcontractors, Suppliers, and such other individuals or entities performing or furnishing any of the Work from communicating with Engineer or Owner, except through Contractor or in case of an emergency, or as otherwise expressly allowed herein.

L. The divisions and sections of the Specifications and the identifications of any Drawings shall not control Contractor in dividing the Work among Subcontractors or Suppliers or delineating the Work to be performed by any specific trade.

M. All Work performed for Contractor by a Subcontractor or Supplier shall be pursuant to an appropriate contractual agreement that specifically binds the Subcontractor or Supplier to the applicable terms and conditions of the Contract Documents for the benefit of Owner and Engineer.

N. Owner may furnish to any Subcontractor or Supplier, to the extent practicable, information about amounts paid to Contractor on account of Work performed for Contractor by the particular Subcontractor or Supplier.


**Copyright © 2013 National Society of Professional Engineers, American Council of Engineering Companies, and American Society of Civil Engineers. All rights reserved.**

O. Nothing in the Contract Documents:

1. shall create for the benefit of any such Subcontractor, Supplier, or other individual or entity any contractual relationship between Owner or Engineer and any such Subcontractor, Supplier, or other individual or entity; nor

2. shall create any obligation on the part of Owner or Engineer to pay or to see to the payment of any money due any such Subcontractor, Supplier, or other individual or entity except as may otherwise be required by Laws and Regulations.

7.07 *Patent Fees and Royalties*

A. Contractor shall pay all license fees and royalties and assume all costs incident to the use in the performance of the Work or the incorporation in the Work of any invention, design, process, product, or device which is the subject of patent rights or copyrights held by others. If a particular invention, design, process, product, or device is specified in the Contract Documents for use in the performance of the Work and if, to the actual knowledge of Owner or Engineer, its use is subject to patent rights or copyrights calling for the payment of any license fee or royalty to others, the existence of such rights shall be disclosed by Owner in the Contract Documents.

B. To the fullest extent permitted by Laws and Regulations, Owner shall indemnify and hold harmless Contractor, and its officers, directors, members, partners, employees, agents, consultants, and subcontractors from and against all claims, costs, losses, and damages (including but not limited to all fees and charges of engineers, architects, attorneys, and other professionals, and all court or arbitration or other dispute resolution costs) arising out of or relating to any infringement of patent rights or copyrights incident to the use in the performance of the Work or resulting from the incorporation in the Work of any invention, design, process, product, or device specified in the Contract Documents, but not identified as being subject to payment of any license fee or royalty to others required by patent rights or copyrights.

C. To the fullest extent permitted by Laws and Regulations, Contractor shall indemnify and hold harmless Owner and Engineer, and the officers, directors, members, partners, employees, agents, consultants and subcontractors of each and any of them from and against all claims, costs, losses, and damages (including but not limited to all fees and charges of engineers, architects, attorneys, and other professionals and all court or arbitration or other dispute resolution costs) arising out of or relating to any infringement of patent rights or copyrights incident to the use in the performance of the Work or resulting from the incorporation in the Work of any invention, design, process, product, or device not specified in the Contract Documents.

7.08 *Permits*

A. Unless otherwise provided in the Contract Documents, Contractor shall obtain and pay for all construction permits and licenses. Owner shall assist Contractor, when necessary, in obtaining such permits and licenses. Contractor shall pay all governmental charges and inspection fees necessary for the prosecution of the Work which are applicable at the time of the submission of Contractor's Bid (or when Contractor became bound under a negotiated contract). Owner shall pay all charges of utility owners for connections for providing permanent service to the Work


**Copyright © 2013 National Society of Professional Engineers, American Council of Engineering Companies, and American Society of Civil Engineers. All rights reserved.**

7.09 *Taxes*

A. Contractor shall pay all sales, consumer, use, and other similar taxes required to be paid by Contractor in accordance with the Laws and Regulations of the place of the Project which are applicable during the performance of the Work.

7.10 *Laws and Regulations*

A. Contractor shall give all notices required by and shall comply with all Laws and Regulations applicable to the performance of the Work. Except where otherwise expressly required by applicable Laws and Regulations, neither Owner nor Engineer shall be responsible for monitoring Contractor's compliance with any Laws or Regulations.

B. If Contractor performs any Work or takes any other action knowing or having reason to know that it is contrary to Laws or Regulations, Contractor shall bear all resulting costs and losses, and shall indemnify and hold harmless Owner and Engineer, and the officers, directors, members, partners, employees, agents, consultants, and subcontractors of each and any of them from and against all claims, costs, losses, and damages (including but not limited to all fees and charges of engineers, architects, attorneys, and other professionals and all court or arbitration or other dispute resolution costs) arising out of or relating to such Work or other action. It shall not be Contractor's responsibility to make certain that the Work described in the Contract Documents is in accordance with Laws and Regulations, but this shall not relieve Contractor of Contractor's obligations under Paragraph 3.03.

C. Owner or Contractor may give notice to the other party of any changes after the submission of Contractor's Bid (or after the date when Contractor became bound under a negotiated contract) in Laws or Regulations having an effect on the cost or time of performance of the Work, including but not limited to changes in Laws or Regulations having an effect on procuring permits and on sales, use, value-added, consumption, and other similar taxes. If Owner and Contractor are unable to agree on entitlement to or on the amount or extent, if any, of any adjustment in Contract Price or Contract Times resulting from such changes, then within 30 days of such notice Contractor may submit a Change Proposal, or Owner may initiate a Claim.

7.11 *Record Documents*

A. Contractor shall maintain in a safe place at the Site one printed record copy of all Drawings, Specifications, Addenda, Change Orders, Work Change Directives, Field Orders, written interpretations and clarifications, and approved Shop Drawings. Contractor shall keep such record documents in good order and annotate them to show changes made during construction. These record documents, together with all approved Samples, will be available to Engineer for reference. Upon completion of the Work, Contractor shall deliver these record documents to Engineer.

7.12 *Safety and Protection*

A. Contractor shall be solely responsible for initiating, maintaining, and supervising all safety precautions and programs in connection with the Work. Such responsibility does not relieve Subcontractors of their responsibility for the safety of persons or property in the performance of their work, nor for compliance with applicable safety Laws and Regulations. Contractor shall take all necessary precautions for the safety of, and shall provide the necessary protection to prevent damage, injury, or loss to:

1. all persons on the Site or who may be affected by the Work;


**Copyright © 2013 National Society of Professional Engineers, American Council of Engineering Companies, and American Society of Civil Engineers. All rights reserved.**

2. all the Work and materials and equipment to be incorporated therein, whether in storage on or off the Site; and

3. other property at the Site or adjacent thereto, including trees, shrubs, lawns, walks, pavements, roadways, structures, other work in progress, utilities, and Underground Facilities not designated for removal, relocation, or replacement in the course of construction.

B. Contractor shall comply with all applicable Laws and Regulations relating to the safety of persons or property, or to the protection of persons or property from damage, injury, or loss; and shall erect and maintain all necessary safeguards for such safety and protection. Contractor shall notify Owner; the owners of adjacent property, Underground Facilities, and other utilities; and other contractors and utility owners performing work at or adjacent to the Site, when prosecution of the Work may affect them, and shall cooperate with them in the protection, removal, relocation, and replacement of their property or work in progress.

C. Contractor shall comply with the applicable requirements of Owner's safety programs, if any. The Supplementary Conditions identify any Owner's safety programs that are applicable to the Work.

D. Contractor shall inform Owner and Engineer of the specific requirements of Contractor's safety program with which Owner's and Engineer's employees and representatives must comply while at the Site.

E. All damage, injury, or loss to any property referred to in Paragraph 7.12.A.2 or 7.12.A.3 caused, directly or indirectly, in whole or in part, by Contractor, any Subcontractor, Supplier, or any other individual or entity directly or indirectly employed by any of them to perform any of the Work, or anyone for whose acts any of them may be liable, shall be remedied by Contractor at its expense (except damage or loss attributable to the fault of Drawings or Specifications or to the acts or omissions of Owner or Engineer or anyone employed by any of them, or anyone for whose acts any of them may be liable, and not attributable, directly or indirectly, in whole or in part, to the fault or negligence of Contractor or any Subcontractor, Supplier, or other individual or entity directly or indirectly employed by any of them).

F. Contractor's duties and responsibilities for safety and protection shall continue until such time as all the Work is completed and Engineer has issued a notice to Owner and Contractor in accordance with Paragraph 15.06.B that the Work is acceptable (except as otherwise expressly provided in connection with Substantial Completion).

G. Contractor's duties and responsibilities for safety and protection shall resume whenever Contractor or any Subcontractor or Supplier returns to the Site to fulfill warranty or correction obligations, or to conduct other tasks arising from the Contract Documents.

7.13 *Safety Representative*

A. Contractor shall designate a qualified and experienced safety representative at the Site whose duties and responsibilities shall be the prevention of accidents and the maintaining and supervising of safety precautions and programs.

7.14 *Hazard Communication Programs*

A. Contractor shall be responsible for coordinating any exchange of material safety data sheets or other hazard communication information required to be made available to or


**Copyright © 2013 National Society of Professional Engineers, American Council of Engineering Companies, and American Society of Civil Engineers. All rights reserved.**

exchanged between or among employers at the Site in accordance with Laws or Regulations.

7.15 *Emergencies*

A. In emergencies affecting the safety or protection of persons or the Work or property at the Site or adjacent thereto, Contractor is obligated to act to prevent threatened damage, injury, or loss. Contractor shall give Engineer prompt written notice if Contractor believes that any significant changes in the Work or variations from the Contract Documents have been caused thereby or are required as a result thereof. If Engineer determines that a change in the Contract Documents is required because of the action taken by Contractor in response to such an emergency, a Work Change Directive or Change Order will be issued.

7.16 *Shop Drawings, Samples, and Other Submittals*

A. *Shop Drawing and Sample Submittal Requirements*:

1. Before submitting a Shop Drawing or Sample, Contractor shall have:

a. reviewed and coordinated the Shop Drawing or Sample with other Shop Drawings and Samples and with the requirements of the Work and the Contract Documents;

b. determined and verified all field measurements, quantities, dimensions, specified performance and design criteria, installation requirements, materials, catalog numbers, and similar information with respect thereto;

c. determined and verified the suitability of all materials and equipment offered with respect to the indicated application, fabrication, shipping, handling, storage, assembly, and installation pertaining to the performance of the Work; and

d. determined and verified all information relative to Contractor's responsibilities for means, methods, techniques, sequences, and procedures of construction, and safety precautions and programs incident thereto.

2. Each submittal shall bear a stamp or specific written certification that Contractor has satisfied Contractor's obligations under the Contract Documents with respect to Contractor's review of that submittal, and that Contractor approves the submittal.

3. With each submittal, Contractor shall give Engineer specific written notice of any variations that the Shop Drawing or Sample may have from the requirements of the Contract Documents. This notice shall be set forth in a written communication separate from the Shop Drawings or Sample submittal; and, in addition, in the case of Shop Drawings by a specific notation made on each Shop Drawing submitted to Engineer for review and approval of each such variation.

B. *Submittal Procedures for Shop Drawings and Samples*: Contractor shall submit Shop Drawings and Samples to Engineer for review and approval in accordance with the accepted Schedule of Submittals. Each submittal will be identified as Engineer may require.

1. *Shop Drawings*:

a. Contractor shall submit the number of copies required in the Specifications.

b. Data shown on the Shop Drawings will be complete with respect to quantities, dimensions, specified performance and design criteria, materials, and similar data to show Engineer the services, materials, and equipment Contractor proposes to


**Copyright © 2013 National Society of Professional Engineers, American Council of Engineering Companies, and American Society of Civil Engineers. All rights reserved.**

provide and to enable Engineer to review the information for the limited purposes required by Paragraph 7.16.D.

2. *Samples*:

   a. Contractor shall submit the number of Samples required in the Specifications.

   b. Contractor shall clearly identify each Sample as to material, Supplier, pertinent data such as catalog numbers, the use for which intended and other data as Engineer may require to enable Engineer to review the submittal for the limited purposes required by Paragraph 7.16.D.

3. Where a Shop Drawing or Sample is required by the Contract Documents or the Schedule of Submittals, any related Work performed prior to Engineer's review and approval of the pertinent submittal will be at the sole expense and responsibility of Contractor.

C. *Other Submittals*: Contractor shall submit other submittals to Engineer in accordance with the accepted Schedule of Submittals, and pursuant to the applicable terms of the Specifications.

D. *Engineer's Review*:

1. Engineer will provide timely review of Shop Drawings and Samples in accordance with the Schedule of Submittals acceptable to Engineer. Engineer's review and approval will be only to determine if the items covered by the submittals will, after installation or incorporation in the Work, conform to the information given in the Contract Documents and be compatible with the design concept of the completed Project as a functioning whole as indicated by the Contract Documents.

2. Engineer's review and approval will not extend to means, methods, techniques, sequences, or procedures of construction or to safety precautions or programs incident thereto.

3. Engineer's review and approval of a separate item as such will not indicate approval of the assembly in which the item functions.

4. Engineer's review and approval of a Shop Drawing or Sample shall not relieve Contractor from responsibility for any variation from the requirements of the Contract Documents unless Contractor has complied with the requirements of Paragraph 7.16.A.3 and Engineer has given written approval of each such variation by specific written notation thereof incorporated in or accompanying the Shop Drawing or Sample. Engineer will document any such approved variation from the requirements of the Contract Documents in a Field Order.

5. Engineer's review and approval of a Shop Drawing or Sample shall not relieve Contractor from responsibility for complying with the requirements of Paragraph 7.16.A and B.

6. Engineer's review and approval of a Shop Drawing or Sample, or of a variation from the requirements of the Contract Documents, shall not, under any circumstances, change the Contract Times or Contract Price, unless such changes are included in a Change Order.

7. Neither Engineer's receipt, review, acceptance or approval of a Shop Drawing, Sample, or other submittal shall result in such item becoming a Contract Document.


**Copyright © 2013 National Society of Professional Engineers, American Council of Engineering Companies, and American Society of Civil Engineers. All rights reserved.**

8. Contractor shall perform the Work in compliance with the requirements and commitments set forth in approved Shop Drawings and Samples, subject to the provisions of Paragraph 7.16.D.4.

E. *Resubmittal Procedures*:

1. Contractor shall make corrections required by Engineer and shall return the required number of corrected copies of Shop Drawings and submit, as required, new Samples for review and approval. Contractor shall direct specific attention in writing to revisions other than the corrections called for by Engineer on previous submittals.

2. Contractor shall furnish required submittals with sufficient information and accuracy to obtain required approval of an item with no more than three submittals. Engineer will record Engineer's time for reviewing a fourth or subsequent submittal of a Shop Drawings, sample, or other item requiring approval, and Contractor shall be responsible for Engineer's charges to Owner for such time. Owner may impose a set-off against payments due to Contractor to secure reimbursement for such charges.

3. If Contractor requests a change of a previously approved submittal item, Contractor shall be responsible for Engineer's charges to Owner for its review time, and Owner may impose a set-off against payments due to Contractor to secure reimbursement for such charges, unless the need for such change is beyond the control of Contractor.

7.17 *Contractor's General Warranty and Guarantee*

A. Contractor warrants and guarantees to Owner that all Work will be in accordance with the Contract Documents and will not be defective. Engineer and its officers, directors, members, partners, employees, agents, consultants, and subcontractors shall be entitled to rely on Contractor's warranty and guarantee.

B. Contractor's warranty and guarantee hereunder excludes defects or damage caused by:

1. abuse, modification, or improper maintenance or operation by persons other than Contractor, Subcontractors, Suppliers, or any other individual or entity for whom Contractor is responsible; or

2. normal wear and tear under normal usage.

C. Contractor's obligation to perform and complete the Work in accordance with the Contract Documents shall be absolute. None of the following will constitute an acceptance of Work that is not in accordance with the Contract Documents or a release of Contractor's obligation to perform the Work in accordance with the Contract Documents:

1. observations by Engineer;

2. recommendation by Engineer or payment by Owner of any progress or final payment;

3. the issuance of a certificate of Substantial Completion by Engineer or any payment related thereto by Owner;

4. use or occupancy of the Work or any part thereof by Owner;

5. any review and approval of a Shop Drawing or Sample submittal;

6. the issuance of a notice of acceptability by Engineer;

7. any inspection, test, or approval by others; or

8. any correction of defective Work by Owner.


**Copyright © 2013 National Society of Professional Engineers, American Council of Engineering Companies, and American Society of Civil Engineers. All rights reserved.**

D. If the Contract requires the Contractor to accept the assignment of a contract entered into by Owner, then the specific warranties, guarantees, and correction obligations contained in the assigned contract shall govern with respect to Contractor's performance obligations to Owner for the Work described in the assigned contract.

7.18 *Indemnification*

A. To the fullest extent permitted by Laws and Regulations, and in addition to any other obligations of Contractor under the Contract or otherwise, Contractor shall indemnify and hold harmless Owner and Engineer, and the officers, directors, members, partners, employees, agents, consultants and subcontractors of each and any of them from and against all claims, costs, losses, and damages (including but not limited to all fees and charges of engineers, architects, attorneys, and other professionals and all court or arbitration or other dispute resolution costs) arising out of or relating to the performance of the Work, provided that any such claim, cost, loss, or damage is attributable to bodily injury, sickness, disease, or death, or to injury to or destruction of tangible property (other than the Work itself), including the loss of use resulting therefrom but only to the extent caused by any negligent act or omission of Contractor, any Subcontractor, any Supplier, or any individual or entity directly or indirectly employed by any of them to perform any of the Work or anyone for whose acts any of them may be liable.

B. In any and all claims against Owner or Engineer or any of their officers, directors, members, partners, employees, agents, consultants, or subcontractors by any employee (or the survivor or personal representative of such employee) of Contractor, any Subcontractor, any Supplier, or any individual or entity directly or indirectly employed by any of them to perform any of the Work, or anyone for whose acts any of them may be liable, the indemnification obligation under Paragraph 7.18.A shall not be limited in any way by any limitation on the amount or type of damages, compensation, or benefits payable by or for Contractor or any such Subcontractor, Supplier, or other individual or entity under workers' compensation acts, disability benefit acts, or other employee benefit acts.

C. The indemnification obligations of Contractor under Paragraph 7.18.A shall not extend to the liability of Engineer and Engineer's officers, directors, members, partners, employees, agents, consultants and subcontractors arising out of:

1. the preparation or approval of, or the failure to prepare or approve maps, Drawings, opinions, reports, surveys, Change Orders, designs, or Specifications; or

2. giving directions or instructions, or failing to give them, if that is the primary cause of the injury or damage.

7.19 *Delegation of Professional Design Services*

A. Contractor will not be required to provide professional design services unless such services are specifically required by the Contract Documents for a portion of the Work or unless such services are required to carry out Contractor's responsibilities for construction means, methods, techniques, sequences and procedures. Contractor shall not be required to provide professional services in violation of applicable Laws and Regulations.

B. If professional design services or certifications by a design professional related to systems, materials, or equipment are specifically required of Contractor by the Contract Documents, Owner and Engineer will specify all performance and design criteria that such services must satisfy. Contractor shall cause such services or certifications to be provided by a properly licensed professional, whose signature and seal shall appear on all drawings, calculations, specifications, certifications, and other submittals prepared by such professional. Shop


**Copyright © 2013 National Society of Professional Engineers, American Council of Engineering Companies, and American Society of Civil Engineers. All rights reserved.**

Drawings and other submittals related to the Work designed or certified by such professional, if prepared by others, shall bear such professional's written approval when submitted to Engineer.

C. Owner and Engineer shall be entitled to rely upon the adequacy, accuracy, and completeness of the services, certifications, or approvals performed by such design professionals, provided Owner and Engineer have specified to Contractor all performance and design criteria that such services must satisfy.

D. Pursuant to this paragraph, Engineer's review and approval of design calculations and design drawings will be only for the limited purpose of checking for conformance with performance and design criteria given and the design concept expressed in the Contract Documents. Engineer's review and approval of Shop Drawings and other submittals (except design calculations and design drawings) will be only for the purpose stated in Paragraph 7.16.D.1.

E. Contractor shall not be responsible for the adequacy of the performance or design criteria specified by Owner or Engineer.

**ARTICLE 8 – OTHER WORK AT THE SITE**

8.01 *Other Work*

A. In addition to and apart from the Work under the Contract Documents, the Owner may perform other work at or adjacent to the Site. Such other work may be performed by Owner's employees, or through contracts between the Owner and third parties. Owner may also arrange to have third-party utility owners perform work on their utilities and facilities at or adjacent to the Site.

B. If Owner performs other work at or adjacent to the Site with Owner's employees, or through contracts for such other work, then Owner shall give Contractor written notice thereof prior to starting any such other work. If Owner has advance information regarding the start of any utility work at or adjacent to the Site, Owner shall provide such information to Contractor.

C. Contractor shall afford each other contractor that performs such other work, each utility owner performing other work, and Owner, if Owner is performing other work with Owner's employees, proper and safe access to the Site, and provide a reasonable opportunity for the introduction and storage of materials and equipment and the execution of such other work. Contractor shall do all cutting, fitting, and patching of the Work that may be required to properly connect or otherwise make its several parts come together and properly integrate with such other work. Contractor shall not endanger any work of others by cutting, excavating, or otherwise altering such work; provided, however, that Contractor may cut or alter others' work with the written consent of Engineer and the others whose work will be affected.

D. If the proper execution or results of any part of Contractor's Work depends upon work performed by others under this Article 8, Contractor shall inspect such other work and promptly report to Engineer in writing any delays, defects, or deficiencies in such other work that render it unavailable or unsuitable for the proper execution and results of Contractor's Work. Contractor's failure to so report will constitute an acceptance of such other work as fit and proper for integration with Contractor's Work except for latent defects and deficiencies in such other work.


**Copyright © 2013 National Society of Professional Engineers, American Council of Engineering Companies, and American Society of Civil Engineers. All rights reserved.**

8.02 *Coordination*

A. If Owner intends to contract with others for the performance of other work at or adjacent to the Site, to perform other work at or adjacent to the Site with Owner's employees, or to arrange to have utility owners perform work at or adjacent to the Site, the following will be set forth in the Supplementary Conditions or provided to Contractor prior to the start of any such other work:

1. the identity of the individual or entity that will have authority and responsibility for coordination of the activities among the various contractors;

2. an itemization of the specific matters to be covered by such authority and responsibility; and

3. the extent of such authority and responsibilities.

B. Unless otherwise provided in the Supplementary Conditions, Owner shall have sole authority and responsibility for such coordination.

8.03 *Legal Relationships*

A. If, in the course of performing other work at or adjacent to the Site for Owner, the Owner's employees, any other contractor working for Owner, or any utility owner for whom the Owner is responsible causes damage to the Work or to the property of Contractor or its Subcontractors, or delays, disrupts, interferes with, or increases the scope or cost of the performance of the Work, through actions or inaction, then Contractor shall be entitled to an equitable adjustment in the Contract Price or the Contract Times, or both. Contractor must submit any Change Proposal seeking an equitable adjustment in the Contract Price or the Contract Times under this paragraph within 30 days of the damaging, delaying, disrupting, or interfering event. The entitlement to, and extent of, any such equitable adjustment shall take into account information (if any) regarding such other work that was provided to Contractor in the Contract Documents prior to the submittal of the Bid or the final negotiation of the terms of the Contract. When applicable, any such equitable adjustment in Contract Price shall be conditioned on Contractor assigning to Owner all Contractor's rights against such other contractor or utility owner with respect to the damage, delay, disruption, or interference that is the subject of the adjustment. Contractor's entitlement to an adjustment of the Contract Times is conditioned on such adjustment being essential to Contractor's ability to complete the Work within the Contract Times.

B. Contractor shall take reasonable and customary measures to avoid damaging, delaying, disrupting, or interfering with the work of Owner, any other contractor, or any utility owner performing other work at or adjacent to the Site. If Contractor fails to take such measures and as a result damages, delays, disrupts, or interferes with the work of any such other contractor or utility owner, then Owner may impose a set-off against payments due to Contractor, and assign to such other contractor or utility owner the Owner's contractual rights against Contractor with respect to the breach of the obligations set forth in this paragraph.

C. When Owner is performing other work at or adjacent to the Site with Owner's employees, Contractor shall be liable to Owner for damage to such other work, and for the reasonable direct delay, disruption, and interference costs incurred by Owner as a result of Contractor's failure to take reasonable and customary measures with respect to Owner's other work. In response to such damage, delay, disruption, or interference, Owner may impose a set-off against payments due to Contractor.


**Copyright © 2013 National Society of Professional Engineers, American Council of Engineering Companies, and American Society of Civil Engineers. All rights reserved.**

D. If Contractor damages, delays, disrupts, or interferes with the work of any other contractor, or any utility owner performing other work at or adjacent to the Site, through Contractor's failure to take reasonable and customary measures to avoid such impacts, or if any claim arising out of Contractor's actions, inactions, or negligence in performance of the Work at or adjacent to the Site is made by any such other contractor or utility owner against Contractor, Owner, or Engineer, then Contractor shall (1) promptly attempt to settle the claim as to all parties through negotiations with such other contractor or utility owner, or otherwise resolve the claim by arbitration or other dispute resolution proceeding or at law, and (2) indemnify and hold harmless Owner and Engineer, and the officers, directors, members, partners, employees, agents, consultants and subcontractors of each and any of them from and against any such claims, and against all costs, losses, and damages (including but not limited to all fees and charges of engineers, architects, attorneys, and other professionals and all court or arbitration or other dispute resolution costs) arising out of or relating to such damage, delay, disruption, or interference.

**ARTICLE 9 – OWNER'S RESPONSIBILITIES**

9.01 *Communications to Contractor*

A. Except as otherwise provided in these General Conditions, Owner shall issue all communications to Contractor through Engineer.

9.02 *Replacement of Engineer*

A. Owner may at its discretion appoint an engineer to replace Engineer, provided Contractor makes no reasonable objection to the replacement engineer. The replacement engineer's status under the Contract Documents shall be that of the former Engineer.

9.03 *Furnish Data*

A. Owner shall promptly furnish the data required of Owner under the Contract Documents.

9.04 *Pay When Due*

A. Owner shall make payments to Contractor when they are due as provided in the Agreement.

9.05 *Lands and Easements; Reports, Tests, and Drawings*

A. Owner's duties with respect to providing lands and easements are set forth in Paragraph 5.01.

B. Owner's duties with respect to providing engineering surveys to establish reference points are set forth in Paragraph 4.03.

C. Article 5 refers to Owner's identifying and making available to Contractor copies of reports of explorations and tests of conditions at the Site, and drawings of physical conditions relating to existing surface or subsurface structures at the Site.

9.06 *Insurance*

A. Owner's responsibilities, if any, with respect to purchasing and maintaining liability and property insurance are set forth in Article 6.

9.07 *Change Orders*

A. Owner's responsibilities with respect to Change Orders are set forth in Article 11.


**Copyright © 2013 National Society of Professional Engineers, American Council of Engineering Companies, and American Society of Civil Engineers. All rights reserved.**

9.08 *Inspections, Tests, and Approvals*

A. Owner's responsibility with respect to certain inspections, tests, and approvals is set forth in Paragraph 14.02.B.

9.09 *Limitations on Owner's Responsibilities*

A. The Owner shall not supervise, direct, or have control or authority over, nor be responsible for, Contractor's means, methods, techniques, sequences, or procedures of construction, or the safety precautions and programs incident thereto, or for any failure of Contractor to comply with Laws and Regulations applicable to the performance of the Work. Owner will not be responsible for Contractor's failure to perform the Work in accordance with the Contract Documents.

9.10 *Undisclosed Hazardous Environmental Condition*

A. Owner's responsibility in respect to an undisclosed Hazardous Environmental Condition is set forth in Paragraph 5.06.

9.11 *Evidence of Financial Arrangements*

A. Upon request of Contractor, Owner shall furnish Contractor reasonable evidence that financial arrangements have been made to satisfy Owner's obligations under the Contract Documents (including obligations under proposed changes in the Work).

9.12 *Safety Programs*

A. While at the Site, Owner's employees and representatives shall comply with the specific applicable requirements of Contractor's safety programs of which Owner has been informed.

B. Owner shall furnish copies of any applicable Owner safety programs to Contractor.

**ARTICLE 10 – ENGINEER'S STATUS DURING CONSTRUCTION**

10.01 *Owner's Representative*

A. Engineer will be Owner's representative during the construction period. The duties and responsibilities and the limitations of authority of Engineer as Owner's representative during construction are set forth in the Contract.

10.02 *Visits to Site*

A. Engineer will make visits to the Site at intervals appropriate to the various stages of construction as Engineer deems necessary in order to observe as an experienced and qualified design professional the progress that has been made and the quality of the various aspects of Contractor's executed Work. Based on information obtained during such visits and observations, Engineer, for the benefit of Owner, will determine, in general, if the Work is proceeding in accordance with the Contract Documents. Engineer will not be required to make exhaustive or continuous inspections on the Site to check the quality or quantity of the Work. Engineer's efforts will be directed toward providing for Owner a greater degree of confidence that the completed Work will conform generally to the Contract Documents. On the basis of such visits and observations, Engineer will keep Owner informed of the progress of the Work and will endeavor to guard Owner against defective Work.

B. Engineer's visits and observations are subject to all the limitations on Engineer's authority and responsibility set forth in Paragraph 10.08. Particularly, but without limitation, during


**Copyright © 2013 National Society of Professional Engineers, American Council of Engineering Companies, and American Society of Civil Engineers. All rights reserved.**

or as a result of Engineer's visits or observations of Contractor's Work, Engineer will not supervise, direct, control, or have authority over or be responsible for Contractor's means, methods, techniques, sequences, or procedures of construction, or the safety precautions and programs incident thereto, or for any failure of Contractor to comply with Laws and Regulations applicable to the performance of the Work.

10.03 *Project Representative*

A. If Owner and Engineer have agreed that Engineer will furnish a Resident Project Representative to represent Engineer at the Site and assist Engineer in observing the progress and quality of the Work, then the authority and responsibilities of any such Resident Project Representative will be as provided in the Supplementary Conditions, and limitations on the responsibilities thereof will be as provided in Paragraph 10.08. If Owner designates another representative or agent to represent Owner at the Site who is not Engineer's consultant, agent, or employee, the responsibilities and authority and limitations thereon of such other individual or entity will be as provided in the Supplementary Conditions.

10.04 *Rejecting Defective Work*

A. Engineer has the authority to reject Work in accordance with Article 14.

10.05 *Shop Drawings, Change Orders and Payments*

A. Engineer's authority, and limitations thereof, as to Shop Drawings and Samples, are set forth in Paragraph 7.16.

B. Engineer's authority, and limitations thereof, as to design calculations and design drawings submitted in response to a delegation of professional design services, if any, are set forth in Paragraph 7.19.

C. Engineer's authority as to Change Orders is set forth in Article 11.

D. Engineer's authority as to Applications for Payment is set forth in Article 15.

10.06 *Determinations for Unit Price Work*

A. Engineer will determine the actual quantities and classifications of Unit Price Work performed by Contractor as set forth in Paragraph 13.03.

10.07 *Decisions on Requirements of Contract Documents and Acceptability of Work*

A. Engineer will render decisions regarding the requirements of the Contract Documents, and judge the acceptability of the Work, pursuant to the specific procedures set forth herein for initial interpretations, Change Proposals, and acceptance of the Work. In rendering such decisions and judgments, Engineer will not show partiality to Owner or Contractor, and will not be liable to Owner, Contractor, or others in connection with any proceedings, interpretations, decisions, or judgments conducted or rendered in good faith.

10.08 *Limitations on Engineer's Authority and Responsibilities*

A. Neither Engineer's authority or responsibility under this Article 10 or under any other provision of the Contract, nor any decision made by Engineer in good faith either to exercise or not exercise such authority or responsibility or the undertaking, exercise, or performance of any authority or responsibility by Engineer, shall create, impose, or give rise to any duty in contract, tort, or otherwise owed by Engineer to Contractor, any Subcontractor, any Supplier, any other individual or entity, or to any surety for or employee or agent of any of them.


**Copyright © 2013 National Society of Professional Engineers, American Council of Engineering Companies, and American Society of Civil Engineers. All rights reserved.**

B. Engineer will not supervise, direct, control, or have authority over or be responsible for Contractor's means, methods, techniques, sequences, or procedures of construction, or the safety precautions and programs incident thereto, or for any failure of Contractor to comply with Laws and Regulations applicable to the performance of the Work. Engineer will not be responsible for Contractor's failure to perform the Work in accordance with the Contract Documents.

C. Engineer will not be responsible for the acts or omissions of Contractor or of any Subcontractor, any Supplier, or of any other individual or entity performing any of the Work.

D. Engineer's review of the final Application for Payment and accompanying documentation and all maintenance and operating instructions, schedules, guarantees, bonds, certificates of inspection, tests and approvals, and other documentation required to be delivered by Paragraph 15.06.A will only be to determine generally that their content complies with the requirements of, and in the case of certificates of inspections, tests, and approvals, that the results certified indicate compliance with the Contract Documents.

E. The limitations upon authority and responsibility set forth in this Paragraph 10.08 shall also apply to the Resident Project Representative, if any.

10.09 *Compliance with Safety Program*

A. While at the Site, Engineer's employees and representatives will comply with the specific applicable requirements of Owner's and Contractor's safety programs (if any) of which Engineer has been informed.

**ARTICLE 11 – AMENDING THE CONTRACT DOCUMENTS; CHANGES IN THE WORK**

11.01 *Amending and Supplementing Contract Documents*

A. The Contract Documents may be amended or supplemented by a Change Order, a Work Change Directive, or a Field Order.

1. *Change Orders*:

a. If an amendment or supplement to the Contract Documents includes a change in the Contract Price or the Contract Times, such amendment or supplement must be set forth in a Change Order. A Change Order also may be used to establish amendments and supplements of the Contract Documents that do not affect the Contract Price or Contract Times.

b. Owner and Contractor may amend those terms and conditions of the Contract Documents that do not involve (1) the performance or acceptability of the Work, (2) the design (as set forth in the Drawings, Specifications, or otherwise), or (3) other engineering or technical matters, without the recommendation of the Engineer. Such an amendment shall be set forth in a Change Order.

2. *Work Change Directives*: A Work Change Directive will not change the Contract Price or the Contract Times but is evidence that the parties expect that the modification ordered or documented by a Work Change Directive will be incorporated in a subsequently issued Change Order, following negotiations by the parties as to the Work Change Directive's effect, if any, on the Contract Price and Contract Times; or, if negotiations are unsuccessful, by a determination under the terms of the Contract Documents governing adjustments, expressly including Paragraph 11.04 regarding change of Contract Price. Contractor must submit any Change Proposal seeking an


**Copyright © 2013 National Society of Professional Engineers, American Council of Engineering Companies, and American Society of Civil Engineers. All rights reserved.**

adjustment of the Contract Price or the Contract Times, or both, no later than 30 days after the completion of the Work set out in the Work Change Directive. Owner must submit any Claim seeking an adjustment of the Contract Price or the Contract Times, or both, no later than 60 days after issuance of the Work Change Directive.

3. *Field Orders*: Engineer may authorize minor changes in the Work if the changes do not involve an adjustment in the Contract Price or the Contract Times and are compatible with the design concept of the completed Project as a functioning whole as indicated by the Contract Documents. Such changes will be accomplished by a Field Order and will be binding on Owner and also on Contractor, which shall perform the Work involved promptly. If Contractor believes that a Field Order justifies an adjustment in the Contract Price or Contract Times, or both, then before proceeding with the Work at issue, Contractor shall submit a Change Proposal as provided herein.

11.02 *Owner-Authorized Changes in the Work*

A. Without invalidating the Contract and without notice to any surety, Owner may, at any time or from time to time, order additions, deletions, or revisions in the Work. Such changes shall be supported by Engineer's recommendation, to the extent the change involves the design (as set forth in the Drawings, Specifications, or otherwise), or other engineering or technical matters. Such changes may be accomplished by a Change Order, if Owner and Contractor have agreed as to the effect, if any, of the changes on Contract Times or Contract Price; or by a Work Change Directive. Upon receipt of any such document, Contractor shall promptly proceed with the Work involved; or, in the case of a deletion in the Work, promptly cease construction activities with respect to such deleted Work. Added or revised Work shall be performed under the applicable conditions of the Contract Documents. Nothing in this paragraph shall obligate Contractor to undertake work that Contractor reasonably concludes cannot be performed in a manner consistent with Contractor's safety obligations under the Contract Documents or Laws and Regulations.

11.03 *Unauthorized Changes in the Work*

A. Contractor shall not be entitled to an increase in the Contract Price or an extension of the Contract Times with respect to any work performed that is not required by the Contract Documents, as amended, modified, or supplemented, except in the case of an emergency as provided in Paragraph 7.15 or in the case of uncovering Work as provided in Paragraph 14.05.

11.04 *Change of Contract Price*

A. The Contract Price may only be changed by a Change Order. Any Change Proposal for an adjustment in the Contract Price shall comply with the provisions of Paragraph 11.06. Any Claim for an adjustment of Contract Price shall comply with the provisions of Article 12.

B. An adjustment in the Contract Price will be determined as follows:

1. where the Work involved is covered by unit prices contained in the Contract Documents, then by application of such unit prices to the quantities of the items involved (subject to the provisions of Paragraph 13.03); or

2. where the Work involved is not covered by unit prices contained in the Contract Documents, then by a mutually agreed lump sum (which may include an allowance for overhead and profit not necessarily in accordance with Paragraph 11.04.C.2); or

3. where the Work involved is not covered by unit prices contained in the Contract Documents and the parties do not reach mutual agreement to a lump sum, then on


**Copyright © 2013 National Society of Professional Engineers, American Council of Engineering Companies, and American Society of Civil Engineers. All rights reserved.**

the basis of the Cost of the Work (determined as provided in Paragraph 13.01) plus a Contractor's fee for overhead and profit (determined as provided in Paragraph 11.04.C).

C. *Contractor's Fee*: When applicable, the Contractor's fee for overhead and profit shall be determined as follows:

1. a mutually acceptable fixed fee; or

2. if a fixed fee is not agreed upon, then a fee based on the following percentages of the various portions of the Cost of the Work:

a. for costs incurred under Paragraphs 13.01.B.1 and 13.01.B.2, the Contractor's fee shall be 15 percent;

b. for costs incurred under Paragraph 13.01.B.3, the Contractor's fee shall be five percent;

c. where one or more tiers of subcontracts are on the basis of Cost of the Work plus a fee and no fixed fee is agreed upon, the intent of Paragraphs 11.04.C.2.a and 11.04.C.2.b is that the Contractor's fee shall be based on: (1) a fee of 15 percent of the costs incurred under Paragraphs 13.01.A.1 and 13.01.A.2 by the Subcontractor that actually performs the Work, at whatever tier, and (2) with respect to Contractor itself and to any Subcontractors of a tier higher than that of the Subcontractor that actually performs the Work, a fee of five percent of the amount (fee plus underlying costs incurred) attributable to the next lower tier Subcontractor; provided, however, that for any such subcontracted work the maximum total fee to be paid by Owner shall be no greater than 27 percent of the costs incurred by the Subcontractor that actually performs the work;

d. no fee shall be payable on the basis of costs itemized under Paragraphs 13.01.B.4, 13.01.B.5, and 13.01.C;

e. the amount of credit to be allowed by Contractor to Owner for any change which results in a net decrease in cost will be the amount of the actual net decrease in cost plus a deduction in Contractor's fee by an amount equal to five percent of such net decrease; and

f. when both additions and credits are involved in any one change, the adjustment in Contractor's fee shall be computed on the basis of the net change in accordance with Paragraphs 11.04.C.2.a through 11.04.C.2.e, inclusive.

11.05 *Change of Contract Times*

A. The Contract Times may only be changed by a Change Order. Any Change Proposal for an adjustment in the Contract Times shall comply with the provisions of Paragraph 11.06. Any Claim for an adjustment in the Contract Times shall comply with the provisions of Article 12.

B. An adjustment of the Contract Times shall be subject to the limitations set forth in Paragraph 4.05, concerning delays in Contractor's progress.

11.06 *Change Proposals*

A. Contractor shall submit a Change Proposal to Engineer to request an adjustment in the Contract Times or Contract Price; appeal an initial decision by Engineer concerning the requirements of the Contract Documents or relating to the acceptability of the Work under the Contract Documents; contest a set-off against payment due; or seek other relief under


**Copyright © 2013 National Society of Professional Engineers, American Council of Engineering Companies, and American Society of Civil Engineers. All rights reserved.**

the Contract. The Change Proposal shall specify any proposed change in Contract Times or Contract Price, or both, or other proposed relief, and explain the reason for the proposed change, with citations to any governing or applicable provisions of the Contract Documents.

1. *Procedures*: Contractor shall submit each Change Proposal to Engineer promptly (but in no event later than 30 days) after the start of the event giving rise thereto, or after such initial decision. The Contractor shall submit supporting data, including the proposed change in Contract Price or Contract Time (if any), to the Engineer and Owner within 15 days after the submittal of the Change Proposal. The supporting data shall be accompanied by a written statement that the supporting data are accurate and complete, and that any requested time or price adjustment is the entire adjustment to which Contractor believes it is entitled as a result of said event. Engineer will advise Owner regarding the Change Proposal, and consider any comments or response from Owner regarding the Change Proposal.

2. *Engineer's Action*: Engineer will review each Change Proposal and, within 30 days after receipt of the Contractor's supporting data, either deny the Change Proposal in whole, approve it in whole, or deny it in part and approve it in part. Such actions shall be in writing, with a copy provided to Owner and Contractor. If Engineer does not take action on the Change Proposal within 30 days, then either Owner or Contractor may at any time thereafter submit a letter to the other party indicating that as a result of Engineer's inaction the Change Proposal is deemed denied, thereby commencing the time for appeal of the denial under Article 12.

3. *Binding Decision*: Engineer's decision will be final and binding upon Owner and Contractor, unless Owner or Contractor appeals the decision by filing a Claim under Article 12.

B. *Resolution of Certain Change Proposals*: If the Change Proposal does not involve the design (as set forth in the Drawings, Specifications, or otherwise), the acceptability of the Work, or other engineering or technical matters, then Engineer will notify the parties that the Engineer is unable to resolve the Change Proposal. For purposes of further resolution of such a Change Proposal, such notice shall be deemed a denial, and Contractor may choose to seek resolution under the terms of Article 12.

11.07 *Execution of Change Orders*

A. Owner and Contractor shall execute appropriate Change Orders covering:

1. changes in the Contract Price or Contract Times which are agreed to by the parties, including any undisputed sum or amount of time for Work actually performed in accordance with a Work Change Directive;

2. changes in Contract Price resulting from an Owner set-off, unless Contractor has duly contested such set-off;

3. changes in the Work which are: (a) ordered by Owner pursuant to Paragraph 11.02, (b) required because of Owner's acceptance of defective Work under Paragraph 14.04 or Owner's correction of defective Work under Paragraph 14.07, or (c) agreed to by the parties, subject to the need for Engineer's recommendation if the change in the Work involves the design (as set forth in the Drawings, Specifications, or otherwise), or other engineering or technical matters; and

4. changes in the Contract Price or Contract Times, or other changes, which embody the substance of any final and binding results under Paragraph 11.06, or Article 12.


**Copyright © 2013 National Society of Professional Engineers, American Council of Engineering Companies, and American Society of Civil Engineers. All rights reserved.**

B. If Owner or Contractor refuses to execute a Change Order that is required to be executed under the terms of this Paragraph 11.07, it shall be deemed to be of full force and effect, as if fully executed.

11.08 *Notification to Surety*

A. If the provisions of any bond require notice to be given to a surety of any change affecting the general scope of the Work or the provisions of the Contract Documents (including, but not limited to, Contract Price or Contract Times), the giving of any such notice will be Contractor's responsibility. The amount of each applicable bond will be adjusted to reflect the effect of any such change.

**ARTICLE 12 – CLAIMS**

12.01 *Claims*

A. *Claims Process*: The following disputes between Owner and Contractor shall be submitted to the Claims process set forth in this Article:

1. Appeals by Owner or Contractor of Engineer's decisions regarding Change Proposals;

2. Owner demands for adjustments in the Contract Price or Contract Times, or other relief under the Contract Documents; and

3. Disputes that Engineer has been unable to address because they do not involve the design (as set forth in the Drawings, Specifications, or otherwise), the acceptability of the Work, or other engineering or technical matters.

B. *Submittal of Claim*: The party submitting a Claim shall deliver it directly to the other party to the Contract promptly (but in no event later than 30 days) after the start of the event giving rise thereto; in the case of appeals regarding Change Proposals within 30 days of the decision under appeal. The party submitting the Claim shall also furnish a copy to the Engineer, for its information only. The responsibility to substantiate a Claim shall rest with the party making the Claim. In the case of a Claim by Contractor seeking an increase in the Contract Times or Contract Price, or both, Contractor shall certify that the Claim is made in good faith, that the supporting data are accurate and complete, and that to the best of Contractor's knowledge and belief the amount of time or money requested accurately reflects the full amount to which Contractor is entitled.

C. *Review and Resolution*: The party receiving a Claim shall review it thoroughly, giving full consideration to its merits. The two parties shall seek to resolve the Claim through the exchange of information and direct negotiations. The parties may extend the time for resolving the Claim by mutual agreement. All actions taken on a Claim shall be stated in writing and submitted to the other party, with a copy to Engineer.

D. *Mediation*:

1. At any time after initiation of a Claim, Owner and Contractor may mutually agree to mediation of the underlying dispute. The agreement to mediate shall stay the Claim submittal and response process.

2. If Owner and Contractor agree to mediation, then after 60 days from such agreement, either Owner or Contractor may unilaterally terminate the mediation process, and the Claim submittal and decision process shall resume as of the date of the termination. If the mediation proceeds but is unsuccessful in resolving the dispute, the Claim


**Copyright © 2013 National Society of Professional Engineers, American Council of Engineering Companies, and American Society of Civil Engineers. All rights reserved.**

submittal and decision process shall resume as of the date of the conclusion of the mediation, as determined by the mediator.

3. Owner and Contractor shall each pay one-half of the mediator's fees and costs.

E. *Partial Approval*: If the party receiving a Claim approves the Claim in part and denies it in part, such action shall be final and binding unless within 30 days of such action the other party invokes the procedure set forth in Article 17 for final resolution of disputes.

F. *Denial of Claim*: If efforts to resolve a Claim are not successful, the party receiving the Claim may deny it by giving written notice of denial to the other party. If the receiving party does not take action on the Claim within 90 days, then either Owner or Contractor may at any time thereafter submit a letter to the other party indicating that as a result of the inaction, the Claim is deemed denied, thereby commencing the time for appeal of the denial. A denial of the Claim shall be final and binding unless within 30 days of the denial the other party invokes the procedure set forth in Article 17 for the final resolution of disputes.

G. *Final and Binding Results*: If the parties reach a mutual agreement regarding a Claim, whether through approval of the Claim, direct negotiations, mediation, or otherwise; or if a Claim is approved in part and denied in part, or denied in full, and such actions become final and binding; then the results of the agreement or action on the Claim shall be incorporated in a Change Order to the extent they affect the Contract, including the Work, the Contract Times, or the Contract Price.

**ARTICLE 13 – COST OF THE WORK; ALLOWANCES; UNIT PRICE WORK**

13.01 *Cost of the Work*

A. *Purposes for Determination of Cost of the Work*: The term Cost of the Work means the sum of all costs necessary for the proper performance of the Work at issue, as further defined below. The provisions of this Paragraph 13.01 are used for two distinct purposes:

1. To determine Cost of the Work when Cost of the Work is a component of the Contract Price, under cost-plus-fee, time-and-materials, or other cost-based terms; or

2. To determine the value of a Change Order, Change Proposal, Claim, set-off, or other adjustment in Contract Price. When the value of any such adjustment is determined on the basis of Cost of the Work, Contractor is entitled only to those additional or incremental costs required because of the change in the Work or because of the event giving rise to the adjustment.

B. *Costs Included*: Except as otherwise may be agreed to in writing by Owner, costs included in the Cost of the Work shall be in amounts no higher than those prevailing in the locality of the Project, shall not include any of the costs itemized in Paragraph 13.01.C, and shall include only the following items:

1. Payroll costs for employees in the direct employ of Contractor in the performance of the Work under schedules of job classifications agreed upon by Owner and Contractor. Such employees shall include, without limitation, superintendents, foremen, and other personnel employed full time on the Work. Payroll costs for employees not employed full time on the Work shall be apportioned on the basis of their time spent on the Work. Payroll costs shall include, but not be limited to, salaries and wages plus the cost of fringe benefits, which shall include social security contributions, unemployment, excise, and payroll taxes, workers' compensation, health and retirement benefits, bonuses, sick leave, and vacation and holiday pay applicable


**Copyright © 2013 National Society of Professional Engineers, American Council of Engineering Companies, and American Society of Civil Engineers. All rights reserved.**

thereto. The expenses of performing Work outside of regular working hours, on Saturday, Sunday, or legal holidays, shall be included in the above to the extent authorized by Owner.

2. Cost of all materials and equipment furnished and incorporated in the Work, including costs of transportation and storage thereof, and Suppliers' field services required in connection therewith. All cash discounts shall accrue to Contractor unless Owner deposits funds with Contractor with which to make payments, in which case the cash discounts shall accrue to Owner. All trade discounts, rebates, and refunds and returns from sale of surplus materials and equipment shall accrue to Owner, and Contractor shall make provisions so that they may be obtained.

3. Payments made by Contractor to Subcontractors for Work performed by Subcontractors. If required by Owner, Contractor shall obtain competitive bids from subcontractors acceptable to Owner and Contractor and shall deliver such bids to Owner, who will then determine, with the advice of Engineer, which bids, if any, will be acceptable. If any subcontract provides that the Subcontractor is to be paid on the basis of Cost of the Work plus a fee, the Subcontractor's Cost of the Work and fee shall be determined in the same manner as Contractor's Cost of the Work and fee as provided in this Paragraph 13.01.

4. Costs of special consultants (including but not limited to engineers, architects, testing laboratories, surveyors, attorneys, and accountants) employed for services specifically related to the Work.

5. Supplemental costs including the following:

    a. The proportion of necessary transportation, travel, and subsistence expenses of Contractor's employees incurred in discharge of duties connected with the Work.

    b. Cost, including transportation and maintenance, of all materials, supplies, equipment, machinery, appliances, office, and temporary facilities at the Site, and hand tools not owned by the workers, which are consumed in the performance of the Work, and cost, less market value, of such items used but not consumed which remain the property of Contractor.

    c. Rentals of all construction equipment and machinery, and the parts thereof, whether rented from Contractor or others in accordance with rental agreements approved by Owner with the advice of Engineer, and the costs of transportation, loading, unloading, assembly, dismantling, and removal thereof. All such costs shall be in accordance with the terms of said rental agreements. The rental of any such equipment, machinery, or parts shall cease when the use thereof is no longer necessary for the Work.

    d. Sales, consumer, use, and other similar taxes related to the Work, and for which Contractor is liable, as imposed by Laws and Regulations.

    e. Deposits lost for causes other than negligence of Contractor, any Subcontractor, or anyone directly or indirectly employed by any of them or for whose acts any of them may be liable, and royalty payments and fees for permits and licenses.

    f. Losses and damages (and related expenses) caused by damage to the Work, not compensated by insurance or otherwise, sustained by Contractor in connection with the performance of the Work (except losses and damages within the deductible amounts of property insurance established in accordance with Paragraph 6.05), provided such losses and damages have resulted from causes


**Copyright © 2013 National Society of Professional Engineers, American Council of Engineering Companies, and American Society of Civil Engineers. All rights reserved.**

other than the negligence of Contractor, any Subcontractor, or anyone directly or indirectly employed by any of them or for whose acts any of them may be liable. Such losses shall include settlements made with the written consent and approval of Owner. No such losses, damages, and expenses shall be included in the Cost of the Work for the purpose of determining Contractor's fee.

g. The cost of utilities, fuel, and sanitary facilities at the Site.

h. Minor expenses such as communication service at the Site, express and courier services, and similar petty cash items in connection with the Work.

i. The costs of premiums for all bonds and insurance that Contractor is required by the Contract Documents to purchase and maintain.

C. *Costs Excluded*: The term Cost of the Work shall not include any of the following items:

1. Payroll costs and other compensation of Contractor's officers, executives, principals (of partnerships and sole proprietorships), general managers, safety managers, engineers, architects, estimators, attorneys, auditors, accountants, purchasing and contracting agents, expediters, timekeepers, clerks, and other personnel employed by Contractor, whether at the Site or in Contractor's principal or branch office for general administration of the Work and not specifically included in the agreed upon schedule of job classifications referred to in Paragraph 13.01.B.1 or specifically covered by Paragraph 13.01.B.4. The payroll costs and other compensation excluded here are to be considered administrative costs covered by the Contractor's fee.

2. Expenses of Contractor's principal and branch offices other than Contractor's office at the Site.

3. Any part of Contractor's capital expenses, including interest on Contractor's capital employed for the Work and charges against Contractor for delinquent payments.

4. Costs due to the negligence of Contractor, any Subcontractor, or anyone directly or indirectly employed by any of them or for whose acts any of them may be liable, including but not limited to, the correction of defective Work, disposal of materials or equipment wrongly supplied, and making good any damage to property.

5. Other overhead or general expense costs of any kind and the costs of any item not specifically and expressly included in Paragraph 13.01.B.

D. *Contractor's Fee*: When the Work as a whole is performed on the basis of cost-plus, Contractor's fee shall be determined as set forth in the Agreement. When the value of any Work covered by a Change Order, Change Proposal, Claim, set-off, or other adjustment in Contract Price is determined on the basis of Cost of the Work, Contractor's fee shall be determined as set forth in Paragraph 11.04.C.

E. *Documentation*: Whenever the Cost of the Work for any purpose is to be determined pursuant to this Article 13, Contractor will establish and maintain records thereof in accordance with generally accepted accounting practices and submit in a form acceptable to Engineer an itemized cost breakdown together with supporting data.

13.02 *Allowances*

A. It is understood that Contractor has included in the Contract Price all allowances so named in the Contract Documents and shall cause the Work so covered to be performed for such sums and by such persons or entities as may be acceptable to Owner and Engineer.


**Copyright © 2013 National Society of Professional Engineers, American Council of Engineering Companies, and American Society of Civil Engineers. All rights reserved.**

B. *Cash Allowances*: Contractor agrees that:

1. the cash allowances include the cost to Contractor (less any applicable trade discounts) of materials and equipment required by the allowances to be delivered at the Site, and all applicable taxes; and

2. Contractor's costs for unloading and handling on the Site, labor, installation, overhead, profit, and other expenses contemplated for the cash allowances have been included in the Contract Price and not in the allowances, and no demand for additional payment on account of any of the foregoing will be valid.

C. *Contingency Allowance*: Contractor agrees that a contingency allowance, if any, is for the sole use of Owner to cover unanticipated costs.

D. Prior to final payment, an appropriate Change Order will be issued as recommended by Engineer to reflect actual amounts due Contractor on account of Work covered by allowances, and the Contract Price shall be correspondingly adjusted.

13.03 *Unit Price Work*

A. Where the Contract Documents provide that all or part of the Work is to be Unit Price Work, initially the Contract Price will be deemed to include for all Unit Price Work an amount equal to the sum of the unit price for each separately identified item of Unit Price Work times the estimated quantity of each item as indicated in the Agreement.

B. The estimated quantities of items of Unit Price Work are not guaranteed and are solely for the purpose of comparison of Bids and determining an initial Contract Price. Payments to Contractor for Unit Price Work will be based on actual quantities.

C. Each unit price will be deemed to include an amount considered by Contractor to be adequate to cover Contractor's overhead and profit for each separately identified item.

D. Engineer will determine the actual quantities and classifications of Unit Price Work performed by Contractor. Engineer will review with Contractor the Engineer's preliminary determinations on such matters before rendering a written decision thereon (by recommendation of an Application for Payment or otherwise). Engineer's written decision thereon will be final and binding (except as modified by Engineer to reflect changed factual conditions or more accurate data) upon Owner and Contractor, subject to the provisions of the following paragraph.

E. Within 30 days of Engineer's written decision under the preceding paragraph, Contractor may submit a Change Proposal, or Owner may file a Claim, seeking an adjustment in the Contract Price if:

1. the quantity of any item of Unit Price Work performed by Contractor differs materially and significantly from the estimated quantity of such item indicated in the Agreement;

2. there is no corresponding adjustment with respect to any other item of Work; and

3. Contractor believes that it is entitled to an increase in Contract Price as a result of having incurred additional expense or Owner believes that Owner is entitled to a decrease in Contract Price, and the parties are unable to agree as to the amount of any such increase or decrease.


**Copyright © 2013 National Society of Professional Engineers, American Council of Engineering Companies, and American Society of Civil Engineers. All rights reserved.**

## ARTICLE 14 – TESTS AND INSPECTIONS; CORRECTION, REMOVAL OR ACCEPTANCE OF DEFECTIVE WORK

14.01 *Access to Work*

A. Owner, Engineer, their consultants and other representatives and personnel of Owner, independent testing laboratories, and authorities having jurisdiction will have access to the Site and the Work at reasonable times for their observation, inspection, and testing. Contractor shall provide them proper and safe conditions for such access and advise them of Contractor's safety procedures and programs so that they may comply therewith as applicable.

14.02 *Tests, Inspections, and Approvals*

A. Contractor shall give Engineer timely notice of readiness of the Work (or specific parts thereof) for all required inspections and tests, and shall cooperate with inspection and testing personnel to facilitate required inspections and tests.

B. Owner shall retain and pay for the services of an independent inspector, testing laboratory, or other qualified individual or entity to perform all inspections and tests expressly required by the Contract Documents to be furnished and paid for by Owner, except that costs incurred in connection with tests or inspections of covered Work shall be governed by the provisions of Paragraph 14.05.

C. If Laws or Regulations of any public body having jurisdiction require any Work (or part thereof) specifically to be inspected, tested, or approved by an employee or other representative of such public body, Contractor shall assume full responsibility for arranging and obtaining such inspections, tests, or approvals, pay all costs in connection therewith, and furnish Engineer the required certificates of inspection or approval.

D. Contractor shall be responsible for arranging, obtaining, and paying for all inspections and tests required:

1. by the Contract Documents, unless the Contract Documents expressly allocate responsibility for a specific inspection or test to Owner;

2. to attain Owner's and Engineer's acceptance of materials or equipment to be incorporated in the Work;

3. by manufacturers of equipment furnished under the Contract Documents;

4. for testing, adjusting, and balancing of mechanical, electrical, and other equipment to be incorporated into the Work; and

5. for acceptance of materials, mix designs, or equipment submitted for approval prior to Contractor's purchase thereof for incorporation in the Work.

Such inspections and tests shall be performed by independent inspectors, testing laboratories, or other qualified individuals or entities acceptable to Owner and Engineer.

E. If the Contract Documents require the Work (or part thereof) to be approved by Owner, Engineer, or another designated individual or entity, then Contractor shall assume full responsibility for arranging and obtaining such approvals.

F. If any Work (or the work of others) that is to be inspected, tested, or approved is covered by Contractor without written concurrence of Engineer, Contractor shall, if requested by Engineer, uncover such Work for observation. Such uncovering shall be at Contractor's expense unless Contractor had given Engineer timely notice of Contractor's intention to


Copyright © 2013 National Society of Professional Engineers, American Council of Engineering Companies, and American Society of Civil Engineers. All rights reserved.

cover the same and Engineer had not acted with reasonable promptness in response to such notice.

14.03 *Defective Work*

A. *Contractor's Obligation*: It is Contractor's obligation to assure that the Work is not defective.

B. *Engineer's Authority*: Engineer has the authority to determine whether Work is defective, and to reject defective Work.

C. *Notice of Defects*: Prompt notice of all defective Work of which Owner or Engineer has actual knowledge will be given to Contractor.

D. *Correction, or Removal and Replacement*: Promptly after receipt of written notice of defective Work, Contractor shall correct all such defective Work, whether or not fabricated, installed, or completed, or, if Engineer has rejected the defective Work, remove it from the Project and replace it with Work that is not defective.

E. *Preservation of Warranties*: When correcting defective Work, Contractor shall take no action that would void or otherwise impair Owner's special warranty and guarantee, if any, on said Work.

F. *Costs and Damages*: In addition to its correction, removal, and replacement obligations with respect to defective Work, Contractor shall pay all claims, costs, losses, and damages arising out of or relating to defective Work, including but not limited to the cost of the inspection, testing, correction, removal, replacement, or reconstruction of such defective Work, fines levied against Owner by governmental authorities because the Work is defective, and the costs of repair or replacement of work of others resulting from defective Work. Prior to final payment, if Owner and Contractor are unable to agree as to the measure of such claims, costs, losses, and damages resulting from defective Work, then Owner may impose a reasonable set-off against payments due under Article 15.

14.04 *Acceptance of Defective Work*

A. If, instead of requiring correction or removal and replacement of defective Work, Owner prefers to accept it, Owner may do so (subject, if such acceptance occurs prior to final payment, to Engineer's confirmation that such acceptance is in general accord with the design intent and applicable engineering principles, and will not endanger public safety). Contractor shall pay all claims, costs, losses, and damages attributable to Owner's evaluation of and determination to accept such defective Work (such costs to be approved by Engineer as to reasonableness), and for the diminished value of the Work to the extent not otherwise paid by Contractor. If any such acceptance occurs prior to final payment, the necessary revisions in the Contract Documents with respect to the Work shall be incorporated in a Change Order. If the parties are unable to agree as to the decrease in the Contract Price, reflecting the diminished value of Work so accepted, then Owner may impose a reasonable set-off against payments due under Article 15. If the acceptance of defective Work occurs after final payment, Contractor shall pay an appropriate amount to Owner.

14.05 *Uncovering Work*

A. Engineer has the authority to require additional inspection or testing of the Work, whether or not the Work is fabricated, installed, or completed.


**Copyright © 2013 National Society of Professional Engineers, American Council of Engineering Companies, and American Society of Civil Engineers. All rights reserved.**

B. If any Work is covered contrary to the written request of Engineer, then Contractor shall, if requested by Engineer, uncover such Work for Engineer's observation, and then replace the covering, all at Contractor's expense.

C. If Engineer considers it necessary or advisable that covered Work be observed by Engineer or inspected or tested by others, then Contractor, at Engineer's request, shall uncover, expose, or otherwise make available for observation, inspection, or testing as Engineer may require, that portion of the Work in question, and provide all necessary labor, material, and equipment.

1. If it is found that the uncovered Work is defective, Contractor shall be responsible for all claims, costs, losses, and damages arising out of or relating to such uncovering, exposure, observation, inspection, and testing, and of satisfactory replacement or reconstruction (including but not limited to all costs of repair or replacement of work of others); and pending Contractor's full discharge of this responsibility the Owner shall be entitled to impose a reasonable set-off against payments due under Article 15.

2. If the uncovered Work is not found to be defective, Contractor shall be allowed an increase in the Contract Price or an extension of the Contract Times, or both, directly attributable to such uncovering, exposure, observation, inspection, testing, replacement, and reconstruction. If the parties are unable to agree as to the amount or extent thereof, then Contractor may submit a Change Proposal within 30 days of the determination that the Work is not defective.

14.06 *Owner May Stop the Work*

A. If the Work is defective, or Contractor fails to supply sufficient skilled workers or suitable materials or equipment, or fails to perform the Work in such a way that the completed Work will conform to the Contract Documents, then Owner may order Contractor to stop the Work, or any portion thereof, until the cause for such order has been eliminated; however, this right of Owner to stop the Work shall not give rise to any duty on the part of Owner to exercise this right for the benefit of Contractor, any Subcontractor, any Supplier, any other individual or entity, or any surety for, or employee or agent of any of them.

14.07 *Owner May Correct Defective Work*

A. If Contractor fails within a reasonable time after written notice from Engineer to correct defective Work, or to remove and replace rejected Work as required by Engineer, or if Contractor fails to perform the Work in accordance with the Contract Documents, or if Contractor fails to comply with any other provision of the Contract Documents, then Owner may, after seven days written notice to Contractor, correct or remedy any such deficiency.

B. In exercising the rights and remedies under this Paragraph 14.07, Owner shall proceed expeditiously. In connection with such corrective or remedial action, Owner may exclude Contractor from all or part of the Site, take possession of all or part of the Work and suspend Contractor's services related thereto, and incorporate in the Work all materials and equipment stored at the Site or for which Owner has paid Contractor but which are stored elsewhere. Contractor shall allow Owner, Owner's representatives, agents and employees, Owner's other contractors, and Engineer and Engineer's consultants access to the Site to enable Owner to exercise the rights and remedies under this paragraph.

C. All claims, costs, losses, and damages incurred or sustained by Owner in exercising the rights and remedies under this Paragraph 14.07 will be charged against Contractor as set-offs against payments due under Article 15. Such claims, costs, losses and damages will


**Copyright © 2013 National Society of Professional Engineers, American Council of Engineering Companies, and American Society of Civil Engineers. All rights reserved.**

include but not be limited to all costs of repair, or replacement of work of others destroyed or damaged by correction, removal, or replacement of Contractor's defective Work.

D. Contractor shall not be allowed an extension of the Contract Times because of any delay in the performance of the Work attributable to the exercise by Owner of Owner's rights and remedies under this Paragraph 14.07.

**ARTICLE 15 – PAYMENTS TO CONTRACTOR; SET-OFFS; COMPLETION; CORRECTION PERIOD**

15.01 *Progress Payments*

A. *Basis for Progress Payments*: The Schedule of Values established as provided in Article 2 will serve as the basis for progress payments and will be incorporated into a form of Application for Payment acceptable to Engineer. Progress payments on account of Unit Price Work will be based on the number of units completed during the pay period, as determined under the provisions of Paragraph 13.03. Progress payments for cost-based Work will be based on Cost of the Work completed by Contractor during the pay period.

B. *Applications for Payments*:

1. At least 20 days before the date established in the Agreement for each progress payment (but not more often than once a month), Contractor shall submit to Engineer for review an Application for Payment filled out and signed by Contractor covering the Work completed as of the date of the Application and accompanied by such supporting documentation as is required by the Contract Documents. If payment is requested on the basis of materials and equipment not incorporated in the Work but delivered and suitably stored at the Site or at another location agreed to in writing, the Application for Payment shall also be accompanied by a bill of sale, invoice, or other documentation warranting that Owner has received the materials and equipment free and clear of all Liens, and evidence that the materials and equipment are covered by appropriate property insurance, a warehouse bond, or other arrangements to protect Owner's interest therein, all of which must be satisfactory to Owner.

2. Beginning with the second Application for Payment, each Application shall include an affidavit of Contractor stating that all previous progress payments received on account of the Work have been applied on account to discharge Contractor's legitimate obligations associated with prior Applications for Payment.

3. The amount of retainage with respect to progress payments will be as stipulated in the Agreement.

C. *Review of Applications*:

1. Engineer will, within 10 days after receipt of each Application for Payment, including each resubmittal, either indicate in writing a recommendation of payment and present the Application to Owner, or return the Application to Contractor indicating in writing Engineer's reasons for refusing to recommend payment. In the latter case, Contractor may make the necessary corrections and resubmit the Application.

2. Engineer's recommendation of any payment requested in an Application for Payment will constitute a representation by Engineer to Owner, based on Engineer's observations of the executed Work as an experienced and qualified design professional, and on Engineer's review of the Application for Payment and the accompanying data and schedules, that to the best of Engineer's knowledge, information and belief:


**Copyright © 2013 National Society of Professional Engineers, American Council of Engineering Companies, and American Society of Civil Engineers. All rights reserved.**

a. the Work has progressed to the point indicated;

b. the quality of the Work is generally in accordance with the Contract Documents (subject to an evaluation of the Work as a functioning whole prior to or upon Substantial Completion, the results of any subsequent tests called for in the Contract Documents, a final determination of quantities and classifications for Unit Price Work under Paragraph 13.03, and any other qualifications stated in the recommendation); and

c. the conditions precedent to Contractor's being entitled to such payment appear to have been fulfilled in so far as it is Engineer's responsibility to observe the Work.

3. By recommending any such payment Engineer will not thereby be deemed to have represented that:

a. inspections made to check the quality or the quantity of the Work as it has been performed have been exhaustive, extended to every aspect of the Work in progress, or involved detailed inspections of the Work beyond the responsibilities specifically assigned to Engineer in the Contract; or

b. there may not be other matters or issues between the parties that might entitle Contractor to be paid additionally by Owner or entitle Owner to withhold payment to Contractor.

4. Neither Engineer's review of Contractor's Work for the purposes of recommending payments nor Engineer's recommendation of any payment, including final payment, will impose responsibility on Engineer:

a. to supervise, direct, or control the Work, or

b. for the means, methods, techniques, sequences, or procedures of construction, or the safety precautions and programs incident thereto, or

c. for Contractor's failure to comply with Laws and Regulations applicable to Contractor's performance of the Work, or

d. to make any examination to ascertain how or for what purposes Contractor has used the money paid on account of the Contract Price, or

e. to determine that title to any of the Work, materials, or equipment has passed to Owner free and clear of any Liens.

5. Engineer may refuse to recommend the whole or any part of any payment if, in Engineer's opinion, it would be incorrect to make the representations to Owner stated in Paragraph 15.01.C.2.

6. Engineer will recommend reductions in payment (set-offs) necessary in Engineer's opinion to protect Owner from loss because:

a. the Work is defective, requiring correction or replacement;

b. the Contract Price has been reduced by Change Orders;

c. Owner has been required to correct defective Work in accordance with Paragraph 14.07, or has accepted defective Work pursuant to Paragraph 14.04;

d. Owner has been required to remove or remediate a Hazardous Environmental Condition for which Contractor is responsible; or


**Copyright © 2013 National Society of Professional Engineers, American Council of Engineering Companies, and American Society of Civil Engineers. All rights reserved.**

e. Engineer has actual knowledge of the occurrence of any of the events that would constitute a default by Contractor and therefore justify termination for cause under the Contract Documents.

D. *Payment Becomes Due*:

1. Ten days after presentation of the Application for Payment to Owner with Engineer's recommendation, the amount recommended (subject to any Owner set-offs) will become due, and when due will be paid by Owner to Contractor.

E. *Reductions in Payment by Owner*:

1. In addition to any reductions in payment (set-offs) recommended by Engineer, Owner is entitled to impose a set-off against payment based on any of the following:

a. claims have been made against Owner on account of Contractor's conduct in the performance or furnishing of the Work, or Owner has incurred costs, losses, or damages on account of Contractor's conduct in the performance or furnishing of the Work, including but not limited to claims, costs, losses, or damages from workplace injuries, adjacent property damage, non-compliance with Laws and Regulations, and patent infringement;

b. Contractor has failed to take reasonable and customary measures to avoid damage, delay, disruption, and interference with other work at or adjacent to the Site;

c. Contractor has failed to provide and maintain required bonds or insurance;

d. Owner has been required to remove or remediate a Hazardous Environmental Condition for which Contractor is responsible;

e. Owner has incurred extra charges or engineering costs related to submittal reviews, evaluations of proposed substitutes, tests and inspections, or return visits to manufacturing or assembly facilities;

f. the Work is defective, requiring correction or replacement;

g. Owner has been required to correct defective Work in accordance with Paragraph 14.07, or has accepted defective Work pursuant to Paragraph 14.04;

h. the Contract Price has been reduced by Change Orders;

i. an event that would constitute a default by Contractor and therefore justify a termination for cause has occurred;

j. liquidated damages have accrued as a result of Contractor's failure to achieve Milestones, Substantial Completion, or final completion of the Work;

k. Liens have been filed in connection with the Work, except where Contractor has delivered a specific bond satisfactory to Owner to secure the satisfaction and discharge of such Liens;

l. there are other items entitling Owner to a set off against the amount recommended.

2. If Owner imposes any set-off against payment, whether based on its own knowledge or on the written recommendations of Engineer, Owner will give Contractor immediate written notice (with a copy to Engineer) stating the reasons for such action and the specific amount of the reduction, and promptly pay Contractor any amount


**Copyright © 2013 National Society of Professional Engineers, American Council of Engineering Companies, and American Society of Civil Engineers. All rights reserved.**

remaining after deduction of the amount so withheld. Owner shall promptly pay Contractor the amount so withheld, or any adjustment thereto agreed to by Owner and Contractor, if Contractor remedies the reasons for such action. The reduction imposed shall be binding on Contractor unless it duly submits a Change Proposal contesting the reduction.

3. Upon a subsequent determination that Owner's refusal of payment was not justified, the amount wrongfully withheld shall be treated as an amount due as determined by Paragraph 15.01.C.1 and subject to interest as provided in the Agreement.

15.02 *Contractor's Warranty of Title*

A. Contractor warrants and guarantees that title to all Work, materials, and equipment furnished under the Contract will pass to Owner free and clear of (1) all Liens and other title defects, and (2) all patent, licensing, copyright, or royalty obligations, no later than seven days after the time of payment by Owner.

15.03 *Substantial Completion*

A. When Contractor considers the entire Work ready for its intended use Contractor shall notify Owner and Engineer in writing that the entire Work is substantially complete and request that Engineer issue a certificate of Substantial Completion. Contractor shall at the same time submit to Owner and Engineer an initial draft of punch list items to be completed or corrected before final payment.

B. Promptly after Contractor's notification, Owner, Contractor, and Engineer shall make an inspection of the Work to determine the status of completion. If Engineer does not consider the Work substantially complete, Engineer will notify Contractor in writing giving the reasons therefor.

C. If Engineer considers the Work substantially complete, Engineer will deliver to Owner a preliminary certificate of Substantial Completion which shall fix the date of Substantial Completion. Engineer shall attach to the certificate a punch list of items to be completed or corrected before final payment. Owner shall have seven days after receipt of the preliminary certificate during which to make written objection to Engineer as to any provisions of the certificate or attached punch list. If, after considering the objections to the provisions of the preliminary certificate, Engineer concludes that the Work is not substantially complete, Engineer will, within 14 days after submission of the preliminary certificate to Owner, notify Contractor in writing that the Work is not substantially complete, stating the reasons therefor. If Owner does not object to the provisions of the certificate, or if despite consideration of Owner's objections Engineer concludes that the Work is substantially complete, then Engineer will, within said 14 days, execute and deliver to Owner and Contractor a final certificate of Substantial Completion (with a revised punch list of items to be completed or corrected) reflecting such changes from the preliminary certificate as Engineer believes justified after consideration of any objections from Owner.

D. At the time of receipt of the preliminary certificate of Substantial Completion, Owner and Contractor will confer regarding Owner's use or occupancy of the Work following Substantial Completion, review the builder's risk insurance policy with respect to the end of the builder's risk coverage, and confirm the transition to coverage of the Work under a permanent property insurance policy held by Owner. Unless Owner and Contractor agree otherwise in writing, Owner shall bear responsibility for security, operation, protection of the Work, property insurance, maintenance, heat, and utilities upon Owner's use or occupancy of the Work.


**Copyright © 2013 National Society of Professional Engineers, American Council of Engineering Companies, and American Society of Civil Engineers. All rights reserved.**

E. After Substantial Completion the Contractor shall promptly begin work on the punch list of items to be completed or corrected prior to final payment. In appropriate cases Contractor may submit monthly Applications for Payment for completed punch list items, following the progress payment procedures set forth above.

F. Owner shall have the right to exclude Contractor from the Site after the date of Substantial Completion subject to allowing Contractor reasonable access to remove its property and complete or correct items on the punch list.

15.04 *Partial Use or Occupancy*

A. Prior to Substantial Completion of all the Work, Owner may use or occupy any substantially completed part of the Work which has specifically been identified in the Contract Documents, or which Owner, Engineer, and Contractor agree constitutes a separately functioning and usable part of the Work that can be used by Owner for its intended purpose without significant interference with Contractor's performance of the remainder of the Work, subject to the following conditions:

1. At any time Owner may request in writing that Contractor permit Owner to use or occupy any such part of the Work that Owner believes to be substantially complete. If and when Contractor agrees that such part of the Work is substantially complete, Contractor, Owner, and Engineer will follow the procedures of Paragraph 15.03.A through E for that part of the Work.

2. At any time Contractor may notify Owner and Engineer in writing that Contractor considers any such part of the Work substantially complete and request Engineer to issue a certificate of Substantial Completion for that part of the Work.

3. Within a reasonable time after either such request, Owner, Contractor, and Engineer shall make an inspection of that part of the Work to determine its status of completion. If Engineer does not consider that part of the Work to be substantially complete, Engineer will notify Owner and Contractor in writing giving the reasons therefor. If Engineer considers that part of the Work to be substantially complete, the provisions of Paragraph 15.03 will apply with respect to certification of Substantial Completion of that part of the Work and the division of responsibility in respect thereof and access thereto.

4. No use or occupancy or separate operation of part of the Work may occur prior to compliance with the requirements of Paragraph 6.05 regarding builder's risk or other property insurance.

15.05 *Final Inspection*

A. Upon written notice from Contractor that the entire Work or an agreed portion thereof is complete, Engineer will promptly make a final inspection with Owner and Contractor and will notify Contractor in writing of all particulars in which this inspection reveals that the Work, or agreed portion thereof, is incomplete or defective. Contractor shall immediately take such measures as are necessary to complete such Work or remedy such deficiencies.

15.06 *Final Payment*

A. *Application for Payment*:

1. After Contractor has, in the opinion of Engineer, satisfactorily completed all corrections identified during the final inspection and has delivered, in accordance with the Contract Documents, all maintenance and operating instructions, schedules, guarantees, bonds, certificates or other evidence of insurance, certificates of


**Copyright © 2013 National Society of Professional Engineers, American Council of Engineering Companies, and American Society of Civil Engineers. All rights reserved.**

inspection, annotated record documents (as provided in Paragraph 7.11), and other documents, Contractor may make application for final payment.

2. The final Application for Payment shall be accompanied (except as previously delivered) by:

   a. all documentation called for in the Contract Documents;

   b. consent of the surety, if any, to final payment;

   c. satisfactory evidence that all title issues have been resolved such that title to all Work, materials, and equipment has passed to Owner free and clear of any Liens or other title defects, or will so pass upon final payment.

   d. a list of all disputes that Contractor believes are unsettled; and

   e. complete and legally effective releases or waivers (satisfactory to Owner) of all Lien rights arising out of the Work, and of Liens filed in connection with the Work.

3. In lieu of the releases or waivers of Liens specified in Paragraph 15.06.A.2 and as approved by Owner, Contractor may furnish receipts or releases in full and an affidavit of Contractor that: (a) the releases and receipts include all labor, services, material, and equipment for which a Lien could be filed; and (b) all payrolls, material and equipment bills, and other indebtedness connected with the Work for which Owner might in any way be responsible, or which might in any way result in liens or other burdens on Owner's property, have been paid or otherwise satisfied. If any Subcontractor or Supplier fails to furnish such a release or receipt in full, Contractor may furnish a bond or other collateral satisfactory to Owner to indemnify Owner against any Lien, or Owner at its option may issue joint checks payable to Contractor and specified Subcontractors and Suppliers.

B. *Engineer's Review of Application and Acceptance*:

1. If, on the basis of Engineer's observation of the Work during construction and final inspection, and Engineer's review of the final Application for Payment and accompanying documentation as required by the Contract Documents, Engineer is satisfied that the Work has been completed and Contractor's other obligations under the Contract have been fulfilled, Engineer will, within ten days after receipt of the final Application for Payment, indicate in writing Engineer's recommendation of final payment and present the Application for Payment to Owner for payment. Such recommendation shall account for any set-offs against payment that are necessary in Engineer's opinion to protect Owner from loss for the reasons stated above with respect to progress payments. At the same time Engineer will also give written notice to Owner and Contractor that the Work is acceptable, subject to the provisions of Paragraph 15.07. Otherwise, Engineer will return the Application for Payment to Contractor, indicating in writing the reasons for refusing to recommend final payment, in which case Contractor shall make the necessary corrections and resubmit the Application for Payment.

C. *Completion of Work*: The Work is complete (subject to surviving obligations) when it is ready for final payment as established by the Engineer's written recommendation of final payment.

D. *Payment Becomes Due*: Thirty days after the presentation to Owner of the final Application for Payment and accompanying documentation, the amount recommended by Engineer (less any further sum Owner is entitled to set off against Engineer's recommendation,


**Copyright © 2013 National Society of Professional Engineers, American Council of Engineering Companies, and American Society of Civil Engineers. All rights reserved.**

including but not limited to set-offs for liquidated damages and set-offs allowed under the provisions above with respect to progress payments) will become due and shall be paid by Owner to Contractor.

15.07 *Waiver of Claims*

A. The making of final payment will not constitute a waiver by Owner of claims or rights against Contractor. Owner expressly reserves claims and rights arising from unsettled Liens, from defective Work appearing after final inspection pursuant to Paragraph 15.05, from Contractor's failure to comply with the Contract Documents or the terms of any special guarantees specified therein, from outstanding Claims by Owner, or from Contractor's continuing obligations under the Contract Documents.

B. The acceptance of final payment by Contractor will constitute a waiver by Contractor of all claims and rights against Owner other than those pending matters that have been duly submitted or appealed under the provisions of Article 17.

15.08 *Correction Period*

A. If within one year after the date of Substantial Completion (or such longer period of time as may be prescribed by the terms of any applicable special guarantee required by the Contract Documents, or by any specific provision of the Contract Documents), any Work is found to be defective, or if the repair of any damages to the Site, adjacent areas that Contractor has arranged to use through construction easements or otherwise, and other adjacent areas used by Contractor as permitted by Laws and Regulations, is found to be defective, then Contractor shall promptly, without cost to Owner and in accordance with Owner's written instructions:

1. correct the defective repairs to the Site or such other adjacent areas;

2. correct such defective Work;

3. if the defective Work has been rejected by Owner, remove it from the Project and replace it with Work that is not defective, and

4. satisfactorily correct or repair or remove and replace any damage to other Work, to the work of others, or to other land or areas resulting therefrom.

B. If Contractor does not promptly comply with the terms of Owner's written instructions, or in an emergency where delay would cause serious risk of loss or damage, Owner may have the defective Work corrected or repaired or may have the rejected Work removed and replaced. Contractor shall pay all claims, costs, losses, and damages (including but not limited to all fees and charges of engineers, architects, attorneys, and other professionals and all court or arbitration or other dispute resolution costs) arising out of or relating to such correction or repair or such removal and replacement (including but not limited to all costs of repair or replacement of work of others).

C. In special circumstances where a particular item of equipment is placed in continuous service before Substantial Completion of all the Work, the correction period for that item may start to run from an earlier date if so provided in the Specifications.

D. Where defective Work (and damage to other Work resulting therefrom) has been corrected or removed and replaced under this paragraph, the correction period hereunder with respect to such Work will be extended for an additional period of one year after such correction or removal and replacement has been satisfactorily completed.


**Copyright © 2013 National Society of Professional Engineers, American Council of Engineering Companies, and American Society of Civil Engineers. All rights reserved.**

E. Contractor's obligations under this paragraph are in addition to all other obligations and warranties. The provisions of this paragraph shall not be construed as a substitute for, or a waiver of, the provisions of any applicable statute of limitation or repose.

**ARTICLE 16 – SUSPENSION OF WORK AND TERMINATION**

16.01 *Owner May Suspend Work*

A. At any time and without cause, Owner may suspend the Work or any portion thereof for a period of not more than 90 consecutive days by written notice to Contractor and Engineer. Such notice will fix the date on which Work will be resumed. Contractor shall resume the Work on the date so fixed. Contractor shall be entitled to an adjustment in the Contract Price or an extension of the Contract Times, or both, directly attributable to any such suspension. Any Change Proposal seeking such adjustments shall be submitted no later than 30 days after the date fixed for resumption of Work.

16.02 *Owner May Terminate for Cause*

A. The occurrence of any one or more of the following events will constitute a default by Contractor and justify termination for cause:

1. Contractor's persistent failure to perform the Work in accordance with the Contract Documents (including, but not limited to, failure to supply sufficient skilled workers or suitable materials or equipment or failure to adhere to the Progress Schedule);

2. Failure of Contractor to perform or otherwise to comply with a material term of the Contract Documents;

3. Contractor's disregard of Laws or Regulations of any public body having jurisdiction; or

4. Contractor's repeated disregard of the authority of Owner or Engineer.

B. If one or more of the events identified in Paragraph 16.02.A occurs, then after giving Contractor (and any surety) ten days written notice that Owner is considering a declaration that Contractor is in default and termination of the contract, Owner may proceed to:

1. declare Contractor to be in default, and give Contractor (and any surety) notice that the Contract is terminated; and

2. enforce the rights available to Owner under any applicable performance bond.

C. Subject to the terms and operation of any applicable performance bond, if Owner has terminated the Contract for cause, Owner may exclude Contractor from the Site, take possession of the Work, incorporate in the Work all materials and equipment stored at the Site or for which Owner has paid Contractor but which are stored elsewhere, and complete the Work as Owner may deem expedient.

D. Owner may not proceed with termination of the Contract under Paragraph 16.02.B if Contractor within seven days of receipt of notice of intent to terminate begins to correct its failure to perform and proceeds diligently to cure such failure.

E. If Owner proceeds as provided in Paragraph 16.02.B, Contractor shall not be entitled to receive any further payment until the Work is completed. If the unpaid balance of the Contract Price exceeds the cost to complete the Work, including all related claims, costs, losses, and damages (including but not limited to all fees and charges of engineers, architects, attorneys, and other professionals) sustained by Owner, such excess will be paid to Contractor. If the cost to complete the Work including such related claims, costs, losses,


**Copyright © 2013 National Society of Professional Engineers, American Council of Engineering Companies, and American Society of Civil Engineers. All rights reserved.**

and damages exceeds such unpaid balance, Contractor shall pay the difference to Owner. Such claims, costs, losses, and damages incurred by Owner will be reviewed by Engineer as to their reasonableness and, when so approved by Engineer, incorporated in a Change Order. When exercising any rights or remedies under this paragraph, Owner shall not be required to obtain the lowest price for the Work performed.

F. Where Contractor's services have been so terminated by Owner, the termination will not affect any rights or remedies of Owner against Contractor then existing or which may thereafter accrue, or any rights or remedies of Owner against Contractor or any surety under any payment bond or performance bond. Any retention or payment of money due Contractor by Owner will not release Contractor from liability.

G. If and to the extent that Contractor has provided a performance bond under the provisions of Paragraph 6.01.A, the provisions of that bond shall govern over any inconsistent provisions of Paragraphs 16.02.B and 16.02.D.

16.03 *Owner May Terminate For Convenience*

A. Upon seven days written notice to Contractor and Engineer, Owner may, without cause and without prejudice to any other right or remedy of Owner, terminate the Contract. In such case, Contractor shall be paid for (without duplication of any items):

1. completed and acceptable Work executed in accordance with the Contract Documents prior to the effective date of termination, including fair and reasonable sums for overhead and profit on such Work;

2. expenses sustained prior to the effective date of termination in performing services and furnishing labor, materials, or equipment as required by the Contract Documents in connection with uncompleted Work, plus fair and reasonable sums for overhead and profit on such expenses; and

3. other reasonable expenses directly attributable to termination, including costs incurred to prepare a termination for convenience cost proposal.

B. Contractor shall not be paid on account of loss of anticipated overhead, profits, or revenue, or other economic loss arising out of or resulting from such termination.

16.04 *Contractor May Stop Work or Terminate*

A. If, through no act or fault of Contractor, (1) the Work is suspended for more than 90 consecutive days by Owner or under an order of court or other public authority, or (2) Engineer fails to act on any Application for Payment within 30 days after it is submitted, or (3) Owner fails for 30 days to pay Contractor any sum finally determined to be due, then Contractor may, upon seven days written notice to Owner and Engineer, and provided Owner or Engineer do not remedy such suspension or failure within that time, terminate the contract and recover from Owner payment on the same terms as provided in Paragraph 16.03.

B. In lieu of terminating the Contract and without prejudice to any other right or remedy, if Engineer has failed to act on an Application for Payment within 30 days after it is submitted, or Owner has failed for 30 days to pay Contractor any sum finally determined to be due, Contractor may, seven days after written notice to Owner and Engineer, stop the Work until payment is made of all such amounts due Contractor, including interest thereon. The provisions of this paragraph are not intended to preclude Contractor from submitting a Change Proposal for an adjustment in Contract Price or Contract Times or otherwise for


**Copyright © 2013 National Society of Professional Engineers, American Council of Engineering Companies, and American Society of Civil Engineers. All rights reserved.**

expenses or damage directly attributable to Contractor's stopping the Work as permitted by this paragraph.

**ARTICLE 17 – FINAL RESOLUTION OF DISPUTES**

17.01 *Methods and Procedures*

A. *Disputes Subject to Final Resolution*: The following disputed matters are subject to final resolution under the provisions of this Article:

1. A timely appeal of an approval in part and denial in part of a Claim, or of a denial in full; and

2. Disputes between Owner and Contractor concerning the Work or obligations under the Contract Documents, and arising after final payment has been made.

B. *Final Resolution of Disputes*: For any dispute subject to resolution under this Article, Owner or Contractor may:

1. elect in writing to invoke the dispute resolution process provided for in the Supplementary Conditions; or

2. agree with the other party to submit the dispute to another dispute resolution process; or

3. if no dispute resolution process is provided for in the Supplementary Conditions or mutually agreed to, give written notice to the other party of the intent to submit the dispute to a court of competent jurisdiction.

**ARTICLE 18 – MISCELLANEOUS**

18.01 *Giving Notice*

A. Whenever any provision of the Contract Documents requires the giving of written notice, it will be deemed to have been validly given if:

1. delivered in person, by a commercial courier service or otherwise, to the individual or to a member of the firm or to an officer of the corporation for which it is intended; or

2. delivered at or sent by registered or certified mail, postage prepaid, to the last business address known to the sender of the notice.

18.02 *Computation of Times*

A. When any period of time is referred to in the Contract by days, it will be computed to exclude the first and include the last day of such period. If the last day of any such period falls on a Saturday or Sunday or on a day made a legal holiday by the law of the applicable jurisdiction, such day will be omitted from the computation.

18.03 *Cumulative Remedies*

A. The duties and obligations imposed by these General Conditions and the rights and remedies available hereunder to the parties hereto are in addition to, and are not to be construed in any way as a limitation of, any rights and remedies available to any or all of them which are otherwise imposed or available by Laws or Regulations, by special warranty or guarantee, or by other provisions of the Contract. The provisions of this paragraph will be as effective as if repeated specifically in the Contract Documents in connection with each particular duty, obligation, right, and remedy to which they apply.


**Copyright © 2013 National Society of Professional Engineers, American Council of Engineering Companies, and American Society of Civil Engineers. All rights reserved.**

18.04 *Limitation of Damages*

A. With respect to any and all Change Proposals, Claims, disputes subject to final resolution, and other matters at issue, neither Owner nor Engineer, nor any of their officers, directors, members, partners, employees, agents, consultants, or subcontractors, shall be liable to Contractor for any claims, costs, losses, or damages sustained by Contractor on or in connection with any other project or anticipated project.

18.05 *No Waiver*

A. A party's non-enforcement of any provision shall not constitute a waiver of that provision, nor shall it affect the enforceability of that provision or of the remainder of this Contract.

18.06 *Survival of Obligations*

A. All representations, indemnifications, warranties, and guarantees made in, required by, or given in accordance with the Contract, as well as all continuing obligations indicated in the Contract, will survive final payment, completion, and acceptance of the Work or termination or completion of the Contract or termination of the services of Contractor.

18.07 *Controlling Law*

A. This Contract is to be governed by the law of the state in which the Project is located.

18.08 *Headings*

A. Article and paragraph headings are inserted for convenience only and do not constitute parts of these General Conditions.


**Copyright © 2013 National Society of Professional Engineers, American Council of Engineering Companies, and American Society of Civil Engineers. All rights reserved.**

# SUPPLEMENTARY CONDITIONS

These Supplementary Conditions amend or supplement the Standard General Conditions of the Construction Contract, EJCDC® C-700 (2013 Edition). All provisions that are not so amended or supplemented remain in full force and effect.

The terms used in these Supplementary Conditions have the meanings stated in the General Conditions. Additional terms used in these Supplementary Conditions have the meanings stated below, which are applicable to both the singular and plural thereof.

The address system used in these Supplementary Conditions is the same as the address system used in the General Conditions, with the prefix "SC" added thereto.

## ARTICLE 1 – DEFINITIONS AND TERMINOLOGY

*SC-1.01 Defined Terms*

**SC-1.01. Add to the list of definitions in Paragraph 1.01.A by inserting the following as numbered items in their proper alphabetical positions:**

**SURETY – The person, firm, or corporation which is bound by the contract bonds with and for Contractor (Principal); and which is held and firmly bound unto Owner for the conditions of obligations set forth in said bonds.**

## ARTICLE 2 – PRELIMINARY MATTERS

*SC-2.01 Delivery of Bonds and Evidence of Insurance*

**SC-2.01 Delete Paragraphs 2.01 B. in their entirety and insert the following in their place:**

**B. Evidence of Contractor's Insurance: When Contractor delivers the executed counterparts of the Agreement to Owner, Contractor shall also deliver to Owner copies of the policies of insurance (including all endorsements, and identification of applicable self-insured retentions and deductibles) required to be provided by Contractor in Article 6. Contractor may block out (redact) any confidential premium or pricing information contained in any policy or endorsement furnished under this provision.**

**SC-2.01 Delete Paragraphs 2.01 C. in its entirety.**

*SC-2.03 Before Starting Construction*

**SC-2.03 Amend the second sentence of Paragraph 2.03.A to read as follows:**

**At the Preconstruction Conference (or as otherwise specifically required by the Contract Documents), Contractor shall submit to Engineer for timely review**

**ARTICLE 4 – PRELIMINARY MATTERS**

*SC-4.01 Commencement of Contract Times; Notice to Proceed*

**SC-4.01 Amend the third sentence of Paragraph 4.01 A. to read as follows:**

**A. In no event will the Contract Times commence to run later than the one hundred eightieth day after the day of Bid opening or the ninetieth day after the Effective Date of the Contract, whichever date is earlier.**

**ARTICLE 5 – AVAILABILITY OF LANDS; SUBSURFACE AND PHYSICAL CONDITIONS; HAZARDOUS ENVIRONMENTAL CONDITIONS**

*SC-5.01 Availability of Lands*

**SC-5.01 Add the following to the end of paragraph 5.01.C:**

**Contractor shall obtain said land rights at his own expense and without liability to the Owner. Contractor shall not enter upon private property without first obtaining written permission from the rightful property owner.**

*SC-5.03 Subsurface and Physical Conditions*

**SC 5.03 Delete Paragraphs 5.03.A and 5.03.B in their entirety and insert the following:**

**A. No reports of explorations or tests of subsurface conditions at or adjacent to the Site, or drawings of physical conditions relating to existing surface or subsurface structures at the Site, are known to Owner.**

*SC-5.06 Hazardous Environmental Conditions*

**SC 5.06 Delete Paragraphs 5.06.A and 5.06.B in their entirety and insert the following:**

**A. No reports or drawings related to Hazardous Environmental Conditions at the Site are known to Owner.**

**B. Not Used.**

**SC-5.06 Delete Paragraph 5.06 I. in its entirety.**

**SC 5.06 Amend the first paragraph of 5.06.J of the General Conditions by changing "(including but not limited to all fees and charges of engineers, architects, attorneys, and other professionals and all court or arbitration or other dispute resolution costs)" to "(including but not limited to all fees and charges of engineers, architects, attorneys, and other professionals and all court or other dispute resolution costs)"**

**ARTICLE 6 – BONDS AND INSURANCE**

*SC-6.01 Performance, Payment, and Other Bonds*

**SC 6.01 Delete Paragraph 6.01.B in its entirety and insert the following:**

**B. All Bonds shall be in the form prescribed by the Contract Documents or other form approved by Owner. All else notwithstanding, the terms of all Bonds shall be substantially in the form prescribed by Chapter 255, Florida Statutes. All Bonds shall be executed by Contractor and a corporate bonding company licensed to transact such business in the State of Florida and named on the**

**current list of "Surety Companies Acceptable on Federal Bonds" as published in the Treasury Department Circular Number 570. Contractor will cause the Bonds to be recorded with the Clerk of the Circuit Court in the county in which the Work is to be performed. Failure to execute bonds in the form prescribed may constitute nonresponsiveness on the part of Contractor. The expense for all Bonds shall be Contractor's responsibility.**

*SC-6.02 Insurance—General Provisions*

**SC-6.02 Add the following paragraph immediately after Paragraph 6.02.B:**

**1. Certificates of insurance shall be issued by a company with a Best's rating of at least B+ authorized to do business in the State of Florida. Owner must approve non-rated insurers. If used, Owner shall be shown as the Certificate Holder, Engineer as Additional Insured and provide for a 30-day cancellation notice.**

**SC-6.02 Delete Paragraph 6.02 D. in its entirety.**

**SC-6.02 Add the following paragraphs immediately after Paragraph 6.02.J:**

**K. No work shall be commenced under this contract until the required Certificate(s) have been provided. Work shall not continue after expiration (or cancellation) until new Certificate(s) have been provided. Non-continuance of work after expiration (or cancellation) of Certificate(s) will not constitute a delay beyond Contractor's control as defined in paragraph 4.05.**

**L. Contractor shall arrange for its insurers' policies to include, or be endorsed to include, a severability of interest/cross liability provision, so that Owner will be treated as if a separate policy were in existence, but without increasing the policy limits.**

**M. Contractor's deductibles/self-insured retentions shall be disclosed to Owner and may be disapproved by the latter. They shall be reduced or eliminated at the option of Owner. Contractor is responsible for the amount of any deductible or self-insured retention.**

**N. Insurance required of Contractor or any other insurance of Contractor shall be considered primary and insurance or self-insurance of Owner shall be considered excess, as may be applicable to claims that arise out of this contract.**

**O. The Contractor shall either (a) require each subcontractor to procure and maintain the same coverage as required of the Contractor, or (b) insure the activities of subcontractors in his own policy.**

**SC-6.05.A. Add the following to the list of items in Paragraph 6.05.A, as numbered items:**

**14. include for the benefit of Owner loss of profits and soft cost coverage including, without limitation, fixed expenses and debt service for a minimum of 12 months with a maximum deductible of 30 days, plus attorneys fees and engineering or other consultants' fees, if not otherwise covered;**

**15. include by express endorsement coverage of damage to Contractor's equipment.**

**ARTICLE 7 – CONTRACTOR'S RESPONSIBILITIES**

*SC-7.02 Labor; Working Hours*

**SC-7.02.B. Amend the first and second sentences of Paragraph 7.02.B to state "…all Work at the Site shall be performed during regular working hours, 7:00 AM through 5:00 PM. Contractor will not perform Work on a Saturday, Sunday, or any legal holiday recognized by the Owner without prior written approval by the Owner. The Owner recognizes the following legal holidays:**

**New Year's Day (January 1)**
**Martin Luther King Jr. Day (3rd Monday in January)**
**President's Day (3rd Monday in February)**
**Good Friday**
**Memorial Day (Last Monday of May)**
**Independence Day (July 4)**
**Labor Day (1st Monday of September)**
**Veteran's Day (November 11)**
**Thanksgiving Day (4th Thursday of November)**
**Day After Thanksgiving (4th Friday of November)**
**Christmas Eve (December 24)**
**Christmas Day (December 25)**
**New Year's Eve (December 31)"**

**SC-7.02.C. Add the following new paragraph immediately after Paragraph 7.02.B:**

**Contractor shall be responsible for the cost of any overtime pay or other expense incurred by the Owner for Engineer's services (including those of the Resident Project Representative, if any), Owner's representative, and construction observation services, occasioned by the performance of Work outside of regular working hours as defined in the Contract Documents. If Contractor is responsible but does not pay, or if the parties are unable to agree as to the amount owed, then Owner may impose a reasonable set-off against payments due under Article 15.**

**SC-7.07 Delete Paragraph 7.07 B. in its entirety.**

*SC-7.11 Record Documents*

**SC-7.11.A. Add the following new paragraph immediately after Paragraph 7.11.A:**

**Annotation of record documents shall be legible, precise, and complete as determined by Engineer. Record drawings shall also meet all additional requirements if any as specified in the Contract Documents including providing an electronic CAD version.**

*SC-7.12 Safety and Protection*

**SC-7.12.A. Add the following new paragraph immediately after Paragraph 7.12.A.3:**

**4. Contractor shall be responsible at all times for precautions to achieve the protection of all persons, including employees and property. Contractor shall make special effort to detect hazardous conditions and shall take prompt action where necessary to avoid accident, injury, or property damage. OSHA and all other applicable safety laws and ordinances shall be followed as well as American National Standards Institute Safety Standards. All accidents, injuries,**

**claims, or potential claims shall be reported promptly to Owner.**

*SC-7.16 Shop Drawings, Samples, and Other Submittals*

**SC-7.16.E. Add the following new paragraph immediately after Paragraph 7.16.E.1:**

**2. Contractor shall reimburse Owner for the charges of Engineer and Engineer's Consultants for costs generated as a result of more than two submittals of any one Shop Drawing or Sample being required for evaluation due to rejection for noncompliance of the original submittal or for lack of information required by the Contract Documents. Owner's reimbursement for the charges shall be a deduction from Contractor's Partial Payment(s).**

*SC-7.18 Indemnification*

**SC-7.18 Delete in its entirety**

**ARTICLE 9 – OWNER'S RESPONSIBILITIES**

*SC-9.02 Replacement of Engineer*

**SC-9.02 Amend paragraph 9.02 of the General Conditions by striking out the following words: ",provided the Contractor makes no reasonable objection."**

*SC-9.11 Evidence of Financial Arrangements*

**SC-9.11 Delete in its entirety**

**ARTICLE 10 – ENGINEER'S STATUS DURING CONSTRUCTION**

*SC-10.03 Project Representative*

**SC-10.03 Add the following new paragraphs immediately after Paragraph 10.03.A:**

**B. The Resident Project Representative (RPR) will be Engineer's representative at the Site, will act as directed by and under the supervision of Engineer, and will confer with Engineer regarding RPR's actions.**

**1. General: RPR's dealings in matters pertaining to the Work in general shall be with Engineer and Contractor. RPR's dealings with Subcontractors shall only be through or with the full knowledge and approval of Contractor. RPR shall generally communicate with Owner only with the knowledge of and under the direction of Engineer.**

**2. Schedules: Review the progress schedule, schedule of Shop Drawing and Sample submittals, and Schedule of Values prepared by Contractor and consult with Engineer concerning acceptability.**

**3. Conferences and Meetings: Attend meetings with Contractor, such as preconstruction conferences, progress meetings, job conferences, and other Project-related meetings, and prepare and circulate copies of minutes thereof.**

**4. Liaison:**

**a. Serve as Engineer's liaison with Contractor. Working principally through Contractor's authorized representative or designee, assist in**

**providing information regarding the provisions and intent of the Contract Documents.**

**b. Assist Engineer in serving as Owner's liaison with Contractor when Contractor's operations affect Owner's on-Site operations.**

**c. Assist in obtaining from Owner additional details or information, when required for proper execution of the Work.**

**5. Interpretation of Contract Documents: Report to Engineer when clarifications and interpretations of the Contract Documents are needed and transmit to Contractor clarifications and interpretations as issued by Engineer.**

**6. Shop Drawings and Samples:**

a. **Record date of receipt of Samples and Contractor-approved Shop Drawings.**

**b. Receive Samples which are furnished at the Site by Contractor, and notify Engineer of availability of Samples for examination.**

**c. Advise Engineer and Contractor of the commencement of any portion of the Work requiring a Shop Drawing or Sample submittal for which RPR believes that the submittal has not been approved by Engineer.**

**7. Modifications: Consider and evaluate Contractor's suggestions for modifications in Drawings or Specifications and report such suggestions, together with RPR's recommendations, if any, to Engineer. Transmit to Contractor in writing decisions as issued by Engineer.**

**8. Review of Work and Rejection of Defective Work:**

**a. Conduct on-Site observations of Contractor's work in progress to assist Engineer in determining if the Work is in general proceeding in accordance with the Contract Documents.**

**b. Report to Engineer whenever RPR believes that any part of Contractor's work in progress is defective, will not produce a completed Project that conforms generally to the Contract Documents, or will imperil the integrity of the design concept of the completed Project as a functioning whole as indicated in the Contract Documents, or has been damaged, or does not meet the requirements of any inspection, test or approval required to be made; and advise Engineer of that part of work in progress that RPR believes should be corrected or rejected or should be uncovered for observation, or requires special testing, inspection or approval.**

**9. Inspections, Tests, and System Start-ups:**

**a. Verify that tests, equipment, and systems start-ups and operating and maintenance training are conducted in the presence of appropriate Owner's personnel, and that Contractor maintains adequate records thereof.**

**b. Observe, record, and report to Engineer appropriate details relative to the test procedures and systems start-ups.**

10. **Records:**

    a. **Prepare a daily report or keep a diary or log book, recording Contractor's hours on the Site, Subcontractors present at the Site, weather conditions, data relative to questions of Change Orders, Field Orders, Work Change Directives, or changed conditions, Site visitors, deliveries of equipment or materials, daily activities, decisions, observations in general, and specific observations in more detail as in the case of observing test procedures; and send copies to Engineer.**

    b. **Record names, addresses, fax numbers, e-mail addresses, web site locations, and telephone numbers of all Contractors, Subcontractors, and major Suppliers of materials and equipment.**

    c. **Maintain records for use in preparing Project documentation.**

11. **Reports:**

    a. **Furnish to Engineer periodic reports as required of progress of the Work and of Contractor's compliance with the Progress Schedule and schedule of Shop Drawing and Sample submittals.**

    b. **Draft and recommend to Engineer proposed Change Orders, Work Change Directives, and Field Orders. Obtain backup material from Contractor.**

    c. **Immediately notify Engineer of the occurrence of any Site accidents, emergencies, acts of God endangering the Work, force majeure or delay events, damage to property by fire or other causes, or the discovery of any Constituent of Concern or Hazardous Environmental Condition.**

12. **Payment Requests: Review applications for payment with Contractor for compliance with the established procedure for their submission and forward with recommendations to Engineer, noting particularly the relationship of the payment requested to the Schedule of Values, Work completed, and materials and equipment delivered at the Site but not incorporated in the Work.**

13. **Certificates, Operation and Maintenance Manuals: During the course of the Work, verify that materials and equipment certificates, operation and maintenance manuals and other data required by the Contract Documents to be assembled and furnished by Contractor are applicable to the items actually installed and in accordance with the Contract Documents, and have these documents delivered to Engineer for review and forwarding to Owner prior to payment for that part of the Work.**

14. **Completion:**

    a. **Participate in Engineer's visits to the Site to determine Substantial Completion, assist in the determination of Substantial Completion and the preparation of a punch list of items to be completed or corrected.**

    b. **Participate in Engineer's final visit to the Site to determine completion of the Work, in the company of Owner and Contractor, and prepare a final punch list of items to be completed and deficiencies to be remedied.**

**c. Observe whether all items on the final list have been completed or corrected and make recommendations to Engineer concerning acceptance and issuance of the notice of acceptability of the work.**

**C. The RPR shall not:**

**1. Authorize any deviation from the Contract Documents or substitution of materials or equipment (including "or-equal" items).**

**2. Exceed limitations of Engineer's authority as set forth in the Contract Documents.**

**3. Undertake any of the responsibilities of Contractor, Subcontractors, or Suppliers.**

**4. Advise on, issue directions relative to, or assume control over any aspect of the means, methods, techniques, sequences or procedures of Contractor's work.**

**5. Advise on, issue directions regarding, or assume control over security or safety practices, precautions, and programs in connection with the activities or operations of Owner or Contractor.**

**6. Participate in specialized field or laboratory tests or inspections conducted off-site by others except as specifically authorized by Engineer.**

**7. Accept Shop Drawing or Sample submittals from anyone other than Contractor.**

**8. Authorize Owner to occupy the Project in whole or in part.**

**ARTICLE 12 – CLAIMS**

*SC-12.01 Claims*

**SC 12.01.B** **Amend the first sentence of paragraph 12.01.B of the General Conditions by changing "(but in no event later than 30 days)" to "(but in no event later than 90 days for the Owner and no later than 10 days for the Contractor)".**

**ARTICLE 13 – COST OF THE WORK; ALLOWANCES; UNIT PRICE WORK**

*SC-13.01 Cost of the Work*

**SC 13.01.B.5.c** **Add the following to the end of Paragraph 13.01.B.5.c:**

**In no case shall rates exceed those published by the current edition of Data Quest Incorporated titled, Rental Rate Blue Book for Construction Equipment, and other procedures established by Florida Department of Transportation.**

**SC 13.01.B.5.f** **Amend the first sentence of paragraph 13.01.B.5.f by striking out the following words: "(except losses and damages within the deductible amounts of property insurance established in accordance with Paragraph 6.05)."**

**SC 13.01.B.5.i** **Add the following new paragraphs immediately after paragraph 13.01.B.5.i:**

**j. The cost of compliance with current local, state and federal safety regulations.**

*SC-13.03 Unit Price Work*

**SC 13.03.E** **Delete Paragraph 13.03.E in its entirety and insert the following in its place:**

**E. The unit price of an item of Unit Price Work shall be subject to reevaluation and adjustment by the Owner under the following conditions:**

**1. if the extended price of a particular item of Unit Price Work amounts to 25 percent or more of the Contract Price (based on estimated quantities at the time of Contract formation) and the variation in the quantity of that particular item of Unit Price Work actually furnished or performed by Contractor differs by more than 25 percent from the estimated quantity of such item indicated in the Agreement; and**

**2. if there is no corresponding adjustment with respect to any other item of Work; and**

**3. if Owner believes that the quantity variation entitles Owner to an adjustment in the unit price, Owner may make a Claim, seeking an adjustment in the Contract Price.**

**SC 13.03.E** **Add the following new paragraphs immediately after Paragraph 13.03.E:**

**F. Owner reserves the right to delete any Unit Price Work with the change, if any, in the Contract Price or in the Contract Times determined in accordance with Article 11.**

**ARTICLE 14 –TESTS AND INSPECTIONS; CORRECTION, REMOVAL OR ACCEPTANCE OF DEFECTIVE WORK**

*SC-14.02 Tests, Inspections, and Approvals*

**SC 14.02.A Add the following to the end of Paragraph 14.02.A:**

**Contractor shall reimburse Owner for the charges of Engineer and Engineer's Consultants for all costs due to work not being ready for tests and/or inspections when the Contractor has notified Engineer that work is ready for tests and/or inspections. Contractor shall reimburse Owner for all failed tests and subsequent retests. Partial payments payable to Contractor shall be distributed, first to reimburse the Owner for such charges, with the balance distributed to the Contractor in accordance with the Contract Documents.**

**ARTICLE 15 – PAYMENTS TO CONTRACTOR; SET-OFFS; COMPLETION; CORRECTION PERIOD**

*SC-15.01 Progress Payments*

**SC 15.01.B.2 Delete Paragraph 15.01.B.2 in its entirety and insert the following in its place:**

**Beginning with the second Application for Payment, each Application shall include an affidavit of Contractor certifying that Contractor has disbursed to all subcontractors and suppliers having an interest in the contract their pro rata shares of the payment out of previous progress payments received by Contractor for all work completed and materials furnished in the previous period, less a retainage withheld by Contractor pursuant to an agreement with a subcontractor. Contractor shall provide a waiver of lien for all stored materials with the second application for payment after submitting application for payment. If the waiver of lien is not provided, current application for payment will be reduced by the value of the stored materials until said time waiver of lien is received or stored materials become incorporated in the Work. Within 30 days of receipt for the final progress payment or any other payments received thereafter except the final payment, Contractor shall pay all subcontractors and suppliers having an interest in the contract their pro rata shares of the payment for all work completed and materials furnished.**

*SC-15.01 Progress Payments*

**SC 15.01.D.1 Change Paragraph 15.01.D.1 to read as follows:**

**After presentation of the Application for Payment to the Owner with Engineer's recommendation, the amount recommended will (subject to the provisions of paragraph 15.01.C) become due and when due, will be paid by Owner to Contractor within thirty (30) days.**

*SC-15.03 Substantial Completion*

**SC 15.03.B Add the following new subparagraph to Paragraph 15.03.B:**

**1. If some or all of the Work has been determined not to be at a point of Substantial Completion and will require re-inspection or re-testing by Engineer, the cost of such re-inspection or re-testing, including the cost of time, travel and living expenses, shall be paid by Contractor to Owner. If Contractor does not pay, or the parties are unable to agree as to the amount owed, then Owner may impose a reasonable set-off against payments due under Article 15.**

# PART 4

# MISCELLANEOUS DOCUMENTS

# Contractor's Application for Payment No.

| | | |
|---|---|---|
| | Application Period: | Application Date: |
| To (Owner): Village of Palm Springs | From (Contractor): | Via (Engineer): |
| Project: | Contract: | |
| Owner's Contract No.: | Contractor's Project No.: | Engineer's Project No.: 400-077.01 |

**Application For Payment**

**Change Order Summary**

| Approved Change Orders | | |
|---|---|---|
| Number | Additions | Deductions |
| | | |
| | | |
| | | |
| | | |
| | | |
| | | |
| | | |
| | | |
| TOTALS | | |
| NET CHANGE BY CHANGE ORDERS | | |

| | |
|---|---|
| **1. ORIGINAL CONTRACT PRICE** | **$** |
| **2. Net change by Change Orders** | **$** |
| **3. Current Contract Price (Line 1 ± 2)** | **$** |
| **4. TOTAL COMPLETED AND STORED TO DATE (Column F total on Progress Estimates)** | **$** |
| **5. RETAINAGE:** | |
| **a. X _____ Work Completed** | **$** |
| **b. X _____ Stored Material** | **$** |
| **c. Total Retainage (Line 5.a + Line 5.b)** | **$** |
| **6. AMOUNT ELIGIBLE TO DATE (Line 4 - Line 5.c)** | **$** |
| **7. LESS PREVIOUS PAYMENTS (Line 6 from prior Application)** | **$** |
| **8. AMOUNT DUE THIS APPLICATION** | **$** |
| **9. BALANCE TO FINISH, PLUS RETAINAGE (Column G total on Progress Estimates + Line 5.c above)** | **$** |

**Contractor's Certification**

The undersigned Contractor certifies, to the best of its knowledge, the following:
(1) All previous progress payments received from Owner on account of Work done under the Contract have been applied on account to discharge Contractor's legitimate obligations incurred in connection with the Work covered by prior Applications for Payment;
(2) Title to all Work, materials and equipment incorporated in said Work, or otherwise listed in or covered by this Application for Payment, will pass to Owner at time of payment free and clear of all Liens, security interests, and encumbrances (except such as are covered by a bond acceptable to Owner indemnifying Owner against any such Liens, security interest, or encumbrances); and
(3) All the Work covered by this Application for Payment is in accordance with the Contract Documents and is not defective.

**Contractor Signature**

| | |
|---|---|
| By: | Date: |

Payment of: $ _____
(Line 8 or other - attach explanation of the other amount)

is recommended by: _____ _____
(Engineer) (Date)

Payment of: $ _____
(Line 8 or other - attach explanation of the other amount)

is approved by: _____ _____
(Owner) (Date)

Approved by: _____ _____
Funding or Financing Entity (if applicable) (Date)


© 2013 National Society of Professional Engineers for EJCDC. All rights reserved.

# CERTIFICATE OF SUBSTANTIAL COMPLETION

| | | | |
|---|---|---|---|
| Owner: | Village of Palm Springs | Owner's Task Order No.: | 227 |
| Contractor: | | Contractor's Project No.: | |
| Engineer: | Eckler Engineering, Inc. | Engineer's Project No.: | 400-077.01 |
| Project: | SCADA System Upgrade<br>Main Water Treatment Plant | Contract Name: | SCADA System Upgrade<br>Main Water Treatment Plant |

**This [preliminary] [final] Certificate of Substantial Completion applies to:**

☐ All Work ☐ The following specified portions of the Work:

## Date of Substantial Completion

The Work to which this Certificate applies has been inspected by authorized representatives of Owner, Contractor, and Engineer, and found to be substantially complete. The Date of Substantial Completion of the Work or portion thereof designated above is hereby established, subject to the provisions of the Contract pertaining to Substantial Completion. The date of Substantial Completion in the final Certificate of Substantial Completion marks the commencement of the contractual correction period and applicable warranties required by the Contract.

A punch list of items to be completed or corrected is attached to this Certificate. This list may not be all-inclusive, and the failure to include any items on such list does not alter the responsibility of the Contractor to complete all Work in accordance with the Contract.

The responsibilities between Owner and Contractor for security, operation, safety, maintenance, heat, utilities, insurance, and warranties upon Owner's use or occupancy of the Work shall be as provided in the Contract, except as amended as follows: *[Note: Amendments of contractual responsibilities recorded in this Certificate should be the product of mutual agreement of Owner and Contractor; see Paragraph 15.03.D of the General Conditions.]*

Amendments to Owner's responsibilities: ☐ None ☐ As follows

Amendments to Contractor's responsibilities: ☐ None ☐ As follows:

The following documents are attached to and made a part of this Certificate: *[punch list; others]*

This Certificate does not constitute an acceptance of Work not in accordance with the Contract Documents, nor is it a release of Contractor's obligation to complete the Work in accordance with the Contract.

| EXECUTED BY ENGINEER: | RECEIVED: | RECEIVED: |
|---|---|---|
| By: _____ (Authorized signature) | By: _____ Owner (Authorized Signature) | By: _____ Contractor (Authorized Signature) |
| Title: _____ | Title: _____ | Title: _____ |
| Date: _____ | Date: _____ | Date: _____ |

**Work Change Directive No.**

Date of Issuance: Effective Date:

Owner: Village of Palm Springs Owner's Task Order No.: 227

Contractor: Contractor's Project No.:

Engineer: Eckler Engineering, Inc. Engineer's Project No.: 400-077.01

Project: SCADA System Upgrade Main Water Treatment Plant Contract Name: SCADA System Upgrade Main Water Treatment Plant

Contractor is directed to proceed promptly with the following change(s):

Description:

Attachments: *[List documents supporting change]*

**Purpose for Work Change Directive:**

Directive to proceed promptly with the Work described herein, prior to agreeing to changes on Contract Price and Contract Time, is issued due to: *[check one or both of the following]*

☐ Non-agreement on pricing of proposed change.

☐ Necessity to proceed for schedule or other Project reasons.

**Estimated Change in Contract Price and Contract Times (non-binding, preliminary):**

Contract Price $ [increase] [decrease].

Contract Time days [increase] [decrease].

**Basis of estimated change in Contract Price:**

☐ Lump Sum ☐ Unit Price

☐ Cost of the Work ☐ Other

| RECOMMENDED: | AUTHORIZED BY: | RECEIVED: |
|---|---|---|
| By: | By: | By: |
| Engineer (Authorized Signature) | Owner (Authorized Signature) | Contractor (Authorized Signature) |
| Title: | Title: | Title: |
| Date: | Date: | Date: |

Approved by Funding Agency (if applicable)

By: Date:

Title:

**Change Order No.** _____

Date of Issuance: Effective Date:

Owner: Village of Palm Springs
Owner's Task Order No.: 227
Contractor:
Contractor's Project No.:
Engineer: Eckler Engineering, Inc.
Engineer's Project No.: 400-077.01
Project: SCADA System Upgrade Main Water Treatment Plant
Contract Name: SCADA System Upgrade Main Water Treatment Plant

The Contract is modified as follows upon execution of this Change Order:

Description:

Attachments: *[List documents supporting change]*

| **CHANGE IN CONTRACT PRICE** | **CHANGE IN CONTRACT TIMES** *[note changes in Milestones if applicable]* |
|---|---|
| Original Contract Price:<br>$_____ | Original Contract Times:<br>Substantial Completion: _____<br>Ready for Final Payment: _____<br>days or dates |
| [Increase] [Decrease] from previously approved Change Orders No. ___ to No. ___:<br>$_____ | [Increase] [Decrease] from previously approved Change Orders No. ___ to No. ___:<br>Substantial Completion: _____<br>Ready for Final Payment: _____<br>days |
| Contract Price prior to this Change Order:<br>$_____ | Contract Times prior to this Change Order:<br>Substantial Completion: _____<br>Ready for Final Payment: _____<br>days or dates |
| [Increase] [Decrease] of this Change Order:<br>$_____ | [Increase] [Decrease] of this Change Order:<br>Substantial Completion: _____<br>Ready for Final Payment: _____<br>days or dates |
| Contract Price incorporating this Change Order:<br>$_____ | Contract Times with all approved Change Orders:<br>Substantial Completion: _____<br>Ready for Final Payment: _____<br>days or dates |

| RECOMMENDED: | ACCEPTED: | ACCEPTED: |
|---|---|---|
| By: _____ | By: _____ | By: _____ |
| Engineer (if required) | Owner (Authorized Signature) | Contractor (Authorized Signature) |
| Title: _____ | Title _____ | Title _____ |
| Date: _____ | Date _____ | Date _____ |

Approved by Funding Agency (if applicable)

By: _____ Date:
Title: _____

**Field Order No.** _____

Date of Issuance: Effective Date:

Owner: Village of Palm Springs Owner's Task Order No.: 227

Contractor: Contractor's Project No.:

Engineer: Eckler Engineering, Inc. Engineer's Project No.: 400-077.01

Project: SCADA System Upgrade Main Water Treatment Plant Contract Name: SCADA System Upgrade Main Water Treatment Plant

Contractor is hereby directed to promptly execute this Field Order, issued in accordance with General Conditions Paragraph 11.01, for minor changes in the Work without changes in Contract Price or Contract Times. If Contractor considers that a change in Contract Price or Contract Times is required, submit a Change Proposal before proceeding with this Work.

Reference: _____ Specification(s) _____ Drawing(s) / Detail(s)

Description:

Attachments:

| ISSUED: | RECEIVED: |
|---|---|
| By: _____ Engineer (Authorized Signature) | By: _____ Contractor (Authorized Signature) |
| Title: _____ | Title: _____ |
| Date: _____ | Date: _____ |

Copy to: Owner

# PART 5




# SPECIFICATIONS

**SECTION 01005**

**GENERAL REQUIREMENTS**

## PART 1 GENERAL

### 1.01 WORK INCLUDED

A. Written and drawn Work specified in these Contract Documents are the sole responsibility of the CONTRACTOR.

B. Provide materials, equipment, and incidentals necessary for proper completion of the Work required by the Specifications and as shown on the Drawings, using qualified labor and supervision.

C. Summary of Work can be found in Section 01010 - Summary of Work. Obtain and pay for required permits. Perform and complete the work in the manner best calculated to promote rapid construction consistent with safety of life and property and to the satisfaction of the ENGINEER and OWNER, and in strict accordance with the Contract Documents. Clean up the work and maintain it during and after construction, until accepted, perform work and pay costs incidental thereto. Repair or restore structures and property that may be damaged or disturbed during performance of the work.

D. The cost of incidental work described in these GENERAL REQUIREMENTS, for which there are no specific Contract Items, shall be considered as part of the general cost of doing the work and shall be included in the prices for the various Contract Items. No additional payment will be made therefor.

E. Provide and maintain such modern plant, tools, and equipment as may be necessary, to perform in a satisfactory and acceptable manner all the work required by this Contract. Only equipment of established reputation and proven efficiency shall be used.

F. The CONTRACTOR is solely responsible for the adequacy of his workmanship, materials, and equipment, prior review of the ENGINEER notwithstanding.

### 1.02 WORK TO BE PERFORMED BY OTHERS

A. During the construction period for this project, the OWNER (either with his own forces or under a separate contract) may be performing work that will require the cooperation of the CONTRACTORs in scheduling and coordination to avoid conflicts.

### 1.03 PUBLIC UTILITY INSTALLATIONS AND STRUCTURES

A. Public utility installations and structures shall be understood to include poles, tracks, pipes, wires, conduits, house service connections, vaults, manholes, other appurtenances, and facilities pertaining thereto whether owned or controlled by the OWNER, other governmental bodies or privately owned by individuals, firms, and corporations, used to serve the public with transportation, traffic control, gas, electricity, telephone, cable TV, sewerage collection, drainage collection, potable water, irrigation water, and other public and private property which may be affected by the work shall be deemed included hereunder.

B. The Contract Documents contain data relative to existing public utility installations and structures above and below the ground surface. These data are not guaranteed as to their completeness or accuracy and it is the responsibility of the CONTRACTOR to make his own investigations to inform himself fully of the character, condition and extent of all such installations and structures as may be encountered and as may affect the construction operations.

C. Protect public utility installations and structures from damage during the work. Arrange construction operations as to avoid damage to these facilities. Provide required protective devices and construction including but not limited to temporary pipe supports at CONTRACTOR expense. Repair existing public utilities damaged by the CONTRACTOR which are shown on the Plans or have been located in the field by the utility, at CONTRACTOR expense, as directed by the ENGINEER. No separate payment shall be made for such protective devices or repairs to public utility installations or structures.

D. The CONTRACTOR is solely and directly responsible to the OWNER and operators of such properties for any damage, injury, expense, loss, inconvenience, delay, suits, actions, and claims of any character brought because of any injuries or damage which may result from the construction operations under this Contract.

E. Neither the OWNER nor its officers or agents will be responsible to the CONTRACTOR for damages as a result of the Contractor's failure to protect utilities encountered in the work.

F. Public utility installations or structures owned or controlled by the OWNER or another governmental body which are shown on the Drawings to be removed, relocated, replaced or rebuilt by the CONTRACTOR shall be considered as a part of the general cost of doing the work and shall be included in the prices bid for the various contract items. No separate payment shall be made therefore.

G. Where public utility installations or structures owned or controlled by the OWNER, another governmental body or public agency are encountered during the course of the work, and are not indicated on the Drawings or in the Specifications, and when, in the opinion of the ENGINEER, removal, relocation, replacement, or rebuilding is necessary to complete the work under this Contract, such work shall be accomplished by the utility having jurisdiction, or such work may be ordered, in writing by the utility for the CONTRACTOR to accomplish. If such work is accomplished by the utility having jurisdiction, it will be carried out expeditiously and the CONTRACTOR shall give full cooperation to permit the utility to complete the removal, relocation, replacement or rebuilding as required. If such work is accomplished by the CONTRACTOR, it will be paid for as extra work as provided in the Agreement.

H. In the event of interruption to domestic water, sewer, storm drain, or other utility services as a result of accidental breakage due to construction operations, promptly notify the proper authority. Cooperate with said authority in restoration of service as promptly as possible and bear all costs of repair. In no case shall interruption of any water or utility service be allowed to exist outside working hours unless prior approval is granted.

I. During performance of the work employ approved methods, exercise reasonable care and skill so as to avoid unnecessary delay, injury, damage, and destruction of public utility installations and structures, avoid unnecessary interference with, or interruption of, public utility services, and cooperate fully with the OWNERs thereof to that end.

J. Perform maintenance, repair, removal, relocation, or rebuilding of public utility installations and structures, when accomplished by the CONTRACTOR as specified, by methods approved by the owner of the utility.

K. Provide written notice to OWNER and other governmental utility departments and other OWNERs of public utilities of the location of his proposed construction operations, at least forty-eight hours in advance of breaking ground in any area or on any unit of the work. This can be accomplished by making the appropriate contact with the following utility companies:

| Name of Utility | Responsible Authority | Telephone No. |
|---|---|---|
| Sunshine State One Call of Florida, Inc. | General Utility Location | (800) 432-4770 |

**1.04 TEMPORARY SHUTDOWN OF EXISTING OPERATIONS AND UTILITIES**

A. Connections to existing services or utilities, or other work that requires the temporary shutdown of any existing operations or utilities shall be planned in detail with appropriate scheduling of the Work and coordinated with the OWNER or ENGINEER. The approved schedule for shutdown or restart shall be indicated on the CONTRACTOR's Progress Schedule, and advance notice shall be given in order that the OWNER or ENGINEER may witness the shutdown, tie-in and startup and coordinate with affected people.

B. Materials and equipment (including emergency equipment) necessary to expedite the tie-in shall be on hand prior to the shutdown of existing services or utilities.

**1.05 INTERFERING STRUCTURES**

A. Take necessary precautions to prevent damage to existing structures whether on the surface, aboveground or underground. An attempt has been made to show major structures on the Drawings. The completeness and accuracy of information shown cannot be guaranteed, and it is presented simply as a guide to avoid know possible difficulties.

B. Protect underground and above ground existing structures from damage, whether or not they lie within the limits of the existing right-of-way and/or additional right-of-way and easements obtained by the OWNER. Where such existing fences, gates, barns, sheds, buildings or any other structure must be removed during construction, restore to their original condition to the satisfaction of the property owner involved at the CONTRACTOR's own expense. Notify the ENGINEER of any damaged underground structure and make repairs or replacements before backfilling.

C. Without additional compensation, the CONTRACTOR may remove and replace in a condition good as or better than original, such small

miscellaneous structures as fences, mailboxes and signposts that interfere with the CONTRACTOR's operations.

**1.06 FIELD RELOCATION**

A. During the progress of construction, it is expected that minor relocations of the work may be necessary. Such relocations shall be made only by direction of the ENGINEER. If existing structures are encountered which prevent the construction, and which are not properly shown on the drawings, notify the ENGINEER before continuing with the construction in order that the ENGINEER my make such field revisions as necessary to avoid conflict with the existing structures. If the structure is encountered, and shall proceed with the construction despite this interference, he shall do so at his own risk.

**1.07 EASEMENTS**

A. Where portions of the work are located on public or private property, easements and permits will be obtained by the OWNER. Easements will provide for the use of property for construction purposes to the extent indicated on the easements. Copies of these easements and permits are available upon request to the OWNER. It shall be the CONTRACTOR's responsibility to determine the adequacy of the easement obtained in every case and to abide by all requirements and provisions of the easement or permit. The CONTRACTOR shall confine his construction operations to within the easement limits or street right-of-way limits or make special arrangements with the property owners or appropriate public agency for the additional area required. Any damage to property, either inside or outside the limits of the easements provided by the OWNER, shall be the responsibility of the CONTRACTOR as specified herein. The CONTRACTOR shall remove, protect and replace all fences or other items encountered on public or private property. Before final payment will be authorized by the ENGINEER, the CONTRACTOR will be required to furnish the OWNER with written releases from property owners or public agencies where side agreements or special easements have been made by the CONTRACTOR of where the CONTRACTOR's operations, for any reason, have not been kept within the construction right-of-way obtained by the OWNER.

B. It is anticipated that the required easements and permits will be obtained before construction is started. However should the procurement of any easement or permit be delayed, the CONTRACTOR shall schedule and perform the work around these areas until such time as the easement or permit has been secured.

**1.08 LAND MONUMENTS**

A. Notify the ENGINEER of any existing federal, state, county, city and private land monuments encountered. Private monuments that are within 5 feet of the trench centerline shall be preserved, or replaced by a licensed surveyor at the CONTRACTOR's expense. Notify the ENGINEER when government monuments are encountered at least 2 weeks in advance of the proposed construction in order that the ENGINEER will have ample opportunity to notify the proper authority and reference these monuments for later replacement.

## 1.09 DRAWINGS AND SPECIFICATIONS

A. Drawings

The Drawings referred to in the Contract Documents bear the general project name and number as shown in the Invitation to Bid.

When obtaining data and information from the Drawings, figures shall be used in preference to scaled dimensions, and large scale drawings in preference to small scale drawings.

B. Copies furnished to CONTRACTOR

After the Contract has been executed, the CONTRACTOR will be furnished with three (3) sets of paper prints, the same size as the original drawings and three (3) copies of the Specifications. Additional copies of the Plans and Specifications, when requested, may be furnished to the CONTRACTOR at cost of reproduction.

The CONTRACTOR shall furnish each of the subcontractors, manufacturers, and material men such copies of the Contract Documents as may be required for their work.

C. Supplementary Drawings

When, in the opinion of the ENGINEER, it becomes necessary to explain more fully the work to be done or to illustrate the work further or to show any changes which may be required, drawings known as Supplementary Drawings, with specifications pertaining thereto, will be prepared by the ENGINEER and five (5) paper prints thereof will be given to the CONTRACTOR.

The Supplementary Drawings shall be binding upon the CONTRACTOR with the same force as the Drawings. Where such Supplementary Drawings require either less or more than the estimated quantities of work, credit to the OWNER or compensation therefor to the CONTRACTOR shall be subject to the terms of the Agreement.

D. CONTRACTOR To Check Drawings and Data

Verify all dimensions, quantities and details shown on the Drawings, Supplementary Drawings, schedules, Specifications or other data received from the ENGINEER, and shall notify him of all errors, omissions, conflicts, and discrepancies found therein. Failure to discover or correct errors, conflicts or discrepancies shall not relieve the CONTRACTOR of full responsibility for unsatisfactory work, faulty construction or improper operation resulting therefrom nor from rectifying such conditions at his own expense. He will not be allowed to take advantage of any errors or omissions, as full instructions will be furnished by the ENGINEER, should such errors or omissions be discovered. All schedules are given for the convenience of the ENGINEER and the CONTRACTOR and are not guaranteed to be complete. The CONTRACTOR shall assume all responsibility for the making of estimates of the size, kind, and quality of materials and equipment included in work to be done under the Contract.

E. Specifications

Each Technical Specification Section consists of three parts: General, Products and Execution. The General part contains General Requirements which govern the Work. Products and Execution modify and supplement these by detailed requirements for the work and shall always govern whenever there appears to be a conflict.

F. Intent

All work called for in the Specifications applicable to this Contract, but not shown on the Drawings in their present form, or vice versa, shall be of like effect as if shown or mentioned in both. Work not specified in either the Drawings or in the Specifications, but involved in carrying out their intent or in the complete and proper execution of the work, is required and shall be performed by the CONTRACTOR as though it were specifically delineated or described.

The apparent silence of the Specifications as to any detail, or the apparent omission from them of a detailed description concerning any work to be done and materials to be furnished, shall be regarded as meaning that only the best general practice is to prevail and that only material and workmanship of the best quality is to be used, and interpretation of these Specifications shall be made upon that basis.

**1.10 MATERIALS AND EQUIPMENT**

A. General

Materials and equipment to be incorporated in the Work must be new and unused. The use of reconditioned or refurbished materials and equipment will not be allowed.

B. Manufacturer

The names of proposed manufacturers, material men, suppliers and dealers who are to furnish materials, fixtures, equipment, appliances or other fittings shall be submitted to the ENGINEER for review as early as possible, to afford proper investigation and checking. Such review must be obtained before Shop Drawings will be checked. No manufacturer will be acceptable to furnish any materials under this Contract unless it shall be of good reputation and have a plant of ample capacity. Manufacturers shall, upon the request of the ENGINEER, be required to submit evidence that it has manufactured a similar product to the one specified and that it has been previously used for a like purpose for a sufficient length of time to demonstrate its satisfactory performance.

All transactions with the manufacturers or subcontractors shall be through the CONTRACTOR, unless the contractor shall request, in writing to the ENGINEER, that the manufacturer or subcontractor deal directly with the ENGINEER. Any such transactions shall not in any way release the CONTRACTOR from his full responsibility under this Contract.

Any two or more pieces of material or equipment of the same kind, type or classification, and being used for identical types of service shall be made by the same manufacturer.

C. Delivery

Deliver materials in ample quantities to insure the most speedy and uninterrupted progress of the work so as to complete the work within the allotted time. Also coordinate deliveries in order to avoid delay in, or impediment of, the progress of the work of any related CONTRACTOR.

D. Tools and Accessories

Unless otherwise stated in the Contract Documents, furnish with each type, kind or size of equipment, one complete set of suitably marked high grade special tools and appliances which may be needed to adjust, operate, maintain or repair the equipment. Such tools and appliances shall be furnished in painted steel cases, properly labeled and equipped with good grade cylinder locks and duplicate keys.

Furnish spare parts as specified.

Provide with each piece of equipment a substantial nameplate, securely fastened in place and clearly inscribed with the manufacturer's name, year of manufacture, serial number, weight and principal rating data.

E. Installation of Equipment

Have on hand sufficient proper equipment and machinery of ample capacity to facilitate the work and to handle all emergencies normally encountered in work of this character.

Erect equipment in a neat and workmanlike manner on the foundations at the locations and elevations shown on the Drawings. Correctly align, level, and adjust equipment for satisfactory operation and install so that proper and necessary connections can be made readily between the various units.

F. Service of Manufacturer's ENGINEER

The Contract prices for equipment shall include the cost of furnishing a competent and experienced engineer or superintendent who shall represent the manufacturer and shall assist the CONTRACTOR, when required, to install, adjust, test and place in operation the equipment in conformity with the Contract Documents. After the equipment is placed in permanent operation by the OWNER, such engineer or superintendent shall make all adjustments and tests required by the ENGINEER to prove that such equipment is proper and in satisfactory operating condition, and shall instruct such personnel as may be designated by the OWNER in the proper operation and maintenance of such equipment.

**1.11 INSPECTION AND TESTING**

A. General

Inspection and testing of materials will be performed by a representative of the OWNER unless otherwise specified.

For tests specified to be made by the CONTRACTOR, the testing personnel shall make the necessary inspections and tests and the reports thereof shall be in such form as will facilitate checking to determine compliance with the Contract Documents. Five copies of the reports shall be submitted and authoritative certification thereof must be furnished to the ENGINEER as a prerequisite for the acceptance of any material or equipment.

If, in the making of any test of any material or equipment, it is ascertained by the ENGINEER that the material or equipment does not comply with the Contract, the CONTRACTOR will be notified thereof and he will be directed to refrain from delivering said material or equipment, or to remove it promptly from the site or from the work and replace it with acceptable material, without cost to the OWNER.

Tests of electrical and mechanical equipment and appliances shall be conducted in accordance with recognized test codes of the ANSI, ASME, or the IEEE, except as may otherwise be stated herein.

The CONTRACTOR shall be fully responsible for the proper operation of equipment during tests and instruction periods and shall neither have nor make any claim for damage which may occur to equipment prior to the time when the OWNER formally takes over the operation thereof.

B. Costs

Inspection and testing of materials furnished under this Contract will be performed by the OWNER or duly authorized inspection engineers or inspection bureaus without cost to the CONTRACTOR, unless otherwise expressly specified.

The cost of shop and field tests of equipment and of certain other tests specifically called for in the Contract Documents shall be borne by the CONTRACTOR and such costs shall be deemed to be included in the Contract price.

Materials and equipment submitted by the CONTRACTOR as the equivalent to those specifically named in the Contract may be tested by the OWNER for compliance. The CONTRACTOR shall reimburse the OWNER for the expenditures incurred in making such tests on materials and equipment which are rejected for non-compliance.

C. Inspection of Materials

Give notice in writing to the ENGINEER, sufficiently in advance of intention to commence the manufacture or preparation of materials especially manufactured or prepared for use in or as part of the permanent construction. Such notice shall contain a request for inspection, the date of commencement and the expected date of completion of the manufacture or preparation of materials. Upon receipt of such notice, the ENGINEER will arrange to have a representative present at such times during the manufacture as may be necessary to inspect the materials or he will notify the CONTRACTOR that the inspection will be made at a point other than the point of manufacture, or he will notify the CONTRACTOR that inspection will be waived. The CONTRACTOR must comply with these provisions before shipping any material. Such inspection shall not release the CONTRACTOR from the responsibility for furnishing materials meeting the requirements of the Contract Documents.

D. Certificate of Manufacture

When inspection is waived or when the ENGINEER so requires, the CONTRACTOR shall furnish to him authoritative evidence in the form of Certificates of Manufacture that the materials to be used in the work have been manufactured and tested in conformity with the Contract Documents. These certificates shall be notarized and shall include copies of the results of physical tests and chemical analyses, where necessary, that have been made directly on the product or on similar products of the manufacturer.

E. Shop Tests of Operating Equipment

Test each piece of equipment for which pressure, duty, capacity, rating, efficiency, performance, function, or special requirements are specified in the shop of the maker in a manner which shall conclusively prove that its characteristics comply fully with the requirements of the Contract documents. No such equipment shall be shipped to the work until the ENGINEER notifies the CONTRACTOR, in writing, that the results of such tests are acceptable.

Five copies of the manufacturer's actual test data and interpreted results thereof, accompanied by a certificate of authenticity sworn to by a responsible official of the manufacturing company, shall be forwarded to the ENGINEER for approval.

The cost of shop tests and of furnishing manufacturer's preliminary and shop test data of operating equipment shall be borne by the CONTRACTOR.

F. Preliminary Field Tests

As soon as conditions permit, provide materials, equipment, and incidentals necessary for proper completion of the preliminary field tests of equipment, using qualified labor and supervision. If the preliminary field tests disclose any equipment furnished under this Contract which does not comply with the requirements of the Contract Documents, the CONTRACTOR shall, prior to the acceptance tests, make all changes, adjustments and replacements required. The supplier and furnishing contractor shall assist in the preliminary field tests as applicable.

G. Final Field Tests

Upon completion of the work and prior to final payment, all equipment and piping installed under this Contract shall be subjected to acceptance tests as specified or required to prove compliance with the Contract Documents.

Provide materials, equipment, fuel, energy, water, and incidentals necessary for proper completion of the acceptance tests and final field tests required by the Specifications and as shown on the Drawings, using qualified labor and supervision.

H. Failure of Tests

Any defects in the materials and equipment or their failure to meet the tests, guarantees or requirements of the Contract Documents shall

be promptly corrected by the CONTRACTOR by replacements or otherwise. The decision of the ENGINEER as to whether or not the CONTRACTOR has fulfilled his obligations under the Contract shall be final and conclusive. If the CONTRACTOR fails to make these corrections or if the improved materials and equipment, when tested, shall again fail to meet the guarantees or specified requirements, the OWNER, notwithstanding its partial payment for work, and materials and equipment, may reject the materials and equipment and may order the CONTRACTOR to remove them from the site at his own expense.

If the failure during testing is fully or partly due to the equipment provided by the CONTRACTOR, as determined by the ENGINEER, the Furnishing CONTRACTOR shall make all required improvements at no cost to the OWNER.

In case the OWNER rejects any materials and equipment, then the CONTRACTOR shall replace the rejected materials and equipment within a reasonable time. If he fails to do so, the OWNER may, after the expiration of a period of thirty (30) calendar days after giving him notice in writing, proceed to replace such rejected materials and equipment, and the cost thereof shall be deducted from any compensation due or which may become due the CONTRACTOR under his Contract.

The OWNER agrees to obtain other equipment within a reasonable time and the CONTRACTOR agrees that the OWNER may use the equipment furnished by him without rental or other charges until the new equipment is obtained.

I. Final Inspection

During such final inspections, the work shall be clean and free from water. In no case will the final estimate be prepared until the CONTRACTOR has complied with all requirements set forth and the ENGINEER has made his final inspection of the entire work and is satisfied that the entire work is properly and satisfactorily constructed in accordance with the requirements of the Contract documents.

## 1.12 TEMPORARY STRUCTURES

A. Responsibility for Temporary Structures

In accepting the Contract, the CONTRACTOR assumes full responsibility for the sufficiency and safety of all temporary structures or work and for any damage which may result from their failure or their improper construction, maintenance or operation and will indemnify and save harmless the OWNER and ENGINEER from all claims, suits or actions and damages or costs of every description arising by reason of failure to comply with the above provisions.

## 1.13 TEMPORARY SAFETY SERVICES

A. Accident Prevention

Precautions shall be exercised at all times for the protection of person and property. The safety provisions of applicable laws, building and construction codes shall be observed. Comply with the U.S. Department of Labor Safety and Health Regulations for construction promulgated under the Occupational Safety and Health Act

of 1970 (PL 910-596), and under Section 107 of the contract Work. Hours and Safety Standards Act (PL 91-54), except where state and local safety standards exceed the federal requirements and except where state safety standards have been approved by the Secretary of labor in accordance with provisions of the Occupational Safety and Health Act, shall be complied with.

B. First Aid

Keep at each location where work is in progress, a completely equipped first aid kit and provide ready access thereto at all times when men are employed on the work.

**1.14 TRAFFIC MAINTENANCE AND SAFETY**

A. Comply with all rules and regulation of the state, county and city authorities regarding closing or restricting the use of public streets or highways. No public or private road shall be closed, except by express permission of the OWNER. Conduct the work so as to assure the least possible obstruction to traffic and normal commercial pursuits. Protect all obstructions within traveled roadways by installing approved signs, barricades and lights where necessary for the safety of the public. The convenience of the general public and residents adjacent to the project and the protection of persons and property are of prime importance and shall be provided for in an adequate and satisfactory manner.

B. Where traffic will pass over trenches after they are backfilled and before they are paved, the top of the trench shall be maintained in a condition that will allow normal vehicular traffic to pass over. Temporary access driveways must be provided where required. Cleanup operations shall follow immediately behind backfilling and the work site shall be kept in an orderly condition at all times.

C. When flagmen and guards are required by regulation or when deemed necessary for safety, they shall be furnished with approved orange wearing apparel and other regulation traffic-control devices.

**1.15 PROTECTION OF PROPERTY**

A. Protect stored materials, cultivated trees and crops and other items located adjacent to the proposed work. Notify property owners affected by the construction at least 48 hours in advance of the time construction begins. During construction operations, construct and maintain such facilities as may be required to provide access by all property owners to their property. No person shall be cut off from access to his residence or place of business for a period exceeding 8 hours, unless the CONTRACTOR has made special arrangements with the affected persons.

**1.16 ACCESS FOR POLICE, FIRE, AND POSTAL SERVICE**

A. Notify the fire department and police department before closing any street or portion thereof. No closing shall be made without the OWNER's approval. Notify said departments when the streets are again passable for emergency vehicles. Do not block off emergency vehicle access to consecutive arterial crossings or dead-end streets, in excess of 300 linear feet, without special written permission from

the fire department. Conduct operations with the least interference to fire equipment access and at no time prevent such access.

B. The CONTRACTOR shall lease a night emergency telephone number or numbers with the police department so that contact may be made easily at all times in case of barricade and flare trouble or other emergencies.

C. Maintain postal service facilities in accordance with the requirements of the U.S. Postal Service. Move mailboxes to temporary locations designated by the U.S. Postal Service and at the completion of the work in each area, replace them in their original location and in a condition satisfactory to the U.S. Postal Service.

**1.17 SITE RESTORATION AND CLEANUP**

A. At all times during the work, keep the premises clean and orderly and upon completion of the work, repair all damage caused by equipment and leave the project free of rubbish or excess materials of any kind.

B. Stockpile excavated materials in a manner that will cause the least damage to adjacent lawns, grassed areas, gardens, shrubbery, or fences, regardless of whether these are on private property or on state, county or city rights-of-way. Remove all excavated materials from grassed and planted areas and leave these surfaces in a condition equivalent to their original conditions.

C. All existing drainage ditches and culverts shall be reopened and graded and natural drainage restored. Restore culverts broken or damaged to their original condition and location.

D. Upon completion of pipe laying and backfilling operations, hand-rake and drag all former grassed and planted areas leaving all disturbed areas free from rocks, gravel, clay or any other foreign materials and ready, in all aspects, for planting. The finished surface shall conform to the original surface and shall be free-draining and free from holes, ruts, rough spots or other surface features detrimental to a seeded area.

E. No trees, except those specifically shown on the Drawings to be removed, shall be removed without the express approval of the ENGINEER. Removed trees will be disposed of off the work site by the CONTRACTOR.

F. Originally seeded areas outside dedicated rights-of-way or easements shall be fertilized and reseeded with first-quality seed or planted with new sod as approved by the property owner. All ground preparation, reseeding and sodding shall be done in accordance with the best accepted practices for lawn planting. The CONTRACTOR shall be responsible for obtaining a satisfactory grass turf acceptable to the property owner.

G. Thoroughly clean all spilled dirt, gravel or other foreign material caused by the construction operations from all streets and roads at the conclusion of each day's operation.

## 1.18 PRESERVATION OF IRRIGATION AND DRAINAGE DITCHES

A. Arrange schedules so that construction will not interfere with the irrigation of cultivated lands or pasturelands. Construction may proceed during the irrigation season provided the CONTRACTOR constructs, at his own expense, temporary irrigation ditches, turnouts and miscellaneous structures acceptable to the owner of the property.

B. After backfilling of the trenches, restore all irrigation and storm drain ditches destroyed, damaged or otherwise modified during construction to a condition equivalent, in the opinion of the ENGINEER, to the condition of the ditch before construction. Ditches to be reconstructed shall be built in their original locations.

## 1.19 LINES AND GRADES

A. Grade

All work under this Contract shall be constructed in accordance with the lines and grades shown on the Plans, or as given by the ENGINEER. The full responsibility for keeping alignment and grade shall rest upon the CONTRACTOR.

B. Surveys

Furnish and maintain stakes and other such materials, and give such assistance, including qualified helpers, as may be required by the ENGINEER for setting reference marks. Check such reference marks by such means as deemed necessary and, before using them, call the ENGINEER's attention to any inaccuracies. Establish all working or construction lines and grades as required from the reference marks set by the ENGINEER, and be solely responsible for the accuracy thereof. Lines and grades are subject to the check and review of the ENGINEER.

Keep the ENGINEER informed a reasonable time in advance as to need for line and grade reference marks, in order that they may be furnished and all necessary measurements made for record and payment with the minimum of inconvenience to the ENGINEER or of delay to the CONTRACTOR.

It is the intention not to delay the Work for the establishment of reference marks but, when necessary, working operations shall be suspended for such reasonable time as the ENGINEER may require for this purpose.

C. Safeguarding Marks

Safeguard all points, stakes, grade marks, monuments and bench marks made or established on the work, bear the cost of reestablishing them if disturbed, and bear the entire expense of rectifying work improperly installed due to not maintaining or protecting or to removing without authorization such established points, stakes and marks. Safeguard all existing and known property corners, monuments and marks adjacent to but not related to the work and, if required, bear the cost of reestablishing them if disturbed or destroyed.

D. Datum Plane

All elevations indicated or specified refer to the North American Vertical Datum of 1988 (NAVD 88), unless otherwise noted.

**1.21 PROTECTION OF WORK AND PUBLIC**

A. Barriers and Lights

During the prosecution of the work, put up and maintain, at all times, such barriers and lights as will effectually prevent accidents. Provide suitable barricades, yellow lights, "danger" or "caution" or "street closed" signs and watchmen at all places where the work causes obstructions to the normal traffic or constitutes in any way a hazard to the public.

B. Noise

Eliminate noise to as great as extent as practicable at all times. Air compressing plants shall be equipped with silencers and the exhaust of all gasoline motors or other power equipment shall be provided with mufflers. In the vicinity of hospitals and schools, special care shall be used to avoid noise or other nuisances. Strictly observe all local regulations and ordinances covering noise control.

Except in the event of an emergency, no work shall be done between the hours of 7:00 P.M. and 7:00 A.M., or on Saturdays, Sundays, or legal holidays. If the proper and efficient prosecution of the work requires operations during these hours, written permission of the ENGINEER shall be obtained before starting such items of the work.

C. Access to Public Services

Neither the materials excavated nor the materials or plant used in the construction of the work shall be so placed as to prevent free access to all fire hydrants, valves or manholes.

D. Dust Prevention

Give all unpaved streets, roads, detours or haul roads used in the construction area an approved dust-preventative treatment or periodically water to prevent dust. Applicable environmental regulations for dust prevention shall be strictly enforced.

**1.22 CUTTING AND PATCHING**

A. Do all cutting, fitting or patching of this portion of the Work that may be required to make the several parts thereof join and coordinate in a manner satisfactory to the ENGINEER and in accordance with the Drawings and Specifications. The Work must be done by competent workmen skilled in the trade required by the restoration.

**1.23 CLEANING**

A. During construction of the Work, keep the site of the Work and adjacent premises as free from material, debris and rubbish as is practicable and remove same from any portion of the site if, in the

opinion of the ENGINEER, such material, debris, or rubbish constitutes a nuisance or is objectionable.

Remove from the site all surplus materials and temporary structures when no further need therefore develops. Clean up all spillage and incur all associated costs including, but not limited to, costs related to repair and maintenance resulting from damages of such spills.

B. Final Cleaning

At the conclusion of the work, all erection plant, tools, temporary structures and materials belonging to the CONTRACTOR shall be promptly taken away, and remove and promptly dispose of all water, dirt, rubbish or any other foreign substances.

Thoroughly clean all equipment and materials installed and deliver such materials and equipment undamaged in a bright, clean, polished and new operating condition.

## 1.24 MISCELLANEOUS

A. Protection Against Siltation and Bank Erosion
1. Arrange operations to minimize siltation and bank erosion on construction sites and on existing or proposed water courses and drainage ditches.
2. Remove any siltation deposits and correct any erosion problems as recommended by the ENGINEER which results from the construction operations.

B. Protection of Wetland Areas

Properly dispose of all surplus material, including spoil, in accordance with Local, State and Federal regulations. Under no circumstances shall surplus material be disposed of in wetland areas as defined by the Florida Department of Environmental Regulation.

C. Existing Facilities

The work shall be so conducted to maintain existing facilities in operation insofar as is possible. Requirements and schedules of operations for maintaining existing facilities in service during construction shall be as described in the Specific Provisions.

D. Use of Chemicals

All chemicals used during project construction or furnished for project operation, whether herbicide, pesticide, disinfection, polymer, reactant, or of other classification, must show approval of either EPA or USDA. Use of all such chemicals and disposal of residues shall be in strict conformance with instructions.

E. Use of Explosives

The use of any type of explosive to carry out any portion of the work is strictly prohibited.

**PART 2 PRODUCTS**

Not Used.

**PART 3 EXECUTION**

Not Used.

END OF SECTION

**SECTION 01010**

**SUMMARY OF WORK**

## PART 1 GENERAL

### 1.01 WORK INCLUDED

A. All of the work under this contract is located at the following site:

Village Main WTP: 360 Davis Road, Palm Springs, FL 33461

B. Furnish all labor, materials, equipment, tools, services and incidentals to complete all work required by these Specifications and as shown on the Drawings.

C. Perform the work complete, in place, and ready for continuous service, and include repairs, testing, permits, cleanup, replacements and restoration required as a result of damages caused during this construction.

D. All materials, equipment, skills, tools and labor which are reasonably and properly inferable and necessary for the proper completion of the work in a substantial manner and in compliance with the requirements stated or implied by these Specifications or Drawings shall be furnished and installed by the CONTRACTOR whether specifically indicated in the Contract Documents or not.

E. Comply with all Municipal, County, State, Federal, and other codes which are applicable to the proposed construction work.

### 1.02 GENERAL DESCRIPTION OF WORK

A. The project consists of upgrades and expansion of existing SCADA system and network at the Main Water Treatment Plant.

### 1.03 DETAILED DESCRIPTION OF COMPONENTS

A. Removal of existing equipment and components indicated by Drawings.

B. Furnish and install new control panels and remote I/O panels.

C. Furnish and install new fiber optic SCADA network.

D. Upgrade of SCADA head end network and computer systems per Drawings and Specifications.

E. SCADA system software upgrade inclusive of all programming.

F. Electrical Work.

G. Site restoration as indicated on the drawings and specified herein.

H. Provide all required survey work for layout, construction and record data.

I. Professional preconstruction video-audio tape of existing conditions of project impact areas as specified in Section 01720 - Project Record Drawings.

J. Coordinate and complete all permitting as specified herein.

K. Provide all required record drawings and other record documents.

L. All other required work whether implied or incidental to the proper completion of the project.

**1.04 CONTRACT TIME**

A. Contract times as specified in the Bid form and Agreement are as follows:

1. Substantial Completion = 270 calendar days from Notice to Proceed.
2. Final Completion = 30 calendar days from Date of Substantial Completion.

**1.05 ALLOWANCES**

A. The CONTRACTOR shall include in the Bid, the Lump Sum allowances itemized below to establish a fund which shall be used only by the CONTRACTOR with the specific approval of the ENGINEER to pay the cost of items not called for in these Specifications which cannot be anticipated at the time of Bidding. Payment for items of allowance shall be made in accordance with Article 11 of the General Conditions. Any unused balance of allowance shall revert to the OWNER upon completion of the Work.

| BID ITEM | DESCRIPTION | AMOUNT |
|---|---|---|
| 4. | Miscellaneous Work Allowance | $50,000.00 |
| | TOTAL | $50,000.00 |

B. Additional contract time for providing miscellaneous work shall be as requested by CONTRACTOR and as approved by OWNER and ENGINEER.

**1.06 PERMITS**

A. The OWNER has obtained permits for the design and construction of these facilities from the following agencies:

1. None required.

B. Pursuant to the Public Bid Disclosure Act, the permits and fees which the CONTRACTOR must apply for, obtain and pay prior to or during this project are as follows:

1. Palm Springs Building Permit (Main WTP).

2. Register with Palm Springs Building Department, fees waived.

3. The CONTRACTOR shall verify all requirements, obtain and pay for all permits required for the demolition and disposal work required by this project.

4. Other permits may also be required for the Work from local, County, State or Federal authorities.

5. All associated permit fees (where not waived) shall be paid by the CONTRACTOR. Permit fees shall be reimbursed by payment through the Contract Miscellaneous Work Allowance.

6. ENGINEER shall furnish all required signed/sealed drawings necessary for permit submittals at the CONTRACTOR's request.

**1.07 SPECIAL PROJECT CONSIDERATIONS**

A. Work associated with this project must not adversely impact operation of Village water treatment plants or services to the Village of Palm Springs' residents. As a result, CONTRACTOR must coordinate the work to meet the following conditions:

1. Keep project area(s) clean, neat and clear of debris.

2. Maintain access for vehicles and staff throughout plant sites.

3. Facility is an active water treatment plant site. As a result, the following conditions must be met:

a. Minimum treatment capacity shall be maintained as follows:

Main WTP = 4.0 MGD

b. Minimum high service pumping operation shall be maintained as follows:

Main WTP = 4 of 5 pumps

4. Existing SCADA system computers shall remain in service and functional until new systems have been commissioned and are operational.

5. In the event the work requires a short term system shutdown, notification and a review meeting shall be scheduled with OWNER and ENGINEER a minimum of three (3) days in advance.

**1.08 ALTERNATE ITEMS**

A. The OWNER may require the following alternate items in the event they become necessary for the successful completion of this project:

1. None.

B. Alternate item(s) shall not be included or utilized in the bid evaluation process. If alternates are to be accepted, they will be added prior to the recommendation of award based on available funding at the time.

**PART 2 PRODUCTS** - Not Used.

**PART 3 EXECUTION -** Not Used.

END OF SECTION

**SECTION 01050**

**FIELD ENGINEERING**

## PART 1 GENERAL

### 1.01 WORK INCLUDED

A. This section covers all work required for the verification of preconstruction conditions, layout of proposed utility improvements, quality control and data gathering for the preparation of post-construction record drawings.

### 1.02 RELATED WORK SPECIFIED ELSEWHERE

A. Section 01300 - Submittals.

B. Section 01720 - Project Record Documents.

### 1.03 SUBMITTALS

A. Submit name, address and telephone number of Florida Registered Land Surveyor before starting work.

B. Submit copies of all post-construction record drawings and certificate signed by the approved Florida Registered Land Surveyor indicating that the elevations and locations of the work are as the work was constructed.

### 1.04 DEFINITIONS

A. Location: "As-Built" location (northing, easting coordinate) relative to plant site grid as indicated on Drawings.

B. Elevation: "As-Built" elevation relative to the North American Vertical Datum of 1988 (NAVD 88) and bench marks as indicated on drawings. The NAVD 88 datum is used unless noted otherwise in drawings.

C. Major Deflection: Change in horizontal or vertical alignment greater than 12-inches accomplished without the use of fittings.

D. Valve Elevation: "As-Built" elevation of valve operating nut.

### 1.05 QUALITY ASSURANCE

A. Land surveyor employed shall be registered in the State of Florida and acceptable to Engineer.

B. Where applicable, employ a professional engineer of the discipline required per specifications or for specific purpose on project, licensed in the State of Florida.

### 1.06 PROJECT RECORD DOCUMENTS DATA

A. Maintain a complete and accurate log of control and survey data for project record documents as project progresses.

B. Upon completion of the project or other intervals as requested by ENGINEER, submit certified "as-built" site survey data of the project improvements. Scale shall be same as ENGINEER's drawings and ENGINEER's drawings may be used as a base for surveyor's field data (redline markups).

C. The following data shall be provided as a minimum:

1. Locations of all new structures.

2. Provide "As-Built" information of all pertinent elevations and coordinates as shown on the Drawings.

3. Locations and elevations of all new yard piping fittings and valves greater than 3 inches in diameter.

4. Provide locations and general elevation of new yard piping less than 3 inches in diameter.

5. Location and elevation of all connections to existing systems.

6. Locations and elevations of all other site improvements, as applicable, such as but not limited to sidewalks, curbs and roadways.

7. Locations and elevations of re-established survey control points.

D. Submit final record drawings prior to final pay application at completion of project as specified in Section 01700 - Contract Closeout.

E. Record Drawings shall be prepared and submitted as specified in Section 01720 - Project Record Documents.

**PART 2 PRODUCTS**

**NOT USED**

**PART 3 EXECUTION**

**3.01 EXAMINATION**

A. Verify locations of survey control points and bench marks prior to starting work. Promptly notify ENGINEER of any discrepancies discovered.

**3.02 SURVEY REFERENCE POINTS**

A. Protect survey control points prior to starting site work; preserve permanent reference points during construction. Make no changes without prior written notice to ENGINEER.

B. Promptly report to ENGINEER the loss or destruction of any reference point or relocation required because of changes in grades or other reasons. Replace dislocated survey control points based on original survey control.

C. Provide affidavit from approved Florida Registered Surveyor that all survey control points were re-established following completion of construction.

**3.03 SURVEY REQUIREMENTS**

A. ENGINEER will furnish CONTRACTOR with horizontal and vertical control information. Responsibility for construction of the Work to correct dimensions, alignment and grade shall be CONTRACTOR's. Additional control points, as applicable, shall be provided for and established by CONTRACTOR's surveyor.

B. Establish locations and elevations of proposed improvements. Locate and lay out by instrumentation and similar appropriate means:

1. All utility improvements including locations and elevations.

2. Site improvements including: stakes for grading, fill and pavement.
3. Structure foundations, column locations and structure elevations.
4. Controlling lines and elevations as required for mechanical and electrical improvements.

C. Periodically verify layouts by same means indicated above.

D. In the event that pipe or other mechanical feature cannot be left exposed for surveyor to obtain "as-built" information, CONTRACTOR shall place PVC pipe at all major changes in horizontal or vertical alignment and at all locations required that will be buried. PVC pipe shall be of a diameter suitable for the insertion of a surveyor's rod and shall extend from finish grade to the top center of pipe, fitting, location, etc.

E. PVC pipe for survey data shall be removed by CONTRACTOR after survey data has been obtained.

**3.04 SURVEYS FOR MEASUREMENT AND PAYMENT**

A. Final project record drawings with "as-built" information of the installed utility systems components and structures of completed project shall be submitted and approved by ENGINEER prior to application for final payment.

B. Current Aas-built@ information shall be available for ENGINEER=s use for evaluation of partial pay requests.

Should ENGINEER find that the record drawings are incomplete at the time of partial pay request, then ENGINEER=s recommendation of payment may be withheld until record drawing deficiencies are corrected.

END OF SECTION

**SECTION 01200**

**PROJECT MEETINGS**

## PART 1 GENERAL

### 1.01 WORK INCLUDED

A. The ENGINEER shall schedule and administer pre-construction meeting, periodic progress meetings, and specially called meetings throughout the progress of the work. ENGINEER shall also:

1. Prepare agenda for meetings.
2. Make physical arrangement for meetings.
3. Preside at meetings.
4. Prepare and distribute minutes of the meetings.

B. Representatives of contractors, subcontractors and suppliers attending meetings shall be qualified and authorized to act on behalf of the entity each represents.

C. The CONTRACTOR shall attend meetings to ascertain that work is expedited consistent with Contract Documents and construction schedules.

### 1.02 RELATED WORK SPECIFIED ELSEWHERE

A. Section 00100 - Instructions to Bidders.

B. Section 01300 - Submittals.

C. Section 01720 - Project Record Documents.

### 1.03 PRECONSTRUCTION CONFERENCE

A. Schedule a preconstruction meeting no later than 20 days after date of Notice to Proceed.

B. Location: A central site, convenient for all parties, designated by the ENGINEER.

C. Attendance:
1. OWNER's Representative.
2. ENGINEER and his Professional Consultants.
3. Resident Project Representative.
4. CONTRACTOR's Superintendent.
5. Major subcontractors.
6. Major suppliers.
7. Utilities.
8. Others as appropriate.

D. Suggested Agenda:
1. Distribution and discussion of:
    a. List of major subcontractors and suppliers.
    b. Projected Construction Schedules.
2. Critical work sequencing.
3. Major equipment deliveries and priorities.
4. Project Coordination.
    a. Designation of responsible personnel.

5. Procedures and processing of:
    a. Field orders.
    b. Requests for Information (RFI).
    c. Requests for Proposal (RFP).
    d. Submittals.
    e. Change Orders.
    f. Applications for Payment.
6. Adequacy of distribution of Contract Documents.
7. Procedures for maintaining Record Documents.
8. Use of premises:
    a. Office, work and storage areas.
    b. OWNER's requirements.
9. Construction facilities, controls and construction aids.
10. Temporary utilities.
11. Housekeeping procedures.
12. Check of required Bond and Insurance certifications.
13. Liquidated damages.
14. Request for a weekly job meeting for all involved.
15. Laboratory testing of material requirements.
16. Inventory of material stored on site provision.
17. Other Items as applicable.

**1.04 PROGRESS MEETINGS**

A. ENGINEER will schedule and administer Project meetings throughout progress of the Work at maximum monthly intervals, specially called meetings and pre-installation conferences.

B. ENGINEER will make physical arrangements for meetings, prepare agenda with copies for participants, preside at meetings, record minutes, and distribute copies within two days to ENGINEER, participants, and those affected by decisions made at meetings.

C. Location: Project field office of CONTRACTOR or ENGINEER or a central site convenient to all parties.

D. Attendance:
    1. ENGINEER, and his professional consultants as needed.
    2. Subcontractors as appropriate to the agenda.
    3. Suppliers as appropriate to the agenda.
    4. Others as appropriate.

E. Suggested Agenda:
    1. Review, approval of minutes of previous meeting.
    2. Review of work progress since previous meeting.
    3. Field observations, problems, conflicts.
    4. Problems which impede Construction Schedule.
    5. Review of off-site fabrication, delivery schedules.
    6. Corrective measures and procedures to regain projected schedule.
    7. Revisions to Construction Schedule.
    8. Progress, schedule, during succeeding work period.
    9. Coordination of schedules.
    10. Review submittal schedules; expedite as required.
    11. Maintenance of quality standards.
    12. Pending changes and substitutions.
    13. Review proposed changes for:
        a. Effect on Construction Schedule and on completion date.
        b. Effect on other contracts of the Project.
    14. Other business.

15. Construction schedule.
16. Critical/long lead items.

F. The CONTRACTOR is to attend progress meetings and is to study previous meeting minutes and current agenda items, in order to be prepared to discuss pertinent topics such as deliveries of materials and equipment, progress of the work, etc.

G. The CONTRACTOR is to provide a current submittal log at each progress meeting in accordance with Section 01300 - Submittals.

**1.05 PRE-INSTALLATION CONFERENCES**

A. When required in individual specification Section, a pre-installation conference will be arranged prior to commencing work of the Section.

B. Require attendance of entities directly affecting, or affected by, work of the Section.

C. Review conditions of installation, preparation and installation procedures, and coordination with related work.

**PART 2 PRODUCTS**

Not Used.

**PART 3 EXECUTION**

Not Used.

END OF SECTION

**SECTION 01300**

**SUBMITTALS**

## PART 1 GENERAL

### 1.01 WORK INCLUDED

A. Prepare and submit construction progress schedules, proposed products list, shop drawings, product data, samples, manufacturers' instructions, and manufacturers' certificates, complete and in accordance with the Contract Documents.

### 1.02 RELATED WORK SPECIFIED ELSEWHERE

A. Section 00705 - GENERAL CONDITIONS.

B. Section 00815 - Supplementary Conditions.

C. Section 01700 - Contract Closeout.

D. Section 01720 - Project Record Documents.

E. Individual Specification Sections: Additional specific requirements for submitted data.

### 1.03 SUBMITTAL PROCEDURES

A. Transmit each submittal with ENGINEER accepted form. Electronic submittals (via email) are preferred.

B. Sequentially number the transmittal forms. Resubmittals to have original number with an alphabetic suffix.

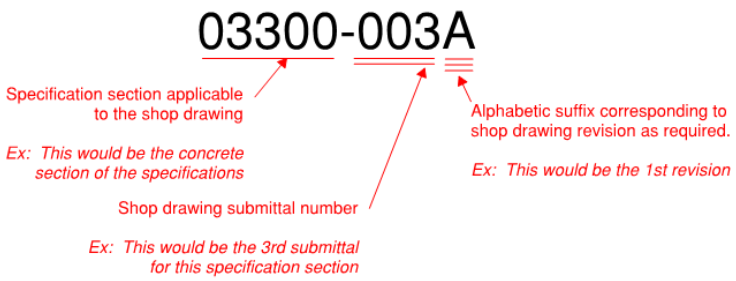


C. Identify Project, CONTRACTOR, Subcontractor or supplier; pertinent Drawing sheet and detail number(s), and specification Section number, as appropriate.

D. Drawings and schedules shall be checked and coordinated with the work of all trades involved, before they are submitted for review by the ENGINEER and shall bear the CONTRACTOR's stamp of approval as evidence of such checking and coordination. Drawings or schedules submitted without this stamp of approval shall be returned to the CONTRACTOR for resubmission.

E. Schedule submittals to expedite the Project, and deliver to ENGINEER at Eckler Engineering, Inc., 4700 Riverside Drive, Suite 110, Coral Springs, Florida 33067 and allow 20 days for review. Electronic

submittals shall be emailed to Eckler Engineering=s project manager for review.

F. If submittal documents/shop drawings show variations from Contract requirements because of standard shop practice or for other reasons, describe such variations in the letter of transmittal. If acceptable, proper adjustment in the Contract shall be implemented where appropriate. Failure to describe such variations does not relieve the CONTRACTOR of the responsibility for executing the work in accordance with the Contract, even though such drawings have been reviewed.

G. Each Shop Drawing shall have a blank area 3-1/2 inches by 3-1/2 inches, located adjacent to the title block. The title block shall display the following:
1. Number and title of the drawing.
2. Date of drawing or revision.
3. Name of project building or facility.
4. Name of contractor and subcontractor submitting drawing.
5. Clear identification of contents and location of the work.
6. Specification title and number.
7. Specification Section.
8. Applicable Drawing Number.

H. Revise and resubmit submittals as required; identify all changes made since previous submittal.

I. Distribute copies of reviewed submittals to concerned parties. Instruct parties to promptly report any inability to comply with provisions.

J. Requirements in this Section are in addition to any specific requirements for submittals specified in other Divisions and Sections of these Contract Documents.

**1.04 CONSTRUCTION PROGRESS SCHEDULES**

A. Submit initial progress schedule in triplicate within 15 days after date established in the Notice to Proceed for ENGINEER review.

B. Revise and resubmit as required.

C. Submit revised schedules with each Application for Payment, identifying changes since previous version.

D. Submit computer generated network analysis diagram using the critical path method, generally as outlined in Associated General Contractors of America (AGC) publication "The Use of CPM in Construction - A Manual for General Contractors and the Construction Industry".

E. Show complete sequence of construction by activity, identifying Work of separate stages and other logically grouped activities. Indicate the early and late start, early and late finish, float dates, and duration.

F. Indicate estimated percentage of completion for each item of Work at each submission.

G. Indicate submittal dates required for shop drawings, product data, samples, and product delivery dates, including those furnished by the OWNER and under Allowances.

**1.05 PROPOSED PRODUCTS LIST**

A. Within 30 days after date established in the Notice to Proceed, submit a complete list of major products proposed for use, with name of manufacturer, trade name, and model number of each product.

B. For products specified only by reference standards, give manufacturer, trade name, model or catalog designation, and reference standards.

**1.06 SHOP DRAWINGS**

A. Submit the number of copies which CONTRACTOR requires, plus three copies, which will be retained by ENGINEER (maximum of eight).

B. After review, distribute in accordance with Article on Procedures above and for Record Documents described in Section 01720 - Project Record Documents.

C. When used in the Contract Documents, the term "Shop Drawings" shall be considered to mean, in addition to the definition in Section 00705 - GENERAL CONDITIONS, Contractor's drawings plans for material and equipment which become an integral part of the Project. These drawings shall be complete and detailed. Shop Drawings shall consist of fabrication, erection and setting drawings and schedule drawings, manufacturer's scale drawings, and wiring and control diagrams. Cuts, catalogs, pamphlets, descriptive literature, and performance and test data, shall be considered only as supportive to required Shop Drawings as defined above.

D. Data on materials and equipment include, without limitation, materials and equipment lists, catalog data sheets, cuts, performance curves, diagrams, materials of construction and similar descriptive material. Materials and equipment lists shall give, for each item thereon, the name and location of the supplier or manufacturer, trade name, catalog reference, size, finish and all other pertinent data.

E. For all mechanical and electrical equipment furnished, provide a list including the equipment name, address, telephone number of the manufacturer's representative and service company so that service and/or spare parts can be readily obtained.

F. All manufacturers or equipment suppliers who proposed to furnish equipment or products shall submit an installation list to the ENGINEER along with the required shop drawings. The installation list shall include at least five installations where identical equipment has been installed and has been in operation for a period of at least one (1) year.

G. **Only the ENGINEER will utilize the color "red" in marking Shop Drawing submittals.**

**1.07 PRODUCT DATA**

A. Submit the number of copies which the CONTRACTOR requires, plus four copies which will be retained by the ENGINEER (with a maximum of eight).

B. Mark each copy to identify applicable products, models, options, and other data. Supplement manufacturers' standard data to provide information unique to this Project.

C. After review, distribute in accordance with Article on Procedures above and provide copies for Record Documents described in Section 01720 - Project Record Documents.

**1.08 SAMPLES**

A. Submit samples to illustrate functional and aesthetic characteristics of the Product, with integral parts and attachment devices. Coordinate sample submittals for interfacing work.

B. Submit samples of finishes in custom colors selected, textures, and patterns for ENGINEER's selection.

C. Include identification on each sample, with full Project information.

D. Submit the number or samples specified in individual specification Sections; one of which will be retained by ENGINEER.

E. Samples not destroyed in testing shall be sent to the ENGINEER or stored at the site of the work. Accepted samples of the hardware in good condition will be marked for identification and may be used in the work. Materials and equipment incorporated in the work shall match the accepted samples. Samples which failed testing or are not accepted will be returned to the CONTRACTOR at his expense, if so requested at time of submission.

**1.09 MANUFACTURER'S INSTRUCTIONS**

A. When specified in individual specification Sections, submit manufacturers' printed instructions for delivery, storage, assembly, installation, start-up, adjusting, and finishing, in quantities specified for Product Data.

B. Identify conflicts between manufacturers' instructions and Contract Documents.

**1.10 MANUFACTURER'S CERTIFICATES**

A. When specified in individual specification Sections, submit manufacturers' certificate to ENGINEER for review, in quantities specified for Product Data.

B. Indicate material or Product conforms to or exceeds specified requirements. Submit supporting reference date, affidavits, and certifications as appropriate.

C. Certificates may be recent or previous test results on material or Product, but must be acceptable to ENGINEER.

**PART 2 PRODUCTS**

Not Used.

**PART 3 EXECUTION**

Not Used.

END OF SECTION

**SECTION 01400**

**QUALITY CONTROL**

## PART 1 GENERAL

### 1.01 WORK INCLUDED

A. This section covers the work as required to provide and/or coordinate:

1. Quality assurance and control of installation.

2. References.

3. Field samples.

4. Inspection and testing laboratory services.

5. Manufacturers' field services and reports.

### 1.02 RELATED WORK SPECIFIED ELSEWHERE

A. Section 01300 - Submittals

### 1.03 REFERENCES

A. Conform to reference standards by date of current issue on date for receiving bids.

B. Should specified reference standards conflict with Contract Documents, request clarification from ENGINEER before proceeding.

C. The contractual relationship of the parties to the Contract shall not be altered from the Contract Documents by mention or inference otherwise in any reference document.

### 1.04 QUALITY ASSURANCE/CONTROL OF INSTALLATION

A. Monitor quality control over suppliers, manufacturers, products, services, site conditions, and workmanship, to produce Work of specified quality.

B. Comply fully with manufacturers' instructions, including each step in sequence.

C. Should manufacturers' instructions conflict with Contract Documents, request clarification from ENGINEER before proceeding.

D. Comply with specified standards as a minimum quality for the Work except when more stringent tolerances, codes, or specified requirements indicate higher standards or more precise workmanship.

E. Perform work by persons qualified to produce workmanship of specified quality.

F. Secure Products in place with positive anchorage devices designed and sized to withstand stresses, vibration, physical distortion or disfigurement.

**1.05 FIELD SAMPLES**

A. Install field samples at the site as required by individual specification Sections for review.

B. Acceptable samples represent a quality level for the Work.

C. Where field sample is specified in individual Sections to be removed, clear area after field sample has been accepted by ENGINEER.

**1.06 INSPECTION AND TESTING LABORATORY SERVICES**

A. OWNER will appoint, employ, and pay for services of an independent firm to perform inspection and testing of earthwork, concrete, road base, and asphalt.

B. The independent firm will perform inspections, tests, and other services specified in individual specification Sections and as required by the ENGINEER.

C. Reports will be submitted by the independent firm to the ENGINEER indicating observations and results of tests and indicating compliance or non-compliance with Contract Documents. Number of signed/sealed reports required shall be established at preconstruction meeting.

D. Cooperate with independent firm; furnish samples of materials, design mix, equipment, tools, storage and assistance as requested.
   1. Notify ENGINEER and independent firm 24 hours prior to expected time for operations requiring services.
   2. Make arrangements with independent firm and pay for additional samples and tests required for CONTRACTOR's use.

E. Retesting required because of non-conformance to specified requirements shall be performed by the same independent firm on instructions by the ENGINEER. Payment for retesting will be charged to the CONTRACTOR by deducting inspection or testing charges from the Contract Sum/Price.

**1.07 MANUFACTURERS' FIELD SERVICES AND REPORTS**

A. Submit qualifications of manufacturer’s representative to ENGINEER 30 days in advance of required observations. Manufacturer’s representative subject to acceptance of ENGINEER.

B. When specified in individual specification Sections, require material or Product suppliers or manufacturers to provide qualified staff personnel to observe site conditions, conditions of surfaces and installation, quality of workmanship, start-up of equipment, test, adjust, and balance of equipment and place equipment into operation as applicable, and to initiate instructions when necessary.

C. Individuals to report observations and site decisions or instructions given to applicators or installers that are supplemental or contrary to manufacturers' written instructions.

D. Submit report in triplicate within 30 days of observation to ENGINEER for review.

**PART 2 PRODUCTS**

Not Used.

**PART 3 EXECUTION**

Not Used.

END OF SECTION

**SECTION 01500**

**CONSTRUCTION FACILITIES AND TEMPORARY CONTROLS**

## PART 1 GENERAL

### 1.01 WORK INCLUDED

A. Temporary Utilities: Electricity, lighting, heat, ventilation, telephone service, water, and sanitary facilities.

B. Temporary Controls: Enclosures and fencing, protection of the Work, road closings, traffic control, temporary bypass sanitary pumping, confined space entry requirements, stormwater management (NPDES), and water control.

C. Construction Facilities: Access roads, parking, progress cleaning, and temporary buildings.

D. Some of the items specified herein are not specifically required for the project. However, these items may be provided as required for the convenience of the CONTRACTOR or as required for proper completion of the Work.

### 1.02 RELATED WORK SPECIFIED ELSEWHERE

A. Section 02500 - Restoration and Cleanup.

### 1.03 TEMPORARY ELECTRICITY

A. Existing facility electrical power service can be used for construction trailers, storage areas and general construction purposes. CONTRACTOR may use the existing and upgraded electrical services.

B. Existing permanent convenience receptacles may be utilized during construction for small power tools and lighting local to Work.

C. CONTRACTOR will not be charged for electrical service used.

D. Provide connections to existing facilities, sized to provide service required for power and lighting, as required.

E. Provide properly configured NEMA polarized outlets to prevent insertion of 110-120 volt plugs into higher voltage outlets. For connection of power tools and equipment, provide outlets equipped with ground-fault circuit interrupters, reset button and pilot light, as required.

F. Provide grounded extension cords. Use "hard-service" cords where exposed to abrasion and traffic. Provide waterproof connectors to connect separate lengths of electric cords if more than one length is required.

G. Provide general service lighting as required for adequate illumination. Provide guard cages or tempered glass bulb/fixture

enclosures, where exposed to breakage. Provide exterior rated fixtures where exposed to moisture.

**1.04 TEMPORARY LIGHTING (AS APPLICABLE)**

A. Provide and maintain 1 watt/sq ft lighting to exterior staging and storage areas after dark for security purposes.

B. Maintain lighting and provide routine repairs.

**1.05 TEMPORARY VENTILATION**

A. Ventilate enclosed areas to assist cure of materials, to dissipate humidity, and to prevent accumulation of dust, fumes, vapors, or gases.

**1.06 CONFINED SPACE ENTRY REQUIREMENTS**

A. CONTRACTOR shall obtain all entry permits and provide all equipment and procedures as required to meet confined space entry requirements in accordance with the following legal authorities:

1. Occupational Safety and Health Act (OSHA), Title 29 CFR 1910.146 "Permit Required Confined Spaces".

2. Florida Statute - Chapter 38 T-20 Section .035. "Hazardous Atmospheres in Confined Spaces".

**1.07 TEMPORARY WATER SERVICE (AS APPLICABLE)**

A. Provide and maintain suitable quality water service, as required, for construction operations.

B. All water used must be metered by OWNER, but CONTRACTOR will not be charged for the metered water use.

C. Extend branch piping with outlets located so water is available by hoses with threaded connections.

D. Make arrangements with OWNER for obtaining meter.

E. Provide reduced pressure principle backflow preventer, Watts Series 909, or equal, for all temporary water services.

**1.08 TEMPORARY SANITARY FACILITIES**

A. Provide self-contained, single-occupant toilet units of the chemical, aerated recirculation, or combustion type, properly vented and fully enclosed in a fiberglass or other approved non-absorbent shell.

**1.09 TEMPORARY CONSTRUCTION FENCING**

A. Construction Fence: Commercial grade chain link fence or bright orange-colored, high density, polyethylene safety fence. Minimum fence height shall be 4 feet.

B. Provide construction fence to secure entire construction area at all times when CONTRACTOR's personnel are not present.

C. Gates shall be provided with padlocks.

**1.10 CONTRACTOR'S FIELD OFFICES AND STORAGE TRAILERS/CONTAINERS**

A. Office: Weather-tight, with lighting, electrical outlets, heating, cooling and ventilating equipment, sanitation facilities, and equipped with sturdy furniture.

B. Provide space for project meetings with table and chairs to accommodate 8 persons.

C. Provide private space (lockable room), desk, chair, and filing cabinet for ENGINEER'S USE.

D. Locate offices and sheds a minimum distance of 30 feet from new structures and proposed underground construction.

E. Recommended location for CONTRACTOR’s office trailer and storage facilities shall be indicated on drawings.

**1.11 PROTECTION OF INSTALLED WORK**

A. Protect installed Work and provide special protection where specified in individual specification Sections.

B. Provide temporary and removable protection for installed Products. Control activity in immediate work area to minimize damage.

C. Prohibit traffic from landscaped areas.

**1.12 PARKING**

A. Temporary parking areas for CONTRACTOR’s and ENGINEER’s project personnel shall be indicated on Drawings.

**1.13 PROJECT IDENTIFICATION (WHEN INDICATED ON DRAWINGS)**

A. Provide minimum 6'-6"w x 5'-0"h project sign of exterior grade plywood and wood frame construction, painted, with exhibit lettering by a professional sign painter to ENGINEER's design and colors. Sign shall withstand weathering, fading, and chipping for the duration of construction. General design as required for the project sign shall be as shown on the Drawings.

B. List title of Project, names of OWNER, ENGINEER, professional sub-consultants and CONTRACTOR.

C. Erect on site at location established by OWNER and ENGINEER.

D. No other signs are allowed without OWNER permission except those required by applicable law.

E. Submit sketch of project sign in accordance with Section 01300 - Submittals.

## 1.14 FIRE EXTINGUISHERS

A. Provide portable UL-rated, Class A fire extinguishers for temporary offices and similar spaces. In other locations, provide portable UL-rated Class ABC dry chemical extinguishers or a combination of NFPA recommended Classes for the exposure. Comply with NFPA 10 and 241 for classification, extinguishing agent and size required by location and class of fire exposure.

## 1.15 PROTECTION OF EXISTING STRUCTURES

A. CONTRACTOR shall provide screens or other such means to prevent splatter of concrete, paint or other such substance from staining or damaging the nearby existing structures, equipment or vehicles.

B. CONTRACTOR shall be responsible for cleaning and repairing all damages caused by overspray.

## 1.16 FUEL STORAGE

A. All fuel or other such regulated substances stored on site by CONTRACTOR shall be done so in accordance with the rules and regulations of the Palm Beach County Department of Environmental Resources Management.

## 1.17 PROGRESS CLEANING

A. Maintain areas free of waste materials, debris, and rubbish. Maintain sites in a clean and orderly condition.

B. Broom and vacuum clean interior areas prior to start of surface finishing and continue cleaning to eliminate dust.

C. Remove waste materials, debris, and rubbish from sites weekly and dispose of at an approved site.

## 1.18 REMOVAL OF TEMPORARY UTILITIES, FACILITIES, AND CONTROLS

A. Remove temporary above grade or buried utilities, equipment, facilities, materials, prior to Final Inspection.

B. Clean and repair damage caused by installation or use of temporary work.

C. Restore existing facilities used during construction to original condition. Restore permanent facilities used during construction to specified condition.

## 1.19 CONSTRUCTION DEBRIS DISPOSAL

A. Dumpster and/or roll-off container service shall be provided by CONTRACTOR.

B. Other lawful debris haul-off (dump trucks) by CONTRACTOR.

**PART 2 PRODUCTS**

Not Used.

**PART 3 EXECUTION**

Not Used.

END OF SECTION

**SECTION 01505**

**MOBILIZATION/DEMOBILIZATION**

## PART 1 GENERAL

### 1.01 WORK INCLUDED

A. Mobilization shall include obtaining of all permits, insurance, and bonds; moving onto site of equipment; temporary buildings, and other construction facilities; all as required for proper performance and completion of the Work. Mobilization shall include but not be limited to the following principal items:

1. Moving onto site of CONTRACTOR's labor and equipment required for first month's operation.

2. Providing field office trailers with all specified furnishings and utility services and appurtenances, if required by specifications.

3. Providing on-site sanitary facilities, potable water facilities and electrical service, as specified.

4. Submittal of all required insurance certificates, bonds and work progress schedules.

5. Obtaining all required permits.

6. Posting all OSHA required notices and establishment of safety programs.

7. Have CONTRACTOR's superintendent at job site full time.

8. Project identification sign (When required by the Drawings).

B. Demobilization shall include but not be limited to the following principle items:

1. Removal of all temporary construction facilities.

2. Removal of all equipment and excess materials.

3. Cleanup and restoration of the site to conditions existing prior to construction.

### 1.02 PAYMENT FOR MOBILIZATION/DEMOBILIZATION

A. CONTRACTOR's attention is directed to the condition that no payment for mobilization/demobilization, or any part thereof, will be recommended for payment under the Contract until all Mobilization/Demobilization items listed above have been completed as specified.

B. As soon as practicable after receipt of Notice to Proceed, CONTRACTOR shall submit a breakdown to ENGINEER for review, which shall show estimated value of each major component of mobilization/demobilization. When reviewed by ENGINEER, breakdown will be basis for initial progress payments in which Mobilization is included.

C. It shall be understood that the Mobilization/Demobilization item on Lump Sum Base Bid Breakdown includes a sum paid by OWNER to CONTRACTOR in recognition of CONTRACTOR's indemnification obligations. CONTRACTOR shall acknowledge payment of such consideration by letter to OWNER.

**PART 2 PRODUCTS**

Not Used.

**PART 3 EXECUTION**

Not Used.

END OF SECTION

**SECTION 01700**

**CONTRACT CLOSEOUT**

## PART 1 GENERAL

### 1.01 WORK INCLUDED

A. This section covers the work as related to contract closeout procedures, final inspection, CONTRACTOR's closeout submittals and final application for payment.

### 1.02 RELATED WORK SPECIFIED ELSEWHERE

A. Section 01720 - Project Record Documents.

B. Individual Sections - Testing and Closeout Requirements.

### 1.03 SUBSTANTIAL COMPLETION

A. When CONTRACTOR considers the Work is substantially complete, he shall submit to the ENGINEER:
   1. A written notice that the Work, or designated portion thereof, is substantially complete.
   2. A list of items to be completed or corrected.

B. Within a reasonable time after receipt of such notice, the ENGINEER will make an inspection to determine the status of completion.

C. Should the ENGINEER determine that the Work is not substantially complete:
   1. The ENGINEER will promptly notify the CONTRACTOR in writing, giving the reasons therefor.
   2. CONTRACTOR shall remedy the deficiencies in the Work, and send a second written notice of substantial completion to the ENGINEER.
   3. The ENGINEER will reinspect the Work.

D. When the ENGINEER finds that the Work is substantially complete, he will:
   1. Prepare and deliver to OWNER a tentative Certificate of Substantial Completion on NSPE Form 1910-8-D, with a tentative list of items to be completed or corrected before final payment.
   2. After consideration of any objections made by the OWNER as provided in GENERAL CONDITIONS, and when the ENGINEER considers the Work substantially complete, he will execute and deliver to the OWNER and the CONTRACTOR a definite Certificate of Substantial Completion with a revised tentative list of items to be completed or corrected.

### 1.04 FINAL COMPLETION

A. When CONTRACTOR considers the Work is complete, he shall submit written certification that:
   1. Contract Documents have been reviewed.
   2. Work has been inspected for compliance with Contract Documents.
   3. Work has been completed in accordance with Contract Documents.
   4. Equipment and systems have been tested in the presence of the OWNER's representative and are operational.

5. Work is completed and ready for final inspection.

B. The ENGINEER will make an inspection to verify the status of completion with reasonable promptness after receipt of such certification.

C. Should the ENGINEER consider that the Work is incomplete or defective:
   1. The ENGINEER will promptly notify the CONTRACTOR in writing, listing the incomplete or defective work.
   2. CONTRACTOR shall take immediate steps to remedy the stated deficiencies, and send a second written certification to the ENGINEER that the Work is complete.
   3. The ENGINEER will reinspect the Work.

D. When the ENGINEER finds that the Work is acceptable under the Contract Documents, he shall request the CONTRACTOR to make final closeout submittals.

**1.05 REINSPECTION FEES**

A. Should the ENGINEER perform reinspections due to failure of the Work to comply with the claims of status of completion made by the CONTRACTOR:
   1. OWNER will deduct the amount of such compensation from the final payment to the CONTRACTOR.

**1.06 CONTRACTOR'S CLOSEOUT SUBMITTALS TO ENGINEER**

A. Evidence of Payment and Release of Liens: To requirements of GENERAL and SUPPLEMENTARY CONDITIONS.

B. Certificate of Insurance for Products and Completed Operations.

C. Consent of Surety for Final Payment.

**1.07 FINAL ADJUSTMENT OF ACCOUNTS**

A. Submit a final statement of accounting to the ENGINEER.

B. Statement shall reflect all adjustments to the contract Sum:
   1. The original Contract Sum.
   2. Additions and deductions resulting from:
      a. Previous Change Orders.
      b. Allowances.
      c. Unit Prices.
      d. Deductions for uncorrected Work.
      e. Penalties and Bonuses.
      f. Deductions for liquidated damages.
      g. Deductions for reinspection payments.
      h. Other adjustments.
   3. Total Contract Sum, as adjusted.
   4. Previous payments.
   5. Sum remaining due.

C. ENGINEER will prepare a final Change Order, reflecting recommended adjustments to the Contract Sum which were not previously made by Change Order(s).

**1.08 FINAL APPLICATION FOR PAYMENT**

A. ENGINEER shall send written request directing CONTRACTOR to make final application for payment once the following conditions have been met:

1. All work per contract has been satisfactorily completed.

2. All contract closeout deliverables have been submitted by CONTRACTOR and approved by ENGINEER.

3. The requirements of all permits obtained by OWNER and CONTRACTOR have been satisfied.

4. All closeout submittals per Article 1.06 above have been delivered to ENGINEER.

5. Final contract change order has been approved.

B. CONTRACTOR shall submit the final Application for Payment in accordance with procedures and requirements stated in the Conditions of the Contract.

**PART 2 PRODUCTS**

Not Used.

**PART 3 EXECUTION**

Not Used.

END OF SECTION

**SECTION 01720**

**PROJECT RECORD DOCUMENTS**

## PART 1 GENERAL

### 1.01 WORK INCLUDED

A. Collect, maintain, and provide the required record documents and samples for the project, including record drawings, and construction photographs.

### 1.02 RELATED WORK SPECIFIED ELSEWHERE

A. Section 00705 - GENERAL CONDITIONS

B. Section 00815 - Supplementary Conditions.

C. Section 01300 - Submittals.

D. Section 01700 - Contract Closeout

E. Individual Specification Sections: Manufacturer's certificates and certificates of inspections and samples.

### 1.03 SUBMITTALS

A. At Contract closeout, deliver Record Documents and samples under provisions of Section 01700 - Contract Closeout.

B. Submittal quantities shall be as follows:

1. Final Record Drawings - two (2) sets.
2. Construction photographs - two (2) sets with CD’s.
1. Preconstruction audio/video DVD - two (2) copies.

C. Submittals shall be made in accordance with the requirements of Section 01300 - Submittals.

### 1.04 DEFINITIONS

A. ZONE OF INFLUENCE: Area in which surface and/or underground facilities or features will be disturbed by progress of work.

### 1.05 MAINTENANCE OF DOCUMENTS AND SAMPLES

A. In addition to requirements in GENERAL CONDITIONS, maintain at the site for OWNER one record copy of:
1. Contract Drawings.
2. Specifications.
3. Addenda.
4. Change Orders and other modifications to the Contract.
5. ENGINEER's field orders or written instructions.
6. Reviewed shop drawings, product data, and samples.
7. Field test records.
8. Inspection certificates.
9. Manufacturer's certificates.
10. Construction photographs.

B. Store Record Documents and samples apart from documents used for construction. Provide organized, dry, secure storage for Record Documents.

C. Label Record Documents and samples in accordance with Section number listings in Table of Contents of this Project Manual. Label each document "PROJECT RECORD" in neat, large, printed letters.

D. Maintain Record Documents in a clean, dry and legible condition. Do not use Record Documents for construction purposes.

E. Keep Record Documents and samples available for inspection by ENGINEER.

**1.06 RECORDING (RECORD DATA)**

A. Record information on a set of blackline drawings and in a copy of the Contract Documents (Specifications) Book provided by ENGINEER.

B. Provide color marking pens for recording information. Color coding system used shall be approved by ENGINEER. Recommended color coding system as follows:

Green = Deleted Item or Work
Red = Revised Item or Work
Blue = Notation or Clarification

C. Record information concurrently with construction progress. Do not conceal any work until required information is recorded.

D. Contract Drawings and Shop Drawings: Legibly mark each item to record actual construction, including:
1. Horizontal locations and vertical elevations of bridge and appurtenances, structure corners, paving corners and other site improvements per Section 01050 - Field Engineering.
2. Measured locations of internal utilities and appurtenances concealed in construction, referenced to visible and accessible features of construction.
3. Field changes of dimension and detail of all disciplines.
4. Changes made by Modifications of all disciplines.
5. Details not on original Contract Drawings of all disciplines.
6. References to related shop drawings and Modifications of all disciplines.
7. Show field location and relative elevation of all located existing underground facilities not shown on contract drawings.
8. Show field location and relative elevation confirming all located existing underground facilities shown on drawings.
9. Dimensional changes to drawings.
10. Revisions to details shown on drawings.
11. Depths of foundations.
12. Locations and depths of underground utilities.
13. Revisions to routing of piping and conduits.
14. Revisions to electrical circuitry.
15. Actual equipment locations.
16. Duct size and routing.
17. Locations of concealed internal utilities.
18. Changes made by Change Order or Construction Change Directive.
19. Details not on the original Contract Drawings.
20. Field records for variable and concealed conditions.

21. Record information on the Work that is shown only schematically.
22. In general, document all revisions/modifications to contract documents.

E. Specifications: Legibly mark each item to record actual construction, including:
1. Manufacturer, trade name, and catalog number of each product actually installed, paying particular attention to optional items and substitute items.
2. Changes made by Addenda and Modifications.

F. Other Documents: Maintain manufacturer's certifications, inspection certifications, and field test records, required by individual Specification sections.

**1.07 CONSTRUCTION PHOTOGRAPHS**

A. Provide photographs in color showing the preconstruction conditions, construction progress, and the post-construction conditions.

B. Photographs shall be taken by an experienced photographer.

C. The photographer shall be equipped to take interior/exterior photographs as directed by the ENGINEER.

D. Photographs shall be taken throughout the construction process and show excavations, piping details, construction which will ultimately be hidden from view and the final completion. Provide sufficient quantity of photographs to adequately detail construction.

E. Provide two (2) sets of construction photographs. These prints shall measure 3-1/2" x 5". All prints shall be mounted in plastic photographic binders. Also provide two (2) CD’s with all photos.

F. Identify each print with the date, orientation of view, and a description of the view.

G. Deliver CD’s and two sets of prints, all in three-ring binders and sequentially labeled to the ENGINEER upon completion of the project. Binders shall be labeled to indicate project name and number, contractor, owner, engineer and year of project.

**1.08 COLOR AUDIO-VISUAL PRECONSTRUCTION RECORD**

A. General

1. Prior to commencing work, CONTRACTOR shall have a continuous color audio-video DVD recording taken along entire length of Project to serve as a record of preconstruction conditions. No work shall begin prior to review and acceptance of video covering the work area(s) by ENGINEER. ENGINEER shall have authority to reject all or any portion of the video DVD not conforming to specifications and order that it be redone at no additional charge. CONTRACTOR shall reschedule unacceptable coverage within five days after being notified. ENGINEER shall designate those areas, if any, to be omitted from or added to audio-video coverage. DVD recordings shall not be made more than 90 days prior to work in any area. All DVD(s) and written records shall become property of OWNER.

2. CONTRACTOR shall engage services of a professional videographer. Color audio-video DVD(s) shall be prepared by a responsible commercial firm known to be skilled and regularly engaged in the business of preconstruction color audio-video documentation. Electrographer shall furnish to ENGINEER a list of all equipment to be used for audio-video recording, i.e. manufacturer's name, model number, specifications and other pertinent information. Additional information to be furnished by electrographer is the names and addresses of two references that electrographer has performed color audio-video recording for projects of a similar nature within the last 12 months.

B. Audio-Video DVD(s)

1. Audio-video DVD(s) shall be new. Reprocessed DVD(s) will not be acceptable. The DVD(s) shall be compatible for playback with a standard DVD player, -R or +R format.

C. Equipment

1. All equipment, accessories, materials and labor to perform this service shall be furnished by CONTRACTOR.

2. Total audio-video system shall reproduce bright, sharp, clear pictures with accurate colors and shall be free from distortion, or any other form of imperfection. The audio portion of recording shall reproduce commentary of camera operator with proper volume, clarity and be free from distortion and interruptions.

3. When conventional wheeled vehicles are used, distance from the camera lens to ground shall not be less than 12 feet. In some instances, audio-video coverage may be required in areas not accessible by conventional wheeled vehicles. Such coverage shall be obtained by walking or special conveyance acceptable to ENGINEER.

4. Color video camera used in the recording system shall have horizontal resolution of 300 lines at center, a luminance signal to noise ratio of 45 db ad a minimum illumination requirement of 25 foot-candles.

D. Recorded Information - Audio

1. Each DVD shall begin with current date, project name and municipality (or owner) and be followed by general location, i.e., name of street, house address, viewing side and direction of progress. Audio track shall consist of an original living recording. The recording shall contain the narrative commentary of electrographer, recorded simultaneously with his fixed elevation video record of zone of influence of construction.

E. Recorded Information - Video

1. All video recordings must, by electronic means, display continuously and simultaneously, generated with actual taping, transparent digital information to include the date and time of recording and station numbers as shown on the Drawings. The date

information shall contain the hours, minutes and seconds. Additional information shall be displayed periodically. Such information shall include nut not be limited to project name, contract umber, name of street, house address, direction of travel and the viewing side. This transparent information shall appear on the extreme upper left hand third of the screen.

2. All recording shall be done during times of good visibility. No recording shall be done during precipitation, mist or fog. The recording shall only be done when sufficient sunlight is present to properly illuminate the subjects of recording and to produce bright, sharp video recordings of those subjects.

3. The rate of speed in the general direction of travel of the vehicle used during recording shall not exceed 44 feet per minute. Panning, zoom-in and zoom-out rates shall be sufficiently controlled to maintain a clear view of the object.

4. Video coverage shall include all surface features located within the zone of influence of construction supported by appropriate audio coverage. Such coverage shall include, but not be limited to existing driveways, sidewalks, curbs, pavements, ditches, mailboxes, landscaping, culverts, fences, signs, structures, and headwalls within the area covered.

**PART 2 PRODUCTS**

Not Used.

**PART 3 EXECUTION**

Not Used.

END OF SECTION

**SECTION 01730**

**OPERATION AND MAINTENANCE DATA**

## PART 1 GENERAL

### 1.01 WORK INCLUDED

A. This section covers the work required to prepare and submit operation and maintenance manuals for the project, complete all in accordance with the Contract Documents.

B. Some of the items specified herein are not specifically required for the project. However, these items shall be provided as required for the proper completion of the Work.

### 1.02 RELATED WORK SPECIFIED ELSEWHERE

A. Section 01010 - Summary of Work.

B. Section 01740 - Warranties and Bonds.

### 1.03 SUBMITTALS

A. Submit two copies of preliminary draft or proposed formats and outlines of contents prior to substantial completion of Work. ENGINEER will review draft and return one copy with comments.

B. Submit two (2) copies of completed volumes in final form 15 days prior to final completion. Copy will be returned with ENGINEER comments. Revise content of documents as required prior to final submittal.

D. Submit four (4) copies of revised volumes of data in final form within ten days after final completion.

### 1.04 QUALITY ASSURANCE

A. Prepare instructions and data by personnel experienced in maintenance and operation of described products.

### 1.05 GENERAL FORMAT (EACH VOLUME)

A. Prepare data in the form of an instructional manual.

B. Binders: Commercial quality, 8-1/2 x 11 inch three-ring binders with hardback, cleanable, plastic covers; 3 inch maximum ring size. When multiple binders are used, correlate data into related consistent groupings.

C. Cover: Identify each binder with typed or printed title OPERATION AND MAINTENANCE INSTRUCTIONS; list title of Project; identify subject matter of contents.

D. Arrange content by process flow under section numbers and sequence of Table of Contents of this Project Manual.

E. Provide tabbed fly leaf for each separate product and system, with typed description of product and major component parts of equipment.

F. Text: Manufacturer's printed data, or typewritten data on 20 pound paper.

G. Drawings: Provide with reinforced punched binder tab. Bind in with text; fold larger drawings to size of text pages.

**1.06 OPERATION AND MAINTENANCE MANUALS (EACH VOLUME)**

A. Provide title of Project; owner's name; names, addresses, and telephone numbers of ENGINEER, subconsultants, and CONTRACTOR with name of responsible parties; schedule of products and systems, indexed to content of the volume.

B. Table of Contents: schedule of contents and systems, indexed to each volume.

C. For Each Product or System: List names, addresses and telephone numbers of Subcontractors and suppliers, including local source of supplies and replacement parts.

D. Product Data: Mark each sheet to clearly identify specific products and component parts, and data applicable to installation. Delete inapplicable information.

E. Drawings: Supplement product data to illustrate relations of component parts of equipment and systems, to show control and flow diagrams. Do not use Project Record Documents as maintenance drawings.

F. Type Text: As required to supplement product data. Provide logical sequence of instructions for each procedure, incorporating manufacturer's instructions.

**1.07 EQUIPMENT AND SYSTEMS DATA**

A. Each Item of Equipment and Each System: Include description of unit or system, and component parts. Identify function, normal operating characteristics, and limiting conditions. Include performance curves, with engineering data and tests, and complete nomenclature and commercial number of replaceable parts.

B. Panelboard Circuit Directories: Provide electrical service characteristics, controls and communications.

C. Operating Procedures: Include start-up, break-in, and routine normal operating instructions and sequences. Include regulation, control, stopping, shut-down, and emergency instructions. Include summer, winter, and any special operating instructions.

D. Maintenance Requirements: Include routine procedures and guide for trouble-shooting; disassembly, repair, and reassembly instructions; and alignment, adjusting, balancing, and checking instructions.

E. Provide servicing and lubrication schedule, and list of lubricants required.

F. Include manufacturer's printed operation and maintenance instructions.

G. Include sequence of operation by controls manufacturer.

H. Provide original manufacturer's parts list, illustrations, assembly drawings, and diagrams required for maintenance.

I. Provide control diagrams by controls manufacturer as installed. Include coded wiring as installed.

J. Provide CONTRACTOR's coordination drawings, with coded piping diagrams as installed.

K. Provide charts of valve tag numbers, with location and function of each valve, keyed to flow and control diagrams.

L. Provide list of original manufacturer's spare parts, current prices, and recommended quantities to be maintained in storage.

M. Additional Requirements: As specified in individual Product specification sections.

N. Provide a listing in Table of Contents for design data, with tabbed fly sheet and space for insertion of data.

**1.08 INSTRUCTION OF OWNER PERSONNEL**

A. Before final inspection, instruct OWNER's designated personnel in operation, adjustment, and maintenance of products, equipment, and systems, at agreed upon times.

B. Use operation and maintenance manuals as basis for instruction. Review contents of manual with personnel in detail to explain all aspects of operation and maintenance.

C. Prepare and insert additional data in Operation and Maintenance Manual when need for such data becomes apparent during instruction.

**PART 2 PRODUCTS**

Not Used.

**PART 3 EXECUTION**

Not Used.

END OF SECTION

**SECTION 01740**

**WARRANTIES AND BONDS**

## PART 1 GENERAL

### 1.01 WORK INCLUDED

A. This section covers the work required to prepare and submit all warranty and bond information required by these Contract Documents.

B. Warranties and bonds required shall be as specified in the individual specification sections and Section 00705 - GENERAL CONDITIONS.

### 1.02 RELATED WORK SPECIFIED ELSEWHERE

A. Section 00100 - Instructions to Bidders.

B. Section 00705 - General Conditions.

C. Section 01700 - Contract Closeout.

D. Individual Specification Sections: Warranties required for specific Products or Work.

### 1.03 FORMAT OF SUBMITTALS

A. Bind in commercial quality, 8-1/2 x 11 three-ring side binders with hardback, cleanable, plastic covers. Provide two copies of completed binders.

B. Label cover of each binder with typed or printed title WARRANTIES AND BONDS, with title of Project; date; project owner; name, address and telephone number of CONTRACTOR and ENGINEER.

C. Table of Contents: Neatly typed, in the sequence of the Table of Contents of these Specifications, with each item identified with the number and title of the specification section in which specified, and the name of the Product or work item.

D. Separate each warranty or bond with index tab sheets keyed to the Table of Contents listing. Provide full information, using separate typed sheets as necessary. List Subcontractor, supplier, and manufacturer, with name, address, and telephone number of responsible principal.

E. Provide dates of beginning and ending of warranty period, bond or service and maintenance contracts.

### 1.04 PREPARATION OF SUBMITTALS

A. Obtain warranties and bonds, executed in duplicate by responsible Subcontractors, suppliers, and manufacturers, within ten days after completion of the applicable item or work. Except for items put into use with Owner's permission, leave date of beginning of time of warranty blank until the Date of Substantial completion is determined.

B. Verify that documents are in proper form, contain full information, and are notarized.

C. Co-execute submittals when required.

D. Retain warranties and bonds until time specified for submittal.

**1.05 TIME OF SUBMITTALS**

A. For equipment or component parts of equipment put into service during construction with Owner's permission, submit documents within ten days after acceptance.

B. Make other submittals within ten days after Date of Substantial Completion, prior to final Application for Payment.

C. For items of Work when acceptance is delayed beyond Date of Substantial Completion, submit within ten days after acceptance, listing the date of acceptance as the beginning of the warranty period.

**PART 2 PRODUCTS**

Not Used.

**PART 3 EXECUTION**

Not Used.

END OF SECTION

**SECTION 02021**

**EXISTING UNDERGROUND/ABOVEGROUND FACILITY LOCATION/VERIFICATION**

## PART 1 GENERAL

### 1.01 WORK INCLUDED

A. This section covers all work required for the field location and verification of existing underground and aboveground facilities prior to commencing work at the specific area(s) of the project site(s).

B. See CONDITIONS OF THE CONTRACT and Division 1, GENERAL REQUIREMENTS, which contain information and requirements that apply to the work specified herein and are mandatory for this project.

### 1.02 RELATED WORK SPECIFIED ELSEWHERE

A. Section 00705 - General Conditions.

B. Section 01005 - General Requirements.

C. Section 01300 - Submittals.

### 1.03 SUBMITTALS

A. Prior to beginning work submit to the ENGINEER a proposed order of construction broken down by project site(s)/area(s) referencing proposed piping and conduit system(s) as shown on the drawings.

B. Prior to beginning work in an area, CONTRACTOR shall submit to the ENGINEER the existing underground facility verification report specified in this section detailing any conflicts discovered and the extent of the area verified. Where no conflicts are discovered, the report shall still be submitted with ANO CONFLICT@ marked.

C. Reports shall be submitted in the format attached at the end of this Section.

D. Submittals shall be made in accordance with the requirements of Section 01300 - Submittals.

### 1.04 DEFINITIONS

A. Underground Facilities: Existing underground facilities (as defined in Section 00705, Article 4, 4.04, A and B), inclusive of wires/cables, conduits, poles, guy wires, piping (water mains, reclaimed mains, force mains, sanitary sewer storm sewer), vaults, manholes, headwalls, catch basins, and the like.

Underground facilities shall be inclusive of shown or indicated facilities and not shown or indicated facilities, as defined.

B. Aboveground Facilities: Existing facilities above existing grades or finished floor, inclusive of pipes, conduits, junction boxes, structures and other locations that require CONTRACTOR to coordinate work to connect to existing feature or facility.

**1.05 EXISTING UNDERGROUND FACILITIES LOCATIONS VERIFICATION**

A. The CONTRACTOR shall obtain the services of a utility location service such as ASunshine State One Call of Florida, Inc.@, where applicable, and the CONTRACTOR shall utilize the OWNER=s utility locate personnel on OWNER property.

B. After completion of utility locations but prior to beginning construction, CONTRACTOR shall walk site and check for potential conflicts with existing underground and aboveground facilities.

C. Walk-thru of site shall be completed prior to beginning construction.

D. If potential conflicts are identified, then the existing facility shall be potholed and the exact location, size, configuration, elevation(s), and material of construction shall be verified by the CONTRACTOR. Potholing shall be completed to fully ascertain the impact of underground facility. It shall be understood that a parallel facility may require potholing along the full length of the proposed installation.

This work shall be included within the scope of this contract, all at no additional cost to the OWNER.

E. CONTRACTOR shall submit to ENGINEER an existing facility location verification report for each project area. Where no conflicts are discovered, the report shall still be submitted with ANO CONFLICT(S)@ indicated.

**1.06 ENGINEER=S REVIEW**

A. ENGINEER shall review the CONTRACTOR=s submitted existing facility location verification reports.

B. Should a conflict be discovered, ENGINEER shall promptly provide written recommendation to address conflict in accordance with the Contract Documents.

C. Should the resolution of a conflict require a change in scope (time or cost), revision shall be addressed in accordance with the Contract documents.

**1.07 PAYMENT**

A. Payment for work specified herein shall be included in the lump sum base bid.

**1.08 COMPLIANCE**

A. Should CONTRACTOR proceed with work prior to completion of facility location verification, CONTRACTOR will be proceeding at their own risk and resolution of conflicts will not be paid for by the OWNER.

B. Should a conflict be found that could not have been discovered through existing facility location verification process specified herein, the conflict will be addressed in accordance with the Contract Documents.

**1.09 ABOVEGROUND FACILITY LOCATION VERIFICATION**

A. All work to confirm tie-in locations above grade or connections to existing facilities above grade shall be considered within the scope of contract. No scheduled or additional payment will be made for this work.

**PART 2 PRODUCTS**

**Not Used.**

**PART 3 EXECUTION**

**Not Used.**

END OF SECTION

**EXISTING UNDERGROUND FACILITY LOCATION/VERIFICATION REPORT**

**Project No.:** _____ **Contractor:** _____

**Project:** _____

**Date:** _____ **Project Site/Area:** _____

**Grid Coordinates (or Stations):** _____ **to** _____

| Conflict Location | Conflict Description |
|---|---|
| | |
| | |
| | |
| | |
| | |

**SECTION 02072**

**DEMOLITION**

## PART 1 GENERAL

### 1.01 WORK INCLUDED

A. The CONTRACTOR shall furnish all labor, materials, equipment, and incidentals required for demolition, removal and disposal Work as shown on the Contract Drawings and as specified herein.

B. Work shall include, but not limited to, the demolition and removal of existing structures, equipment, and other existing site improvements as necessary to install the new Work as shown on the Contract Drawings and as specified herein. Demolition includes structural concrete, foundations, walls, structural steel, metals, masonry, attachments, appurtenances, piping, electrical and mechanical equipment, paving, curbs, walks, and similar existing facilities.

C. See CONTRACT CONDITIONS and Division 1, GENERAL REQUIREMENTS, which contain information and requirements that apply to the Work specified herein and are mandatory for this project.

### 1.02 REFERENCE SPECIFICATIONS, CODES AND STANDARDS

A. Building Codes

1. Florida Building Code, Latest Edition.

B. Reference Standards

1. ANSI A10.6 Safety Standards for Demolition.

### 1.03 SUBMITTALS

A. Submittals shall be made in accordance with the requirements of Section 01300 - Submittals.

B. Submit proposed demolition procedures and schedule of Work.

C. Project record Drawings shall show limits of partial demolition as applicable.

## PART 2 PRODUCTS

Not Used.

## PART 3 EXECUTION

### 3.01 GENERAL

A. Protect existing structures and equipment which are not to be altered.

B. All materials and equipment removed from existing Work shall become the property of the CONTRACTOR except for those which the OWNER has identified and marked for OWNER's use. All materials and equipment marked by the OWNER to remain the OWNER's shall be carefully removed by the CONTRACTOR so as not to be damaged, cleaned and stored on or adjacent to the site in a protected place specified by the ENGINEER or OWNER or loaded onto trucks provided by the OWNER.

The OWNER has preliminarily marked the following items to be salvaged:

1. As noted on drawings.

C. The CONTRACTOR shall dispose of all demolition materials, equipment, debris, and all other items not marked by the OWNER to remain as his, off the site and in conformance with all existing applicable laws and regulations.

D. Pollution Controls

1. Use water sprinkling, temporary enclosures, and other suitable methods to limit the amount of dust and dirt rising and scattering in the air to the lowest practical level. Comply with governing regulations pertaining to environmental protection.

a. Do not use water when it may create hazardous or objectionable conditions such as flooding, pollution, and groundwater contamination.

b. Clean adjacent structures, facilities and improvements of dust, dirt and debris caused by demolition operations.

E. Material generated from demolition shall not be used as backfill.

**3.02 STRUCTURAL DEMOLITION (GENERAL)**

A. The CONTRACTOR shall completely remove all structures as shown on the Contract Drawings unless otherwise directed by the ENGINEER.

B. All concrete, brick, tile, concrete block, roofing materials, reinforcement, structural or miscellaneous metals, plaster, wire mesh and other items contained in or upon the structure shall be removed and taken from the site, unless otherwise approved by the ENGINEER.

**3.03 ELECTRICAL DEMOLITION**

A. Electrical demolition requirements shall be as specified in Section 16001 - Electrical Demolition.

**3.04 MECHANICAL AND EQUIPMENT DEMOLITION (GENERAL)**

A. CONTRACTOR shall completely remove all mechanical and/or equipment items as shown on the drawings.

B. The general demolition scope shall include the following minimum requirements whether indicated on plans or not:

1. Remove exposed ancillary piping and valves.

2. Remove pipe/equipment hangers and support systems which are not needed as a result of the demolition.

3. To the fullest extent possible all required systems shall remain operational. CONTRACTOR shall replace and/or repair existing facilities to remain which may be damaged due to equipment removals.

**3.05 SPECIFIC DEMOLITION REQUIREMENTS**

A. Specific demolition requirements shall be as indicated on drawings.

**3.06 CLEAN-UP AND DISPOSAL**

A. CONTRACTOR shall remove from the site all debris resulting from the demolition operations as it accumulates. Upon completion of the Work, all materials, equipment, waste and debris of every sort shall be removed and the premises shall be left clean, neat and orderly.

B. All materials and debris resulting from demolition and removal operations shall be disposed of off-site in an authorized, permitted disposal site.

C. Dumpster and/or roll-off container service shall be provided by CONTRACTOR from local franchise.

D. Other lawful debris haul-off (dump trucks) by CONTRACTOR.

END OF SECTION

**SECTION 02200**

**EARTHWORK**

## PART 1 GENERAL

### 1.01 WORK INCLUDED

A. The work of this Section includes all earthwork required for construction of the Project. Such earthwork shall include, but not be limited to, the loosening, removing, loading, transporting, depositing, and compacting in its final location of all materials, wet and dry, as required for the purposes of completing the work specified in the Contract Documents, which shall include, but not be limited to, the furnishing, placing, and removing of sheeting and bracing necessary to safely support the sides of all excavation; all pumping, ditching, draining, and other required measures for the removal or exclusion of water from the excavation; the supporting of structures above and below the ground; all backfilling around structures and all backfilling of trenches and pits; the disposal of excess excavated materials; borrow of materials to make up deficiencies for fills; and all other incidental earthwork, all in accordance with the requirements of the Contract Documents.

B. See CONTRACT CONDITIONS and Division 1, GENERAL REQUIREMENTS, which contain information and requirements that apply to the Work specified herein and are mandatory for this project.

### 1.02 RELATED WORK SPECIFIED ELSEWHERE

A. Section 01400 - Quality Control.

### 1.03 REFERENCE SPECIFICATIONS, CODES AND STANDARDS

A. Commercial Standards (Latest Revision):

| | |
|---|---|
| ASTM D 422 | Method for Particle-Size Analysis of Soils. |
| ASTM D 698 | Test Methods for Moisture-Density Relations of Soils and Soil-Aggregate Mixtures, Using 5.5-lb (2.49-kg) hammer and 12-in. (304.8-mm) Drop. |
| ASTM D 1140 | Test Method for Density of Soil in Place by the Sand Cone Method. |
| ASTM D 1557 | Test methods for Moisture-Density Relations of Soils and Soil-Aggregate Mixtures Using 10-lb (4.54-kg) hammer and 18-in. (457-mm) Drop. |
| ASTM D 1633 | Test Method for Compressive Strength of Molded Soil-Cement Cylinders. |
| ASTM D 2419 | Test Method for Sand Equivalent Value of Soils and Fine Aggregate. |
| ASTM D 2487 | Classification of Soils for Engineering Purposes. |

| | |
|---|---|
| ASTM D 2901 | Test Method for Cement Content of Freshly-Mixed Soil-Cement. |
| ASTM D 2922 | Test Methods for Density of Soil and Soil-Aggregate in Place by Nuclear Methods (Shallow Depth). |
| ASTM D 4253 | Test Methods for Maximum Index Density of Soils Using a Vibratory Table. |
| ASTM D 4254 | Test Methods for Minimum Index Density of Soils and Calculation of Relative Density. |

**1.04 TRENCH SAFETY**

A. The CONTRACTOR's attention is directed to the "Florida Trench Safety Act" which mandates the provisions of Subpart P, Section 1926.650 of the OSHA Safety and Health Standards for Construction, which require that all trenches of depth greater than 5 feet shall be shored or sloped to the angle of repose.

B. Submit information in accordance with Section 01300 - Submittals, detailing the method of trench safety to be implemented. Submittal should include geotechnical investigation results if required.

**1.05 QUALITY ASSURANCE**

A. General: All soils testing will be done by a testing laboratory of the OWNER's choice at the OWNER's expense except as specified in Paragraph 1.05C below.

B. Where soil material is required to be compacted to a percentage of maximum density, the maximum density at optimum moisture content will be determined in accordance with ASTM D 1557. Where cohesionless, free draining soil material is required to be compacted to a percentage of relative density, the calculation of relative density will be determined in accordance with ASTM D 4253 and D 4254. Field density in-place tests will be performed in accordance with ASTM D 1556, ASTM D 2922, or by such other means acceptable to the ENGINEER.

C. In case the tests of the fill or backfill show non-compliance with the required density, the CONTRACTOR shall accomplish such remedy as may be required to insure compliance. Subsequent testing to show compliance shall be by a testing laboratory selected by the OWNER and shall be at the CONTRACTOR's expense.

D. Particle size analysis of soils and aggregates will be performed using ASTM D 422.

E. Determination of sand equivalent value will be performed using ASTM D 2419.

F. Unified Soil Classification System: References in these specifications to soil classification types and standards set forth in ASTM D 2487 shall have the meanings and definitions indicated in the chart illustrated at the end of this Section. The chart is reproduced herein for the convenience of the CONTRACTOR only, and no

limitation, amendment, or modification is intended thereby. The CONTRACTOR shall be bound by all applicable provisions of said ASTM D 2487 in the interpretation of soil classifications.

**PART 2 PRODUCTS**

**2.01 SUITABLE FILL AND BACKFILL MATERIAL REQUIREMENTS**

A. General: Fill, backfill, and embankment materials shall be suitable selected or processed clean, fine earth, rock, or sand, free from grass, roots, brush, or other vegetation.

B. Fill and backfill materials to be placed within 6 inches of any structure or pipe shall be free of rocks or unbroken masses of earth materials having a maximum dimension larger than 3 inches.

C. Suitable Materials: Soils not classified as unsuitable as defined in Paragraph entitled, "Unsuitable Material" herein, are defined as suitable materials and may be used in fills, backfilling, and embankment construction subject to the specified limitations. In addition, when acceptable to the ENGINEER, some of the material listed as unsuitable may be used when thoroughly mixed with suitable material to form a stable composite.

D. Suitable materials may be obtained from on-site excavations, may be processed on-site materials, or may be imported. If imported materials are required to meet the requirements of this Section or to meet the quantity requirements of the project the CONTRACTOR shall provide the imported materials within the scope of the Contract, unless a unit price item is included for imported materials in the bidding schedule.

E. The following types of suitable materials are designated and defined as follows:

1. Type A: Crushed limerock or sand with 100 percent passing a 1-inch sieve and a sand equivalent value not less than 50.
2. Type B: Crushed limerock or sand with 100 percent passing a ½-inch sieve and a sand equivalent value not less than 50.
3. Type C: Sand with 100 percent passing a 3/8-inch sieve, at least 90 percent passing a Number 4 sieve, and a sand equivalent value not less than 30.
4. Type D: Crushed limerock with 100 percent passing a 1-inch sieve and not more than 10 percent passing a Number 4 sieve.
5. Type E: Crushed limerock with 100 percent passing a 3/4-inch sieve and not more than 10 percent passing a Number 4 sieve.
6. Type F: Crushed limerock meeting the following gradation requirements:

| Sieve Size | Percentage Passing |
|---|---|
| 2-inch | 100 |
| 1-1/2-inch | 90 - 100 |
| 1-inch | 20 - 55 |
| 3/4-inch | 0 - 15 |
| No. 200 | 0 - 3 |

7. Type G: Crushed rock aggregate base material of such nature that it can be compacted readily by watering and rolling to form a firm, stable base for pavements. At least 97% of the material shall pass a 3-1/2 inch screen and the material shall be

uniformly graded uniformly down to the 200 sieve. The liquid limit shall not exceed 35 and the plastic index shall not exceed 10. For stabilized base, the material shall meet all of the above requirements except that 97% shall pass a 1-1/2 inch screen.

8. Type H: Drainrock shall be crushed rock or gravel, durable and free from slaking or decomposition under the action of alternate wetting or drying. The material shall be uniformly graded and shall meet the following gradation requirements:

| Sieve Size | Percentage Passing |
|---|---|
| 1-inch | 100 |
| 3/4-inch | 90 - 100 |
| 3/8-inch | 40 - 100 |
| No. 4 | 25 - 40 |
| No. 8 | 18 - 33 |
| No. 30 | 5 - 15 |
| No. 50 | 0 - 7 |
| No. 200 | 0 - 3 |

The drainrock shall have a sand equivalent value not less than 75.

9. Type I: Any other suitable material as defined in Paragraph 2.01, herein.

10. Type J: Material which consists of Type H material, or any mixture of Types B, C, G, and H materials which has been cement-treated so that the cement content of the material is not less than 5 percent by weight when tested in accordance with ASTM D 2901. The ultimate compressive strength at 28 days shall be not less than 400 psi when tested in accordance with ASTM D1633.

11. Type K: Stockpiled topsoil material which has been obtained at the site by removing soil to a depth not exceeding 2 feet. Removal of the topsoil shall be done after the area has been stripped of vegetation and debris as specified.

**2.02 UNSUITABLE MATERIAL**

A. Unsuitable soils for fill material shall include soils which, when classified under ASTM D 2487, fall in the classifications of Pt, OH, CH, MH, HL, or SC.

B. In addition, any soil which cannot be compacted sufficiently to achieve the percentage of maximum density specified for the intended use, shall be classed as unsuitable material.

**2.03 USE OF FILL, BACKFILL, AND EMBANKMENT MATERIAL TYPES**

A. Use the types of materials designated herein for all required fill, backfill, and embankment construction hereunder.

B. Where these Specifications conflict with the requirements of any local agency having jurisdiction, or with the requirements of a material manufacturer, the ENGINEER shall be immediately notified. In case of conflict therewith, the CONTRACTOR shall use the most stringent requirement, as determined by the ENGINEER.

C. Fill and backfill types shall be used in accordance with the following provisions:
   1. Embankment fills shall be constructed of Type I material, as defined in Paragraph 2.01E, herein, or any mixture of Type I and Type A through Type H materials.
   2. Pipe zone backfill, as defined under "Pipe and Utility Trench Backfill" herein, shall consist of the following materials for each pipe material listed below. Where pipelines are installed on grades exceeding 4 percent, and where backfill materials are graded such that there is less than 10 percent passing a Number 4 sieve, trench plugs of Type J material shall be provided at minimum intervals of 200 feet.
      a. Mortar coated pipe and concrete pipe, shall be provided Type A, B, C, D, or E pipe zone backfill material.
      b. Coal tar enamel coated pipe, polyethylene encased pipe, tape wrapped pipe, and other non-mortar coated pipe shall be backfilled with Type C pipe zone backfill material.
      c. Plastic pipe and PVC pipe shall be backfilled with Types B, C, or E pipe zone backfill material.
   3. Trench zone backfill for pipelines as defined under "Pipe and Utility Trench Backfill" shall be Type I backfill material or any of Types A through H backfill materials or any mixture thereof.
   4. Final backfill material for pipelines under paved areas, as defined under "Pipe and Utility Trench Backfill" shall be Type G backfill material. Final backfill under areas not paved shall be the same materials as that used for trench backfill, except that Type K material shall be used for final backfill in agricultural areas unless otherwise shown or specified.
   5. Trench backfill and final backfill for pipelines under structures shall be the same material as used in the pipe zone, except where concrete encasement is required by the Contract Documents.
   6. Aggregate base materials under pavements shall be Type G material constructed to the thicknesses shown or specified.
   7. Backfill around structures shall be Type I material, or Types A through Type H materials, or any mixture thereof.
   8. Backfill materials beneath structures shall be as follows:
      a. Drainrock materials under reservoirs or other water retaining structures with underdrain systems shall be Type H material.
      b. Under concrete reservoirs or other water retaining structures without underdrain systems, Types G or H materials shall be used.
      c. Under structures where groundwater must be removed to allow placement of concrete, Type F material shall be used.
      d. Under all other structures, Type D, E, G, or H material shall be used.
   9. Backfill used to replace pipeline trench over-excavation shall be a layer of Type F material with a 6-inch top filter layer of Type E material for wet trench conditions or the same material as used for the pipe zone backfill if the trench conditions are not wet.
   10. The top 6 inches of fill on reservoir roofs, embankment fills around reservoirs, and all other embankment fills shall consist of Type K material, topsoil.
   11. Where specified or shown, pea gravel shall be Type E material, gradations.

**PART 3 EXECUTION**

**3.01 REMOVAL OF WATER**

A. Provide and operate equipment adequate to keep all excavations and trenches free of water. Remove all water during periods when concrete is being deposited, when pipe is being laid, during the placing of backfill, and at such other times as required for efficient and safe execution of the Work. Avoid settlement or damage to adjacent property. Dispose of water in a manner that will not damage adjacent property. When dewatering open excavations, dewater from outside the structural limits and from a point below the bottom of the excavation when possible. Design dewatering system to prevent removal of fines from existing ground.

B. CONTRACTOR shall determine all requirements, make all necessary arrangements and obtain all permits which may be required for dewatering operations.

**3.02 STRUCTURE, ROADWAY, AND EMBANKMENT EXCAVATION**

A. General: Except where specifically provided to the contrary, excavation shall include the removal of all materials of whatever nature encountered, including all obstructions of any nature that would interfere with the proper execution and completion of the work. The removal of said materials shall conform to the lines and grades shown or ordered. Furnish, place, and maintain all supports and shoring that may be required for the sides of the excavations, and all pumping, ditching, or other measures for the removal or exclusion of water. Dispose of storm water, groundwater, and wastewater reaching the site of the Work from any source so as to prevent damage to the Work or adjoining property. Excavations shall be sloped or otherwise supported in a safe manner in accordance with applicable State safety requirements and the requirements of OSHA Safety and Health Standards for Construction (29CFR1926).

B. Excavation Beneath Structures and Embankments: Except where otherwise specified for a particular structure or ordered by the ENGINEER, excavation shall be carried to the grade of the bottom of the footing or slab. Where shown or ordered, areas beneath structures or fills shall be over-excavated. The subgrade areas beneath embankments shall be excavated to remove not less than the top 6 inches of original material and where such subgrade is sloped, the original material shall be benched. When such over-excavation is shown, both over-excavation and subsequent backfill to the required grade shall be performed by the CONTRACTOR. When such over-excavation is not shown but is ordered by the ENGINEER, such over-excavation and any resulting backfill will be paid for under a separate unit price bid item if such bid item has been established; otherwise payment will be made in accordance with a negotiated price. After the required excavation or over-excavation has been completed, the exposed surface shall be scarified to a depth of 6 inches, brought to optimum moisture content, and rolled with heavy compaction equipment to obtain 95 percent of maximum density.

C. Excavation Beneath Paved Areas: Excavation under areas to be paved shall extend to the bottom of the aggregate base, if such base is called for; otherwise it shall extend for the paving thickness. After the required excavation has been completed, the exposed

surface shall be scarified, brought to optimum moisture content, and rolled with heavy compaction equipment to obtain 95 percent of maximum density.

D. Notification of Engineer: Notify the ENGINEER at least 3 days in advance of completion of any structure excavation and allow the ENGINEER a review period of at least one day before the exposed foundation is scarified and compacted or is covered with backfill or with any construction materials.

**3.03 PIPELINE AND UTILITY TRENCH EXCAVATION**

A. General: Unless otherwise shown or ordered, excavation for pipelines and utilities shall be open-cut trenches. Trench widths shall be kept as narrow as is practical for the method of pipe zone densification and trench safety selected by the CONTRACTOR, but shall have a minimum width at the bottom of the trench equal to the outside diameter of the pipe plus 24 inches for mechanical compaction methods and 18 inches for water consolidation methods. The maximum width at the top of the pipe shall be equal to the outside diameter of the pipe plus 36 inches for pipe diameters 18-inches and larger and to the outside diameter of the pipe plus 24 inches for pipe diameters less than 18-inches.

B. Trench Bottom: Except when pipe bedding is required, the bottom of the trench shall be excavated uniformly to the grade of the bottom of the pipe. The trench bottom shall be given a final trim, such that each pipe section when first laid will be continually in contact with the ground along the extreme bottom of the pipe. Rounding out the trench to form a cradle for the pipe will not be required.

C. Open Trench: The maximum amount of open trench permitted in any one location shall be 500 feet, or the length necessary to accommodate the amount of pipe installed in a single day, whichever is less. All trenches shall be fully backfilled at the end of each day or, in lieu thereof, shall be covered by heavy steel plates adequately braced and capable of supporting vehicular traffic in those locations where it is impractical to backfill at the end of each day. The above requirements for backfilling or use of steel plate will be waived in cases where the trench is located further than 100 feet from any traveled roadway or occupied structure. In such cases, however, barricades and warning lights meeting OSHA requirements shall be provided and maintained.

D. Trench Over-Excavation: Where the Drawings indicate that trenches shall be over-excavated, they shall be excavated to the depth shown, and then backfilled to the grade of the bottom of the pipe.

E. Over-Excavation: When ordered by the ENGINEER, whether indicated on the Drawings or not, trenches shall be over-excavated beyond the depth shown. Such over-excavation shall be to the depth ordered. The trench shall then be backfilled to the grade of the bottom of the pipe. All work specified in this Section shall be performed within the scope of the Contract when the over-excavation ordered by the ENGINEER is less than 6 inches below the limits shown. When the over-excavation ordered by the ENGINEER is 6 inches or greater below the limits shown, additional payment will be made to the CONTRACTOR for that portion of the work which is located below said 6-inch

distance. Said additional payment will be made under separate unit price bid items for over-excavation and bedding if such bid items have been established; otherwise payment will be made in accordance with a negotiated price.

F. Where pipelines are to be installed in embankment or structure fills, the fill shall be constructed to a level at least one foot above the top of the pipe before the trench is excavated.

**3.04 OVER-EXCAVATION NOT ORDERED, SPECIFIED, OR SHOWN**

A. Any over-excavation carried below the grade ordered, specified, or shown, shall be backfilled to the required grade with the specified material and compaction. Such work shall be performed by the CONTRACTOR at its own expense.

**3.05 EXCAVATION IN VICINITY OF TREES**

A. Except where trees are shown to be removed, trees shall be protected from injury during construction operations. No tree roots over 2 inches in diameter shall be cut without express permission of the ENGINEER. Trees shall be supported during excavation by any means previously reviewed by the ENGINEER.

**3.06 ROCK EXCAVATION**

A. CONTRACTOR shall review existing site conditions and available geotechnical exploration reports to confirm the presence of and depth of rock that may be encountered as the result of excavation.

B. Prior to bid, an excavation contractor knowledgeable with limestone and other rock formations local to project should be retained by CONTRACTOR to independently evaluate the formation to determine the appropriate excavation equipment and methods to be used.

C. Cost of all rock excavation and disposal of unsuitable rock material shall be included in CONTRACTOR’s bid.

**3.07 DISPOSAL OF EXCESS EXCAVATED MATERIAL**

A. Remove and dispose of all excess excavated material at a site selected by the OWNER and reviewed by the ENGINEER.

**3.08 BACKFILL - GENERAL**

A. Backfill shall not be dropped directly upon any structure or pipe. Backfill shall not be placed around or upon any structure until the concrete has attained sufficient strength to withstand the loads imposed. Backfill around water retaining structures shall not be placed until the structures have been tested, and the structures shall be full of water while backfill is being placed.

B. Except for drainrock materials being placed in over-excavated areas or trenches, backfill shall be placed after all water is removed from the excavation.

## 3.09 PLACING AND SPREADING OF BACKFILL MATERIALS

A. Backfill materials shall be placed and spread evenly in layers. When compaction is achieved using mechanical equipment the layers shall be evenly spread so that when compacted each layer shall not exceed 12- inches in thickness. When compaction is achieved using flooding and jetting methods, each layer shall not exceed 3 feet in thickness after compaction.

B. During spreading each layer shall be thoroughly mixed as necessary to promote uniformity of material in each layer. Pipe zone backfill materials shall be manually spread around and under the pipe so that when compacted the pipe zone backfill will provide uniform bearing and side support.

C. Where the backfill material moisture content is below the optimum moisture content water shall be added before or during spreading until the property moisture content is achieved.

D. Where the backfill material moisture content is too high to permit the specified degree of compaction the material shall be dried until the moisture content is satisfactory.

## 3.10 COMPACTION OF FILL, BACKFILL, AND EMBANKMENT MATERIALS

A. Each layer of Types A, B, C, G, H, I, and K backfill materials as defined in Paragraph 2.01E, herein, where the material is graded such that at least 10 percent passes a No. 4 sieve, shall be mechanically compacted to the specified percentage of maximum density. Equipment that is consistently capable of achieving the required degree of compaction shall be used and each layer shall be compacted over its entire area while the material is at the required moisture content.

B. Each layer of Type D, E, F, and J backfill materials shall be compacted by means of at least 2 passes from a flat plate vibratory compactor. When such materials are used for pipe zone backfill, vibratory compaction shall be used at the top of the pipe zone or at vertical intervals of 24 inches, whichever is the least distance from the subgrade.

C. Flooding, ponding, or jetting shall not be used for fill on roads, backfill around structures, backfill around reservoir walls, for final backfill materials, or aggregate base materials.

D. Pipe zone backfill materials that are granular may be compacted by a combination of flooding and vibration using concrete vibrators or by jetting, when acceptable to the ENGINEER.

E. Pipeline trench zone backfill materials, containing 5 percent or less of material passing a No. 200 sieve, may be compacted using flooding and jetting or vibration if the CONTRACTOR uses effective procedures that yield the specified compaction test results. Flooding and jetting shall not be done in such a manner that the pipe or nearby utilities are damaged, in areas of poorly draining or expansive soils, or where the use of the procedure is prohibited by any agency having jurisdiction over the street or right-of-way. Suitable jet pipes or immersible vibrators shall be used so that each backfill layer is saturated and consolidated to its full depth before the next layer is placed. Jet pipes shall be kept at least 6

inches away from the pipe where the backfill is being consolidated and 2 feet away from other pipes or utilities.

F. Equipment weighing more than 10,000 pounds shall not be used closer to walls than a horizontal distance equal to the depth of the fill at that time. Hand operated power compaction equipment shall be used where use of heavier equipment is impractical or restricted due to weight limitations.

G. Compaction Requirements: The following compaction test requirements shall be in accordance with ASTM D 1557 for Type A, B, C, G, H, I, and K materials. Where agency or utility company requirements govern, the highest compaction standards shall apply.

| Location or Use of Fill | Percentage Of Maximum Density |
|---|---|
| Pipe zone backfill portion above bedding for flexible pipe. | 95 |
| Pipe zone backfill bedding and over-excavated zones under bedding/ pipe for flexible pipe. | 95 |
| Pipe zone backfill portion above bedding for rigid pipe. | 95 |
| Pipe zone backfill bedding and over-excavated zones under bedding/ pipe for rigid pipe. | 95 |
| Final backfill, beneath paved areas or structures. | 98 |
| Final backfill, not beneath paved areas or structures. | 90 |
| Trench zone backfill. | 90 |
| Embankments. | 90 |
| Embankments, beneath paved areas of structures. | 98 |
| Backfill beneath structures, reservoirs. | 98 |
| Backfill around structures, on reservoir or structure roof. | 80 |
| Topsoil (Type K material) | 80 |
| Aggregate base (Type G material) | 98 |

H. Trench Backfill Requirements: The pipe has been structurally designed based upon the trench configuration specified in Section 3.03A, herein.

I. Maintain the indicated trench cross section up to a horizontal plane lying 6 inches above the top of the pipe.

J. If, at any location under said horizontal plane, the trench walls we sloped or exceed the maximum trench widths indicated in the Contract Documents are exceeded, the pipe zone backfill shall be "improved" or the pipe class increased as specified herein, within the scope of the Contract. "Improved" backfill shall mean sand backfill or other equivalent materials acceptable to the ENGINEER.

K. If the allowable deflection specified for the pipe is exceeded, expose and reround or replace the pipe, repair all damaged lining and coating, and reinstall the pipe zone material and trench backfill as specified within the scope of the Contract.

**3.11 PIPE AND UTILITY TRENCH BACKFILL**

A. Pipe Zone Backfill: The pipe zone is defined as that portion of the vertical trench cross-section lying between a plane 6 inches below the bottom surface of the pipe, i.e., the trench subgrade, and a plane at a point 6 inches above the top surface of the pipe. The bedding for flexible pipe is defined as that portion of pipe zone backfill material between the trench subgrade and the bottom of the pipe. The bedding for rigid pipe is defined as that portion of the pipe zone backfill material between the trench subgrade and a level line which varies from the bottom of the pipe to the springline as shown.

B. Bedding shall be provided for all sewers, drainage pipelines, and other gravity flow pipelines in accordance with the details shown on the Drawings and materials specified herein.

C. Where bedding is required after compaction of the bedding, perform a final trim using a stringline for establishing grade, such that each pipe section when first laid will be continually in contact with the bedding along the extreme bottom of the pipe.

D. The pipe zone shall be backfilled with the specified backfill material. Exercise care to prevent damage to the pipeline coating, cathodic bonds, or the pipe itself during the installation and backfill operations.

E. Trench Zone Backfill: After the pipe zone backfill has been placed as specified above, and after all excess water has completely drained from the trench, backfilling of the trench zone may proceed. The trench zone is defined as that portion of the vertical trench cross-section lying between a plane 6 inches above the top surface of the pipe and a plane at a point 18 inches below the finished surface grade, or if the trench is under pavement, 18 inches below the roadway subgrade. If flooding, ponding, or jetting is used the pipe shall be filled with water to prevent flotation.

F. Final Backfill: Final backfill is all backfill in the trench cross-sectional area within 10 inches of finished grade, or if the trench is under pavement, all backfill to the roadway base restoration.

**3.12 EMBANKMENT CONSTRUCTION**

A. The area where an embankment is to be constructed shall be cleared of all vegetation, roots and foreign material. Following this, the

surface shall be moistened, scarified to a depth of 6 inches, and rolled or otherwise mechanically compacted to 95 percent of maximum density under structures and paved areas, and 90 percent of maximum density elsewhere.

B. Where embankment or structure fills are constructed over pipelines, the first 4 feet of fill over the pipe shall be constructed using light placement and compaction equipment that does not damage the pipe.

**3.13 FIELD DENSITY AND MOISTURE TESTS**

A. Notify the OWNER-provided independent soil testing company to determine the in-place density and moisture content of the subgrade and compacted fill by any one or combination of the following methods: ASTM D 1556, D 3017, or D 2922. The CONTRACTOR shall cooperate with this testing work by leveling small test areas as designated by the soil testing company. These test results, certified by the soil testing company and reviewed by the ENGINEER, shall indicate that the actual soil compaction found meets these Specifications. Testing will occur as the work progresses and compliance with the Specifications is required prior to final acceptance and payment for the work.

B. A minimum of one test every 200 cubic yards of fill, one test per every 2,000 square feet of subgrade, or 4 tests per lift, whichever is larger in number of tests, shall be conducted.

C. The OWNER shall pay for the initial testing. Any retesting required to show compliance with these Specifications shall be paid by CONTRACTOR within the Scope of the Contract.

END OF SECTION

**SECTION 02500**

**RESTORATION AND CLEANUP**

## PART 1 GENERAL

### 1.01 WORK INCLUDED

A. This section covers the work necessary to provide and coordinate the restoration and cleanup of areas disturbed during construction.

B. All areas disturbed or damaged during construction shall be restored to conditions existing prior to the work.

C. See GENERAL CONDITIONS and Division 1, General Requirements, which contain information and requirements that apply to the work specified herein and are mandatory for this project.

### 1.02 RELATED WORK SPECIFIED ELSEWHERE

A. Section 02510 - Asphaltic Concrete Pavement and Base.

B. Section 02630 - Concrete Sidewalks, Drives and Curbs.

### 1.03 SUBMITTALS

A. Documentation to confirm conformance of materials with the requirements of this specification.

B. Submittals shall be made in accordance with the GENERAL CONDITIONS.

### 1.04 LIMITS OF RESTORATION

A. All areas disturbed by progress of work and/or CONTRACTOR’s operations shall be restored to limits disturbed unless noted otherwise on drawings.

B. Proposed new sidewalks, paving, sod, landscaping, and the like shall be completed as shown on the drawings.

## PART 2 PRODUCTS

### 2.01 ASPHALTIC CONCRETE PAVEMENT AND BASE

A. Materials shall be as specified in Section 02510 - Asphaltic Concrete Pavement and Base.

### 2.02 CONCRETE PAVEMENT

A. Materials for concrete driveway approaches, sidewalks and curbs shall be as specified in Section 02630 - Concrete sidewalks, Drives and Curbs.

## 2.03 SOD

A. Sod shall be of firm texture having a compacted growth and good root development. Sod is to contain no weeds or undesirable native grasses and be free from fungus, vermin and diseases. Sod to be not less than two (2) years old. Provide sod capable of growth and development when planted (viable, not dormant).

B. Sod shall be selected to match the existing varieties and types encountered, as applicable. Sod shall be Bahia for non-irrigated areas and Floratam for irrigated areas.

C. Sod selection shall be approved in field by resident project representative.

## 2.04 LANDSCAPING

A. All existing landscaping damaged or disturbed by CONTRACTOR shall be replaced in kind by the CONTRACTOR as directed in field by the resident project representative. All such work shall be considered incidental restoration and covered under the work required by this contract.

B. Preconstruction video tape shall be used to assist in landscape restoration requirements.

C. New landscaping improvements shall be as noted on drawings.

## 2.05 MISCELLANEOUS LANDSCAPING MATERIALS

A. Water

1. Water shall be potable from municipal water supplies or from wastewater reuse system (where available).

B. Fertilizer

1. New ground covers: Fertilize with an approved fertilizer of fifty percent (50%) or greater organic 6-6-6 or 8-8-8 with minor elements including, but not limited to, iron, zinc and manganese.

## 2.06 CLEANING MATERIALS

A. Use materials which will not create hazards to health or property, and which will not damage surfaces.

B. Use only materials and methods recommended by manufacturer of material or equipment being cleaned.

## PART 3 EXECUTION

### 3.01 ASPHALTIC CONCRETE PAVEMENT

A. Restore asphaltic concrete as shown on the Drawings and specified in Section 02510 - Asphaltic Concrete Pavement and Base.

### 3.02 CONCRETE PAVEMENT RESTORATION

A. Restore concrete drives, sidewalks and curbs as shown on the Drawings and specified in Section 02630 - Concrete Sidewalks, Driveways and Curbs.

### 3.03 SODDING

A. Sod shall be placed as indicated on Drawings or to the extent to achieve the conditions existing prior to the work. General sod limits are as follows:

1. All unpaved areas disturbed within the project site shall be prepared and sodded as specified herein.

2. Other areas indicated on drawings within the project site shall be prepared and sodded as specified herein.

B. Properly prepare subgrade prior to placing sod. Remove excess materials, hand rake and level as necessary to place sod evenly and at grades to match adjacent existing surfaces. Finish sod installation shall provide unimpeded sheet flow of surface water drainage.

C. Lay sod to form a solid mass with tight-fitting joints. Butt ends and sides of sod strips. Do not overlap. Stagger strips to offset joints in courses. Tamp or roll sod lightly to insure uniform contact with subgrade. Fill minor cracks between pieces of sod with sifted soil.

D. Where necessary to prevent slippage of new installed sod, peg or pin sod securely using 1" x 1" x 6" wood pegs, driven flush with top of sod.

E. Water sod thoroughly with a fine spray immediately after installation.

F. Do not install sod on Friday, Saturday or Sunday, unless provisions are made to water manually or automatically.

### 3.04 LANDSCAPING RESTORATION

A. All landscaping that has been disturbed or damaged shall be replaced to match existing. The restoration work shall be as per directions of the resident project representative.

## 3.05 IRRIGATION SYSTEM RESTORATION

A. Repair existing sprinkler heads, irrigation equipment and piping at the existing site to conditions and coverage existing prior to work. Materials shall be as specified in Section 15400 - Plumbing.

## 3.06 CLEANING

A. In addition to removal of debris and cleaning specified in other sections, clean interior and exterior exposed-to-view surfaces.

B. Remove temporary protection and labels not required to remain.

C. Clean finishes free of dust, stains, films and other foreign substances.

D. Clean transparent and glossy materials to a polished condition; remove foreign substances. Polish reflective surfaces to a clear shine.

E. Clean surfaces of equipment; remove excess lubrication.

F. Clean ventilating louvers of dust and debris.

G. Maintain cleaning until Final Completion.

H. Remove waste, debris, and surplus materials from site. Clean grounds; remove stains, spills, and foreign substances from paved areas and sweep clean. Rake clean other exterior surfaces.

## 3.07 SOD AND LANDSCAPING MAINTENANCE

A. CONTRACTOR shall be responsible for maintaining all newly sodded areas and new landscaping through final completion of the project. Maintenance shall include but not be limited to irrigation and mowing.

B. CONTRACTOR may make arrangements with the individual property owners to complete landscaping maintenance. However, CONTRACTOR shall remain responsible for landscaping maintenance through final completion.

C. All sod or other landscaping improvements found dead prior to final completion shall be replaced by CONTRACTOR at no additional cost to the OWNER.

## 3.08 RESTORATION REQUIREMENTS (GENERAL)

A. Remove all debris generated by work from site.

B. Restore all existing paved areas (to remain) that are impacted by work in accordance with standard details as applicable.

C. Pave all areas as indicated by the drawings.

D. Sod all lawn areas disturbed by work in accordance with these specifications.

E. Provide new landscaping improvements as noted on the drawings.

F. Where applicable, repair existing sprinkler heads, irrigation equipment and piping at the site to conditions and coverage existing prior to work. Materials shall match existing. Existing sprinkler heads shall be reused.

END OF SECTION

**SECTION 02510**

**ASPHALTIC PAVEMENT AND BASE**

## PART 1 GENERAL

### 1.01 WORK INCLUDED

A. Perform all work associated with Asphaltic Concrete Pavement and Base as shown and as specified herein including all labor, materials, equipment supplies, and facilities associated with providing a finished product satisfying all the requirements of the Contract Documents.

B. See CONTRACT CONDITIONS and Division 1, GENERAL REQUIREMENTS, which contain information and requirements that apply to the Work specified herein and are mandatory for this project.

### 1.02 RELATED WORK SPECIFIED ELSEWHERE

A. Section 01400 - Quality Control.

B. Section 02200 - Earthwork.

### 1.03 REFERENCE SPECIFICATIONS, CODES, AND STANDARDS

A. Commercial Standards: References in these specifications to "Standard Specifications" shall mean the "Standard Specifications for Road and Bridge Construction," Florida Department of Transportation, latest edition.

### 1.04 SUBMITTALS

A. Submit, in writing, materials testing reports, job-mix formulas, and other pertinent information acceptable to the ENGINEER demonstrating that materials and methods proposed for use will comply with the provisions of this Section in accordance with Section 01300 - Submittals.

B. Suitability Tests of Proposed Materials: Tests for conformance with the Specifications shall be performed prior to start of the work. The samples shall be identified to show the name of the material, aggregate source, name of the supplier, contract number, and the segment of the WORK where the material represented by the sample is to be used. Results of all tests shall be submitted to the ENGINEER for review. Materials to be tested shall include aggregate base, coarse and fine aggregate for paving mixtures, mineral filler, and asphalt cement.

C. Trial Batch: Before placing any paving material, a testing laboratory acceptable to the ENGINEER shall prepare a trial batch of asphalt concrete for each job-mix formula to be used for the Work. The trial batch shall be prepared using the aggregates and asphalt cement proposed, and acceptable to the ENGINEER. The compacted trial batch shall provide a basis for computing the voids ratio, provide an indication of the optimum asphalt content, and establish a basis for controlling compaction during construction. The cost of not more than two laboratory trial batch tests will be borne by the TRIBE but the CONTRACTOR shall furnish the materials at no cost. Any additional

trial batch testing required shall be performed at the expense of the CONTRACTOR within the Scope of the Contract.

**1.05 QUALITY CONTROL**

A. Testing by an independent testing firm, employed by OWNER, will be required to verify proper placement and compaction of the subbase, base and pavement sections.

B. Inspection and testing laboratory services shall be as specified in Section 01400 - Quality Control.

**PART 2 PRODUCTS**

**2.01 LIMEROCK BASE**

A. Materials for limerock base shall be as specified in Section 911 of the Standard Specifications.

B. Limerock material shall have an average LBR value of not less than 100.

**2.02 PRIME COAT**

A. Prime coat material shall be cut-back asphalt grade RC-70 or RC-250 meeting the requirements of Section 916-3.

B. Sand cover shall be applied over prime coat if traffic will be using area before final paving is laid.

**2.03 TACK COAT**

A. Tack coat material shall be as specified in Section 300-2.3 of the Standard Specifications.

**2.04 ASPHALTIC CONCRETE**

A. Type S-I Asphaltic Concrete conforming to all applicable requirements of Sections 320, 330 and 331 of the Standard Specifications.

B. Substitute asphaltic concrete types may be used providing they meet or exceed the stability of Type S-I and the cost does not exceed that of Type S-I.

C. Where indicated by drawings, Type S-III Asphaltic Concrete conforming to all applicable requirements of Sections 320, 330 and 333 of the Standard Specifications, may be used for overlay purposes.

D. Superpave (SP) and Friction Course (FC) mixes shall conform to all applicable requirements of Sections 234, 334, and 337 of the FDOT Standard Specifications.

E. Application Schedule:

| Application | Village | FDOT |
|---|---|---|
| Overlay | 1" FC 9.5 | 1-1/2" FC 12.5 |
| Patch | 1-1/2" SP 12.5 | 1-1/2" SP 12.5 |

**2.05 TRAFFIC CONTROL MARKINGS**

A. Thermoplastic stripes and markings shall be as specified in Section 711 of the Standard Specifications.

B. Reflective pavement markers shall be as specified in Section 706 of the Standard Specifications.

C. Signing shall be as specified in Section 700 of the Standard Specifications.

D. Project Application Schedule:

1. Reflective markers shall be 3M raised pavement markers, 290 Series, or equal. Marker type (one way or two way) and color shall be selected per application location.

2. Temporary traffic marking paint shall be Sherwin-Williams Hotline Fast Dry Waterborne Traffic Marking Paint, or equal.

3. Final Thermoplastic traffic markings shall be as manufactured by Crown Technology, LLC, or equal:

White = Tuffline White Alkyd with glass spheres
Yellow = Ecotherm Yellow alkyd with glass spheres

**PART 3 EXECUTION**

**3.01 SUBGRADE PREPARATION**

A. The subgrade shall be prepared as specified in the Section 02200 - Earthwork as applicable to roadways. The surface of the subgrade after compaction shall be hard, uniform, smooth and true to grade and cross-section. Subgrade for pavement shall not vary more than 0.02 foot from the specified grade and cross section. Subgrade for base material shall not vary more than 0.04 foot from the specified grade and cross section. Compaction on Subgrade shall be 98% of the maximum density as determined by AASHTO T180 in the upper 12 inches.

**3.02 LIMEROCK BASE**

A. Limerock base shall be provided where shown and to the thickness shown. Imported aggregate bases shall be delivered to the job site as uniform mixtures and each layer shall be spread in one operation. Segregation shall be avoided and the base shall be free of pockets of coarse or fine material. Where the required thickness is 6 inches or less, the base materials may be spread and compacted in one course. Where the required thickness is more than 6 inches, the base material shall be spread and compacted in two or more courses of approximately equal thickness and the maximum compacted thickness of any one course shall not exceed 8 inches. The relative compaction of each course of limerock base shall be not less than 98 percent of maximum density at optimum moisture content when measured in accordance with ASTM D 1557. The compacted surface of the finished limerock base shall be hard, uniform, smooth and at any point shall not vary more than 0.02 feet from the specified grade or cross section.

B. Requirements for limerock base other than those above shall be as specified by Section 200 of the Standard Specifications.

**3.03 PRIME COAT**

A. Prime coat shall be applied when the limerock base meets the specified density requirements and the moisture content of the top half of the base does not exceed 90 percent of the optimum moisture of the base material. At the time of priming, the limerock base shall be firm, unyielding and in such a condition that no undue distortion will occur.

B. Prime coat shall be applied according to Section 300-7 of the Standard Specifications.

**3.04 TACK COAT**

A. A tack coat shall be applied to the base and to the contact surfaces of all cold pavement joints, curbs, gutters, manholes and the like before the asphalt pavement is placed. Care shall be taken to prevent the application of tack coat material to surfaces that will not be in contact with the new asphaltic concrete pavement.

B. Tack coat shall be applied in accordance with Section 300-8 of the Standard Specifications.

**3.05 ASPHALTIC CONCRETE PLACEMENT, SPREADING AND COMPACTION**

A. Paving shall be as specified in Section 330 of the Standard Specifications and the specifications herein.

B. At the time of placement and compaction at the Work site, the temperature of mixture shall be within $\pm$30E F of the mix design temperature.

C. Asphalt concrete shall not be placed when the atmospheric temperature is below 40 degrees F or during unsuitable weather.

D. The asphaltic concrete shall be evenly spread upon the subgrade, base or milled pavement to such a depth that, after rolling, it will be of the specified cross section and grade of the course being constructed.

E. The depositing, distributing, and spreading of the asphalt concrete shall be accomplished in a single, continuous operation by means of a self-propelled mechanical spreading and finishing machine designed especially for that purpose. The machine shall be equipped with a screed or strike-off assembly capable of being accurately regulated and adjusted to distribute a layer of the material to a definite predetermined thickness. When paving is of a size or in a location that use of a self-propelled machine is impractical the ENGINEER may waive the self-propelled requirement.

F. Spreading, once commenced, must be continuous without interruption.

G. The mix shall be compacted immediately after placing as follows:

1. Initial rolling with a steel-wheeled tandem roller, steel three-wheeled roller, vibratory roller, or a pneumatic-tired roller shall follow the paver as closely as possible.

2. Intermediate rolling with a pneumatic-tired roller shall be done immediately behind the initial rolling.

3. Final rolling with a steel-wheeled tandem roller shall eliminate marks from previous rolling.

4. In areas too small for rollers a vibrating plate compactor or hand tamper shall be used to achieve thorough compaction.

H. Upon completion, the pavement shall be true to grade and cross-section. When a 10-foot straightedge is laid on the finished surface parallel to the center of the paved area, the surface shall not vary from the edge of the straightedge more than 1/8-inch except at intersections or changes of grade. In the transverse direction, the surface shall not vary from the edge of the straightedge more than 1/4 inch.

I. The relative density of the asphaltic pavement surface after compaction shall be 98 percent of the density obtained by using ASTM D 1188 or D 2726. A properly calibrated nuclear asphalt testing device may be used for determining the field density of compacted asphalt concrete, or slabs or cores shall be laboratory tested in accordance with ASTM D 1188.

**3.06 TRAFFIC CONTROL MARKING RESTORATION**

A. CONTRACTOR shall be responsible for restoring all traffic striping, reflective markers and signing which are damaged or disturbed during construction.

B. The intent is to restore traffic control to the plan and markings existing prior to construction.

C. Restoration shall conform with all applicable requirements of Sections 706, 710 and 711 of the Standard Specifications.

D. Where a roadway section will be reopened prior to application of traffic markings, the following conditions must be met:

1. Temporary traffic markings must be in place prior to reopening road.

2. Temporary traffic markings are allowable for the ninety (90) day waiting period prior to overlay.

**3.07 MILLING EXISTING ASPHALTIC PAVEMENT**

A. Where milling is required by the drawings, such milling shall be completed in accordance with Section 327 of the Standard Specifications.

B. Depth of milling required shall be as noted on the drawings.

C. Milling equipment shall meet the requirements of Section 327 of the Standard Specifications.

D. Surface shall be swept immediately following completion of milling operations.

E. Milled material generated as result of milling operations shall be removed from site and lawfully disposed of by CONTRACTOR.

**3.08 GENERAL PAVING REQUIREMENTS BY WORK REQUIREMENT**

A. Asphaltic pavement patch:

1. Patches to existing asphaltic pavement areas shall be completed per the standard details shown on the drawings.

2. Patching may be completed prior to or after milling at the option of the CONTRACTOR.

3. Horizontal and vertical dimensions of the patching section components shall meet the minimum requirements of the standard details and applicable specifications herein.

4. Subgrade preparation, placement and compaction of base, placement and compaction of asphalt course(s) shall be completed in accordance with the requirements of these specifications. Patch area only require initial and final compaction with roller or vibratory plate.

5. Quality control and acceptance requirements shall be as specified herein.

B. New asphaltic concrete pavement and base sections/areas

1. New asphaltic concrete pavement and base sections/areas shall be completed per the standard details shown on the drawings.

2. Horizontal and vertical dimensions of the new pavement section components shall meet the minimum requirements of the standard details, the drawing dimensions and applicable specifications herein.

3. Subgrade preparation, placement and compaction of base, placement and compaction of asphalt course(s) shall be completed in accordance with the requirements of these specifications.

4. Quality control and acceptance requirements shall be as specified herein.

C. New asphaltic concrete overlay areas

1. New asphaltic concrete pavement overlay areas shall be completed per the standard details shown on the drawings.

2. All new pavement patches within the proposed overlay areas shall have been completed a minimum of thirty (30) days prior to placement of overlay.

3. Where required by the drawings the milling requirement must be successfully completed in accordance with these specifications prior to placement of the asphaltic overlay.

4. Horizontal and vertical dimensions of the new pavement overlay shall meet the minimum requirements of the standard details, the drawing dimensions and applicable specifications herein.

5. Placement and compaction of asphalt overlay shall be completed in accordance with the requirements of these specifications.

6. Quality control and acceptance requirements shall be as specified herein.

**3.09 QUALITY CONTROL CONFIRMATION REQUIREMENTS**

A. The OWNER=s independent testing firm will monitor all pavement operations per these specifications including but not limited to:

1. Subgrade preparation and compaction.

2. Base course preparation and compaction.

3. Delivery/placement temperature of asphalt paving mixture.

4. Placement and compaction of asphaltic concrete.

5. Confirmation of completion of work per the specified horizontal and vertical grade tolerances.

## 3.10 ACCEPTANCE OF COMPLETED PAVEMENT WORK

A. New pavement (patch, new area or overlay) will be accepted following confirmation that the pavement meets the requirements of the drawings and these specifications as confirmed by the OWNER=s independent testing firm.

B. New Pavement (patch, new area or overlay) found not meeting the requirements of the drawings and these specifications shall be corrected by CONTRACTOR at no cost to OWNER. Correction may require removal and replacement of asphaltic concrete, base course and/or subgrade as directed by ENGINEER based on recommendations of OWNER=s independent testing firm.

END OF SECTION

**SECTION 02630**

**CONCRETE SIDEWALKS, DRIVES AND CURBS**

## PART 1 GENERAL

### 1.01 WORK INCLUDED

A. This Section covers work necessary to construct, replace or repair concrete sidewalks, drives/roadways and curbs as required for this project.

B. Removed or damaged sidewalks, drives and curbs shall be replaced in the same location and to the same dimensions as were the originals unless instructed differently by OWNER or ENGINEER.

C. See CONDITIONS OF THE CONTRACT and Division 1, GENERAL REQUIREMENTS, which contain information and requirements that apply to the work specified herein and are mandatory for this project.

### 1.02 RELATED WORK SPECIFIED ELSEWHERE

A. Section 02200 - Earthwork.

B. Section 03300 - Concrete.

## PART 2 PRODUCTS

### 2.01 FORMS

A. Materials for forms shall be 2-inch dressed lumber straight and free from defects or standard metal forms may be used. Where short-radius forms are required, 1-inch dressed lumber or plywood may be used. Provide stakes and bracing materials as required to hold forms securely in place.

### 2.02 EXPANSION JOINT FILLER

A. Expansion joint filler shall be ½-inch thick, preformed asphalt-impregnated, expansion joint material conforming to ASTM D 994.

### 2.03 REINFORCEMENT

A. Welded wire fabric shall conform to ASTM A185 and be sized as indicated on the Drawings.

B. Deformed reinforcing bars shall conform to ASTM A615 and be sized as indicated on the Drawings.

1. Grade: 60
2. Minimum yield strength: 60,000 psi

### 2.04 CONCRETE

A. Concrete for sidewalks, drive/roadways and curbs shall be a specified in Section 03300 - Concrete.

## 2.05 CURING COMPOUND

A. Liquid membrane-forming curing compound shall be clear or translucent, suitable for spray application and shall conform to ASTM C 309, Type 1.

# PART 3 EXECUTION

## 3.01 PREPARATION OF SUBGRADE

A. Bring the areas on which sidewalks, drives and curbs are to be constructed to required grade and compact by sprinkling and rolling or mechanical tamping. As depressions occur, refill with suitable material and recompact until the surface is at the proper grade. The upper 12 inches of subgrade or fill shall be compacted to 98 percent of maximum density at optimum moisture content as determined by ASTM D 1557.

## 3.02 SETTING FORMS

A. Construct forms to the shape, lines, grades, and dimensions called for on the Drawings. Stake wood or steel forms securely in place, true to line and grade.

B. Brace forms to prevent change of shape or movement in any direction resulting from the weight of the concrete during placement. Construct short-radius curved forms to exact radius. Tops of forms shall not depart from gradeline more than 1/8 inch when checked with a 10-foot straightedge. Alignment of straight sections shall not vary more than 1/8 inch in 10 feet.

## 3.03 SIDEWALK CONSTRUCTION

A. Sidewalks shall be 4 inches thick except where shown otherwise on the Drawings.

B. At locations where the new sidewalk is to abut existing concrete, saw concrete for a depth of 2 inches and chip the old concrete back to sound material on a straight line, clean the surface, and apply a neat cement paste just prior to pouring the new sidewalk.

C. Place preformed asphalt expansion joints at intervals not exceeding 45 feet and around posts, poles, valve boxes, manholes or other objects protruding through the sidewalk.

D. Provide expansion and contraction joints transversely to the walks at intervals as shown on the drawings. Expansion and contraction joints shall be straight and at right angles to the surface of the walk.

E. Place, process, finish and cure concrete in conformance with the applicable requirements of ACI 614 and this Specification. Where the requirements differ, the high shall govern.

F. Broom the surface with a fine-hair broom at right angles to the length of the walk and tool at all edges, joints and markings. Mark the walks transversely at 5-foot intervals with a jointing tool. Upon completion of the finishing, apply an approved curing compound to exposed surfaces. Protect the sidewalk from damage for a period of 7 days.

## 3.04 DRIVE/ROADWAY CONSTRUCTION

A. Drives/roadways shall be constructed and reinforced as indicated on the Drawings.

B. Place reinforcement as required by Drawings.

C. Place pre-formed expansion joint material where new drive/roadway will abut existing drive/roadway and around valve boxes, manholes or other objects protruding through the drive/roadway.

D. Broom the surface with a fine-hair broom at right angles to the length of the drive/roadway and tool all edges and joints. Upon completion of finishing, apply an approved curing compound to exposed surfaces.

E. Provide saw cut contraction joints as per standard details.

## 3.05 CURB CONSTRUCTION

A. Prepare adjacent, existing curb surfaces as described herein for sidewalk construction.

B. Construct curbs to match existing type as shown on the Drawings.

END OF SECTION

**SECTION 03300**

**CONCRETE**

## PART 1 GENERAL

### 1.01 WORK INCLUDED

A. This section covers all work necessary for providing, testing and placing ready mix concrete.

B. See CONDITIONS OF THE CONTRACT and Division 1, GENERAL REQUIREMENTS, which contain information and requirements which apply to the Work specified herein and are mandatory for this project.

### 1.02 RELATED WORK SPECIFIED ELSEWHERE

A. Section 01400 - Quality Control.

### 1.03 REFERENCE STANDARDS, CODES AND SPECIFICATIONS (AS REFERENCED IN FLORIDA BUILDING CODE))

A. ACI 214 “Guide to Evaluation of Strength Test Results of Concrete”.

B. ACI 318 "Building Code Requirement for Reinforced Concrete".

C. ASTM C31 "Standard Method for Making and Curing Concrete Compressive and Flexure Test Specimens in the Field".

D. ASTM C33 "Standard Specification for Concrete Aggregates".

E. ASTM C94 "Standard Specification for Ready-Mix Concrete".

### 1.04 SUBMITTALS

A. Submittals shall be in accordance with Section 01300 - Submittals and shall include the following:

1. Concrete mix designs and trial mix laboratory reports.
2. Manufacturer's certification of admixtures.
3. Contractor's schedule and sequence of placement.
4. All Test Results.
5. Drawings showing locations of construction joints.

### 1.05 QUALITY ASSURANCE

A. Submit certificates of mill reports on all foreign cements for review by ENGINEER before batching concrete.

B. Secure the services of a reputable manufacturer for counseling regarding the use of any specified admixture.

C. The ENGINEER shall have access to and have the right to inspect all batch plants, cement mills, and supply facilities of suppliers, manufacturers, subcontractors, and contractors providing products included in these Specifications. Batch plants shall have current certification that all weighing scales have been tested and are within the tolerances as set forth in the National Bureau of Standards Handbook No. 44.

**1.06 CERTIFICATION**

A. Submit batch delivery tickets to the ENGINEER in compliance with and in accordance to ASTM C94.

**1.07 TESTING**

A. Performed by an acceptable Engineering Laboratory at OWNER's expense. CONTRACTOR shall assist in the collection of samples. Any retests shall be within the Scope of the Contract.

B. Criteria:

1. Each test: not less than 5 cylinders; retain one after 28 days.
2. One test for every 50 consecutive cubic yards of concrete cast.
3. Furnish ENGINEER with 4 certified copies of tests made of 2 at 7 days and 2 at 28 days.
4. Slump test, concrete temperature and entrained air test shall be completed for each set.

C. Questionable strength of in-place concrete:

1. Additional tests may be ordered by the ENGINEER.
2. Execute the core tests in accordance with ASTM C42 procedure.
3. Costs of additional tests showing strength of in-place concrete conforming to design criteria are the responsibility of the OWNER.
4. Costs of additional tests showing noncompliance with the design criteria are the responsibility of the CONTRACTOR.
5. Additional items at CONTRACTOR's expense:

    a. Provide load tests as directed by the ENGINEER.
    b. Reinforce structure as directed or remove and replace all under strength concrete structure in place.

**PART 2 PRODUCTS**

**2.01 MATERIALS**

A. Cement

1. Portland cement Type I or Type II conforming to ASTM C 150. In addition, the tricalcium aluminate content of Type I cement shall not exceed 12 percent.

2. Type I or Type II cement, at the Contractor's option, may be used for nonhydraulic structures.

3. Type II cement or Type I cement, in combination with pozzolan (fly ash) as hereinafter specified, shall be used for all hydraulic structures and sanitary sewer structures.

B. Water: potable, salt free conforming to ASTM C94.

C. Fine Aggregate (Regular): salt free and clean, conforming to ASTM C33.

Fine Aggregate (Pump): salt free and clean, conforming to FDOT 902.

D. Coarse Aggregate (Regular): salt free and clean, conforming to ASTM C33, maximum size 1 1/2-inch (3/4-inch for water retaining structures).

Coarse Aggregate (Pump): Salt free and clean, size #89, FDOT 901.

E. All aggregates: quarried/mined in fresh water only.

F. Screenings: Screenings meeting the requirements of FDOT 902-5 may be substituted for fine aggregates.

**2.02 MIXES**

A. Fillets, thrust blocks, sidewalks, curbs and miscellaneous non-structural slabs on grade.

1. 28 day compressive strength: 3000 p.s.i.
2. Admixture: As required below, use only specified product.
3. Slump: 5 inches, ± 1 inch.
4. Entrained air content (ASTM C 231): 0 percent.

B. Structural (walls, columns, beams, footings, floor slabs and elevated slabs) and precast concrete:
1. 28 day compressive strength: 4000 p.s.i., minimum, or as illustrated on the Drawings.
   a. Strengths noted on the Drawings take precedence over herein specified amounts.
2. Water-cement ratio: w/c ≤ 0.4.
3. Slump: 5 inches, ± 1 inch.
4. Entrained air Content (ASTM C231): 0 percent.
5. Admixture: As required below, use only specified products.

C. Pavement (Drives/Roadways):

1. 28 day compressive strength: 4000 p.s.i.
2. Water-cement ratio: w/c ≤ 0.5.
3. Slump: 5 inches, ± 1 inch.
4. Entrained air Content (ASTM C231): 0 percent
5. Admixture: As required below, use only specified products.

D. Flowable Fill

1. Cement: 50 to 100 lbs/Cy. (As indicated on drawings.)
2. Pozzolan (Flyash): 0 to 600 lbs/Cy.
3. Fine Aggregate: 2750 lb/Cy.
4. Water: 500 lbs/Cy. (Maximum)

E. Curbs

1. 28 day compressive strength: 3000 psi
2. Slump: 2-inches, ± 1-inch.
3. Entrained Air Content (ASTM C231): 0 percent.
4. Admixtures: As required below, use only specified products.

**2.03 ADMIXTURE**

A. Air-Entraining

1. Provide air-entraining admixture in all concrete. Admixture shall conform to ASTM C 260, except it shall be nontoxic after 30 days

and shall contain no chlorides. Furnish manufacturer's compliance statement for these requirements.

B. Water-Reducing

1. All concrete shall contain a water-reducing admixture. The admixture shall conform to ASTM C 494, Type A or Type D, except it shall contain no chlorides, shall be nontoxic after 30 days, and shall be compatible with the air-entraining admixtures. The amount of admixture added to the concrete shall be in accordance with the manufacturer's recommendations. Furnish a compliance statement that the admixture used satisfies all requirements of this Specification.

C. Pozzolan (Fly-Ash)

1. The pozzolan to be used in combination with Type I cement, as previously specified for use in all hydraulic structures and sewers, shall be Class C or Class F fly ash conforming to ASTM C 618-78 and furnish test data confirming that the fly ash in combination with the cement to be used meets all strength requirements, is compatible with air-entraining agents and other additives, and provides increased sulfate resistance equivalent to or better than Type II cement.

**2.04 CURING COMPOUNDS**

A. Normal placement without special finish; approved products:
1. Master Builders Company: "Masterseal".
2. Sonneborn-Contech: "Kure-N'Seal".

**2.05 DEFORMED REINFORCING BARS**

A. ASTM A615: "Standard Specification for Deformed and Plain Billet-Steel Bars for concrete Reinforcement".
1. Grade: 60
2. Minimum yield strength: 60,000 p.s.i.

B. Sizes shall be as indicated on the Drawings.

**2.06 WELDED WIRE FABRIC**

A. Welded wire fabric shall conform to ASTM A1064.

**2.07 EXPANSION JOINT FILLER**

A. Expansion joint filler shall be 1/2-inch thick, preformed asphalt-impregnated, expansion joint material conforming to ASTM D994.

**2.08 ACCESSORIES**

A. Tie wires shall be 16-gauge, black, soft-annealed wire.

B. Bar supports shall be of proper type for us intended. Bar supports in beams and slabs exposed to view after stripping shall be galvanized or plastic coated. Use concrete supports for reinforcing in concrete placed on grade.

## PART 3 EXECUTION

### 3.01 EXAMINATION

A. Place no concrete until all reinforcing steel, pipes, inserts, sleeves, etc., have been set in place and reviewed by the ENGINEER. Notify the ENGINEER of scheduled pours 24 hours prior to placement.

### 3.02 PLACING

A. Place concrete expeditiously in clean forms that are not hot to the touch; spray forms with water just prior to placing concrete. Before placing concrete directly against earth, install vapor barrier to prevent water absorption, secure reinforcement in position, inspect, and approve before placing concrete. Do not rest runways for transporting concrete on the reinforcing steel. Deposit concrete as nearly as practical in final position; and, do not allow concrete to drop freely more than 5 feet. Place all concrete during daylight, unless otherwise authorized. Where reinforcing steel above the top of the cast is coated with concrete while placing below, remove all concrete from such reinforcing steel after the placing is complete and prior to the next cast.

B. Place slabs-on-grade carefully to avoid damages to the vapor barrier.

### 3.03 CONSOLIDATION

A. Consolidate concrete in layers by internal vibrating equipment, supplemented by hand rodding and tamping as required. Do not use vibrators to move the concrete laterally inside the forms.

B. Maintain internal vibrators at speed of at least 5000 impulses per minute when submerged in concrete. Maintain at least 1 spare vibrator in working condition at site at all times.

C. Limit duration of vibration to time necessary to produce satisfactory consolidation without causing segregation. In no case more than 15 seconds per square foot of exposed surface. Move the vibrator constantly and place in each specific spot only once.

### 3.04 JOINTS

A. Construction joints:

1. Locate as illustrated on the Drawings and as reviewed by the ENGINEER for slabs.
2. Key joints.

B. Expansion Joints: Place pre-formed expansion joints as indicated on the Drawings.

### 3.05 CURING

A. Begin curing of concrete as soon as practicable after placing, but not more than 3 hours thereafter.

B. Begin curing of the structural elements immediately after removal of forms.

C. Apply curing compounds as specified.

**3.06 FINISHES**

A. Formed surfaces:

1. Patching: immediately after stripping forms, patch all defective areas with mortar similar to the concrete mix; but, without coarse aggregate. Patch minor honeycombs, bulges and other minor defects as designed by the ENGINEER, only where exposed to view. Clean, dampen, and fill all the holes with patching mortar.

a. Major defective areas, as judged by the ENGINEER, including those resulting from the leakage of forms, excessive honeycombs, large bulges, and large offsets at form joints: chip away to a depth of at least 1/4 inch; and, the surfaces that are to be patched coat with an epoxy-polysulfide adhesive. Press patching mortar in for a complete bond and finish to match adjacent areas.

b. Minor defective areas, as judged by the ENGINEER, including honeycombs, air bubbles, holes resulting from removal of ties and those resulting from leakage of forms: patch with grout without resorting to chipping. Minor bulges and offsets at form joints: finish as specified herein below.

2. Finishes; locations:

a. Rough or board finish: for all concrete surfaces not exposed to public view.

3. Finishes; definitions:

a. Rough or board finish: reasonably true to line and plane. Tie holes and defects patched, and the fins exceeding 1/4 inch rubbed down, otherwise, surfaces may be left with texture imparted by forms.

B. Unformed surfaces (flatwork):

1. Finishes:

a. General: grade and screed slab to exact elevation, as required. After screeding, tamp mixture thoroughly to drive the coarse aggregate down from surfaces and apply finish specified hereinafter.

b. Light Broom or power trowel finish: slab on grade as noted on drawings.

2. Finishes; definition:

a. Broom finish: finish with light street type broom as soon as surface water sheen has disappeared.

**3.07 FIELD QUALITY CONTROL**

A. Only ready mixed concrete in accordance with ASTM C94 will be accepted.

B. Place all concrete within 1-1/2 hours after introduction of water to mix.

C. Under no circumstances may additional water be added to mix.

D. Discard unused concrete older than 1-1/2 hours. Retempering is prohibited.

END OF SECTION

**SECTION 03600**

**GROUT**

## PART 1 GENERAL

### 1.01 WORK INCLUDED

A. Furnish all materials for grout in accordance with the provisions of this Section and form, mix, place, cure, repair, finish, and do all other work as required to produce finished grout, all in accordance with the requirements of the Contract Documents.

B. The following types of grout shall be covered in this Section:

1. Non-Shrink Grout.
2. Cement Grout.
3. Epoxy Grout.

C. All items specified herein this section may not be specifically required for this project. CONTRACTOR shall coordinate the requirements of this section with the drawings for proper completion of the Work.

D. Like items of materials provided hereunder shall be the end products of one manufacturer in order to achieve standardization for appearance, maintenance, replacement and service.

E. See CONTRACT CONDITIONS and Division 1, GENERAL REQUIREMENTS, for information and requirements which apply to the Work specified in this Section and that are mandatory for this project.

### 1.02 RELATED WORK SPECIFIED ELSEWHERE

A. Section 03300 - Concrete.

### 1.03 REFERENCE SPECIFICATIONS, CODES, AND STANDARDS

A. Specifications, codes, and standards shall be as specified in Section 03300 - Concrete and as referred to herein.

B. Additional Commercial Standards (Latest Revision):

CRD-C 621-82B Corps of Engineers Specifications for Non-shrink grout.

ASTM C 109-80 Standard test methods for compressive strength of hydraulic cement mortars (using 2-in or 50-mm cube specimens).

ASTM C 531-81 Test method for linear shrinkage and coefficient of thermal expansion of chemical-resistant mortars, grouts and monolithic surfacings.

ASTM C 579-82 Test methods for compressive strength of chemical-resistant mortars and monolithic surfacings.

ASTM C 827-82 Standard test method for early volume change of cementitious mixtures.

ASTM C 696-79 Test method for coefficient of linear thermal expansion of plastics.

**1.04 SUBMITTALS**

A. Submit certified test results verifying the compressive strength, shrinkage, and expansion requirements specified herein; and manufacturer's handling, placement and appropriate uses for each type of non-shrink and epoxy grout used in the Work.

**PART 2 PRODUCTS**

**2.01 CEMENT GROUT**

A. Cement Grout: Cement grout shall be composed of one part cement, three parts sand, and the minimum amount of water necessary to obtain the desired consistency. Where needed to match the color of adjacent concrete, white Portland cement shall be blended with regular cement as needed. The minimum compressive strength at 28 days shall be 4000 psi.

B. Cement grout materials shall be as specified in Section 03300 - Concrete.

**2.02 PREPACKAGED GROUTS**

A. Non-Shrink Grout

1. Non-shrink grout shall be a prepackaged, inorganic, non-gas liberating, non-metallic, cement-based grout requiring only the addition of water. Manufacturer's instructions shall be printed on each bag or other container in which the materials are packaged. The specific formulation for each class of non-shrink grout specified herein shall be that recommended by the manufacturer for the particular application.

2. Class A non-shrink grouts shall have a minimum 28 day compressive strength of 5000 psi; shall have no shrinkage (0.0 percent) and a maximum 4.0 percent expansion in the plastic state when tested in accordance with ASTM C-827; and shall have no shrinkage (0.0 percent) and a maximum of 0.2 percent expansion in the hardened state when tested in accordance with CRD C 621.

3. Class B non-shrink grouts shall have a minimum 28 day compressive strength of 5000 psi and shall meet the requirements of CRD C 621.

4. Application
   a. Class A non-shrink grout shall be used for the repair of all holes and defects in concrete members which are water bearing or in contact with soil or other fill material, grouting under all equipment base plates, and at all locations where grout is specified in the Contract Documents; except for those applications for Class B non-shrink grout and epoxy grout specified herein. Class A non-shrink grout may be used in place of Class B non-shrink grout for all applications.

b. Class B non-shrink grout shall be used for the repair of all holes and defects in concrete members which are not water-bearing and not in contact with soil or other fill material, grouting under all base plates for structural steel members, and grouting railing posts in place.

c. Grouting equipment installations.

5. Material shall be Bonsal F77 non-shrink, non-metallic high performance cementitious grout, or equal.

B. Epoxy Grout

1. Epoxy grout shall be a pourable, non-shrink, 100 percent solids system. The epoxy grout system shall have three components: resin, hardener, and specially blended aggregate, all premeasured and prepackaged. The resin component shall not contain any nonreactive diluents. Resins containing butyl glycidyl ether (BGE) or other highly volatile and hazardous reactive diluents are not acceptable. Variation of component ratios is not permitted unless specifically recommended by the manufacturer. Manufacturer's instructions shall be printed on each container in which the materials are packaged.

2. The chemical formulation of the epoxy grout shall be that recommended by the manufacturer for the particular application.

3. The mixed epoxy grout system shall have a minimum working life of 45 minutes at 75 degrees F.

4. The epoxy grout shall develop a compressive strength of 5000 psi in 24 hours and 10,000 psi in seven days when tested in accordance with ASTM C 579, Method B. There shall be no shrinkage (0.0 percent) and a maximum 4.0 percent expansion when tested in accordance with ASTM C 827.

5. The epoxy grout shall exhibit a minimum effective bearing area of 95 percent. This shall be determined by a test consisting of filling a 2-inch diameter by 4-inch high metal cylinder mold covered with a glass plate coated with a release agent. A weight shall be placed on the glass plate. At 24 hours after casting, the weight and plate shall be removed and the area in plan of all voids measured. The surface of the grout shall be probed with a sharp instrument to locate all voids.

6. The peak exotherm of a 2-inch diameter by 4-inch high cylinder shall not exceed 95 degrees F when tested with 75 degree F material at laboratory temperature. The epoxy grout shall exhibit a maximum thermal coefficient of 30 x $10^{-6}$ inches/inch/degree F when tested according to ASTM C 531 or ASTM D 696.

7. Application:

a. Epoxy grout shall be used to embed all anchor bolts and reinforcing steel required to be set in grout and for all other applications required in the Contract Documents.

b. Grouting equipment installations.

8. Material should be Escoweld 7505E/7530, Epoxy grout, or equal.

**2.03 CURING MATERIALS**

A. Curing materials shall be as specified in the Section entitled, 03300 - Concrete, for cement grout and as recommended by the manufacturer of prepackaged grouts.

**2.04 CONSISTENCY**

A. The consistency of grouts shall be that necessary to completely fill the space to be grouted for the particular application. Dry pack consistency is such that the grout is plastic and moldable but will not flow. Where "dry pack" is called for in the Contract Documents, it shall mean a grout of that consistency; the type of grout to be used shall be as specified herein for the particular application.

**2.05 MEASUREMENT OF INGREDIENTS**

A. Measurements for cement grout shall be made accurately by volume using containers. Shovel measurement will not be allowed.

B. Prepackaged grouts shall have ingredients measured by means recommended by the manufacturer.

**PART 3 EXECUTION**

**3.01 GENERAL**

A. All surface preparation, curing, and protection of cement grout shall be as specified in Section 03300 - Concrete. The finish of the grout surface shall match that of the adjacent concrete.

B. The manufacturer of Class A non-shrink grout and epoxy grout shall provide on-site technical assistance upon request.

C. All mixing, surface preparation, handling, placing, consolidation and other means of execution for prepackaged grouts shall be done according to the instructions and recommendations of the manufacturer.

**3.02 CONSOLIDATION**

A. Grout shall be placed in such a manner for the consistency necessary for each application so as to assure that the space to be grouted is completely filled.

END OF SECTION

**SECTION 05500**

**FABRICATED METALWORK AND CASTINGS**

## PART 1 GENERAL

### 1.01 WORK INCLUDED

A. This Section covers the Work necessary to furnish and install, complete, all fabricated metalwork and castings.

B. Like items of materials provided hereunder shall be the end products of one manufacturer in order to achieve standardization for appearance, maintenance, and replacement.

C. All items specified herein this section may not be specifically required for this project. CONTRACTOR shall coordinate the requirements of this section with the drawings for proper completion of the Work.

D. See CONTRACT CONDITIONS and Division 1, GENERAL REQUIREMENTS, which contain information and requirements that apply to the Work specified herein and are mandatory for this project.

### 1.02 RELATED WORK SPECIFIED ELSEWHERE

A. Section 09900 - Protective Coatings.

### 1.03 SUBMITTALS

A. Submittals shall be made in accordance with Section 01300 - Submittals.

B. Submittal data shall include, but not be limited to:

1. Shop drawings, including calculations where required.
2. Test pieces and samples.
3. Certificates, test reports, etc.
4. Color samples of abrasive nosings.

## PART 2 PRODUCTS

### 2.01 GENERAL

A. The use of a manufacturer's name and model or catalog number is for the purpose of establishing the standard of quality and general configuration desired only. Products of other manufacturers will be considered in accordance with GENERAL CONDITIONS.

B. Unless otherwise indicated, all materials shall conform to the latest issue of the following ASTM Specifications:

| Item | ASTM Specification |
|---|---|
| Steel Shapes and Plates | A36, A501 |
| Zinc (Hot Galvanized) Coatings of Fabricated Steel | ASTM A 123 |

| Item | ASTM Specification |
|---|---|
| Stainless Steel | |
| Bars and Shapes | A276, Type 316 |
| Steel Plate, Sheet, and Strip | A167, Type 316 |
| Bolts | A193, Type 316 |
| Nuts | A194, Type 316 |
| Aluminum, Structural Shapes | Alloy 6061-T6; conform to referenced specifications and ASTM sections found in the Aluminum Association current Construction Manual Series |
| Connection Bolts for Steel Members | A325-F |
| Galvanized Bolts | A307, A 153 |
| Connection Bolts for Wood Members | A307 |
| Connection Bolts for Aluminum | A2024-T4, or use appropriate stainless steel |
| Cast Iron | A48, Class 30 |

C. The miscellaneous metalwork and castings indicated on the Drawings, or required to secure the various parts together and provide a complete installation, shall be included under this section. The tabulation of items herein is not intended to be all-inclusive, and it shall be the CONTRACTOR'S responsibility to provide all metalwork and castings shown, specified, or which case reasonably be inferred as necessary to complete the project.

**2.02 STEEL ANCHOR BOLTS (NONSUBMERGED USE)**

A. One-half-inch minimum diameter with hex nuts, or as shown. Bolts and nuts shall be steel as specified hereinbefore.

**2.03 STAINLESS STEEL ANCHOR BOLTS (SUBMERGED USE)**

A. ASTM A193, Type 316 stainless steel anchor bolt, 2-inch minimum diameter with hex nuts, or size as shown.

B. Submerged use is defined as any connection to concrete from point 1 foot 6 inches above the maximum water surface in a water-holding basin and any connection below that point.

**2.04 STAINLESS STEEL FASTENERS LUBRICANT (ANTI-SEIZING)**

A. Where stainless steel nuts and machined bolts, anchor bolts, concrete anchors, and all other threaded fasteners are used, CONTRACTOR shall apply an anti-seizing lubricant to the threads prior to making up the connections. The lubricant shall contain substantial amounts of molybdenum disulfide, graphite, mica, talic, or copper.

## 2.05 MACHINE ANCHOR BOLTS

A. For equipment with motors 3 horsepower or greater, fabricate as shown or as required. Size of fastening stud and anchor bolts as required by equipment manufacturer, stainless.

B. All machine anchor bolts, nuts and washers shall be stainless steel.

## 2.06 ADHESIVE ANCHORS

A. Adhesive anchors shall be Parabond capsule anchors with 316 stainless steel stud, nuts, and washers, as manufactured by Molly Division, 504 Mt. Laurel Avenue, Temple, PA 19560; heavy-duty adhesive anchor with HBP adhesive cartridge and has 316 stainless steel anchor rod assembly as manufactured by Hilti, Inc., PO Box 45400, Tulsa, OK 74145, or equal.

B. Adhesive anchors shall be used for anchoring all metal components at or below a point 1 foot 6 inches above the peak (maximum) water surface elevations in water-holding structures. For embedded anchors refer to stainless steel anchors as hereinbefore specified.

## 2.07 SHELL-TYPE ANCHOR

A. Shell-type anchors shall be self-drilling or non-drilling Red Head anchors as manufactured by the Phillips Drill Company, or equal.

## 2.08 WEDGE ANCHORS

A. Wedge anchors shall be Red Head wedge-type anchors as manufactured by the Phillips Drill Company, Parabolt anchors as manufactured by the Molly Division of Emhart Corporation, or equal.

## 2.09 EXPANSION ANCHORS

A. Stainless steel expansion anchors shall be a pre-assembled heavy duty sleeve style undercut anchor with an internal hex head meeting the requirements of ASTM A276 and A493. The stainless steel components shall be manufactured from Type 303 or 304 stainless steel. Anchors shall be Kwik Bolt II expansion anchors as manufactured by Hilti, Inc., or equal.

## 2.10 MASONRY ANCHORS

A. 3/16" or 1/4" Tapcon or Hilti Kwik-Con II anchors. Head type and embedment per installation requirements.

B. Allowed at locations approved by ENGINEER only.

## 2.11 PIPE SLEEVES

A. ASTM A120 standard weight steel pipe. Where shown, fabricate seepage rings of 1/4-inch steel plate extending 2 inches from pipe and weld continuously to pipe around complete circumference. Galvanize after fabrication. Support pipe sleeves by form work to prevent contact with reinforcing steel. Do not weld reinforcing to pipe sleeves.

## 2.12 STRUCTURAL STEEL COMPONENTS

A. Provide all structural steel components of the sizes, materials and weights shown. All connections shall be welded, unless otherwise shown on the Drawings and as specified herein.

## 2.13 MACHINE BOLTS, INSERTS, AND FASTENERS

A. Machine bolts, inserts, and fasteners permanently embedded in concrete shall be Type 316 stainless steel.

B. Machine bolts, inserts, and fasteners not permanently embedded in concrete, but located outdoors in well wet floors, walls, and ceilings; chemical handling areas; equipment rooms subject to drainage, leakage, and washdown; and in galleries and trenches, shall be Type 316 stainless steel.

C. Machine bolts, inserts, and fasteners not permanently embedded in concrete, but located indoors where washdown, leakage, and drainage are not likely to occur (e.g., in personnel buildings excluding laboratories, on motor floors, in electrical equipment rooms, and in control rooms), may be galvanized steel, ASTM A 153.

## 2.14 NEOPRENE GASKET

A. Unless otherwise indicated, Rubatex No. R-411-N, (ASTM D 1056-RE-41-E), soft, closed-cell, neoprene gasket material, as manufactured by Rubatex Division of Great American Industries, Bedford, VA; equivalent as manufactured by Garlock Manufacturing, San Francisco, CA; or equal. The material shall be suitable for exposure to chlorine, lime and other chemicals typically used in water treatment. Thickness shall be as indicated, but in no case less than 1/4-inch. Gaskets shall be furnished without skin coat on either side. Provided two spare gaskets for each location shown requiring neoprene gaskets.

# PART 3 EXECUTION

## 3.01 GENERAL

A. Workmanship and finish of all metalwork specified under this section shall be the highest grade and equal to the best practice of modern shops for the respective work. Exposed surfaces shall have smooth finish and sharp, well-defined lines. Provide all necessary rabbets, lugs, and brackets to that the work can be assembled in a neat, substantial manner. Conceal fastenings where practical. Drill metalwork and countersink holes as required for attaching hardware or other materials. Fabricate materials as specified weld connections, except where bolting is directed. Items requiring special fabrication methods are mentioned herein. Fabrication of all other items shall be of equal quality. Methods of fabrication not otherwise specified or shown shall be adequate for the stresses and as directed by the ENGINEER.

B. Grind all exposed edges of welds smooth on walkways, guardrails, hand-rails, stairways, channel door frames, steel column bases, and where indicated on the Drawings. All sharp edges shall be rounded to a 1/8-

inch minimum radius; all burrs, jagged edges, and surface defects shall be ground smooth.

C. Welds and adjacent areas shall be prepared such that there is (1) no undercutting or reverse ridges on the weld bead, (2) no weld spatter on or adjacent to the weld or any other area to be painted, and (3) no sharp peaks or ridges along the weld bead. All embedded pieces of electrode or wire shall be ground flush with the adjacent surface of the weld bead.

D. Aluminum: Fabricate aluminum as shown, and in accordance with the Aluminum Association Standards and the manufacturer's recommendations as reviewed. Grind smooth sheared edges exposed in the finished work.

**3.02 WELDING**

A. The technique or welding employed, appearance, quality of welds made, and the methods of correcting defective Work shall conform to codes for Arc and Gas Welding in Building Construction of the AWS and AISC. Surfaces to be welded shall be free from loose scale, rust, grease, paint, and other foreign material, except that mill scale which will withstand vigorous wire brushing may remain. A light film of linseed oil may likewise be disregarded. No welding shall be done when the temperature of the base metal is lower than zero degrees F. Finished members shall be true to line and free from twists.

B. All welding operators shall be qualified in accordance with the requirements of current AWS Standard Qualification Procedure D1.1, Chapter 5, and welders of structural and reinforcing steel shall be certified for all positions of welding in accordance with such procedure. Qualification tests shall be run by a recognized testing laboratory at the CONTRACTOR'S expense.

C. All welding operators shall be subject to examination for requalification using the equipment, materials, and electrodes employed in the execution of the Contract Work. Such requalification, if ordered by the ENGINEER, shall be done at the expense of the CONTRACTOR.

D. Aluminum: Aluminum shall be welded with Gas Metal Arc (MIG) or Gas Tungsten Arc (TIG) processes in accordance with the manufacturer's recommendations as approved, and in accordance with the recommendations of the American Welding Society contained in the Welding Handbook, as last revised. Grind smooth all exposed aluminum welds.

**3.03 INSTALLATION OF FABRICATED METALWORK**

A. Install in accordance with the shop drawings, the Drawings, and these Specifications. Perform field welding and erection work by skilled mechanics. Install fabricated metalwork plumb or level as applicable. The completed installations shall, in all cases, be rigid, substantial, and neat in appearance. Erect structural steel in accordance with the applicable portions of AISC Code of Standard Practice, except as modified. Install commercially manufactured products in accordance with manufacturer's recommendations as approved.

B. Aluminum: Erection of aluminum shall be in accordance with the Aluminum Association. Mill markings shall not be removed from

concealed surfaces. Exposed surfaces not otherwise coated shall have the inked or painted identification marks removed after the material has been inspected and approved by the ENGINEER.

**3.04 ANCHOR BOLTS**

A. All anchor bolts shall be accurately located and held in place with templates at the time the concrete is poured.

**3.05 GALVANIZING AND REPAIR**

A. Galvanizing of steel plates, shapes, bars (and products fabricated from these items), and strip 1/8-inch thick or thicker, shall conform to ASTM A123. Pipe, welded or seamless steel, shall conform to ASTM A120. Material thinner than 1/8 inch shall either be galvanized before fabrication in conformance with the requirements of ASTM A 525, Coating Designation G 1`0; after fabrication, in conformance with the requirements of ASTM A 123, except that the weight of zinc coating shall average not less than 1.2 ounces per square foot of actual surface area with no individual specimen having a weight of less than 1.0 ounce. Unless otherwise provided, galvanizing shall be done before or after fabrication, for material which is thinner than 1/8 inch, at the option of the CONTRACTOR. Galvanizing will not be required for stainless steel, monel metal, and similar corrosion-resistant parts.

B. In like manner, galvanizing of iron and steel hardware, and nuts and bolts, shall conform to ASTM A 153. Galvanizing shall be performed after fabrication. Galvanizing of tapped holes will not be required.

C. Fabrication shall include all operations such as shearing, cutting, punching, forming, drilling, milling, bending, welding, and riveting.

D. Components of bolted assemblies shall be galvanized separately before assembly.

E. The minimum pitch diameter of the threaded portion of all bolts, anchor bars, or studs shall conform to ANSI B1.1, having a Class 2A tolerance before galvanizing. After galvanizing, the pit diameter of the nuts or other internally threaded parts may be tapped over ANSI B1.1, Class 2B tolerance, by the following maximum amounts:

| | |
|---|---|
| 3/8-inch through 9/16-inch | 0.016-inch oversize |
| 5/8-inch through 1-inch | 0.023-inch oversize |
| 1-1/8-inch and larger | 0.033-inch oversize |

F. Galvanized surfaces which are specifically to be painted shall not be chemically treated after galvanizing, and prior to cleaning and painting.

G. Except for inlet grates not otherwise required to be welded, all edges of tightly contacting surfaces, where galvanized is required, shall be completely sealed by welding before galvanizing.

H. Galvanized surfaces that are abraded or damaged at any time after the application of the zinc coating shall be repaired by SP 1) and hand or power tool (Steel Structures Painting Council SP 1 or SP 3) the damaged areas, removing all loose and cracked coating after which the cleaned areas shall be painted with one of the following coatings:

1. One coat of Inorganic Zinc Silicate (MIL-P-23236, Class 3).
2. Two coats of Galvanizing Repair Paint (MIL-P-21035).
3. Two coats of Zinc Dust Paint (MIL-E-15145, Formula 102).

I. Paint should be applied to a cleaned surface. Abrasive blasting is required for inorganic zinc silicate.

**3.06 ELECTROLYTIC PROTECTION**

A. Aluminum in contact with or embedded in concrete shall be provided with an electrolysis protective material. The protective material shall be applied to the aluminum surface which will be in contact with the dissimilar material. Protective system shall be System No. 27 as specified in Section 09900 - Protective Coatings.

B. Aluminum in contact with steel shall be provided with an electrolysis protective material. The protective material shall be neoprene gasket as specified herein.

**3.07 PAINTING**

A. Thoroughly clean all ferrous metal items not galvanized and give a shop coat of metal primer. Preparation of surfaces and application of primer shall be in accordance with the paint manufacturer's printed directions and recommendations as reviewed and in accordance with Section 09900 - Protective Coatings, utilizing the appropriate painting system.

**3.08 PREPARATION FOR SHIPMENT**

A. Insofar as is practical, the items provided hereunder shall be factory assembled. The parts and assemblies that are of necessity shipped unassembled, shall be packaged and clearly tagged in a manner that will protect the materials from damage, and facilitate the identification and final assembly in the field.

END OF SECTION

**SECTION 07900**

**SEALANTS**

## PART 1 GENERAL

### 1.01 WORK INCLUDED

A. This Section covers the work necessary to furnish all labor, materials and equipment required to provide all joint sealants as shown on the drawings and specified herein.

B. All items specified herein this section may not be specifically required for this project. CONTRACTOR shall coordinate the requirements of this section with the drawings for proper completion of the Work.

C. See CONTRACT CONDITIONS and Division 1, GENERAL REQUIREMENTS, which contain information and requirements that apply to the Work specified herein and are mandatory for this project.

### 1.02 RELATED WORK SPECIFIED ELSEWHERE

A. Section 09900 - Protective Coatings.

### 1.03 SUBMITTAL

A. Submittals shall be made in accordance with the requirements of Section 01300 - Submittals. In addition, the following specific information shall be submitted:

1. Manufacturer's product data.
2. Submit small sample of materials proposed for use showing color specified. Samples shall be accompanied by Certificate of Compliance with applicable reference standards.
3. Submit applicator's Affidavit of Qualification Compliance.

### 1.04 DELIVERY, STORAGE AND HANDLING

A. Deliver all sealants to jobsite in sealed containers, each bearing manufacturer's name and product description.

B. Provide for storage of sealant materials as recommended by manufacturer.

### 1.05 PROJECT CONDITIONS

A. The ambient temperature shall be 40E to 100EF, when a sealant is applied.

B. Allow sealants a minimum curing time of one (1) week prior to total water immersion.

### 1.06 SEQUENCING AND SCHEDULING

A. Schedule sealant installation to coincide and expedite work specified in Section 09900 - Protective Coatings.

## PART 2 PRODUCTS

### 2.01 GENERAL

A. Sealants shall be approved for use in contact with potable water where required by specific application.

### 2.02 SINGLE COMPONENT SEALANT

A. Sealant shall be one-part polyurethane conforming to Federal Specification TT-S-00230C and ASTM C-920, Type II Class A, Non-Sag Elastomeric Sealant.

B. Color shall be selected from manufacturer’s standards to match color of adjacent surfaces, where applicable.

C. Sealant shall be Sikaflex-1A as manufactured by Sika or equal.

### 2.03 TWO COMPONENT SEALANT

A. Sealant shall be two-component, premium grade, polyurethane-based, conforming to Federal Specification TT-S-00227E and ASTM C-920, Non-Sag (NS) or self-leveling (SL) Elastomeric Sealant.

B. Color shall be selected from manufacturer’s standards to match color of adjacent surfaces, where applicable.

C. Sealant shall be Sikaflex-2C, NS/SL as manufactured by Sika or equal.

### 2.04 JOINT BACKING (BACKER ROD)

A. Closed-cell polyethylene foam rod conforming to ASTM D1751 and compatible to specified sealant. Size and use shall be as recommended by manufacturer.

### 2.05 PRIMER

A. Material shall be as recommended by sealant manufacturer where required for adhesion of sealant to joint substrate, as applicable.

### 2.06 BOND BREAKER

A. Bond breaker shall be polyethylene tape or other plastic tape as recommended by sealant manufacturer for preventing bond between sealant to back (3rd) surface of joint substrate or joint backing.

## PART 3 EXECUTION

### 3.01 PREPARATION

A. Elastomeric sealants shall be applied in accordance with ASTM C962.

B. All surfaces to be sealed shall be clean, dry, sound and free of dust, loose mortar and all other foreign material.

## 3.02 INSTALLATION

A. Apply sealant materials, bond breaker and primer in strict compliance with the manufacturer's printed instructions as applicable to products and indicated applications.

## 3.03 CLEANUP

A. Surfaces adjacent to sealed joints shall be cleaned of smears, excess sealant materials or other soiling resulting from the sealing application. At no additional cost to OWNER, replace or repair to OWNER's satisfaction any damaged surfaces resulting from sealing.

END OF SECTION

**SECTION 09900**

**PROTECTIVE COATINGS**

## PART 1 GENERAL

### 1.01 WORK INCLUDED

A. This Section covers the work required to provide all labor, materials, equipment and incidentals to perform all of the necessary surface preparation and painting required to complete this contract in its entirety.

B. It is the intent of this specification to paint all concrete exposed miscellaneous ferrous metals, pipes, fittings, valves, equipment and all other work obviously required to be painted unless otherwise specified. Minor items omitted in the schedule of Work shall be included in the Work of this Section where they come within the general intent of the Specifications as stated herein.

C. The following surfaces or items are not required to be painted:

1. Aluminum: gratings, checkered plates, hatches, handrails, toeboards, stairways and walkways (except as required for electrolytic protection).

2. Stainless Steel, brass and bronze.

3. Piping buried in the ground or embedded in concrete.

4. Ducts, pipes and other miscellaneous items covered with insulation or plastic coated.

5. Concealed surfaces of pipe and crawl spaces.

6. Finish hardware.

7. Nonferrous architectural metals, unless specifically noted otherwise.

8. Packing glands and other adjustable parts and nameplates of mechanical equipment.

9. All manufactured painted electrical equipment (switchgear, transformers, motor control centers, control panels, etc.).

D. All items specified herein this section may not be specifically required for this project. CONTRACTOR shall coordinate the requirements of this section with the drawings for proper completion of the Work.

E. Like items of materials provided hereunder shall be the end products of one manufacturer in order to achieve standardization for appearance, maintenance, replacement and service.

F. See CONTRACT CONDITIONS and Division 1, General Requirements, which contain information and requirements that apply to the Work specified herein and are mandatory for this project.

## 1.02 RELATED WORK SPECIFIED ELSEWHERE

1. Section 07900 - Sealants.

2. Finish Schedules on Drawings.

## 1.03 ABBREVIATIONS

A. The abbreviations and definitions listed below, when used in this Section shall have the following meanings:

| | |
|---|---|
| ANSI | American National Standards Institute |
| ASTM | American Society of Testing Materials |
| AWWA | American Water Works Association |
| DFT | Dry Film Thickness |
| FRP | Fiberglass Reinforced Plastic |
| HCL | Hydrochloric Acid |
| MDFT | Minimum Dry Film Thickness |
| MDFTPC | Minimum Dry Film Thickness Per Coat |
| mil | Thousandths of an Inch |
| MIL-P | Military Specification - Paint |
| NACE | National Association of Corrosion Engineers |
| NSF | National Sanitary Foundation |
| OSHA | Occupational Safety and Health Administration |
| SFPG | Square Feet Per Gallon |
| SFPGPC | Square Feet Per Gallon Per Coat |
| SP | Surface Preparation |
| SSPC | Steel Structures Painting Council |

## 1.04 SUBMITTALS

A. Submittals shall be made in accordance with the requirements specified in Section 01300 - Submittals.

B. Submittals will be made with the coating system data sheet included at the end of this section.

C. The following shall be submitted for each proposed coating system: manufacturer's specifications, surface preparation details, application procedures, technical data sheets and dry film thickness or coverage.

D. Schedule of Painting Operations: The CONTRACTOR shall include a complete Schedule of Painting Operations with the overall project schedule.

## 1.05 QUALITY ASSURANCE

A. The paint manufacturer shall provide a representative to visit the jobsite at intervals during surface preparation and painting as may be required for product application quality assurance and to determine compliance with Manufacturer's instructions and these Specifications, and as may be necessary to resolve field problems attributable to, or associated with, the manufacturer's products furnished under this Contract.

## 1.06 INSPECTION

A. The CONTRACTOR shall give the ENGINEER a minimum of three (3) days advance notice of the completion of any surface preparation work or start of coating application work.

B. Before application of the base (prime) coat and each succeeding coat, all surfaces to be painted shall be inspected by ENGINEER. Any and all defects or deficiencies shall be corrected by the CONTRACTOR before application of any subsequent coating.

C. Coating applications shall be checked for required MDFT as per these specifications. All coated surfaces failing to meet the MDFT requirements shall be rejected.

D. For all coatings subject to immersion, consult the coatings manufacturer's written instructions for time required after system application before immersion.

E. Inspection by the ENGINEER or the waiver of inspection of any particular portion of the Work shall not be construed to relieve the CONTRACTOR of his responsibility to perform the Work in accordance with these Specifications.

F. All equipment required for discontinuity (Holiday) testing of steel substrates and continuity verification of concrete substrates shall be furnished and operated by the painting contractor.

## 1.07 PAINT DELIVERY AND STORAGE

A. All materials shall be new and shall be delivered to the project site in unopened containers that plainly show, at the time of use, the designated name, date of manufacture, color, and name of manufacturer. Paints shall be stored in a suitable protected area that is heated or cooled as required to maintain temperatures within the range recommended by the paint manufacturer.

B. All paint or other such regulated substances stored on site by CONTRACTOR shall be done so in accordance with the rules and regulations of the Florida Department of Environmental Protection regarding secondary containment and the Broward County Department of Planning and Environmental Protection.

## 1.08 PROJECT SITE CONDITIONS

A. The location of this project requires observance and conformance with EPA Volatile Organic Compound (VOC) restrictions. EPA limits the content of VOC's in painting materials to 3.5 lbs./gallon. Information regarding the VOC content of proposed paints will be required during submittals.

## 1.09 WARRANTY

A. CONTRACTOR shall warrant to the OWNER and guarantee the work under this Section against defective workmanship and materials for a period of two (2) years commencing on the final contract date of final acceptance of the project.

B. Warranties shall be submitted in accordance with Section 01740-Warranties and Bonds.

**PART 2 PRODUCTS**

**2.01 GENERAL**

A. All products used in immersion service or in contact with potable water shall be ANSI/NSF certified for use in contact with potable water.

B. Products containing lead will not be allowed. Oil shall be pure boiled linseed oil.

**2.02 PAINT MATERIALS**

A. Products shall be manufactured by Tnemec Company, Inc., Carboline, BASF, Xypex Chemical Corporation, C.I.M. Industries, Inc., or equal.

B. The following paint products are used for the basis of establishing the desired quality expected for the project.

| PRODUCT TYPE | TNEMEC COMPANY, INC. PRODUCT NAME | CARBOLINE PRODUCT NAME |
|---|---|---|
| Epoxy (Non-Potable) | Series 66 Hi-Build Epoxoline | Carboguard 890 |
| Epoxy (Potable) | Series N140 Pota-Pox Plus | Carboguard 891HS |
| Polyurethane | Series 73 Endura-Shield | Carbothane 134HG |
| Acrylic Emulsion (Low Gloss) | Series 6 Tneme-Cryl | Sanitile 155 |
| Water Borne Acrylic Epoxy (Semi Gloss) | Series 113 H.B. Tneme-Tufcoat | Sanitile 255 |
| Epoxy Waterborne Cementitious Acrylic | Series 130-6602 Envirofill | Sanitile 100 |
| Epoxy Mastic | Series 135 Chembuild | Carbomastic 615 |
| Acrylic Polymer (Semi-Gloss) | Series 1028 Enduratone | Carbocrylic 3359 |
| Waterborne Acrylic Bonding Primer | | Carbocylic 120 |
| Polyamine Epoxy (Primer) | Series 201 Epoxoprime | Semstone 110 |
| Polyamidoamine Epoxy (Non-Potable) | Series N69 Hi-Build Epoxoline II | Carboguard 890 |
| Polyamide Epoxy Coal Tar | 46H-413 Hi-Build Tneme-Tar | Bitumastic 300M |

| PRODUCT TYPE | TNEMEC COMPANY, INC. PRODUCT NAME | CARBOLINE PRODUCT NAME |
|---|---|---|
| Polyamine Novolac Epoxy | Series 282 Tneme-Glaze | Semstone 145 or 145SL (Floors) |
| Epoxy Block Filler | Series 1254 Epoxoblock WB | Sanitile 600 |
| Colored Quartz-Filled Modified Polyamine Epoxy | Series 222 Deco-Tread | Sanitile 920 |
| Modified Polyamine Epoxy | Series 284 Deco-Clear | Sanitile 922 (Clear) |
| Aliphatic Polyester Polyurethane | Series 295 Clear CRU | Sanitile 865 |
| Epoxy Modified Cementitious Mortar | Series 218 MortarClad | Carboguard 510 or 510SG |
| Fiber Reinforced Epoxy | Series 270 Stranlok | Semstone 145 |
| Waterborne Epoxy-Amine Adduct (Floor) | Series 287 Enviro-Tread | Carboguard 655 |
| Aliphatic Polyester Polyurethane (Floor) | Series 290 CRU | Carbothane 133HB |
| Glass Bead Additive | Series 211-212 Glass Beads | Contact Supplier |
| Cycloaliphatic Amine Epoxy | Series 104 H.S. Epoxy | Carboguard 890 |
| Modified Amine Epoxy (Trowel Grade) | Series 215 Surfacing Epoxy or 510 | Carboguard 501 |
| Modified Polyamine Epoxy (Surfacer) | Series 215 Surfacing Epoxy | Carboguard 501, 510 or 510SG |
| Epoxy Mortar | Series 237 Power-Tread | CarboGuard 510 or 510SG |

| PRODUCT TYPE | BASF PRODUCT NAME |
|---|---|
| Cementitious Coating | Thoroseal |

| PRODUCT TYPE | XYPEX CHEMICAL CORP. PRODUCT NAME |
|---|---|
| Crystaline Waterproofing (Concentrate) | Xypex Concentrate |
| Crystaline Waterproofing (Modified) | Xypex Modified |

| PRODUCT TYPE | C.I.M. Industries, Inc.<br>PRODUCT NAME |
|---|---|
| Epoxy Primer (Special) | CIM 61BG |
| Trowel Grade Liner | CIM 1061 |

**2.03 EXTRA PAINT**

A. Furnish one (1) unopened container of each type and each color of paint used, properly marked for future use by OWNER. Minimum size of one (1) gallon.

**2.04 PIPE IDENTIFICATION LABELS**

A. Piping systems larger than 1" diameter

1. Stick-on pipe labels shall be durable self-adhesive vinyl, meeting ANSI A13.1 for background color and lettering height as follows:

| Pipe Diameter | Letter Height |
|---|---|
| 1" to 2-1/2" | 3/4" |
| 2-5/8" to 6" | 1-1/4" |
| 8" and above | 2-1/2" |

2. Custom flow stream identification color and text shall be provided per the flow stream requirements noted on the drawings.

3. Flow detection arrow(s) shall be incorporated with each custom label. Above 6" diameter pipe flow arrows shall be provided around pipe circumference.

4. Labels for color code painted pipe shall have a clear background with black letters and flow direction arrows.

5. Stick-on pipe labels shall be as provided by Brady, Craftmark, Seton, or equal.

B. Piping systems 1" diameter and smaller

1. Labels shall be reusable plastic snap-on markers as manufactured by Brady, Craftmark, Seton, or equal.

2. Custom flow stream identification text with flow direction arrow shall be provided per the flow stream requirements noted on the drawings.

C. Piping Systems Larger Than 3" Diameter (Alternative)

1. Black stencil painted letters, all capitals meeting the following heights:

| Pipe Diameter | Letter Height |
|---|---|
| 4" to 10" | 1-1/4" |
| 12" and above | 2-1/2" |

2. Paint for stenciling shall be black, same top coat as the specified coating system.

3. Flow direction arrows shall also be included.

## PART 3 EXECUTION

### 3.01 PROTECTION OF SURFACES NOT TO BE PAINTED

A. Mask or otherwise protect hardware, lighting fixtures, switch plates, aluminum surfaces, machined surfaces, couplings, shafts, bearings, nameplates and all other surfaces not intended to be painted which cannot be removed.

B. Provide drop cloths to prevent paint materials from falling on or marring adjacent surfaces.

C. Protect working parts of mechanical and electrical equipment from damage during surface preparation and painting processes. Openings in motors shall be masked to prevent paint and other materials from entering motors.

D. Protection of Existing Structures, Residences, or Vehicles

1. CONTRACTOR shall provide screens or other such means to prevent splatter of concrete, paint or other such substance from staining or damaging the nearby existing structures, residences or vehicles.

2. CONTRACTOR shall be responsible for cleaning and repairing all damages caused by overspray.

### 3.02 ENVIRONMENTAL CONDITIONS

A. Paint shall not be applied in temperatures exceeding the manufacturer's recommended maximum and minimum allowable, nor under adverse conditions such as dust, smoke-laden atmosphere, damp or humid weather.

### 3.03 SAFETY

A. Painting shall be performed in strict accordance with the safety recommendations of the paint manufacturer; with the safety recommendations of the National Association of Corrosion Engineers contained in the publication, Manual for Painter Safety; Federal, State, and local agencies having jurisdiction.

B. Ultimate responsibility for safety is the CONTRACTOR's.

### 3.04 PREPARATION OF FERROUS METAL SURFACES

A. All surfaces to be coated shall be prepared as specified herein and shall be dry and clean before coating. Specific surface preparation shall be specified for the individual coating systems.

B. Standards for Ferrous Metal Surfaces Preparation

1. SSPC-SP-1 Chemical and/or Solvent Cleaning

Remove all grease, oil, salt, acid, alkali, dirt, dust, wax, fat, foreign matter and contaminates, etc. by one of the following methods: steam cleaning, alkaline cleaning, or volatile solvent cleaning.

2. SSPC-SP-2 Hand Tool Cleaning

Removal of loose rust, loose mill scale and loose paint to a clean sound substrate by hand chipping, scraping, sanding and wire brushing.

3. SSPC-SP-3 Power Tool Cleaning

Removal of loose rust, loose mill scale and loose paint to a clean sound substrate by power tool chipping, descaling, sanding, wire brushing and grinding.

4. SSPC-SP-4 Flame Cleaning

Dehydrating and removal of rust, loose mill scale and some light mill scale by use of flame, followed by wire brushing.

5. SSPC-SP-5 (NACE-1) White Metal Blast Cleaning

Complete removal of all mill scale, rust scale, previous coating, etc., leaving the surface a uniform gray-white color.

6. SSPC-SP-6 (NACE-3) Commercial Grade Blast Cleaning

Complete removal of all dirt, rust scale, mill scale, foreign matter and previous coating, etc., leaving only shadows and/or streaks caused by rust stain and mill scale oxides. At least 66% of each square inch of surface area is to be free of all visible residues, except slight discoloration.

7. SSPC-SP-7 (NACE-4) Brush-Off Blast Cleaning

Removal of rust scale, loose mill scale, loose rust and loose coatings, leaving tightly-bonded mill scale, rust and previous coatings. On concrete surfaces, brush-off blast cleaning shall remove all laitance, form oils and solid contaminates. Blasting should be performed sufficiently close to the surface so as to open up surface voids, bugholes, air pockets and other subsurface irregularities, but so as not to expose underlying aggregate.

8. SSPC-SP-8 Pickling

Complete removal of rust and mill scale by acid pickling, duplex pickling or electrolytic pickling (may reduce the resistance of the surface to corrosion, if not to be primed immediately).

9. SSPC-SP-10 (NACE-2) Near-White Metal Blast Cleaning

Removal of all rust scale, mill scale, previous coating, etc., leaving only light stains from rust, mill scale and small specks of previous coating. At least 95% of each square inch of surface area is to be free of all visible residues, and the remainder shall be limited to slight discoloration.

10. SSPC-SP-11-87 Power Tool Cleaning to Bare Metal

    Complete removal of rust, rust scale, mill scale, foreign matter and previous coatings, etc. to a standard as specified on a Commercial Grade Blast Cleaning (SSPC-SP-6, NACE-3) by means of power tools that will provide the proper degree of cleaning and surface profile.

C. Ferrous metal shall be blasted unless otherwise specified. Blasting shall be done with a centrifugal wheel or compressed air blasting equipment, using proper abrasives to attain an average profile depth of 1.5 mils. Do not reuse sand or flint abrasives. Shot abrasives must be thoroughly clean of contamination before reuse. Blow dust and grit from surface with clean, dry air. Coat within 8 hours or before rust contamination occurs.

D. Shop-Finished Surfaces: All shop-coated surfaces shall be protected from damage and corrosion before and after installation by treating damaged areas immediately upon detection. Abraded or corroded spots on shop-coated surfaces shall be prepared in accordance with SSPC-SP2 (Hand Tool Cleaning) and then touched up with the same materials as the shop coat. All shop coated surfaces which are faded, discolored, or which require more than minor touch-up in the opinion of the ENGINEER shall be repainted. Cut edges of galvanized sheets and exposed threads and cut ends of galvanized piping, electrical conduit, and metal pipe sleeves, not to be finished painted, shall be cleaned in accordance with SSPC-SP1 (Solvent Cleaned) and primed with zinc dust-zinc oxide metal primer.

E. Pre-Blast Cleaning Requirements

All oil, grease, welding fluxes, and other surface contaminants shall be removed prior to blast cleaning. Preblast cleaning methods shall use steam, open flame, hot water, or cold water with appropriate detergent additives followed with clean water rinsing.

Small isolated areas shall be cleaned as above or solvent cleaned with suitable solvents and clean cloths.

All sharp edges shall be rounded or chamfered and all burrs, jagged edges, and surface defects shall be ground smooth.

Welds and adjacent areas shall be prepared such that there is: (1) no undercutting or reverse ridges on the weld bead, (2) no weld spatter on or adjacent to the weld or any other area to be painted and (3) no sharp peaks or ridges along the weld bead. All embedded pieces of electrode or wire shall be ground flush with the adjacent surface of the weld bead.

**3.05 PREPARATION OF CONCRETE AND MASONRY SURFACES**

1. All surfaces to be coated shall be prepared as specified herein and shall be dry and clean before coating. Specific surface preparation shall be specified for the individual coating systems.

2. Standards for concrete/masonry surface preparation shall be as defined and specified by guideline No. 03732 (latest revision) as published by the International Concrete Repair Institute.

3. Concrete and masonry surfaces shall be prepared in accordance with the International Concrete Repair Institute Guideline No. 03732 to provide the specified Concrete Surface Profile CSP 2 - CSP 9, and the recommendations of the repair, coating and lining manufacturer. According to ICRI, surface preparation methods that may result in a CSP 1 - CSP 9, include acid etching, detergent scrubbing, low-pressure water blasting, abrasive (sand) blasting, and high and ultra high pressure water jetting.

   Concrete and masonry surface preparation method shall be as selected by CONTRACTOR to meet the specified concrete surface profile requirement and the other specified surface preparation requirements.

4. The Concrete Surface Profile (CSP) requirements shall be as follows:
   1. ICRI CSP 1 - Acid Etched.
   2. ICRI CSP 2 - Grinding.
   3. ICRI CSP 3 - Light Shot Blast.
   4. ICRI CSP 4 - Light Scarification.
   5. ICRI CSP 5 - Medium Shot Blast.
   6. ICRI CSP 6 - Medium Scarification.
   7. ICRI CSP 7 - Heavy Abrasive Blast.
   8. ICRI CSP 8 - Scabbled.
   9. ICRI CSP 9 - Heavy Scarification.

   **These classifications are to be used to determine depth of surface profile and are not intended to dictate surface preparation method to be employed.**

**3.06 PREPARATION OF EXISTING COATED SURFACES**

A. Existing coated surfaces to be painted shall be detergent washed and fresh water rinsed. Loose, abraded, or damaged coatings shall be cleaned to substrate by SSPC-SP2 (Hand Tool Cleaning) or SSPC-SP3 (Power Tool Cleaning). Surrounding intact coating shall be feathered. One spot coat of the specified primer shall be applied to bare areas overlapping the prepared existing coating. One full finish coat of the specified material shall be applied overall.

B. The exact nature of the existing coatings is not known in all cases; and, while it is assumed that they have oxidized sufficiently to prevent lifting or peeling when overcoated with the paints specified, the compatibility shall be checked by application to a small area prior to starting the painting. If lifting or other problems occur, request instructions from the ENGINEER.

**3.07 SHOP PAINTING**

A. All fabricated steel work and equipment shall receive at the factory at least one shop coat of prime paint compatible with the paint system required by these Specifications. Surface preparation prior to shop painting shall be as specified. Finish coats may be applied in the shop if acceptable to the ENGINEER. All shop painted items shall be properly packaged and stored until they are incorporated in the Work. Any painted surfaces that are damaged during handling, transporting,

storage or installation shall be cleaned, scraped and patched before field painting begins. Work shall be equal to the original painting received at the shop. Equipment or steel work that is to be assembled on the site shall likewise receive a minimum of one shop coat of paint at the factory. Surfaces of exposed members that will be inaccessible after erection shall be prepared and painted before erection.

B. The CONTRACTOR shall specify the shop paints to be applied when ordering equipment in order to assure compatibility of shop paints with field paints. The paints and surface preparation used for shop coating shall be identified on shop drawings submitted to the ENGINEER for review.

C. Shop finish coats may be the standard finish as ordinarily applied by the manufacturer if it can be demonstrated to the ENGINEER that the paint system is equal to and compatible with the paint system specified. However, all pumps, motors, valves, pipe and other equipment shall receive at least one field applied finish coat after installation.

## 3.08 COATING SYSTEM INDEX

A. The following is a general index to the Coating System descriptions contained herein:

| SYSTEM NUMBER | TITLE |
|---|---|
| 1E | Submerged Metal - Potable Water (Existing/Shop Primed) |
| 4E | Exposed Metal (Existing/Shop Primed) - Highly Corrosive |
| 7E | Interior Metal (Existing/Shop Primed) - Highly Corrosive. |
| 23E | Chemical Resistant Wall (Concrete and Masonry) - Existing |
| 24 | Exposed FRP, PVC |
| 24E | Exposed FRP, PVC (Existing) |
| 25 | Interior FRP, PVC |
| 25E | Interior FRP, PVC (Existing) |
| 27 | Aluminum and Dissimilar Metal Insulation |
| 109E | Existing Interior Concrete and Masonry |
| 111E | Existing Exterior Stucco Cementitious Coating (Flat) |

## 3.09 COATING SYSTEMS

A. **System No. 1E - Submerged Metal-Potable Water (Existing/Shop Primed)**

| | |
|---|---|
| Surface Preparation: | Abrasive blast clean steel to an SSPC-SP10 (near white metal blast). |
| Prime Coat: | Epoxy (Potable) 6.0 - 8.0 mils DFT. |
| Stripe Coat: | Epoxy (Potable) 4.0 - 6.0 mils DFT at all weld seams, flanges and edges. |
| Top Coat: | Epoxy (Potable) at 6.0 - 8.0 mills DFT. |
| MDFT: | 14 mils for the two (2) coat system. |
| Color: | White. |

**B. System No. 4E - Exposed Metal (Existing/Shop Primed) – Highly Corrosive.**

| | |
|---|---|
| Surface Preparation: | Remove all dirt, oil, grease, chemicals by |
| Surface Preparation: (Existing) | High pressure water blasting. Remove all rust and loose damaged paint by abrasive blast cleaning per SSPC-SP7 (Brush Off Blast) or by SSPC-SP2 & 3 Hand & Power Tool Cleaning. |
| Surface Preparation: (Shop Primed) | Piping, fittings, and valves shall be shop Primed in accordance with Specification Sections 15005 and 15100. Equipment, pumps and motors shall be shop primed per applicable Specification Sections. |
| Spot Prime: | Spot prime all bare metal areas with an epoxy mastic at 5.0 mils DFT. |
| Prime Coat: | Epoxy Mastic 5.0 Mils DFT. |
| Top Coat: | Polyurethane 3.0 Mils DFT. |
| Sealant: | Apply single component sealant as specified in Section 07900 - Sealants, at location where two pieces of steel overlap, between flanges, at bolts, etc. |
| MDFT: | 8.0 Mils for the two (2) coat system. |
| Color: | Color as scheduled on drawings. |

**C. System No. 7E - Interior Metal (Existing/Shop Primed) - Highly Corrosive.**

| | |
|---|---|
| Surface Preparation: (Existing) | Remove all dirt, oil, grease, chemicals by High pressure water blasting. Remove all rust and loose damaged paint by abrasive blast cleaning per SSPC-SP7 (Brush Off Blast) or by SSPC-SP2 & 3 Hand & Power Tool Cleaning. |
| Surface Preparation: (Shop Primed) | Piping, fittings, and valves shall be shop Primed in accordance with Specification Sections 15005 and 15100. Equipment, pumps and motors shall be shop primed per applicable Specification Sections. |
| Spot Prime (Existing): | Spot prime all bare metal areas with an epoxy mastic at 5.0 mils DFT. |
| Prime Coat: | Epoxy (Non-Potable) 7.0 Mils DFT. |
| Top Coat: | Epoxy (Non-Potable) 3.0 Mils DFT. |
| MDFT: | 10.0 Mils for the two (2) coat system. |
| Color: | As scheduled on Drawings. |

**D. System No. 23E - Chemical Resistant Wall (Concrete Masonry)-Existing**

| | |
|---|---|
| Surface Preparation: | Remove all dirt, oil, grease, chemicals and loose paint by high pressure water blasting (3500 PSI with a turbo tip). Remove as much of the topcoats from the block filler as possible. All remaining topcoat must be tightly adhering. Feather all edges of remaining topcoat. |
| Top Coat: | Two (2) coats Waterborne Acrylic Epoxy (Semi-Gloss) at 4.0 - 6.0 mils DFT per coat. |
| Color: | As scheduled on Drawings. |

**E. System No. 24 - Exposed FRP, PVC.**

| | |
|---|---|
| Surface Preparation: | Solvent cleaning, SSPC-SP1, to remove soluble contaminants. Remove all insuluble contaminants or foreign materials by hand, SSPC-SP2, or Power Tool Cleaning, SSPC-SP3. |
| Prime Coat: | Epoxy (non-potable) at 2.0 - 4.0 Mils DFT. |
| Top Coat: | High Build Acrylic Polyurethane at 2.0 - 4.0 Mils DFT. |
| MDFT: | 6.0 Mils for two (2) coat system. |
| Color: | As scheduled on Drawings. |

**F. System No. 24E - Exposed FRP, PVC (Existing)**

| | |
|---|---|
| Surface Preparation: | Remove all dirt, oil, grease, chemicals and loose paint by high pressure water blasting (min 3500 PSI) and scraping. Feather all edges. Lightly sand or abrade to roughen and de-gloss existing surface. |
| Prime Coat: | Epoxy (Non-Potable) 3.0 Mils DFT. |
| Top Coat: | Polyurethane 2.0 Mils DFT. |
| Color: | As scheduled on drawings. |

**G. System No. 25 - Interior FRP, PVC.**

| | |
|---|---|
| Surface Preparation: | Solvent cleaning, SSPC-SP1, to remove soluble contaminants. Remove all insoluble contaminants or foreign materials by hand, SSPC-SP2, or Power Tool Cleaning, SSPC-SP3. |
| Prime Coat: | Epoxy (Non-Potable) 3.0 Mils DFT. |
| Top Coat: | Epoxy (Non-Potable) 3.0 Mils DFT. |
| MDFT: | 6.0 Mils for the two (2) coat system. |
| Color: | As scheduled on Drawings. |

**H. System No. 25E - Interior FRP, PVC (Existing)**

| | |
|---|---|
| Surface Preparation: | Solvent cleaning, SSPC-SP1, to remove soluble contaminants. Remove all insoluble contaminants or foreign materials by hand, SSPC-SP2, or Power Tool Cleaning, SSPC-SP3. Lightly sand or abrade to roughen and de-gloss existing surface. |
| Prime Coat: | Epoxy (Non-Potable) 3.0 Mils DFT. |
| Top Coat: | Epoxy (Non-Potable) 3.0 Mils DFT. |
| MDFT: | 6.0 Mils for the two (2) coat system. |
| Color: | As scheduled on Drawings. |

**I. System No. 27 - Aluminum and Dissimilar Metal Insulation**

| | |
|---|---|
| Surface Preparation: | Scarify surface. |
| Top Coat: | Polyamide Epoxy Coal Tar at 10.0 mils DFT. |
| MDFT: | 10.0 mils for one (1) coat system. |
| Color: | Black. |

**J. System No. 109E - Existing Interior Concrete and Masonry (Semi-Gloss)**

| | |
|---|---|
| Surface Preparation: | Remove all dirt, oil, grease, chemicals and loose paint by high pressure water blasting (3500 PSI with a turbo tip). Remove as much of the topcoats from the block filler as possible. All remaining topcoat must be tightly adhering. Feather all edges of remaining topcoat. |
| Surface Profile: | ICRI CSP 1 |
| Patching: | Patch all existing holes in walls with non-shrink grout as specified in Section 03600 - Grout. |
| Caulking: | Prepare and fill all surface cracks (# 1/4-inch) with sealant as specified in Section 07900 - Sealants. Caulk all doors, louvers, and fans. |
| Spot Prime: | Acrylic Emulsion (low gloss) at 254 SFPGPC or Waterborne Acrylic Bonding Primer at 1.0-2.0 mils DFT. |
| Top Coat: | Two (2) coats Acrylic Polymer (Semi-Gloss) at 254 SFPGPC. |
| Color: | As scheduled on drawings. |

**K. System No. 111E - Existing Stucco Cementitious Coating (Flat)**

| | |
|---|---|
| Surface Preparation: | Remove all dirt, oil, grease, chemicals and loose paint by high pressure water blasting (min. 3500 PSI). |
| Surface Profile: | ICRI CSP 1 |
| Caulking: | Prepare and fill all surface cracks (# 1/4-inch) with sealant as specified in Section 07900 - Sealants. Caulk all doors, louvers, and fans. |
| Patching: | Patch all existing holes (or holes resulting from work) in walls with non- shrink grout as specified in Section 03600 - Grout. |
| Cementitious Repair: | Thoroseal plaster mix with sponge finish. (For damaged areas greater than 3-inch diameter) |
| Prime: | Acrylic Emulsion (Low Gloss) at 2.0-3.0 Mils (287 SFPGPC) |
| Top Coat: | Acrylic Emulsion (Low Gloss) at 2.0-3.0 Mils (287 SFPGPC). |
| Color: | As scheduled on drawings. |

## 3.10 UNIDENTIFIED SURFACES

A. Any surfaces not specifically named in the Schedule and not specifically excluded or exempted shall be prepared, primed and painted in the manner and with materials consistent with these Specifications. The ENGINEER shall select which of the manufacturer's products, whether the type is indicated herein or not, shall be used for such unidentified surfaces. This painting shall be done within the Scope of the Contract.

## 3.11 WORKMANSHIP

A. On metal surfaces apply each coat of paint at the rate specified by the manufacturer to achieve the minimum dry mil thickness required. If material has thickened or must be diluted for application by spray gun, the coating shall be built up to the same film thickness achieved with undiluted material. One gallon of paint as originally furnished by the manufacturer shall not cover a greater area when applied by spray gun than when applied unthinned by the application of an additional coat(s). On masonry, application rates will vary according to surface texture, however, in no case shall the manufacturer's stated coverage rate be exceeded. On porous surfaces, it shall be the painter's responsibility to achieve a protective and decorative finish either by decreasing the coverage rate or by applying additional coats of paint.

B. All safety equipment shall be painted in accordance with OSHA Standards as approved.

C. Materials shall be mixed in proper containers of adequate capacity. All materials shall be thoroughly stirred before use and shall be kept stirred while using. No unauthorized thinners or other materials shall be added to any paint.

D. Only skilled painters shall be used on the Work and specialists shall be employed where required.

E. Steel members, metal castings, mechanical and electrical equipment and other metals which are shop primed before delivery at the site will not require a prime coat on the job. All piping and other bare metals to be painted shall receive one coat of primer before exposure to the weather, and this prime coat shall be the first coat as specified in the painting schedule.

F. Finish surfaces shall not show brush marks or other irregularities. Undercoats shall be thoroughly and uniformly sanded with No. 00 sandpaper or equal to remove defects and provide a smooth even surface. Top and bottom edges of doors shall be painted and all exterior trim shall be back-primed before installation.

G. Painting shall be continuous and shall be accomplished in an orderly manner so as to facilitate inspection. All exterior concrete and masonry painting shall be performed in one continuous manner structure by structure. Materials subject to weathering shall be prime coated as quickly as possible. Surfaces of exposed members that will by inaccessible after erection shall be cleaned and painted before erection.

H. Before final acceptance of the Work, all damaged surfaces of paint shall be cleaned and repainted as directed by the ENGINEER.

## 3.12 APPLICATION SCHEDULE

A. Coating systems shall be used at locations as scheduled on the drawings.

B. **System No. 27 - Aluminum and dissimilar metal insulation.** This system shall be used on all aluminum in contact with concrete. Insulate all contacting dissimilar metals with this system. Neoprene pads may be substituted to insulate aluminum from concrete or aluminum from steel.

## 3.13 COLOR CODING FOR PIPES AND EQUIPMENT

A. All existing piping, valves, and equipment that are repainted shall be color coded. When color coding is specified, it shall consist of color code painting and lettering identification of all exposed conduits, trough items and pipelines for the transport of gases, air, liquid and semi-liquids including all accessories such as valves, insulated pipe coverings, fittings, junction boxes, bus bars, connectors and all operating accessories which are integral to be whole function mechanical pipe and electrical conduit system.

B. All hangers and pipe support floor stands shall be painted. The system shall be painted up to but not including the flanges attached to the mechanical equipment nor the flexible conduit connected to electrical equipment. Colors shall be as noted in the Finish Schedules.

C. All systems which are an integral part of the equipment that is originating from the equipment and returning to the same piece of equipment, shall be painted between and up to but not including the fixed flanges or connections on the equipment.

D. Color coding requirements are as indicated by the Finish Schedules contained in the Drawings.

E. CONTRACTOR shall submit proposed schedule for color coding pipes and equipment for approval by ENGINEER/OWNER.

**3.14 PIPE LABELING**

A. All exposed piping repainted shall be labeled to indicate flow stream and direction of flow.

B. Labels shall be installed following completion of specified protective coating system application.

C. Maximum spacing between labels shall be 10'-0" on center.

**D.** In locations where pipes are horizontally or vertically stacked, pipe labels shall be arranged in similar.

**3.15 CLEAN UP**

A. It shall be the responsibility of the Contractor to collect and dispose of properly, all waste materials from the site in accordance with all requirements of the Federal, State and local Environment Protection Agencies.

B. At completion of the Work, remove all paint where spilled, splashed, splattered, sprayed or smeared on all surfaces, including glass, light fixtures, hardware, equipment, painted and unpainted surfaces.

C. After completion of all painting, the Contractor shall remove from the job site all painting equipment, surplus materials and debris resulting from this Work.

END OF SECTION

**PAINT SYSTEM DATA SHEET**

Paint system number (from spec): _____

Paint system title (from spec): _____

Coating supplier name: _____

address: _____

Local representative name: _____

address: _____

Surface Preparation: _____

_____

| Paint Material (Generic) | Product Number/Name (Proprietary) | Coats/Minimum Coverage | Color |
|---|---|---|---|
| | | | |
| | | | |
| | | | |
| | | | |
| | | | |
| | | | |

Notes:

_____

_____

**SECTION 13700**

**PROCESS INSTRUMENTATION AND CONTROLS**

## PART 1 GENERAL

### 1.01 WORK INCLUDED

A. Provide all engineering, labor, materials and equipment to furnish, install, adjust, test, document and start-up all process instrumentation and controls as shown on the Drawings and specified herein, complete.

B. The process instrumentation and control system specified herein shall be a complete system.

C. Like items of equipment provided hereunder shall be the end products of one manufacturer in order to achieve standardization for appearance, operation and maintenance.

D. All items specified herein this Section may not be specifically required for this project. I&C INTEGRATOR shall coordinate the requirements of this Section with the work required for proper completion of the project.

E. See CONTRACT CONDITIONS and Division 1, GENERAL REQUIREMENTS, which contain information and requirements which apply to the work specified herein and are mandatory for this project.

### 1.02 RELATED WORK SPECIFIED ELSEWHERE

A. Section 13710 – Programmable Logic Controller.

B. Section 13711 - Existing SCADA System Modifications.

C. Section 13712 – Local HMI System Development.

D. Section 13725 - Loop Functions/Programming Strategies/Protocols.

E. Section 13751 - RTU Sub System.

F. Section 13752 – Computers and Accessories.

G. Section 13753 – Computer Consoles and Accessories.

H. Section 13759 – Modifications to Existing Panels and MCC’s.

I. Division 16 – Electrical.

### 1.03 REFERENCE SPECIFICATIONS, CODES AND STANDARDS

A. ISA Standards and Practices for Instrumentation - Current Edition.

### 1.04 DEFINITIONS

A. The instrumentation and control (I&C) integrator shall be a single firm, under direct contract and direction of the CONTRACTOR. The

I&C INTEGRATOR shall assume complete responsibility for the engineering, furnishing, technical advice on, certification as to correctness of installation, final connections to, adjusting, documenting, testing and start-up of the process instrumentation and control system(s) shown on the Drawings and specified herein. The I&C INTEGRATOR may have the electrical subcontractor make final connections of the I&C system(s), but the I&C INTEGRATOR shall be fully responsible for these connections.

B. CONTRACTOR, as distinct from the I&C INTEGRATOR, shall provide all additional materials and labor necessary to supplement the materials and labor provided by the I&C INTEGRATOR as necessary to satisfy the requirements of this project.

C. System acceptance shall be defined as the point in time when:

1. All submittals and documentation have been submitted, reviewed and accepted.

2. The complete system of instrumentation and controls has successfully completed all testing requirements specified herein.

3. All OWNER's staff personnel training has been completed.

**1.05 SYSTEM INSTALLATION RESPONSIBILITY**

A. The CONTRACTOR shall be ultimately responsible for the complete and proper installation of the process instrumentation and control system. The CONTRACTOR shall either include installation within the scope of the I&C INTEGRATOR's contract or shall provide for the installation by an experienced I&C system installer, acceptable to ENGINEER.

**1.06 SUBMITTALS**

A. Submittals shall be in accordance with Section 01300 - Submittals.

B. Catalog information, descriptive literature, wiring diagrams, and shop drawings on all controllers, recorders, indicators, transmitters, primary elements, flow measuring equipment and appurtenances, gauges, and all other components of the system shall be provided.

C. Individual data (or specification) sheets shall be provided for all components provided under this section. The purpose of these data sheets is to supplement the generalized catalog information provided by citing all specific features for each specific component (e.g.: scale range, materials of construction, special options included, etc.). Each component data sheet shall bear the component name and instrument tag number designation shown on the Drawings and Specifications.

D. Catalog information on all electrical devices furnished under this section.

E. Shop Drawings and catalog material for all control panels and enclosures.

F. Panel elementary diagrams of prewired panels. Diagrams shall be similar to those diagrams shown on the Drawings, but with the addition of all switched analog signals and all auxiliary devices such as relays, alarms, fuses, lights, fans, heaters, etc. Drawings shall include all terminal numbers.

G. Plumbing diagrams of preplumbed panels and interconnecting plumbing diagrams.

H. Interconnecting wiring diagrams, showing all component and panel terminal board identification numbers and external wire numbers. This diagram shall include all intermediate terminations between field elements and panels (e.g., terminal junction boxes, motor control centers, etc.). This diagram shall be coordinated with the Electrical Subcontractor and shall bear his mark showing that this has been done. Diagrams, device designations, and symbols shall be in accordance with NEMA ICA 1-101.

I. A tabulation of steady state air consumption of each pneumatic instrument (as applicable).

J. Loop diagrams, which shall consist of an individual wiring and/or plumbing diagram for each analog loop showing all terminal numbers, the location of the dc power supply, the location of any booster relays or common dropping resistors, etc. The loop diagrams shall meet the minimum requirements of ISA S5.4 plus the following requirements: each loop diagram shall be divided into three areas for identification of element locations: panel face, back-of-panel, and field, respectively. On each diagram present a tabular summary of: (a) the output capability of the transmitting instruments, (b) the input impedance of each receiving instrument, ©) an estimate of the loop wiring impedance based on the wire sizes and lengths shown, (d) the total loop impedance, and (e) reserve output capacity. Loop diagrams shall be on individual 8-1/2-inch by 11-inch or 11-inch by 17-inch Drawings.

K. Systems testing, calibration and adjustment procedures along with the proposed calibration, adjustment and check-out forms for this project.

L. Operation and maintenance manual including operating and maintenance information and specifications for all components specified under this Section. Submitted literature shall be of sufficient detail so as to facilitate the operation, removal, installation, adjustment, calibration and maintenance of each component specified in this Section. O&M Manuals shall include internal wiring diagrams for all panels. Wiring diagrams shall show all terminal block number designations and wire numbers.

Operation and Maintenance Manual shall also include the following:

1. Detailed descriptive control strategies and start/stop sequences in narrative English.

2. Description of equipment protection, interlocks and alarm settings.

3. Detailed descriptive instructions for clearing and resetting alarm functions.

4. Details descriptions of normal, bypass and emergency operation procedures.

5. Final instrumentation technician field settings.

6. Final drawings in Autocad format.

M. The I&C INTEGRATOR shall submit one set of as-built Drawings in Autocad format of all process and instrumentation diagrams. P&ID's shall be same format as in Contract Documents.

N. All test results, system calibration and adjustment settings shall be submitted to ENGINEER for review prior to the introduction of current to the system of individual components.

**1.07 QUALITY ASSURANCE**

A. The CONTRACTOR's attention is directed to the fact that the instrumentation and control functions result in an integrated system. Therefore, it is the intention of this specification that all controls and instruments including panel assemblies, will be provided, furnished, assembled and shipped, along with installation supervision, inspection and start-up by one Instrumentation integrator which has a minimum of five (5) years of experience on installations of similar complexity even though individual control and instrumentation components may be the standard products of separate manufacturing companies.

B. Since many control items and instrumentation devices involve the assembly and interlocking functions of many individual parts, solenoids, pressure switches, timing relays, relays, switches, push buttons, contacts, dials, charts, clocks, pens, etc., the functional system descriptions contained herein are given to allow the Instrumentation Subcontractor to choose the proper components and to assemble them so as to provide a rugged, low maintenance, easy cleaning, reliable mechanism suitable for the temperature, salt spray and humidity conditions of the South Florida coastal area and which will perform the described function(s).

C. All of the equipment furnished by the Instrumentation integrator shall be the latest and proven design. Specifications and Drawings call attention to certain features, but do not purport to cover all details entering into the design of the instrumentation system. The completed system shall be compatible with the functions required and the equipment furnished by the CONTRACTOR.

**1.08 SEQUENCING AND SCHEDULING**

A. Every effort shall be made to minimize interference with the OWNER's existing plant operation. Should any shutdown, total or partial, be required, it shall be scheduled and coordinated with the OWNER and his approval must be obtained prior to the shutdown.

B. The I&C INTEGRATOR shall obtain from the CONTRACTOR the required information on those primary elements, valves, valve actuators and other control equipment or devices that are required to be interfaced with, but are not provided within the context of this section.

C. The I&C INTEGRATOR shall coordinate his work with the CONTRACTOR to ensure that all components provided under this section are properly installed; the proper type, size and number of control wires and conduits are provided and installed; the proper type, size and number of pneumatic tubes with their conduits are provided and installed and proper electrical circuits are provided for all components and systems.

**1.09 DELIVERY, STORAGE AND HANDLING**

A. Proper shipping, storage and handling procedures shall be followed as recommended by the equipment MANUFACTURER and as specified herein.

B. All parts shall be properly protected so that no damage or deterioration will occur during shipment, normal unloading, storage and installation.

C. All equipment and parts must be properly protected against any damage during a prolonged storage period at the site. Proper job site storage is the responsibility of the CONTRACTOR.

D. Factory assembled parts and components shall not be dismantled for shipment unless permission is received in writing from the ENGINEER. This provision shall not apply if the items are too large to be shipped in a completely assembled condition.

E. Finished iron or steel surfaces not painted shall be properly protected to prevent rust and corrosion.

F. Each box or package shall be properly marked to show its net weight in addition to its contents.

**1.10 WARRANTY**

A. The manufacturer, I&C INTEGRATOR, and CONTRACTOR shall warrant the equipment being supplied to the OWNER against all defects in workmanship and materials for a period of two (2) year(s). Warranty period shall commence on Substantial Completion date as outlined in the GENERAL CONDITIONS. Warranties for all equipment installed under this contract shall run concurrently.

B. The MANUFACTURER's warranty period shall run concurrently with the CONTRACTOR's warranty period. No exception to this provision shall be allowed. The CONTRACTOR shall be responsible for proper storage of the equipment so as to remain in an "as shipped" condition. If the equipment remains in storage at the job site for longer than six (6) months, before installation, the CONTRACTOR may be required to provide factory service personnel for a complete inspection of the equipment. Any work necessary to restore the equipment to an "as shipped" condition will be the responsibility of the CONTRACTOR.

## 1.11 TEST PROCEDURE DEVELOPMENT AND DOCUMENTATION

A. I&C INTEGRATOR shall prepare and submit to the ENGINEER for review, a detailed description of the test procedures that he proposed to perform to demonstrate conformance of the complete system of instrumentation and controls to this Specification.

B. It is recommended that the I&C INTEGRATOR develop the test procedures in two steps by first submitting general descriptions and outlines of the tests and then, upon receipt of approval, submit the required detailed procedures and forms.

C. Operational Acceptance Tests

1. The I&C INTEGRATOR shall prepare check-off sheet(s) for each loop and an instrument calibration sheet for each active I & C element (except simple hand switches, lights, etc.). These check-off and data sheets shall form the basis for these operational tests and this documentation.

2. Each loop check-off sheet shall cite the following information and shall provide spaces for sign-off on individual items and on the completed loop by the I&C INTEGRATOR:

   a. Project name;
   b. Loop number;
   c. For each element: Tag number, description, manufacturer and model number, installation bulletin, and Specification sheet number;
   d. Loop description;
   e. Installation check;
   f. Termination check;
   g. Calibration check;
   h. Adjustment check;
   i. Space for comments;
   j. Space for loop sign-off by I&C INTEGRATOR and date.

3. Each instrument calibration sheet shall provide the following information and a space for sign-off on individual items and on the completed unit by the I&C INTEGRATOR:

   a. Project name;
   b. Loop number;
   c. Tag number;
   d. Manufacturer;
   e. Model number;
   f. Serial number;
   g. Calibration range;
   h. Calibration data: Input, output, and error at 10 percent, 50 percent and 90 percent of span;
   i. Switch setting, contact action, and dead band for discrete elements;
   j. Space for comments;
   k. Space for sign-off by I&C INTEGRATOR and date.

D. Functional Acceptance Tests

The I&C INTEGRATOR shall prepare two types of test forms as follows:

1. For those functions that can be demonstrated on a loop-by-loop basis, the form shall include:

   a. Project name;
   b. Loop number;
   c. Loop description;
   d. Test procedure description;
   e. For each component: Tag number, description, manufacturer, and data sheet number;
   f. Space for sign-off and date by both I&C INTEGRATOR and ENGINEER.

2. For those functions that cannot be demonstrated on a loop-by-loop basis, the test form shall be a listing of the specific tests to be conducted. With each test description the following information shall be included:

   a. Spec page and paragraph of function demonstrated;
   b. Description of function;
   c. Space for sign-off and date by both I&C INTEGRATOR and ENGINEER.

## PART 2 PRODUCTS

### 2.01 GENERAL

A. The process instrumentation and control system shall provide all of the functions as described herein Section 13725 for each loop and as shown by the electrical and P & ID Drawings. Major equipment items are specified for each loop. However, it shall be the responsibility of the I&C INTEGRATOR to provide all items of equipment, whether indicated or not, that are necessary to effect the required loop performance.

B. Display and control loops are shown on the Drawings.

C. Control panel(s) shall be provided with a U.L. label and be manufactured by a U.L. 508A panel manufacturer. Panel manufacturer shall submit proof of current enrollment in U.L.’s custom builder’s program.

D. Process instrumentation and controls systems subcontractor shall be one of the following:

1. C. C. Control Corporation
   1235 Parklane South
   Jupiter, FL 33458
   561/748-3737

2. Revere Control Systems, Inc.
   2240 Rocky Ridge Road
   Birmingham, AL 35216
   615/604-1579

3. Or equal.

**2.02 L8 LEVEL SWITCH, FLOAT TYPE WITH INTEGRAL SWITCH**

A. Direct-acting float type consisting of a mercury switch enclosed in a float and connected to a two-conductor, combination support and signal cable. The entire assembly shall form a completely watertight and impact-resistant unit. Floats shall be of chemical-resistant polypropylene material or other corrosion-resistant material. Cable shall be rugged and flexible with heavy neoprene or PVC jacket. The actuation/deactuation differential shall not exceed 1-inch. The mercury switch shall be rated at 5 amps at 120 VAC. Units shall be pipe mounted or suspended type as noted and provided with 30 feet of cable unless otherwise noted. Each pipe mounted type shall be provided with a clamp to secure the cable to its support pipe, 2 feet of stainless steel support pipe and stainless steel pipe mounting clamps.

B. Each suspended type shall be provided with necessary brackets and clamps to suspend the unit from the top of a tank or vessel. The suspended type shall include an integral or attached weight assembly for stabilization and positive operation of the unit. All mounting clamps shall be PVC or Neoprene.

C. Units shall be Anchor Scientific, Type S, or equal.

**2.03 L8E LEVEL SWITCH, FLOAT TYPE WITH INTEGRAL SWITCH (NON-MERCURY)**

A. Direct-acting float type consisting of a mercury free switch enclosed in a float and connected to a two-conductor, combination support and signal cable. The entire assembly shall form a completely watertight and impact-resistant unit. Floats shall be of chemical-resistant polypropylene material or other corrosion-resistant material. Cable shall be rugged and flexible with heavy neoprene or PVC jacket. The actuation/deactuation differential shall not exceed 1-inch. The switch shall be rated at 5 amps at 120 VAC. Units shall be pipe mounted or suspended type as noted and provided with 30 feet of cable unless otherwise noted. Each pipe mounted type shall be provided with a clamp to secure the cable to its support pipe, 2 feet of stainless steel support pipe and stainless steel pipe mounting clamps.

B. Each suspended type shall be provided with necessary brackets and clamps to suspend the unit from the top of a tank or vessel. The suspended type shall include an integral or attached weight assembly for stabilization and positive operation of the unit. All mounting clamps shall be PVC or Neoprene.

C. Units shall be Eco Float Model G as manufactured by Anchor Scientific, or equal.

**2.04 L10 LEVEL TRANSMITTER**

A. The 2-wire smart RF Admittance/Capacitance continuous level transmitter shall produce a HART compatible output of 4-20 mA that is proportional to level. It shall be capable of making the measurement independent of changes in material density and not be

affected by the presence of material clinging to the sensing element, a feature called Cote-Shield™. The measurement shall be free from the effects of changes in temperature, density, foam or acoustic noise in the vapor space above the level. System configuration and calibration can be accomplished from a PC based software with a HART Communication modem connected anywhere in the 2-wire loop. Configuration may be entered in user's choice of engineering units and system calibration can be accomplished by entering any two known level points, not necessarily empty and full. The output shall be compatible with the HART Protocol specification revision 5 or later.

B. The electronic unit shall be equipped with a built-in keypad and display module for ease of configuration and troubleshooting. The electronic unit shall be capable of operating in harsh environments with temperature ranges from -40°F to 167°F (-40°C to 75°C) and be protected from corrosion with a NEMA 4X rated housing. The system shall have the most versatile probe selection in the industry (over 125 standard probes) with varying process temperature and pressure (up to 537°C/1000°F and 690 Bar/10,000 PSI).

C. The electronic unit shall be a single device capable of use over a wide range of level applications by having an auto-ranging capacitance of 1 to 45,000 pF (PRO model) or 20 to 7,000 pF (LITE model). The electronic unit shall have provision for field changeable damping time and phasing (PRO model) in the event the measurement requires such changes to optimize the system performance. The output signal shall be free from effects of Radio Frequency Interference (RFI) when plant radios (walkie-talkies) are in the vicinity of the level transmitter. Further, the system shall be free from harmful effects of static electricity on the sensing element with discharges up to 4,000V being tolerated without damage.

D. Stainless Steel mounting bracket shall be provided by instrument manufacturer, as shown on drawings.

E. Unit shall be Drexelbrook Model Universal IV or equal.

**2.05 L16 RADAR LEVEL SENSOR W/REMOTE DISPLAY**

A. VEGAPULS 61, Radar Sensor for continuous level measurement of liquids. Part Number: PSWL61.XXBX6HKBX.

B. VEGADIS 82, External Loop Powered Display and Adjustment unit. Part Number: DIS82.IXHKINACK.

C. Wet well mounting bracket for radar sensor shall be type 316 stainless steel.

D. External display unit shall be mounted within existing pump control panel or RTU panel.

**2.06 L20 ULTRASONIC LEVEL TRANSDUCER**

A. Features shall minimally include:

1. Continuous Level Measurement.

2. Displays: High-contrast 4 digit, 18 mm LCDs, 5 LEDs.

3. Resolution: The greater of ±0.1% of range or 2mm.

4. Accuracy: to ±0.25% of range.

5. Rate Limit: Programmable from 0 to 9999 units/min.

6. Measurement Range: 0.3 to 10m (33 ft) using ST-H transducer.

7. Blanking: From .3m (1 ft).

8. Range Extension: Adjustable as a % of span.

9. Temperature Range: Electronics -20˚C to 50˚C (-4˚F to 122˚F); process temperature limits: -40˚ to 73˚C (-40˚ to 163˚F).

10. Power Supply: 100/115/200/230 Vac ±15% stab selectable (50/60 Hz, 15 VA max).

11. Packaging: Standard Unit - Polycarbonate CSA type 4/NEMA 4, IP65 rated enclosure; 160 x 240 x 82mm (6.3 x 9.5 x 3.2 in).

12. Access Programmer: ABS enclosure with polycarbonate membrane keypad, 102 x 66 x 25 mm (4 x 2.6 x 1 in.) Ultralife lithium power cell.

13. Output: 4-20 mADC, 2 wire, 24 VDC.

B. Unit shall be Siemens/Milltronics Hydroranger.

**2.07 L25 ULTRASONIC LEVEL SYSTEM**

A. Two-channel continuous level transmitter employing ultrasonic level measuring principle. It shall control (2) analog and digital output signals proportional to level, differential level, distance, volume or flow rate.

B. The level measuring system shall have maximum range of at least 30 ft. (9.1 m) on liquid applications with a near zone of 12 inches (305 mm). The accuracy shall be 0.15% of sensor range with a resolution of no less than 1/8th inch (3 mm).

C. 115 VAC, 60-Hz.

D. The output signals shall be (2) active 4-20 mA into a maximum 1000 ohms loop resistance, or digital outputs.

E. System shall have six (6) SPDT relays rated to 5A at 250 VAC. Each relay will be operated by a software assignable set point with a 0-100% adjustable dead band for open and close. Each relay will be assignable for control or alarm. There shall be an acknowledge push-button on the front panel for acknowledging alarm set points. All set points and relays can be assigned to either of the two input channels in any combination. Relays can be assigned for fault conditions of 3.7 mA or 22 mA error signals. Relays may be assigned for Batch Sample Activation with a programmable momentary dry contact closure

duration. Each relay will have a visible indication on the display denoting the relay state; configured or un-configured, energized or de-energized.

F. The 2-channel electronic transmitter shall be housed in a rugged Fiberglass Reinforced Polyester (FRP) indicating housing rated to NEMA 4X (IP-66) for corrosion resistance and wash down service.

G. The sensor(s) shall be completely encapsulated in a CPVC housing rated to NEMA 4X, NEMA 6/6P, IP-68, with a 25 ft. sealed flying lead. The sensor shall be capable of full submersion.

H. The sensor(s) shall be supplied with a 25-foot flying lead allowing field termination and sensor lead extension via a standard 2-wire twisted shielded pair. The sensor(s) shall be capable of being remotely mounted up to 1200 feet from the transmitter. The sensor(s) shall be supplied with a 3/4" and 2" NPT or 2" BSP process connection and be capable of being recessed in a 2 inch diameter nozzle up to 18 inches (0.45 m), which shall permit the system to measure level, volume or distance to the top of the vessel.

I. The recommended operating temperature range for the sensor shall be from -40 F to 158 F . The electronic unit shall be capable of ambient temperature ranges of —40 F to 158 F. An internal temperature sensor shall provide temperature compensation for variations in the speed of sound due to temperature changes and shall be automatic over the entire operating range of the system.

J. The electronic unit shall employ a nominal 50KHz operating frequency with a 10° acoustic beam angle (+/- 5° from transducer centerline).

K. System configuration shall be accomplished through a standard integral display with a 4-key, environmentally sealed membrane keypad and a 2-line, 7-digit, LCD display for level, distance, volume, flow, totalization, temperature or milliamp output. The user may select any (or all) display parameters (level, distance, flow, etc.) and toggle to each or configure to continuously scroll through all display selections. Echo strength will be displayed concurrent with displayed level data. The system shall be capable of displaying level data in the following engineering units: feet, inches, meters, centimeters, millimeters, gallons per minute, cubic meters per hour, or percent. The configuration menu shall be password protected to prevent unauthorized changes.

L. System software will support level, distance, volume and open channel flow rates for the following flumes and weirs: Parshall flumes, Rectangular weirs (with and without end contractions, Trapezoidal (Cippoletti) weirs, Trapezoidal flumes, V-Notch weirs, Leopold-Lagco flumes, PalmerBowlus flumes, Compound weirs, "H" flumes. A 21-point strapping table is included for user-defined vessels, weirs and flumes. The system shall incorporate two (2) totalizers, one (1) nonresettable and one (1) user resettable. The 2-channel system will also support differential level in a channel #1 vs. channel #2 scheme for standard applications such as traveling bar screen or submerged flow calculations and display.

M. Each system shall be supplied with SmartGainTM - a patented technique of automatically ignoring interfering signal reflections from non-level echoes and internal vessel obstructions, such as ladders, agitator blades and pipes, without user intervention. The system shall be capable of being configured with or without level being present in the vessel.

N. The system shall also be capable of making a measurement in a pipe up to a 30 ft. range. The pipe can be the same length as the measurement range or shorter than the measurement range and the pipe can be as small as 2" diameter.

O. The level measuring system shall be suitable for sensor installations in Class I, Div. 1 or Zone 0, or Zone 1 hazardous areas. The electronic enclosure will be suitable for Class I, Div. 2 (Zone 2) installations.

P. The manufacturer shall have 24 hours 7 days per week worldwide technical support and start up assistance capabilities.

Q. The continuous ultrasonic level system shall be of the following model: AMETEK Drexelbrook USonic-R™ Series Ultrasonic Level System, or equal.

R. Mounting brackets shall be provided by instrument manufacturer as shown on drawings.

**2.08 M7 MISCELLANEOUS ELECTRICAL**

A. Circuit Breakers
   1. For motor short circuit and overcurrent protection, circuit breaker shall be Square D with poles, voltage, rating and AIC as indicated on the drawings. Units shall interrupt the maximum prospective fault current available.
   2. For control circuits, units shall be Square D with poles, voltage and ratings as indicated on the drawings. Units shall interrupt the maximum prospective fault current available.

B. Fuses
   1. Bussman 600 volt, dual element type.

C. Control Relays
   1. Control relays shall be programmable.
   2. Omron, IDEC or equal.

D. Indicator Lights
   1. Square-D trans type 6 volt, Class 9001, Type K, push to test, or equal.
   2. Lens color shall be as noted.
   3. Single or dual indicator lights shall be as noted herein.
   4. Provide finger-safe contact blocks.

E. Selector Switches.
   1. Square-D, Class 9001, Type K, or equal.
   2. Operators shall be black knob type or key switch, 3-position or 2-position, as noted.
   3. Selector switches shall be spring return where noted.
   3. Provide finger safe contact blocks.

F. Pushbuttons.
   1. Square-D Class 9001, Type K, pushbutton, or equal.
   2. Provide finger safe contact blocks.
   3. Non-illuminated pushbuttons shall be black.

G. Elapsed Time Meter
   1. Hour meter, non-reset type, Cramer 635K, or equal.

H. Ground Fault Duplex Receptacle
   1. Leviton Duplex Receptacle or equal.
   2. AC receptacle box shall be Steel City 58351-1/2 or equal.
   3. Covers shall be Steel City 58-C-5, or equal.

I. Motor Starter
   1. Square D 8536 motor starters with NEMA rated contactors, minimum size 1 or as indicated on drawings. Provide overload blocks with overloads as required.
   2. Provide auxiliary contacts as required.
   3. Reset buttons Square D 9066-RA1, or equal.

J. Duplex Alternating Relay
   1. Diversified Electronics, ARA-120-ADA, Duplex Alternator or equal.

K. Phase Monitor
   1. Diversified or equal with auto reset.

L. Surge and Lightning Arrestors
   1. All control panels shall be provided with surge and lightning arrestors as specified.
   2. Power
      a. Surge arrestor shall be GE Tranquell, 9L18BBB301
   3. Lightning Surge Suppressor
      a. Lightning surge suppressors shall be Easton/IT Protector, model and series number to be determined by control panel manufacturer.
   4. Signal
      a. Panel surge arrestors (PSA) shall be Edco PC 642C Series, 2 channel or equal.
      b. Field surge arrestors (FSA) shall be Edco SS64 Series, pipe style or equal.
   5. Discrete signals
      a. Provide surge arrestor for discrete I/O.
      b. Surge arrestors shall be provided regardless of drawing indication.

M. Generator Receptacles
   1. Crouse Hinds AR20412-S22, 4 pole, 3 wire with ground, 200A, 600V reverse service with back box, for use on 480V systems.
   2. Russel Stol JRS 1044FR, 4 pole, 4 wire, with ground, 100 amp, 600V, reverse service for use on 240V systems.
   3. Angle Adaptor selected by amperage rating shall be provided for all generator receptacles.
   4. Coordinate with OWNER for exact model number before ordering. Match Owner=s standards.

N. LED Lamp
   1. Phoenix Contact, or equal.

O. High level alarm light
   1. Red, 120v, MAJOR, CVP1OR, or equal.
   2. Alarm light guard, Major, VGD-1, or equal.

P. Flasher
   1. 90 FPM, 120v.
   2. SSAC, FS127, or equal.

Q. Alarm Horn
   1. 120v, 103 dB.
   B. Faraday, or equal.

R. Ground Lug
   1. #1/0 Wire Ilsco AU-O, or equal.

S. Intrinsically Safe Relay (Barrier Relay)
   1. Barrier relays shall be SAF-PAK as manufactured by GEMS Sensors, for use in hazardous areas, with intrinsically safe-sensing circuit. Units shall be UL approved for use in Class I, Division 2, environments.

T. Time Delay Relays
   1. Time delay relays shall be programmable with adjustable ranges, DIP switch settable.
   2. Omron or equal.

U. Pump Cycle Counter
   1. 120V, electromechanical counter with reset button.
   2. Four digit display min.
   3. Redington Model P2 - 4904, or equal.

V. Ground Fault Monitor
   1. Bender GF monitor relay with SPDT output, 120 VAC, adjustable pickup, adjustable time delay separate CT, Model RCM460 Y Series, or equal.

W. Current Transmitter
   1. AT Series Current Transducer Model No.: AT2-420-24L-FR, as manufactured by NK Technologies.

X. Surge Protection Device (SPD
   1. Eaton Innovate Technology, EXQ080-3Y201.

Y. Operator Control Stations

   1. Allen-Bradley 30 mm, 800T Series, or equal, die cast aluminum, type 4 enclosure for surface mounting with:

      a. One (1) On/Off 800T selector switch

      b. One (1) 800T indicator lamp as scheduled herein.

Z. Audio/Visual Alarm

1. Audible/visual alarm kit with NEMA 4X box with 110 decibel horn, 40 watt flasher and red lens.

2. Audible/visual alarm shall be INGRAM AS115CLX40FS, or equal.

**2.09 P4 PRESSURE GAUGE**

A. Units shall be bellows or Bourdon tube actuated pressure gauges. Gauges shall be stem mounted with 4-1/2-inch dial size, unless otherwise noted. Casing material shall be black phenol with threaded polypropylene ring. Scale range shall be as noted and accuracy shall be plus or minus ½ percent of span.

B. The sensing element material shall be phosphor-bronze, unless otherwise noted.

C. Provide diaphragm seals as specified herein for all gauges in contact with fluids other than potable water.

D. Units with ranges below 10 psi shall be bellows actuated and shall be Ashcroft "General Service Series 1180", or equal.

E. Units with ranges above 10 psi shall be Bourdon tube actuated and shall be Ashcroft "Duraguage Type 1279", or equal.

**2.10 P6 PRESSURE SEAL, DIAPHRAGM**

A. Units shall consist of corrosion-resistant lower housing and diaphragm and instrument mounting upper housing. Lower housing shall have NPT female process and flushing connections and shall be 316 stainless steel, unless other noted. Diaphragm shall be 316 stainless steel unless otherwise noted. Upper housing shall have bleed screw NPT female instrument connection. Filling fluid shall be as noted.

B. Where noted, capillary assembly shall be furnished to connect diaphragm seal to instrument with length as noted.

C. Wherever practical, pressure seal shall be factory filled and assembled to primary element (i.e., pressure switch, pressure transmitter, ...).

D. Units shall be Ashcrost Type 101, or equal.

**2.11 P7, PRESSURE SENSOR**

A. Materials of construction:

1. Stainless Steel Body.

2. Stainless Steel 150 lb. Flanges.

3. Sleeve shall be Teflon coated Buna-N.

4. Fill fluid shall be Ethylene Glycol and water (200°F max).

B. Pressure sensor shall be Red Valve Series 48 or equal.

**2.12 P9 ELECTRONIC PRESSURE INDICATING/TRANSMITTER (GAUGE)**

A. Instrument shall be a field-mounted pressure transmitter for measuring gauge pressure and transmitting a liner 4 to 20 mA dc output for use in a standard 24 vdc supply voltage system.

B. The instrument range shall be fully adjustable throughout the span limit. Accuracy shall be ± 0.1% of Span.

C. All process-wetted parts of the instrument shall be Type 316 stainless steel. The transmitter shall be protected by a gasketed, weatherproof NEMA 4X enclosure. The transmitter shall be approved for use in hazardous locations (nonincendive for Class I and Class II, Division 2 locations; intrinsically safe or explosion proof for Class I and Class II, Division 1 locations). Housing finish shall be epoxy.

D. Transmitter shall include an integral special scaling analog meter and a stainless steel bleed valve.

E. Transmitter shall have a ½-inch NPT male thread process connection.

F. Transmitter shall be provided with integral mounting bracket and hardware for installation location as shown on Drawings.

G. Transmitter shall be Model 3051 pressure transmitter as manufactured by Rosemount, Inc.

H. When specified herein, the P9 electronic pressure indicating/transmitter (gauge) shall be provided with the specified diaphragm or pressure sensor. The pressure indicating/transmitter shall be factory mounted to the diaphragm or pressure sensor. The completed assembly shall be factory calibrated and tested to the specified instrument range.

**2.13 S26 DIGITAL INDICATOR/TOTALIZER**

A. Precision Digital Corporation or equal with 4-1/2 digit, 0.56" LED Display. Display ranges shall be as specified herein.

B. Unit shall provide for instantaneous and totalized process parameter readout. Integral front toggle switch shall be provided to select instantaneous or total process parameter readout. An integral front reset switch shall be provided for the total process parameter readout.

C. Unit shall have a designated area on the instrument face for identification of the unit with an engraved laminated plastic nameplate (service legend). Units shall operate on 24V dc power, unless otherwise noted.

**2.14 X1 CONTROL POWER TRANSFORMER**

A. Square D, Type KF, Class 9070, 50 VA (or minimum as indicated by the drawings); applies to 480 volts control panels.

**2.15 Z1 PROXIMITY SWITCH**

A. UL Listed, flush or surface mounted contact switch. Contacts shall be hermetically sealed.

B. Rated for 120V, Allen-Bradley 802M, or equal.

**2.16 Z2 MAGNETIC PROXIMITY SWITCH**

A. UL listed magnet actuated proximity sensor, 120V, 3 amp, limit switch, Square D SG08003, or equal.

B. Sensing magnet shall be Square D 7093, or equal.

**2.17 FIELD PANEL CONSTRUCTION (ENCLPS)**

A. Field panels shall be UL Listed, modified, NEMA 3R, Type 316 Stainless Steel enclosure with padlockable draw latches or 3-point padlockable handles conforming to the requirements of the National Electrical Manufacturer's Association.

B. In addition to the NEMA 3R standard, the panel shall conform to the following requirements:

1. Minimum metal thickness shall be 14-gauge.

2. All doors shall be rubber-gasketed with continuous hinge.

3. Provide Type 316 stainless steel drip shield.

4. Provide aluminum dead front panel for component mounting as shown on drawings.

5. Cabinet shall be mounted as indicated on the Drawings. Provide mounting ears as required. Field drilling of cabinet is prohibited.

6. Print pocket (full, 2 or 1/4 size) and one (1) set of reduced drawings shall be provided on interior side of door. (This requirement may be deleted where indicated on drawings.)

7. Minimum overall dimensions shall be as indicated by Drawings or as required by UL subject 508A for industrial control panels.

8. Provide door stop kits for outer cabinet door and dead front door.

9. Provide ARC flash label per N.E.C.

10. Where indicated on drawings, provide Lexan glass view window.

11. Where indicated on drawings, provide 316 SST sunshields and standoffs.

C. Cabinet enclosure shall be as manufactured by Hoffman, Wiegman, or equal.

**2.18 FIELD PANEL CONSTRUCTION (ENCL 1- WALL MOUNT SST)**

A. Field panels shall be UL Listed, modified, NEMA 3R, Type 316 Stainless Steel enclosure with padlockable draw latches or 3-point padlockable handles conforming to the requirements of the National Electrical Manufacturer's Association.

B. In addition to the NEMA 3R standard, the panel shall conform to the following requirements:

1. Minimum metal thickness shall be 14-gauge.

2. All doors shall be rubber-gasketed with continuous hinge.

3. Provide Type 316 stainless steel drip shield.

4. Provide aluminum dead front panel for component mounting as shown on drawings.

5. Cabinet shall be mounted as indicated on the Drawings. Provide mounting ears as required. Field drilling of cabinet is prohibited.

6. Print pocket (full, ½ or 1/4 size) and one (1) set of reduced drawings shall be provided on interior side of door. (This requirement may be deleted where indicated on drawings.)

7. Minimum overall dimensions shall be as indicated by Drawings or as required by UL subject 508A for industrial control panels.

8. Provide door stop kits for outer cabinet door and dead front door.

9. Provide ARC flash label per N.E.C.

10. Where indicated on drawings, provide Lexan glass view window.

11. Where indicated on drawings, provide 316 SST sunshields and standoffs.

12. Where indicated on drawings panels shall be designed to permit continuous operation of all components mounted therein with panel ambient temperatures of up to 105 degrees F. Panels shall be provided with louvers and forced ventilation as required to prevent temperature buildup due to electrical devices mounted in or on the panel. Forced ventilation fans shall be provided with washable or replaceable filters. Fan motors shall operate on 120-volt, 60-Hz power.

Provide a filtered fan package and exhaust grill kit. Mount exhaust fan on upper side of panel. Fan shall be capable of 350

CFM (minimum). Fan shall be manufactured by McLean Midwest, or equal.

Fan discharges shall be equipped with Type 304 or 316 stainless steel weather hoods.

Provide a thermostat controlled 120V electric heater to prevent accumulation of moisture within enclosure.

Limit control and ventilation system noise to a maximum of 80 dB at 40 feet from enclosure.

C. Cabinet enclosure shall be as manufactured by Hoffman, Wiegman, or equal.

**2.19 FIELD PANEL CONSTRUCTION (ENCL 2 - FREE STANDING)**

A. Panel shall be UL Listed, NEMA 12 Steel enclosure with 3-point padlockable handles conforming to the requirements of the National Electrical Manufacturer's Association.

B. Panel shall be constructed with external dimensions as shown on the Drawings. Instrument arrangement shall be as shown with minor modifications as required by the particular equipment furnished. Modifications shall be subject to the approval of the ENGINEER.

C. Fabricate each panel from sheet steel with one-piece, 10-gauge, steel front and 14-gauge steel sides, back, and top. The panels shall be so constructed that no seams or boltheads are visible when viewed from the front. Panel cutouts for instruments and other devices (e.g., lights and switches) shall be cut, punched, or drilled and smoothly finished with rounded edges.

D. Provide steel angle stiffeners on the back of the panel face to prevent panel deflection under instrument loading or operation. Internally, the panels shall be supplied with a structural steel framework for instrument support purposes and panel bracing. The internal framework shall permit panel lifting without racking or distortion. Provide removable lifting rings designed to facilitate simple, safe rigging and lifting of the panel during installation. Plugs shall be provided and shall unobtrusively fill the panel lifting ring holes when substituted for the lift rings after installation is complete. Where two or more panels are shown mounted immediately adjacent to one another, they shall be securely bolted together with their front faces parallel.

E. Each panel shall be provided with full height, fully gasketed access doors where shown. Doors shall be provided with three-point latches, Southco Type 44; or equal. Latching mechanism shall be keylocking. Front and side access doors shall be as shown. All panel access doors shall be provided with full length, continuous, piano type, steel hinges with stainless steel pins.

F. Provide door stop kits for all panel doors.

G. Freestanding panels shall be provided with switched 100-watt incandescent back-of-panel lights. One light shall be provided for

every 4 feet of panel width and shall be mounted inside and in the top of the back-of-panel area.

H. Freestanding panels shall be provided with a 15-amp, 120-volt, service outlet circuit within the back-of-panel area. The circuit shall be provided with 20-ampere molded case circuit breaker with toggle operator to switch the circuit on and off. Circuit shall be provided with three-wire, 120-volt, 15-ampere, duplex receptacles one for every 4 feet of panel width (two minimum per panel) and spaced evenly along the back-of-panel area.

I. All panels shall be designed to permit continuous operation of all components mounted therein with panel ambient temperatures of up to 105 degrees F. Panels shall be provided with louvers and/or forced ventilation as required to prevent temperature buildup due to electrical devices mounted in or on the panel. Except for panels mounted with their backs directly adjacent to a wall, louvers shall be stamped sheet metal construction. For panels mounted with their backs directly adjacent to a wall, louvers shall be on the sides. Forced ventilation fans, where used, shall be provided with washable or replaceable filters. Fan motors shall operate on 120-volt, 60-Hz power.

J. Provide ARC flash label per N.E.C.

K. Cabinet enclosure shall be as manufactured by Hoffman, Wiegman, or equal.

**2.20 FIELD PANEL CONSTRUCTION (ENCL 3 - FREE STANDING SST)**

A. Control panel shall be free standing UL Listed, modified, NEMA 3R, Type 304 or 316 stainless steel (see drawings) enclosure with 3-point padlockable handles conforming to the requirements of the National Electrical Manufacturer’s Association.

B. In addition to the NEMA 3R standard, the panel shall conform to the following requirements:

1. Minimum metal thickness shall be 12-gauge.

2. All doors shall be rubber-gasketed with continuous hinge.

3. Provide aluminum dead front and back plate panel for component mounting as shown on Drawings.

4. Print pocket and one (1) set of reduced drawings shall be provided on interior side of one door.

5. Minimum overall dimensions shall be as noted on Drawings or as required by UL Subject 508A for industrial control panels.

6. Provide door stop kits for outer cabinet doors and deadfront doors.

7. Limit control and ventilation system noise to a maximum of 80 dB at 40 feet from enclosure.

8. Where indicated on drawings, provide Type 316 stainless steel sun shields on panel doors, sides, and top.

9. All panels shall be designed to permit continuous operation of all components mounted therein with panel ambient temperatures of up to 105 degrees F. Panels shall be provided with louvers and forced ventilation as required to prevent temperature buildup due to electrical devices mounted in or on the panel. Forced ventilation fans shall be provided with washable or replaceable filters. Fan motors shall operate on 120-volt, 60-Hz power.

   Provide a filtered fan package and exhaust grill kit. Mount exhaust fan on upper side of panel. Fan shall be capable of 350 CFM (minimum). Fan shall be manufactured by McLean Midwest, or equal.

   Fan discharges shall be equipped with Type 304 or 316 stainless steel weather hoods.

   Provide a thermostat controlled 120V electric heater to prevent accumulation of moisture within enclosure.

10. Cabinet shall be mounted as indicated on the Drawings. Provide mounting tabs as required. Field drilling of cabinet is prohibited.

11. Cabinet enclosure shall be designed to withstand pressures in accordance with ASCE 7- (current edition) per Florida Building Code Section 1609. (Criteria shall be as noted on Drawings.) Panel manufacturer shall provide stiffeners and mounting angles as required.

12. Interior and exterior coating of cabinet and cabinet accessories (hoods, etc.) shall be as noted on drawings.

13. Provide ARC flash label per N.E.C.

C. Cabinet enclosure shall be as manufactured by Hoffman, Wiegman, or equal.

**2.21 PANEL ELECTRICAL**

A. Wiring

1. All electrical wiring shall be in accordance with the applicable requirements of Division 16 - Electrical. Wires shall be 600-volt class, PVC insulated stranded copper and shall be of the sizes required for the current to be carried, but not below 14 AWG enclosed in either sheet metal raceway or plastic wiring duct. Wiring for signal circuits shall be twisted shielded pairs not smaller than No. 16 AWG, and be separated at least 6 inches from any power wiring.

2. All panel wiring shall be labeled with T&B Shrink-Kon HVM marker system.

B. Terminal Blocks

1. Terminal blocks shall be one-piece molded plastic blocks with screw type terminals and barriers rated for 300 volts. Terminals shall be double sided. Terminals shall have permanent, legible identification.

2. Wires shall be terminated at the terminal blocks. Lugs shall be of the appropriate size for the terminal block screws and for the number and size of the wires terminated.

3. Terminals shall be Allen Bradley 1492 series, or equal.

4. Allow 20% extra terminals for spares.

C. Power Supplies

1. Provide dc power supplies as required to power instruments requiring external dc power.

2. Power supplies shall convert 120V ac, 60-Hz power to dc power of the appropriate voltage(s) with sufficient voltage regulation and ripple control to assure that the instruments being supplied can operate within their required tolerances.

3. Output overvoltage and overcurrent protective devices shall be provided with the power supply to protect the instruments from damage due to power supply failure and to protect the power supply from damage due to external failure. Provide NEMA 1 enclosure for all power supplies. Power supplies shall be mounted such that dissipated heat does not adversely affect other components.

D. Wire Ducts

1. Wire duct shall be Panduit, or equal.

E. Miscellaneous Features

1. Provide LED courtesy light, convenience outlet, lightning arrestor, surge arrestor, loop power supplies (with surge protection specified herein), circuit breakers and power supply.

2. Items required shall be as indicated on the drawings.

## 2.22 NAMEPLATES, NAME TAGS AND SERVICE LEGENDS

A. All components provided under this section, both field and panel mounted, shall be provided with permanently mounted name tags bearing the entire ISA tag number of the components. Panel mounted tags shall be plastic; field mounted tags shall be stamped stainless steel.

B. Circuit breakers and all dead front panel items shall be clearly labeled by name, not tag number. Nameplates are defined as inscribed laminated plastic plates mounted under or near a panel face mounted instrument. Service legends are defined as inscribed laminated plastic integrally mounted on a panel face mounted instrument.

C. Service legends and nameplates shall be engraved, rigid, laminated plastic. Service legends and nameplates shall be fastened to the panel by screws or with a specially applied adhesive. Fastening shall not depend only on the adhesive backing of the nameplate. Unless otherwise noted, color shall be black with white letters and letter height shall be 3/16-inch.

D. Field mounted tags shall be 16-gauge, 304 stainless steel with 3/16-inch high characters.

E. Each panel shall be provided with a cabinet face mounted laminated nameplate as specified above. Unless otherwise noted, color shall be black with white letters 2-inch high.

**2.23 SPARE PARTS**

A. Furnish the manufacturer's recommended spare parts including at least the following:

1.

B. All parts shall be furnished in containers which are clearly marked and identified as to the contents.

C. Provide spare parts bill of materials with submittals for approval.

**PART 3 EXECUTION**

**3.01 GENERAL**

A. Install materials and equipment in a workmanlike manner utilizing craftsmen skilled in the particular trade. Provide work which has a neat and finished appearance.

B. Electrical work shall be performed in compliance with these Specifications. Where these Specifications and the Drawings do not delineate precise installation procedures, API RP 550 shall be used as a guide to installation procedures.

C. Coordinate I&C work with the OWNER, the CONTRACTOR and work of other trades to avoid conflicts, errors, delays and unnecessary interference with operation of the existing plant(s) during construction.

**3.02 PROTECTION OF EQUIPMENT**

A. Throughout this Contract, the Contractor shall provide protection for materials and equipment against loss or damage and from the effects of weather. Prior to installation, store items in indoor, dry locations. Provide heating in storage areas for items subject to corrosion under damp conditions. Specific storage requirements shall be in accordance with the ENGINEER-reviewed I&C INTEGRATOR's recommendations.

## 3.03 EQUIPMENT INSTALLATION

A. Follow manufacturers' installation instructions explicitly, unless otherwise indicated. Wherever any conflict arises between manufacturers' instructions, and these Contract Documents, follow ENGINEER's decision, at no additional cost to OWNER. Keep copy of manufacturers' instructions on the job site available for review at all times.

## 3.04 ELECTRIC CONTROL AND SIGNAL WIRING

A. Control and signal wiring external to the control panels and all power wiring shall conform to the requirements of Division 16 - Electrical.

B. Control and signal wiring in control panels shall be restrained by plastic ties or ducts. Hinge wiring shall be secured at each end so that any bending or twisting will be around the longitudinal axis of the wire and the bend area shall be protected with a sleeve.

C. Arrange wiring neatly, cut to proper length and remove surplus wire. Provide abrasion protection for any wire bundles which pass through holes or across edges of sheet metal.

D. Wiring shall not be spliced or tapped except at device terminals or terminal blocks.

E. Panels and panel mounted equipment shall be assembled as far as possible at the I&C INTEGRATOR's plant. No work, other than correction of minor defects or minor transit damage, shall be done on the panels at the job site.

F. I&C INTEGRATOR shall observe and advise on the installation to the extent required to certify in writing that the equipment will perform as required.

## 3.05 MANUFACTURER'S SERVICES

A. The supervisory services of a factory-trained service engineer who is specifically trained on the type of equipment herein specified shall be provided for a period specified below during construction to assist the CONTRACTOR in the location of sleeves; methods of installing conduits and special cable; mounting, piping and wiring of one of each type of device and the method of protecting all of the equipment prior to placing it into service. Upon completion of the installation, the services of the above service engineer shall be provided for a period specified below for calibration and start-up of the equipment. The minimum days specified below do not relieve the Instrumentation Subcontractor from providing sufficient service to place the system into satisfactory operation.

| Event | Duration (Minimum) |
|---|---|
| Construction/Installation Assistance | Five (5) Eight (8) Hour Man Days |
| I&C System(s) Startup/Calibration | Five (5) Eight (8) Hour Man Days |
| OWNER Personnel Instruction | Five (5) Eight (8) Hour Man Days |

B. No form of energy shall be turned on to any part of the instrumentation system prior to receipt by the ENGINEER of a certified statement of approval of the installation from the CONTRACTOR containing his supplier's authorization for energizing the system.

C. A factory trained service engineer shall be provided for placing the system into operation. After the system is being operated by the OWNER's personnel, the service engineer shall return for a one-day instruction course in the maintenance and operation of the system.

D. All instrumentation shall be calibrated in the presence of the ENGINEER in accordance with the range and accuracy specified herein. Certified test reports shall be filed with the ENGINEER.

**3.06 TESTING**

A. All elements of the Instrumentation and Control system shall be tested to demonstrate that the total system satisfies all of the requirements of this specification.

B. All special testing materials and equipment shall be provided by the I&C INTEGRATOR. Where it is not practical to test with real process variables, the I&C INTEGRATOR shall provide suitable means of simulation. These simulation techniques shall be subject to the approval of the ENGINEER.

C. The I&C INTEGRATOR shall coordinate all of his testing with the CONTRACTOR and all other associated subcontractors.

D. As a minimum, the testing shall include the following:

1. Factory Tests

    a. All analog panels and panel assemblies shall be tested for proper operation at the I&C INTEGRATOR's factory prior to the shipment of any system element to the site. Results of the factory tests shall be recorded and submitted for approval before shipment of any panel or panel assembly to the project site.

2. Operational Acceptance Tests

    a. The objective of these tests is to demonstrate that the system of Process Instrumentation and Control is READY for final operation.

b. The I & C System shall be checked for proper installation, adjusted, and calibrated on a loop-by-loop basis to verify that it is ready to function as specified.

c. All system elements shall be checked to verify that they have been installed properly and that all terminations have been made correctly.

d. All discrete elements and systems shall have their set points adjusted and shall be checked for proper operation (e.g., interlock functions, contact closure on rising/falling P.V., etc.).

e. All continuous elements and systems shall have three-point calibrations performed. All controller tuning constants shall be adjusted to preliminary settings.

f. The OPERATIONAL ACCEPTANCE TESTS shall be completed prior to starting the FUNCTIONAL ACCEPTANCE TESTS. The actual testing program shall be conducted in accordance with prior approved procedures and shall be documented as required hereinafter.

3. Functional Acceptance Tests

a. The objective of these tests is to demonstrate that the system of Instrumentation and Controls is operating and complying with the specified performance requirements.

b. A witnessed, FUNCTIONAL ACCEPTANCE TEST shall be performed on the complete system of Instrumentation and Controls. Each function shall be demonstrated to the satisfaction of the ENGINEER on a loop-by-loop and/or paragraph-by-paragraph basis.

c. Each test shall be witnessed and signed off by both the I&C INTEGRATOR and the ENGINEER upon satisfactory completion.

d. The actual testing program shall be conducted in accordance with prior approved procedures and shall be documented as required hereinafter.

e. The I&C INTEGRATOR shall notify the ENGINEER at least 2 weeks prior to the date of the FUNCTIONAL ACCEPTANCE TEST.

**3.07 CLEAN-UP**

A. Keep the premises free from accumulation of waste material or rubbish. Upon completion of work, remove materials, scraps, and debris from premises and from interior and exterior of all devices and equipment. Touch-up scratches, scrapes, or chips in interior and exterior surfaces of devices and equipment with finishes matching as nearly as possible the type, color, consistency and type of surface of the original finish.

## PART 4 LOOP SPECIFICATIONS

### 4.01 LOOP SPECIFICATIONS

A. Control loop requirements shall be as specified in Section 13725 - Loop functions/Programming Strategies/Protocols and as shown by the Drawings.

END OF SECTION

**SECTION 13710**

**PROGRAMMABLE LOGIC CONTROLLER**

## PART 1 GENERAL

### 1.01 WORK INCLUDED

A. Furnish, install, program, and document the Programmable Logic Control (PLC) system(s) including hardware, software, and dead front-mounted operator interface for a complete and functional system as specified herein and shown on the drawings.

B. The new PLC system shall be an integral component of the instrumentation and control system.

C. Provide complete I/O system including racks, power supplies, cables, connectors, terminals, interposing relays, signal conditioners, signal isolators, and the like.

D. Provide equipment and PLC developed files including manuals and disks for proper communication. Include PLC located equipment, interposing equipment, cable (length as required), connectors, and the like. Contractor shall utilize his computer for startup and testing. After successful startup, provide all developed software to the OWNER.

E. Provide programming, field debugging, testing and documentation.

F. In order to establish sole source responsibility for the Instrumentation and Control (I&C) System, the I&C Integrator shall be responsible for systems and subsystems provided.

G. The PLC system shall operate with the local HMI down.

H. All operator settings shall be documented if modified at start-up.

I. Like items of equipment provided hereunder shall be the end products of one manufacturer in order to achieve standardization for appearance, operation and maintenance.

J. See CONDITIONS OF THE CONTRACT and Division 1, GENERAL REQUIREMENTS, which contain information and requirements that apply to the Work specified herein and are mandatory for this project.

### 1.02 RELATED WORK SPECIFIED ELSEWHERE

A. Section 13700 - Process Instrumentation and Controls.

B. Section 13725 - Loop Functions/Programming Strategies/Protocol.

C. Division 16 - Electrical.

### 1.03 SUBMITTALS

A. Provide submittals in accordance with the requirements of Section 01300 - Submittals, and the following:

1. Provide a complete PLC program coordinated with the work specified in these Sections. Provide PLC program with other submittal data.

2. A single I&C supplier shall prepare and submit through the CONTRACTOR, complete and organized program printouts including fully annotated ladder diagrams and reports I/O schedules, I/O addresses, Rack assignments Communication channel/drop assignments. I/O and register assignments shall be provided to allow for a complete system. As a minimum, one spare I/O communications channel shall be provide for future I/O register racks.

3. During the period of preparation of this submittal, the CONTRACTOR shall authorize direct informal liaison between his single I&C Supplier and the ENGINEER for exchange of technical information. As a result of this liaison certain minor refinements and revisions in the systems as specified may be authorized informally by the Engineer, but these shall not alter the scope of the work or cause increase or decrease in the Contract price. During this informal exchange no oral statement by the ENGINEER shall be construed to give formal approval of any component or method, nor shall any statement be construed to grant formal exception to, or variation from these specifications.

4. The original and backup copy of the developed files shall be provided on CD. Electronic copy (CD) shall contain the final, as installed, debugged version of all developed files.

5. PLC programming shall be submitted and approved by ENGINEER prior to implementation.

B. Complete sets of Operation and Maintenance Manuals shall be submitted in accordance with Section 01730 - Operation and Maintenance Data. O & M Manuals shall be provided prior to start-up. Within the manual:

1. Provide copies of submittal data, complete.

2. Provide Engineering shop drawings.

3. Provide print out of final PLC(s) programming.

4. Provide print out of final PLC(s) I/O list.

5. Provide print out of final operator interface parameters.

6. Provide annotated rung, word and bit comments.

7. Provide any and all documentation so that OWNER may modify program.

C. Submit warranty information in accordance with Section 01740 - Warranties and Bonds.

D. As part of the responsibility as assigned by the CONTRACTOR, the PLC System supplier shall prepare and submit through the CONTRACTOR, complete and organized program printouts including fully annotated ladder diagrams and reports, I/O schedules, I/O addresses, Rack assignments, Communication channel/drop assignments.

**1.04 QUALITY ASSURANCE**

A. Equipment software and programming furnished under this specification shall be new and unused, shall be the product of a manufacturer having a successful record of manufacturing and servicing the equipment specified herein for a minimum of five (5) years.

**1.05 WARRANTY**

A. The manufacturer, I&C Integrator and CONTRACTOR shall warrant the equipment being supplied to the OWNER against all defects in

workmanship, programming, and materials for a period of two (2) year(s). Warranty period shall commence on Substantial Completion date as outlined in the GENERAL CONDITIONS. Warranties for all equipment installed under this contract shall run concurrently.

B. The MANUFACTURER's and I&C Integrator warranty period shall run concurrently with the CONTRACTOR's warranty period. No exception to this provision shall be allowed. The CONTRACTOR shall be responsible for proper storage of the equipment so as to remain in an "as shipped" condition. If the equipment remains in storage at the job site for longer than six (6) months, before installation, the CONTRACTOR shall provide factory service personnel for a complete inspection of the equipment. Any work necessary to restore the equipment to an "as shipped" condition will be the responsibility of the CONTRACTOR.

**1.06 DEFINITIONS**

A. The following abbreviations/definitions shall be defined as follows:

1. PLC-HSP = PLC at High Service Pump Area Control Panel, (HSP ACP).

2. PLC-SLUDGE = PLC at Sludge Remote I/O Panel.

B. The following terms shall be defined as follows:

1. I&C Vendor = Shall be same as I&C integrator per Section 13700 - Process Instrumentation and Controls.

**PART 2 PRODUCTS**

**2.01 GENERAL**

A. Provide programmable logic controller (PLC) as manufactured by Allen Bradley and as indicated by the drawings, no equal.

B. System must be able to handle online programming changes without shutting down or impacting process control.

**2.02 POWER SUPPLY**

A. Provide a battery backed power supply sized to power all PLC equipment. Include cables, connectors, and the like, as indicated on drawings.

**2.03 RACKS**

A. Provide full size racks, quantity as required for use with all processor, communications, and I/O cards. Provide a minimum of 3 spare I/O spaces in rack for future I/O or communications cards.

**2.04 PROCESSOR**

A. Provide Allen Bradley Control Logix family as indicated by the drawings.

B. Provide exceptions as indicated by the drawings.

**2.05 I/O MODULES.**

A. Discrete input module shall be 16 point min. with input voltage, 120vac or less. Provide a minimum of 2 modules in racks.

B. Discrete output modules shall be 16 point min. with output voltage, 120vac or less. Provide slave relays for each DO point for control of remote equipment. Provide a minimum of 2 modules in racks.

C. Analog input modules shall be 4 point, 24 vDC, 4-20 mADC, isolated. Provide a minimum of 2 modules in racks.

D. Analog output modules shall be 4 point, 24 vDC, 4-20 mADC, isolated, self powered. Provide a minimum of 1 module in racks.

E. Interposing relays or other required modules shall be provided as required to isolate the PLC from sensed or controlled equipment.

F. Refer to drawings. Provide all I/O as indicated. Add additional I/O as required for a complete and functional system. Provide total 25 % spare I/O of each type used, including panel surge arrester wired to labeled terminals for future use.

**2.06 COMMUNICATION MODULE**

A Provide communications module as indicated by the drawings.

**2.07 OPERATOR INTERFACE (INDUSTRIAL PC)**

A. Local HMI workstation(s) shall minimally include the following:

1. Phoenix Contact Industrial PC Product Model Number 2913108, or current equal.

   a. 21.5" backlit integrated LCD Touch Screen

   b. Storage: 80GB Solid State Drive

   c. Processor: 1.6GHz Intel Atom, Enhanced CPU

   d. Memory: 2GB, DDR SODIMM

   e. I/O: 2 Serial ports, 1 Parallel, 4 USB 2.0 ports, 2 Gigabit LAN ethernet ports.

   f. Power: 24 VDC ∀ 20%

   g. Operating System: Windows 7, 64-bit, English

   h. Mounting: Panel Mount

   i. Other equipment as may be required

B. Unit shall be front panel mounted or deadfront panel mounted as indicated on drawings.

**2.08 OPERATOR INTERFACE SOFTWARE**

A. The following software shall be installed on the operator interface (Industrial PC):

1. VT Trihedral SCADA Software, or equal.

2. OWNER shall be named in all software licenses.

3. Software shall include development package.

4. Include all necessary drivers and appurtenant software.

5. Minimum I/O tag count shall be 500.

B. Software shall communicate with specified Allen-Bradley Control Logix PLC.

C. Refer to drawings for additional information.

**2.09 INDUSTRIAL ETHERNET SWITCHES**

A. Provide WAGO 852112, or equal.

B. Provide units per the drawings as a minimum.

C. Provide all ancillary equipment and connectors as may be required.

**2.10 PLC SYSTEM SPARE PARTS**

A. Furnish the manufacturer's recommended spare parts including at least the following:

1. None required.

B. All parts shall be furnished in containers which are clearly marked and identified as to the contents.

C. Provide spare parts bill of materials with submittals for approval.

**PART 3 EXECUTION**

**3.01 PLC I/O SCHEDULE**

A. Provide PLC I/O schedule.

Refer to the P&I diagram, schematic diagrams and control strategies. Provide I/O per these requirements.
DI denotes Discrete Input
DO denotes Discrete Output
AI denotes Analog Input
AO denotes Analog Output

**3.02 PROGRAMMING STRATEGIES, GENERAL REQUIREMENTS**

A. Provide all programming to fully implement the following control strategies to produce output and receive input from the instrumentation and control system.

B. Programming strategies shall be as specified in Section 13725.

**3.03 LOCAL HMI HARDWARE AND PROGRAM**

A. All local HMI hardware and programming shall be provided by the I&C Vendor.

B. Provide all programming and software configuration of the local HMI program to implement the requirements for a complete and functional system as specified herein and shown on drawings.

C. General programming shall include but not be limited to the following:

1. Graphic display of all discrete and analog data.
2. Reporting of all discrete and analog data.
3. Alarm reception and acknowledgment of the alarms.

D. Refer to the programming strategies in Section 13725.

**3.04 DOCUMENTATION**

A. Include fully annotated ladder diagrams and other reports in the O&M manuals reflecting final corrections. Other required reports shall include but not be limited to bit, word, timer, counter, and memory usage reports.

B. Provide the typewritten program description from the I&C Vendor in the O&M manuals. Include in the description the program name, date, preparer/programmer, preparing company, etc. Include the overall structure and function of the program in the processing section of the description. Describe the program run stream and a detailed description of how the program operates. Describe input and output elements.

C. Describe how fault sensing is achieved and the actions required from operators to acknowledge or clear faults.

D. After successful software start up the I&C Vendor shall deliver to the OWNER all corrected ladder diagrams and reports as listed above as part of the O&M manuals. I&C Vendor shall also provide to the OWNER on disk all annotated, developed files. The OWNER becomes the Owner of such files.

**3.05 TESTING**

A. Shop simulate programming before downloading to the PLC. Check elements of the program in the presence of the ENGINEER and to the ENGINEER=s satisfaction. The I&C Vendor shall provided programmers on site with instrument technicians for the purposes of startup and testing of the system software.

**3.06 I&C INTEGRATOR FIELD SERVICES**

A. The services of a factory-trained service engineer who is specifically trained on the type of equipment herein specified shall be provided for the period(s) specified below during construction to assist the CONTRACTOR. Upon completion of the installation, the services of the above service engineer shall be provided for the minimum periods specified below for modifications and start-up of the equipment. The minimum days specified below do not relieve the Instrumentation Vendor from providing sufficient service to place the system into satisfactory operation.

| Event | Duration (Minimum) |
|---|---|
| Construction/Installation Assistance | One (1) Eight (8) Hour Man Days |
| PLC System(s) Startup/Modifications | Two (2) Eight (8) Hour Man Days |
| OWNER Personnel Instruction | One (1) Eight (8) Hour Man Days |

B. No form of energy shall be turned on to any part of the instrumentation system prior to receipt by the ENGINEER of a certified statement of approval of the installation from the CONTRACTOR containing his supplier's authorization for energizing the system.

C. A factory trained service engineer shall be provided for placing the system into operation. After the system is being operated by the OWNER's personnel, the service engineer shall return for instruction course in the maintenance and operation of the system.

END OF SECTION

**SECTION 13711**

**EXISTING SCADA SYSTEM MODIFICATIONS**

## PART 1 GENERAL

### 1.01 WORK INCLUDED

A. The CONTRACTOR shall coordinate and furnish all labor and materials to modify the existing SCADA System including all hardware and programming revisions for a complete and functional system. Modification(s) shall include:

1. Addition of RTU's, remote I/O panels, new PLC's, new hardware and software as specified herein and shown on drawings.

B. Provide all equipment and re-developed PLC software files including manuals and disks for proper communication. Include all PLC located equipment, PC located equipment, interposing equipment, cable (length as required), connectors and the like. CONTRACTOR shall utilize his computer for startup and testing. After successful startup, all re-developed software shall be provided to the OWNER. PLC software and SCADA software shall be loaded onto the OWNER=s computers. Backup copies of all developed files shall be provided to OWNER on CD.

C. All programming, field debugging and testing shall be provided.

D. In order to establish sole source responsibility for the Instrumentation and Control (I&C) System, the CONTRACTOR shall be responsible for all systems and subsystems provided and coordination of work completed by I&C Integrator.

E. SCADA node package for East Industrial SCADA computer shall be Trihedral VT SCADA, latest version.

F. Provide SCADA development of new East Booster Station screens (I/O, status and alarms) at Main WTP SCADA system.

G. Like items of equipment provided hereunder shall be the end products of one manufacturer in order to achieve standardization for appearance, operation and maintenance.

H. See CONTRACT CONDITIONS and Division 1, GENERAL REQUIREMENTS, which contain information and requirements that apply to the Work specified herein and are mandatory for this project.

### 1.02 RELATED WORK SPECIFIED ELSEWHERE

A. Section 13700 - Process Instrumentation and Controls.

B. Section 13725 - Loop Functions/Programming Strategies/Protocol.

### 1.03 SUBMITTALS

A. Submittals shall be made in accordance with the requirements of Section 01300 - Submittals.

1. It is incumbent upon the CONTRACTOR to coordinate the work specified in these Sections so that a complete SCADA program will be provided.

2. As part of the responsibility as assigned by the CONTRACTOR, the PLC/RTU System supplier shall prepare and submit through the CONTRACTOR, complete and organized program printouts including

fully annotated ladder diagrams and reports, I/O schedules, I/O addresses, Rack assignments, Communication channel/drop assignments.

3. During the period of preparation of this submittal, the CONTRACTOR shall authorize direct informal liaison between his single I&C Integrator and the ENGINEER for exchange of technical information. As a result of this liaison certain minor refinements and revisions in the systems as specified may be authorized informally by the ENGINEER, but these shall not alter the scope of the work or cause increase or decrease in the Contract price. During this informal exchange no oral statement by the ENGINEER shall be construed to give formal approval of any component or method, nor shall any statement be construed to grant formal exception to, or variation from these specifications.

4. The original and backup copy of the developed files shall be provided on CD-Rom.

B. Complete sets of Operation and Maintenance Manuals shall be submitted in accordance with Section 01730 - Operation and Maintenance Data. O & M Manuals shall be provided prior to start-up.

1. Manuals shall contain copies of submittal data.

2. Manuals shall contain all Engineering shop drawings with all field modification revisions.

3. Provide print out of final SCADA database programming.

4. Provide print out of final SCADA database I/O list.

5. Provide print out of final operator interface parameters.

C. Warranty information shall be submitted in accordance with Section 01740 - Warranties and Bonds.

**1.04 QUALITY ASSURANCE**

A. Work specified herein shall be performed by the same I&C Integrator as listed in Section 13700.

**1.05 WARRANTY**

A. The CONTRACTOR shall warrant all equipment and programming for a period of two (2) year(s) from the date of project substantial completion.

## PART 2 PRODUCTS

### 2.01 PLC SYSTEM

A. PLC systems are based on Allen-Bradley Micrologix family of components per Section 13710.

B. New field wiring terminations for new field equipment and instrumentation shall be as shown on the drawings and field coordinated with the approved shop drawings.

C. All PLC programming shall be provided using existing system software in agreement with the OWNER=s copy.

### 2.02 EXISTING COMPUTER OPERATOR INTERFACE

A. Existing computer hardware and software systems shall be replaced with programming modifications as specified herein.

### 2.03 SCADA NODE LICENSE

A. Provide a Trihedral VT SCADA XXX I/O Tag Count SCADA Node updated license for each site(s).

B. Client license shall be registered in OWNER=s name.

C. Client license shall match capabilities of existing SCADA software.

D. I/O SCADA database shall reside in the _____.

E. All SCADA programming at WTP site shall be provided using Trihedral VT SCADA software in agreement with the Phase III WTP Improvements project. Copies shall be loaded onto the development, runtime, and client computers.

F. Provide backup of all developed files on CD.

### 2.04 SPARE PARTS

A. Furnish the following spare parts:

1. None required.

B. All parts shall be furnished in containers which are clearly marked and identified as to the contents.

**C.** Provide spare parts bill of materials with submittals for approval.

## PART 3 EXECUTION

### 3.01 PLC I/O SCHEDULE

A. Provide SCADA Database I/O schedule.

Refer to the P&I diagram, schematic diagrams and control strategies. Provide I/O per these requirements.
DI denotes Discrete Input
DO denotes Discrete Output
AI denotes Analog Input
AO denotes Analog Output

### 3.02 PLC PROGRAMMING STRATEGIES, GENERAL REQUIREMENTS

A. Existing PLC(s) programming shall be modified to meet the functional requirements specified in Section 13725 - Loop Functions, Programming Strategies/Protocol.

## 3.03 COMPUTER OPERATOR INTERFACE AND PLC MODIFICATIONS (WTP SCADA HMI)

A. Provide all programming and software modifications of the existing WTP SCADA HMI program to implement the requirements for a complete and functional system as specified herein and shown on drawings.

B. General programming shall include but not be limited to the following:

1. Graphic display of all new and existing discrete and analog data.
2. Reporting of all new and existing discrete and analog data.
3. Alarm reception and acknowledgment of the new and existing alarms.
4. Control output of data from central computer to PLC-1 per P&I diagram and these specifications.
5. Software modifications shall be similar to and consistent with the existing computer operator interface.

C. Specific function revisions shall be as follows:

1. Functional requirements specified in Section 13725 - Loop Functions/Programming Strategies/Protocol.

## 3.04 DOCUMENTATION

A. Fully annotated ladder diagrams, screen design graphics and other reports and documentation shall be included in the O&M manuals reflecting final corrections. Other required reports shall include but not be limited to bit, word, timer, counter and memory usage reports.

B. The CONTRACTOR shall provide the typewritten program description in the O&M manuals. The description shall include the program name, date, preparer/programmer, preparing company etc. The processing section of the description shall include the overall structure and function of the program. Describe the program run stream and a detailed description of how the program operates. Describe all input and outputs elements.

C. Describe how fault sensing is achieved and the actions required from operators to acknowledge or clear faults.

D. After successful software start up the CONTRACTOR shall deliver to the OWNER all corrected ladder diagrams and reports as listed above as part of the O&M manuals. CONTRACTOR shall also provide to the OWNER on disk all annotated, developed files. The OWNER becomes the Owner of such files.

## 3.05 TESTING

A. All programming shall be shop simulated as much as possible before downloading to the existing systems. All elements of the program shall be checked in the presence of the ENGINEER and to his satisfaction. The CONTRACTOR shall provide programmers on site with instrument technicians for the purposes of startup and testing of the system software.

B. A minimum of five (5) man day(s) at each facility shall be provided for on-site testing.

## 3.06 START UP MODIFICATIONS

A. Programming modifications may be required during startup per the OWNER/ENGINEER=S requirements.

B. Provide an additional one (1) man day(s) of programming time at each site for these changes. These man days shall be in addition to time for changes required by Contract scope.

END OF SECTION

**SECTION 13712**

**LOCAL HMI SYSTEM DEVELOPMENT**

## PART 1 GENERAL

### 1.01 WORK INCLUDED

A. The CONTRACTOR shall coordinate and furnish all labor and materials for the local HMI and PLC System including all hardware and programming for a complete and functional system.

B. Provide all equipment and HMI and PLC software files including manuals and disks for proper communication. Include all PLC located equipment, interposing equipment, cable (length as required), connectors and the like. CONTRACTOR shall utilize his computer for startup and testing. After successful startup, all re-developed software shall be provided to the OWNER. PLC software and HMI shall be loaded onto the OWNER=s computers. Backup copies of all developed files shall be provided to OWNER on CD.

C. All programming, field debugging and testing shall be provided.

D. In order to establish sole source responsibility for the Instrumentation and Control (I&C) System, the CONTRACTOR shall be responsible for all systems and subsystems provided and coordination of work by I&C INTEGRATOR.

E. Like items of equipment provided hereunder shall be the end products of one manufacturer in order to achieve standardization for appearance, operation and maintenance.

F. See CONTRACT CONDITIONS and Division 1, GENERAL REQUIREMENTS, which contain information and requirements that apply to the Work specified herein and are mandatory for this project.

### 1.02 RELATED WORK SPECIFIED ELSEWHERE

A. Section 13700 - Process Instrumentation and Controls.

B. Section 13710 - Programmable Logic Controller.

C. Section 13725 - Loop Functions/Programming Strategies/Protocols.

D. Section 13751 - RTU Sub System.

E. Section 13752 - Computers and Accessories.

### 1.03 SUBMITTALS

A. Submittals shall be made in accordance with the requirements of Section 01300 - Submittals.

1. It is incumbent upon the CONTRACTOR to coordinate the work specified in these Sections so that a complete PLC and local HMI program will be provided. PLC program shall be provided with other submittal data.

2. During the period of preparation of this submittal, the CONTRACTOR shall authorize direct informal liaison between their I&C Integrator and the ENGINEER for exchange of technical information. As a result of this liaison certain minor refinements and revisions in the systems as specified may be authorized informally by the

ENGINEER, but these shall not alter the scope of the work or cause increase or decrease in the Contract price. During this informal exchange no oral statement by the ENGINEER shall be construed to give formal approval of any component or method, nor shall any statement be construed to grant formal exception to, or variation from these specifications.

3. The original and backup copy of the developed files shall be provided on CD-Rom.

B. Submit proposed HMI screen designs for approval prior to implementation.

C. Warranty information shall be submitted in accordance with Section 01740 - Warranties and Bonds.

**1.04 QUALITY ASSURANCE**

A. Work specified herein shall be performed by the same I&C Integrator as listed and completing the work specified in Section 13700.

**1.05 WARRANTY**

A. The CONTRACTOR shall warrant all equipment and programming for a period of two (2) year(s) from the date of project final completion.

**PART 2 PRODUCTS**

**2.01 LOCAL HMI**

A. Local HMI components specified with the PLC system. Refer to Section 13710.

B. Operator work station HMI components are specified in Section 13752 - Computers and Accessories.

**2.02 SPARE PARTS**

A. Furnish the manufacturer's recommended spare parts including at least the following:

1. None required.

B. All parts shall be furnished in containers which are clearly marked and identified as to the contents.

C. Provide spare parts bill of materials with submittals for approval.

**PART 3 EXECUTION**

**3.01 I/O SCHEDULE**

A. Provide I/O schedule.

Refer to the P&I diagram(s), schematic diagrams and control strategies.
Provide I/O per these requirements.
DI denotes Discrete Input
DO denotes Discrete Output
AI denotes Analog Input
AO denotes Analog Output

**3.02 LOCAL SCADA HMI (GENERAL)**

A. Provide all programming and software configuration of the new PLC(s) local HMI program to implement the requirements for a complete and

functional system as specified herein and shown on drawings for the following:

1. All new operator interface locations.

B. General programming shall include but not be limited to the following:

1. Graphic display of all discrete and analog data.
2. Reporting of all discrete and analog data.
3. Alarm reception and acknowledgment of the alarms.

**3.03 LOCAL SCADA HMI (VILLAGE CONVENTIONS)**

A. HMI Color and Wording Conventions

| Equipment Status/Condition | Color | Descriptor | Comments |
|---|---|---|---|
| Off in Hand | Red | Off | In this condition, the equipment can only be controlled locally from the control panel |
| On in Hand | Green | Running | In this condition, the equipment can only be controlled locally from the control panel |
| Fault in Hand | Yellow | Failed | |
| Off in Remote | Red | Off | In this condition, the equipment is in auto and can be controlled from the HMI |
| On in Remote | Green | Running | In this condition, the equipment is in auto and can be controlled from the HMI |
| Closed in Hand | Red | Closed | In this condition, the equipment can only be controlled locally from the control panel |
| Open in Hand | Green | Open | In this condition, the equipment can only be controlled locally from the control panel |
| Fault in Hand | Yellow | Failed | |
| Closed in Remote | Red | Closed | In this condition, the equipment is in auto and can be controlled from the HMI |
| Open in Remote | Green | Open | In this condition, the equipment is in auto and can be controlled from the HMI |
| Fault in Remote | Yellow | Failed | |
| When Valve Opening or Closing | Magenta | Transition | |

B. PLC tags shall use the I-drawings as the reference for the tag names.

Example: Pump with the name P-1120-1:

1. P-1120-1-Status for Run status
2. P-1120-1-Fault for the Fault status
3. P-1120-1-Auto for Auto/Manual status
4. P-1120-1-Remote for Local/Remote status

C. HMI screen format examples. The navigation bar is on top and the alarm summary is on the bottom of the screen.

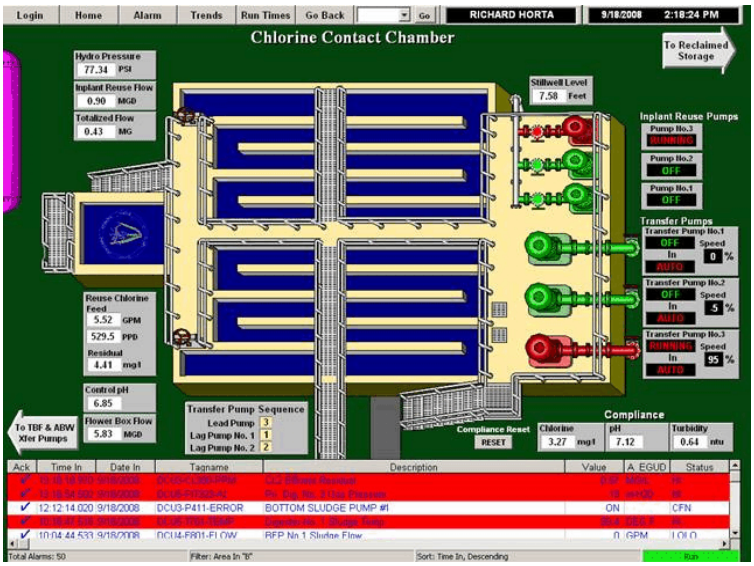


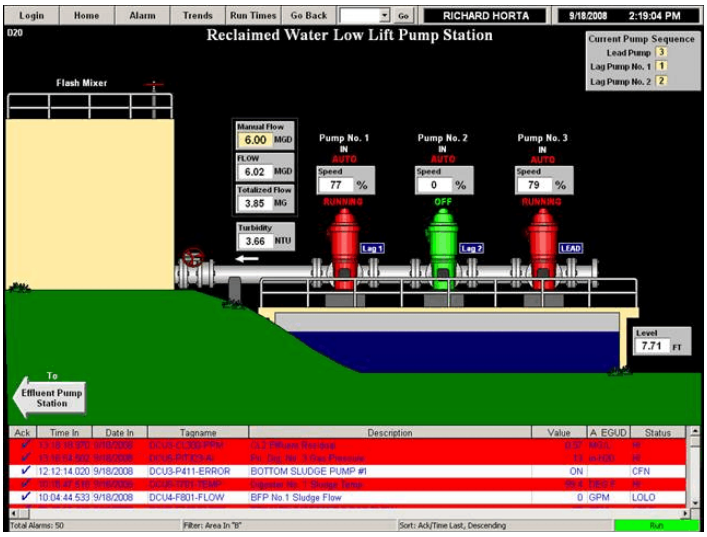


## 3.04 DOCUMENTATION

A. Fully annotated screen design graphics and other reports and documentation shall be included in the O&M manuals reflecting final

corrections. Other required reports shall include but not be limited to bit, word, timer, counter and memory usage reports.

B. The CONTRACTOR shall provide the typewritten program description in the O&M manuals. The description shall include the program name, date, preparer/programmer, preparing company etc. The processing section of the description shall include the overall structure and function of the program. Describe the program run stream and a detailed description of how the program operates. Describe all input and outputs elements.

C. Describe how fault sensing is achieved and the actions required from operators to acknowledge or clear faults.

D. After successful software start up the CONTRACTOR shall deliver to the OWNER all corrected ladder diagrams and reports as listed above as part of the O&M manuals. CONTRACTOR shall also provide to the OWNER on disk all annotated, developed files. The OWNER becomes the OWNER of such files.

**3.05 TESTING**

A. All programming shall be shop simulated as much as possible before downloading to the PLC. All elements of the program shall be checked in the presence of the ENGINEER and to his satisfaction. The CONTRACTOR shall provide programmers on site with instrument technicians for the purposes of startup and testing of the system software.

**3.06 START UP MODIFICATIONS**

A. Programming modifications may be required during startup per the VILLAGE/ENGINEER=S requirements.

END OF SECTION

**SECTION 13725**

**LOOP FUNCTIONS/PROGRAMMING STRATEGIES/PROTOCOL**

## PART 1 GENERAL

### 1.01 WORK INCLUDED

A. This Section covers the instrumentation loop functions, PLC, RTU, and HMI programming strategies and protocols.

B. In order to establish sole source responsibility for the Instrumentation and Control (I&C) System, the I&C vendor/subcontractor shall be responsible for systems and subsystems provided.

C. This specification section shall define the general programming parameters for HMI improvements.

D. All operator settings shall be documented as modified at start-up.

E. See CONDITIONS OF THE CONTRACT and Division 1, GENERAL REQUIREMENTS, which contain information and requirements that apply to the Work specified herein and are mandatory for this project.

### 1.02 RELATED WORK SPECIFIED ELSEWHERE

A. Section 01010 - Summary of Work.

B. Section 13700 - Process Instrumentation and Controls.

C. Section 13710 - Programmable Logic Controllers.

D. Section 13712 - Local HMI System Development.

E. Section 13751 - RTU Subsystem.

F. Section 13752 - Computers and Accessories.

### 1.03 DEFINITIONS

A. The following abbreviations/definitions shall be defined as follows:

1. DI = Discrete Input
2. DO = Discrete Output
3. AI = Analog Input
4. AO = Analog Output
5. HMI = Human Machine Interface
6. RTU = Remote Telemetry Unit with Programmable Logic Controller (PLC)

### 1.04 LOOP SPECIFICATION FORMAT

A. General

1. The P & Ids and these Specifications are not intended to completely depict all of the functional requirements of the control systems provided under this Section. The filter system supplier shall provide all instrumentation and controls necessary to provide safe and operable systems. The specific control systems proposed shall be subject to the review and approval of the ENGINEER.

B. "Functions" specify the functional performance of the loop and includes a description of any functional interlocks to be provided by the I&C

subcontractor. For more precise information on a loop's functional interlocks, refer to the Drawings.

C. "Components" specify the major components to be provided for a loop. Each component is identified by three pieces of information: tag number, component identification code and component name and options.

D. Tag numbers example HS-1-2-3C

HS = Instrumentation designation: Hand Switch
1 = Unit Process Number

2 = Loop Number
3 = Unit or Item Number
C = Sequential Modifier: Switch Location C

Tag numbering is further defined on the drawings.

E. Component identification code is an alphanumeric code used to reference a particular component specification within this section.

F. Component name and options are listed as required for each specific requirement. One particular nomenclature has been used to define the action of discrete devices about their set points.

"Rising" - in reference to a set point means that the contacts are closed for all process variable values above that point.

"Falling"- in reference to a set point means that contacts are closed for all process variable values below that point.

**1.05 PROGRAMMING STRATEGIES, GENERAL REQUIREMENTS**

A. Provide all programming to fully implement the following control strategies to produce output and receive input from the instrumentation and control system.

**1.06 SUBMITTALS**

A. Submittals shall be in accordance with Section 01300 - Submittals.

B. Provide submittal to demonstrate understanding and completion of the work covered by this section.

C. Submittal shall include proposed HMI screens for ENGINEER/OWNER review and approval.

**PART 2 PRODUCTS**

**2.01 INSTRUMENTATION AND SCADA SYSTEM COMPONENTS**

A. Instrumentation components shall be as specified in Section 13700 - Process Instrumentation and Controls.

B. PLC components shall be as specified in Section 13710 – Programmable Logic Controller.

C. RTU components shall be as specified in Section 13751 - RTU Subsystem.

**PART 3 EXECUTION**

**NOT USED**

**PART 4 LOOP FUNCTIONS/PROGRAMMING STRATEGIES/PROTOCOL**

**4.01 DUPLEX WASTEWATER PUMPING (EXISTING CONTROL PANEL)**

A. Field Functions:

1. Existing duplex PS control panel shall remain and all functions shall remain except as modified herein below.

2. Modify existing systems to incorporate/interface with new RTU.

3. Provide RTU power supply and other components to meet all function requirements.

4. Provisions shall be made for the following system monitoring functions:

a. Provide continuous 4-20 mA DC signal to RTU from level transmitter (LT) corresponding wet well level.

b. Provide continuous 4-20 mA DC signal to RTU from Pump No. 1 current transmitter (IIT-1) corresponding to pump amperage draw.

c. Provide continuous 4-20 mA DC signal to RTU from Pump No. 2 current transmitter (IIT-2) corresponding to pump amperage draw.

5. Provisions shall be made for the following future system monitoring functions:

a. Provide continuous 4-20 mA DC signal to RTU from future combustible gas detector (CGD) corresponding to percent LEL in wet well.

B. Field Components:

| Tag Number | Component Identification Code | Component Name and Options |
|---|---|---|
| RTU BKR | M7 | RTU Breaker 20 Amp |

| Tag Number | Component Identification Code | Component Name and Options |
|---|---|---|
| LT | L16 | Radar Level Sensor<br>Range: Depth of Wet well |
| GFM(2) | M7 | Ground Fault Monitor |
| IIT-(2) | M7 | Current Transmitter (Amps) |

C. RTU Strategies:

1. Constant Speed Pump(s) Operation

a. Pump(s) shall start when pump(s) call signal is received from RTU after a time delay. This will be considered normal operation based on wet well level.

   Pump(s) shall be stopped when pump(s) call signal is discontinued from RTU after a time delay.

b. Backup float actuated operation shall be provided by existing local control panel.

2. System Status and Faults (Normal via SCADA)

a. When discrete signal is received at RTU from PM following a time delay, a phase monitor alarm shall be issued to existing SCADA network via RTU.

b. When discrete signal is received at RTU from MS-1 or MS-2 of pump(s) on following a time delay, a pump(s) run shall be issued to existing SCADA network via RTU.

c. When discrete signal is received at RTU from CR4 of high high wet well level following a time delay, a high high wet well level shall be issued to existing SCADA network via RTU.

d. When a discrete signal is received at RTU from CR51 (overtemp), SFR1 (seal failure), or CR8 (ground fault) following a time delay, the individual alarm shall be issued to existing SCADA network via RTU.

   Upon receipt of overtemp, seal fault, or ground fault signal, Pump shall be removed from ready status and not allowed to run. Pump shall return to ready status and allowed to run after the overtemp and ground fault discrete signal has been discontinued.

e. When a discrete signal is received at RTU from CR52 (overtemp), SFR2 (seal failure), or CR9 (ground fault) following a time delay, the individual alarm shall be issued to existing SCADA network via RTU.

   Upon receipt of overtemp, seal fault, or ground fault signal, Pump shall be removed from ready status and not allowed to run. Pump shall return to ready status and allowed to run after the overtemp and ground fault discrete signal has been discontinued.

f. When discrete signal is received at RTU from intruder switch(s) ZS following a time delay, an intruder alarm signal shall be issued to existing SCADA via RTU. Intruder alarm shall be reset by one of the following actions:

   i. Signal from intruder switch(s) is discontinued.

   ii. Acknowledgment of alarm via the existing SCADA network.

g. RTU shall receive and monitor 4-20 mA DC signal from the following devices:

| **Tag** | **Variable** |
|---|---|
| LT | Water Level in Wet well |
| IIT-1 | Pump No. 1 Current Draw |
| IIT-2 | Pump No. 2 Current Draw |

Continuous analog signal corresponding to the variables shall be issued to existing SCADA network via RTU.

h. RTU shall receive and monitor 4-20 mA DC signal from the following future devices:

| Tag | Variable |
|---|---|
| CGD | Percent LEL in Wet well |

Continuous analog signal corresponding to each of these variables shall be issued to existing SCADA network via RTU.

i. When discrete signal is received from CR01 on loss of RTU panel power following a time delay, a loss of RTU power alarm shall be issued to existing SCADA network via RTU.

j. RTU shall monitor position of each pump H-0-A switch. When switch is in auto, a switch in auto position shall be issue to existing SCADA network via RTU.

k. RTU shall internally monitor its own diagnostic protocols. When any of these protocols are out of specification following a time delay, a RTU trouble signal shall be issued to existing SCADA network via RTU. Signal shall be discontinued when condition is corrected.

D. Internal RTU Program Adjustable Software Values.

| Description | Range, Initial Setting |
|---|---|
| 1. Pump start/stop time delay | 0-60 sec, 10 sec |
| 2. RTU Fault Output time delay | 0-60 sec, 30 sec |
| 3. RTU Fault Reset Time Delay | 0-60 sec, 30 sec |
| 4. Other display/parameter elements shall Be provided as required. | |

E. HMI

1. Provide all programming and software modifications for the existing SCADA HMI program to implement the requirements for a complete and functional system as specified herein and shown on drawings.

2. General programming shall include but not be limited to the following:

a. Graphic display of all new and existing discrete and analog data.
b. Reporting of all new and existing discrete and analog data.
c. Alarm reception and acknowledgment of the new and existing alarms.
d. Control output of data from central computer to RTU=s per P&I diagram and these specifications.

3. Specific Functions shall be as follows:

a. General Alarm Logging and Reset.

i. Log all alarm received.
ii. Display all received alarms, graphically.
iii. Provide alarm acknowledgment.

b. Provide display and alarm function of all alarms and faults indicated on drawing(s) and specified herein.

c. Provide and display status indication for pump(s). This shall include running non-resettable runtime total.

d. Provide and display variable (analog) status functions.

i. Functions shall be shown graphically and numerically.
ii. Daily totalizer shall be provided for flow variable. Totalizer shall reset to zero at midnight and transfer total daily value to previous day reading.
iii. Provide for all analogs indicated on P&ID drawings.

e. Trending and Record keeping

i. All data (analog) and events (alarm and status) shall be stored for trending and records.

f. Sewage Pump Auto/Manual/Off Control

An auto/manual/off selector shall be provided for each pump.

Manual
i. When manual mode is selected, additional on-screen start/stop functions will appear.
ii. Operator can use the pump start/stop command to control selected pump(s) via SCADA.

Auto Mode
i. When auto mode is selected, additional on-screen start/stop functions will appear.
ii. Operator shall input RTU operational level setpoints for ALead Pump Start@; ALag Pump Start@; AHigh Level Alarm@; AAll Pumps Off@.

Off Mode
i. When off mode is selected, no additional screens will appear and no commands will be issued.

g. Wet well Level Status Monitoring
i. Operator can enter a setpoint for level. The SCADA system will alarm output AWARNING WET WELL LEVEL APPROACHING OVERFLOW CONDITION@.
ii. When level is exceeded, alarm will be issued.
iii. When level drops below setpoint, alarm output will be discontinued after time delay.

h. The following adjustable parameters shall be provided at SCADA HMI:

| Description | Range, Initial Setting |
|---|---|
| i. Lead Pump Start | Wet well Depth (Ft), TBD |
| ii. Lag Pump Start | Wet well Depth (Ft), TBD |
| iii. All Pumps Off | Wet well Depth (Ft), TBD |
| iv. High Level Alarm | Wet well Depth (Ft), TBD |
| v. Warning Wet well Level Approaching Overflow Condition | Wet well Depth (Ft), TBD |

**4.02 DUPLEX WASTEWATER PUMPING (WITH NEW CONTROL PANEL)**

A. Field Functions:

1. Provide hand/off/auto for each pump. Operation is same for each pump.

   In hand mode, pump runs.

   In off mode, pump will not run.
   In auto mode, pump runs as directed by RTU logic per drawings. Level control for pump operation shall be via level transmitter. Lead pump position shall alternate on each pump stop condition.

   Pump can be remotely started as directed by RTU when hand switch is in the auto position only.

2. Pump run status, RL-X, pump run time, ETM-X, and pump starts (cycle count, KKI-X) shall be indicated. Pump run status shall also be provided to RTU.

3. Receive a discrete signal on over-temperature from pump manufacturer=s internal temperature switch. Indicate pump overtemp, OT-X locally. Over temperature alarm shall also be issued to RTU. Signal shall discontinue once condition has cleared.

4. Receive a discrete signal on seal failure from pump manufacturer=s seal failure module (SFM-X). Indicate pump seal failure locally. Seal failure alarm shall also be issued to RTU. Signal shall discontinue once condition has cleared.

5. Receive a discrete signal from FS2 on high high level in wet well and locally indicate high high level visually (HLA) and audibly (AH). High high level alarm shall also be issued to RTU.

   Provide pushbutton reset to silence local alarm.

   Float shall be self-resetting and output signals shall discontinue on reset.

   High level alarm float shall also backup start the pumps.

6. Receive a discrete signal from FS1 on low low level in wet well.

   Low low level float shall also backup stop both pumps.

7. Receive a discrete signal on ground fault from ground fault monitor and locally indicate. Ground fault alarm shall also be issued to RTU. Signal shall discontinue once condition has cleared.

8. Upon opening of front panel door, intruder alarm switch ZS shall provide a discrete signal to RTU. System shall reset upon closing door which opens CR7.

9. Provide fluorescent courtesy lamp, convenience outlet, all indicated breakers, relays, terminal strips, wiring, power supplies, wire duct, lightning arrestor, surge capacitor, fuses, control power transformer, RTU power supply, and other components to meet all function requirements. Refer to 3-line diagrams and control schematics in drawings.

10. Monitor phase of normal and emergency power supply. When any power leg is out of phase, indicate locally, interrupt controls and stop pump(s). Phase monitor shall auto reset. Power supply to control panel shall be as indicated on drawings. Phase failure indication shall also be provided to RTU.

    Discontinue discrete signal to RTU on phase monitor reset.

11. Provisions shall be made for the following system monitoring functions:

    a. Provide continuous 4-20 mA DC signal to RTU from level transmitter (LT) corresponding wet well level.

    b. Provide continuous 4-20 mA DC signal to RTU from Pump No. 1 current transmitter (IIT-1) corresponding to pump amperage draw.

    c. Provide continuous 4-20 mA DC signal to RTU from Pump No. 2 current transmitter (IIT-2) corresponding to pump amperage draw.

12. Provisions shall be made for the following future system monitoring functions:

    a. Provide continuous 4-20 mA DC signal to RTU from future combustible gas detector (CGD) corresponding to percent LEL in wet well.

B. Field Components:

| Tag Number | Component Identification Code | Component Name and Options |
|---|---|---|
| GR | M7 | Generator Receptacle |
| LA | M7 | Lightning Arrestor |
| SC | M7 | Surge Capacitor |
| MS(2) | M7 | Pump Motor Starter w/Solid State Overload |
| CCB | M7 | Control Circuit Breaker 20 Amp |
| DRB | M7 | Duplex Receptacle Breaker 20 amp |
| RTU | M7 | RTU Breaker 20 Amp |
| GFDR | M7 | Ground Fault Duplex Receptacle |
| PM | M7 | Phase Monitor |
| AL1 | M7 | Indicator Light, Amber = Fail |
| HS(2) | M7 | Selector Switch (Hand/Off/Auto) |
| ETM(2) | M7 | Elapsed Time Meter |
| RL(2) | M7 | Indicator Light, Green = Run |

| | | |
|---|---|---|
| MB(2) | M7 | Pump Motor Breaker (Amperage Rating indicated on drawings) |

| | | |
|---|---|---|
| MCB/ECB | M7 | Main and emergency circuit breakers w/mechanical interlock (amperage ratings indicated on drawings) |

| Tag Number | Component Identification Code | Component Name and Options |
|---|---|---|
| FL | M7 | Fluorescent Lamp |
| CPT | X1 | Control Power Transformer (480 volt panels only) |
| FS2 | L8 | Float Switch, Rising |
| FS1 | L8 | Float Switch, Falling |
| ISR1,2 | M7 | Intrinsically Safe Relay |
| FLA | M7 | Flasher |
| HLA | M7 | High Level Alarm, Globe Type |
| ASB | M7 | Pushbutton, Black |
| AH | M7 | Alarm Horn |
| AUX | M7 | Auxiliary Breaker 20 amp (where noted on drawings only) |
| KKI(2) | M7 | Pump Cycle Counter |
| ALT | M7 | Duplex Alternator |
| SFM(2) | | Seal Fail Module |
| OT-(2) | M7 | Indicator Light, Red = Overtemp |
| SF(2) | M7 | Indicator Light, Red = Seal Fail |
| ZS | Z1 | Intrusion Switch |
| IT | X1 | Isolation Transformer 120V:24V |
| GF-(2) | M7 | Indicator Light, Red = Ground Fault |
| LT | L16 | Submersible Level Transmitter Range: Depth of Wet well |
| GFM(2) | See Drawings | Ground Fault Monitor |
| IIT-(2) | See Drawings | Current Transmitter (Amps) |

C. RTU Strategies:

1. Constant Speed Pump(s) Operation

a. Pump(s) shall start when pump(s) call signal is received from RTU after a time delay. This will be considered normal operation based on wet well level.

Pump(s) shall be stopped when pump(s) call signal is discontinued from RTU after a time delay.

b. Backup float actuated operation shall be provided by local control panel.

2. System Status and Faults (Normal via SCADA)

a. When discrete signal is received at RTU from PM following a time delay, a phase monitor alarm shall be issued to existing SCADA network via RTU.

b. When discrete signal is received at RTU from MS-1 or MS-2 of pump(s) on following a time delay, a pump(s) run shall be issued to existing SCADA network via RTU.

c. When discrete signal is received at RTU from CR4 of high high wet well level following a time delay, a high high wet well level shall be issued to existing SCADA network via RTU.

d. When a discrete signal is received at RTU from CR51 (overtemp), SFR1 (seal failure), or CR8 (ground fault) following a time delay, the individual alarm shall be issued to existing SCADA network via RTU.

Upon receipt of overtemp or ground fault signal, Pump shall be removed from ready status and not allowed to run. Pump shall return to ready status and allowed to run after the overtemp and ground fault discrete signal has been discontinued.

e. When a discrete signal is received at RTU from CR52 (overtemp), SFR2 (seal failure), or CR9 (ground fault) following a time delay, the individual alarm shall be issued to existing SCADA network via RTU.

Upon receipt of overtemp or ground fault signal, Pump shall be removed from ready status and not allowed to run. Pump shall return to ready status and allowed to run after the overtemp and ground fault discrete signal has been discontinued.

f. When discrete signal is received at RTU from intruder switch(s) ZS following a time delay, an intruder alarm signal shall be issued to existing SCADA via RTU. Intruder alarm shall be reset by one of the following actions:

i. Signal from intruder switch(s) is discontinued.

ii. Acknowledgment of alarm via the existing SCADA network.

g. RTU shall receive and monitor 4-20 mA DC signal from the following devices:

| **Tag** | **Variable** |
|---|---|
| LT | Water Level in Wet well |
| IIT-1 | Pump No. 1 Current Draw |
| IIT-2 | Pump No. 2 Current Draw |

Continuous analog signal corresponding to the variables shall be issued to existing SCADA network via RTU.

h. RTU shall receive and monitor 4-20 mA DC signal from the following future devices:

| **Tag** | **Variable** |
|---|---|
| CGD | Percent LEL in Wet well |

Continuous analog signal corresponding to each of these variables shall be issued to existing SCADA network via RTU.

i. When discrete signal is received from CR01 on loss of RTU panel power following a time delay, a loss of RTU power alarm shall be issued to existing SCADA network via RTU.

j. RTU shall monitor position of each pump H-0-A switch. When switch is in auto, a switch in auto position shall be issue to existing SCADA network via RTU.

k. RTU shall internally monitor its own diagnostic protocols. When any of these protocols are out of specification following a time delay, a RTU trouble signal shall be issued to existing SCADA network via RTU. Signal shall be discontinued when condition is corrected.

D. Internal RTU Program Adjustable Software Values.

| Description | Range, Initial Setting |
|---|---|
| 1. Pump start/stop time delay | 0-60 sec, 10 sec |
| 2. RTU Fault Output time delay | 0-60 sec, 30 sec |
| 3. RTU Fault Reset Time Delay | 0-60 sec, 30 sec |
| 4. Other display/parameter elements shall Be provided as required. | |

E. HMI

1. Provide all programming and software modifications for the existing SCADA HMI program to implement the requirements for a complete and functional system as specified herein and shown on drawings.

2. General programming shall include but not be limited to the following:

a. Graphic display of all new and existing discrete and analog data.
b. Reporting of all new and existing discrete and analog data.
c. Alarm reception and acknowledgment of the new and existing alarms.
d. Control output of data from central computer to RTU=s per P&I diagram and these specifications.

3. Specific Functions shall be as follows:

a. General Alarm Logging and Reset.

i. Log all alarm received.
ii. Display all received alarms, graphically.
iii. Provide alarm acknowledgment.

b. Provide display and alarm function of all alarms and faults indicated on drawing(s) and specified herein.

c. Provide and display status indication for pump(s). This shall include running non-resettable runtime total.

d. Provide and display variable (analog) status functions.

i. Functions shall be shown graphically and numerically.
ii. Daily totalizer shall be provided for flow variable. Totalizer shall reset to zero at midnight and transfer total daily value to previous day reading.
iii. Provide for all analogs indicated on P&ID drawings.

e. Trending and Record keeping

i. All data (analog) and events (alarm and status) shall be stored for trending and records.

f. Sewage Pump Auto/Manual/Off Control

An auto/manual/off selector shall be provided for each pump.

Manual
i. When manual mode is selected, additional on-screen start/stop functions will appear.
ii. Operator can use the pump start/stop command to control selected pump(s) via SCADA.

Auto Mode
i. When auto mode is selected, additional on-screen start/stop functions will appear.
ii. Operator shall input RTU operational level setpoints for ALead Pump Start@; ALag Pump Start@; AHigh Level Alarm@; AAll Pumps Off@.

Off Mode
i. When off mode is selected, no additional screens will appear and no commands will be issued.

g. Wet well Level Status Monitoring
i. Operator can enter a setpoint for level. The SCADA system will alarm output AWARNING WET WELL LEVEL APPROACHING OVERFLOW CONDITION@.
ii. When level is exceeded, alarm will be issued.
iii. When level drops below setpoint, alarm output will be discontinued after time delay.

h. The following adjustable parameters shall be provided at SCADA HMI:

| Description | Range, Initial Setting |
|---|---|
| i. Lead Pump Start | Wet well Depth (Ft), TBD |
| ii. Lag Pump Start | Wet well Depth (Ft), TBD |
| iii. All Pumps Off | Wet well Depth (Ft), TBD |
| iv. High Level Alarm | Wet well Depth (Ft), TBD |
| v. Warning Wet well Level Approaching Overflow Condition | Wet well Depth (Ft), TBD |

**4.03 UNIT PROCESS X DISINFECTION (NaOCl STORAGE)**

(Main WTP, X = 4)
(R. L. Pratt WTP, X = 0)

A. Field Functions:

1. Existing functions at Tank Fill Panel, FP-X-1, shall remain as shown on drawings.

2. Provide discrete signal from existing float switch LSH-X-2-1 to PLC-X-1 upon high level in sodium hypochlorite storage area containment. Condition shall be self-resetting.

3. Provide continuous 4-20 mA DC signal from existing sodium hypochlorite storage tank level indicating transmitter LE/LIT-X-2-(2) to PLC corresponding to liquid level in the tanks.

B. Field Components:

| **Tag Number** | **Component ID Code** | **Component Name Options and Notes** |
|---|---|---|
| LE/LIT-X-2-(2) | Existing | Ultrasonic Level Transmitter Range: 0-12 Feet |
| PLC-X-2 | Section 13710 | Programmable Logic Controller |

| **Tag Number** | **Component ID Code** | **Component Name Options and Notes** |
|---|---|---|
| Network Communication Components | Section 13710 | Ethernet Switches, Fiber Connections and other communications accessories per drawings |
| FP-X-2 | Encl 2 | NEMA 12, Freestanding |

Existing components shall remain in place and in service.

C. PLC Strategies

1. Existing Sodium Hypochlorite Fill Panel (FP-X-1).

   a. PLC shall receive and monitor 4-20 mA DC signal from existing LE/LIT-X-2-(2) corresponding to liquid level in sodium hypochlorite storage tanks. Continuous 4-20 mA DC signal corresponding to liquid level in tanks shall be issued to existing LI-X-1-2 at FP-X-1.

   b. When level in NaOCl tank(s) level rises above **FULL NAOCL DELIVERY LEVEL SETPOINT**, following a time delay, a full delivery discrete signal shall be issued to existing LH-X-1-1 and LAH-X-1-1 at FP-X-1.

2. Sodium Hypochlorite Storage

   a. PLC shall receive and monitor a 4-20 mA DC signal from existing LE/LIT-X-2-(2) corresponding to liquid level in sodium hypochlorite storage tank(s). Continuous analog

value corresponding to sodium hypochlorite tank level(s) shall be issued to WTP HMI via SCADA network.

b. When discrete signal is received at PLC from existing float LSH-X-2-1 following a time delay, a high level containment area alarm shall be issued to WTP HMI via SCADA network.

c. When level in NaOCl tank(s) level drops below the **LOW TANK LEVEL ALARM SETPOINT** following a time delay, a low NaOCl tank(s) alarm shall be issued to WTP HMI via SCADA network.

d. PLC-Chemical shall calculate volume (gallons) remaining in NaOCl storage tanks by multiplying the depth of liquid remaining in tanks by **GALLONS OF LIQUID PER FOOT SETPOINT** and issue the calculated result to WTP HMI via SCADA network.

D. Internal PLC Program Adjustable Software Values

| Description | Range, Initial Setting |
|---|---|
| 1. PLC Fault Output time delay | 0-60 sec, 30 sec |
| 2. PLC Fault Reset Time Delay | 0-60 sec, 30 sec |
| 3. Other display/parameter elements shall be provided as required. | |

E. WTP HMI

1. The following adjustable parameters shall be available at local HMI and WTP HMI:

| Description | Range, Initial Setting |
|---|---|
| **FULL NAOCL DELIVERY LEVEL SETPOINT** | 0-12 Ft, TBD |
| **LOW TANK LEVEL ALARM SETPOINT** | 0-12 Ft, 3 |
| **GALLONS OF LIQUID PER FOOT SETPOINT** | 0-1000 Gallons, TBD |

2. Provide all programming and software modifications for the WTP SCADA HMI program to implement the requirements for a complete and functional system as specified herein and shown on drawings.

3. General programming shall include but not be limited to the following:

a. Graphic display of all new and existing discrete and analog data.
b. Reporting of all new and existing discrete and analog data.
c. Alarm reception and acknowledgment of the new and existing alarms.
d. Control output of data from central computer to PLC’s per P&I diagram and these specifications.

4. Specific Functions shall be as follows:

a. General Alarm Logging and Acknowledgment.

i. Log all alarm received.
ii. Display all received alarms, graphically.
iii. Provide alarm acknowledgment.

b. Provide display and alarm function of all alarms and faults indicated on P&ID drawing(s).

c. Provide and display variable (analog) status functions.

i. Functions shall be shown graphically and numerically.
ii. Provide for all analogs indicated on P&ID drawings.

d. Trending and Record keeping

i. All data (analog) and events (alarm and status) shall be stored for trending and records.

5. Last Input Local or WTP HMI

a. The last input update shall be overwritten. Data can be input local or via WTP HMI. Last input shall overwrite the previous input. Current data input shall be displayed local and at WTP HMI.

## 4.04 UNIT PROCESS X DISINFECTION (NaOCl FEED PUMPS)

A. Field Functions:

1. Provide at FP-X-2 a selector switch, HS-X-3-(X), for each NaOCl feed pump. Functions are same for each pump as follows:

In “Off”, pump will not run.
In “Hand”, pump will run.
In “Auto”, pump will start/stop as directed by PLC.

B. Field Components:

| Tag Number | Component ID Code | Component Name Options and Notes |
|---|---|---|
| PLC-X-2 | Section 13710 | Programmable Logic Controller |
| Network Communication Components | Section 13710 | Ethernet Switches, Fiber Connections and other communications accessories per drawings |
| FP-X-2 | Encl 2 | NEMA 12, Freestanding |
| HS-X-3-(X) | M7 | Selector Switch Hand-Off-Auto |
| MS-X-3-(X) | M7 | Motor Starter |

C. PLC Strategies

1. PLC-X-2 shall receive and monitor 4-20 mA DC signals from the skid mounted components. Continuous analog values shall be issued to WTP HMI via SCADA network corresponding to the following parameters:

   a. Existing FE/FIT-X-3-(X), NaOCl flow.

2. When discrete signal is received at PLC-X-2 from MS-X-3-(X) following a time delay, pump run status indication shall be issued to WTP HMI via SCADA network.

3. When discrete signal is received at PLC-X-2 from MS-X-3-(X) following a time delay, pump fault indication shall be issued to WTP HMI via SCADA network.

4. NaOCl Feed Pumps (On/Off)

   a. Operation shall be same for each pump. There are two operational modes, auto or manual.

      Manual Mode

      When “Manual” start signal is received at PLC-X-2 from WTP HMI via SCADA network, a discrete signal shall be issued to MS-X-3-(X) via HS-X-3-(X) calling the selected pump to run.

      When “Manual” start signal is discontinued to PLC-X-2 from WTP HMI via SCADA network, the output shall be discontinued and selected pump shall stop.

      Auto Mode

      When “Auto” mode is selected, a start signal will be received at PLC-X-2 from WTP HMI via SCADA network when flow is detected influent to a treatment unit issuing a discrete start signal to MS-X-3-(X) via HS-X-3-(X) calling the selected pump to run.

      Auto mode start signal will discontinue when no influent flow is detected to the treatment units discontinuing the output and stopping the pump.

5. NaOCl Feed Pumps (Pacing)

   a. NaOCl feed pacing shall be same for each feed pump. There are two operational modes for each pump, auto or manual. Operation is same for each as follows:

      Manual Mode

      Manual (pacing) signal shall be received at PLC-X-2 from WTP HMI via SCADA network. Manual setpoint (pacing signal) shall be issued to P-X-3-(X).

      When manual (pacing) signal is discontinued to PLC-X-2 from WTP HMI via SCADA network, the manual setpoint shall go to zero (0)%.

Auto Mode

When auto signal is received at PLC-X-2 from WTP HMI via SCADA network, pacing signal shall be output to P-X-3-(X) based on calculation following a time delay.

Pacing signal output shall be calculated as follows:

- The following input selections shall be received at PLC-NaOCl from WTP HMI via SCADA network.

  i. **TREATMENT UNIT FLOW REFERENCE SELECTION**

  ii. **NaOCl DOSAGE SETPOINT**

  iii. **MAXIMUM NaOCl RATE AVAILABLE**

  iv. **NaOCl DELIVERY CONCENTRATION**

  v. **TIME DELAY IN PERCENT SCALE REFERENCE RECALCULATION**

- Pacing signal output shall be calculated as follows:

  Percent Scale Reference (AO) = **NaOCl DOSAGE SETPOINT** X **TREATMENT UNIT FLOW REFERENCE SELECTION** (MGD) X 8.34 LB/Gal ÷9.74 LB/Gal ÷ **NaOCl DELIVERY CONCENTRATION** ÷ 24 Hours ÷ **MAXIMUM NaOCl AVAILABLE** X 100

  Example:

  **TREATMENT UNIT FLOW REFERENCE SELECTION** = 2.0 MGD
  **NaOCl D0SAGE SETPOINT** = 10.0 mg/l
  **MAXIMUM NaOCl RATE AVAILABLE** = 20 GPH
  **NaOCl DELIVERY CONCENTRATION** = 12% = 0.12

  Percent Scale Reference = 10 X 2 X 8.34 ÷ 9.74 ÷ 0.12 ÷ 24 ÷ 20 X 100 = 31.24%

  Recalculate following **TIME DELAY IN PERCENT SCALE REFERENCE CALCULATION**

  When ‘‘Auto’’ signal is discontinued to PLC-X-2 from WTP HMI via SCADA network, the pacing signal shall go to 0% and the call signal shall be discontinued.

D. Internal PLC Program Adjustable Software Values

| Description | Range, Initial Setting |
|---|---|
| 1. PLC Fault Output time delay | 0-60 sec, 30 sec |
| 2. PLC Fault Reset Time Delay | 0-60 sec, 30 sec |
| 3. Other display/parameter elements shall Be provided as required. | |

E. Local Operator Interface HMI

1. The following adjustable parameters shall be available at local HMI and WTP HMI:

| Description | Range, Initial Setting |
|---|---|
| **TREATMENT UNIT FLOW REFERENCE SELECTION** | 1, 2, 3, :1 |
| **NaOCl DOSAGE SETPOINT** | 0-20 mg/l, 10 |
| **MAXIMUM NaOCl RATE AVAILABLE** | 0-20 gph, 15 |
| **NaOCl DELIVERY CONCENTRATION** | 0-15%, 12 |
| **TIME DELAY IN PERCENT SCALE REFERENCE RE-CALCULATION** | 0-30 Min, 3 |

F. WTP HMI

1. Provide all programming and software modifications for the WTP SCADA HMI program to implement the requirements for a complete and functional system as specified herein and shown on drawings.

2. General programming shall include but not be limited to the following:

   a. Graphic display of all new and existing discrete and analog data.
   b. Reporting of all new and existing discrete and analog data.
   c. Alarm reception and acknowledgment of the new and existing alarms.
   d. Control output of data from central computer to PLC’s per P&I diagram and these specifications.

3. Specific Functions shall be as follows:

   a. General Alarm Logging and Acknowledgment.

      i. Log all alarm received.
      ii. Display all received alarms, graphically.
      iii. Provide alarm acknowledgment.

   b. Provide display and alarm function of all alarms and faults indicated on P&ID drawing(s).

   c. Provide and display status indication for pump(s). This shall include running non-resettable runtime total.

   d. Provide and display variable (analog) status functions.

      i. Functions shall be shown graphically and numerically.
      ii. Daily totalizer shall be provided for flow variable at each valve. Totalizer value shall be converted to pounds of chemical feed per day and a daily totalizer shall be provided for pounds per day from each pump. A totalizer summing the total pounds per day fed shall be provided and shall reset to zero at midnight and transfer total daily value to previous day reading.
      iii. Provide for all analogs indicated on P&ID drawings.

   e. Trending and Record keeping

      i. All data (analog) and events (alarm and status) shall

be stored for trending and records.

f. Auto/Manual control for NaOCl feed pumps (typ).

Manual Mode

i. When ‘‘Manual’’ mode is selected, the corresponding pump shall be called. Additional on screen pump start/stop command will appear.

Auto Mode

i. When ‘‘Auto’’ mode is selected, the corresponding pump shall be called and energized when influent plant flow is detected.

g. Pacing signal commands shall be as specified herein and shown on P&ID drawings.

4. Last Input Local or WTP HMI

a. The last input update shall be overwritten. Data can be input local or via WTP HMI. Last input shall overwrite the previous input. Current data input shall be displayed local and at WTP HMI.

**4.05 REMOTE I/O PANEL(S)**

A. Field Functions

1. I/O Panel(s) shall accept points per drawings.

2. Modify existing systems to incorporate/interface with new PLC(s).

B. Field Components:

| Tag Number | Component ID Code | Component Name and Options |
|---|---|---|
| PLC(s) | Section 13710 | Programmable Logic Controller |
| Network Communication Components | Section 13710 | Ethernet Switches, Fiber Connections, and other Communications Accessories per drawings |
| Remote IO-Panel(s) (Interior Location) | Encl 2 | NEMA 12, Freestanding |
| Remote IO-Panel(s) (Exterior Location) | Encl 1 | NEMA 3R, SST |

C. PLC Strategies

1. Specified herein Part 5 and as shown on the drawings.

**PART 5 HMI FUNCTION CODES**

**5.01 HMI-1 FLOW DISPLAY**

A. Field Functions:

1. Function(s) shall remain except as modified herein.

2. Modify existing systems to incorporate/interface with new PLC.

B. Field Components:

| Tag Number | Component Identification Code | Component Name and Options |
|---|---|---|

Field instruments are existing.

C. PLC Strategies:

1. PLC shall receive and monitor 4-20 mA DC signal from the following devices:

| Originating Field Instrument | Process Variable |
|---|---|
| Scheduled on Drawings | Flow |

Continuous analog signal corresponding to the variables shall be issued to SCADA network via PLC.

D. Internal PLC Program Adjustable Software Values.

| Description | Range, Initial Setting |
|---|---|
| 1. PLC Fault Reset Time Delay | 0-60 sec, 30 sec |
| 2. Other display/parameter elements shall Be provided as required. | |

E. HMI

1. Provide all programming and software modifications for the SCADA HMI program to implement the requirements for a complete and functional system as specified herein and shown on drawings.

2. General programming shall include but not be limited to the following:

   a. Graphic display of analog flow data.
   b. Reporting of all analog flow data.
   c. Alarm reception and acknowledgment of the new and existing alarms.
   d. Control output of data from central computer to PLC=s per P&I diagram and these specifications.
   e. Units of measure and range per HMI function criteria tables. See drawings.

3. Specific Functions shall be as follows:

   a. Provide and display variable (analog) status functions.

      i. Functions shall be shown graphically and numerically.
      ii. Daily totalizer shall be provided for flow variable. Totalizer shall reset to zero at midnight and transfer total daily value to previous day reading.
      iii. Provide for all analogs indicated on P&ID drawings.

b. Trending and Record keeping

i. All data (analog) and events (alarm and status) shall be stored for trending and records.

**5.02 HMI-2 FLOW SUMMATION**

A. Field Functions:

1. Existing functions shall remain as shown on drawings.

2. Modify existing systems to incorporate/interface with new PLC.

B. Field components:

1. Existing components shall remain in place and in service.

| Tag Number | Component Identification Code | Component Name and Options |
|---|---|---|

Field instruments are existing.

C. PLC Strategies

1. None.

D. Internal PLC Program Adjustable Software Values.

| Description | Range, Initial Setting |
|---|---|
| 1. PLC Fault Reset Time Delay | 0-60 sec, 30 sec |
| 2. Other display/parameter elements shall Be provided as required. | |

E. HMI

1. Provide all programming and software modifications for the SCADA HMI program to implement the requirements for a complete and functional system as specified herein and shown on drawings.

2. General programming shall include but not be limited to the following:

a. Graphic display of analog data.
b. Reporting of all data.
c. Alarm reception and acknowledgment of the alarms.
d. Control output of data from central computer to PLC=s per P&I diagram and these specifications.
e. Units of measure and range per HMI function criteria table. See drawings.

3. Specific Functions shall be as follows:

a. Provide and display variable (analog) status functions.

i. Functions shall be shown graphically and numerically.
ii. Daily totalizer shall be provided for flow variable. Totalizer shall reset to zero at midnight and transfer total daily value to previous day reading.
iii. Provide for summation of all analogs indicated on P&ID drawings.

ii. Provide for all analogs indicated on P&ID drawings.

b. Trending and Record keeping

i. All data (analog) and events (alarm and status) shall be stored for trending and records.

**5.04 HMI-4 DISCRETE CONTACT ALARM**

A. Field Functions:

1. Function(s) shall remain except as modified herein.

2. Modify existing systems to incorporate/interface with new PLC.

B. Field Components:

| Tag Number | Component Identification Code | Component Name and Options |
|---|---|---|

Field instruments are existing.

C. PLC Strategies:

1. PLC shall receive discrete signals from the following devices:

| Originating Field Panel, Field Instrument, or Similar Device | Alarm or Status Input |
|---|---|
| Scheduled on Drawings | Scheduled on Drawings |

Discrete signals shall be issued to SCADA network via PLC.

D. Internal PLC Program Adjustable Software Values.

| Description | Range, Initial Setting |
|---|---|
| 1. PLC Fault Reset Time Delay | 0-60 sec, 30 sec |
| 2. Other display/parameter elements shall Be provided as required. | |

E. HMI

1. Provide all programming and software modifications for the SCADA HMI program to implement the requirements for a complete and functional system as specified herein and shown on drawings.

2. General programming shall include but not be limited to the following:

a. Graphic display of discrete data.
b. Reporting of discrete data.
c. Alarm reception and acknowledgment of alarms.
d. Control output of data from central computer to PLC=s per P&I diagram and these specifications.

3. Specific Functions shall be as follows:

a. General Alarm Logging and Acknowledgment.

i. Log all alarms received.
ii. Display all received alarms, graphically.
iii. Provide alarm acknowledgment.

b. Provide display and alarm function of all alarms and faults indicated on P&ID drawing(s).

c. Trending and Record keeping

i. All data (analog) and events (alarm and status) shall be stored for trending and records.

**5.05 HMI-5 PROCESS VARIABLE DISPLAY**

A. Field Functions:

1. Function(s) shall remain except as modified herein.

2. Modify existing systems to incorporate/interface with new PLC.

B. Field Components:

| Tag Number | Component Identification Code | Component Name and Options |
|---|---|---|

Field instruments are existing.

C. PLC Strategies:

1. PLC shall receive and monitor 4-20 mA DC signal from the following devices:

| Originating Field Instrument | Process Variable |
|---|---|
| Scheduled on Drawings | Scheduled on Drawings |

Continuous analog signal corresponding to the above schedule variables shall be issued to SCADA network via PLC.

D. Internal PLC Program Adjustable Software Values.

| Description | Range, Initial Setting |
|---|---|
| 1. PLC Fault Reset Time Delay | 0-60 sec, 30 sec |
| 2. Other display/parameter elements shall Be provided as required. | |

E. HMI

1. Provide all programming and software modifications for the SCADA HMI program to implement the requirements for a complete and functional system as specified herein and shown on drawings.

2. General programming shall include but not be limited to the following:

a. Graphic display of analog process variable data.
b. Reporting of analog process variable data.
c. Alarm reception and acknowledgment of alarms.

d. Control output of data from central computer to PLC=s per P&I diagram and these specifications.

3. Specific Functions shall be as follows:

a. Provide and display variable (analog) status functions.

i. Functions shall be shown graphically and numerically.
ii. Provide for all analogs indicated on P&ID drawings.

b. HMI shall provide and display the following relative to the process variable:

i. High or low process variable condition alarm based on HMI setpoints.
ii. Conditions to be shown graphically and numerically.
iii. Provide all indications shown on P&ID drawings.
iv. Setpoint range shall match process variable range.

c. Trending and Record keeping

i. All data (analog) and events (alarm and status) shall be stored for trending and records.

## 5.06 HMI-6 VARIABLE SPEED PUMPING SYSTEM

A. Field Functions:

1. Function(s) shall remain except as modified herein.

2. Modify existing systems to incorporate/interface with new HMI.

B. Field Components:

| Tag Number | Component Identification Code | Component Name and Options |
|---|---|---|

Field instruments are existing.

C. PLC Strategies:

1. PLC shall receive and monitor 4-20 mA DC signal from the following devices:

| Originating Field Instrument | Process Variable |
|---|---|
| Scheduled on Drawings | Scheduled on Drawings |

Continuous analog signal corresponding to the above schedule variables shall be issued to SCADA network via PLC.

2. Existing PLC strategies and programming shall be re-established.

D. Internal PLC Program Adjustable Software Values.

| Description | Range, Initial Setting |
|---|---|
| 1. PLC Fault Reset Time Delay | 0-60 sec, 30 sec |
| 2. Other display/parameter elements shall Be provided as required. | |

E. HMI

1. Provide all programming and software modifications for the SCADA HMI program to implement the requirements for a complete and functional system as specified herein and shown on drawings.

2. General programming shall include but not be limited to the following:

   a. Graphic display of all new and existing discrete and analog data.
   b. Reporting of all new and existing discrete and analog data.
   c. Alarm reception and acknowledgment of the new and existing alarms.
   d. Control output of data from central computer to PLC's per P&I diagram and these specifications.

3. Specific Functions shall be as follows:

   a. General Alarm Logging and Acknowledgment.

      i. Log all alarm received.
      ii. Display all received alarms, graphically.
      iii. Provide alarm acknowledgment.

   b. Provide display and alarm function of all alarms and faults indicated on P&ID drawing(s).

   c. Provide and display status indication for pump(s). This shall include running non-resettable runtime total.

   d. Provide and display variable (analog) status functions.

      i. Functions shall be shown graphically and numerically.
      ii. Daily totalizer shall be provided for flow variable. Totalizer shall reset to zero at midnight and transfer total daily value to previous day reading.
      iii. Provide for all analogs indicated on P&ID drawings.

   e. Trending and Record keeping

      i. All data (analog) and events (alarm and status) shall be stored for trending and records.

   f. Pump Position Selection and Alternation

      i. When alternation selection mode is initiated, additional on-screen commands will appear:

         - Pump 1 = Lead, Fol1, Fol2, Fol3, Fol4
         - Pump 2 = Lead, Fol1, Fol2, Fol3, Fol4
         - Pump 3 = Lead, Fol1, Fol2, Fol3, Fol4
         - Pump 4 = Lead, Fol1, Fol2, Fol3, Fol4
         - Pump X = Lead, Fol1, Fol2, Fol3, Fol4, Fo1X

      ii. Pumps will remain in selected order and alternate one position as directed by PLC on alternation time setting.

   g. Hand/Off/Auto control for pumps (typ)

      <u>Off Mode</u>

      i. When ''Off'' mode is selected, no remote operation is requested.

Hand Mode

i. When ''Hand'' mode is selected, the corresponding pump/VFD shall be called and energized. Additional on-screen pump speed setpoint (0-100%) command will appear.

Auto Mode

i. When ''Auto'' mode is selected, the corresponding pump/VFD shall be called and energized as directed by PLC-HSP. The following additional on-screen commands will appear:

- Operator interface command related to pumping as specified herein.

4. Last Input Local or WTP HMI

a. The last input update shall be overwritten. Data can be input local or via WTP HMI. Last input shall overwrite the previous input. Current data input shall be displayed local and at WTP HMI.

**5.07 HMI-7 CONSTANT SPEED PUMP OR BLOWER SYSTEM**

A. Field Functions:

1. Function(s) shall remain except as modified herein.

2. Modify existing systems to incorporate/interface with new HMI.

B. Field Components:

| Tag Number | Component Identification Code | Component Name and Options |
|---|---|---|

Field instruments are existing.

C. PLC Strategies:

1. Existing PLC strategies and programming shall remain and/or be re-established with new system components.

D. Internal PLC Program Adjustable Software Values.

| Description | Range, Initial Setting |
|---|---|
| 1. PLC Fault Reset Time Delay | 0-60 sec, 30 sec |
| 2. Other display/parameter elements shall Be provided as required. | |

E. HMI

1. Provide all programming and software modifications for the SCADA HMI program to implement the requirements for a complete and functional system as specified herein and shown on drawings.

2. General programming shall include but not be limited to the following:

a. Graphic display of all new and existing discrete and analog data.

b. Reporting of all new and existing discrete and analog data.
c. Alarm reception and acknowledgment of the new and existing alarms.
d. Control output of data from central computer to PLC's per P&I diagram and these specifications.

3. Specific Functions shall be as follows:

a. General Alarm Logging and Acknowledgment.

i. Log all alarm received.
ii. Display all received alarms, graphically.
iii. Provide alarm acknowledgment.

b. Provide display and alarm function of all alarms and faults indicated on P&ID drawing(s).

c. Provide and display status indication for pump(s). This shall include running non-resettable runtime total.

d. Provide and display variable (analog) status functions.

i. Functions shall be shown graphically and numerically.
ii. Daily totalizer shall be provided for flow variable. Totalizer shall reset to zero at midnight and transfer total daily value to previous day reading.
iii. Provide for all analogs indicated on P&ID drawings.

e. Trending and Record keeping

i. All data (analog) and events (alarm and status) shall be stored for trending and records.

f. Pump Position Selection and Alternation

i. When alternation selection mode is initiated, additional on-screen commands will appear:

- Pump 1 = Lead, Fol1, Fol2, Fol3, Fol4
- Pump 2 = Lead, Fol1, Fol2, Fol3, Fol4
- Pump 3 = Lead, Fol1, Fol2, Fol3, Fol4
- Pump 4 = Lead, Fol1, Fol2, Fol3, Fol4
- Pump X = Lead, Fol1, Fol2, Fol3, Fol4, Fo1X

ii. Pumps will remain in selected order and alternate one position as directed by PLC on alternation time setting.

g. Hand/Off/Auto control for pumps (typ)

<u>Off Mode</u>

i. When ''Off'' mode is selected, no remote operation is requested.

<u>Hand Mode</u>

i. When ''Hand'' mode is selected, the corresponding pump shall be called and energized.

<u>Auto Mode</u>

i. When ''Auto'' mode is selected, the corresponding pump shall be called and energized as directed by PLC.

4. Last Input Local or WTP HMI

   a. The last input update shall be overwritten. Data can be input local or via WTP HMI. Last input shall overwrite the previous input. Current data input shall be displayed local and at WTP HMI.

**5.08 HMI-8 PRESSURE DISPLAY**

A. Field Functions:

1. Function(s) shall remain except as modified herein.

2. Modify existing systems to incorporate/interface with new PLC.

B. Field Components:

| Tag Number | Component Identification Code | Component Name and Options |
|---|---|---|

Field instruments are existing.

C. PLC Strategies:

1. PLC shall receive and monitor 4-20 mA DC signal from the following devices:

| Originating Field Instrument | Process Variable |
|---|---|
| Scheduled on Drawings | Pressure |

Continuous analog signal corresponding to the above schedule variables shall be issued to SCADA network via PLC.

2. Existing PLC strategies and programming shall remain and/or be re-established with new system components.

D. Internal PLC Program Adjustable Software Values.

| Description | Range, Initial Setting |
|---|---|
| 1. PLC Fault Reset Time Delay | 0-60 sec, 30 sec |
| 2. Other display/parameter elements shall Be provided as required. | |

E. HMI

1. Provide all programming and software modifications for the SCADA HMI program to implement the requirements for a complete and functional system as specified herein and shown on drawings.

2. General programming shall include but not be limited to the following:

   a. Graphic display of analog pressure data.
   b. Reporting of analog pressure data.
   c. Alarm reception and acknowledgment of alarms.
   d. Control output of data from central computer to PLC=s per P&I diagram and these specifications.

3. Specific Functions shall be as follows:

a. Provide and display variable (analog) status functions.

i. Functions shall be shown graphically and numerically.
ii. Provide for all analogs indicated on P&ID drawings.

b. HMI shall provide and display the following relative to the process variable:

i. High or low process variable condition alarm based on HMI setpoints.
ii. Conditions to be shown graphically and numerically.
iii. Provide all indications shown on P&ID drawings.
iv. Setpoint range shall match process variable range.

c. Trending and Record keeping

i. All data (analog) and events (alarm and status) shall be stored for trending and records.

## 5.09 HMI-9 OPEN/CLOSE VALVE CONTROL

A. Field Functions:

1. Function(s) shall remain except as modified herein.

2. Modify existing systems to incorporate/interface with new HMI.

B. Field Components:

| Tag Number | Component Identification Code | Component Name and Options |
|---|---|---|

Field instruments are existing.

C. PLC Strategies:

1. Existing PLC strategies and programming shall remain and/or be re-established with new system components.

D. Internal PLC Program Adjustable Software Values.

| Description | Range, Initial Setting |
|---|---|
| 1. PLC Fault Reset Time Delay | 0-60 sec, 30 sec |
| 2. Other display/parameter elements shall Be provided as required. | |

E. HMI

1. Provide all programming and software modifications for the SCADA HMI program to implement the requirements for a complete and functional system as specified herein and shown on drawings.

2. General programming shall include but not be limited to the following:

a. Graphic display of analog discrete and data.
b. Reporting of analog discrete and data.
c. Alarm reception and acknowledgment of alarms.
d. Control output of data from central computer to PLC=s per P&I diagram and these specifications.

3. Specific Functions shall be as follows:

a. General alarm logging and acknowledgment.

i. Log all alarms received.
ii. Display all received alarms graphically.
iii. Provide alarm acknowledgment.

b. Provide display and alarm function of all alarms and faults indicated on P&ID drawings.

c. Provide and display open/close status indication for valve(s).

d. Trending and Record keeping

i. All data (analog) and events (alarm and status) shall be stored for trending and records.

e. Hand/Off/Auto Control for Valves

Off Mode

i. When ''Off'' mode is selected, no remote operation is requested.

Hand Mode

i. When ''Hand'' mode is selected, the corresponding valve shall be operated via HMI commands. Additional on screen ''Open'' and ''Close'' commands shall appear.

Auto Mode

i. When ''Auto'' mode is selected, the corresponding valve shall be operated under PLC control.

**5.10 HMI-10 EQUIPMENT RUN INDICATION**

A. Field Functions:

1. Function(s) shall remain except as modified herein.

2. Modify existing systems to incorporate/interface with new HMI.

B. Field Components:

| **Tag Number** | **Component Identification Code** | **Component Name and Options** |
|---|---|---|

Field instruments are existing.

C. PLC Strategies:

1. Existing PLC strategies and programming shall remain and/or be re-established with new system components.

D. Internal PLC Program Adjustable Software Values.

| Description | Range, Initial Setting |
|---|---|
| 1. PLC Fault Reset Time Delay | 0-60 sec, 30 sec |

2. Other display/parameter elements shall Be provided as required.

E. HMI

1. Provide all programming and software modifications for the SCADA HMI program to implement the requirements for a complete and functional system as specified herein and shown on drawings.

2. General programming shall include but not be limited to the following:

a. Graphic display of all new and existing discrete and analog data.
b. Reporting of all new and existing discrete and analog data.
c. Alarm reception and acknowledgment of the new and existing alarms.
d. Control output of data from central computer to PLC's per P&I diagram and these specifications.

3. Specific Functions shall be as follows:

a. General Alarm Logging and Acknowledgment.

i. Log all alarm received.
ii. Display all received alarms, graphically.
iii. Provide alarm acknowledgment.

b. Provide display and alarm function of all alarms and faults indicated on P&ID drawing(s).

c. Provide and display status indication for equipment. This shall include running non-resettable runtime total.

d. Trending and Record keeping

i. All data (analog) and events (alarm and status) shall be stored for trending and records.

## 5.11 HMI-11 CHEMICAL STORAGE TANK (NO MIXING)

A. Field Functions:

1. Function(s) shall remain except as modified herein.

2. Modify existing systems to incorporate/interface with new HMI.

B. Field Components:

| **Tag Number** | **Component Identification Code** | **Component Name and Options** |
|---|---|---|

Field instruments are existing.

C. PLC Strategies:

1. PLC shall receive and monitor 4-20 mA DC signal from the following devices:

| **Originating Field Instrument** | **Process Variable** |
|---|---|
| Scheduled on Drawings | Tank Level |

Continuous analog signal corresponding to the above schedule variables shall be issued to SCADA network via PLC.

2. Existing PLC strategies and programming shall remain and/or be re-established with new system components.

D. Internal PLC Program Adjustable Software Values.

| Description | Range, Initial Setting |
|---|---|
| 1. PLC Fault Reset Time Delay | 0-60 sec, 30 sec |
| 2. Other display/parameter elements shall Be provided as required. | |

E. HMI

1. Provide all programming and software modifications for the SCADA HMI program to implement the requirements for a complete and functional system as specified herein and shown on drawings.

2. General programming shall include but not be limited to the following:

   a. Graphic display of analog level data.
   b. Reporting of analog level data.
   c. Alarm reception and acknowledgment of alarms.
   d. Control output of data from central computer to PLC=s per P&I diagram and these specifications.

3. Specific Functions shall be as follows:

   a. Provide and display variable (analog) status functions.

      i. Functions shall be shown graphically and numerically.
      ii. Provide for all analogs indicated on P&ID drawings.

   b. HMI shall provide and display the following relative to the level variable:

      i. Convert measured tank liquid depth to volume in gallons. Calculation shall be based on tank geometry and equivalent gallons per foot.

      ii. Display volume graphically and numerically.

      iii. Indicate when tank level reaches re-order level. Setpoint range shall match tank depth.

      iv. Calculate and display volume of chemical used current day and previous day. Displays shall self-reset at 12:00 AM (midnight).

      v. Calculate and display pounds of chemical used current day and previous day. Displays shall self-reset at 12:00 AM (midnight). ENGINEER shall provide volume to weight conversion factors by chemical.

   c. Trending and Record keeping

      i. All data (analog) and events (alarm and status) shall be stored for trending and records.

## 5.12 HMI-12 CHEMICAL FEED PUMP (POSITIVE DISPLACEMENT DIAPHRAGM)

A. Field Functions:

1. Function(s) shall remain except as modified herein.

2. Modify existing systems to incorporate/interface with new HMI.

B. Field Components:

| Tag Number | Component Identification Code | Component Name and Options |
|---|---|---|

Field instruments are existing.

C. PLC Strategies:

1. PLC strategies per Article 4.04, C, herein.

D. Internal PLC Program Adjustable Software Values.

| Description | Range, Initial Setting |
|---|---|
| 1. PLC Fault Reset Time Delay | 0-60 sec, 30 sec |
| 2. Other display/parameter elements shall Be provided as required. | |

E. HMI

1. HMI programming per Article 4.04, F, herein.

## 5.13 HMI-13 CHEMICAL FEED FLOW MEASUREMENT

A. Field Functions:

1. Function(s) shall remain except as modified herein.

2. Modify existing systems to incorporate/interface with new HMI.

B. Field Components:

| Tag Number | Component Identification Code | Component Name and Options |
|---|---|---|

Field instruments are existing.

C. PLC Strategies:

1. PLC shall receive and monitor 4-20 mA DC signal from the following devices:

| Originating Field Instrument | Process Variable |
|---|---|
| Scheduled on Drawings | Chemical Flow |

Continuous analog signal corresponding to the above schedule variables shall be issued to SCADA network via PLC.

2. Existing PLC strategies and programming shall remain and/or be re-established with new system components.

D. Internal PLC Program Adjustable Software Values.

| Description | Range, Initial Setting |
|---|---|
| 1. PLC Fault Reset Time Delay | 0-60 sec, 30 sec |
| 2. Other display/parameter elements shall Be provided as required. | |

E. HMI

1. Provide all programming and software modifications for the SCADA HMI program to implement the requirements for a complete and functional system as specified herein and shown on drawings.

2. General programming shall include but not be limited to the following:

   a. Graphic display of analog flow data.
   b. Reporting of analog flow data.
   c. Alarm reception and acknowledgment of alarms.
   d. Control output of data from central computer to PLC=s per P&I diagram and these specifications.

3. Specific Functions shall be as follows:

   a. Provide and display variable (analog) status functions.

      i. Functions shall be shown graphically and numerically.
      ii. Provide for all analogs indicated on P&ID drawings.

   b. HMI shall provide and display the following relative to NaOCl flow measurement:

      i. Daily totalizer in gallons for each flow meter for current day and previous day. Data resets and transfers at 12:00 AM (midnight).

      ii. Daily totalizer summation of all flow meters for current day and previous day. Data resets and transfers at 12:00 AM (midnight).

      iii. Convert all totalizer values to pounds of chemical fed current and previous day. Data resets and transfers at 12:00 AM (midnight).

      iv. Daily totalizers shall reset to zero at midnight and transfer totals to previous day.

   c. Trending and Record keeping

      i. All data (analog) and events (alarm and status) shall be stored for trending and records.

## 5.14 HMI-14 DISCRETE OPEN/CLOSE VALVE STATUS (NO CONTROL)

A. Field Functions:

1. Function(s) shall remain except as modified herein.

2. Modify existing systems to incorporate/interface with new HMI.

B. Field Components:

| Tag Number | Component Identification Code | Component Name and Options |
|---|---|---|

Field instruments are existing.

C. PLC Strategies:

1. Existing PLC strategies and programming shall remain and/or be re-established with new system components.

D. Internal PLC Program Adjustable Software Values.

| Description | Range, Initial Setting |
|---|---|
| 1. PLC Fault Reset Time Delay | 0-60 sec, 30 sec |
| 2. Other display/parameter elements shall be provided as required. | |

E. HMI

1. Provide all programming and software modifications for the SCADA HMI program to implement the requirements for a complete and functional system as specified herein and shown on drawings.

2. General programming shall include but not be limited to the following:

   a. Graphic display of analog discrete and data.
   b. Reporting of analog discrete and data.
   c. Alarm reception and acknowledgment of alarms.
   d. Control output of data from central computer to PLC=s per P&I diagram and these specifications.

3. Specific Functions shall be as follows:

   a. General alarm logging and acknowledgment.

      i. Log all alarms received.
      ii. Display all received alarms graphically.
      iii. Provide alarm acknowledgment.

   b. Provide display and alarm function of all alarms and faults indicated on P&ID drawings.

   c. Provide and display open/close status indication for valve(s).

   d. Trending and Record keeping

      i. All data (analog) and events (alarm and status) shall be stored for trending and records.

## 5.15 HMI-15 DISCRETE EVENT INDICATION

A. Field Functions:

1. Function(s) shall remain except as modified herein.

2. Modify existing systems to incorporate/interface with new HMI.

B. Field Components:

| Tag Number | Component Identification Code | Component Name and Options |
|---|---|---|

Field instruments are existing.

C. PLC Strategies:

1. Existing PLC strategies and programming shall remain and/or be re-established with new system components.

D. Internal PLC Program Adjustable Software Values.

| Description | Range, Initial Setting |
|---|---|
| 1. PLC Fault Reset Time Delay | 0-60 sec, 30 sec |
| 2. Other display/parameter elements shall Be provided as required. | |

E. HMI

1. Provide all programming and software modifications for the SCADA HMI program to implement the requirements for a complete and functional system as specified herein and shown on drawings.

2. General programming shall include but not be limited to the following:

   a. Graphic display of discrete event data.
   b. Reporting of discrete event data.
   c. Alarm reception and acknowledgment of alarms.
   d. Control output of data from central computer to PLC=s per P&I diagram and these specifications.

3. Specific Functions shall be as follows:

   a. Provide and display discrete status functions.

      i. Functions shall be shown graphically and numerically.
      ii. Provide for all discrete event indication(s) indicated on P&ID drawings.

   b. Trending and Record keeping

      i. All events (alarm and status) shall be stored for trending and records.

END OF SECTION

**SECTION 13750**

**SCADA SYSTEM SOFTWARE**

## PART 1 GENERAL

### 1.01 WORK INCLUDED

A. Provide new SCADA software. I&C INTEGRATOR shall use his own development key. Provide all software drivers as may be required. Include drivers for all indicated equipment, including future equipment.

A. Computer and SCADA system integration shall be provided by the I&C INTEGRATOR.

C. Provide all software and firmware for a complete and functional system.

D. Provide programming, labor, and all documentation for a complete system. The OWNER shall be the licensed Owner of all software and developed files.

E. The computer system shall exchange data from the RTU system, remote field panels and the remote area panels, and indicated future systems. Provide dynamic screen displays, reports, alarm handling and alarm logging and all human machine interface to the I&C system. See also the RTU specification.

F. Other software and programming functions shall be provided as may be required.

G. See the drawings. Provide SCADA programming as may be required.

H. Provide primary and secondary units as hot backup.

I. See CONDITIONS OF THE CONTRACT and Division 1, GENERAL REQUIREMENTS, which contain information and requirements that apply to the Work specified herein and are mandatory for this project.

### 1.02 RELATED WORK SPECIFIED ELSEWHERE

A. Section 13725 - Loop Functions/Programming Strategies/Protocol.

B. Section 13752 - Computers and Accessories.

### 1.03 SOFTWARE LICENSE INVENTORY AND REQUIREMENTS

A. The following table quantifies the number and type(s) of software licenses needed and existing at each facility.

| VT SCADA Software License Inventory/Requirements | | | | |
|---|---|---|---|---|
| License Type | Main WTP | | R. L. Pratt WTP | |
| | Existing | Required | Existing | Required |
| | | | | |
| Runtime | Existing Licenses to be replaced | 1 Per Server | Existing Licenses to be replaced | 1 Per Server |
| Development | Existing Licenses to be replaced | 1 | Existing Licenses to be replaced | 1 |
| Client/New Nodes | Existing Licenses to be replaced | 1 per industrial PC | Existing Licenses to be replaced | 1 per industrial PC |

A. See Drawings for additional licensing requirements. I&C INTEGRATOR to confirm all SCADA licensing requirements.

**PART 2 PRODUCTS**

**2.01 SCADA SOFTWARE (MANUFACTURER)**

A. The specifications are written around VT SCADA as manufactured by Trihedral.

B. Reuse or expand existing software and licenses where applicable.

C. System shall include:

1. Advanced Polling Management
2. Full Redundancy
3. Historical Data Viewer
4. Alarms
5. Rich Graphic Capabilities
6. Display Creation Tools
7. Auto-Generated SCADA Displays
8. Security
9. Report Generator
10. Water/Wastewater Reports
11. Open Architecture
12. High-Efficiency Tag Development
13. VTS Alarm Dialer and WAP Server

D. All applicable licenses shall be in OWNER=s name and provided to OWNER upon project completion.

**2.02 SCADA SOFTWARE (GENERAL)**

A. All I/O associated with the systems shall be represented in the SCADA system as well as derived tags. System development shall be consistent with the Owner's existing conventions. See also Section 13725. The following generic features shall be provided. If discrepancies arise; Section 13725 shall take precedence.

B. Alarm Processing

1. Alarm conditions shall automatically be brought to the operator's attention audibly and visually on the PC. The video terminal shall have reserved section for alarm display and/or a dedicated screen for displaying alarms. The capabilities of the specified software shall be utilized, including color changes, audible and visual annunciations, alarm logging to disk with time and date stamp, alarm acknowledgment written to disk with time and date stamp, alarm report generation upon operator demand shall be provided. Audible and flashing visual annunciation shall remain until acknowledgment by the operator. Non-flashing visual alarm shall remain until alarm clears. Alarms shall be provided with automatic reset.

C. Dynamic Screen Displays

1. Color dynamic screen displays shall be provided. All I/O as well as derived values and alarms shall be utilized and displayed on one or more screens. System developer shall use good judgment in developing logically oriented screens depicting the process. Dynamic bar graphs with text shall be used to represent analog values such as levels, alarm levels shall represent graphically and with text. Diagrams shall be developed to represent piping, pumps and the like. Consistent OWNER conventions shall be used regarding normally open/close states, alarm/normal states, running/non-running states for all equipment with I/O associated with it.

2. Provide man machine interface via keyboard and/or mouse. Operator shall have the ability to control all equipment. Control shall minimally include start/stop indicated equipment in the automatic mode. Control shall be provided to all equipment.

3. Operator shall have the status of all setpoints and the ability to modify those setpoints, timers and the like.

4. Color print outs of proposed screens shall be submitted for review and approval.

5. The screens of HMI shall depict the process as indicated by the Drawings.

   The following shall be provided as a minimum:

   a. The minimum screen shall be equal to and represent the "I" sheets.

6. All I/O shall be represented in the SCADA. Refer to the drawings and other specifications.

7. Provide historical and real time trending.

D. Detailed report generations shall be provided showing useful information for water applications. Report on demand as well as scheduled reports shall be provided. Coordinate with OWNER and provide reports per OWNER's requirements.

E. Submit reports for approval.

F. Provide data recording as indicated by the drawings or as noted.

G. Provide reports of data as may be directed by the OWNER.

1. Provide two (2) additional periodic reports as directed by the OWNER at start up.

H. Data Logging - Provide Historian

1. Provide data and trend logging of all analog parameters including but not limited to:

a. Levels

b. Pressures

c. Flows

d. Intrusion

I. SCADA reports shall be available on demand. All analog values shall be logged with a time and date stamp so that detailed interrogation of the data base shall be provided.

J. If there is a large fire flow at 8:00 pm, the OWNER shall have the ability to view the data as a historical trend or as discrete values for any period. Care shall be used to record dynamic data more often and less dynamic data less often.

1. Pressure at 8:00 was 50 psi

2. Flow at 8:00 was 4000 gpm

3. This data shall be available as a historical trend and display in graphic form.

K. Historical data retrieval and trending shall be available for all analog data. The Operator shall have the select parameter and period for display. The Operator shall have the ability to "drill down" in time resolution and display the data in greater resolution.

L. Provide system data storage archiving protocol. Provide instruction on how data is to be archived.

**2.03 HARDWARE**

A. Provide new hardware where indicated by drawings and other specifications.

**2.04 DRIVERS**

A. Provide all driver systems.

B. Provide drivers for Allen-Bradley as a minimum.

## PART 3 EXECUTION

### 3.01 PROGRAMMING AND CONFIGURATION (GENERAL)

A. Program and configure all SCADA and PLC Software.

B. Functional programming shall reside in the PLC system. SCADA interface shall reside in the computer system.

C. I&C INTEGRATOR shall configure system so the SCADA 1 and SCADA 2 are hot backups to each other. The video, keyboard and mouse connections shall work from either system. Under normal operation the video, keyboard and mouse shall be connected to SCADA 1.

D. When SCADA 1 fails, all the functions shall be available in SCADA 2 (and vice-versa). Operators shall disconnect the video, keyboard and mouse and shall reconnect it to SCADA 2. An alarm shall be issued. No data shall be lost.

### 3.02 LOAD

A. Load the SCADA system and indicated software.

### 3.03 TEST ALL SCADA SOFTWARE

A. Include testing of all software elements.

1. Test all I/O by primary element action, for example lift floats and confirm state change. Allow levels to rise and confirm analog data.

2. Test all trending and alarm screens.

B. Confirm all Operator control buttons.

C. Provide password protection of control. Coordinate with the OWNER.

### 3.04 PROVIDE SOFTWARE TO OWNER

A. Provide one (1) copy of all licensed, store bought software to the OWNER.

B. Provide two (2) copies of all final developed files to the OWNER.

END OF SECTION

**SECTION 13751**

**RTU SUBSYSTEM**

## PART 1 GENERAL

### 1.01 WORK INCLUDED

A. Provide all engineering, labor, materials, and equipment to furnish, install, adjust, test, startup, and document a fully functional RTU Subsystem as shown on the drawings and specified herein.

B. All equipment, software and programming furnished under this specification shall be new and unused, shall be the product of a manufacturer having a successful record of manufacturing and servicing the equipment specified herein for a minimum of five (5) years.

C. Like items of equipment provided hereunder shall be the end products of one manufacturer in order to achieve standardization for appearance, operation and maintenance.

D. All items specified herein this Section may not be specifically required for this project. I&C INTEGRATOR shall coordinate the requirements of this Section with the work required for proper completion of the project.

E. See CONTRACT CONDITIONS and Division 1, GENERAL REQUIREMENTS, which contain information and requirements which apply to the work specified herein and are mandatory for this project.

### 1.02 RELATED WORK SPECIFIED ELSEWHERE

A. Section 13725 - Loop Functions/Programming Strategies/Protocol.

B. Division 16 - Electrical.

### 1.03 GENERAL SCOPE REQUIREMENTS

A. Standard RTU shall be installed and configured at each location indicated on drawings.

B. RTU functions shall be as specified in Section 13725 - Loop Functions/Programming Strategies/Protocol.

## PART 2 PRODUCTS

### 2.01 GENERAL

A. RTU panel(s) shall be provided with a UL508 label and be manufactured by a UL508 panel manufacturer. Panel manufacturer shall submit proof of enrollment in U.L.=s custom builder=s program.

B. RTU panels shall be manufactured and provided by the I&C INTEGRATOR.

### 2.02 PROGRAMMABLE LOGIC CONTROLLER (PLC)

A. PLC shall be Micrologix 1400, 1766 Family as manufactured by Rockwell Automation, Inc.

**2.03 RADIO/MODEM SYSTEM**

A. Not applicable.

**2.04 ANTENNA AND ACCESSORIES**

A. Not applicable.

**2.05 BACKUP BATTERY**

A. 12 Volt, 7 amp hour backup battery.

B. Battery shall be Power-Sonic, PS-1270, or equal.

**2.06 RTU ENCLOSURE**

A. RTU panels shall be UL Listed, modified, NEMA 3R, Type 304 Stainless Steel enclosure with padlockable draw latches or 3-point padlockable handles conforming to the requirements of the National Electrical Manufacturer's Association.

B. In addition to the NEMA 3R standard, the panel shall conform to the following requirements:

1. Minimum metal thickness shall be 14-gauge.

2. All doors shall be rubber-gasketed with continuous hinge.

3. Provide Type 304 stainless steel drip shield.

4. Provide aluminum dead front panel for component mounting as shown on drawings.

5. Cabinet shall be mounted as indicated on the Drawings. Provide mounting ears as required. Field drilling of cabinet is prohibited.

6. Print pocket (full, 2 or 1/4 size) and one (1) set of reduced drawings shall be provided on interior side of door. (This requirement may be deleted where indicated on drawings.)

7. Minimum overall dimensions shall be as indicated by Drawings or as required by UL subject 508A for industrial control panels.

8. Provide door stop kits for outer cabinet door and dead front door.

9. Provide ARC flash label per N.E.C.

10. Enclosure shall have exterior white powder coat

C. Cabinet enclosure shall be as manufactured by Hoffman, or equal.

**2.07 MISCELLANEOUS RTU COMPONENTS**

A. 12 VDC power supply shall be Model MDR-60-12 as manufactured by Meanwell, or equal.

B. 12 to 24 VDC converter shall be Model S-25A-24 as manufactured by Meanwell, or equal.

C. RF surge suppressor shall be Part Number IS-B50LN-C2 as manufactured by Polyphaser Corporation, or equal.

D. Loop surge suppressors shall be Part Number DRS-036 as manufactured by EDCO, or equal.

E. Terminals shall be Dinnectors, DN-T10A, or equal.

F. Fuse holders shall be Bussman, CHM1D, or equal.

G. Fuses shall be Bussman, or equal.

H. Door switch shall be Square D, 9007AP221, or equal.

I. Other miscellaneous components not specified herein shall be as specified in Section 13700 - Process Instrumentation and Controls.

**2.08 PANEL ELECTRICAL**

A. Wiring

1. All electrical wiring shall be in accordance with the applicable requirements of Division 16 - Electrical. Wires shall be 600-volt class, PVC insulated stranded copper and shall be of the sizes required for the current to be carried, but not below 16 AWG enclosed in either sheet metal raceway or plastic wiring duct. Wiring for signal circuits shall be twisted shielded pairs not smaller than No. 18 AWG, and be separated at least 6 inches from any power wiring.

2. All panel wiring shall be labeled with T&B Shrink-Kon HVM marker system. Wire marker numbers shall agree with control panel provided terminals.

B. Terminal Blocks

1. Terminal numbers and wire numbers shall agree.

C. Wire Ducts

1. Wire duct shall be by Panduit, or equal.

D. Miscellaneous Features

1. Provide fluorescent courtesy light, convenience outlet, lightning arrestor, surge arrestor, loop power supplies (with surge protection specified herein), circuit breakers and power supply.

2. Items required shall be as indicated on the drawings.

**2.09 NAMEPLATES, NAME TAGS AND SERVICE LEGENDS**

A. All components provided under this section, both field and panel mounted, shall be provided with permanently mounted name tags bearing the entire ISA tag number of the components. Panel mounted tags shall be plastic; field mounted tags shall be stamped stainless steel.

B. Circuit breakers and all dead front panel items shall be clearly labeled by name, no tag number. Nameplates are defined as inscribed laminated plastic plates mounted under or near a panel face mounted instrument. Service legends are defined as inscribed laminated plastic integrally mounted on a panel face mounted instrument.

C. Service legends and nameplates shall be engraved, rigid, laminated plastic. Service legends and nameplates shall be fastened to the panel by screws or with a specially applied adhesive. Fastening shall not depend only on the adhesive backing of the nameplate. Unless otherwise noted, color shall be black with white letters and letter height shall be 3/16-inch.

D. Field mounted tags shall be 16-gauge, 304 stainless steel with 3/16-inch high characters.

E. Each panel shall be provided with a cabinet face mounted laminated nameplate as specified above. Unless otherwise noted, color shall be black with white letters 2-inch high.

**2.10 SPARE PARTS**

A. Furnish the manufacturer's recommended spare parts including at least the following:

1. None required.

B. All parts shall be furnished in containers which are clearly marked and identified as to the contents.

C. Provide spare parts bill of materials with submittals for approval.

**PART 3 EXECUTION**

**3.01 GENERAL**

A. New RTU(s) shall be installed at locations per Drawings.

**PART 4 LOOP SPECIFICATIONS**

**4.01 LOOP SPECIFICATIONS**

A. Control loop requirements shall be as specified in Section 13725 - Loop functions/Programming Strategies/Protocols and as shown by the Drawings.

END OF SECTION

**SECTION 13752**

**COMPUTERS AND ACCESSORIES**

## PART 1 GENERAL

### 1.01 WORK INCLUDED

A. Provide all hardware, SCADA software, labor and all documentation for a complete system. The OWNER shall be the licensed OWNER of all hardware and software. Work shall include but not be limited to the following:

1. Computer Systems.

2. Operating System.

3. Input/Output subsystem as required.

4. Communications equipment.

5. Cables and Connectors.

6. Provide and configure all drivers as a minimum:

   a. Allen Bradley
   b. Others as indicated or necessary for proper execution of work.

B. The computer system shall exchange data with SCADA system, PLC network and radio network.

C. The PC shall also have the capacity to perform general purpose data processing tasks without interfering with the prescribed use.

D. Coordinate with the OWNER/ENGINEER prior to the time of purchase. These specifications shall establish the level of quality for bidding purposes. Provide the latest version systems.

E. Upgrade specified or indicated hardware to run the specified software as may be required.

F. Like items of equipment provided hereunder shall be the end products of one manufacturer in order to achieve standardization for appearance, operation and maintenance.

G. See CONDITIONS OF THE CONTRACT and Division 1, GENERAL REQUIREMENTS, which contain information and requirements that apply to the Work specified herein and are mandatory for this project.

### 1.02 GENERAL SCOPE REQUIREMENTS

A. Computer system(s) and all accessories to accommodate or serve the needs of the RTU and SCADA system. This shall be a performance based specification and shall include the elements as indicated by the drawings or as specified in these specifications. The following minimum performance levels shall be provided, installed and made functional by the CONTRACTOR.

1. Provide servers as indicated. The SCADA system shall operate with any one server down without operator intervention.

2. The CONTRACTOR shall provide laptops for the OWNER's use. SCADA system development software shall be installed. The laptops shall go through the firewall of the virtual private network (VPN) and access the data base contained in the operating server. The intent is to allow the operator to take the laptops home and to use the laptops, if present, at the plant. Provide all labor and materials to accomplish this.

3. Refer to the electrical drawings ("E" sheets) which indicate general quantities of equipment and components to be provided. Provide all computer related hardware and software for a fully functional system.

**1.03 RELATED WORK SPECIFIED ELSEWHERE**

A. Section 13750 - SCADA System Software.

B. Section 13753 - Operator Console(s) and Accessories.

**1.04 SUBMITTALS**

A. Submittals shall be made in accordance with the requirements of Section 01300 - Submittals.

B. Shall clearly indicate conformance to the requirements of this specification. Along with standard literature, detailed system schematics and drawings shall be provided. A recommended spare parts list shall be provided.

C. Complete set of Operation and Maintenance Manuals shall be submitted in accordance with Section 01730 - Operation and Maintenance Data. O & M Manuals shall be provided prior to start-up.

D. Warranty information shall be submitted in accordance with Section 01740 - Warranties and Bonds.

**1.05 DELIVERY, STORAGE, AND HANDLING**

A. Proper shipping, storage and handling procedures shall be followed as recommended by the equipment MANUFACTURER and as specified herein.

B. All parts shall be properly protected so that no damage or deterioration will occur during shipment, normal unloading, storage and installation.

C. All equipment and parts must be properly protected against any damage during a prolonged storage period at the site. Proper job site storage is the responsibility of the CONTRACTOR.

D. Factory assembled parts and components shall not be dismantled for shipment unless permission is received in writing from the ENGINEER. This provision shall not apply if the items are too large to be shipped in a completely assembled condition.

E. Each box or package shall be properly marked to show its net weight in addition to its contents.

**1.06 WARRANTY**

A. The manufacturer, I&C Integrator and CONTRACTOR shall warrant the equipment being supplied to the OWNER against all defects in workmanship and materials for a period of two (2) year(s). Warranty period shall commence on Substantial Completion date as outlined in the GENERAL CONDITIONS. Warranties for all equipment installed under this contract shall run concurrently.

B. The MANUFACTURER's and I&C Integrator warranty period shall run concurrently with the CONTRACTOR's warranty period. No exception to this provision shall be allowed. The CONTRACTOR shall be responsible for proper storage of the equipment so as to remain in an "as shipped" condition. If the equipment remains in storage at the job site for longer than six (6) months, before installation, the CONTRACTOR shall provide factory service personnel for a complete inspection of the equipment. Any work necessary to restore the equipment to an "as shipped" condition will be the responsibility of the CONTRACTOR.

**PART 2 PRODUCTS**

**2.01 COMPUTER GENERAL REQUIREMENTS**

A. Manufacturer

1. The following specifications establish the minimum level of quality and quantities.

2. Manufacturer shall be one of the following:

a. Dell.

b. No substitutions.

B. Server Specifications (minimum requirements)

1. PowerEdge R740 Chassis with capacity for up to 8 hard drives.

7. Processor: Intel7 Xeon7 E5645.

8. Memory: 16 GB Memory, 2933 MHz, Dual Ranked UDIMM.

9. Operating System: Windows Server, latest edition

10. Hard Drive Configuration: RAID Controller

11. Hard Drives: 1TB Solid State Drive(s).

12. Primary Hard Drive: HD Multi-Select.

13. Power Cords: Power Cord, NEMA 5-15P to C13, wall plug, 10 feet.

14. Network Adaptor: On-Board Single Gigabit Network Adapter.

15. Offsite File/Data Backup, OWNER shall pay for service. CONTRACTOR shall configure regular file backup.

C. Work Station Specifications (minimum requirements each)

1. Keyboard: Wired Key Keyboard, Logitech, or equal.

2. Mouse: Wired Mouse, Logitech, or equal.

3. Documentation: Documentation, English.

**2.02 UPS SYSTEM**

A. Units shall be Best models or equal sized as required. Minimum size shall be 1500 VA.

1. Provide UPS system as indicated by plans.

2. For server applications, two full size units shall be provided. Each unit shall carry the full load of the system. Load shall consist of server computers, switches, media converters and all other electrical loads associated with the console. Units shall be plug and cord connected to allow easy reconnection of loads in the event of a UPS failure.

**2.03 LIGHTNING AND SURGE PROTECTION**

A. All power, data and communications interface shall be provided with TVSS surge protection.

B. Surge protection equipment shall be IT or an approved equal. Materials shall be manufacturer's standard product as it relates to the application.

C. Provide Ethernet cable surge suppressor at all computer and router/Modem, RJ45 Jacks.

**2.04 MISCELLANEOUS**

A. All cable adapters, extensions and connectors shall be provided.

B. Provide all materials for a complete and functional system.

C. Miscellaneous

1. Provide all cables, connectors, patch chords, power supplies, etc., for a complete and functioning system.

**2.05 PRINTERS**

A. Color Printer

1. Hewlett-Packard Desk Jet, latest version color printer, or latest equivalent.

2. Provide 2 spare black and 2 spare color cartridges.

3. Wireless printers

4. Printer shall be capable of printing letter size (8.5" x 11") and ledger size (11" x 17").

**2.06 WIRELESS ROUTER**

A. Netgear A/B/N 1500 M Bps, long range, MIMO Antennas, or equal.

**2.07 MODEM**

A. Owner furnished.

**2.08 ADDITIONAL EQUIPMENT**

A. Provide additional Blue Tooth equipment to support wireless equipment, as may be needed.

**2.09 CABLES**

A. Provide all power cables as may be required.

B. Provide all signal cables as may be required.

C. Provide extra-long video cables.

**2.10 MONITORS**

A. Monitors shall be provided as indicated on the drawings.

B. Provide Dell, LG or equal, the latest version.

C. Provide all mounting brackets and installation hardware.

**PART 3 EXECUTION**

**3.01 INSTALLATION AND CONFIGURATION**

A. Install and configure all hardware and software.

END OF SECTION

**SECTION 13759**

**MODIFICATIONS TO EXISTING FIELD PANELS, MCC=S AND PLC=s**

## PART 1 GENERAL

### 1.01 WORK INCLUDED

A. Furnish all engineering, field investigation, design, material and labor to complete the specified functional modifications of the existing systems specified herein and indicated on drawings.

B. The I&C Integrator shall modify control panels, field panels, MCC=s and the other facilities shown as specified. Provide field investigations, tagging of existing circuits, relays, relay sockets, hand selector control blocks, overload relays, terminals, TVSS equipment, wiring, wire tagging and the like. Provide shop drawings for all modified systems.

C. CONTRACTOR shall have the freedom and responsibility to modify the systems to produce the desired signals to the PLC/SCADA system. The following includes the minimum level of effort as set forth by the Contract Documents. The CONTRACTOR shall submit drawings, cut sheets and the like as may be needed to communicate to the OWNER and ENGINEER the modifications.

D. In general, the existing field panels have limited space. The signals, as indicated by the AI@ sheets or AE@ sheets, originate in the existing panels. These signals are used in the existing panels. This project includes locating the signals, tagging the signals, adding terminals or TVSS equipment, extending the signals to the new panel, including terminals or TVSS equipment, including relays or signal isolators in the new panels, using the relays or signal isolators to send the signals back to the original panel and extending the new signals to the PLC/SCADA system. The original control panel shall function as it did before the modification. Thus limiting the modifications to the original control panel.

**E. Provide U.L. field inspection and labels for all modified U.L. listed control panels, motor control centers and the ATS.**

F. Like items of equipment provided hereunder shall be the end products of one manufacturer in order to achieve standardization for appearance, operation and maintenance.

G. See CONTRACT CONDITIONS and Division 1, GENERAL REQUIREMENTS, which contain information and requirements which apply to the work specified herein and are mandatory for this project.

### 1.02 RELATED WORK SPECIFIED ELSEWHERE

A. Section 13700 - Process Instrumentation and Controls

B. Section 13710 - Programmable Logic Controller

C. Section 13725 - Loop Functions/Programming Strategies/Protocols

## 1.03 SUBMITTALS

A. Submittals shall be in accordance with Section 01300 - Submittals.

B. Provide wiring diagrams of modifications to be completed, including panel elevations.

C. Catalog information on all devices required and furnished for the modification.

D. I&C Integrator shall submit post-construction as-built drawings of all completed modifications.

## 1.04 DEFINITIONS

A. Definitions per Section 13700 - Process Instrumentation and Controls shall apply to this section.

## 1.05 WARRANTY

A. The manufacturer, I&C Integrator, and CONTRACTOR shall warrant the equipment being supplied to the OWNER against all defects in workmanship and materials for a period of two (2) year(s). Warranty period shall commence on Substantial Completion date as outlined in the GENERAL CONDITIONS. Warranties for all equipment installed under this contract shall run concurrently.

B. The MANUFACTURER's warranty period shall run concurrently with the CONTRACTOR's warranty period. No exception to this provision shall be allowed. The CONTRACTOR shall be responsible for proper storage of the equipment so as to remain in an "as shipped" condition. If the equipment remains in storage at the job site for longer than six (6) months, before installation, the CONTRACTOR may be required to provide factory service personnel for a complete inspection of the equipment. Any work necessary to restore the equipment to an "as shipped" condition will be the responsibility of the CONTRACTOR.

# PART 2 PRODUCTS

## 2.01 GENERAL

A. Materials and components shall be as specified in Section 13700 - Process Instrumentation and Controls.

# PART 3 EXECUTION

## 3.01 MAIN WTP

A. Refer to drawings for modification requirements.

## 3.02 R. L. PRATT WTP

A. Refer to drawings for modification requirements.

END OF SECTION

**SECTION 13753**

**OPERATOR CONSOLES AND ACCESSORIES**

## PART 1 GENERAL

### 1.01 WORK INCLUDED

A. Design, engineering, fabrication, delivery and installation of modular, flexible equipment consoles and accessory items.

B. Like items provided hereunder shall be the end products of one manufacturer in order to achieve standardization for appearance, operation and maintenance.

C. See CONTRACT CONDITIONS and Division 1, GENERAL REQUIREMENTS, which contain information and requirements which apply to the Work specified herein and are mandatory for this project.

### 1.02 RELATED WORK SPECIFIED ELSEWHERE

A. Section 13752 - Computers and Accessories.

### 1.03 SUBMITTALS

A. Submittals shall be made in accordance with Section 01300 - Submittals.

B. Provide shop drawings including dimensions of individual components, profiles, finishes, attachments, accessories, utility/service requirements and locations.

B. Provide manufacturer=s installation, operation and maintenance instructions.

### 1.04 WARRANTY

A. The manufacturer, I&C Integrator and CONTRACTOR shall warrant the equipment being supplied to the OWNER against all defects in workmanship and materials for a period of ONE (1) year(s). Warranty period shall commence on Substantial Completion date as outlined in the GENERAL CONDITIONS. Warranties for all equipment installed under this contract shall run concurrently.

B. The MANUFACTURER's and I&C Integrator warranty period shall run concurrently with the CONTRACTOR's warranty period. No exception to this provision shall be allowed. The CONTRACTOR shall be responsible for proper storage of the equipment so as to remain in an "as shipped" condition. If the equipment remains in storage at the job site for longer than six (6) months, before installation, the CONTRACTOR shall provide factory service personnel for a complete inspection of the equipment. Any work necessary to restore the equipment to an "as shipped" condition will be the responsibility of the CONTRACTOR.

## PART 2 PRODUCTS

### 2.01 MANUFACTURER

A. Operator consoles shall be manufactured by:

1. Evans Consoles, Inc., 1930 Maynard Rd. Se, Calgary, Alberta, Canada T2E6J8. Tel: (403) 291-4444.
2. Or equal.

B. Consoles shall be provided by the plant wide I&C Integrator.

### 2.02 OPERATOR CONSOLES

A. Evans **Strategy**; low profile, modular system console system or equal.

B. Finishes and colors shall be selected by the OWNER, Evans System high pressure laminate. Console base - provide color guide; Horizontal work surfaces - provide color guide. Provide paint chips for OWNER=s use in selection of colors.

C. Provide power bars as may be required and as minimally indicated on plans.

D. Provide separate segregated raceway system for all computer cables.

E. Provide grommets and other insulated cut-outs as may be required.

F. Provide flat screen LCD monitor mounting arm assembly(s).

## PART 3 EXECUTION

### 3.01 FIELD MEASUREMENTS

A. CONTRACTOR shall obtain and provide field measurements to operator control console manufacturer. Do not scale from drawings.

B. Provide final measurements for improvements to location of console installation.

C. Provide final measurements for all equipment to be housed in or installed on the console.

### 3.02 STORAGE AND HANDLING

A. Follow manufacturer=s written recommendations.

### 3.03 PREPARATION

A. Provide preparation for all interconnection including, but not limited to:

1. Power
2. Ethernet
3. Video
4. Keyboards
5. Mice

**3.04 INSTALLATION**

A. Follow manufacturer=s written installation and maintenance requirements.

**3.04 CLEANING AND PROTECTION**

A. Follow manufacturer=s written recommendations.

**END OF SECTION**

# Village of Palm Springs

PUBLIC SERVICE DEPARTMENT

**SCADA SYSTEM UPGARDE**
**ITB# 2021B-003**
**Addendum No. 1**
**February 1, 2021**

---

**BIDS DUE: 2:00 PM, Local Time, March 18, 2021**

---

TO ALL VENDORS BIDDING ON THIS PROJECT:

The changes, additions, substitutions, and/or deletions contained in Addendum No. 1 are hereby made a part of the Bid Documents for the **SCADA System Upgrade Project**, fully and completely as if the same were fully set forth herein.

**IN THE PLANS**

No changes

**IN THE SPECIFICATIONS**

1. Bid due date has changed from 2:00 PM local time on February 11, 2021 to 2:00 PM local time on March 10, 2021.
2. Due date for the Deadline for Submissions of Questions has changed from 5:00 PM local time on January 29, 2021 to 5:00 PM local time on February 26, 2021.

Receipt acknowledged and conditions agreed to the _____ day of _____, 2021.

_____ _____

Bidder By

END OF ADDENDUM

# Village of Palm Springs

226 Cypress Lane • Palm Springs, Florida 33461-1699
561-965-4010 • www.vpsfl.org


## SCADA System Upgrade Main Water Treatment Plant (Main WTP)

## Bid No.: 2021B - 003

## Addendum No. 2

## February 16, 2021

---

**BIDS DUE: 2:00 PM, Local Time, March 10, 2021**

---

TO ALL VENDORS BIDDING ON THIS PROJECT:

The changes, additions, substitutions, and/or deletions contained in Addendum No. 2 are hereby made a part of the Bid Documents for the SCADA System Upgrade Main Water Treatment Plant (Main WTP) fully and completely as if the same were fully set forth herein.

**A. QUESTIONS FROM BIDDERS**

1. **Question:** Dwg. 39 Sheet E-04 shows the Remote I/O-MCP enclosure located in the southwest corner of the Chemical Building control room between the ATS and outer wall. There is a covered access in the floor (see attached picture) with its edge 19 in. from the backwall. The minimum enclosure depth available is 18 in. and with the requirements for Equipment Pad – Type C on Dwg. 70 Sheet ED-02 to extend a minimum of 2 in. around the enclosure, it would result in the access being partially covered. How do you wish to proceed?

   **Answer:** Remote I/O – MCP shall be relocated to east end of existing MCCA. Remote I/O- MCP panel shall be revised to wall mounted panel at this location. Drawing 39 shall be revised to indicate this revision.

2. **Question:** Dwg. 32 Sheet I-21 and Dwg. 38 Sheet E-03 show the lift station RTU communicating via fiber optic cable to the Remote I/O-MCP but Dwg. 61

Sheet E-26 shows a radio and antenna connection. Please verify the communication method.
**Answer:** Communication method shall be via fiber optic.

3. **Question:** The lift station control panel has been retrofitted with a Diversified Electronics Duplex Controller (please see attached pictures). Nearly all the I/O identified in Dwg. 32 Sheet I-21 Dwg. 61 Sheet E-26 are unavailable in its current condition. How do you wish to proceed?
**Answer:** Existing Main LS Control Panel shall remain as is. All I/O connections from this panel to RTU shall be future.

4. **Question:** Dwg. 40 Sheet E-05 Note 5 calls for the removal and replacement of the level transmitters with matching type. With the customer standardizing on the Vegapuls level sensor throughout their system, could it be used in this process?

   **Answer:** Existing Filter Level Transmitters shall be replaced in kind per drawing E-05, Note 5. The replacement level transmitter is specified in Section 13700 - Process Instrumentation and Controls, page 8, Article 2.04

5. **Question:** The IO count for the High Service Pump PLC -9-2 will use all available points available on the MicroLogix 1400 and expansion modules. This leaves no spares for future expansion. Can we use the CompactLogix model instead?

   **Answer:** Yes CompactLogix model may be used.

6. **Question:** Dwg. 27 Sheet I-16 lists the IO for the Remote I/O-WWR panel. The IO count is comparable to that of a standard VOPS lift station RTU. Can the lift station RTU design be used instead of the one called for in Dwg. 62 Sheet E-27? It would provide NEMA 4X integrity along with a proven tolerance to the south Florida heat. There is sufficient space in the layout for future IO expansion and the cost savings would be significant.

   **Answer:** Remote I/O – WWR Panel shall remain as indicated on Drawings E-12 and E-27.

7. **Question:** What are the specifications for the fiber optic network? Single or multi-mode cable, number of fibers, etc.

   **Answer:** Fiber Optic Cable shall be as Specified in Section 13710.

8. **Question:** Section 13759 1.01 E States that a UL Field Inspection will required on any UL panel modified during the project. Some of these panel have

already been modified from there original state. What if the panel is out of UL compliance prior to work being done on them? Who's responsible for correcting those?
**Answer:** UL Field Inspection shall not be required.

9. **Question:** What is the purpose of the Operator Interface? Is it for the local PLC only or to allow the operators to see the entire plant?
**Answer:** To Allow Operators to see the entire plant.

10. **Question:** Sheet I-12 calls for the existing flow indicators to be reused. How do we build a new FP-4-2 without removing them form the existing panel and bringing them to the shop for installation and wiring?
**Answer:** Existing Magmeters and wall mounted displays shall remain as is and in operation. These existing devices will not be relocated to new panel FP-4-2.

11. **Question:** Sheet I-12. Please verify we are adding analog speed commands to each of the existing chemical pumps.
**Answer:** Analog Speed commands are not required to the existing NaOCl pumps.

12. **Question:** Sheet I-12. Are the TU #1,2,3 INF FLOW to be hardwired of transmitted from Remote I/O-MCP to PLC-4-2 via the network?
**Answer:** These flow signals are transmitted to PLC-4-2 via the network, as noted on drawing I-12.

13. **Question:** Section 13725 4.04 E discusses a local Operator Interface HMI for the FP-4-2, there are none shown in the drawings. Does FP-4-2 get an Operator Interface?
**Answer:** There is no requirement for an operator interface at panel FP-4-2.

14. **Question:** Sheet I-10 shows hardwired signals from the contact basin VFDs to the Remote I/O-MCP. Doesn't the FP-5-1 monitor those points?
**Answer:** Yes, and future ethernet cable shall be ran from Remote I/O - MCP to each Transfer Pump VFD.

15. **Question:** Sheet I-13 shows THM FAN CONTROLS hardwired to the Remote I/O-MCP. What is the THM Fan? What is the control scheme?

**Answer:** I-13 is incorrect THM fans are controlled from FP-5-1, see drawing E-21.

16. **Question:** Sheet I-14 shows BACKWASH BLOWER AND BACKWASH PUMP CONTROLS hardwired to the Remote I/O-MCP. Doesn't FP-5-1 control those points?
**Answer:** I-14 is incorrect Backwash Blowers and backwash pumps are controlled from FP-5-1, see drawing E-21.

17. **Question:** Sheet E-22. Is the new FP-5-1 going to use the same style cabinet that exists there now?
**Answer:** Yes**.** See drawing E-22.

18. **Question:** Do the fiber optic runs fall under the I&C Integrators scope of work?
**Answer:** I&C Integrator is responsible for all fiber components and hardware to be incorporated with the panels and computer systems. I&C Integrator is responsible for all fiber connections. Fiber cable can be furnished and installed by I&C integrator or Electrical Contractor.

19. **Question:** Drawing E-15 shows video cable 1 ¼" conduit, UPS power ¾" conduit, I-2,4 ¾ "conduit, and I-6 ¾" conduit all noted concealed behind drywall. Will drywall be required at this location? Will furring be required? Please show limit of work required. Will the drywall require painting? Please provide specifications for these trades.
**Answer:** Proposed conduit/raceways can be concealed above the drop ceiling or installed on walls behind SCADA console or within PVC wire Mold. Exposed wire mold or conduit shall be painted to match wall. Removal/replacement of drywall or furring strips will not be required. Following completion of the SCADA and computer equipment installations the east and north walls of SCADA room shall be painted per Specifications Section 09900 – Protective Coatings, Page 14, System No. 109E.

20. **Question:** Drawing E-29 What PLC hardware is required in "full size rack" noted in replacement PLC 3-8 diagram?
**Answer:** "Full Size Rack" note is erroneous and shall be deleted. PLC hardware for existing HSP control panel, FP-9-2, shall be as indicated on Drawing E-12.

21. **Question:** Drawing E-05 What is the length of the capacitance probe required for the level transmitters?
**Answer:** Estimated probe length is 11.0 Feet. Actual length to be confirmed by CONTRACTOR during shop drawing submittal and approval phase.

22. **Question:** Section 03300 1.07 Testing. Verify this testing will be required for small patch pours of sidewalks.
**Answer:** Testing requirement for concrete patching shall be deleted.

23. **Question:** Please provide specifications for Fiber Optic Cable.

**Answer:** Fiber optic cable specification has been added to specifications section 13710.

24. **Question:** The Table of Contents list Division 16 Electrical. My documents (Specifications) do not have Sections 16000, 16001 or 16050. Please provide them.
**Answer:** Missing Specifications sections, 16000, 16001 and 16050 shall be provided via addendum No. 2.

25. **Question:** Please extend the bid date one week.
**Answer:** Village has extended the bid opening to March 10, 2021, per Addendum No. 1

26. **Question:** Regarding the requirement to have a General Contractor's License, would having a subcontractor with a GC license qualify for this requirement, or does the prime contractor need to have the GC license?

**Answer:** Prime Bidder/Contractor shall be a Florida Licensed General Contractor per Specifications Section 00200 – Instructions to Bidder's, Page 1, Article 3.01, B.

27. **Question:** The audio was bit garbled during the pre-bid meeting, please confirm the construction budget is $672,000
**Answer:** Engineer's Opinion of probable construction cost is $ 816,000.

28. **Question:** Please advise when this construction budget was established.

**Answer:** The Engineer's opinion of probable construction cost was established in September 2019.

29. **Question:** Please provide a list to identify which panels are ControLogix and those that are MicroLogix.
**Answer:** Recommendations of MicroLogix or ControLogix have been indicated on the network diagrams. It shall be the responsibility of the I&C Integrator select and finalize the design based on individual panel I/O requirements. The selections shall be finalized during the submittal approval process.

30. **Question:** Please make available an I/O list for each corresponding control panel both new and modified.
**Answer:** I/O requirements are indicated throughout the drawings.

31. **Question:** Please advise the tag count necessary for referenced VT SCADA licenses in section 13750.

**Answer:** Existing software license tag count is 25,000, proposed upgraded license tag count is 10,000.

32. **Question:** Section 13710 2.07 Industrial PC specified a Phoenix Contact Model 2913108. The response from my supplier. "The requested IPC is obsolete. Please have customer look at our VL2PPC 2000-2402760 or our BL2 PPC1100-1105780. I must point out that the BL2 product only has Windows 10 IOT options." Please advise.

**Answer:** Industrial PC specification will be updated.

33. **Question:** Will temporary wiring be necessary for any of this work?
**Answer:** Temporary wiring may be necessary for proper completion of the work, depending on CONTRACTOR's work plan and means and methods.

34. **Question:** Item 1 refers to a failover scheme between SDADA 1 and 2with the operator needing to do nothing to continue operation, but the diagram shows using SCADA 1 as the workstation. Operator will have to move keyboard, mouse and video connections if a failover occurs. Is this the intent of the design?
**Answer:** Additional monitor, keyboard and mouse will be added for the hot-backup runtime server.

35. **Question:** Item 2 lists requirements related to laptops but there are no actual laptop specs, and the laptops are not depicted on the drawings. Are we providing them with laptops and if so, what do they want and how many of them do they need?
**Answer:** laptops are not required.

36. **Question:** Item 3 lists requirements related to a workstation. This probably refers to using SCADA 1 as a workstation along with the monitors and mouse and keyboard-need this confirmed by Engineer.
**Answer:** Correct, these are the interface items for the server. A second group will be added for the backup server, per question 34 above.

**B. SPECIFICATIONS**

1. Section 00111 – Advertisement for Bid, page 1 of 1, first paragraph, **Change Bid Opening Date "February 11, 2021" to** "**March 10, 2021"**.

2. Section 00451 – Qualification Statement, page 5 of 8, Article 10 Financial Information, **Clarification Made to Highlighted Yellow Paragraph.**

3. Section 13700 – Process Instrumentation and Controls, page 18, Article2.17, paragraph B, **ADD,** "12. Where indicated on drawings, provide interior and exterior white powder coating."

4. Section 13700 – Process Instrumentation and Controls, page 18, Article2.18, paragraph B, **ADD,** "12. Where indicated on drawings, provide interior and exterior white powder coating."

5. Section 13700 – Process Instrumentation and Controls, page 23, Article2.23, paragraph A, **ADD,** "1. None."

6. Section 13710 – Programmable Logic Controller, **DELETE AND REPLACE THIS SECTION IN ITS ENTIRITY.** The following articles were modified or added: 1.06, 2.03, 2.04, 2.05, 2.06, 2.07, 2.08, 2.09, 2.10, 2.11, 2.12,2.13, and 2.14.

7. Section 13711 – Existing SCADA System Modifications, **DELETE AND REPLACE THIS SECTION IN ITS ENTIRITY.** The following articles were modified or added: 2.01 and 2.03.

8. Section 13725 – Loop Functions/Programming Strategies/Protocol, page 19, Article 4.04, E,1, **DELETE** "…local HMI and…"

9. Section 13750 – SCADA System Software, **DELETE AND REPLACE THIS SECTION IN ITS ENTIRITY.** The following articles were modified or added: 1.03 and 2.01.

10. Section 13752 – Computers and Accessories, Page 2, Article 1.02, A, 2, **DELETE THIS ARTICLE IN ITS ENTIRITY.**

11. Section 13752 – Computers and Accessories, Page 3, Article 2.01, B, **ADD THE FOLLOWING:**

12. Section 13759 – Modifications to Existing Field Panels, MCC's and PLC's, Page 1, Article 1.01, E, **DELETE THIS ARTICLE IN ITS ENTIRITY.**

13. Section 16000 – Electrical General Requirements, **ADD THIS SECTION TO THE SPECIFICATIONS BOOKLET.**

14. Section 16001 – Electrical Demolition, **ADD THIS SECTION TO THE SPECIFICATIONS BOOKLET.**

15. Section 16050 – Basic materials and Methods, **ADD THIS SECTION TO THE SPECIFICATIONS BOOKLET.**

## C. DRAWINGS

1. The following Drawings have been modified to address the questions from Bidders listed above:

Drawing No. 21 of 70, Sheet I-10, Unit Process 4 – Disinfection (Contact Basin).

Drawing No. 23 of 70, Sheet I-12, Unit Process 4 – Disinfection (NaOCl Feed Pumps).

Drawing No. 24 of 70, Sheet I-13, Unit Process 5 – Filtration.

Drawing No. 25 of 70, Sheet I-14, Unit Process 5 – Filtration.

Drawing No. 32 of 70, Sheet I-21, Unit Process 0 – Support Systems (Main Lift Station).

Drawing No. 38 of 70, Sheet E-03, Electrical Site Plan Details.

Drawing No. 39 of 70, Sheet E-04, Chemical Feed Building Electrical Plan.

Drawing No. 45 of 70, Sheet E-10, Network Diagrams (Sheet 2).

Drawing No. 46 of 70, Sheet E-11, Network Diagrams (Sheet 3).

Drawing No. 47 of 70, Sheet E-12, Network Diagrams (Sheet 4).

Drawing No. 48 of 70, Sheet E-13, Network Diagrams (Sheet 5).

Drawing No. 49 of 70, Sheet E-14, Network Console Details.

Drawing No. 50 of 70, Sheet E-15, Network Riser Diagrams.

Drawing No. 51 of 70, Sheet E-16, FP-4-2 NaOCl Feed System Panel Replacement (Sheet 1).

Drawing No. 52 of 70, Sheet E-17, FP-4-2 NaOCl Feed System Panel Replacement (Sheet 2).

Drawing No. 56 of 70, Sheet E-21, FP-5-1 Filter Control Panel Modifications (Sheet 4).

Drawing No. 58 of 70, Sheet E-23, Remote IO - MCP (Sheet 1).

Drawing No. 59 of 70, Sheet E-24, Remote IO - MCP (Sheet 2).

Drawing No. 60 of 70, Sheet E-25, Remote IO - MCP (Sheet 3).

Drawing No. 61 of 70, Sheet E-26, Main Lift Station Remote Telemetry Unit.

Drawing No. 63 of 70, Sheet E-28, Remote IO – Washwater Recovery (Sheet 2).

Drawing No. 64 of 70, Sheet E-29, MIEX Transfer Control Panel Modifications (Sheet 1).

Drawing No. 65 of 70, Sheet E-30, MIEX Transfer Control Panel Modifications (Sheet 2).

Drawing No. 68 of 70, Sheet E-33, Specific Details – Electrical.

All modifications to the above list of drawings have been identified with a revision triangle.

Receipt acknowledged and conditions agreed to the _____ day of _____, 2021.

_____ _____

Bidder By

END OF ADDENDUM

# Village of Palm Springs

226 Cypress Lane • Palm Springs, Florida 33461-1699
561-965-4010 • www.vpsfl.org


## SCADA System Upgrade Main Water Treatment Plant (Main WTP)

## Bid No.: 2021B - 003

## Addendum No. 3

## March 8, 2021

---

**BIDS DUE: 2:00 PM, Local Time, March 10, 2021**

TO ALL VENDORS BIDDING ON THIS PROJECT:

The changes, additions, substitutions, and/or deletions contained in Addendum No. 2 are hereby made a part of the Bid Documents for the SCADA System Upgrade Main Water Treatment Plant (Main WTP) fully and completely as if the same were fully set forth herein.

**A. QUESTIONS FROM BIDDERS**

1. **Question:** Deskjet Printers don't support 11x17, Officejet appeared to have the cheapest alternative.

   **Answer:** Provide Officejet or equal.

2. **Question:** "extra long video cables" is hard to price. After a certain length you have to turn to active signal repeating cables, which can extend the price. Same goes with USB devices. A length is really needed.

   **Answer:** Cable lengths required can be estimated from the scaled drawings of the Bid documents.

3. **Question:** LG and most other leading display companies only make models in 55" and 65", but not 60".

   **Answer:** Provide a 65" monitor in place of indicated 60" Monitor.

4. **Question:** They want 3 monitors from a server…this isn't a correct usage case for a server. A server is only going to come with 1 VGA. We need a workstation with a GPU to run three monitors for the workstation. I would suggest keeping the servers and adding a workstation under the monitor desk.

   **Answer:** Provide Dell workstation of equivalent class/configuration as SCADA Servers, with capability to drive multiple video monitors to match system configurations. Provide a dedicated keyboard and mouse for the video workstation and a dedicated keyboard and mouse for the servers. Workstation shall have a client license. Workstation shall be selected by system integrator with approval by ENGINEER during the shop drawing submittal approval process.

5. **Question:** it says Netgear wireless router in the specs, but the drawings only refer to a VPN router and firewall. Netgear doesn't make a business class firewall/vpn device. They have a home device, with some capabilities, but this isn't suggested for a business environment.

   **Answer:** Provide business class router/firewall/VPN devices as manufactured by Cisco or equal. Model /part number(s) shall be selected by integrator based on system configuration requirements.

6. **Question:** Raid controller presumed to be configured in a mirrored Raid 1.

   **Answer:** Raid controller shall be configured as Mirrored Raid 1 so data is identically written on two drives, if one drive fails there is an existing mirror copy ready to be used.

**B. SPECIFICATIONS**

1. No revisions.

**C. DRAWINGS**

1. No revisions.

All modifications to the above list of drawings have been identified with a revision triangle.

Receipt acknowledged and conditions agreed to the _____ day of _____, 2021.

_____ _____

Bidder By

END OF ADDENDUM

# CAPITAL IMPROVEMENT PROJECT DETAIL

**PROJECT #** 19-UTL-563-02

**Project Name:** Main WTP SCADA System Improvements
**Department:** Public Service
**Location:** Utilities - Main WTP
**Project Manager:** DBurgin
**Original Plan Date:** FY20

## DESCRIPTION / JUSTIFICATION:

The existing Supervisory Control And Data Acquisition (SCADA) system used for controling the water treatment process in the Main Plant is outdated and in need of upgrading. The existing system consistes of several separate systems used for controlling different parts of the treatment process. Plant operators must go to different locations to monitor each seperate system. This will be replaced with an integrated SCADA system which will enable the plant operators to monitor and control the entire treatment process from one location.



## PROJECT EXPENDITURES / FUNDING SOURCES:

| PROJECT COSTS: | FY20 | FY21 | FY22 | FY23 | FY24 | FY25 | TOTAL |
|---|---|---|---|---|---|---|---|
| Land/Easement Acquisition | | | | | | | - |
| Engineering & Planning | 27,500 | | | | | | 27,500 |
| Construction | 322,500 | 842,000 | | | | | 1,164,500 |
| Equipment | | | | | | | - |
| **TOTAL PROJECT COSTS** | **350,000** | **842,000** | **-** | **-** | **-** | **-** | **1,192,000** |

| SOURCES OF FUNDS: | FY20 | FY21 | FY22 | FY23 | FY24 | FY25 | TOTAL |
|---|---|---|---|---|---|---|---|
| General Fund - Public Works (01441) | | | | | | | - |
| Water & Sewer Enterprise Fund (41336) | 67,000 | 350,000 | | | | | 417,000 |
| Stormwater Enterprise Fund (42338) | | | | | | | - |
| Unfunded | | | | | | | |
| **TOTAL PROJECT REVENUE** | **67,000** | **350,000** | **-** | **-** | **-** | **-** | **417,000** |

## OPERATIONAL IMPACT

Note: No additional operating costs are expected as a result of this project.

| OPERATIONAL IMPACT | FY20 | FY21 | FY22 | FY23 | FY24 | FY25 | TOTAL |
|---|---|---|---|---|---|---|---|
| Additional Revenues | | | | | | | |
| Charges for Services | | | | | | | - |
| Other Revenues | | | | | | | - |
| Less Additional Expenditures | | | | | | | |
| New Personnel | | | | | | | - |
| Maintenance and Other Operating | | | | | | | - |
| Contracts & Leases | | | | | | | - |
| Non Operating (Debt Service) | | | | | | | - |
| **Net Annual Impact on Operations** | **-** | **-** | **-** | **-** | **-** | **-** | **-** |

| FUNDING SOURCES | FY20 | FY21 | FY22 | FY23 | FY24 | FY25 | TOTAL |
|---|---|---|---|---|---|---|---|
| Water & Sewer Enterprise Fund (41336) | | | | | | | - |
| **Total** | **-** | **-** | **-** | **-** | **-** | **-** | **-** |

# Village of Palm Springs

# Executive Brief

**AGENDA DATE:** May 13, 2021

**DEPARTMENT:** Public Service

---

**ITEM 6.18:** Approve Emergency Generator Improvements - Wells 11,15 & LS 9 Award (Task Order Nos. 264, 265 & 267) - Invitation to Bid (ITB) - Public Service Department (FY 2021 Budget Funded - Water & Sewer Enterprise Fund) - Eau Gallie Electric

**SUMMARY:** The Public Service Department has identified a need for the installation of emergency generators at two of our raw water wells and one of our lift stations. The proposed project is located at wells No. 11, 15 and lift station No. 9 and would assist in the continued operation of the wells and lift station during power outages, allowing the Utility Division to continue to distribution/supply of water and the collection of sewer during severe weather events. The proposed project consists of the supply and installation of three (3) new generators for wells No. 11, 15 and lift station No. 9, including all required concrete, conduit, automatic transfer switches and electrical components to allow the generators to turn on and operate automatically during a power outage.

To ensure the lowest possible price for this project, staff issued an Invitation to Bid (ITB) on January 21, 2021 for Emergency Generator Improvements. This process was completed by the Village through a competitive bid selection process - Emergency Generator Improvements (ITB No. 2021B-004 - January 21, 2021).

Within the Fiscal Year 2021 Budget - Water & Sewer Enterprise Fund and the Capital Improvement Plan (CIP), the Village Council approved $846,555.00 for Emergency Generator Improvements.

As a result of the Village's ITB, the following seven (7) bid proposals were received:

| Vendor | Total Bid |
|---|---|
| Cruz Electrical Corp | $243,700 (Incomplete) |
| Eau Gallie Electric | $416,000 |

| | |
|---|---|
| All Florida Contracting Service | $478,650 |
| Hinterland Group Inc. | $486,300 |
| Zabatt Inc. | $541,732 |
| Lawrence Lee Construction Services, Inc. | $553,000 |

Note: The Village's consultant engineering firm, Holtz Consulting, and the Village Attorney and the Assistant Public Service Director/Engineer, and Public Service Project Manager reviewed the bids received and identified one (1) bid proposal that was deemed unresponsive and was rejected (Cruz Electric did not provide audited financial statements or list of subcontractors and did not fully demonstrate their qualifications to perform the work and, thus, failed to meet the bid requirements in accordance with Section 00200, Article 19, and was rejected). As a result, the second lowest bid received was provided by Eau Gallie Electric in the amount of $416,000. Eau Gallie Electric provided a complete bid package with required documents and maintains the required State of Florida General Contractor License and meets the requirements set forth within the bid project manual.

The Village's Purchasing Code - Section 58-5(4)a - Competitive Selection Purchase Requirements, provides that the Village Manager shall have the authority to reject any and all bids, proposals, or other responses if he determines that it is in the best interest of the Village to do so.

Thus, after review of the seven (7) bids received, the Assistant Public Service Director/Engineer, the Public Service Project Manager, the Utilities Superintendent, the Village Attorney and Holtz Consulting have determined that Eau Gallie Electric provided the lowest responsible and responsive bid. As a result, staff is recommending that the Council award this proposed contract (Task Order #264, 265 & 267) to the lowest responsive and responsible bidder, Eau Gallie Electric in the amount of $416,000.

Note: The proposed bid amount submitted by Eau Gallie Electric is lower than the cost estimate ($657,000) by approximately 37%. The total approved budget for FY 2021 for this project is $846,555.00; however, staff believes that approximately $266,000.00 will be spent during the FY 2021 fiscal year. This project is expected to roll-over into the next fiscal year (FY 2022) and the remaining funding of $150,00.00 to complete this project is expected to be requested to be approved by the Village council during the upcoming FY 2022 budget process.

If approved, the Village would accept Eau Gallie Electric's pricing including all terms, conditions, and pricing as submitted within their ITB proposal and proposed contract. The Village will not expend more than the amount in the approved budget as it may be adopted/amended each year for these goods and services over the term of this contract.

If approved the project is expected to take approximately 240 days (January 2022) to complete following the Notice to Proceed from the Village.

The proposed agreement was prepared by the Village Attorney and reviewed by the Assistant Public Service Director/Engineer, the Public Service Project Manager, the Utilities Superintendent and the Finance Director.

The Village has not worked with the proposed vendor previously; however, the Village has received positive references from four (4) municipalities [Tampa Bay Water, City of Cocoa Beach, City of Naples, and City of Melbourne] and one (1) government agency [NOAA] for the proposed vendor.

**FISCAL IMPACT:**

Funding to support Task Order #264, 265 & 267 is available within FY 2021 Budget - Water & Sewer Enterprise Fund.

| ***Allocated/Estimated Project Funding:*** | ***Amount:*** |
|---|---|
| FY 2020 Actual Funding - Water & Sewer Fund - Well No. 15 | $ 12,518.13 |
| FY 2020 Actual Funding - Water & Sewer Fund - Well No. 11 | $ 11,843.13 |
| FY 2020 Actual Funding - Water & Sewer Fund - LS No. 9 | $ 11,943.13 |
| FY 2021 Approved Funding - Water & Sewer Fund: Emergency Generator Well No. 15 | $207,185.00 |
| FY 2021 Approved Funding - Water & Sewer Fund: Emergency Generator Well No. 11 | $207,185.00 |
| FY 2021 Approved Funding - Water & Sewer Fund: Emergency Generator LS No. 9 | $282,185.00 |
| FY 2022 Requested Budget - Water & Sewer Fund | $150,000.00 |
| **Total Allocated/Approved Budget** | **$882,859.39** |

| ***Expected/Actual Project Costs:*** | ***Amount:*** |
|---|---|
| FY 2020 Project Cost - Actual Engineering & Design - Water & Sewer Fund: Emergency Generator Well No. 15 | $ 12,518.13 |
| FY 2020 Project Cost - Actual Engineering & Design - Water & Sewer Fund: Emergency Generator Well No. 11 | $ 11,843.13 |
| FY 2020 Project Cost - Actual Engineering & Design - Water & Sewer Fund: Emergency Generator LS No. 9 | $ 11,943.13 |
| FY 2021 Project Cost - Actual Remaining Engineering Costs (TO #264) Well 15: | $ 9,356.87 |
| FY 2021 Project Cost - Actual Remaining Engineering Costs (TO #265) Well 11: | $ 9,356.87 |
| FY 2021 Project Cost - Actual Remaining Engineering Costs (TO #267) LS No. 9 | $ 9,356.87 |
| FY 2021 Project Cost - Actual Construction Cost - (TO #264) Well 15 | $ 76,500.00 |
| FY 2021 Project Cost - Actual Construction Cost - (TO #265) Well 11 | $ 77,500.00 |
| FY 2021 Project Cost - Actual Construction Cost - (TO #267) LS No. 9 | $ 97,000.00 |
| FY 2021 Project Cost - Actual Construction Cost - General Conditions | $ 15,000.00 |
| FY 2022 Project Cost - Actual Construction Cost - (TO #264) Well 15 | $ 50,000.00 |

| | |
|---|---|
| FY 2022 Project Cost - Actual Construction Cost - (TO #265) Well 11 | $ 50,000.00 |
| FY 2022 Project Cost - Actual Construction Cost - (TO #267) LS No. 9 | $ 50,000.00 |
| **Total Project Request/Cost** | **$480,375.00** |

Note: The proposed bid amount submitted by Eau Gallie Electric is lower than the engineer's proposed cost estimate ($657,000) by approximately 37%. The total approved budget for FY 2021 for this project is $846,555; however, staff believes that approximately $266,000.00 will be spent during the FY 2021 fiscal year. This project is expected to roll-over into the next fiscal year (FY 2022) and the remaining funding of $150,00.00 to complete this project is expected to be requested to be approved by the Village council during the upcoming FY 2022 budget process.

The Village will not expend more than the amount within the approved budget as it may be adopted/amended each year for these goods and/or services over the term of this contract.

**ATTACHMENTS:**

Proposed Agreement - Emergency Generator Improvements - Eau Gallie Electric
Invitation to Bid - Emergency Generator Improvements - ITB #2021B-004
Bid Proposal - Emergency Generator Improvments - Eau Gallie Electric
Bid Tabulation Form - Emergency Generator Improvements - ITB #2021B-004
Village Engineer's Recommendation of Award - Emergency Generator Improvements - ITB #2021B-004
Bid Plans - Emergency Generator Improvments - ITB #2021B-004
Bid Specification - Emergency Generator Improvements - ITB #2021B-004
Addendum No. 1 - Time Extension - Emergency Generator Improvements - ITB #2021B-004
Addendum No. 2 - Time Change - Emergency Generator Improvements - ITB #2021B-004
Addendum No. 3 Response to Bidder Questions - Emergency Generator Improvements - ITB #2021B-004
Original CIP Sheet LS9
Original CIP Sheet Well 11
Original CIP Sheet Well 15
Map of Emergency Generator Locations

# AGREEMENT
# BETWEEN OWNER AND CONTRACTOR
# FOR CONSTRUCTION CONTRACT (STIPULATED PRICE)

THIS AGREEMENT is by and between Village of Palm Springs ("Owner") and Eau Gallie Electric ("Contractor").

Owner and Contractor hereby agree as follows:

ARTICLE 1 – WORK

1.01 Contractor shall complete all Work as specified or indicated in the Contract Documents. The Work is generally described as follows:

ARTICLE 2 – THE PROJECT

2.01 The Project, of which the Work under the Contract Documents is a part, is generally described as follows: Emergency Generator Improvements Project.

ARTICLE 3 – ENGINEER

3.01 The part of the Project that pertains to the Work has been designed by Holtz Consulting Engineers, Inc.

3.02 The Owner has retained Holtz Consulting Engineers, Inc. ("Engineer") to act as Owner's representative, assume all duties and responsibilities, and have the rights and authority assigned to Engineer in the Contract Documents in connection with the completion of the Work in accordance with the Contract Documents.

ARTICLE 4 – CONTRACT TIMES

4.01 *Time of the Essence*

A. All time limits for Milestones, if any, Substantial Completion, and completion and readiness for final payment as stated in the Contract Documents are of the essence of the Contract.

4.02 *Contract Times: Days*

A. The Work will be substantially completed within 210 days after the date when the Contract Times commence to run as provided in Paragraph 4.01 of the General Conditions, and completed and ready for final payment in accordance with Paragraph 15.06 of the General Conditions within 240 days after the date when the Contract Times commence to run.

4.03 *Liquidated Damages*

A. Contractor and Owner recognize that time is of the essence as stated in Paragraph 4.01 above and that Owner will suffer financial and other losses if the Work is not completed and Milestones not achieved within the times specified in Paragraph 4.02 above, plus any extensions thereof allowed in accordance with the Contract. The parties also recognize the delays, expense, and difficulties involved in proving in a legal or arbitration proceeding the actual loss suffered by Owner if the Work is not completed on time. Accordingly, instead of

requiring any such proof, Owner and Contractor agree that as liquidated damages for delay (but not as a penalty):

1. Substantial Completion: Contractor shall pay Owner $1,000.00 for each day that expires after the time (as duly adjusted pursuant to the Contract) specified in Paragraph 4.02.A above for Substantial Completion until the Work is substantially complete.
2. Completion of Remaining Work: After Substantial Completion, if Contractor shall neglect, refuse, or fail to complete the remaining Work within the Contract Times (as duly adjusted pursuant to the Contract) for completion and readiness for final payment, Contractor shall pay Owner $500.00 for each day that expires after such time until the Work is completed and ready for final payment.
3. Liquidated damages for failing to timely attain Substantial Completion and final completion are not additive and will not be imposed concurrently.

4.04 *Special Damages*

A. In addition to the amount provided for liquidated damages, Contractor shall reimburse Owner (1) for any fines or penalties imposed on Owner as a direct result of the Contractor's failure to attain Substantial Completion according to the Contract Times.

ARTICLE 5 – CONTRACT PRICE

5.01 Owner shall pay Contractor for completion of the Work in accordance with the Contract Documents the amounts that follow, subject to adjustment under the Contract:

A. For all Unit Price Work, an amount equal to the sum of the extended prices (established for each separately identified item of Unit Price Work by multiplying the unit price times the actual quantity of that item):

| Unit Price Work | | | | | |
|---|---|---|---|---|---|
| Item No. | Description | Unit | Estimated Quantity | Unit Price | Extended Price |
| 1 | General Conditions | Lump Sum | 1 | $15,000.00 | $15,000.00 |
| 2 | Lift Station No. 9 Improvements | Lump Sum | 1 | $147,000.00 | $147,000.00 |
| 3 | Well No. 11 Improvements | Lump Sum | 1 | $127,500.00 | $127,500.00 |
| 4 | Well No. 15 Improvements | Lump Sum | 1 | $126,500.00 | $126,500.00 |
| Total of all Extended Prices for Unit Price Work (subject to final adjustment based on actual quantities) | | | | | $416,000.00 |

The extended prices for Unit Price Work set forth as of the Effective Date of the Contract are based on estimated quantities. As provided in Paragraph 13.03 of the General Conditions, estimated quantities are not guaranteed, and determinations of actual quantities and classifications are to be made by Engineer.

B. Total of Lump Sum Amount and Unit Price Work (subject to final Unit Price adjustment) $416,000.00.

C. For all Work, at the prices stated in Contractor's Bid, attached hereto as an exhibit.

ARTICLE 6 – PAYMENT PROCEDURES

6.01 *Submittal and Processing of Payments*

A. Contractor shall submit Applications for Payment in accordance with Article 15 of the General Conditions. Applications for Payment will be processed by Engineer as provided in the General Conditions.

6.02 *Progress Payments; Retainage*

A. Owner shall make progress payments on account of the Contract Price on the basis of Contractor's Applications for Payment on or about the 20th day of each month during performance of the Work as provided in Paragraph 6.02.A.1 below, provided that such Applications for Payment have been submitted in a timely manner and otherwise meet the requirements of the Contract. All such payments will be measured by the Schedule of Values established as provided in the General Conditions (and in the case of Unit Price Work based on the number of units completed) or, in the event there is no Schedule of Values, as provided elsewhere in the Contract.

1. Prior to Substantial Completion, progress payments will be made in accordance with Florida Statute 255.078 but, in each case, less the aggregate of payments previously made and less such amounts as Owner may withhold, including but not limited to liquidated damages, in accordance with the Contract

B. Upon Substantial Completion, Owner shall pay an amount sufficient to increase total payments to Contractor to 100 percent of the Work completed, less such amounts set off by Owner pursuant to Paragraph 15.01.E of the General Conditions, and less 200 percent of Engineer's estimate of the value of Work to be completed or corrected as shown on the punch list of items to be completed or corrected prior to final payment.

6.03 *Final Payment*

A. Upon final completion and acceptance of the Work in accordance with Paragraph 15.06 of the General Conditions, Owner shall pay the remainder of the Contract Price as recommended by Engineer as provided in said Paragraph 15.06.

ARTICLE 7 – INTEREST

7.01 All amounts not paid when due shall bear interest at the rate of 1 percent per annum.

ARTICLE 8 – CONTRACTOR'S REPRESENTATIONS

8.01 In order to induce Owner to enter into this Contract, Contractor makes the following representations:

A. Contractor has examined and carefully studied the Contract Documents, and any data and reference items identified in the Contract Documents.

B. Contractor has visited the Site, conducted a thorough, alert visual examination of the Site and adjacent areas, and become familiar with and is satisfied as to the general, local, and Site conditions that may affect cost, progress, and performance of the Work.

C. Contractor is familiar with and is satisfied as to all Laws and Regulations that may affect cost, progress, and performance of the Work.

D. Contractor has carefully studied all: (1) reports of explorations and tests of subsurface conditions at or adjacent to the Site and all drawings of physical conditions relating to existing surface or subsurface structures at the Site that have been identified in the Supplementary Conditions, especially with respect to Technical Data in such reports and drawings, and (2) reports and drawings relating to Hazardous Environmental Conditions, if any, at or adjacent to the Site that have been identified in the Supplementary Conditions, especially with respect to Technical Data in such reports and drawings.

E. Contractor has considered the information known to Contractor itself; information commonly known to contractors doing business in the locality of the Site; information and observations obtained from visits to the Site; the Contract Documents; and the Site-related reports and drawings identified in the Contract Documents, with respect to the effect of such information, observations, and documents on (1) the cost, progress, and performance of the Work; (2) the means, methods, techniques, sequences, and procedures of construction to be employed by Contractor; and (3) Contractor's safety precautions and programs.

F. Based on the information and observations referred to in the preceding paragraph, Contractor agrees that no further examinations, investigations, explorations, tests, studies, or data are necessary for the performance of the Work at the Contract Price, within the Contract Times, and in accordance with the other terms and conditions of the Contract.

G. Contractor is aware of the general nature of work to be performed by Owner and others at the Site that relates to the Work as indicated in the Contract Documents.

H. Contractor has given Engineer written notice of all conflicts, errors, ambiguities, or discrepancies that Contractor has discovered in the Contract Documents, and the written resolution thereof by Engineer is acceptable to Contractor.

I. The Contract Documents are generally sufficient to indicate and convey understanding of all terms and conditions for performance and furnishing of the Work.

J. Contractor's entry into this Contract constitutes an incontrovertible representation by Contractor that without exception all prices in the Agreement are premised upon performing and furnishing the Work required by the Contract Documents.

## ARTICLE 9 – CONTRACT DOCUMENTS

### 9.01 *Contents*

A. The Contract Documents consist of the following:

1. This Agreement (pages 1 to ___, inclusive).
2. Performance bond (pages ___ to ___, inclusive).
3. Payment bond (pages ___ to ___, inclusive).
4. Other bonds.
    a. ___ (pages ___ to ___, inclusive).
    b. ___ (pages ___ to ___, inclusive).
    c. ___ (pages ___ to ___, inclusive).
5. General Conditions (pages ___ to ___, inclusive).

6. Supplementary Conditions (pages ___ to ___, inclusive).
7. Specifications as listed in the table of contents of the Project Manual.
8. Drawings (not attached but incorporated by reference) consisting of ___ sheets with each sheet bearing the following general title: ___ [or] the Drawings listed on the attached sheet index.
9. Addenda (numbers ___ to ___, inclusive).
10. Exhibits to this Agreement (enumerated as follows):
    a. Contractor's Bid (pages ___ to ___, inclusive).
11. The following which may be delivered or issued on or after the Effective Date of the Contract and are not attached hereto:
    a. Notice to Proceed.
    b. Work Change Directives.
    c. Change Orders.
    d. Field Orders.

B. The documents listed in Paragraph 9.01.A are attached to this Agreement (except as expressly noted otherwise above).

C. There are no Contract Documents other than those listed above in this Article 9.

D. The Contract Documents may only be amended, modified, or supplemented as provided in the General Conditions.

E. To the extent that there exists a conflict between this Agreement and the remaining Contract Documents, the terms, conditions, covenants, and/or provisions of this Agreement shall prevail. Wherever possible, the provisions of such documents shall be construed in such a manner as to avoid conflicts between provisions of the various documents.

## ARTICLE 10 – MISCELLANEOUS

10.01 *Terms*

A. Terms used in this Agreement will have the meanings stated in the General Conditions and the Supplementary Conditions.

10.02 *Assignment of Contract*

A. Unless expressly agreed to elsewhere in the Contract, no assignment by a party hereto of any rights under or interests in the Contract will be binding on another party hereto without the written consent of the party sought to be bound; and, specifically but without limitation, money that may become due and money that is due may not be assigned without such consent (except to the extent that the effect of this restriction may be limited by law), and unless specifically stated to the contrary in any written consent to an assignment, no assignment will release or discharge the assignor from any duty or responsibility under the Contract Documents.

10.03 *Successors and Assigns*

A. Owner and Contractor each binds itself, its successors, assigns, and legal representatives to the other party hereto, its successors, assigns, and legal representatives in respect to all covenants, agreements, and obligations contained in the Contract Documents.

10.04 *Severability*

A. Any provision or part of the Contract Documents held to be void or unenforceable under any Law or Regulation shall be deemed stricken, and all remaining provisions shall continue to be valid and binding upon Owner and Contractor, who agree that the Contract Documents shall be reformed to replace such stricken provision or part thereof with a valid and enforceable provision that comes as close as possible to expressing the intention of the stricken provision.

10.05 *Contractor's Certifications*

A. Contractor certifies that it has not engaged in corrupt, fraudulent, collusive, or coercive practices in competing for or in executing the Contract. For the purposes of this Paragraph 10.05:

1. "corrupt practice" means the offering, giving, receiving, or soliciting of any thing of value likely to influence the action of a public official in the bidding process or in the Contract execution;

2. "fraudulent practice" means an intentional misrepresentation of facts made (a) to influence the bidding process or the execution of the Contract to the detriment of Owner, (b) to establish Bid or Contract prices at artificial non-competitive levels, or (c) to deprive Owner of the benefits of free and open competition;

3. "collusive practice" means a scheme or arrangement between two or more Bidders, with or without the knowledge of Owner, a purpose of which is to establish Bid prices at artificial, non-competitive levels; and

4. "coercive practice" means harming or threatening to harm, directly or indirectly, persons or their property to influence their participation in the bidding process or affect the execution of the Contract.

10.06 *Indemnity*

A. The parties recognize that the CONTRACTOR is an independent contractor. The CONTRACTOR agrees to assume liability for and indemnify, hold harmless, and defend the VILLAGE, its council members, mayor, officers, employees, agents, and attorneys of, from, and against all liability and expense, including reasonable attorney's fees, in connection with any and all claims, demands, damages, actions, causes of action, and suits in equity of whatever kind or nature, including claims for personal injury, property damage, equitable relief, or loss of use, to the extent caused by the negligence, recklessness, or intentionally wrongful conduct of the CONTRACTOR, its agents, officers, Contractors, subcontractors, employees, or anyone else utilized by the CONTRACTOR in the performance of this Contract. The CONTRACTOR's liability hereunder shall include all attorney's fees and costs incurred by the VILLAGE in the enforcement of this indemnification provision. This includes claims made by the employees of the CONTRACTOR against the VILLAGE and the CONTRACTOR hereby waives its entitlement, if any, to immunity under Section 440.11, Florida Statutes. The obligations contained in this provision shall survive termination of this Contract and shall not be limited by the amount of any insurance required to be obtained or maintained under this Contract.

B. Subject to the limitations set forth in this Section, CONTRACTOR shall assume control of the defense of any claim asserted by a third party against the VILLAGE and, in connection with such defense, shall appoint lead counsel, in each case at the CONTRACTOR's expense. The VILLAGE shall have the right, at its option, to participate in the defense of any third party claim, without relieving CONTRACTOR of any of its obligations hereunder. If the CONTRACTOR assumes control of the defense of any third party claim in accordance with this paragraph, the CONTRACTOR shall obtain the prior written consent of the VILLAGE before entering into any settlement of such claim. Notwithstanding anything to the contrary in this Section, the CONTRACTOR shall not assume or maintain control of the defense of any third party claim, but shall pay the fees of counsel retained by the VILLAGE and all expenses, including experts' fees, if (i) an adverse determination with respect to the third party claim would, in the good faith judgment of the VILLAGE, be detrimental in any material respect to the VILLAGE's reputation; (ii) the third party claim seeks an injunction or equitable relief against the VILLAGE; or (iii) the CONTRACTOR has failed or is failing to prosecute or defend vigorously the third party claim. Each party shall cooperate, and cause its agents to cooperate, in the defense or prosecution of any third party claim and shall furnish or cause to be furnished such records and information, and attend such conferences, discovery proceedings, hearings, trials, or appeals, as may be reasonably requested in connection therewith.

C. It is the specific intent of the parties hereto that the foregoing indemnification complies with Section 725.06, Florida Statutes, as amended. CONTRACTOR expressly agrees that it will not claim, and waives any claim, that this indemnification violates Section 725.06, Florida Statues. Nothing contained in the foregoing indemnification shall be construed as a waiver of any immunity or limitation of liability the VILLAGE may have under the doctrine of sovereign immunity or Section 768.28, Florida Statutes.

10.07 *Governing Law and Remedies*

A. The validity of this Agreement and of any of its terms or provisions, as well as the rights and duties of the parties hereunder, shall be governed by the laws of the State of Florida and venue for any and all disputes related to or arising from this Agreement shall be in Palm Beach County, Florida.

B. No remedy herein conferred upon any party is intended to be exclusive of any other remedy, and each and every such remedy shall be cumulative and shall be in addition to every other remedy given hereunder or now or hereafter existing at law or in equity or by statute or otherwise. No single or partial exercise by any party of any right, power, or remedy hereunder shall preclude any other or further exercise thereof.

10.08 *Office of the Inspector General*

A. Palm Beach County has established the Office of the Inspector General, which is authorized and empowered to review past, present, and proposed County programs, contracts, transactions, accounts and records. The Inspector General (IG) has the power to subpoena witnesses, administer oaths, require the production of records, and monitor existing projects and programs. The Inspector General may, on a random basis, perform audits on all Village contracts.

10.09 *Scrutinized Companies*

A. Company certifies that it and its subcontractors are not on the Scrutinized Companies that Boycott Israel List and are not engaged in the boycott of Israel. Pursuant to section 287.135, Florida Statutes, the Village may immediately terminate this Agreement at its sole option if the Company or any of its subcontractors are found to have submitted a false

certification; or if the Company or any of its subcontractors, are placed on the Scrutinized Companies that Boycott Israel List or is engaged in the boycott of Israel during the term of this Agreement.

B. The Company agrees to observe the above requirements for applicable subcontracts entered into for the performance of work under this Agreement. The Company agrees that the certifications in this section shall be effective and relied upon by the Village for the term of this Agreement, including any and all renewals. The Company agrees that if it or any of its subcontractors' status changes in regards to any certification herein, the Company shall immediately notify the Village of the same. As provided in Subsection 287.135(8), Florida Statutes, if federal law ceases to authorize the above-stated contracting prohibitions then they shall become inoperative.

10.10 *Public Records*

A. The CONTRACTOR shall comply with Florida's Public Records Act, Chapter 119, Florida Statutes, and, if determined to be acting on behalf of the Village as provided under section 119.011(2), Florida Statutes, specifically agrees to:

1. Keep and maintain public records required by the Village to perform the service.

2. Upon request from the Village's custodian of public records or designee, provide the Village with a copy of the requested records or allow the records to be inspected or copied within a reasonable time at a cost that does not exceed the cost provided in Chapter 119, Florida Statutes, or as otherwise provided by law.

3. Ensure that public records that are exempt or confidential and exempt from public records disclosure requirements are not disclosed except as authorized by law for the duration of this Contract and following completion of this Contract if the Contractor does not transfer the records to the Village.

4. Upon completion of this Contract, transfer, at no cost, to the Village all public records in possession of the Contractor or keep and maintain public records required by the Village to perform the service. If the Contractor transfers all public records to the Village upon completion of the Contract, the Contractor shall destroy any duplicate public records that are exempt or confidential and exempt from public records disclosure requirements. If the Contractor keeps and maintains public records upon completion of the Contract, the Contractor shall meet all applicable requirements for retaining public records. All records stored electronically must be provided to the Village, upon request from the Village's custodian of public records or designee, in a format that is compatible with the information technology systems of the Village.

IF THE CONTRACTOR HAS QUESTIONS REGARDING THE APPLICATION OF CHAPTER 119, FLORIDA STATUTES, TO THE CONSULTANT'S DUTY TO PROVIDE PUBLIC RECORDS RELATING TO THIS CONTRACT, CONTACT THE CUSTODIAN OF PUBLIC RECORDS OR DESIGNEE AT 561-434-5084, kwynn@vpsfl.org, OR BY MAIL AT VILLAGE OF PALM SPRINGS, 226 CYPRESS LANE, PALM SPRINGS, FL 33461.

10.11 *Insurance*

A. The limits of liability for insurance required by Paragraph 6.03 of the General Conditions shall provide coverage for not less that the following amounts or greater where required by Law and Regulations:

1. Workers' Compensation, and related coverages under Paragraphs 6.03.A.1 and A.2 of the General Conditions:

| | | |
|---|---|---|
| a. | State | Statutory |
| b. | Applicable Federal | Statutory |
| c. | Employer Liability: | |
| | Bodily injury, each accident | $1,000,000 |
| | Bodily injury by disease, each employee | $500,000 |
| | Bodily injury/disease aggregate | $1,000,000 |
| d. | Foreign voluntary worker compensation | Statutory |

2. Contractor's Commercial General Liability under Paragraphs 6.03.B and 6.03.C of the General Conditions:

| | | |
|---|---|---|
| a. | General Aggregate | $2,000,000 |
| b. | Products – Completed Operations Aggregate | $2,000,000 |
| c. | Personal and Advertising Injury | $1,000,000 |
| d. | Each Occurrence (Bodily Injury and Property Damage) | $1,000,000 |

3. Automobile Liability under paragraph 6.03.D of the General Conditions:

| | | |
|---|---|---|
| a. | Bodily Injury: | |
| | Each Person | $500,000 |
| | Each Accident | $1,000,000 |
| b. | Property Damage: | |
| | Each Incident | $1,000,000 |

4. Umbrella of Excess Liability under paragraph 6.03.E of the General Conditions:

| | | |
|---|---|---|
| a. | Excess or Umbrella Liability | |
| | 1) General Aggregate | $5,000,000 |
| | 2) Each Occurrence | $1,000,000 |

5. Contractor's Pollution Liability under paragraph 6.03.F of the General Conditions:

| | | |
|---|---|---|
| a. | Contractor's Pollution Liability | |
| | 1) General Aggregate | $2,000,000 |
| | 2) Each Occurrence | $1,000,000 |

6. Additional Insureds include the respective officers, partners, directors, employees, agents, consultants, and subconsultants of the following firms and municipal government(s):

   a. Village of Palm Springs

10.12 *Public Construction Bond*

A. If the contract amount exceeds $200,000 in total construction cost, the CONTRACTOR must provide the VILLAGE with a public construction bond in accordance with section 255.05, Florida Statutes. Said bond must be recorded in the Official Records in and for Palm Beach County and a copy of the recorded bond must be provided to the VILLAGE prior to the CONTRACTOR providing any services under the contract. The VILLAGE reserves the right to

request a bond for any work which is less than $200,000. The cost of the bond shall be a direct pass through cost to the VILLAGE without any mark-up by the CONTRACTOR.

B. The public construction bond shall be on forms attached hereto as Exhibit "B" or substantially similar as approved by the VILLAGE. The bond shall be in an amount not less than the total contract price and shall incorporate by reference the terms of the Contract Documents in their entirety.

C. To be acceptable to the VILLAGE, a Surety Company shall comply with the following provisions:

a. The Surety Company shall have a currently valid Certificate of Authority, issued by the State of Florida Department of Insurance, authorizing it to write surety bonds in the State of Florida.

b. The Surety Company shall have a currently valid Certificate of Authority issued by the United States Department of Treasury under Sections 9304 to 9308 of Title 31 of the United States Code.

c. The Surety Company shall be in full compliance with the provisions of the Florida Insurance Code.

d. The Surety Company shall have at least twice the minimum surplus and capital required by the Florida Insurance Code at the time the contract is approved.

e. The Surety Company shall have at least the ratings of A-/Class V in the latest issue of Best's Key Rating Guide.

f. The Surety Company shall not expose itself to any loss on any one risk in an amount exceeding ten (10) percent of its surplus to policyholders, provided:

1) Any risk or portion of any risk being reinsured shall be deducted in determining the limitation of the risk as prescribed in this section. These minimum requirements shall apply to the reinsuring carrier providing authorization or approval by the State of Florida, Department of Insurance to do business in this state have been met.

2) In the case of the surety insurance company, in addition to the deduction for reinsurance, the amount assumed by any co-surety, the value of any security deposited, pledged or held subject to the consent of the surety and for the protection of the surety shall be deducted.

10.13 *Audit by Village*

A. The CONTRACTOR shall maintain adequate records to justify all charges, expenses, and costs incurred in estimating and performing the Services for at least three (3) years after completion of the Contract. The CONTRACTOR shall permit the VILLAGE, or any authorized representatives of the VILLAGE, at all reasonable times, access to and the right to examine all records, books, papers or documents related to the CONTRACTOR's performance under this Agreement including, but not limited to, expenses for sub-contractors, agents or assistants, direct and indirect charges for work performed and detailed documentation for all such work performed or to be performed under this Agreement.

10.14 *Copies of Data/Documents*

A. Copies or original documents prepared by the CONTRACTOR in relation to work associated with this Agreement shall be provided to the VILLAGE. Data collected, stored, and/or provided shall be in a form acceptable to the VILLAGE and agreed upon by the VILLAGE.

10.15 *Ownership*

A. Each and every report, draft, work product, map, record, and other document reproduced, prepared, or caused to be prepared by the CONTRACTOR pursuant to or in connection with this Agreement shall be the exclusive property of the VILLAGE.

10.16 *Limitations of Liability*

A. Under no circumstances shall either party be liable to the other for any consequential, incidental, special, punitive, or any other form of indirect or non-compensatory damages.

10.17 *Enforcement Costs*

A. All parties shall be responsible for their own attorneys' fees, court costs and expenses if any legal action or other proceeding is brought for any dispute, disagreement, or issue of construction or interpretation arising hereunder whether relating to the Agreement's execution, validity, the obligations provided therein, or performance of this Agreement, or because of an alleged breach, default or misrepresentation in connection with any provisions of this Agreement.

10.18 *Copyrights and/or Patent Rights*

A. CONTRACTOR warrants that there has been no violation of copyrights and/or patent rights in the manufacturing, producing or selling of the goods, shipped or ordered, as a result of this Agreement and the CONTRACTOR agrees to hold the Village harmless from any and all liability, loss, or expense occasioned by any such violation.

10.19 *Protection of Property*

A. The CONTRACTOR shall at all times guard against damage or loss to the property of the VILLAGE or of other vendors or contractors and shall be held responsible for replacing or repairing any such loss or damage. The VILLAGE may withhold payment or make such deductions as deemed necessary to insure reimbursement or replacement for loss or damage to property through negligence of the successful CONTRACTOR or its agents. The CONTRACTOR shall be responsible to safeguard all of their property such as tools and equipment while on site. The VILLAGE will not be held responsible for any loss of CONTRACTOR property due to theft or vandalism.

10.20 *Damage to Persons or Property*

A. The responsibility for all damage to person or property arising out of or on account of Scope of Work done under this Contract shall rest upon the CONTRACTOR.

10.21 *Discrimination*

A. The CONTRACTOR warrants and represents that all of its employees are treated equally during employment without regard to race, color, religion, disability, sex, age, national origin, ancestry, political affiliation, marital status, handicap, or sexual orientation. Further, CONTRACTOR shall not discriminate or permit discrimination against any employee or an applicant for employment on the basis of race, color, sex, religion, political affiliation, natural origin, ancestry, marital status, sexual orientation or handicap.

10.22 *Construction Defects*

A. PURSUANT TO SECTION 558.005, FLORIDA STATUTES, ANY CLAIMS FOR CONSTRUCTION DEFECTS ARE NOT SUBJECT TO THE NOTICE AND CURE PROVISIONS OF CHAPTER 558, FLORIDA STATUTES.

10.23 *Public Entity Crimes*

A. Contractor acknowledges and agrees that a person or affiliate who has been placed on the convicted vendor list following a conviction for a public entity crime may not submit a bid, proposal, or reply on a contract to provide any goods or services to a public entity; may not submit a bid, proposal, or reply on a contract with a public entity for the construction or repair of a public building or public work; may not submit bids, proposals, or replies on leases of real property to a public entity; may not be awarded or perform work as a contractor, supplier or sub-contractor under a contract with any public entity; and may not transact business with any public entity in excess of the threshold amount provided in Section 287.017, Florida Statues, for CATEGORY TWO for a period of 36 months following the date of being placed on the convicted vendor list. The Contractor will advise the Village immediately if it becomes aware of any violation of this statute.

10.24 *Scrutinized Companies*

A. Contractor certifies that it and its subcontractors are not on the Scrutinized Companies that Boycott Israel List and are not engaged in the boycott of Israel. Pursuant to section 287.135, Florida Statutes, the City may immediately terminate this Agreement at its sole option if the Contractor or any of its subcontractors are found to have submitted a false certification; or if the Contractor or any of its subcontractors, are placed on the Scrutinized Companies that Boycott Israel List or is engaged in the boycott of Israel during the term of this Agreement.

B. If this Agreement is for one million dollars or more, the Contractor certifies that it and its subcontractors are also not on the Scrutinized Companies with Activities in Sudan List, Scrutinized Companies with Activities in the Iran Petroleum Energy Sector List, or engaged in business operations in Cuba or Syria as identified in Section 287.135, Florida Statutes. Pursuant to Section 287.135, the City may immediately terminate this Agreement at its sole option if the Contractor, or any of its subcontractors are found to have submitted a false certification; or if the Contractor or any of its subcontractors are placed on the Scrutinized Companies with Activities in Sudan List, or Scrutinized Companies with Activities in the Iran Petroleum Energy Sector List, or are or have been engaged with business operations in Cuba or Syria during the term of this Agreement.

C. The Contractor agrees to observe the above requirements for applicable subcontracts entered into for the performance of work under this Agreement.

D. The Contractor agrees that the certifications in this section shall be effective and relied upon by the City for the term of this Agreement, including any and all renewals.

E. The Contractor agrees that if it or any of its subcontractors' status changes in regards to any certification herein, the Contractor shall immediately notify the City of the same.

F. As provided in Subsection 287.135(8), Florida Statutes, if federal law ceases to authorize the above-stated contracting prohibitions then they shall become inoperative.

10.25 *E-Verify*

A. Pursuant to Section 448.095(2), Florida Statutes, beginning on January 1, 2021, the CONTRACTOR shall:

1. Register with and use the E-Verify system to verify the work authorization status of all newly hired employees and require all Subcontractors (providing services or receiving funding under this Agreement) to register with and use the E-Verify system to verify the work authorization status of all the Subcontractors' newly hired employees;

2. Secure an affidavit from all Subcontractors (providing services or receiving funding under this Agreement) stating that the Subcontractor does not employ, contract with,

or subcontract with an "unauthorized alien" as defined in Section 448.095(1)(k), Florida Statutes;

3. Maintain copies of all Subcontractor affidavits for the duration of this Agreement and provide the same to the Owner upon request;
4. Comply fully, and ensure all of its Subcontractors comply fully, with Section 448.095, Florida Statutes;
5. Be aware that a violation of Section 448.09, Florida Statutes (Unauthorized aliens; employment prohibited) shall be grounds for termination of this Agreement; and,
6. Be aware that if the Owner terminates this Agreement under Section 448.095(2)(c), Florida Statutes, the Contractor may not be awarded a contract for at least 1 year after the date on which the Agreement is terminated and will be liable for any additional costs incurred by the Village as a result of the termination of the Agreement.

**REMAINDER OF THIS PAGE INTENTIONALLY LEFT BLANK**

**SIGNATURE PAGE TO FOLLOW**

IN WITNESS WHEREOF, Owner and Contractor have signed this Agreement.

This Agreement will be effective on _____ (which is the Effective Date of the Contract).

| VILLAGE: | | CONTRACTOR: | |
|---|---|---|---|
| By: | | By: | |
| Title: | Mayor | Title: | |
| | | *(Seal)* | |
| Attest: | | Attest: | |
| Title: | Village Clerk | Title: | Notary Public |

Approved as to Form: _____

Title: Village Attorney

| Address for giving notices: | Address for giving notices: |
|---|---|
| 226 Cypress Lane | |
| Palm Springs FL, 33461 | |
| | |

License No.: _____
*(where applicable)*

**VILLAGE OF PALM SPRINGS**
**PALM SPRINGS, FL**
**ITB NO. 2021B-004**
**EMERGENCY GENERATOR IMPROVEMENTS**

ADVERTISEMENT FOR BIDS

Sealed Bids for the construction of the **Emergency Generator Improvements** Project will be received, by the **Village of Palm Springs**, at the office of the **Palm Springs Village Clerk**, until **2:00 PM** local time on **February 18, 2021**, at which time the Bids received will be publicly opened and read. The Project consists of constructing emergency generators, automatic transfer switches, and all other appurtenances necessary for a complete installation at Lift Station No. 9, Well No. 11, and Well No. 15.

Bidding Documents may be viewed and downloaded online www.vpsfl.org or www.demandstar.org. Hard copies of bidding Documents may be obtained from Holtz Consulting Engineers, Inc. on Mondays through Fridays between the hours of 8:00 AM and 5:00 PM. Bidding Documents are available on compact disc (as portable document format (PDF) files) for a non-refundable charge of $ 25.00 , including shipping via overnight express service. Alternatively, printed Bidding Documents may be obtained from Holtz Consulting Engineers, Inc. either via in-person pick-up or via mail, upon receipt of payment for the Bidding Documents. The non-refundable cost of printed Bidding Documents is $80.00 per set, payable to "Holtz Consulting Engineers, Inc.".

A virtual pre-bid conference will be held at **2:00 PM** local time on **January 27, 2021** via GoToMeeting. Attendance at the pre-bid conference **is not** mandatory.

Bid security shall be furnished in accordance with the Instructions to Bidders.

Any questions regarding the specifications and Solicitation process must be submitted in writing to the Village Clerk at kwynn@vpsfl.org, Questions and requests for clarification and additional information must be received prior to the Deadline for Submission of Questions on **February 5, 2021** AT 5:00 PM local time.

Pursuant to Section 2-355 of Palm Beach County Ordinance No. 2011-039, and the purchasing policies of the Village of Palm Springs, all Solicitations, once advertised, are under the "Cone of Silence" until the appropriate authority has approved an award recommendation, rejected all responses or some other action by the Village to end the selection process. This limits and requires documentation of communications between potential Bidders and/or Bidders on Village Solicitations, the Village's professional staff, and the Village Council members.

| | |
|---|---|
| Owner: | **Village of Palm Springs** |
| By: | **Kimberly Wynn** |
| Title: | **Village Clerk** |
| Date: | **January 21, 2021** |
| Publication: | Lake Worth Herald, Demandstar, and Village of Palm Springs website |

+ + END OF ADVERTISEMENT FOR BIDS + +

Original

# Bid Package For:

# VILLAGE OF PALM SPRINGS
## Bid #2021B-004
## EMERGENCY GENERATOR IMPROVEMENTS AT LS#9, WELL #11, WELL #15

## Bid Opens: 3-18-21 @ 2:00 PM EST

2012 Aurora Road | Melbourne, FL 32935
T (321) 259-2885 | F (321)254-1518 | 1-877-434-5577
EG-Electric.com

SECTION 00400

BID SUBMISSION CHECKLIST

Project Name: Emergency Generator Improvements

Bid Number: 2021B-004

Bidders Name: Eau Gallie Electric

The following items must be submitted in the following order with your bid:

1. ✓ Completed Section 00400 - Bid Submission Checklist
2. ✓ Completed Section 00410 - Bid Form + Addendum 1
3. ✓ Completed Section 00430 - Bid Bond, complete with Power of Attorney
4. ✓ Completed Section 00431 - Tabulation of Subcontractor and Suppliers
5. ✓ Completed Section 00440 - Florida Trench Safety Act Certification
6. ✓ Completed Section 00451 - Qualifications Statement
7. ✓ Completed Section 00452 - Bidder's Statement of Disputes, Litigation, Arbitration, and Surety Completion
8. ✓ Completed Section 00453 - Non-Collusive Affidavit
9. ✓ Completed Section 00454 - Drug-Free Workplace Certificate
10. ✓ Completed Section 00455 - Sworn Statement on Public Entity Crimes
11. ✓ Completed Section 00456 – Scrutinized Companies
12. ✓ Current Insurance Certificate showing that bidder can meet the insurance requirements per Section 10.10 of the Contract Agreement, Section 6.03 of the General Conditions.
13. ✓ List of Licenses held, Company Profile

Submit one (1) original and two (2) copies of all documents listed above. Original shall be clearly marked "Original".

Failure to provide the above listed items may result in your bid being deemed non-responsive.

# BID FORM

## ARTICLE 1 – BID RECIPIENT

1.01 This Bid is submitted to:

***VILLAGE OF PALM SPRINGS***

***C/O Kimberly Wynn, Village Clerk***

***226 Cypress Lane, Palm Springs, FL 33461***

1.02 The undersigned Bidder proposes and agrees, if this Bid is accepted, to enter into an Agreement with Owner in the form included in the Bidding Documents to perform all Work as specified or indicated in the Bidding Documents for the prices and within the times indicated in this Bid and in accordance with the other terms and conditions of the Bidding Documents.

## ARTICLE 2 – BIDDER'S ACKNOWLEDGEMENTS

2.01 Bidder accepts all of the terms and conditions of the Instructions to Bidders, including without limitation those dealing with the disposition of Bid security. This Bid will remain subject to acceptance for 120 days after the Bid opening, or for such longer period of time that Bidder may agree to in writing upon request of Owner.

## ARTICLE 3 – BIDDER'S REPRESENTATIONS

3.01 In submitting this Bid, Bidder represents that:

A. Bidder has examined and carefully studied the Bidding Documents, and any data and reference items identified in the Bidding Documents, and hereby acknowledges receipt of the following Addenda:

| Addendum No. | Addendum, Date |
|---|---|
| 1 | 2-1-21 |
| | |
| | |
| | |

B. Bidder has visited the Site, conducted a thorough, alert visual examination of the Site and adjacent areas, and become familiar with and satisfied itself as to the general, local, and Site conditions that may affect cost, progress, and performance of the Work.

C. Bidder is familiar with and has satisfied itself as to all Laws and Regulations that may affect cost, progress, and performance of the Work.

D. Bidder has considered the information known to Bidder itself; information commonly known to contractors doing business in the locality of the Site; information and observations obtained from visits to the Site; the Bidding Documents; and any Site-related reports and drawings identified in the Bidding Documents, with respect to the effect of such information, observations, and documents on (1) the cost, progress, and performance of the Work; (2) the means, methods, techniques, sequences, and procedures of construction to be employed by Bidder; and (3) Bidder's safety precautions and programs.

E. Bidder agrees, based on the information and observations referred to in the preceding paragraph, that no further examinations, investigations, explorations, tests, studies, or data are necessary for the determination of this Bid for performance of the Work at the price bid and within the times required, and in accordance with the other terms and conditions of the Bidding Documents.

F. Bidder is aware of the general nature of work to be performed by Owner and others at the Site that relates to the Work as indicated in the Bidding Documents.

G. Bidder has given Engineer written notice of all conflicts, errors, ambiguities, or discrepancies that Bidder has discovered in the Bidding Documents, and confirms that the written resolution thereof by Engineer is acceptable to Bidder.

H. The Bidding Documents are generally sufficient to indicate and convey understanding of all terms and conditions for the performance and furnishing of the Work.

I. The submission of this Bid constitutes an incontrovertible representation by Bidder that Bidder has complied with every requirement of this Article, and that without exception the Bid and all prices in the Bid are premised upon performing and furnishing the Work required by the Bidding Documents.

**ARTICLE 4 – BIDDER'S CERTIFICATION**

4.01 Bidder certifies that:

A. This Bid is genuine and not made in the interest of or on behalf of any undisclosed individual or entity and is not submitted in conformity with any collusive agreement or rules of any group, association, organization, or corporation;

B. Bidder has not directly or indirectly induced or solicited any other Bidder to submit a false or sham Bid;

C. Bidder has not solicited or induced any individual or entity to refrain from bidding; and

D. Bidder has not engaged in corrupt, fraudulent, collusive, or coercive practices in competing for the Contract. For the purposes of this Paragraph 4.01.D:

1. "corrupt practice" means the offering, giving, receiving, or soliciting of any thing of value likely to influence the action of a public official in the bidding process;

2. "fraudulent practice" means an intentional misrepresentation of facts made (a) to influence the bidding process to the detriment of Owner, (b) to establish bid prices at artificial non-competitive levels, or (c) to deprive Owner of the benefits of free and open competition;

3. "collusive practice" means a scheme or arrangement between two or more Bidders, with or without the knowledge of Owner, a purpose of which is to establish bid prices at artificial, non-competitive levels; and

4. "coercive practice" means harming or threatening to harm, directly or indirectly, persons or their property to influence their participation in the bidding process or affect the e execution of the Contract.

**ARTICLE 5 – BASIS OF BID**

5.01 Bidder will complete the Work in accordance with the Contract Documents for the following price(s):

**UNIT PRICE BID**

| Item No. | Description | Unit | Estimated Quantity | Bid Unit Price | Bid Price |
|---|---|---|---|---|---|
| 1 | General Conditions | Lump Sum | 1 | $15,000.00 | $15,000.00 |
| 2 | Lift Station No. 9 Improvements | Lump Sum | 1 | $147,000.00 | $147,000.00 |
| 3 | Well No. 11 Improvements | Lump Sum | 1 | $127,500.00 | $127,500.00 |
| 4 | Well No. 15 Improvements | Lump Sum | 1 | $126,500.00 | $126,500.00 |
| **Total of All Unit Price Bid Items** | | | | | $ 416,000.00 |

Bidder acknowledges that (1) each Bid Unit Price includes an amount considered by Bidder to be adequate to cover Contractor's overhead and profit for each separately identified item, and (2) estimated quantities are not guaranteed, and are solely for the purpose of comparison of Bids, and final payment for all unit price Bid items will be based on actual quantities, determined as provided in the Contract Documents.

**Total Bid Price (written)** four hundred sixteen thousand and 00/100 dollars

**ARTICLE 6 – TIME OF COMPLETION**

6.01 Bidder agrees that the Work will be substantially complete within 210 calendar days after the date when the Contract Times commence to run as provided in Paragraph 4.01 of the General Conditions, and will be completed and ready for final payment in accordance with Paragraph 15.06 of the General Conditions within 240 calendar days after the date when the Contract Times commence to run.

6.02 Bidder accepts the provisions of the Agreement as to liquidated damages.

**ARTICLE 7 – ATTACHMENTS TO THIS BID**

7.01 The following documents are submitted with and made a condition of this Bid:

A. Required Bid security;

B. List of Proposed Subcontractors;

C. List of Proposed Suppliers;

D. List of Project References;

E. Evidence of authority to do business in the state of the Project; or a written covenant to obtain such license within the time for acceptance of Bids;

F. Contractor's License No.: _____ **[or]** Evidence of Bidder's ability to obtain a State Contractor's License and a covenant by Bidder to obtain said license within the time for acceptance of Bids;

G. Required Bidder Qualification Statement with supporting data; and

**ARTICLE 8 – DEFINED TERMS**

8.01 The terms used in this Bid with initial capital letters have the meanings stated in the Instructions to Bidders, the General Conditions, and the Supplementary Conditions.

**ARTICLE 9 – BID SUBMITTAL**

BIDDER: *[Indicate correct name of bidding entity]*

Eau Gallie Electric

By:
*[Signature]* [signature]

*[Printed name]* Christopher Hughes
*(If Bidder is a corporation, a limited liability company, a partnership, or a joint venture, attach evidence of authority to sign.)*

Attest:
*[Signature]* [signature]

*[Printed name]* Kim A. Lanham

Title: Project Coordinator

Submittal Date: 3-17-21

Address for giving notices:

2012 Aurora Road, Melbourne FL 32935

Telephone Number: 321 259 2885 x 103

Fax Number:

Contact Name and e-mail address: Christopher Hughes
chughes@eg-electric.com

Bidder's License No.: EC13003441, CGC1526728, PE4016
*(where applicable)*

# Village of Palm Springs

PUBLIC SERVICE DEPARTMENT

**EMERGENCY GENERATOR IMPROVEMENTS**
**ITB# 2021B-004**
**Addendum No. 1**
**February 1, 2021**

---

**BIDS DUE: 2:00 PM, Local Time, March 18, 2021**

---

TO ALL VENDORS BIDDING ON THIS PROJECT:

The changes, additions, substitutions, and/or deletions contained in Addendum No. 1 are hereby made a part of the Bid Documents for the **Emergency Generator Improvement Project**, fully and completely as if the same were fully set forth herein.

**IN THE PLANS**

No changes

**IN THE SPECIFICATIONS**

1. Bid due date has changed from 2:00 PM local time on February 18, 2021 to 2:00 PM local time on March 18, 2021.
2. Due date for the Deadline for Submissions of Questions has changed from 5:00 PM local time on February 5, 2021 to 5:00 PM local time on March 5, 2021.

Receipt acknowledged and conditions agreed to the 16 day of March, 2021.

Eau Gallie Electric
Bidder

Christopher Hughes, Pres.
By

END OF ADDENDUM

# Emergency Generator Improvements
# Addendum No. 2
# March 17, 2021

---

***BIDS DUE: 2:00 PM, Local Time, March 25, 2021***

---

TO ALL VENDORS BIDDING ON THIS PROJECT:

The changes, additions, substitutions, and/or deletions contained in Addendum No. 2 are hereby made a part of the Bid Documents for the **Emergency Generator Improvements**, fully and completely as if the same were fully set forth herein.

**IN THE PLANS**

No changes

**IN THE SPECIFICATIONS**

1. Bid due date has changed from 2:00 PM local time on March 18, 2021 to 2:00 PM local time on **March 25, 2021**.

Receipt acknowledged and conditions agreed to the 22 day of March, 2021.

By Bidder
Christopher Hughes, Pres.
Eau Gallie Electric

END OF ADDENDUM

# Emergency Generator Improvements
# Addendum No. 3
# March 22, 2021

---

**BIDS DUE: 2:00 PM, Local Time, March 25, 2021**

---

**TO ALL VENDORS BIDDING ON THIS PROJECT:**

The changes, additions, substitutions, and/or deletions contained in Addendum No. 3 are hereby made a part of the Bid Documents for the **Emergency Generator Improvements**, fully and completely as if the same were fully set forth herein.

**QUESTIONS FROM BIDDERS**

1. **Question:** What I/O signals are requested?

**Answer:** 4 discrete signals including Generator Running, Generator Fault, Generator Low fuel Alert, ATS in Normal Position

2. **Question:** Will other manufacturers besides Tradewinds will be considered for the generator?

**Answer:** Yes. Cummins, CAT, and Generac will be considered as equal.

3. **Question:** The concrete slab on site 9 is to be repainted and the new concrete painted to match. Do you want the other sites #11 and 15 to have the slabs painted?

**Answer:** No, the other sites do not have to have the concrete painted.

4. **Question:** On drawing E-8 the panelboards are all listed as Nema 3 R enclosures. All the other new equipment (CPT, Disconnect and ATS) are to be nema 4 X. Do you want the panelboards to be nema 4X?

**Answer:** Provide either 3R 316SS or 4X 316 SS

5. **Question:** Tradewinds is shown as specified generator manufacturer. Drawings show ATS's mounted on H frame, Tradewinds tends to include the ATS's internally in generator enclosure. Please clarify intent to have them separate from generator or if they can be internal in enclosure will they still need to be 4X316SS?

**Answer:** Provide separate ATS per plans and ATS spec.

6. **Question:** Can Cummins be used as an equal or superior generator supplier if submittals are sent in with the bid?

**Answer:** Yes. Cummins, CAT, and Generac will be considered as equal.

7. **Question:** How long can the control panels be without power before pumps or mobile generators are required?

**Answer:** The control panels can be without permanent FPL power for up to 2 hours. During the 2-hour period, the Owner will provide temporary power via portable generators or temporary bypass pumping. The Contractor will be required to schedule and coordinate with Engineer and Owner.

8. **Question:** Ground rod specs state all to be 20' X 5/8" however detail on E-9 Pipestand shows 10' X 5/8". Please clarify.

**Answer:** Provide 20' long (two 10' with coupler for 20' long 5/8" electrodes).

9. **Question:** Specification section 01400, 1.04, items F & G, I understand the concrete testing (#3), please confirm that the other items listed do not apply to this project.

**Answer:** Density testing and concrete cylinder testing for the concrete slabs is the only testing required under this section.

10. **Question:** Generator specifications, 16203-3, item G. Is this meant for the manufacturer of the generator to include or the contractor to add after receipt. If contractor to supply, please clarify manufacturer and model and where they are to be placed in the unit.

**Answer:** Generator Vendor needs to provide this, if shipped loose they need to instruct electrical contractor where and how to connect this to unit.

11. **Question:** Who is responsible for programing of the RTU I/O inputs?
**Answer:** The Contractor is responsible for landing the I/O wires in the existing RTUs. The Owner will be responsible for the programming.

**12.** **Question:** Will the low bid evaluation be done on a per site basis or cumulatively?

**Answer:** The low bid will be calculated by the cumulative total of all the work at all three sites.

**13.** **Question:** All electrical conduit above ground is acceptable with PVC schedule 80 or is metal conduit required.
**Answer:** Schedule 80 PVC is acceptable.

**14.** **Question:** Is Owner responsible for hiring RTU contractor to tie generators into RTU System or is contractor responsible? If so provide RTU contractor contact.

**Answer:** The Contractor is responsible for landing the I/O wires in the existing RTUs. The Owner will be responsible for the programming.

**15.** **Question:** Per virtual pre-bid meeting it was mentioned that additional generator manufactures would be accepted and not just Tradewinds.

**Answer:** Yes. Cummins, CAT, and Generac will be considered as equal.

**16.** **Question:** Is project FEMA funded? Are there any special payment disclosures?

**Answer:** There are no grant funds or special payment disclosures included in this project.

**17.** **Question:** With major equipment long lead times in excess of 180 days, when will the notice to proceed be issued?

**Answer:** Additional contract time will be added if the Contractor can provide documentation on the long lead time of equipment beyond the Contractor's control.

**IN THE SPECIFICATIONS**

1. Bid due date has changed from 2:00 PM local time on March 18, 2021 to 2:00 PM local time on March 25, 2021.

---

Receipt acknowledged and conditions agreed to the 22 day of March, 2021.

[signature], Pres

By Bidder
Eau Gallie Electric

END OF ADDENDUM

# BID BOND

Any singular reference to Bidder, Surety, Owner or other party shall be considered plural where applicable.

BIDDER *(Name and Address)*:
Eau Gallie Electric, Inc.
2012 Aurora Road
Melbourne, FL 32935

SURETY *(Name, and Address of Principal Place of Business)*:
Old Republic Surety Company
P.O. Box 1635, Milwaukee, WI 53201
Incorporated in: Wisconsin

OWNER *(Name and Address)*:
Village of Palm Springs
226 Cypress Lane
Palm Springs, FL 33461

BID

Bid Due Date: March 18, 2021

Description *(Project Name— Include Location)*: ITB NO. 2021B-004; EMERGENCY GENERATOR IMPROVEMENTS

BOND

Bond Number: N/A Bid Bond

Date: March 4, 2021

Penal sum Five Percent of the Total Amount Bid (Words) $ (--5%--) (Figures)

Surety and Bidder, intending to be legally bound hereby, subject to the terms set forth below, do each cause this Bid Bond to be duly executed by an authorized officer, agent, or representative.

| **BIDDER** | **SURETY** |
|---|---|
| Eau Gallie Electric, Inc. (Seal) | Old Republic Surety Company (Seal) |
| Bidder's Name and Corporate Seal | Surety's Name and Corporate Seal |
| By: [signature] | By: [signature] |
| Signature | Signature (Attach Power of Attorney) |
| Christopher Hughes | Michele Alban |
| Print Name | Print Name |
| President | Attorney-In-Fact |
| Title | Title |
| Attest: [signature] | Attest: [signature] |
| Signature Kim A. Lanham | Signature ; Jill Bennett |
| Title Witness | Title ; Witness |

*Note: Addresses are to be used for giving any required notice.*
*Provide execution by any additional parties, such as joint venturers, if necessary.*

1. Bidder and Surety, jointly and severally, bind themselves, their heirs, executors, administrators, successors, and assigns to pay to Owner upon default of Bidder the penal sum set forth on the face of this Bond. Payment of the penal sum is the extent of Bidder's and Surety's liability. Recovery of such penal sum under the terms of this Bond shall be Owner's sole and exclusive remedy upon default of Bidder.

2. Default of Bidder shall occur upon the failure of Bidder to deliver within the time required by the Bidding Documents (or any extension thereof agreed to in writing by Owner) the executed Agreement required by the Bidding Documents and any performance and payment bonds required by the Bidding Documents.

3. This obligation shall be null and void if:

3.1 Owner accepts Bidder's Bid and Bidder delivers within the time required by the Bidding Documents (or any extension thereof agreed to in writing by Owner) the executed Agreement required by the Bidding Documents and any performance and payment bonds required by the Bidding Documents, or

3.2 All Bids are rejected by Owner, or

3.3 Owner fails to issue a Notice of Award to Bidder within the time specified in the Bidding Documents (or any extension thereof agreed to in writing by Bidder and, if applicable, consented to by Surety when required by Paragraph 5 hereof).

4. Payment under this Bond will be due and payable upon default of Bidder and within 30 calendar days after receipt by Bidder and Surety of written notice of default from Owner, which notice will be given with reasonable promptness, identifying this Bond and the Project and including a statement of the amount due.

5. Surety waives notice of any and all defenses based on or arising out of any time extension to issue Notice of Award agreed to in writing by Owner and Bidder, provided that the total time for issuing Notice of Award including extensions shall not in the aggregate exceed 120 days from the Bid due date without Surety's written consent.

6. No suit or action shall be commenced under this Bond prior to 30 calendar days after the notice of default required in Paragraph 4 above is received by Bidder and Surety and in no case later than one year after the Bid due date.

7. Any suit or action under this Bond shall be commenced only in a court of competent jurisdiction located in the state in which the Project is located.

8. Notices required hereunder shall be in writing and sent to Bidder and Surety at their respective addresses shown on the face of this Bond. Such notices may be sent by personal delivery, commercial courier, or by United States Registered or Certified Mail, return receipt requested, postage pre-paid, and shall be deemed to be effective upon receipt by the party concerned.

9. Surety shall cause to be attached to this Bond a current and effective Power of Attorney evidencing the authority of the officer, agent, or representative who executed this Bond on behalf of Surety to execute, seal, and deliver such Bond and bind the Surety thereby.

10. This Bond is intended to conform to all applicable statutory requirements. Any applicable requirement of any applicable statute that has been omitted from this Bond shall be deemed to be included herein as if set forth at length. If any provision of this Bond conflicts with any applicable statute, then the provision of said statute shall govern and the remainder of this Bond that is not in conflict therewith shall continue in full force and effect.

11. The term "Bid" as used herein includes a Bid, offer, or proposal as applicable.

# FLORIDA DEPARTMENT of FINANCIAL SERVICES

## RIGGS, COUNSELMAN, MICHAELS & DOWNES, INC.

555 FAIRMOUNT AVENUE
BALTIMORE MD 21286

## Agency License Number L069508

Location Number: 210918

Issued On 09/29/2010

Pursuant To Section 626.0428, Florida Statutes, This Agency Location Shall Be In The Active Full-Time Charge Of A Licensed And Appointed Agent Holding The Required Agent Licenses To Transact The Lines Of Insurance Being Handled At This Location.

Pursuant To Subsection 626.172(4), Florida Statutes, Each Agency Location Must Display The License Prominently In A Manner That Makes It Clearly Visible To Any Customer Or Potential Customer Who Enters The Agency Location.

Jeff Atwater
Chief Financial Officer
State of Florida

# FLORIDA DEPARTMENT OF FINANCIAL SERVICES

## *MICHELE F ALBAN*

***License Number : W281883***

**Non Resident Insurance License**

- 0920 - NONRES GEN LINES (PROP & CAS)

**Issue Date**

09/23/2015

NOTICE - This non-resident license is limited to the classes of insurance reflected above and is further limited to ONLY those classes of insurance for which you are licensed in your home state.

**Please Note:** A licensee may only transact insurance with an active appointment by an eligible insurer or employer. If you are acting as a surplus lines agent, public adjuster, or reinsurance intermediary manager/broker, you should have an appointment recorded in your own name on file with the Department. If you are unsure of your license status you should contact the Florida Department of Financial Services immediately. This license will expire if more than 48 months elapse without an appointment for each class of insurance listed. If such expiration occurs, the individual will be required to re-qualify as a first-time applicant. If this license was obtained by passing a licensure examination offered by the Florida Department of Financial Services, the licensee is required to comply with continuing education requirements contained in 626.2815 or 648.385 Florida Statutes. A licensee may track their continuing education requirements completed or needed in their MyProfile account at https://dice.fldfs.com. To validate the accuracy of this license you may review the individual license record under "Licensee Search" on the Florida Department of Financial Services website at http://www.MyFloridaCFO.com/Division/Agent

Jeff Atwater
Chief Financial Officer
State of Florida

# OLD REPUBLIC SURETY COMPANY

## POWER OF ATTORNEY

KNOW ALL MEN BY THESE PRESENTS: That OLD REPUBLIC SURETY COMPANY, a Wisconsin stock insurance corporation, does make, constitute and appoint: ALBERT R. COUNSELMAN, ALBERT H. MICHAELS, MICHELE ALBAN, STEPHEN J. MAINELLO, HOSSAY MATTIN, SEAN P. KIRWAN, MICHELLE L. WILSON of BALTIMORE, MD

its true and lawful Attorney(s)-in-Fact, with full power and authority for and on behalf of the company as surety, to execute and deliver and affix the seal of the company thereto (if a seal is required), bonds, undertakings, recognizances or other written obligations in the nature thereof, ***(other than bail bonds, bank depository bonds, mortgage deficiency bonds, mortgage guaranty bonds, guarantees of installment paper and note guaranty bonds, self-insurance workers compensation bonds guaranteeing payment of benefits, asbestos abatement contract bonds, waste management bonds, hazardous waste remediation bonds or black lung bonds),*** as follows:

ALL WRITTEN INSTRUMENTS

and to bind OLD REPUBLIC SURETY COMPANY thereby, and all of the acts of said Attorneys-in-Fact, pursuant to these presents, are ratified and confirmed. This appointment is made under and by authority of the board of directors at a special meeting held on February 18, 1982.

This Power of Attorney is signed and sealed by facsimile under and by the authority of the following resolutions adopted by the board of directors of the OLD REPUBLIC SURETY COMPANY on February 18,1982.

RESOLVED that, the president, any vice-president or assistant vice president, in conjunction with the secretary or any assistant secretary, may appoint attorneys-in-fact or agents with authority as defined or limited in the instrument evidencing the appointment in each case, for and on behalf of the company to execute and deliver and affix the seal of the company to bonds, undertakings, recognizances, and suretyship obligations of all kinds; and said officers may remove any such attorney-in-fact or agent and revoke any Power of Attorney previously granted to such person.

RESOLVED FURTHER, that any bond, undertaking, recognizance, or suretyship obligation shall be valid and binding upon the Company

(i) when signed by the president, any vice president or assistant vice president, and attested and sealed (if a seal be required) by any secretary or assistant secretary; or

(ii) when signed by the president, any vice president or assistant vice president, secretary or assistant secretary, and countersigned and sealed (if a seal be required) by a duly authorized attorney-in-fact or agent; or

(iii) when duly executed and sealed (if a seal be required) by one or more attorneys-in-fact or agents pursuant to and within the limits of the authority evidenced by the Power of Attorney issued by the company to such person or persons.

RESOLVED FURTHER that the signature of any authorized officer and the seal of the company may be affixed by facsimile to any Power of Attorney or certification thereof authorizing the execution and delivery of any bond, undertaking, recognizance, or other suretyship obligations of the company; and such signature and seal when so used shall have the same force and effect as though manually affixed.

IN WITNESS WHEREOF, OLD REPUBLIC SURETY COMPANY has caused these presents to be signed by its proper officer, and its corporate seal to be affixed this 24th day of March, 2020.

OLD REPUBLIC SURETY COMPANY

Karen J. Haffner
Assistant Secretary

OLD REPUBLIC SURETY COMPANY CORPORATE SEAL 1981

Alan Pavlic
President

STATE OF WISCONSIN, COUNTY OF WAUKESHA - SS

On this 24th day of March, 2020, personally came before me, Alan Pavlic and Karen J Haffner, to me known to be the individuals and officers of the OLD REPUBLIC SURETY COMPANY who executed the above instrument, and they each acknowledged the execution of the same, and being by me duly sworn, did severally depose and say: that they are the said officers of the corporation aforesaid, and that the seal affixed to the above instrument is the seal of the corporation, and that said corporate seal and their signatures as such officers were duly affixed and subscribed to the said instrument by the authority of the board of directors of said corporation.

KATHRYN R. PEARSON NOTARY PUBLIC STATE OF WISCONSIN

Kathryn R. Pearson
Notary Public

My Commission Expires: September 28, 2022

**(Expiration of notary's commission does not invalidate this instrument)**

CERTIFICATE

I, the undersigned, assistant secretary of the OLD REPUBLIC SURETY COMPANY, a Wisconsin corporation, CERTIFY that the foregoing and attached Power of Attorney remains in full force and has not been revoked; and furthermore, that the Resolutions of the board of directors set forth in the Power of Attorney, are now in force.

60-7025

OLD REPUBLIC SURETY COMPANY CORPORATE SEAL 1981

Signed and sealed at the City of Brookfield, WI this 24th day of March, 2021.

Karen J. Haffner
Assistant Secretary

ORSC 22262 (3-06)

SECTION 00431
TABULATION OF SUBCONTRACTORS AND SUPPLIERS

The Undersigned states that the following is a full and complete list of the proposed subcontractors and suppliers on this Project and the class of work to be performed by each and that such list will not be added to nor altered without written consent to the Owner through the Engineer.

| | **SUBCONTRACTOR OR SUPPLIER AND ADDRESS** | **CLASS OF WORK OR MATERIAL** |
|---|---|---|
| (1) | Tropic Fencing Pompano Beach, FL | Fencing |
| (2) | Hamilton Concrete Melbourne, FL | Concrete |
| (3) | | |
| (4) | | |
| (5) | | |
| (6) | | |
| (7) | | |

BIDDER: Eau Gallie Electric

By: [signature]

Name: Christopher Hughes

Title: President

Date: 3-16-21

SECTION 00440
FLORIDA TRENCH SAFETY ACT CERTIFICATION

The Bidder acknowledges that included in the various items of the proposal and in the Total Bid Price are costs for complying with the most current version of the Florida Trench Safety Act (90-96, Laws of Florida). The Bidder further identifies the costs to be summarized below:

| | Cost |
|---|---|
| 1. Trench Safety Act Compliance | $ 280.00 |
| 2. Special Shoring | $ |

Identify method of compliance for Item #1: Sloping 80LF x $3.50

Identify or attach a copy of Special Shoring Requirements for Item #2: NA

The undersigned certifies that he/she is the Contractor who will perform the trench excavation for this project and hereby gives written assurance that Contractor will comply with the applicable trench safety standards specifically set forth in Florida's Trench Safety Act (90-96, Laws of Florida).

BIDDER: Eau Gallie Electric

By: [signature]

Name: Christopher Hughes

Title: President

Sworn to and subscribed before me this 16 day of March, 2021.

[signature]
Notary Public

My Commission Expires: 8-30-24

KIM A. LANHAM
COMMISSION
NUMBER
HH 003308
EXPIRES
Aug. 30, 2024
BONDED THRU ARON NOTARY
Notary Public, State of Florida

# QUALIFICATIONS STATEMENT

**THE INFORMATION SUPPLIED IN THIS DOCUMENT IS CONFIDENTIAL TO THE EXTENT PERMITTED BY LAWS AND REGULATIONS**

1. **SUBMITTED BY:**

   Official Name of Firm: Eau Gallie Electric, Inc.

   Address: 2012 Aurora Road
   Melbourne FL 32935

2. **SUBMITTED TO:** Village of Palm Springs

3. **SUBMITTED FOR:** Bid #2021B-004

   Owner: Village of Palm Springs

   Project Name: Emergency Generator Improvements

   **TYPE OF WORK:** Generators, ATSs and all associated items to complete installation at LS#9, Well #11 and Well #15

4. **CONTRACTOR'S CONTACT INFORMATION**

   Contact Person: Christopher Hughes

   Title: President

   Phone: 321 259 2885 x 103

   Email: chughes@eg-electric.com


Copyright © 2013 National Society of Professional Engineers, American Council of Engineering Companies, and American Society of Civil Engineers. All rights reserved.

5. **AFFILIATED COMPANIES:**

Name:

Address:

N A

6. **TYPE OF ORGANIZATION:**

☐ SOLE PROPRIETORSHIP

Name of Owner:

Doing Business As:

Date of Organization:

☐ PARTNERSHIP

Date of Organization:

Type of Partnership:

Name of General Partner(s):

☒ CORPORATION

State of Organization: Florida

Date of Organization: 7-3-86

Executive Officers:

- President: Christopher Hughes
- Vice President(s): —
- Treasurer: —
- Secretary: Christopher Hughes


Copyright © 2013 National Society of Professional Engineers, American Council of Engineering Companies, and American Society of Civil Engineers. All rights reserved.

☐ LIMITED LIABILITY COMPANY

State of Organization: _____

Date of Organization: _____

Members: _____

_____

_____

_____

☐ JOINT VENTURE

Sate of Organization: _____

Date of Organization: _____

Form of Organization: _____

Joint Venture Managing Partner

- Name: N A

- Address: _____

_____

_____

Joint Venture Managing Partner

- Name: _____

- Address: _____

_____

Joint Venture Managing Partner

- Name: _____

- Address: _____

_____


Copyright © 2013 National Society of Professional Engineers, American Council of Engineering Companies, and American Society of Civil Engineers. All rights reserved.

7. **LICENSING**

Jurisdiction: Florida

Type of License: Certified General Contractor

License Number: CGC 1526728

Jurisdiction: Florida

Type of License: Electrical Contractor

License Number: EC 13003441

8. **CERTIFICATIONS**

CERTIFIED BY:

Disadvantage Business Enterprise: _____

Minority Business Enterprise: _____

Woman Owned Enterprise: _____

Small Business Enterprise: _____

Other (Disabled Veteran Owned): State of Florida

9. **BONDING INFORMATION**

Bonding Company: Old Republic Surety Company

Address: 445 S. Moorland Road
Brookfield WI 53005

Bonding Agent: RCM+D

Address: 555 Fairmount Avenue
Baltimore MD 21286

Contact Name: Michele Alban

Phone: 410 427 6428

Aggregate Bonding Capacity: 20M

Available Bonding Capacity as of date of this submittal: 7.5M


Copyright © 2013 National Society of Professional Engineers, American Council of Engineering Companies, and American Society of Civil Engineers. All rights reserved.

## 10. FINANCIAL INFORMATION

Financial Institution: BB+T

Address: 2495 N. Wickham Road
Melbourne FL 32935

Account Manager: Barry Forbes

Phone: 321 253 2388

INCLUDE AS AN ATTACHMENT AN AUDITED BALANCE SHEET FOR EACH OF THE LAST 3 YEARS

## 11. CONSTRUCTION EXPERIENCE:

Current Experience:

List on **Schedule A** all uncompleted projects currently under contract (If Joint Venture list each participant's projects separately).

Previous Experience:

List on **Schedule B** all projects completed within the last 5 Years (If Joint Venture list each participant's projects separately).

Has firm listed in Section 1 ever failed to complete a construction contract awarded to it?

☐ YES ☒ NO

If YES, attach as an Attachment details including Project Owner's contact information.

Has any Corporate Officer, Partner, Joint Venture participant or Proprietor ever failed to complete a construction contract awarded to them in their name or when acting as a principal of another entity?

☐ YES ☒ NO

If YES, attach as an Attachment details including Project Owner's contact information.

Are there any judgments, claims, disputes or litigation pending or outstanding involving the firm listed in Section 1 or any of its officers (or any of its partners if a partnership or any of the individual entities if a joint venture)?

☐ YES ☒ NO

If YES, attach as an Attachment details including Project Owner's contact information.


Copyright © 2013 National Society of Professional Engineers, American Council of Engineering Companies, and American Society of Civil Engineers. All rights reserved.

## 12. SAFETY PROGRAM:

Name of Contractor's Safety Officer: Corey Derfuss

Include the following as attachments:

Provide as an Attachment Contractor's (and Contractor's proposed Subcontractors and Suppliers furnishing or performing Work having a value in excess of 10 percent of the total amount of the Bid) OSHA No. 500- Log & Summary of Occupational Injuries & Illnesses for the past 5 years.

Provide as an Attachment Contractor's (and Contractor's proposed Subcontractors and Suppliers furnishing or performing Work having a value in excess of 10 percent of the total amount of the Bid) list of all OSHA Citations & Notifications of Penalty (monetary or other) received within the last 5 years (indicate disposition as applicable) - IF NONE SO STATE.

Provide as an Attachment Contractor's (and Contractor's proposed Subcontractors and Suppliers furnishing or performing Work having a value in excess of 10 percent of the total amount of the Bid) list of all safety citations or violations under any state all received within the last 5 years (indicate disposition as applicable) - IF NONE SO STATE.

Provide the following for the firm listed in Section V (and for each proposed Subcontractor furnishing or performing Work having a value in excess of 10 percent of the total amount of the Bid) the following (attach additional sheets as necessary):

Workers' compensation Experience Modification Rate (EMR) for the last 5 years:

| | | | |
|---|---|---|---|
| YEAR | 2020 | EMR | .91 |
| YEAR | 2019 | EMR | .94 |
| YEAR | 2018 | EMR | .86 |
| YEAR | 2017 | EMR | .83 |
| YEAR | 2016 | EMR | .80 |

Total Recordable Frequency Rate (TRFR) for the last 5 years:

| | | | |
|---|---|---|---|
| YEAR | _____ | TRFR | _____ |
| YEAR | _____ | TRFR | _____ |
| YEAR | _____ | TRFR | _____ |
| YEAR | _____ | TRFR | _____ |
| YEAR | _____ | TRFR | _____ |


Copyright © 2013 National Society of Professional Engineers, American Council of Engineering Companies, and American Society of Civil Engineers. All rights reserved.

Total number of man-hours worked for the last 5 Years:

| | | | |
|---|---|---|---|
| YEAR | 2020 | TOTAL NUMBER OF MAN-HOURS | 91 670 |
| YEAR | 2019 | TOTAL NUMBER OF MAN-HOURS | 82 194 |
| YEAR | 2018 | TOTAL NUMBER OF MAN-HOURS | 61 744 |
| YEAR | 2017 | TOTAL NUMBER OF MAN-HOURS | 53 485 |
| YEAR | 2016 | TOTAL NUMBER OF MAN-HOURS | 50 295 |

Provide Contractor's (and Contractor's proposed Subcontractors and Suppliers furnishing or performing Work having a value in excess of 10 percent of the total amount of the Bid) Days Away From Work, Days of Restricted Work Activity or Job Transfer (DART) incidence rate for the particular industry or type of Work to be performed by Contractor and each of Contractor's proposed Subcontractors and Suppliers) for the last 5 years:

| | | | |
|---|---|---|---|
| YEAR | _____ | DART | _____ |
| YEAR | _____ | DART | _____ |
| YEAR | _____ | DART | _____ |
| YEAR | _____ | DART | _____ |
| YEAR | _____ | DART | _____ |

**13. EQUIPMENT:**

MAJOR EQUIPMENT:

List on **Schedule C** all pieces of major equipment available for use on Owner's Project.

See attached list


Copyright © 2013 National Society of Professional Engineers, American Council of Engineering Companies, and American Society of Civil Engineers. All rights reserved.

I HEREBY CERTIFY THAT THE INFORMATION SUBMITTED HEREWITH, INCLUDING ANY ATTACHMENTS, IS TRUE TO THE BEST OF MY KNOWLEDGE AND BELIEF.

NAME OF ORGANIZATION: Eau Gallie Electric

BY: [signature]

TITLE: Christopher Hughes, President

DATED: 3-16-21

NOTARY ATTEST:

SUBSCRIBED AND SWORN TO BEFORE ME

THIS 16 DAY OF March, 2021

[signature]

NOTARY PUBLIC - STATE OF Florida

MY COMMISSION EXPIRES: 8-30-24

KIM A. LANHAM COMMISSION NUMBER HH 003308 EXPIRES Aug. 30, 2024 BONDED THRU AARON NOTARY Notary Public, State of Florida

REQUIRED ATTACHMENTS

1. Schedule A (Current Experience).
2. Schedule B (Previous Experience).
3. Schedule C (Major Equipment).
4. Audited balance sheet for each of the last 3 years for firm named in Section 1.
5. Evidence of authority for individuals listed in Section 7 to bind organization to an agreement.
6. Resumes of officers and key individuals (including Safety Officer) of firm named in Section 1.
7. Required safety program submittals listed in Section 13.
8. Additional items as pertinent.


Copyright © 2013 National Society of Professional Engineers, American Council of Engineering Companies, and American Society of Civil Engineers. All rights reserved.

SCHEDULE A

CURRENT EXPERIENCE

| Project Name | Owner's Contact Person | Design Engineer | Contract Date | Type of Work | Status | Cost of Work |
|---|---|---|---|---|---|---|
| Palm Bay WTP Rehabilitation | Name: City of Palm Bay<br>Address: Tim Roberts<br>Telephone: 321 626 1172 | Name: Wade Trim<br>Company:<br>Telephone: | 5-2020 | Rehab w/ 1250kw gen, fuel tank, service pumps | In progress | 2,156,000 |
| Palm Coast 5. pump station Generator Replc. | Name: City Palm Coast<br>Address: Mary Kronenberg<br>Telephone: 386 986 2306 | Name: McKim + Creed<br>Company: Tonya Sonier<br>Telephone: 386-274 2828 | 7-19 | Replace generators @ 5 pump station sites | Close out | 383,900 |
| Naples Switchgear + mcc Replacement @ WTP 2020 Proj. | Name: City of Naples<br>Address: Ben Copeland<br>Telephone: 239 213 4705 | Name: Johnson Engineers<br>Company: Wayne Wright<br>Telephone: 239 461 2446 | 7-2020 | Replace 480v distribution equip, MCCs, Switchgear | In Progress | 2,717,000 |
| Pembroke City Hall Generator Replacement | Name: City Pembroke Pines<br>Address: Dayana Castellon<br>Telephone: 954 518 9064 | Name: Florida Engineer Services<br>Company:<br>Telephone: | 4-2020 | Replace 3 500kw gens and ATS, Controllers | Sub-Stantial completion | 1,208,007 |
| CRU Campus Crusade Generator Replacement | Name: Campus Crusade for Christ<br>Address: mike Rice<br>Telephone: 802 798 2124 | Name: Affiliated Engineers<br>Company:<br>Telephone: | 10-2020 | Replace 3 500kw gens, overhead ss fuel piping | In permit | 364,200 |
| Palm Bay Fire Station 5 Generator Replacement | Name: City Palm Bay<br>Address: Peter Burghardt<br>Telephone: 321 288 0134 | Name: Ring Power<br>Company: Jake Bechtol<br>Telephone: 407 472 6242 | 9-2020 | Install only, 100kw generator, ATS | In Progress | 21,895 |
| Stewart Marchman Health Care Facility Generator Replc. | Name: Stewart Marchman<br>Address: Health Care Facility<br>Telephone: | Name: Ring Power<br>Company: Jake Bechtol<br>Telephone: 407 472 6242 | 7-2020 | Install only, 175 kw generator, ATS | Close out | 56,530 |


Copyright © 2013 National Society of Professional Engineers, American Council of Engineering Companies, and American Society of Civil Engineers. All rights reserved.

SCHEDULE B

PREVIOUS EXPERIENCE (Include ALL Projects Completed within last 5 years)

| Project Name | Owner's Contact Person | Design Engineer | Contract Date | Type of Work | Status | Cost of Work |
|---|---|---|---|---|---|---|
| TBW - Wellfields Generator + Motor Replacement | Name: Tampa Bay Water<br>Address: Richard Menzies<br>Telephone: 813 929 2181 | Name: McKim + Creed<br>Company:<br>Telephone: | 9-2019 | Replace 6 generators + 17 well pumps | Closed 2020 | 2,306,855 |
| City of Cocoa Beach Lift Stations 5 Generator + ATS Replacements | Name: City of Cocoa Beach<br>Address: Brad Kalsow<br>Telephone: 321 868 3308 | Name: EGE<br>Company:<br>Telephone: 321.259-2885 | 7-2019 | Replace 5 generators + ATS @ Lift Stations | Closed 2020 | 463,840 |
| NOAA - Miami 750Kw Generator Replacement | Name: NOAA - AOML<br>Address: Andrew Colegrove<br>Telephone: 305 361 4544 | Name: ADG Engineering<br>Company:<br>Telephone: | 10-2019 | Install 750Kw Gen, 800A ATS, transform | Closed 2020 | 886,365 |
| TBW - MLK Pump Station | Name: Tampa Bay Water<br>Address: Richard Menzies<br>Telephone: 813 929 2181 | Name: TBW<br>Company: (in house)<br>Telephone: | 7-2019 | Replace 4 RVAT's, MCCs @ Pump Station | Closed 2020 | 946,800 |
| City of Holly Hill 100 Kw Generator Replacement | Name: Ring Power Corp<br>Address: Justin Melton<br>Telephone: 904 494 1273 | Name: EGE<br>Company:<br>Telephone: | 4-2020 | Install Only 100 Kw gen, | Closed 2020 | 12,042 |
| Hobe Sound 400Kw Generator Replacement | Name: Martin County<br>Address: Dustin Lindholm<br>Telephone: 772-631-8310 | Name: EGE<br>Company:<br>Telephone: 321 259 2885 | 5-2020 | Installation only of 400Kw gen + ATS. | Closed 2020 | 115,221 |
| Naples Switch-gear + MCC Replacement - 2018 Project | Name: City of Naples<br>Address: Bary Stein<br>Telephone: 239 213 4732 | Name: Johnson Engineering<br>Company: Wayne Wright<br>Telephone: 239 334 0045 | 1-2019 | Replace Switchgear, transformer, MCCs | Closed 2019 | 1,243,500 |


Copyright © 2013 National Society of Professional Engineers, American Council of Engineering Companies, and American Society of Civil Engineers. All rights reserved.

SCHEDULE B

PREVIOUS EXPERIENCE (Include ALL Projects Completed within last 5 years)

| Project Name | Owner's Contact Person | Design Engineer | Contract Date | Type of Work | Status | Cost of Work |
|---|---|---|---|---|---|---|
| Tampa Bay Water Well 49 Generator Replacement | Name: Tampa Bay Water<br>Address: Justin Fox<br>Telephone: 813 929 4565 | Name: TBW<br>Company: (In house)<br>Telephone: | 4-2018 | Install 225Kva transformer, 1250Kw gen w/10,000fuel tank | Closed 2019 | 1,138,300 |
| City of Melbourne WTP - Reverse Osmosis Transformer Replacement | Name: City of Melbourne<br>Address: Jennifer Spagnoli<br>Telephone: 321 608 7100 | Name: Bussen-Mayer Engineering Group<br>Company:<br>Telephone: | 10-2016 | Replaced 2 transformers, new encased duct bank | Closed 2017 | 732,519 |
| Lakemont VA Data Center Generator Replacemt | Name: Dept. Veterans Affairs<br>Address: Scott Reed<br>Telephone: 407 629 1599 | Name: AKEA, Inc.<br>Company:<br>Telephone: | 6-2015 | New 2000A Switchgear, 600Kw gen + fuel tank | Closed 2016 | 750,000 |
| Lake Baldwin VA Medical Center Generator Replcmt. | Name: Dept. Veterans Affairs<br>Address: Scott Reed<br>Telephone: 407 629 1599 | Name: AKEA, Inc<br>Company:<br>Telephone: | 9-2015 | Installed 750 Kw gen, 3000A switch-gear, 2-1600A transfer switches | Closed 2016 | 850,000 |
| FDOH Holsonback-Daytona Beach Generator Replacmt | Name: Florida Dept. Health<br>Address: Crystal Covel<br>Telephone: 386.274.0824 | Name: EGE<br>Company:<br>Telephone: 321 259 2885 | 11-2019 | Install ONLY 750Kw gen, 1200A ATS, fuel tank | Closed 2020 | 19,750 |
| FDOT Orlando Highway Patrol Generator Replacemt | Name: F.D.O.T<br>Address: Dave Clarke<br>Telephone: 386 943 5512 | Name: AGI Engineering<br>Company:<br>Telephone: | 11-2015 | Install 600Kw gen + fuel tank, 2000A Switchgear + switch board | Closed 2016 | 505,222 |
| Pinellas County WWTP UPS Replacement | Name: Pinellas County<br>Address: Becky Cook<br>Telephone: 727 453 3345 | Name: Hahn Engineering<br>Company:<br>Telephone: | 8-2016 | Installed a 750 Kva UPS w/integral flywheel, controls | Closed 2017 | 639,545 |


Copyright © 2013 National Society of Professional Engineers, American Council of Engineering Companies, and American Society of Civil Engineers. All rights reserved.

SCHEDULE C - LIST OF MAJOR EQUIPMENT AVAILABLE

| ITEM | PURCHASE DATE | CONDITION | ACQUIRED VALUE |
|---|---|---|---|
| | | | |
| | | | |
| | | | |
| | | | |
| | | | |
| | | | |
| See List Attached | | | |
| | | | |
| | | | |
| | | | |
| | | | |
| | | | |
| | | | |
| | | | |
| | | | |
| | | | |
| | | | |
| | | | |
| | | | |


Copyright © 2013 National Society of Professional Engineers, American Council of Engineering Companies, and American Society of Civil Engineers. All rights reserved.

# Vehicle & Equipment List
**March 2021**

| | |
|---|---|
| 23 | Service Trucks |
| 6 | Pick-Up Trucks |
| 3 | SUV's |
| 5 | Cars |
| 4 | Scissor Lifts |
| 4 | Fork Lifts |
| 2 | Mini Excavators |
| 2 | Skid Steers |
| 5 | Trailer Mounted Generators |
| 18 | Trailers |
| 3 | Endoscope Cameras |

Also, multiple:
Threaders, Pipe Benders, Wire Pullers, Generators

***Everything listed is owned in full by Eau Gallie Electric***

2012 Aurora Road | Melbourne, FL 32935
T (321) 259-2885 | F (321)254-1518 | 1-877-434-5577
EG-Electric.com

SECTION 00452
BIDDER'S STATEMENT OF DISPUTES, LITIGATION,
ARBITRATION, AND SURETY COMPLETION
LAST THREE (3) YEARS

| PROJECT | NAME AND ADDRESS OF OWNER OR ENGINEER | NAME AND PHONE OF OWNER OR ENGINEER REPRESENTATIVE | DATE OF CONTRACT | AMOUNT | STATUS |
|---|---|---|---|---|---|

N A

(Signed) Chris Prescott

SECTION 00453

NONCOLLUSION AFFIDAVIT

TO: The Village of Palm Springs, herein called the "Owner."

Pursuant to bidding requirements for the work titled "Emergency Generator Improvements, Bid #2021B-004," the enclosed contract documents shall be provided to the Owner.

State of Florida

County of Brevard

Christopher Hughes, being first duly
(Officer's Name)

sworn, deposes, and says that:

A. He/She is President (officer's title) of Eau Gallie Electric, Inc (company name), the Bidder that has submitted the attached bid;

B. He/She is fully informed respecting the preparation and contents of the attached bid and of all pertinent circumstances respecting such bid;

C. Such bid is genuine and is not a collusive or sham bid;

D. Neither the said Bidder nor any of its officers, partners, owners, agents, representatives, employees, or parties in interest, including this affiant, has in any way colluded, conspired, connived, or agreed, directly or indirectly with any other Bidder, firm, or person to submit a collusive or sham bid in connection with the contract for which the attached bid has been submitted or to refrain from bidding in connection with such contract, or has in any manner, directly or indirectly, sought by agreement or collusion or communication or conference with any other Bidder, firm, or person to fix the price or prices in the attached bid or of any other Bidder, or to fix any overhead, profit, or cost element of the bid price or the bid price of any other Bidder, or to secure through any collusion, conspiracy, connivance, or unlawful agreement any advantage against the /
or any person interested in the proposed contract; and

E. The price or prices quoted in the attached bid are fair and proper and are not tainted by any collusion, conspiracy, connivance, or unlawful agreement on the part of the Bidder or any of its agents, representatives, owners, employees, or parties in interest, including this affiant.

(Signed) _____

Christopher Hughes, Pres.

Subscribed and sworn to before me
this 16 day of March, 2021

_____
Notary Public

My commission expires 8-30-24

KIM A. LANHAM
COMMISSION
NUMBER
HH 003303
EXPIRES
Aug. 30, 2024
BONDED THRU AARON NOTARY
Notary Public, State of Florida

SECTION 00454
DRUG-FREE WORKPLACE CERTIFICATE

I, the undersigned, in accordance with Florida Statute 287.087, hereby certify that EAU Gallie Electric (Print or Type Name of Firm)

- Publishes a written statement notifying that the unlawful manufacture, distribution, dispensing, possession, or use of a controlled substance is prohibited in the workplace named above, and specifying actions that will be taken against violations of such prohibition.
- Informs employees about the dangers of drug abuse in the workplace; the firm's policy of maintaining a drug-free working environment and available drug counseling, rehabilitation, and employee assistance programs; and the penalties that may be imposed upon employees for drug-use violations.
- Gives each employee engaged in providing commodities or contractual services that are under bid or proposal a copy of the statement specified above.
- Notifies the employees that as a condition of working on the commodities or contractual services under bid or proposal, the employee will abide by the terms of the statement and will notify the employer of any conviction of or plea of guilty or nolo contendere to any violation of Chapter 1893 or any controlled substance law of the State of Florida or the United States for a violation occurring in the workplace, no later than 5 days after such conviction, and requires employees to sign copies of such written statement to acknowledge their receipt.
- Imposes a sanction on or requires the satisfactory participation in a drug-abuse assistance or rehabilitation program, if such is available in the employee's community, by any employee who is so convicted.
- Makes a good faith effort to continue to maintain a drug-free workplace through the implementation of the drug-free workplace program.

"As a person authorized to sign this statement, I certify that the business, firm, or corporation named above complies fully with the requirements set forth herein."

Authorized Signature

3-16-21
Date Signed

State of: Florida

County of: Brevard

Sworn to and subscribed before me this 16 day of March, 2021

Personally known or Produced Identification Ø
(Specify Type of Identification)

KIM A. LANHAM
COMMISSION NUMBER HH 003308
EXPIRES Aug. 30, 2024
BONDED THRU AARON NOTARY
Notary Public, State of Florida

Signature of Notary

My Commission Expires 8-30-24

SECTION 00455
SWORN STATEMENT UNDER SECTION 287.133(3)(a),
FLORIDA STATUTES, ON PUBLIC ENTITY CRIMES

(To be signed in the presence of a notary public or other officer authorized to administer oaths.)

STATE OF Florida

COUNTY OF Brevard

Before me, the undersigned authority, personally appeared Christoper Hughes, who, being by me first duly sworn, made the following statement:

1. The business address of Eau Gallie Electric (firm name of Bidder/Contractor) is 2012 Aurora Road, Melbourne FL 32935.

2. My relationship to Eau Gallie Electric (firm name of Bidder/Contractor) is President (relationship such as sole proprietor, partner, president, vice president)

3. I understand that a "public entity crime" as defined in Section 287.133 of the Florida Statutes includes a violation of any state or federal law by a person with respect to and directly related to the transaction of business with any public entity in Florida or with an agency or political subdivision of any other state or with the United States, including, but not limited to, any bid or contract for goods or services to be provided to any public entity or such an agency or political subdivision and involving antitrust, fraud, theft, bribery, collusion, racketeering, conspiracy, or material misrepresentation.

4. I understand that "convicted" or "conviction" is defined by the statute to mean a finding of guilt or a conviction of a public entity crime, with or without adjudication of guilt, in any federal or state trial court of record relating to charges brought by indictment or information after July 1, 1989, as a result of a jury verdict, nonjury trial, or entry of a plea of guilty or nolo contendere.

5. I understand that "affiliate" is defined by the statute to mean (1) a predecessor or successor of a person or a corporation convicted of a public entity crime; or (2) an entity under the control of any natural person who is active in the management of the entity and who has been convicted of a public entity crime; or (3) those officers, directors, executives, partners, shareholders, employees, members, and agents who are active in the management of an affiliate; or (4) a person or corporation who knowingly entered into a joint venture with a person who has been convicted of a public entity crime in Florida during the preceding 36 months.

6. Neither the Bidder/Contractor nor any officer, director, executive, partner, shareholder, employee, member or agent who is active in the management of the Bidder/Contractor, nor any affiliate of the Bidder/Contractor, has been convicted of public entity crime subsequent to July 1, 1989.

(Draw a line through Paragraph 6 if Paragraph 7 below applies.)

7. There has been a conviction of a public entity crime by the Bidder/Contractor, or an officer, director, executive, partner, shareholder, employee, member or agent of the Bidder/Contractor who is active in the management of the Bidder/Contractor or an affiliate of the Bidder/Contractor. A determination has been made pursuant to Section 287.133(3) by order of the Division of Administrative Hearings that it is not in the public interest for the name of the convicted person or affiliate to appear on the convicted vendor list. The name of the convicted person or affiliate is NA.

A copy of the order of the Division of Administrative Hearings is attached to this statement.

(Draw a line through Paragraph 7 if Paragraph 6 above applies.)

[signature], President
(Signature)

Sworn to and subscribed to before me in the State and County first mentioned above on the 16 day of March, 2021.

[signature]
Notary Public

KIM A. LANHAM COMMISSION NUMBER HH 003308 EXPIRES Aug. 30, 2024 BONDED THRU AARON NOTARY Notary Public, State of Florida

(affix seal)

8-30-24
My commission expires

SECTION 00456
SCRUTINIZED COMPANIES CERTIFICATION FORM

By execution below, I, Christopher Hughes, on behalf of Eau Gallie Electric (hereinafter, the "Contractor"), hereby swear or affirm to the following certifications:

The following certifications apply to all procurements:

1. The Contractor has reviewed section 215.4725, Florida Statutes, section 215.473, Florida Statutes and section 287.135, Florida Statutes, and understands the same.
2. The Contractor is not on the Scrutinized Companies that Boycott Israel List nor is the Contractor engaged in a boycott of Israel.
3. If awarded a contract, the Contractor agrees to require these certifications for applicable subcontracts entered into for the performance of work/services under this procurement.
4. If awarded a contract, the Contractor agrees that the certifications in this section shall be effective and relied upon by the City for the entire term of the contract, including any and all renewals.

If the contract awarded hereunder is for one million dollars or more, the following additional certifications apply:

1. The Contractor is not on the Scrutinized Companies with Activities in Sudan List.
2. The Contractor is not on the Scrutinized Companies with Activities in the Iran Petroleum Energy Sector List.
3. The Contractor is not engaged in business operations in Cuba or Syria.
5. If awarded a contract, the Contractor agrees to require these certifications for applicable subcontracts entered into for the performance of work/services under this procurement.
6. If awarded a contract, the Contractor agrees that the certifications in this section shall be effective and relied upon by the City for the entire term of the contract, including any and all renewals.

**CONTRACTOR:** Eau Gallie Electric
By: [signature]
Name: Christopher Hughes
Title: President
Date: 3-16-21

STATE OF FLORIDA
COUNTY OF Brevard

The foregoing instrument was sworn to (or affirmed) and subscribed before this 16 day of March, 2021, by Christopher Hughes who is the President of Eau Gallie Electric, who is personally known to me or who has produced Ø as identification.

KIM A. LANHAM COMMISSION NUMBER HH 003308 EXPIRES AUG. 30, 2024 BONDED THRU AARON NOTARY Notary Public, State of Florida

NOTARY PUBLIC [signature]
Printed Name of Notary Kim A. Lanham
My Commission expires: 8-30-24

# CERTIFICATE OF LIABILITY INSURANCE

DATE (MM/DD/YYYY): 9/29/2020

THIS CERTIFICATE IS ISSUED AS A MATTER OF INFORMATION ONLY AND CONFERS NO RIGHTS UPON THE CERTIFICATE HOLDER. THIS CERTIFICATE DOES NOT AFFIRMATIVELY OR NEGATIVELY AMEND, EXTEND OR ALTER THE COVERAGE AFFORDED BY THE POLICIES BELOW. THIS CERTIFICATE OF INSURANCE DOES NOT CONSTITUTE A CONTRACT BETWEEN THE ISSUING INSURER(S), AUTHORIZED REPRESENTATIVE OR PRODUCER, AND THE CERTIFICATE HOLDER.

IMPORTANT: If the certificate holder is an ADDITIONAL INSURED, the policy(ies) must have ADDITIONAL INSURED provisions or be endorsed. If SUBROGATION IS WAIVED, subject to the terms and conditions of the policy, certain policies may require an endorsement. A statement on this certificate does not confer rights to the certificate holder in lieu of such endorsement(s).

**PRODUCER**
Sihle Insurance Group, Inc.
5545 N. Wickham Road Suite 101
Melbourne FL 32940

**CONTACT NAME:** Ann Watters
**PHONE (A/C, No, Ext):** 321-422-7890 **FAX (A/C, No):** 321-724-2063
**E-MAIL ADDRESS:** awatters@sihle.com

| INSURER(S) AFFORDING COVERAGE | NAIC # |
|---|---|
| INSURER A : Westfield Insurance Company | 24112 |
| INSURER B : North River Insurance Company | 21105 |
| INSURER C : Western World Insurance Company Inc. | 13196 |
| INSURER D : | |
| INSURER E : | |
| INSURER F : | |

**INSURED** EAUGALL-01
Eau Gallie Electric, Inc.
2012 Aurora Road
Melbourne FL 32935

**COVERAGES** **CERTIFICATE NUMBER:** 609129661 **REVISION NUMBER:**

THIS IS TO CERTIFY THAT THE POLICIES OF INSURANCE LISTED BELOW HAVE BEEN ISSUED TO THE INSURED NAMED ABOVE FOR THE POLICY PERIOD INDICATED. NOTWITHSTANDING ANY REQUIREMENT, TERM OR CONDITION OF ANY CONTRACT OR OTHER DOCUMENT WITH RESPECT TO WHICH THIS CERTIFICATE MAY BE ISSUED OR MAY PERTAIN, THE INSURANCE AFFORDED BY THE POLICIES DESCRIBED HEREIN IS SUBJECT TO ALL THE TERMS, EXCLUSIONS AND CONDITIONS OF SUCH POLICIES. LIMITS SHOWN MAY HAVE BEEN REDUCED BY PAID CLAIMS.

| INSR LTR | TYPE OF INSURANCE | ADDL INSD | SUBR WVD | POLICY NUMBER | POLICY EFF (MM/DD/YYYY) | POLICY EXP (MM/DD/YYYY) | LIMITS | |
|---|---|---|---|---|---|---|---|---|
| A | X COMMERCIAL GENERAL LIABILITY | | | TRA7877068 | 10/1/2020 | 10/1/2021 | EACH OCCURRENCE | $ 1,000,000 |
| | CLAIMS-MADE X OCCUR | | | | | | DAMAGE TO RENTED PREMISES (Ea occurrence) | $ 150,000 |
| | GEN'L AGGREGATE LIMIT APPLIES PER: | | | | | | MED EXP (Any one person) | $ 5,000 |
| | POLICY PRO-JECT LOC | | | | | | PERSONAL & ADV INJURY | $ 1,000,000 |
| | OTHER: | | | | | | GENERAL AGGREGATE | $ 2,000,000 |
| | | | | | | | PRODUCTS - COMP/OP AGG | $ 2,000,000 |
| | | | | | | | | $ |
| A | AUTOMOBILE LIABILITY | | | TRA7877068 | 10/1/2020 | 10/1/2021 | COMBINED SINGLE LIMIT (Ea accident) | $ 1,000,000 |
| | X ANY AUTO | | | | | | BODILY INJURY (Per person) | $ |
| | OWNED AUTOS ONLY / SCHEDULED AUTOS | | | | | | BODILY INJURY (Per accident) | $ |
| | X HIRED AUTOS ONLY / X NON-OWNED AUTOS ONLY | | | | | | PROPERTY DAMAGE (Per accident) | $ |
| | | | | | | | PIP | $ 10,000 |
| B | X UMBRELLA LIAB X OCCUR | | | 582-114865-5 | 10/1/2020 | 10/1/2021 | EACH OCCURRENCE | $ 5,000,000 |
| | EXCESS LIAB CLAIMS-MADE | | | | | | AGGREGATE | $ 5,000,000 |
| | DED X RETENTION $ 0 | | | | | | | $ |
| | WORKERS COMPENSATION AND EMPLOYERS' LIABILITY Y/N | | | | | | PER STATUTE OTH-ER | |
| | ANY PROPRIETOR/PARTNER/EXECUTIVE OFFICER/MEMBER EXCLUDED? (Mandatory in NH) | N/A | | | | | E.L. EACH ACCIDENT | $ |
| | If yes, describe under DESCRIPTION OF OPERATIONS below | | | | | | E.L. DISEASE - EA EMPLOYEE | $ |
| | | | | | | | E.L. DISEASE - POLICY LIMIT | $ |
| A | Inland Marine | | | TRA7877068 | 10/1/2020 | 10/1/2021 | Leased/Rented Equip | $100,000 |
| C | Pollution Liability & | | | EVP1002001-02 | 10/1/2020 | 10/1/2021 | Installation Floater | $35,000 |
| | Professional Liability | | | | | | Aggregate (Prof & Pol | $1,000,000 |

**DESCRIPTION OF OPERATIONS / LOCATIONS / VEHICLES** (ACORD 101, Additional Remarks Schedule, may be attached if more space is required)

**CERTIFICATE HOLDER**

**CANCELLATION**

SHOULD ANY OF THE ABOVE DESCRIBED POLICIES BE CANCELLED BEFORE THE EXPIRATION DATE THEREOF, NOTICE WILL BE DELIVERED IN ACCORDANCE WITH THE POLICY PROVISIONS.

**AUTHORIZED REPRESENTATIVE**

© 1988-2015 ACORD CORPORATION. All rights reserved.



The ACORD name and logo are registered marks of ACORD

# CERTIFICATE OF LIABILITY INSURANCE

DATE (MM/DD/YYYY): 05/15/20

THIS CERTIFICATE IS ISSUED AS A MATTER OF INFORMATION ONLY AND CONFERS NO RIGHTS UPON THE CERTIFICATE HOLDER. THIS CERTIFICATE DOES NOT AFFIRMATIVELY OR NEGATIVELY AMEND, EXTEND OR ALTER THE COVERAGE AFFORDED BY THE POLICIES BELOW. THIS CERTIFICATE OF INSURANCE DOES NOT CONSTITUTE A CONTRACT BETWEEN THE ISSUING INSURER(S), AUTHORIZED REPRESENTATIVE OR PRODUCER, AND THE CERTIFICATE HOLDER.

IMPORTANT: If the certificate holder is an ADDITIONAL INSURED, the policy(ies) must have ADDITIONAL INSURED provisions or be endorsed. If SUBROGATION IS WAIVED, subject to the terms and conditions of the policy, certain policies may require an endorsement. A statement on this certificate does not confer rights to the certificate holder in lieu of such endorsement(s).

**PRODUCER**
Aon Risk Services, Inc of Florida
1001 Brickell Bay Drive, Suite #1100
Miami, FL 33131-4937

CONTACT NAME: Aon Risk Services, Inc of Florida
PHONE (A/C, No, Ext): 800-743-8130 FAX (A/C, No): 800-522-7514
EMAIL ADDRESS: ADP.COI.Center@Aon.com

| INSURER(S) AFFORDING COVERAGE | NAIC # |
|---|---|
| INSURER A : New Hampshire Ins Co | 23841 |
| INSURER B : | |
| INSURER C : | |
| INSURER D : | |
| INSURER E : | |
| INSURER F : | |

**INSURED**
ADP TotalSource CO XXI, Inc.
10200 Sunset Drive
Miami, FL 33173
ALTERNATE EMPLOYER
Eau Gallie Electric Inc
2012 Aurora Rd,
Melbourne, FL 32935

**COVERAGES** **CERTIFICATE NUMBER:** 2878473 **REVISION NUMBER:**

THIS IS TO CERTIFY THAT THE POLICIES OF INSURANCE LISTED BELOW HAVE BEEN ISSUED TO THE INSURED NAMED ABOVE FOR THE POLICY PERIOD INDICATED. NOTWITHSTANDING ANY REQUIREMENT, TERM OR CONDITION OF ANY CONTRACT OR OTHER DOCUMENT WITH RESPECT TO WHICH THIS CERTIFICATE MAY BE ISSUED OR MAY PERTAIN, THE INSURANCE AFFORDED BY THE POLICIES DESCRIBED HEREIN IS SUBJECT TO ALL THE TERMS, EXCLUSIONS AND CONDITIONS OF SUCH POLICIES. LIMITS SHOWN MAY HAVE BEEN REDUCED BY PAID CLAIMS. LIMITS SHOWN ARE AS REQUESTED.

| INSR LTR | TYPE OF INSURANCE | ADDL INSR | SUBR WVD | POLICY NUMBER | POLICY EFF (MM/DD/YYYY) | POLICY EXP (MM/DD/YYYY) | LIMITS | |
|---|---|---|---|---|---|---|---|---|
| | COMMERCIAL GENERAL LIABILITY | | | | | | EACH OCCURRENCE | $ |
| | ☐ CLAIMS-MADE ☐ OCCUR | | | | | | DAMAGE TO RENTED PREMISES (Ea occurrence) | $ |
| | | | | | | | MED EXP (Any one person) | $ |
| | | | | | | | PERSONAL & ADV INJURY | $ |
| | GEN'L AGGREGATE LIMIT APPLIES PER: | | | | | | GENERAL AGGREGATE | $ |
| | ☐ POLICY ☐ PROJECT ☐ LOC | | | | | | PRODUCTS - COMP/OP AGG | $ |
| | ☐ OTHER | | | | | | | $ |
| | AUTOMOBILE LIABILITY | | | | | | COMBINED SINGLE LIMIT (Ea accident) | $ |
| | ☐ ANY AUTO ☐ SCHEDULED AUTOS | | | | | | BODILY INJURY (Per person) | $ |
| | ☐ OWNED AUTOS ONLY ☐ NON-OWNED AUTOS ONLY | | | | | | BODILY INJURY (Per accident) | $ |
| | ☐ HIRED AUTOS ONLY | | | | | | PROPERTY DAMAGE (Per accident) | $ |
| | | | | | | | | $ |
| | ☐ UMBRELLA LIAB ☐ OCCUR | | | | | | EACH OCCURRENCE | $ |
| | ☐ EXCESS LIAB ☐ CLAIMS-MADE | | | | | | AGGREGATE | $ |
| | ☐ DEC ☐ RETENTION $ | | | | | | | |
| A | WORKERS COMPENSATION AND EMPLOYERS' LIABILITY Y / N<br>ANY PROPRIETOR/PARTNER/EXECUTIVE OFFICER/MEMBER EXCLUDED? ☐ (Mandatory in NH)<br>If yes, describe under DESCRIPTION OF OPERATIONS below | N / A | | WC 027115056 CO | 7/1/2020 | 7/1/2021 | X PER STATUTE ☐ OTH-ER | |
| | | | | | | | E.L. EACH ACCIDENT | $ 2,000,000 |
| | | | | | | | E.L. DISEASE - EA EMPLOYEE | $ 2,000,000 |
| | | | | | | | E.L. DISEASE - POLICY LIMIT | $ 2,000,000 |
| | | | | | | | | |

**DESCRIPTION OF OPERATIONS / LOCATIONS / VEHICLES (ACORD 101, Additional Remarks Schedule, may be attached if more space is required)**
All worksite employees working for EAU GALLIE ELECTRIC INC, paid under ADP TOTALSOURCE, INC.'s payroll, are covered under the above stated policy. EAU GALLIE ELECTRIC INC is an alternate employer under this policy.

**CERTIFICATE HOLDER**

Eau Gallie Electric Inc
2012 Aurora Rd
Melbourne, FL 32935

**CANCELLATION**

SHOULD ANY OF THE ABOVE DESCRIBED POLICIES BE CANCELLED BEFORE THE EXPIRATION DATE THEREOF, NOTICE WILL BE DELIVERED IN ACCORDANCE WITH THE POLICY PROVISIONS.

AUTHORIZED REPRESENTATIVE
Aon Risk Services, Inc of Florida

© 1988-2015 ACORD CORPORATION. All rights reserved.



The ACORD name and logo are registered marks of ACORD

# PROJECT REFERENCES

***Eau Gallie Electric was the Prime Contractor on all projects listed***

**TAMPA BAY WATER – WELLFIELDS GENERATOR & MOTOR REPLACEMENT**
Richard Menzies, Tampa Bay Water
813-929-2181 JFox@tampabaywater.org

$2,306,855 Completed: December 2020 Duration: 350 days
Scope: Installed 200kw generators and ATSs at six Wellfield sites. Also replaced 150hp pump motors at 17 Wellfield sites. Completed on time.

**CITY OF COCOA BEACH – LIFT STATION GENERATOR REPLACEMENT**
Brad Kalsow, City of Cocoa Beach Water Reclamation Department
321-302-2608 bkalsow@cityofcocoabeach.com

$463,840 Completed: November 2020 Duration: 250 days
Scope: Installed generators and ATSs at 5 Lift Station sites. Completed on time.

**NOAA/ AOML MIAMI EMERGENCY GENERATOR PROJECT**
Andrew Colegrove, Atlantic Oceanographic & Meteorological Laboratory
305-361-4544 aoml.associate.director@noaa.gov

$886,365 Completed: September 2020 Duration: 90 days
Scope: Install a 750kw generator with an 800A automatic transfer switch and 10,000 Gallon fuel tank. Also included a new panel MD and Transformer TX-G & 30A 600V disconnect installed on the new generator service platform, new circuit breaker MCB, service entrance main circuit breaker with surge suppression. Completed on time.

**CITY OF NAPLES WASTEWATER SWITCHGEAR & MCC REPLACEMENT**
Barry Stein, City of Naples 239-213-4732 bstein@naplesgov.com

$1,180,885 Completed: November 2019
Scope: Replaced switchgear that operates a 480/277V, 3PH, 4-wire in a double-ended Main-Tie-Main/Gen arrangement, with each end powered from the same 1500kva utility transformer. Replaced two MCCs that provide power for waste-water pumps, wastewater processing equipment and onsite pump station. Completed on time.

**TAMPA BAY WATER – PASCO WELL #49 – GENERATOR REPLACEMENT**
Justin Fox, Tampa Bay Water 813-929-4565 JFox@tampabaywater.org

$1,138,300 Completed: October 2019 Duration: 355 days
Scope: Installed a 1250kw CAT generator with a 10,000 gallon fuel tank, a 225kva transformer and a medium voltage switch. Completed on time.

**CITY OF MELBOURNE REVERSE OSMOSIS WTP–TRANSFORMER REPLACEM'T**
Jennifer Spagnoli, City of Melbourne Engineering Department
321-608-7100 Jennifer.Spagnoli@mlbfl.org

$732,519 Completed: September 2017 Duration: 210 days
Scope: Replace two FPL pad mounted transformers, install new underground concrete encased duct bank and pull boxes, add a neutral bus to switchgear.

# 2021

# Eau Gallie Electric

Christopher Hughes, President

## Licenses Held

| | | |
|---|---|---|
| Electrical Contractor, State of Florida<br>Christopher Hughes | EC13003441 | 8-31-22 |
| Electrical Contractor, State of Florida<br>Scott Sallade | EC13007245 | 8-31-22 |
| General Contractor, State of Florida<br>Corey Derfuss | CGC1526728 | 8-31-22 |
| Professional Engineers, State of Florida<br>Christopher Hughes | PE4016 | 2-28-23 |
| Liquefied Petroleum Gas License | LA38520 | 3-31-23 |
| Veteran Business Certification, State of Florida<br>Eau Gallie Electric/Christopher Hughes | | 4-01-22 |

## Other Information

| | |
|---|---|
| Tax ID Number | 59-2694842 |
| DUNS Number | 032253965 |
| Proof of Insurance | Shile & ADP |

2012 Aurora Road | Melbourne, FL 32935
T (321) 259-2885 | F (321)254-1518 | 1-877-434-5577
EG-Electric.com

2012 Aurora Road, Melbourne FL 32935
Phone: (321) 259-2885

# Eau Gallie Electric is celebrating its 73rd anniversary in 2021

We are also proud to announce that Eau Gallie Electric has installed more than 1650 generators & transfer switches within the past 10 years!

## COMPANY PROFILE

Eau Gallie Electric, Inc is a full-service State Certified General Contractor and Unlimited Electrical contractor serving Florida since 1948. Eau Gallie Electric is family owned and a certified Service Disabled Veteran Owned Business. Mr. Christopher V. Hughes is the owner and president of Eau Gallie Electric. Mr. Hughes is a graduate of the United States Military Academy at West Point with a degree in Mechanical Engineering. He is also a State Certified Unlimited Electrical contractor, primary license holder for Eau Gallie Electric (EC13003441), as well as a Professional Engineer in the State of Florida (PE74016). Eau Gallie Electric also holds a State Certified General Contractors license (CGC1526728).

## SERVICES

Eau Gallie Electric offers its customers quality specialty contracting solutions, including electrical construction, energy infrastructure, emergency standby power and facilities maintenance services. Our Services Include:

- Complete electrical distribution systems
- Emergency stand-by generators sales, installation, and maintenance from 5-KW to 6,000-KW
- Design build applications from conceptual to construction documents
- Electrical engineering including signed and sealed documents
- Medium voltage cable installation, transformer replacements
- Lighting and electrical upgrade projects
- Power upgrades and signed and sealed drawings
- UPS, inverter, battery backup, solar systems
- NAVAIDS and Communications in support of the NAS

**US Department of Veterans Affairs**
**Lake Baldwin VA Medical Center**
**5201 Raymond St**
**Orlando, FL**
**(407) 629-1599**
**Contact: Scott Reed, Electrical Supervisor**
**Scott.reed@va.gov**

Complete renovation of hospital emergency power system, including paralleling (1) new 750kW generator with two older existing 600kW generator sets complete with all new 3000A paralleling switchgear. Also includes installation of two 1600A ASCO transfer switches and 1200A panel boards. Included the installation of new 1600A main electrical service to the B&G building as well as new electrical service to the fire pump. Generator accessory installations included retrofit of existing muffler, fuel system, and communication equipment. Temporary backup power was provided to the hospital at all times.



**Florida Department of Transportation**
**District 1 Headquarters**
**801 N. Broadway Ave**
**Bartow, Florida 33830**
**(863) 519-2461**
**Contact: Chad Lewis, Facilities**
**Chad.lewis@dot.state.fl.us**

Complete design-build project to back up entire 3 story FDOT District 1 Headquarters building which is the central data collection and communications for critical government infrastructure. Project included the installation of 2000A transfer switch with an 800kW generator with 3000 gallon sub-base fuel tank, site prep and concrete pad, new 2000A electrical service from the utility company, and all necessary engineering design drawings.



**FDOT Orlando – Generator & Main Electrical Breaker Panel Replacement**
**133 S. Semoran Blvd., Orlando 32801**
**(386) 943-5512**
**Contact: Dave Clarke**

Remove and Replace the existing emergency generator and the main electrical breaker panel at the FDOT Orlando Office Complex located at 133 S. Semoran Blvd., Orlando, Fl.
Installed a 600kw generator, 208Volts, 3 Phase, 4 Wire, 60 Hz at 1800 RPM, with a main UL circuit breaker, 2500 amp, CAT EMCP Control panel with safety shutdowns, engine controls and gauges and 2,500-Gallon, UL 142, FDEP sub base fuel tank.



**Seacoast Utility Authority**
**4200 Hood Rd**
**Palm Beach Gardens, FL**
**(772) 219-2944**
**Contact: John Eason, Consulting Engineer**

Turnkey installation of new 1500kW generator and main breaker service. Included concrete work, all new louvers, new day tank and fuel piping, new complete 316 stainless steel exhaust system, new roof on the generator building, and new wiring into existing transfer switch. Included removal, refurbishment, and complete functional testing of the 2000A main breaker to the water plant which was performed with no loss of power to active water plant.



# Tabulation Sheet

**Agency Name** Village of Palm Springs

**Bid Number** ITB-2021B-004-0-2021/KW

**Bid Name** Emergency Generator Improvements

**Bid Due Date** 03/25/2021 14:00:00

**Bid Opening** **Closed**

5 responses found.

✓ online, offline, ● not submitting, ! not received

| | Company | Responded | Address | Bid Amount | Alt Bid Amount | Declared Attributes | Documents | Sent |
|---|---|---|---|---|---|---|---|---|
| **Complete** | | | | | | | | |
| 1 . | All Florida Contracting Service | 03/25/2021 | 3814 NW 126th Ave, Coral Springs , FL, 33065 | $478650.00 | | | Proposal | ✓ |
| 2 . | Eau Gallie Electric | 04/05/2021 | 2012 Aurora Road, Melbourne, FL, 32935 | $416000.00 | | Small Business, Veteran Owned | Proposal | ✓ |
| 3 . | Hinterland Group Inc. | 03/25/2021 | 2051 W. Blue Heron Blvd., Riviera Beach, FL, 33404 | $486300.00 | | | Proposal | ✓ |
| 4 . | Lawrence Lee Construction Services, Inc. | 03/25/2021 | 50 NE Dixie Hwy, Suite A6, Stuart, FL, 34994 | $553000.00 | | Small Business | Proposal | ✓ |
| 5 . | Zabatt Inc | 03/25/2021 | 4612 Highway Avenue , Jacksonville, FL, 32254 | $541732.00 | | Hispanic Owned | Proposal | ✓ |

HOLTZ CONSULTING ENGINEERS, INC

April 26, 2021

Mr. Paul Ward
Utilities Superintendent
Village of Palm Springs
360 Davis Road
Palm Springs, FL 33461

Subject: **Bid No. 2021B-004 – Emergency Generator Improvements**
**Recommendation to Award**

Dear Mr. Ward,

On March 25, 2021 at 2:00 p.m. bids were opened for the referenced project. There were six (6) bids accepted for the project as follows:

| Bidder | Bid Amount | Acknowledged Addenda? | Included Bid Security? | Completed All Items in Bid Submission Checklist? |
|---|---|---|---|---|
| Cruz Electrical Corp. | $243,700.00 | Y | Y | N |
| Eau Gallie Electric, Inc. | $416,000.00 | Y | Y | Y |
| All Florida Contracting Services, LLC. | $478,650.00 | Y | Y | Y |
| Hinterland Group, Inc. | $486,300.00 | Y | Y | Y |
| Zabatt Engine Services, Inc. | $541,732.00 | Y | Y | Y |
| Lawrence Lee Construction, Inc. | $553,000.00 | Y | Y | Y |

The bids were reviewed by Holtz Consulting Engineers, Inc. (HCE) to evaluate whether the bids are responsive to the bid submittal requirements.

The apparent lower bidder was Cruz Electrical Corp. with a Total Bid Amount of $243,700.00. Their bid was reviewed and included the required bid bond in the amount of five percent of their bid from an acceptable surety company according to the US Department of Treasury. They acknowledged receipt of the addenda in the bid form.

However, Cruz Electrical Corp. did not complete all the items in the Bid Submission Checklist including listing all subcontractors and providing the required financial information outlined in the Qualifications

Statement list of Required Attachments. Due to the incomplete information provided, we must recommend that this bid be rejected as the bid is not considered to be responsive.

The second apparent lower bidder was Eau Gallie Electric, Inc. with a Total Bid Amount of $416,000.00. Their bid was reviewed and included the required bid bond in the amount of five percent of their bid from an acceptable surety company according to the US Department of Treasury. They acknowledged receipt of the addenda in the bid form. The other forms and information required to be submitted with their bid appear to be in order. We therefore consider the bid submitted by Eau Gallie Electric, Inc. to be responsive.

Eau Gallie Electric, Inc. has successfully completed numerous utility construction projects in South Florida, including similar projects for local utilities. The references contacted indicated that they completed their projects generally on time, under budget and in conformance with the contract documents. Eau Gallie Electric, Inc. is a corporation in good standing with the Florida Department of State Division of Corporations. We therefore consider Eau Gallie Electric, Inc. to be a responsible bidder.

Based on the above information, Holtz Consulting Engineers, Inc. considers Eau Gallie Electric, Inc. to be the low responsive and responsible bidder and recommends that they be awarded the contract for the Emergency Generator Improvements Project in the Total Bid Amount of $416,000.00.

Sincerely,

HOLTZ CONSULTING ENGINEERS, INC.



Stephen Fowler, P.E.

270 South Central Boulevard, Suite 207 • Jupiter, Florida 33458
Office: 561.575.2005 • Fax: 561.575.2009

# EMERGENCY GENERATOR IMPROVEMENTS

## PREPARED FOR
## VILLAGE OF PALM SPRINGS

PALM BEACH COUNTY, FLORIDA

SECTIONS 13 & 18, TOWNSHIP 44S, RANGE 42E & 43E

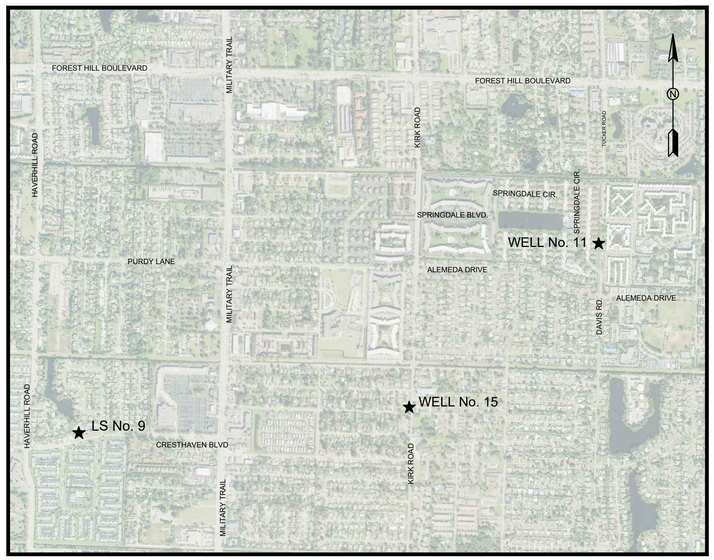


VICINITY MAP

NTS

SHEET INDEX

| SHEET NO. | SHEET TITLE |
|---|---|
| G-1 | Cover |
| G-2 | General Legend |
| C-1 | Lift Station No. 9 Civil Site Plan |
| C-2 | Well No. 11 Civil Site Plan |
| C-3 | Well No. 15 Civil Site Plan |
| CD-1 | Civil Details |
| E-1 | Electrical Notes & Legends |
| E-2 | Lift Station No. 9 Electrical Site Plan |
| E-3 | Well No. 11 Electrical Site Plan |
| E-4 | Well No. 15 Electrical Site Plan |
| E-5 | Lift Station No. 9 Electrical Riser Diagram |
| E-6 | Well No. 11 Electrical Riser Diagram |
| E-7 | Well No. 15 Electrical Riser Diagram |
| E-8 | Panelboard Schedules |
| E-9 | Electrical Details |

JUNE 2020

100% SUBMITTAL


HOLTZ CONSULTING ENGINEERS, INC.
270 SOUTH CENTRAL BLVD., SUITE 207
JUPITER, FLORIDA 33458
PH. (561) 575-2005
Cert. No. 26960


STEPHEN R. FOWLER

License No: 69039

G-1

EMERGENCY GENERATOR IMPROVEMENTS


Drawing Name: F:\PROJECTS\Palm Springs\WA #4 - LS No. 9 Generator Project\Design\Drawings\COVER.dwg Layout Name: COVER - Plotted by: Felix Granados - Date: 6/29/2020 - 9:00 AM - Holtz Consulting Engineers

# GENERAL ABBREVIATIONS

| | |
|---|---|
| ABND | Abandon or Abandoned |
| ACP | Asbestos Cement Pipe |
| ADD'L | Additional |
| AL, Alum | Aluminum |
| APPROX | Approximate |
| ARV | Air Release Valve |
| ASP, Asph | Asphalt |
| BFP | Backflow Preventer |
| BFV | Butterfly Valve |
| B/L | Base Line |
| BLDG | Building |
| BM | Benchmark |
| BO | Blowoff |
| BOP | Bottom of Pipe |
| CATV | Cable Television |
| CB | Catch Basin |
| CO | Cleanout |
| CL | Center Line |
| CLF | Chain Link Fence |
| CIP | Cast Iron Pipe / Cast in Place |
| CMP | Corrugated Metal Pipe |
| CONC | Concrete |
| CONST | Construct/Construction |
| DE | Drainage Easement |
| DI | Ductile Iron |
| DIP | Ductile Iron Pipe |
| DIA | Diameter |
| DR | Dimensional Ratio/Drainage |
| DWY | Driveway |
| EL | Elevation |
| EP | Edge of Pavement |
| ESMT | Easement |
| EOW | Edge of Water |
| EX, EXIST | Existing |
| EHH | Electrical Hand Hole |
| FDOT | Florida Department of Transportation |
| FH | Fire Hydrant |
| FL | Flanged |
| FM | Force Main |
| FND | Found |
| FNPT | Female Nominal Pipe Thread |
| FPL | Florida Power and Light |
| FW | Finished Water |
| GPS | Global Positioning System |
| GV | Gate Valve |
| HB | Hose Bibb |
| HDD | Horizontal Directional Drill |
| HDPE | High Density Polyethylene |
| HYD | Hydrant |
| ID | Identification/Inside Diameter |
| INV | Invert/Invert Elevation |
| IRC | Iron Rod & Cap |
| IRR | Irrigation |
| LAE | Limited Access Easement |
| LF | Linear Feet |
| LP | Light Pole |
| LS | Lift Station |
| LSA | Landscape Area |
| MAX | Maximum |
| MB | Mailbox |
| MECH | Mechanical |
| MH | Manhole |
| MIN | Minimum |
| MISC | Miscellaneous |
| MJ | Mechanical Joint |
| N/D | Nail and Disk |
| No | Number |
| NTS | Not to Scale |
| OC,O/C | On Center |
| OD | Outside Diameter |
| OHW | Overhead Wire |
| ORB | Official Records Book |
| PB | Plat Book |
| PE | Polyethylene Piping |
| PGL | Profile Grade Line |
| PVC | Polyvinyl Chloride/Polyvinyl Chloride Pipe |
| RC | Reinforced Concrete |
| RCP | Reinforced Concrete Pipe |
| RCW | Reclaimed Water |
| RED | Reducer |
| REINF | Reinforce/Reinforced |
| RJ | Restrained Joint |
| RWM | Raw Water Main |
| R/W,ROW | Right of Way |
| S= | Slope (FT/FT)/(Rise/Run) |
| SAN | Sanitary |
| SCH/SCHED | Schedule |
| SEC | Section |
| SF | Silt Fence |
| SP | Sample Point |
| SS | Sanitary Sewer |
| STA | Station |
| TBM | Temporary Benchmark |
| TEMP | Temporary |
| TOB | Top of Bank |
| TON | Top of Nut |
| TOP | Top of Pipe |
| TOS | Toe of Slope |
| TYP | Typical |
| UE | Utility Easement |
| UEC | Underground Electric Conduit |
| UGE | Underground Electric |
| UGT | Underground Telephone |
| UNK | Unknown |
| W/ | With (Combined Form) |
| WF | Wood Fence |
| WM | Water Main or Water Meter |
| WPB | Wire Pullbox |
| WTP | Water Treatment Plant |
| WV | Water Valve |
| WWTP | Waste Water Treatment Plant |

# SURVEY ABBREVIATIONS

## LEGEND:

| | |
|---|---|
| DIP | DUCTILE IRON PIPE |
| E | EAST |
| EL | ELEVATION |
| LB | LICENSED BUSINESS |
| LS | LICENSED SURVEYOR |
| N | NORTH |
| NAVD | NORTH AMERICAN VERTICAL DATUM |
| NGVD | NATIONAL GEODETIC VERTICAL DATUM |
| No. | NUMBER |
| O.R.B. | OFFICIAL RECORDS BOOK |
| P.B.C.R. | PUBLIC RECORDS OF PALM BEACH COUNTY |
| PCN: | PARCEL CONTROL NUMBER |
| PG. | PAGE |
| S | SOUTH |
| SEC | SECTION |
| TON | TOP OF NUT |
| TOP | TOP OF PIPE |
| W | WEST |

## SYMBOL LEGEND:

| | |
|---|---|
| | ANTENNA |
| | BACK FLOW PREVENTOR |
| | BENCHMARK |
| | CHECK VALVE |
| EB | ELECTRIC BOX |
| EM | ELECTRIC METER |
| | GATE VALVE |
| | PALM W/ TRUNK DIAMETER |
| S | SANITARY MANHOLE |
| | SANITARY VALVE |
| | TEE |
| WM | WATER METER |

## PLAT LEGEND:

| | |
|---|---|
| (P) | PLAT No. 1 CRESTHAVEN OF PALM BEACH (P.B. 27, PG. 212, P.B.C.R.) |

# PIPING SYMBOLOGY

- CONCENTRIC REDUCER
- ECCENTRIC REDUCER
- UNION
- BALL VALVE (BV)
- GATE VALVE (GV)
- BUTTERFLY VALVE (BFV)/ ODOR CONTROL DAMPENER
- PLUG VALVE (PV)
- CHECK VALVE (CV)
- PLUG/CAP
- CLEAN OUT (CO)
- TAPPING VALVE
- LINE STOP
- HOSE BIBB
- EXISTING PIPE
- EXISTING BURIED PIPE
- PROPOSED PIPE
- PROPOSED BURIED PIPE
- MECHANICAL JOINT
- FLANGE JOINT
- FLEXIBLE COUPLING
- FLEXIBLE COUPLING WITH THRUST TIES
- ELBOW UP
- ELBOW DOWN
- 90° ELBOW
- TEE UP
- TEE DOWN
- TEE
- CROSS

GENERAL NOTES:

1. THE CONTRACTOR SHALL BE RESPONSIBLE FOR POTHOLING, TEST PITS. ETC. IN THE VICINITY OF THE PROJECT WORK AREA TO LOCATE AND VERIFY THE EXISTING UTILITY LOCATIONS PRIOR TO INITIATING WORK. IT IS THE RESPONSIBILITY OF THE CONTRACTOR TO PROTECT THE EXISTING UTILITIES DURING CONSTRUCTION AT NO ADDITIONAL CONST TO THE OWNER.
2. THE CONTRACTOR SHALL KEEP ALL EXISTING FACILITIES IN OPERATION DURING CONSTRUCTION OF THE IMPROVEMENTS. THE CONTRACTOR IS RESPONSIBLE FOR ANY TEMPORARY BYPASS PUMPING OR TEMPORARY POWER REQUIRED TO KEEP THE EXISTING FACILITIES IN OPERATION DURING CONSTRUCTION.
3. TEMPORARY SHUTDOWNS REQUIRED TO MAKE CONNECTIONS/TIE-INS SHALL BE COORDINATED WITH THE OWNER AND ENGINEER A MINIMUM OF 48 HOURS IN ADVANCED.
4. THE CONTRACTOR IS RESPONSIBLE FOR ALL RESTORATION COSTS RESULTING FROM CONSTRUCTION ACTIVITIES. ALL RESTORATION SHALL BE TO PRE-EXISTING CONDITIONS OR BETTER.

# LINETYPES

| | EXISTING* | PROPOSED* |
|---|---|---|
| AIR | AIR AIR | AIR AIR |
| CABLE TV | CATV CATV | |
| CAUSTIC | NaOH | NaOH |
| CENTER LINE | | |
| CHLORINE | CL CL | CL CL |
| CHLORINE GAS | CL2 CL2 | CL2 CL2 |
| CHLORINE SOLUTION | CLS CLS | CLS |
| CONCENTRATE | CONC CONC | CONC CONC |
| DRAIN | DR DR | DR DR |
| DILUTION WATER | | DW DW |
| EASEMENT | | |
| EFFLUENT | EFF EFF | |
| ELECTRIC | E E | |
| FENCE (BARB/FIELD) | X X | X X |
| FENCE (CHAINLINK) | O O | O O |
| FENCE (WOOD) | WF WF | WF WF |
| FIBER OPTIC | FOC FOC | FOC FOC |
| FIRE MAIN | FIRE FIRE | FIRE |
| FLUORIDE | FL FL | |
| FORCE MAIN | FM FM | FM FM |
| FORCE MAIN (LOW PRESSURE) | LPF LPF | LPF LPF |
| FUEL | FUEL FUEL | FUEL |
| GAS | GAS GAS | |
| GUARDRAIL | | |
| IRRIGATION | IRR IRR | |
| OVERHEAD UTILITIES | OHU OHU | |
| OXIDATION DITCH | | |
| PLANT WATER | PLW PLW | PLW PLW |
| POLYMER | PO PO | PO PO |
| RAILROAD TRACK | | |
| RAW WATER MAIN | RWM | RWM |
| RECLAIMED WATER MAIN | RCW RCW | RCW |
| RETURN ACTIVATED SLUDGE | RAS RAS | RAS RAS |
| RIGHT-OF-WAY | | |
| SAMPLE | SMP SMP | SMP |
| SANITARY SEWER | S S | S S |
| SANITARY SEWER SERVICE | SS SS | SS SS |
| SCUM | SCUM | SCUM |
| SILT FENCE | | SF SF |
| SODIUM HYPOCHLORITE | NaOCL | NaOCL |
| STORM DRAINAGE | ST ST | ST ST |
| TELEPHONE | T T | |
| TOP OF BANK | | |
| TOE OF SLOPE | | |
| TRAFFIC SIGNAL | TS TS | TS TS |
| TURBIDITY BARRIER | | TB TB |
| UNKNOWN | UNK UNK | |
| VACUUM SEWER | VS VS | VS VS |
| WASTE ACTIVATED SLUDGE | WAS WAS | WAS WAS |
| WATER MAIN | WM WM | WM WM |
| WATER SERVICE | WS WS | WS WS |
| WOOD FENCE | WF WF | WF WF |

* DEPICTS ABOVE GRADE — TEXT — TEXT — TEXT —

* DEPICTS BELOW GRADE - - - TEXT - - - TEXT - - - TEXT - - - TEXT -

# CIVIL SYMBOLOGY

- CONSTRUCTION BASE LINE — 0+00
- DIRECTION OF FLOW
- EXIST. SPOT ELEVATION — × 79.5
- REFERENCE ELEVATION — REF. EL. 20.90
- NEW CONTOUR ELEV. — 79.5
- EXIST. UTILITY POLES — UTILITY, POWER, TELEPHONE, LIGHT
- NEW UTILITY POLES — UTILITY, POWER, TELEPHONE, LIGHT
- PIPING CONFLICT LOCATION — C-1
- SAMPLE POINT — SP1
- WATER SURFACE — PLAN; SECTION — EL 48.00
- FIRE HYDRANT — NEW, EXIST.
- EXIST. MANHOLE, DRAINAGE STRUCTURE
- NEW MANHOLE, DRAINAGE STRUCTURE
- TO BE REMOVED/DEMOLISHED

## SECTION/DETAIL SYMBOL

SECTION — 5 / 15 — SECTION LETTER/DETAIL NUMBER; SHEET/DRAWING NO. ON WHICH SECTION/DETAIL IS SHOWN

SCALE:

1 / 101 — SECTION LETTER/DETAIL NUMBER; SHEET/DRAWING NO. ON WHICH SECTION/DETAIL IS SHOWN

SECTION CUT

A — A

SECTION CUT ON DETAILS

PIPE DESIGNATION — 8" DIP FORCE MAIN

- NOMINAL PIPE DIA.(IN.)
- PIPE MATERIAL (IF SHOWN)
- FLOW STREAM IDENTIFICATION (IF SHOWN)

Symbols:

| | |
|---|---|
| # | Pounds/Number |
| ∢ | Angle |
| Ø | Round/Diameter |

811 Know what's **below.** **Call** before you dig.

| DATE | BY | REVISIONS |
|---|---|---|
| | | |

Date: 04-01-2020
Scale: AS NOTED
Design By: HB
Drawn By: FG
Check By: HB

VILLAGE OF PALM SPRINGS
EMERGENCY GENERATOR IMPROVEMENTS

GENERAL LEGEND

HOLTZ CONSULTING ENGINEERS, INC.
270 SOUTH CENTRAL BLVD., SUITE 207
JUPITER, FLORIDA 33458
PH. (561) 575-2005
Cert. No. 26960

STEPHEN R. FOWLER
License No: 69039

G-2

Drawing Name: F:\PROJECTS\Palm Springs\VA #4 - LS No. 9 Generator Project\Design\Drawings\Legend.dwg Layout Name: General Legend - Plotted by: Felix Granados - Date: 6/29/2020 - 9:00 AM - Holtz Consulting Engineers

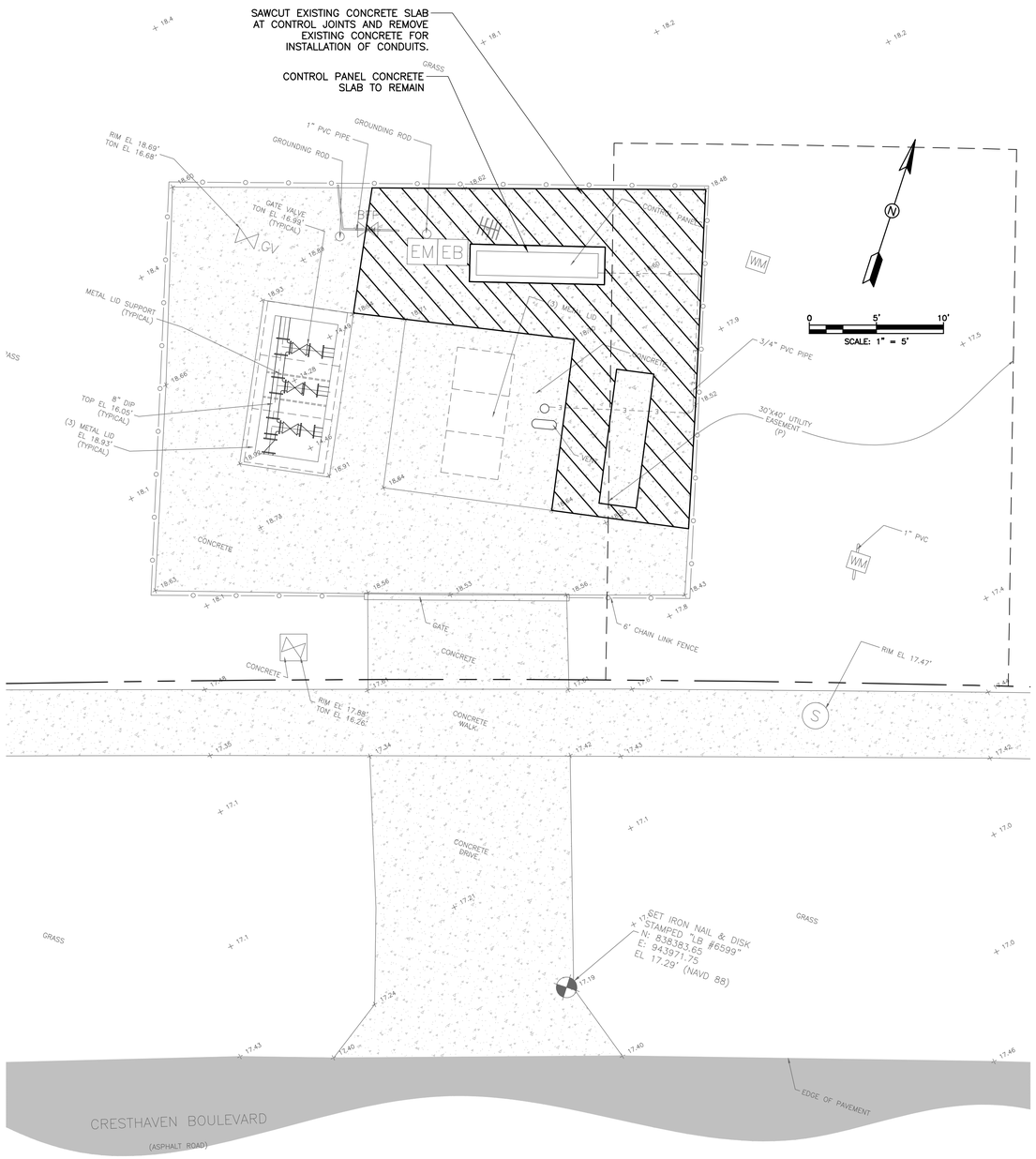


DEMOLITION SITE PLAN

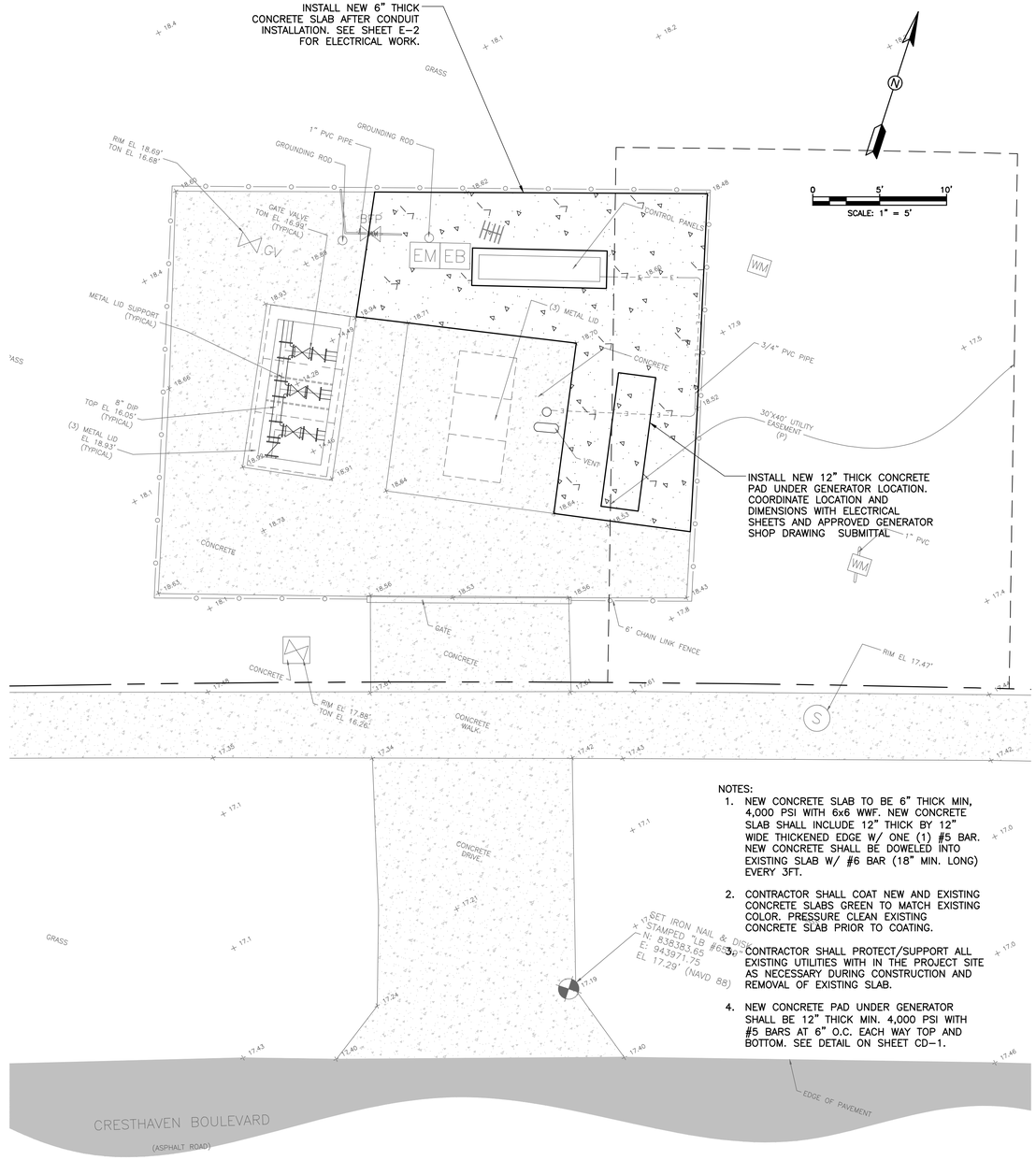


NOTES:

1. NEW CONCRETE SLAB TO BE 6" THICK MIN, 4,000 PSI WITH 6x6 WWF. NEW CONCRETE SLAB SHALL INCLUDE 12" THICK BY 12" WIDE THICKENED EDGE W/ ONE (1) #5 BAR. NEW CONCRETE SHALL BE DOWELED INTO EXISTING SLAB W/ #6 BAR (18" MIN. LONG) EVERY 3FT.
2. CONTRACTOR SHALL COAT NEW AND EXISTING CONCRETE SLABS GREEN TO MATCH EXISTING COLOR. PRESSURE CLEAN EXISTING CONCRETE SLAB PRIOR TO COATING.
3. CONTRACTOR SHALL PROTECT/SUPPORT ALL EXISTING UTILITIES WITH IN THE PROJECT SITE AS NECESSARY DURING CONSTRUCTION AND REMOVAL OF EXISTING SLAB.
4. NEW CONCRETE PAD UNDER GENERATOR SHALL BE 12" THICK MIN. 4,000 PSI WITH #5 BARS AT 6" O.C. EACH WAY TOP AND BOTTOM. SEE DETAIL ON SHEET CD-1.

PROPOSED IMPROVEMENTS SITE PLAN

| DATE | BY | REVISIONS |
|---|---|---|
| | | |

Date: 04-01-2020
Scale: AS NOTED
Design By: HB
Drawn By: FG
Check By: HB

VILLAGE OF PALM SPRINGS
EMERGENCY GENERATOR IMPROVEMENTS

LIFT STATION NO. 9
CIVIL SITE PLAN

HOLTZ CONSULTING ENGINEERS, INC.
270 SOUTH CENTRAL BLVD., SUITE 207
JUPITER, FLORIDA 33458
PH. (561) 575-2005
Cert. No. 26960

STEPHEN R. FOWLER
License No: 69039

C-1

Drawing Name: F:\PROJECTS\Palm Springs\Wo #4 - LS No. 9 Generator Project\Design\Drawings\Plan Sheets.dwg Layout Name: C-1 - Plotted by: Felix Granados - Date: 6/29/2020 - 9:00 AM - Holtz Consulting Engineers

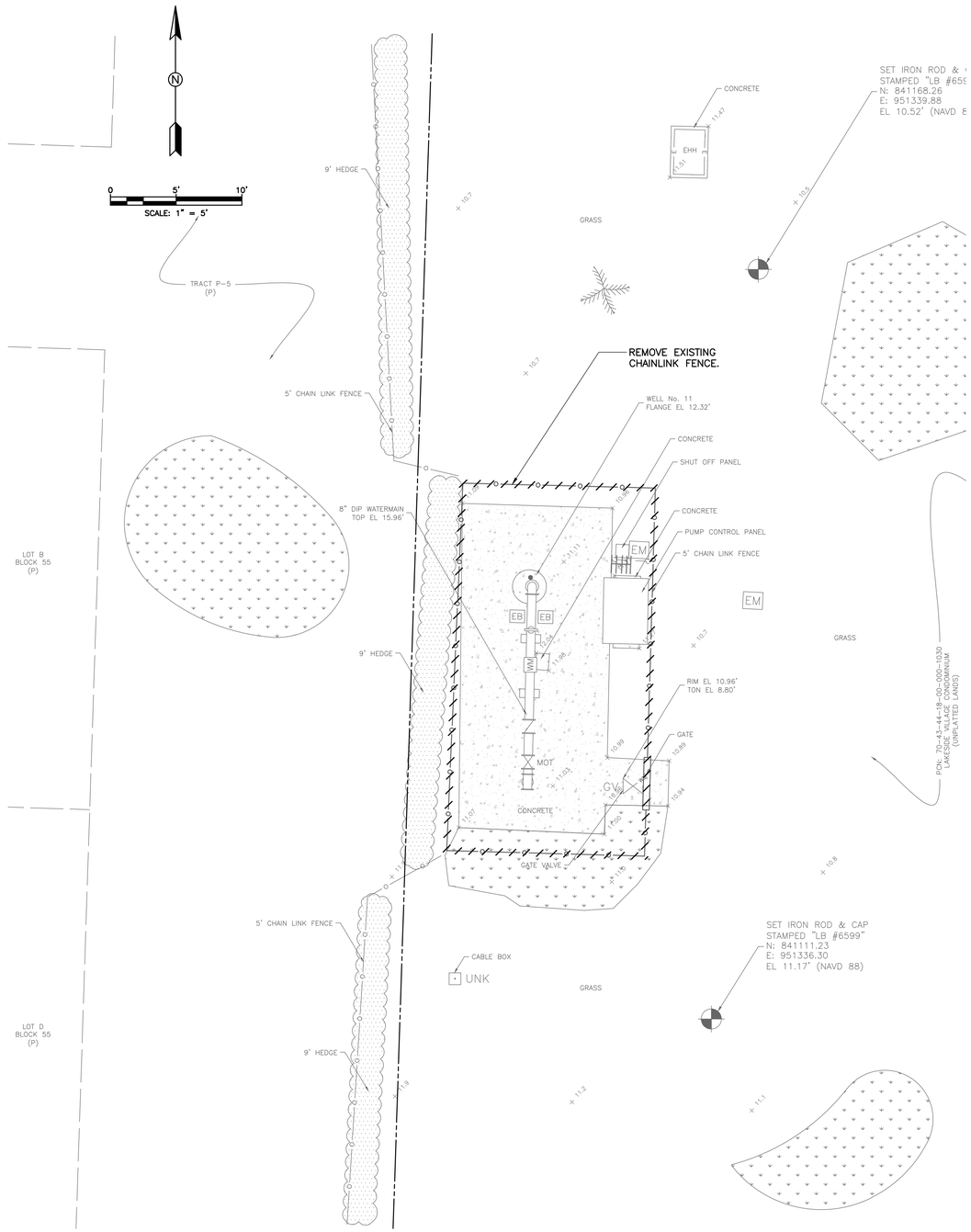


DEMOLITION SITE PLAN

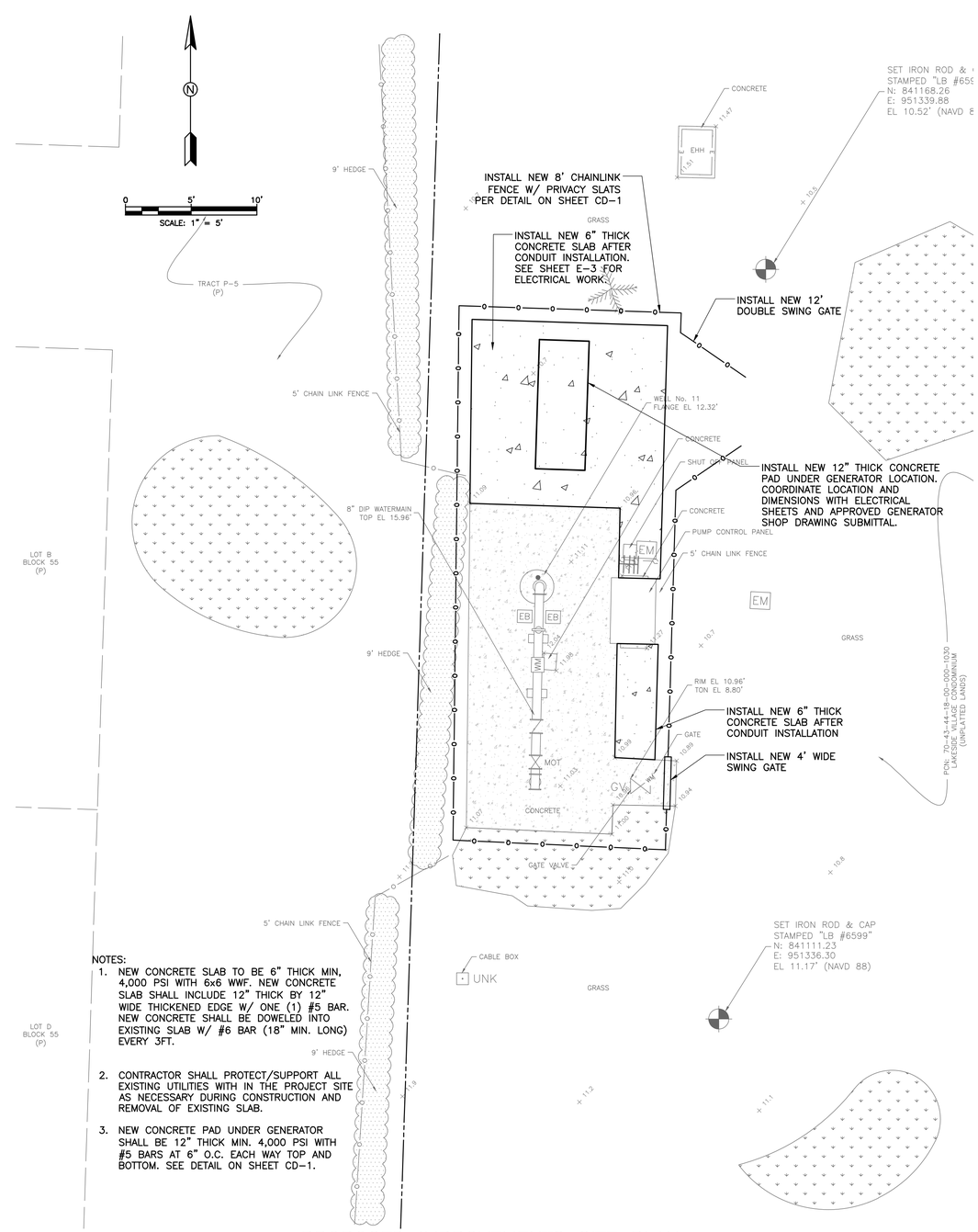


NOTES:

1. NEW CONCRETE SLAB TO BE 6" THICK MIN. 4,000 PSI WITH 6x6 WWF. NEW CONCRETE SLAB SHALL INCLUDE 12" THICK BY 12" WIDE THICKENED EDGE W/ ONE (1) #5 BAR. NEW CONCRETE SHALL BE DOWELED INTO EXISTING SLAB W/ #6 BAR (18" MIN. LONG) EVERY 3FT.
2. CONTRACTOR SHALL PROTECT/SUPPORT ALL EXISTING UTILITIES WITH IN THE PROJECT SITE AS NECESSARY DURING CONSTRUCTION AND REMOVAL OF EXISTING SLAB.
3. NEW CONCRETE PAD UNDER GENERATOR SHALL BE 12" THICK MIN. 4,000 PSI WITH #5 BARS AT 6" O.C. EACH WAY TOP AND BOTTOM. SEE DETAIL ON SHEET CD-1.

PROPOSED IMPROVEMENTS SITE PLAN

| DATE | BY | REVISIONS |
|---|---|---|
| | | |

Date: 04-01-2020
Scale: AS NOTED
Design By: HB
Drawn By: FG
Check By: HB

VILLAGE OF PALM SPRINGS
EMERGENCY GENERATOR IMPROVEMENTS

WELL NO. 11
CIVIL SITE PLAN

HOLTZ CONSULTING ENGINEERS, INC.
270 SOUTH CENTRAL BLVD., SUITE 207
JUPITER, FLORIDA 33458
PH. (561) 575-2005
Cert. No. 26960

STEPHEN R. FOWLER
License No: 69039

C-2

Drawing Name: F:\PROJECTS\Palm Springs,Vill. of - Well No. 11 Generator Project\Design\Drawings\Plan Sheet.dwg Layout Name: C-2 - Plotted by: Felix Granados - Date: 6/29/2020 - 9:00 AM - Holtz Consulting Engineers

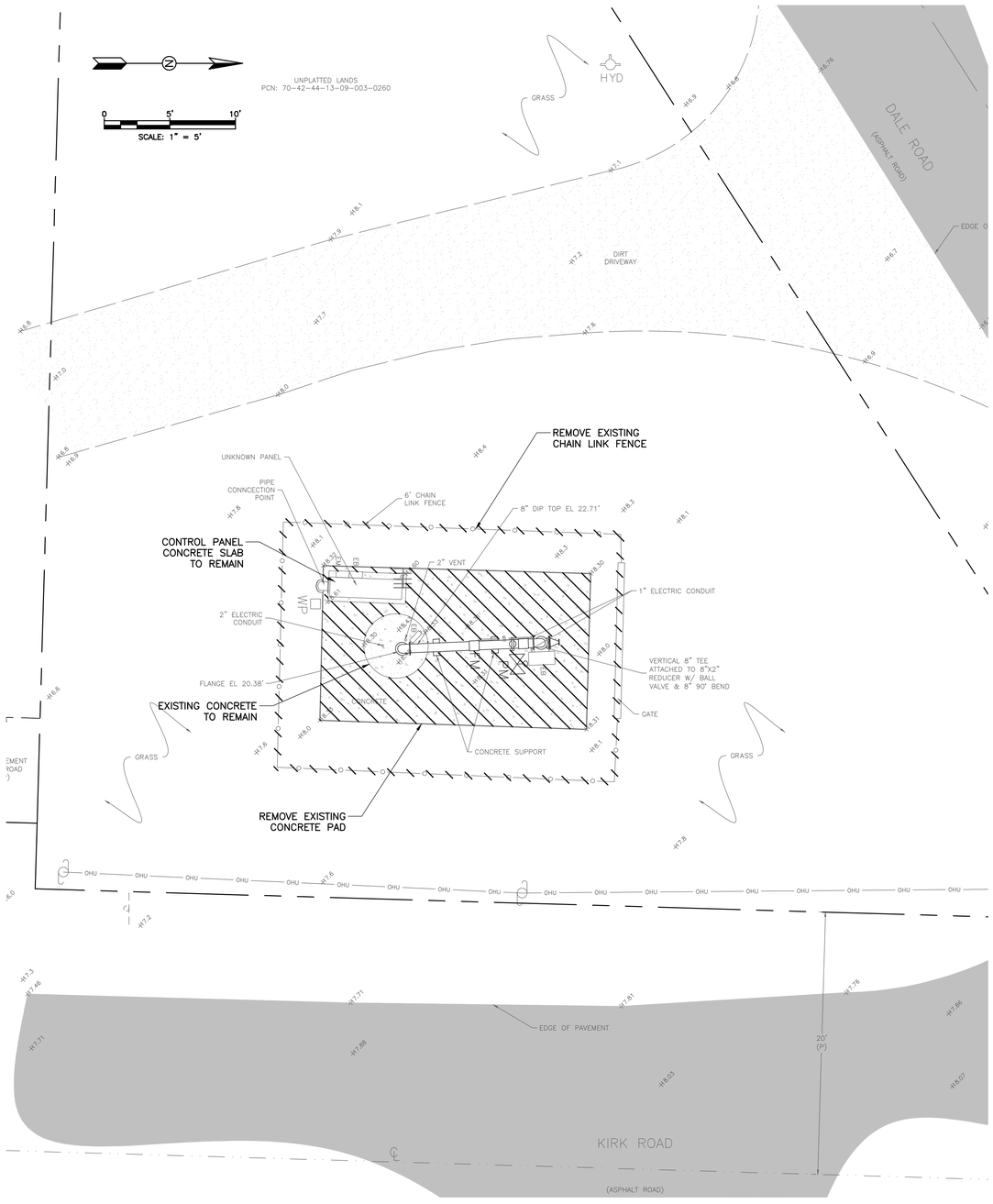


DEMOLITION SITE PLAN

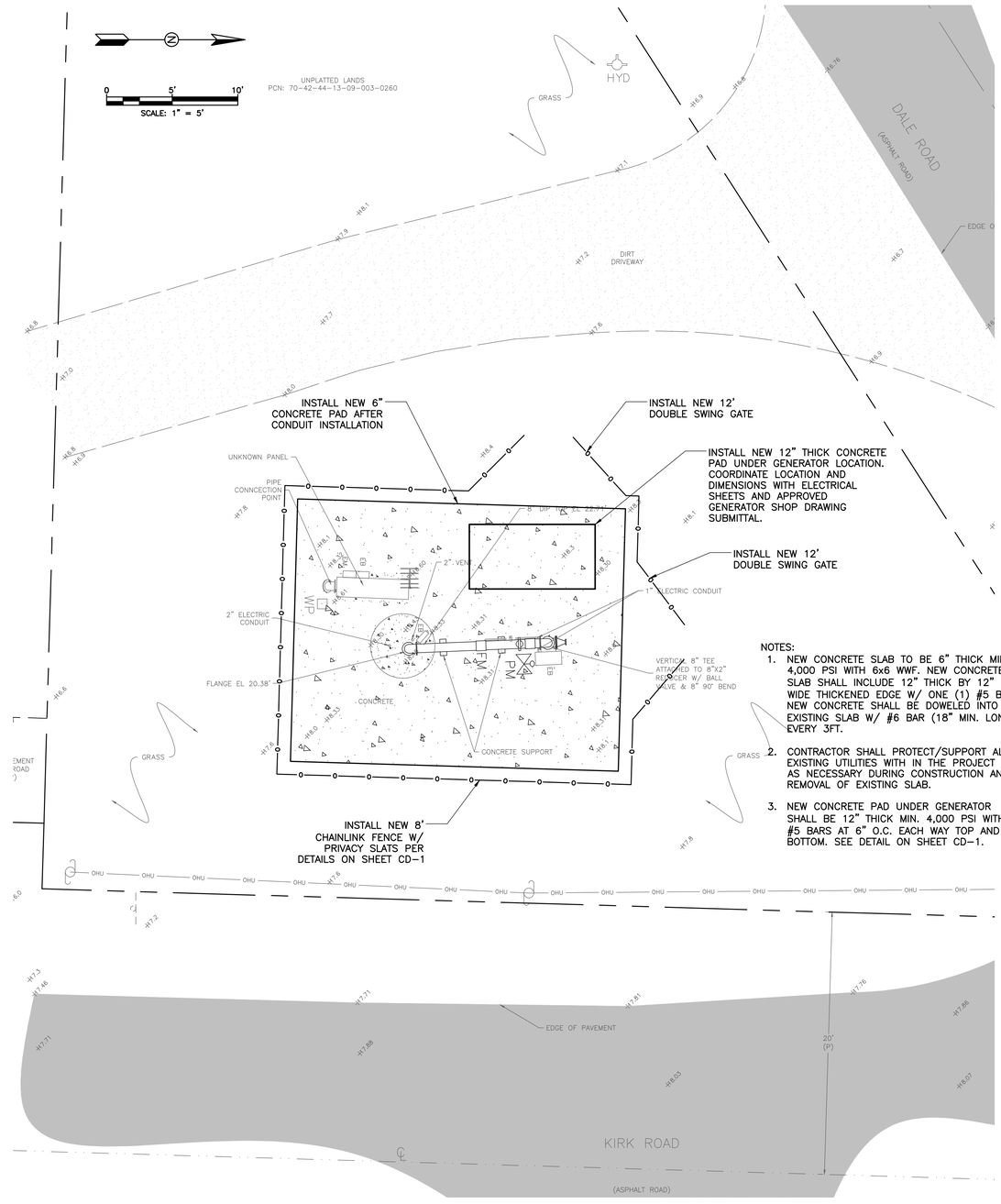


NOTES:

1. NEW CONCRETE SLAB TO BE 6" THICK MIN, 4,000 PSI WITH 6x6 WWF. NEW CONCRETE SLAB SHALL INCLUDE 12" THICK BY 12" WIDE THICKENED EDGE W/ ONE (1) #5 BAR. NEW CONCRETE SHALL BE DOWELED INTO EXISTING SLAB W/ #6 BAR (18" MIN. LONG) EVERY 3FT.
2. CONTRACTOR SHALL PROTECT/SUPPORT ALL EXISTING UTILITIES WITH IN THE PROJECT SITE AS NECESSARY DURING CONSTRUCTION AND REMOVAL OF EXISTING SLAB.
3. NEW CONCRETE PAD UNDER GENERATOR SHALL BE 12" THICK MIN. 4,000 PSI WITH #5 BARS AT 6" O.C. EACH WAY TOP AND BOTTOM. SEE DETAIL ON SHEET CD-1.

PROPOSED IMPROVEMENTS SITE PLAN

| DATE | BY | REVISIONS |
|---|---|---|
| | | |

Date: 04-01-2020
Scale: AS NOTED
Design By: HB
Drawn By: FG
Check By: HB

VILLAGE OF PALM SPRINGS
EMERGENCY GENERATOR IMPROVEMENTS

WELL NO. 15
CIVIL SITE PLAN

HOLTZ CONSULTING ENGINEERS, INC.
270 SOUTH CENTRAL BLVD., SUITE 207
JUPITER, FLORIDA 33458
PH. (561) 575-2005
Cert. No. 26960

STEPHEN R. FOWLER
License No: 69039

C-3

Drawing Name: F:\PROJECTS\Palm Springs\Wk #7 - Well No. 15 Generator Project\Design\Drawings\Plan Sheets.dwg Layout Name: C-3 - Plotted by: Felix Granados - Date: 6/29/2020 - 9:01 AM - Holtz Consulting Engineers

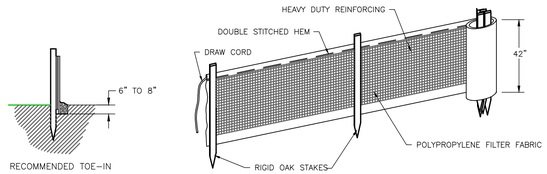


NOTES:

1. SILT FENCE SHALL BE INSTALLED PER MANUFACTURE'S SPECIFICATIONS PRIOR TO THE START OF CONSTRUCTION AND SHALL NOT BE REMOVED UNTIL CONSTRUCTION IS COMPLETE.
2. THE CONTRACTOR SHALL INSPECT AND REPAIR THE SILT FENCE AFTER EACH RAIN EVENT AND REMOVE SEDIMENT WHEN NECESSARY.
3. REMOVED SEDIMENT SHALL BE DEPOSITED IN AN AREA THAT WILL NOT CONTRIBUTE SEDIMENT OFFSITE AND CAN BE PERMANENTLY STABILIZED.
4. THE SILT FENCE SHALL BE PLACED ON SLOPE CONTOUR TO MAXIMIZE ITS PONDING EFFICIENCY.
5. IF DITCH LEVEL IS DEEPER THAN 30", THEN A FLOATING SILT SCREEN SHALL BE USED.

## SILT FENCE DETAIL

NTS

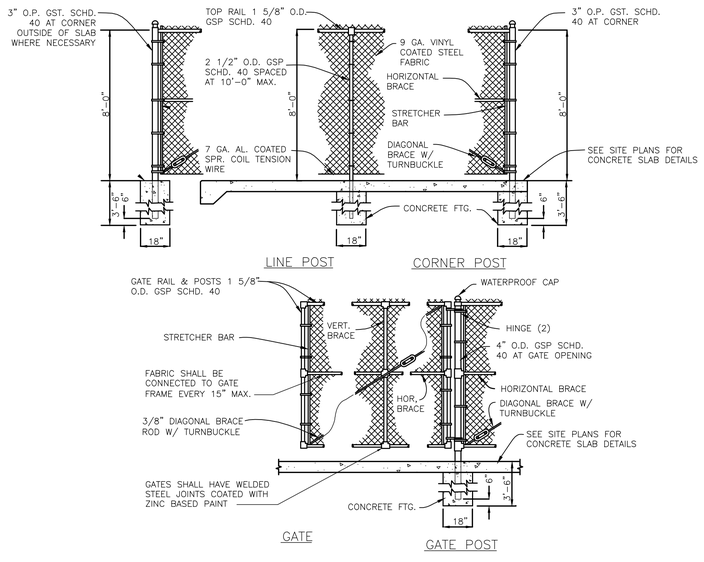


NOTES:

1. GATE TO BE SIZED PER SITE PLANS.
2. VINYL COATED STEEL WOVEN WIRE FABRIC TO BE STRETCHED TAUT W/ STRETCHER BARS AND STRAPS AND FASTENED TOP & BOTTOM AND AT LINE POSTS WITH GALV. PIG RING TIES.
3. GATE TO BE SECURED OPEN WITH GATE STOP SET IN CONCRETE.
4. ALL RAILS, POSTS AND HARDWARE TO BE BLACK VINYL COATED.
5. WHERE POSTS COME IN CONTACT WITH CONCRETE THEY SHALL BE COATED WITH KOPPERS 300M OR APPROVED EQUAL.
6. CALL-OUTS ARE FOR WIRE BEFORE VINYL COATING.
7. VERTICAL BLACK PVC FENCE SLATS REQUIRED.
8. PROVIDE LOCKABLE GATE LATCH W/ INDUSTRIAL DROP ROD AND 2"ø GALV. METAL SLEEVE FOR DROP ROD SET IN CONCRETE. SLEEVE SHALL BE COATED W/ KOPPERS 300M OR APPROVED EQUAL.

## FENCE DETAIL

NTS

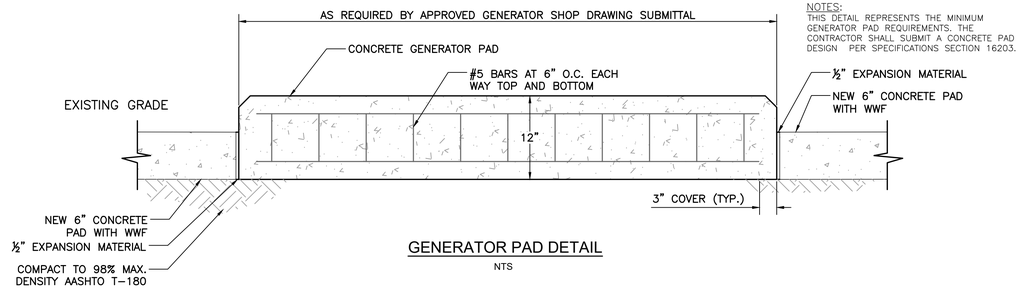


NOTES:
THIS DETAIL REPRESENTS THE MINIMUM GENERATOR PAD REQUIREMENTS. THE CONTRACTOR SHALL SUBMIT A CONCRETE PAD DESIGN PER SPECIFICATIONS SECTION 16203.

## GENERATOR PAD DETAIL

NTS

Drawing Name: F:\PROJECTS\Palm Springs\VA #4 - LS No. 9 Generator Project\Design\Drawings\UE1ALS.dwg Layout Name: CD-1 - Plotted by: Felix Granados - Date: 6/29/2020 - 9:01 AM - Holtz Consulting Engineers

| DATE | BY | REVISIONS |
|---|---|---|
| | | |

Date: 04-01-2020
Scale: AS NOTED
Design By: HB
Drawn By: FG
Check By: HB

VILLAGE OF PALM SPRINGS
EMERGENCY GENERATOR IMPROVEMENTS

CIVIL DETAILS

HOLTZ CONSULTING ENGINEERS, INC.
270 SOUTH CENTRAL BLVD., SUITE 207
JUPITER, FLORIDA 33458
PH. (561) 575-2005
Cert. No. 26960

STEPHEN R. FOWLER
License No: 69039

CD-1

# GENERAL ELECTRICAL NOTES

1. **SCHEMATIC NATURE**
PLAN VIEWS ARE SCHEMATIC IN NATURE AND MEANT TO SHOW THE SCHEMATIC ARRANGEMENT OF EQUIPMENT AND CONDUIT.

2. **APPROVED SHOP DRAWINGS**
USE APPROVED SHOP DRAWINGS FOR LAY OUT OF EQUIPMENT. THE CONTRACT DOCUMENTS WILL VARY FROM THE SHOP DRAWINGS. INFORM THE ENGINEER IMMEDIATELY IF THERE ARE LAY OUT ISSUES OR INADEQUATE SPACE FOR EQUIPMENT OR CLEARANCES. LAND CONDUITS IN OPENINGS OF ENCLOSURES PER THE APPROVED SHOP DRAWINGS, DO NOT USE THE CONTRACT DRAWINGS.

3. **CLEARANCES**
IT SHALL BE THE CONTRACTOR'S RESPONSIBILITY TO MEET N.E.C. CLEARANCES ABOUT EQUIPMENT. THE SAME APPLIES TO RACEWAY SUPPORTS.

4. **ROUTING**
CONDUIT ROUTING IS SCHEMATIC IN NATURE. CONDUIT ROUTING IS SHOWN FOR CLARITY ON THE CONTRACT DRAWINGS. ROUTE CONDUITS AS MAY BE REQUIRED. PROVIDE PULL BOXES AS REQUIRED PER NEC.

5. **FUTURES FACILITIES**
WHERE FUTURE FACILITIES ARE INDICATED. CONDUIT ROUTING SHALL ACCOUNT FOR SUCH FACILITIES.

6. **RESPONSIBILITIES**
BIDDERS, SUPPLIERS, EQUIPMENT VENDORS, GENERAL CONTRACTOR, SUB CONTRACTORS AND OTHER SIMILAR ENTITIES ARE REQUIRED TO READ ALL THE CONTRACT DOCUMENTS INCLUDING DRAWINGS AND SPECIFICATIONS.

7. **HOME RUNS**
CONTRACTOR SHALL COORDINATE HOME RUNS BETWEEN PLAN VIEWS. WHERE ANY CONDUIT IS SHOWN IN ANY PLAN VIEW IT SHALL BE INSTALLED THE ENTIRE LENGTH AS MAY BE REQUIRED.

8. **FIELD VERIFICATIONS**
FIELD VERIFY ALL EXISTING CONDITIONS. MAKE MINOR ADJUSTMENTS AS NEEDED. INFORM OWNER/ENGINEER OF INCONSISTENCIES IMMEDIATELY IF PROBLEMS OR CONFLICTS EXIST.

9. **COMPLETE AND FUNCTIONAL SYSTEMS**
PROVIDE ALL LABOR AND MATERIAL FOR A COMPLETE AND FUNCTIONAL SYSTEM. DEMONSTRATE SYSTEM OPERATION TO THE OWNER/ENGINEER.

10. **GROUNDING**
PROVIDE GROUNDING SYSTEM AS INDICATED ON DRAWINGS AND BY NEC. ALL POWER RACEWAYS REQUIRE GROUNDING CONDUCTORS. BONDING THROUGH RACEWAY SYSTEMS SHALL BE CONTINUOUS FROM MAIN SWITCH GROUND BUSES TO PANEL GROUND BARS, FROM PANEL GROUND BARS TO BRANCH CIRCUIT OUTLETS, MOTORS, LIGHTS, ETC. THESE GROUND CONDUCTORS ARE REQUIRED THROUGHOUT THE PROJECT REGARDLESS OF WHETHER CONDUIT RUNS SHOW GROUND CONDUCTORS ON DRAWINGS.

11. **CONTRACTOR MINIMUM REQUIREMENTS**
PROVIDE AND INSTALL A COMPLETE ELECTRICAL SYSTEM AS INDICATED ON THE DRAWINGS. ITEMS NOT SHOWN BUT OBVIOUSLY NECESSARY FOR A COMPLETE SYSTEM SHALL BE INCLUDED.

THE CONTRACTOR SHALL OBTAIN ALL NECESSARY PERMITS, INSPECTIONS AND APPROVALS.

ALL WORK SHALL CONFORM TO THE NATIONAL ELECTRICAL CODE, NFPA, AND THE LOCAL BUILDING CODES. ALL COMPONENTS SHALL BE U.L. APPROVED.

CONTRACTOR SHALL BE RESPONSIBLE FOR LOCATING ALL CONCEALED FACILITIES BEFORE ANY WORK BEGINS.

12. **SCOPE OF WORK**
A. COORDINATE NEW ELECTRICAL EQUIPMENT.
B. DEMO EXISTING EQUIPMENT.
C. INSTALL NEW EQUIPMENT.
D. RESTORE AREAS TO ORIGINAL CONDITION.

13. **CONDUIT**
CONDUIT SIZES AS SHOWN ON THE DRAWINGS ARE MINIMUM. THE CONTRACTOR MAY INCREASE AS REQUIRED FOR EASE OF PULLING.

ALL EXPOSED CONDUIT SHALL BE NEATLY INSTALLED AND RUN PARALLEL OR PERPENDICULAR TO STRUCTURAL ELEMENTS. SUPPORTS AND MOUNTING HARDWARE SHALL BE 316 SS. CONDUITS SHALL HAVE BURRS REMOVED WITH A REAMER. CONDUITS ENTERING CABINETS SHALL HAVE LOCK NUTS INSIDE AND OUT UNLESS ENTRANCE IS THREADED. NYLON INSULATED BUSHING SHALL BE USED ON ALL CONDUIT TERMINATIONS.

ALL UNDERGROUND CONDUITS SHALL BE INSTALLED 24" BELOW FINAL GRADE.

ALL BURIED CONDUIT SHALL BE PVC UNLESS INDICATED; SERVICE CONDUIT SHALL BE PVC SCHEDULE 80 OR RIGID GALVANIZED STEEL.

14. **JUNCTION BOXES**
PROVIDE ADDITIONAL BOXES AS MAY BE REQUIRED. PROVIDE NEMA 3R OUTSIDE.

15. **CONDUCTORS**
CONDUCTORS SHALL BE COPPER STRANDED TYPE THWN WITH 75°C RISE INSULATION.

GROUNDING CONDUCTORS SHALL BE TINNED COPPER 600V RATED #6 MINIMUM GAUGE.

MULTICONDUCTOR LABELS SHALL BE STRANDED 14 GAUGE, 600V, THWN INSULATED WITH PVC JACKET.

16. **SHUT DOWNS**
CONTRACTOR SHALL COORDINATE ANY POWER DOWNTIME WITH FPL AND THE OWNER. ANY POWER DOWN TIME SHALL BE APPROVED BY THE OWNER.

17. **RESTORATION**
CONTRACTOR SHALL RESTORE TO ORIGINAL CONDITION ALL FACILITIES HE DISTURBS. CONTRACTOR SHALL PROVIDE CLEANUP, AND PROPER DISPOSAL, AND PAY ALL FEES FOR ALL DEMOLISHED MATERIALS AND THE LIKE.

18. **WARRANTY**
CONTRACTOR SHALL WARRANT LABOR AND MATERIALS FOR A PERIOD OF ONE (1) YEAR FROM THE OWNER'S ACCEPTANCE OF THE COMPLETED PROJECT.

19. **STATION CONTROL PANEL & RTU**
EXISTING LSCP & RTU SHALL REMAIN, PROVIDE TEMP. POWER TO KEEP STATION OPERATIONAL AS REQUIRED.

# ELECTRICAL ABBREVIATIONS

| | |
|---|---|
| CM | COMPRESSOR |
| CR | CONTROL RELAY |
| CP | CONTROL PANEL |
| DISC | DISCONNECT SWITCH |
| ETM | ELAPSED TIME METER |
| F | FUSE |
| FSA | FIELD SURGE ARRESTOR |
| GFI | GROUND FAULT INTERRUPTER |
| HOA | HAND-OFF-AUTO |
| HOR | HAND-OFF-REMOTE |
| IPB | INST. PULL BOX |
| LA | LIGHTNING ARRESTER |
| MCU | MARTIN COUNTY UTILITIES |
| OL | OVER LOAD RELAY |
| PB | PUSH BUTTON |
| PDP | POWER DIST. PANEL |
| PM | POWER MONITOR |
| R,G,A | RED, GREEN, AMBER PILOT LIGHT |
| SA | SURGE ARRESTER |
| SS | SELECTOR SWITCH OR 316 STAINLESS STEEL |
| TS | TEST SWITCH |
| WP | WEATHER PROOF |
| ZSC | POSITION SWITCH CLOSED |
| ZSO | POTION SWITCH OPEN |

# MATERIAL SCHEDULE

| LOCATION | CONDUIT | ENCLOSURE MATERIALS | ENCLOSURE NEMA RATING | FASTENERS, STRUT, THREADED ROD, ETC. | REMARKS |
|---|---|---|---|---|---|
| **EXTERIOR** | | | | | |
| BELOW GRADE | PVC SCHED. 40 | CONCRETE BOXES | N/A | 316 SS | |
| ABOVE GRADE | PVC SCHED. 80 | 316 SS | 4X | 316 SS | |
| | | | | | |

**GENERAL NOTES**

1. THE SCHEDULE SHALL ESTABLISH THE MINIMUM LEVEL OF QUALITY FOR MATERIALS. UNLESS OTHERWISE INDICATED ON THE DRAWINGS OR IN THE SPECIFICATIONS
2. THE SCHEDULE SHALL NOT APPLY TO POWER TRANSFORMERS, LIGHT FIXTURES AND THE LIKE, THOSE ELEMENTS ARE NOTED OR INDICATED ELSEWHERE

**LEGEND**

| | |
|---|---|
| N/A | NOT APPLICABLE |
| 316 SS | 316 STAINLESS STEEL |

# ELECTRICAL LEGEND

- EXIST. LINETYPE
- RACEWAY EXPOSED
- LIGHTING RACEWAY CONCEALED
- RACEWAY CONCEALED
- RACEWAY TURNED UP/DOWN
- (5) MOTOR
- TRANSFORMER
- FUSE
- CIRCUIT BREAKER
- CAPACITOR
- LIGHTNING ARRESTER
- SAFETY DISCONNECT SWITCH, HP RATED
- GROUND
- DUPLEX, 14" AFF
- LEVEL SWITCH, FLOAT SWITCH
- THERMAL SWITCH
- HEATER
- (G) PILOT LIGHT
- RTM RUN TIME METER
- SELECTOR SWITCH
- PUSH BUTTON
- ON-OFF SWITCH
- NORMALLY OPEN CONTACT
- NORMALLY CLOSED CONTACT
- [J] JUNCTION BOX
- PANELBOARD, ELECTRICAL EQUIP. ENCL
- [M] MOTOR OPERATED VALVE
- RED, MAINTAINED PUSH BUTTON
- TIMING CONTACT
- CONTROL RELAY, MOTOR STARTER, ETC.
- C01 DENOTES CONDUIT TAG 01
- C01, C02 DENOTES SEPARATE CONDUITS WITH SEPARATE WIRE
- A-1 DENOTES PANELBOARD A, CIRCUIT 3




# AERIAL PLAN

NTS


C&W engineering
ELECTRICAL CONSULTANTS
2775 VISTA PARKWAY, SUITE G-6
WEST PALM BEACH, FL. 33411
(561) 642-5333
58084
REGISTRATION NUMBERS
C & W ENGINEERING INC. CA# 33315
MICHAEL A. GUIDA, P.E. 60755


| DATE | BY | REVISIONS |
|---|---|---|
| | | |

Date: 04/30/2020
Scale: AS NOTED
Design By: JLR
Drawn By: AOD
Check By: MAG

VILLAGE OF PALM SPRINGS
EMERGENCY GENERATOR IMPROVEMENTS

ELECTRICAL NOTES & LEGENDS


HOLTZ CONSULTING ENGINEERS, INC.
HCE
270 SOUTH CENTRAL BLVD., SUITE 207
JUPITER, FLORIDA 33458
PH. (561) 575-2005
Cert. No. 26960


MICHAEL A. GUIDA
License No: 60755

E-1


Drawing Name: \\NEWSERVER-PC\Dropbox\JOBS\58-Holtz Consulting former ( MLJ\58084 VPS WELLS AND LIFT STATION GENERATOR ADDITION REHABILITATION\DRAWINGS\01 Electrical Site Plans.dwg Layout Name: E-1 - Plotted by: Jose - Date: 6/26/2020 - 1:00 PM - Holtz Consulting Engineers

## SPECIFIC ELECTRICAL NOTES

1. INSTALL WIREWAY UNDER EXISTING MAIN DISCONNECT. SHOWN IN FRONT FOR CLARITY.
2. PROVIDE I/O AS REQUIRED FOR PROPOSED DISCRETE SIGNALS FROM ATS AND GENERATOR.

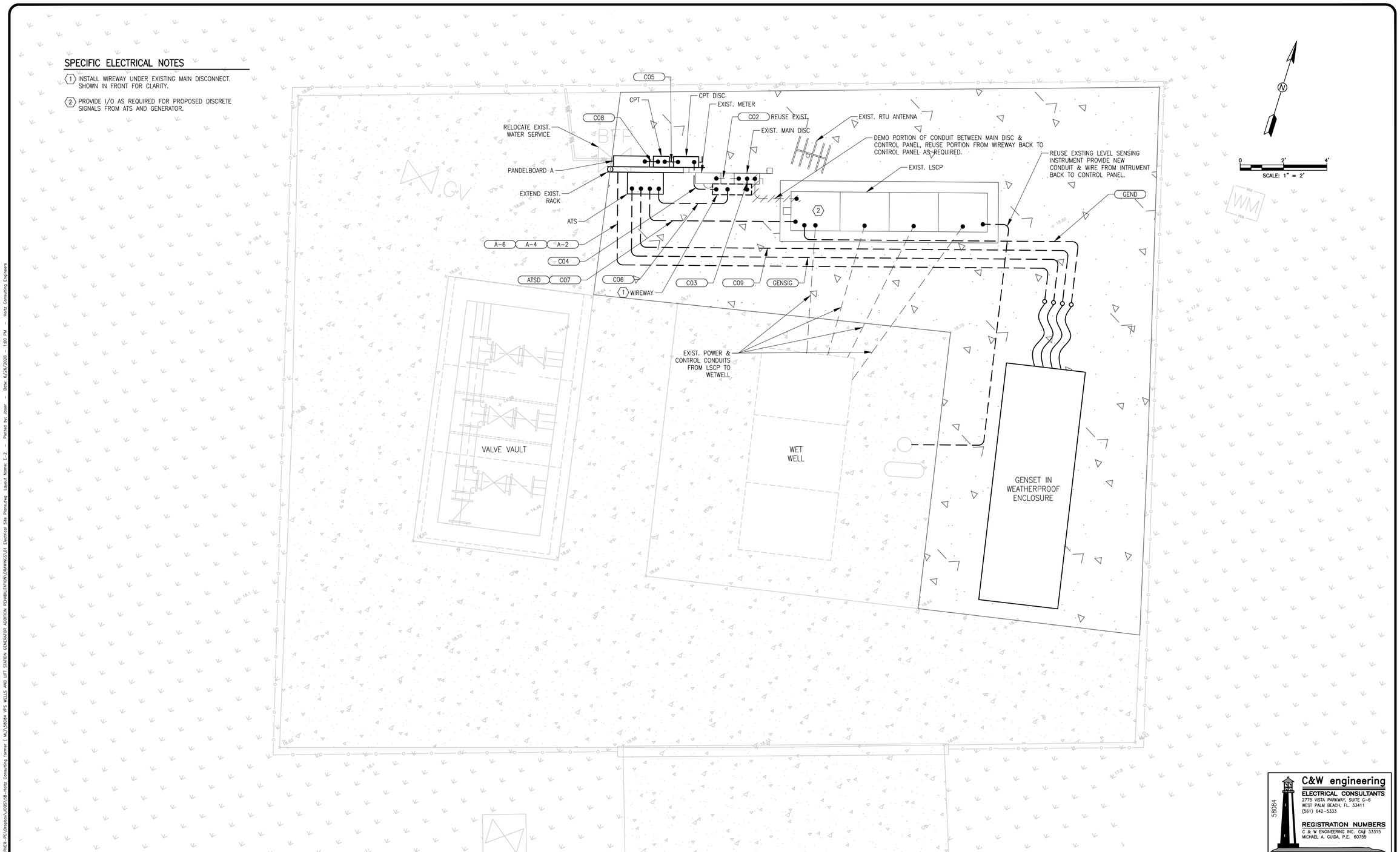



C&W engineering
ELECTRICAL CONSULTANTS
2775 VISTA PARKWAY, SUITE G-6
WEST PALM BEACH, FL. 33411
(561) 642-5333
REGISTRATION NUMBERS
C & W ENGINEERING INC. CA# 33315
MICHAEL A. GUIDA, P.E. 60755
56084


| DATE | BY | REVISIONS |
|---|---|---|
| | | |

Date: 04/30/2020
Scale: AS NOTED
Design By: JLR
Drawn By: AOD
Check By: MAG

VILLAGE OF PALM SPRINGS
EMERGENCY GENERATOR IMPROVEMENTS

LIFT STATION NO. 9 ELECTRICAL SITE PLAN


HOLTZ CONSULTING ENGINEERS, INC.
270 SOUTH CENTRAL BLVD., SUITE 207
JUPITER, FLORIDA 33458
PH. (561) 575-2005
Cert. No. 26960


MICHAEL A. GUIDA
License No: 60755

E-2


Drawing Name: \\NEWSERVER-PC\Dropbox\JOBS\38-Holtz Consulting former ( MJ)\56084 WPS WELLS AND LIFT STATION GENERATOR ADDITION REHABILITATION\DRAWINGS\01 Electrical Site Plans.dwg Layout Name: E-2 - Plotted by: Joser - Date: 6/26/2020 - 1:00 PM - Holtz Consulting Engineers

## SPECIFIC ELECTRICAL NOTES

1. INSTALL WIREWAY UNDER EXISTING MAIN DISCONNECT. SHOWN IN FRONT FOR CLARITY.
2. PROVIDE I/O AS REQUIRED FOR PROPOSED DISCRETE SIGNALS FROM ATS AND GENERATOR.

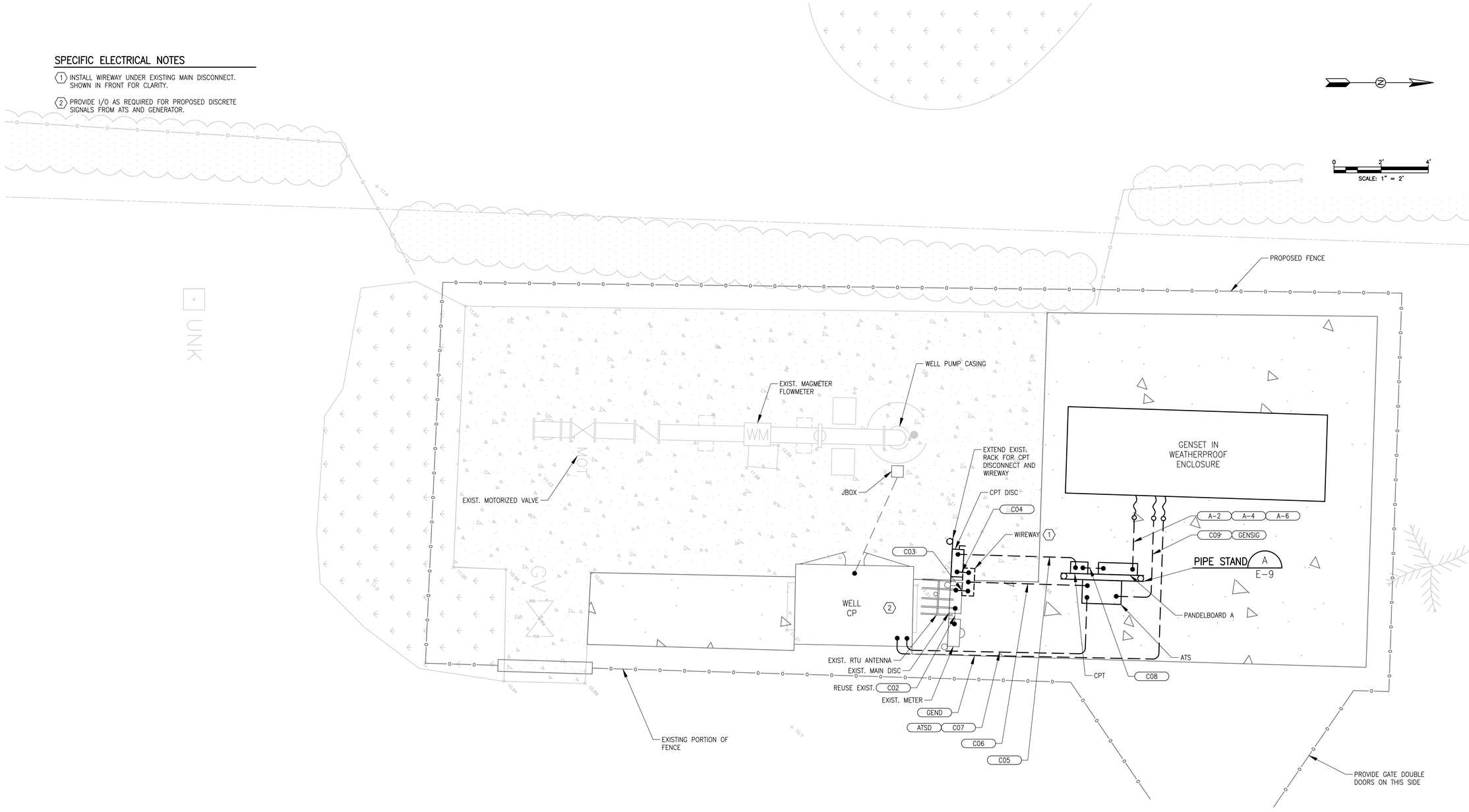


NOTE: EXISTING POWER AND CONTROL CONDUITS TO PUMP AND WELL FIELD INSTRUMENTS TO CONTROL PANEL NOT SHOWN ON PLAN


C&W engineering
ELECTRICAL CONSULTANTS
2775 VISTA PARKWAY, SUITE G-6
WEST PALM BEACH, FL. 33411
(561) 642-5333
REGISTRATION NUMBERS
C & W ENGINEERING INC. CA# 33315
MICHAEL A. GUIDA, P.E. 60755
58084


| DATE | BY | REVISIONS |
|---|---|---|
| | | |

Date: 04/30/2020
Scale: AS NOTED
Design By: JLR
Drawn By: AOD
Check By: MAG

VILLAGE OF PALM SPRINGS
EMERGENCY GENERATOR IMPROVEMENTS

WELL NO. 11 ELECTRICAL SITE PLAN


HOLTZ CONSULTING ENGINEERS, INC.
270 SOUTH CENTRAL BLVD., SUITE 207
JUPITER, FLORIDA 33458
PH. (561) 575-2005
Cert. No. 26960
MICHAEL A. GUIDA
License No: 60755


E-3


Drawing Name: \\NEWSERVER-PC\Dropbox\JOBS\58-Holtz Consulting former ( #L)\58084 VPS WELLS AND LIFT STATION GENERATOR ADDITION REHABILITATION\DRAWINGS\01 Electrical Site Plans.dwg Layout Name: E-3 - Plotted By: Joser - Date: 6/26/2020 - 1:00 PM - Holtz Consulting Engineers

## SPECIFIC ELECTRICAL NOTES

1. INSTALL WIREWAY UNDER EXISTING MAIN DISCONNECT. SHOWN IN FRONT FOR CLARITY.
2. PROVIDE I/O AS REQUIRED FOR PROPOSED DISCRETE SIGNALS FROM ATS AND GENERATOR.

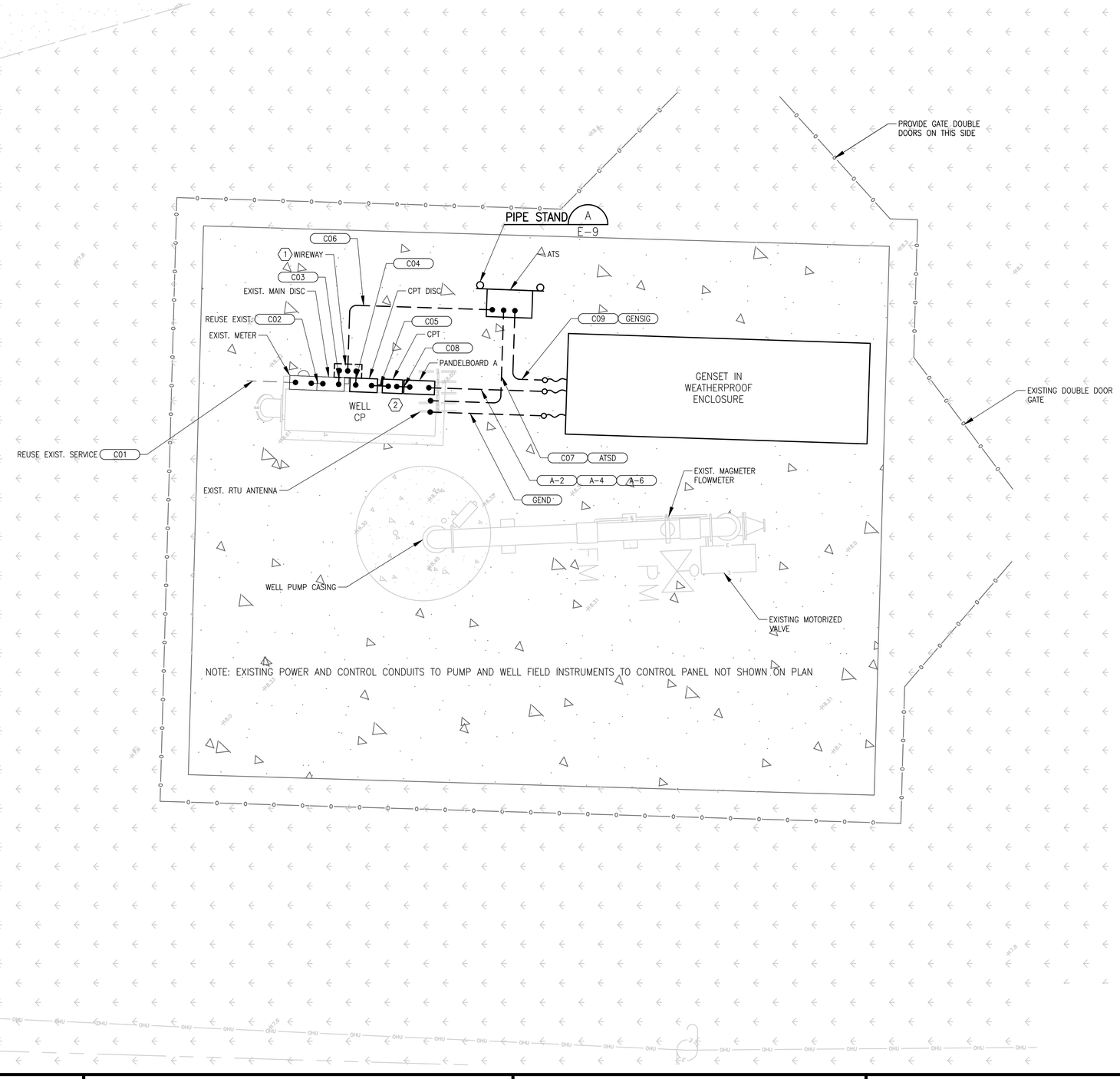



C&W engineering
ELECTRICAL CONSULTANTS
2775 VISTA PARKWAY, SUITE G-6
WEST PALM BEACH, FL. 33411
(561) 642-5333

REGISTRATION NUMBERS
C & W ENGINEERING INC. CA# 33315
MICHAEL A. GUIDA, P.E. 60755

58084


| DATE | BY | REVISIONS |
|---|---|---|
| | | |

Date: 04/30/2020
Scale: AS NOTED
Design By: JLR
Drawn By: AOD
Check By: MAG

VILLAGE OF PALM SPRINGS
EMERGENCY GENERATOR IMPROVEMENTS

WELL NO. 15 ELECTRICAL SITE PLAN


HOLTZ CONSULTING ENGINEERS, INC.
270 SOUTH CENTRAL BLVD., SUITE 207
JUPITER, FLORIDA 33458
PH. (561) 575-2005
Cert. No. 26960

MICHAEL A. GUIDA
License No: 60755


E-4


Drawing Name: \\NEWSERVER-PC\Dropbox\2585\08-Holtz Consulting former ( W)\58084 VPS WELLS AND LIFT STATION GENERATOR ADDITION REMEDIATION\DRAWINGS\01 Electrical Site Plans.dwg - Layout Name: E-4 - Plotted by: Joser - Date: 6/26/2020 - 1:00 PM - Holtz Consulting Engineers

## SPECIFIC ELECTRICAL NOTES

1. THE CONTRACTOR SHALL INSTALL ALL NEW EQUIPMENT WHILE OBSERVING NEC CLEARANCES.
2. REMOVE WIRES BETWEEN MAIN AND LSCP. REUSE PORTION OF EXISTING CONDUIT FOR NEW WIRES FROM ATS THROUGH WIREWAY TO LSCP.
3. COORDINATE W/OWNER AND PROVIDE I/O SIGNALS TO EXISTING RTU AS REQUIRED. RTU MODIFICATIONS AND PROGRAMMING SHALL BE OWNER FURNISHED BY OWNER'S RTU CONTRACTOR.
4. 7.5KVA, 480:120/240V, 1ø, 4X CPT.

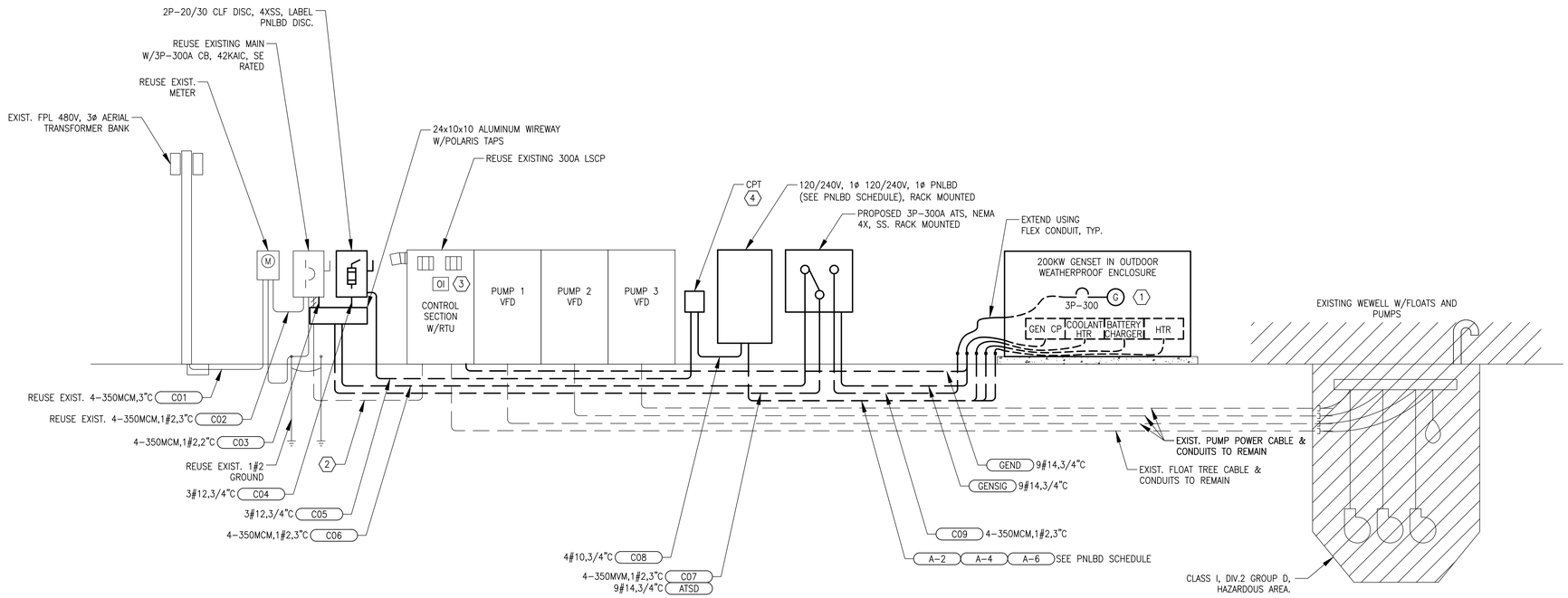


## LS9 480V 3ø ELECTRICAL RISER DIAGRAM, CLASS 1, DIV. 2, GROUP D HAZARDOUS AREA

### 480V 3ø LOAD CALCULATION

| DESCRIPTION | AMPS |
|---|---|
| PUMP 1 (29HP) x 125% | 50 |
| PUMP 2 (29HP) | 40 |
| PUMP 3 (29HP) | 40 |
| CONTROLS & GEN. | 10 |
| TOTAL | 140 |
| EXISTING 480V 3ø SERVICE | 300A |

EXISTING SERVICE VOLTAGE DROP IS LESS THAN 2%
BRANCH CIRCUITS ARE LESS THAN 3% VOLTAGE DROP

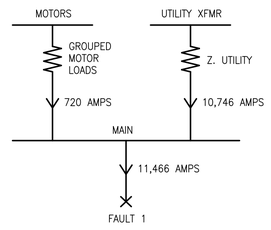


FAULT 1 = GROUPED MOTOR + UTILITY

GROUPED MOTOR LOADS = (3 @ 29HP) X 6.0

= (3 X 40A) X 6.0

= 720 AMPS

UTILITY = 10,746 AMPS

FAULT = 720 AMPS + 10,746 AMPS = 11,466 AMPS

## FAULT CURRENT CALCULATION


C&W engineering
ELECTRICAL CONSULTANTS
2775 VISTA PARKWAY, SUITE G-6
WEST PALM BEACH, FL. 33411
(561) 642-5333
REGISTRATION NUMBERS
C & W ENGINEERING INC. CA# 33315
MICHAEL A. GUIDA, P.E. 60755
58084


| DATE | BY | REVISIONS |
|---|---|---|
| | | |

Date: 04/30/2020
Scale: AS NOTED
Design By: JLR
Drawn By: AOD
Check By: MAG

VILLAGE OF PALM SPRINGS
EMERGENCY GENERATOR IMPROVEMENTS

LIFT STATION NO. 9
ELECTRICAL RISER DIAGRAM


HOLTZ CONSULTING ENGINEERS, INC.
HCE
270 SOUTH CENTRAL BLVD., SUITE 207
JUPITER, FLORIDA 33458
PH. (561) 575-2005
Cert. No. 26960


MICHAEL A. GUIDA
License No: 60755

E-5


Drawing Name: \\NEWSERVER-PC\Dropbox\JOBS\58-Holtz Consulting former ( ML)\58084 VPS WELLS AND LIFT STATION GENERATOR ADDITION RENABILITATION\DRAWINGS\02 Electrical Details.dwg Layout Name: E-5 - Plotted by: Joser - Date: 6/26/2020 - 1:00 PM - Holtz Consulting Engineers

## SPECIFIC ELECTRICAL NOTES

1. THE CONTRACTOR SHALL INSTALL ALL NEW EQUIPMENT WHILE OBSERVING NEC CLEARANCES.
2. DEMO EXISTING CONDUIT AND WIRES ABOVE GROUND BETWEEN MAIN AND LSCP. REPLACE PORTION OF CONDUIT AND WIRE THROUGH WIREWAY TO CONTROL PANEL BREAKER FROM ATS CENTER POLE.
3. COORDINATE W/OWNER AND PROVIDE I/O SIGNALS TO EXISTING RTU AS REQUIRED. RTU MODIFICATIONS AND PROGRAMMING SHALL BE OWNER FURNISHED BY OWNER'S RTU CONTRACTOR.
4. 7.5KVA, 480:120/240V, 1ø, 4X CPT.

| 480V 3ø LOAD CALCULATION | |
|---|---|
| DESCRIPTION | AMPS |
| WELL PUMP (75HP) x 125% | 120 |
| CONTROLS & GEN. | 10 |
| TOTAL | 130 |
| EXISTING 480V 3ø SERVICE | 200A |

EXISTING SERVICE VOLTAGE DROP IS LESS THAN 2%
BRANCH CIRCUITS ARE LESS THAN 3% VOLTAGE DROP

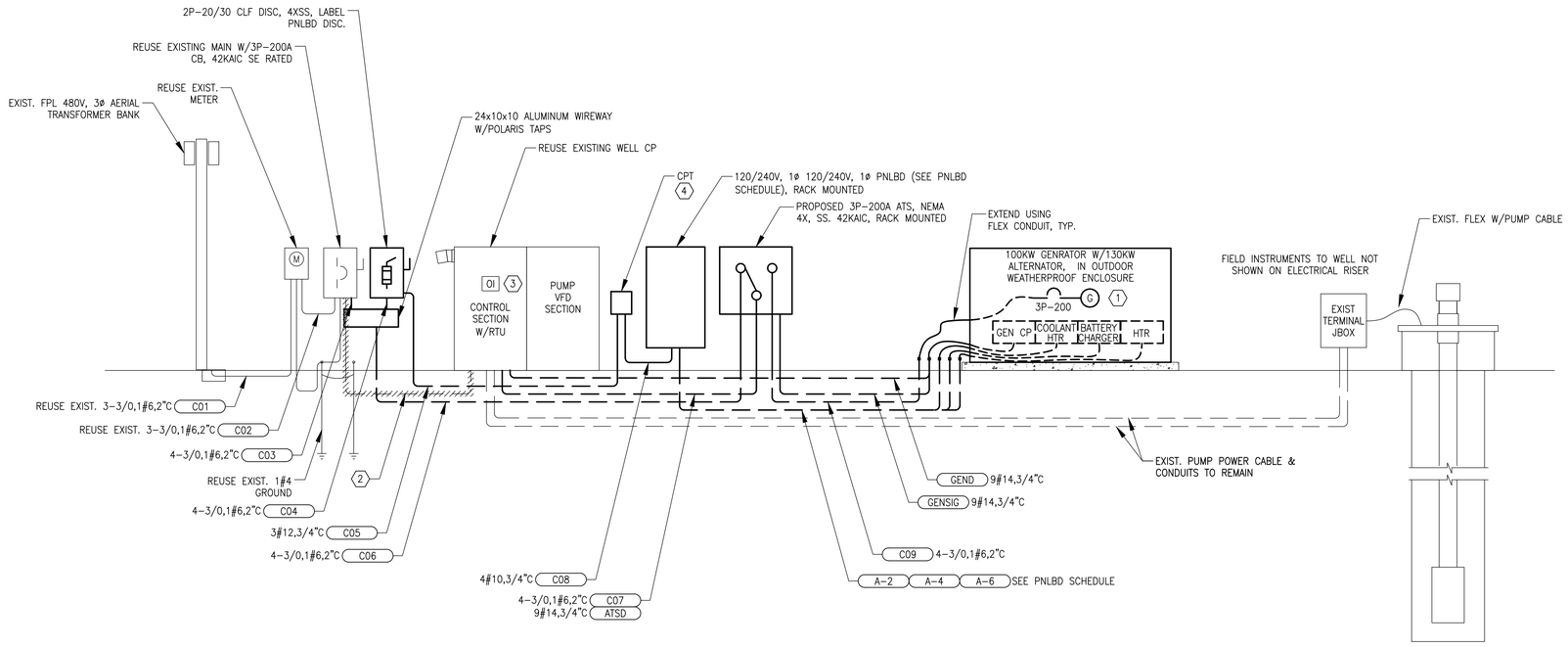


WELL NO.11 480V 3ø ELECTRICAL RISER DIAGRAM

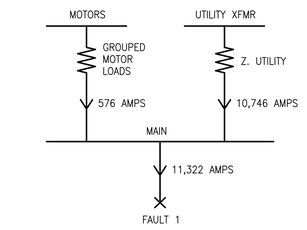


FAULT 1 = GROUPED MOTOR + UTILITY

GROUPED MOTOR LOADS = (1 @ 75HP) X 6.0

= (1 X 96A) X 6.0

= 576 AMPS

UTILITY = 10,746 AMPS

FAULT = 10,746 AMPS + 576 AMPS = 11,322 AMPS

FAULT CURRENT CALCULATION


C&W engineering
ELECTRICAL CONSULTANTS
2775 VISTA PARKWAY, SUITE G-6
WEST PALM BEACH, FL 33411
(561) 642-5333
REGISTRATION NUMBERS
C & W ENGINEERING INC. CA# 33315
MICHAEL A. GUIDA, P.E. 60755
56084


| DATE | BY | REVISIONS |
|---|---|---|
| | | |

Date: 04/30/2020
Scale: AS NOTED
Design By: JLR
Drawn By: AOD
Check By: MAG

VILLAGE OF PALM SPRINGS
EMERGENCY GENERATOR IMPROVEMENTS

WELL NO. 11
ELECTRICAL RISER DIAGRAM


HOLTZ CONSULTING ENGINEERS, INC.
HCE
270 SOUTH CENTRAL BLVD., SUITE 207
JUPITER, FLORIDA 33458
PH. (561) 575-2005
Cert. No. 26960


MICHAEL A. GUIDA
License No: 60755

E-6

Drawing Name: \\NEWSERVER-PC\Dropbox\VOBS\SP-Holtz Consulting former ( MA)\56084 VPS WELLS AND LIFT STATION GENERATOR ADDITION REHABILITATION\DRAWINGS\02 Electrical Details.dwg Layout Name: E-6 - Plotted by: Jaser - Date: 6/29/2020 - 1:00 PM - Holtz Consulting Engineers

## SPECIFIC ELECTRICAL NOTES

1. THE CONTRACTOR SHALL INSTALL ALL NEW EQUIPMENT WHILE OBSERVING NEC CLEARANCES.
2. DEMO EXISTING CONDUIT AND WIRES ABOVE GROUND BETWEEN MAIN AND LSCP. REPLACE PORTION OF CONDUIT AND WIRE THROUGH WIREWAY AND TO CONTROL PANEL BREAKER (FROM ATS CENTER POLE).
3. COORDINATE W/OWNER AND PROVIDE I/O SIGNALS TO EXISTING RTU AS REQUIRED. RTU MODIFICATIONS AND PROGRAMMING SHALL BE OWNER FURNISHED BY OWNER'S RTU CONTRACTOR.
4. 7.5KVA, 480:120/240V, 1ø, 4X CPT.

| 480V 3ø LOAD CALCULATION | |
|---|---|
| DESCRIPTION | AMPS |
| WELL PUMP (40HP) x 125% | 65 |
| CONTROLS & GEN. | 10 |
| TOTAL | 75 |
| EXISTING 480V 3ø SERVICE | 200A |

EXISTING SERVICE VOLTAGE DROP IS LESS THAN 2%
BRANCH CIRCUITS ARE LESS THAN 3% VOLTAGE DROP

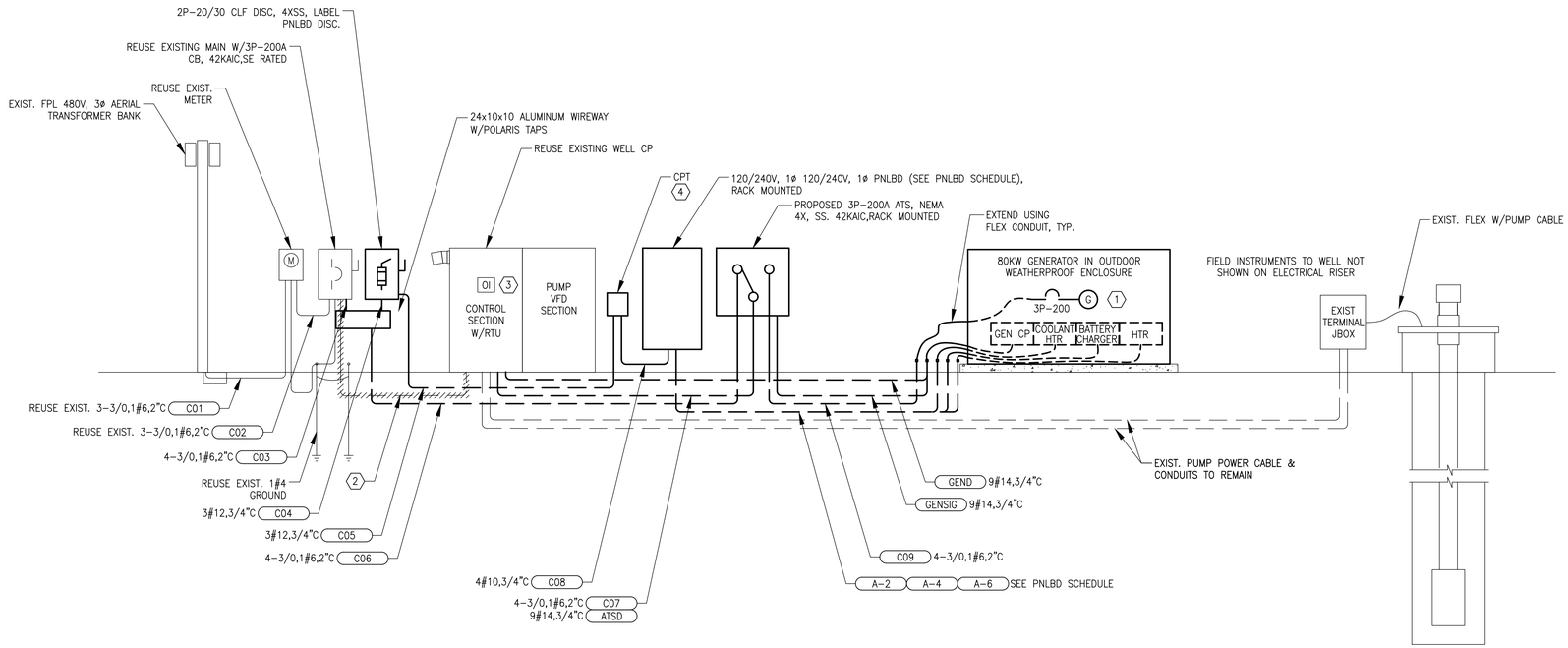


## WELL NO. 15 480V 3ø ELECTRICAL RISER DIAGRAM

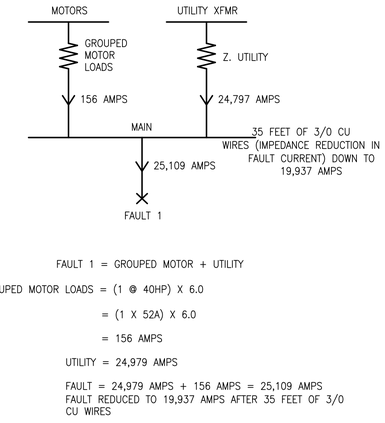


FAULT 1 = GROUPED MOTOR + UTILITY

GROUPED MOTOR LOADS = (1 @ 40HP) X 6.0

= (1 X 52A) X 6.0

= 156 AMPS

UTILITY = 24,979 AMPS

FAULT = 24,979 AMPS + 156 AMPS = 25,109 AMPS
FAULT REDUCED TO 19,937 AMPS AFTER 35 FEET OF 3/0 CU WIRES

## FAULT CURRENT CALCULATION


C&W engineering
ELECTRICAL CONSULTANTS
2775 VISTA PARKWAY, SUITE G-6
WEST PALM BEACH, FL 33411
(561) 642-5333
REGISTRATION NUMBERS
C & W ENGINEERING INC. CA# 33315
MICHAEL A. GUIDA, P.E. 60755
56084


| DATE | BY | REVISIONS |
|---|---|---|
| | | |

Date: 04/30/2020
Scale: AS NOTED
Design By: JLR
Drawn By: AOD
Check By: MAG

VILLAGE OF PALM SPRINGS
EMERGENCY GENERATOR IMPROVEMENTS

WELL NO. 15
ELECTRICAL RISER DIAGRAM


HOLTZ CONSULTING ENGINEERS, INC.
270 SOUTH CENTRAL BLVD., SUITE 207
JUPITER, FLORIDA 33458
PH. (561) 575-2005
Cert. No. 26960


MICHAEL A. GUIDA
License No: 60755

E-7


Drawing Name: \\NEWSERVER-PC\Dropbox\VOBS\SP-Holtz Consulting former ( MA)\56084 VPS WELLS AND LIFT STATION GENERATOR ADDITION REHABILITATION\DRAWINGS\02 Electrical Details.dwg Layout Name: E-7 - Plotted by: Joser - Date: 6/29/2020 - 1:00 PM - Holtz Consulting Engineers

## PANELBOARD A SCHEDULE (LS#9)

| COND SIZE | WIRE SIZE | BUS AMPS A | BUS AMPS B | LOAD | POLES | AMPS | BUS A B | AMPS | POLES | LOAD | BUS AMPS A | BUS AMPS B | WIRE SIZE | COND SIZE |
|---|---|---|---|---|---|---|---|---|---|---|---|---|---|---|
| | | | | | | | 1 2 | 20 | 1 | GENSET BATT. CHGR | 7 | | 3#12 | 3/4 |
| | | | | | | | 3 4 | 20 | 1 | GENSET SPACE HTR | | 2 | 3#12 | 3/4 |
| | | | | | | | 5 6 | 20 | 1 | GENSET COOLANT HTS | 12 | | 3#12 | 3/4 |
| | | | | | | | 7 8 | 20 | 1 | SPARE | | | | |
| | | | | | | | 9 10 | 20 | 1 | SPARE | | | | |
| | | | | | | | 11 12 | 20 | 1 | SPARE | | | | |
| | | | | | | | 13 14 | 20 | 1 | SPARE | | | | |
| | | | | | | | 15 16 | 20 | 1 | SPARE | | | | |
| | | | | | | | 17 18 | 20 | 1 | SPARE | | | | |
| | | | | | | | 19 20 | 20 | 1 | SPARE | | | | |

PANELBOARD SHALL BE NEMA 3R 316SS

| | | |
|---|---|---|
| RATED VOLTAGE: ■120/240 □277/480 1ø, 3 WIRE | BRANCH POLES: □12 ■20 □30 □42 | APPROVED MF'RS. CUTLER HAMMER, SQD ONLY |
| RATED AMPS: ■100 □225 □400 □____ | CABINET: ■ SURFACE □ FLUSH | NEMA □1 ■3R □4X |
| □ MAIN LUGS ONLY / MAIN 30 AMPS ■ BREAKER □ FUSED SWITCH | ■ HINGED DOOR | ■ KEYED DOOR LATCH |
| □ FUSED ■ CIRCUIT BREAKER (BOLT-IN) BRANCH DEVICES | □ _____ TO BE GFI BREAKERS | FULL NEUTRAL BUS / GROUND BUS |
| ALL BREAKERS MUST BE RATED TO INTERRUPT A SHORT CIRCUIT ISC OF 22,000 AMPS SYMMETRICAL. | | |

## PANELBOARD A SCHEDULE (WELL#11)

| COND SIZE | WIRE SIZE | BUS AMPS A | BUS AMPS B | LOAD | POLES | AMPS | BUS A B | AMPS | POLES | LOAD | BUS AMPS A | BUS AMPS B | WIRE SIZE | COND SIZE |
|---|---|---|---|---|---|---|---|---|---|---|---|---|---|---|
| | | | | | | | 1 2 | 20 | 1 | GENSET BATT. CHGR | 7 | | 3#12 | 3/4 |
| | | | | | | | 3 4 | 20 | 1 | GENSET SPACE HTR | | 2 | 3#12 | 3/4 |
| | | | | | | | 5 6 | 20 | 1 | GENSET COOLANT HTS | 12 | | 3#12 | 3/4 |
| | | | | | | | 7 8 | 20 | 1 | SPARE | | | | |
| | | | | | | | 9 10 | 20 | 1 | SPARE | | | | |
| | | | | | | | 11 12 | 20 | 1 | SPARE | | | | |
| | | | | | | | 13 14 | 20 | 1 | SPARE | | | | |
| | | | | | | | 15 16 | 20 | 1 | SPARE | | | | |
| | | | | | | | 17 18 | 20 | 1 | SPARE | | | | |
| | | | | | | | 19 20 | 20 | 1 | SPARE | | | | |

PANELBOARD SHALL BE NEMA 3R 316SS

| | | |
|---|---|---|
| RATED VOLTAGE: ■120/240 □277/480 1ø, 3 WIRE | BRANCH POLES: □12 ■20 □30 □42 | APPROVED MF'RS. CUTLER HAMMER, SQD ONLY |
| RATED AMPS: ■100 □225 □400 □____ | CABINET: ■ SURFACE □ FLUSH | NEMA □1 ■3R □4X |
| □ MAIN LUGS ONLY / MAIN 30 AMPS ■ BREAKER □ FUSED SWITCH | ■ HINGED DOOR | ■ KEYED DOOR LATCH |
| □ FUSED ■ CIRCUIT BREAKER (BOLT-IN) BRANCH DEVICES | □ _____ TO BE GFI BREAKERS | FULL NEUTRAL BUS / GROUND BUS |
| ALL BREAKERS MUST BE RATED TO INTERRUPT A SHORT CIRCUIT ISC OF 22,000 AMPS SYMMETRICAL. | | |

## PANELBOARD A SCHEDULE (WELL#15)

| COND SIZE | WIRE SIZE | BUS AMPS A | BUS AMPS B | LOAD | POLES | AMPS | BUS A B | AMPS | POLES | LOAD | BUS AMPS A | BUS AMPS B | WIRE SIZE | COND SIZE |
|---|---|---|---|---|---|---|---|---|---|---|---|---|---|---|
| | | | | | | | 1 2 | 20 | 1 | GENSET BATT. CHGR | 7 | | 3#12 | 3/4 |
| | | | | | | | 3 4 | 20 | 1 | GENSET SPACE HTR | | 2 | 3#12 | 3/4 |
| | | | | | | | 5 6 | 20 | 1 | GENSET COOLANT HTS | 12 | | 3#12 | 3/4 |
| | | | | | | | 7 8 | 20 | 1 | SPARE | | | | |
| | | | | | | | 9 10 | 20 | 1 | SPARE | | | | |
| | | | | | | | 11 12 | 20 | 1 | SPARE | | | | |
| | | | | | | | 13 14 | 20 | 1 | SPARE | | | | |
| | | | | | | | 15 16 | 20 | 1 | SPARE | | | | |
| | | | | | | | 17 18 | 20 | 1 | SPARE | | | | |
| | | | | | | | 19 20 | 20 | 1 | SPARE | | | | |

PANELBOARD SHALL BE NEMA 3R 316SS

| | | |
|---|---|---|
| RATED VOLTAGE: ■120/240 □277/480 1ø, 3 WIRE | BRANCH POLES: □12 ■20 □30 □42 | APPROVED MF'RS. CUTLER HAMMER, SQD ONLY |
| RATED AMPS: ■100 □225 □400 □____ | CABINET: ■ SURFACE □ FLUSH | NEMA □1 ■3R □4X |
| □ MAIN LUGS ONLY / MAIN 30 AMPS ■ BREAKER □ FUSED SWITCH | ■ HINGED DOOR | ■ KEYED DOOR LATCH |
| □ FUSED ■ CIRCUIT BREAKER (BOLT-IN) BRANCH DEVICES | □ _____ TO BE GFI BREAKERS | FULL NEUTRAL BUS / GROUND BUS |
| ALL BREAKERS MUST BE RATED TO INTERRUPT A SHORT CIRCUIT ISC OF 22,000 AMPS SYMMETRICAL. | | |


56084
C&W engineering
ELECTRICAL CONSULTANTS
2775 VISTA PARKWAY, SUITE G-6
WEST PALM BEACH, FL. 33411
(561) 642-5333
REGISTRATION NUMBERS
C & W ENGINEERING INC. CA# 33315
MICHAEL A. GUIDA, P.E. 60755


| DATE | BY | REVISIONS |
|---|---|---|
| | | |

Date: 04/30/2020
Scale: AS NOTED
Design By: JLR
Drawn By: AOD
Check By: MAG

VILLAGE OF PALM SPRINGS
EMERGENCY GENERATOR IMPROVEMENTS

PANELBOARD SCHEDULES


HOLTZ CONSULTING ENGINEERS, INC.
270 SOUTH CENTRAL BLVD., SUITE 207
JUPITER, FLORIDA 33458
PH. (561) 575-2005 Cert. No. 26960


MICHAEL A. GUIDA
License No: 60755

E-8


Drawing Name: \\NAVSERVER-PS\Dropbox\VOBS\38-Holtz Consulting former ( WL)\56084 VPS WELLS AND LIFT STATION GENERATOR ADDITION REHABILITATION\DRAWINGS\02 Electrical Details.dwg Layout Name: E-8 - Plotted by: Jose - Date: 6/30/2020 - 1:00 PM - Holtz Consulting Engineers

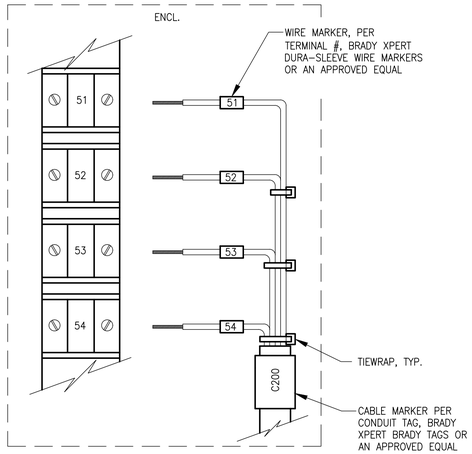


## TERMINATION EXAMPLE DETAIL

NTS

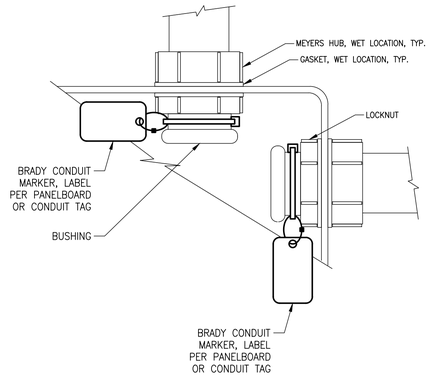


## CONDUIT TERMINATION DETAIL

NTS

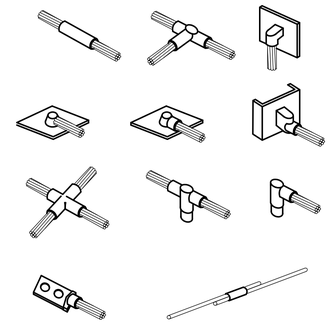

## CADWELD DETAILS

NTS

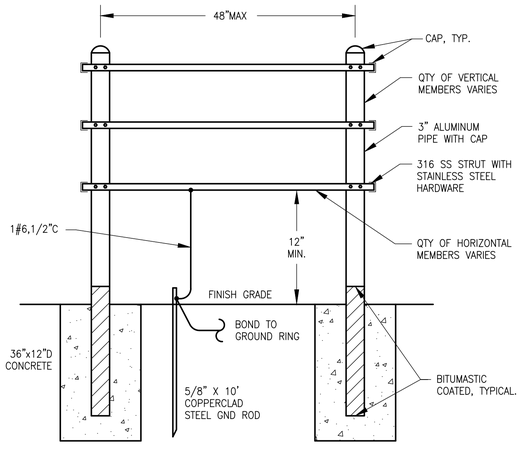


## PIPE STAND, CONCRETE MOUNT

A

NTS

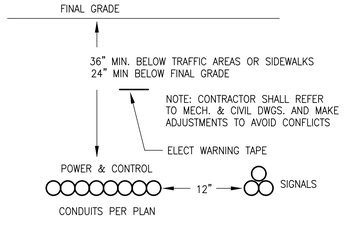


## DIRECT BURIED CONDUIT

NTS

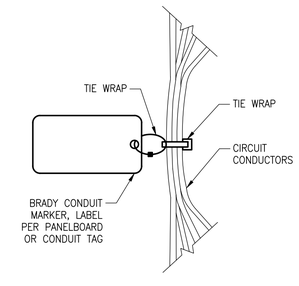


## CIRCUIT MARKER DETAIL

NTS

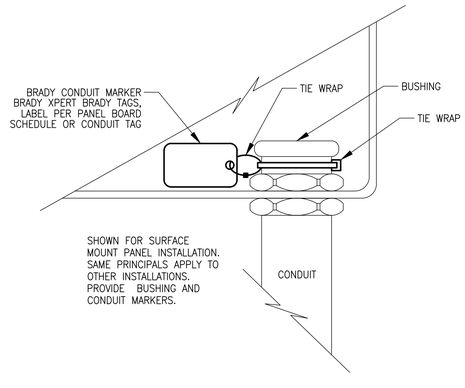


## CONDUIT DETAIL

NTS

C&W engineering
ELECTRICAL CONSULTANTS
2775 VISTA PARKWAY, SUITE G-6
WEST PALM BEACH, FL. 33411
(561) 642-5333
REGISTRATION NUMBERS
C & W ENGINEERING INC. CA# 33315
MICHAEL A. GUIDA, P.E. 60755
56084

| DATE | BY | REVISIONS |
|---|---|---|
| | | |

Date: 04/30/2020
Scale: AS NOTED
Design By: JLR
Drawn By: AOD
Check By: MAG

VILLAGE OF PALM SPRINGS
EMERGENCY GENERATOR IMPROVEMENTS

ELECTRICAL DETAILS

HOLTZ CONSULTING ENGINEERS, INC.
HCE
270 SOUTH CENTRAL BLVD., SUITE 207
JUPITER, FLORIDA 33458
PH. (561) 575-2005
Cert. No. 26960

MICHAEL A. GUIDA
License No: 60755

E-9

Drawing Name: \\NAS9LDRIVE-PS\Dropbox\VDBS\38-Holtz Consulting former ( WL)\38084 VPS WELLS AND LIFT STATION GENERATOR ADDITION REHABILITATION\DRAWINGS\02 Electrical Details.dwg Layout Name: E-9 - Plotted by: Joser - Date: 6/8/2020 - 1:00 PM - Holtz Consulting Engineers

# PROJECT SPECIFICATIONS

# FOR

# THE VILLAGE OF PALM SPRINGS

## Emergency Generator Improvements

**January 2021**

**Bid Number: 2021B-004**

**Prepared by:**

**Holtz Consulting Engineers, Inc.**
**270 South Central Blvd, Suite 207**
**Jupiter, Florida 33458**
**(561) 575-2005**

**BID DOCUMENT SET NO. _____**

# TABLE OF CONTENTS

**BIDDING AND CONTRACT REQUIREMENTS**


ADVERTISEMENT…..……..……..…….. 00111

INSTRUCTIONS TO BIDDERS…… 00200

BID SUBMISSION CHECKLIST…....……. 00400

BID FORM …....…… 00410

BID BOND…..……..00430

TABULATION OF SUBCONTRACTORS AND SUPPLIERS..……..00431

TRENCH SAFETY ACT CERTIFICATION……..… 00440

QUALIFICATION STATEMENT…….……... 00451

DISPUTES……..……... 00452

NONCOLLUSION AFFIDAVIT…… 00453

DRUG FREE WORKPLACE CERTIFICATION…… 00454

PUBLIC ENTITY CRIMES……... 00455

SCRUTINIZED COMPANIES CERTIFICATION ..……... 00456

NOTICE OF AWARD…..……... 00510

AGREEMENT……..…….. 00520

NOTICE TO PROCEED……..00550

PERFORMANCE BOND……00610

PAYMENT BOND……. 00615

CONTRACTORS APPLICATION FOR PAYMENT…… 00620

CERTIFICATION OF SUBSTANTIAL COMPLETION……...00625

GENERAL CONDITIONS…… 00700

SUPPLEMENTARY CONDITIONS…….……... 00800

WORK CHANGE DIRECTIVE.……... 00940

CHANGE ORDER…….…… 00941

FIELD ORDER……..……..00942

**TECHNICAL SPECIFICATIONS**

**DIVISION 1 - GENERAL REQUIREMENTS**

SUMMARY OF WORK……...01000

MEASUREMENT AND PAYMENT …….01025

COORDINATION AND MEETINGS…… 01039

SUBMITTALS…… 01300

PRE-CONSTRUCTION AUDIO-VIDEO DOCUMENTATION……...01360

QUALITY CONTROL……01400

CONSTRUCTION FACILITIES AND TEMPORARY CONTROLS……...01500

MATERIAL AND EQUIPMENT……... 01600

RECORD DOCUMENTS……01720

OPERATION & MAINTENANCE MANUALS……01730

GENERAL REQUIREMENTS……...01750

CONTRACT CLOSEOUT……...01780

EQUIPMENT TESTING AND FACILITY STARTUP……01810

**DIVISION 2 - SITEWORK**

EROSION, SEDIMENTATION, AND DUST CONTROL……... 02270

CHAIN LINK FENCE……02820

SODDING……02936

**DIVISION 3 – CONCRETE**

CONCRETE WORK……... 03700

**DIVISION 4 – MASONRY**

NOT USED

**DIVISION 5 – METALS**

NOT USED

**DIVISION 6 - WOOD AND PLASTICS**

NOT USED

**DIVISION 7 - THERMAL AND MOISTURE PROTECTION**

NOT USED

**DIVISION 8 - DOORS AND WINDOWS**

NOT USED

**DIVISION 9 - FINISHES**

NOT USED

**DIVISION 10 - SPECIALTIES**

NOT USED

**DIVISION 11 - EQUIPMENT**

NOT USED

**DIVISION 12 - FURNISHINGS**

NOT USED

**DIVISION 13 – SPECIAL CONSTRUCTION**

NOT USED

**DIVISION 14 - CONVEYING SYSTEMS**

NOT USED

**DIVISION 15 - MECHANICAL**

NOT USED

**DIVISION 16 – ELECTRICAL**

ELECTRICAL GENERAL REQUIREMENTS……..……... 16000

BASIC MATERIALS AND METHODS…….……...16050

GENERATOR…….....16203

AUTOMATIC TRANSFER SWITCH……... 16250

**APPENDICES**

NOT USED

**VILLAGE OF PALM SPRINGS**
**PALM SPRINGS, FL**
**ITB NO. 2021B-004**
**EMERGENCY GENERATOR IMPROVEMENTS**

ADVERTISEMENT FOR BIDS

Sealed Bids for the construction of the **Emergency Generator Improvements** Project will be received, by the **Village of Palm Springs**, at the office of the **Palm Springs Village Clerk**, until **2:00 PM** local time on **February 18, 2021**, at which time the Bids received will be publicly opened and read. The Project consists of constructing emergency generators, automatic transfer switches, and all other appurtenances necessary for a complete installation at Lift Station No. 9, Well No. 11, and Well No. 15.

Bidding Documents may be viewed and downloaded online www.vpsfl.org or www.demandstar.org. Hard copies of bidding Documents may be obtained from Holtz Consulting Engineers, Inc. on Mondays through Fridays between the hours of 8:00 AM and 5:00 PM. Bidding Documents are available on compact disc (as portable document format (PDF) files) for a non-refundable charge of $ 25.00 , including shipping via overnight express service. Alternatively, printed Bidding Documents may be obtained from Holtz Consulting Engineers, Inc. either via in-person pick-up or via mail, upon receipt of payment for the Bidding Documents. The non-refundable cost of printed Bidding Documents is $80.00 per set, payable to "Holtz Consulting Engineers, Inc.".

A virtual pre-bid conference will be held at **2:00 PM** local time on **January 27, 2021** via GoToMeeting. Attendance at the pre-bid conference **is not** mandatory.

Bid security shall be furnished in accordance with the Instructions to Bidders.

Any questions regarding the specifications and Solicitation process must be submitted in writing to the Village Clerk at kwynn@vpsfl.org, Questions and requests for clarification and additional information must be received prior to the Deadline for Submission of Questions on **February 5, 2021** AT 5:00 PM local time.

Pursuant to Section 2-355 of Palm Beach County Ordinance No. 2011-039, and the purchasing policies of the Village of Palm Springs, all Solicitations, once advertised, are under the "Cone of Silence" until the appropriate authority has approved an award recommendation, rejected all responses or some other action by the Village to end the selection process. This limits and requires documentation of communications between potential Bidders and/or Bidders on Village Solicitations, the Village's professional staff, and the Village Council members.

| | |
|---|---|
| Owner: | **Village of Palm Springs** |
| By: | **Kimberly Wynn** |
| Title: | **Village Clerk** |
| Date: | **January 21, 2021** |
| Publication: | Lake Worth Herald, Demandstar, and Village of Palm Springs website |

+ + END OF ADVERTISEMENT FOR BIDS + +

## INSTRUCTIONS TO BIDDERS

## TABLE OF CONTENTS


**Page**

Article 1 – Defined Terms ..... 1

Article 2 – Copies of Bidding Documents ..... 1

Article 3 – Qualifications of Bidders ..... 1

Article 4 – Site and Other Areas; Existing Site Conditions; Examination of Site; Owner's Safety Program; Other Work at the Site ..... 1

Article 5 – Bidder's Representations ..... 3

Article 6 – Pre-Bid Conference ..... 4

Article 7 – Interpretations and Addenda ..... 4

Article 8 – Bid Security ..... 4

Article 9 – Contract Times ..... 5

Article 10 – Liquidated Damages ..... 5

Article 11 – Substitute and "Or-Equal" Items ..... 5

Article 12 – Subcontractors, Suppliers, and Others ..... 5

Article 13 – Preparation of Bid ..... 6

Article 14 – Basis of Bid ..... 7

Article 15 – Submittal of Bid ..... 7

Article 16 – Modification and Withdrawal of Bid ..... 8

Article 17 – Opening of Bids ..... 8

Article 18 – Bids to Remain Subject to Acceptance ..... 8

Article 19 – Evaluation of Bids and Award of Contract ..... 8

Article 20 – Bonds and Insurance ..... 9

Article 21 – Signing of Agreement ..... 9

Article 22 – Sales and Use Taxes ..... 9




**Copyright © 2013 National Society of Professional Engineers, American Council of Engineering Companies, and American Society of Civil Engineers. All rights reserved.**

Copyright © 2013 National Society of Professional Engineers, American Council of Engineering Companies,
and American Society of Civil Engineers. All rights reserved. 

**ARTICLE 1 – DEFINED TERMS**

1.01 Terms used in these Instructions to Bidders have the meanings indicated in the General Conditions and Supplementary Conditions. Additional terms used in these Instructions to Bidders have the meanings indicated below:

A. *Issuing Office* – The office from which the Bidding Documents are to be issued.

**ARTICLE 2 – COPIES OF BIDDING DOCUMENTS**

2.01 Complete sets of the Bidding Documents may be obtained from the Issuing Office in the number and format stated in the advertisement or invitation to bid.

2.02 Complete sets of Bidding Documents shall be used in preparing Bids; neither Owner nor Engineer assumes any responsibility for errors or misinterpretations resulting from the use of incomplete sets of Bidding Documents.

2.03 Owner and Engineer, in making copies of Bidding Documents available on the above terms, do so only for the purpose of obtaining Bids for the Work and do not authorize or confer a license for any other use.

**ARTICLE 3 – QUALIFICATIONS OF BIDDERS**

3.01 To demonstrate Bidder's qualifications to perform the Work, Bidder shall submit with its Bid (a) written evidence establishing its qualifications such as financial data, previous experience, present commitments, and other such information as may be called for in Section 00451, and (b) the following additional information:

A. Evidence of Bidder's authority to do business in the State of Florida.

B. State of Florida contractor license number.

C. [Subcontractor and Supplier qualification information; coordinate with provisions of Article 12 of these Instructions, "Subcontractors, Suppliers, and Others."]

D. Provide a minimum of five (5) similar projects which have been completed within the past ten (10) years per Section 00315 - Bidder Qualifications Questionnaire, Article 12, including project description, final project cost, owner's name, address, and phone number. A similar project shall be defined as installation of an emergency generator with fuel tank and automatic transfer switch for a municipal or government facility in Florida.

3.02 A Bidder's failure to submit required qualification information within the times indicated may disqualify Bidder from receiving an award of the Contract.

3.03 No requirement in this Article 3 to submit information will prejudice the right of Owner to seek additional pertinent information regarding Bidder's qualifications.

3.04 Bidder is advised to carefully review those portions of the Bid Form requiring Bidder's representations and certifications.

**ARTICLE 4 – SITE AND OTHER AREAS; EXISTING SITE CONDITIONS; EXAMINATION OF SITE; OWNER'S SAFETY PROGRAM; OTHER WORK AT THE SITE**

4.01 *Site and Other Areas*

A. The Site is identified in the Bidding Documents. By definition, the Site includes rights-of-way, easements, and other lands furnished by Owner for the use of the Contractor. Any

additional lands required for temporary construction facilities, construction equipment, or storage of materials and equipment, and any access needed for such additional lands, are to be obtained and paid for by Contractor.

4.02 *Existing Site Conditions*

A. Subsurface and Physical Conditions; Hazardous Environmental Conditions

1. The Supplementary Conditions identify:

a. those reports known to Owner of explorations and tests of subsurface conditions at or adjacent to the Site, if any.

b. those drawings known to Owner of physical conditions relating to existing surface or subsurface structures at the Site (except Underground Facilities), if any.

2. Owner will make copies of reports and drawings referenced above available to any Bidder on request. These reports and drawings are not part of the Contract Documents, but the Technical Data contained therein upon whose accuracy Bidder is entitled to rely, as provided in the General Conditions, has been identified and established in the Supplementary Conditions. Bidder is responsible for any interpretation or conclusion Bidder draws from any Technical Data or any other data, interpretations, opinions, or information contained in such reports or shown or indicated in such drawings.

3. If the Supplementary Conditions do not identify Technical Data, the default definition of Technical Data set forth in Article 1 of the General Conditions will apply.

B. Underground Facilities: Information and data shown or indicated in the Bidding Documents with respect to existing Underground Facilities at or adjacent to the Site are set forth in the Contract Documents and are based upon information and data furnished to Owner and Engineer by owners of such Underground Facilities, including Owner, or others.

C. Adequacy of Data: Provisions concerning responsibilities for the adequacy of data furnished to prospective Bidders with respect to subsurface conditions, other physical conditions, and Underground Facilities, and possible changes in the Bidding Documents due to differing or unanticipated subsurface or physical conditions appear in Paragraphs 5.03, 5.04, and 5.05 of the General Conditions. Provisions concerning responsibilities for the adequacy of data furnished to prospective Bidders with respect to a Hazardous Environmental Condition at the Site, if any, and possible changes in the Contract Documents due to any Hazardous Environmental Condition uncovered or revealed at the Site which was not shown or indicated in the Drawings or Specifications or identified in the Contract Documents to be within the scope of the Work, appear in Paragraph 5.06 of the General Conditions.

*NOTE(S) TO USER:*

1. *The Technical Data upon which Bidder may rely should be identified in the Supplementary Conditions (see discussion in the Note following Paragraph 4.02 above, with respect to subsurface conditions, and in the Commentary, EJCDC® C-001).*

2. *In the event there are no data of the types referred to, it may be appropriate to revise the paragraphs above, and expressly state that there are no such data.*

4.03 *Site Visit and Testing by Bidders*

A. On request, the Owner will provide the Bidder access to the Site visit during normal working hours. Bidder shall not disturb any ongoing operations at the Site.

B. On request, and to the extent Owner has control over the Site, and schedule permitting, the Owner will provide Bidder access to the Site to conduct such additional examinations, investigations, explorations, tests, and studies as Bidder deems necessary for preparing and submitting a successful Bid. Owner will not have any obligation to grant such access if doing so is not practical because of existing operations, security or safety concerns, or restraints on Owner's authority regarding the Site.

C. Bidder shall comply with all applicable Laws and Regulations regarding excavation and location of utilities, obtain all permits, and comply with all terms and conditions established by Owner or by property owners or other entities controlling the Site with respect to schedule, access, existing operations, security, liability insurance, and applicable safety programs.

D. Bidder shall fill all holes and clean up and restore the Site to its former condition upon completion of such explorations, investigations, tests, and studies.

E. Bidder shall not disturb any ongoing operations at the Site.

**ARTICLE 5 – BIDDER'S REPRESENTATIONS**

5.01 It is the responsibility of each Bidder before submitting a Bid to:

A. examine and carefully study the Bidding Documents, and any data and reference items identified in the Bidding Documents;

B. visit the Site, conduct a thorough, alert visual examination of the Site and adjacent areas, and become familiar with and satisfy itself as to the general, local, and Site conditions that may affect cost, progress, and performance of the Work;

C. become familiar with and satisfy itself as to all Laws and Regulations that may affect cost, progress, and performance of the Work;

D. carefully study all: (1) reports of explorations and tests of subsurface conditions at or adjacent to the Site and all drawings of physical conditions relating to existing surface or subsurface structures at the Site that have been identified in the Supplementary Conditions, especially with respect to Technical Data in such reports and drawings, and (2) reports and drawings relating to Hazardous Environmental Conditions, if any, at or adjacent to the Site that have been identified in the Supplementary Conditions, especially with respect to Technical Data in such reports and drawings;

E. consider the information known to Bidder itself; information commonly known to contractors doing business in the locality of the Site; information and observations obtained from visits to the Site; the Bidding Documents; and the Site-related reports and drawings identified in the Bidding Documents, with respect to the effect of such information, observations, and documents on (1) the cost, progress, and performance of the Work; (2) the means, methods, techniques, sequences, and procedures of construction to be employed by Bidder; and (3) Bidder's safety precautions and programs;

F. agree, based on the information and observations referred to in the preceding paragraph, that at the time of submitting its Bid no further examinations, investigations, explorations, tests, studies, or data are necessary for the determination of its Bid for performance of the

Work at the price bid and within the times required, and in accordance with the other terms and conditions of the Bidding Documents;

G. become aware of the general nature of the work to be performed by Owner and others at the Site that relates to the Work as indicated in the Bidding Documents;

H. promptly give Engineer written notice of all conflicts, errors, ambiguities, or discrepancies that Bidder discovers in the Bidding Documents and confirm that the written resolution thereof by Engineer is acceptable to Bidder;

I. determine that the Bidding Documents are generally sufficient to indicate and convey understanding of all terms and conditions for the performance and furnishing of the Work; and

J. agree that the submission of a Bid will constitute an incontrovertible representation by Bidder that Bidder has complied with every requirement of this Article, that without exception the Bid and all prices in the Bid are premised upon performing and furnishing the Work required by the Bidding Documents.

**ARTICLE 6 – PRE-BID CONFERENCE**

6.01 A pre-Bid conference will be held at the time and location stated in the invitation or advertisement to bid. Representatives of Owner and Engineer will be present to discuss the Project. Bidders are encouraged to attend and participate in the conference. Owner will transmit to all prospective Bidders of record such Addenda as Owner and Engineer considers necessary in response to questions arising at the conference. Oral statements may not be relied upon and will not be binding or legally effective.

**ARTICLE 7 – INTERPRETATIONS AND ADDENDA**

7.01 All questions about the meaning or intent of the Bidding Documents are to be submitted to Owner in writing to the email address stated in the invitation or advertisement to bid. Interpretations or clarifications considered necessary by Owner or Engineer in response to such questions will be issued by Addenda delivered to all parties recorded as having received the Bidding Documents. Questions received less than seven days prior to the date for opening of Bids may not be answered. Only questions answered by Addenda will be binding. Oral and other interpretations or clarifications will be without legal effect.

7.02 Addenda may be issued to clarify, correct, supplement, or change the Bidding Documents.

**ARTICLE 8 – BID SECURITY**

8.01 A Bid must be accompanied by Bid security made payable to Owner in an amount of 5 percent of Bidder's maximum Bid price (determined by adding the base bid and all alternates) and in the form of a certified check, bank money order, or a Bid bond (on the form included in the Bidding Documents) issued by a surety meeting the requirements of Paragraphs 6.01 and 6.02 of the General Conditions.

8.02 The Bid security of the apparent Successful Bidder will be retained until Owner awards the contract to such Bidder, and such Bidder has executed the Contract Documents, furnished the required contract security, and met the other conditions of the Notice of Award, whereupon the Bid security will be released. If the Successful Bidder fails to execute and deliver the Contract Documents and furnish the required contract security within 15 days after the Notice of Award, Owner may consider Bidder to be in default, annul the Notice of Award, and the Bid security of

that Bidder will be forfeited. Such forfeiture shall be Owner's exclusive remedy if Bidder defaults.

8.03 The Bid security of other Bidders that Owner believes to have a reasonable chance of receiving the award may be retained by Owner until the earlier of seven days after the Effective Date of the Contract or 121 days after the Bid opening, whereupon Bid security furnished by such Bidders will be released.

8.04 Bid security of other Bidders that Owner believes do not have a reasonable chance of receiving the award will be released within seven days after the Bid opening.

**ARTICLE 9 – CONTRACT TIMES**

9.01 The number of days within which, or the dates by which, the Work is to be substantially completed, and completed and ready for final payment, are set forth in the Agreement.

**ARTICLE 10 – LIQUIDATED DAMAGES**

10.01 Provisions for liquidated damages, if any, for failure to timely attain a Milestone, Substantial Completion, or completion of the Work in readiness for final payment, are set forth in the Agreement.

**ARTICLE 11 – SUBSTITUTE AND "OR-EQUAL" ITEMS**

11.01 The Contract for the Work, as awarded, will be on the basis of materials and equipment specified or described in the Bidding Documents, and those "or-equal" or substitute or materials and equipment subsequently approved by Engineer prior to the submittal of Bids and identified by Addendum. No item of material or equipment will be considered by Engineer as an "or-equal" or substitute unless written request for approval has been submitted by Bidder and has been received by Engineer at least 15 days prior to the date for receipt of Bids. Each such request shall comply with the requirements of Paragraphs 7.04 and 7.05 of the General Conditions. The burden of proof of the merit of the proposed item is upon Bidder. Engineer's decision of approval or disapproval of a proposed item will be final. If Engineer approves any such proposed item, such approval will be set forth in an Addendum issued to all prospective Bidders. Bidders shall not rely upon approvals made in any other manner.

11.02 All prices that Bidder sets forth in its Bid shall be based on the presumption that the Contractor will furnish the materials and equipment specified or described in the Bidding Documents, as supplemented by Addenda. Any assumptions regarding the possibility of post-Bid approvals of "or-equal" or substitution requests are made at Bidder's sole risk.

**ARTICLE 12 – SUBCONTRACTORS, SUPPLIERS, AND OTHERS**

12.01 A Bidder shall be prepared to retain specific Subcontractors, Suppliers, or other individuals or entities for the performance of the Work if required by the Bidding Documents (most commonly in the Specifications) to do so. If a prospective Bidder objects to retaining any such Subcontractor, Supplier, or other individual or entity, and the concern is not relieved by an Addendum, then the prospective Bidder should refrain from submitting a Bid.

12.02 Subsequent to the submittal of the Bid, Owner may not require the Successful Bidder or Contractor to retain any Subcontractor, Supplier, or other individual or entity against which Contractor has reasonable objection.

12.03 Unless otherwise required to be submitted with the Bid, the apparent Successful Bidder, and any other Bidder so requested, shall within five days after Bid opening, submit to Owner a list of the Subcontractors or Suppliers for which such identification is required

Such list shall be accompanied by an experience statement with pertinent information regarding similar projects and other evidence of qualification for each such Subcontractor, Supplier, or other individual or entity. If Owner or Engineer, after due investigation, has reasonable objection to any proposed Subcontractor, Supplier, individual, or entity, Owner may, before the Notice of Award is given, request apparent Successful Bidder to submit an acceptable substitute, in which case apparent Successful Bidder shall submit a substitute, Bidder's Bid price will be increased (or decreased) by the difference in cost occasioned by such substitution, and Owner may consider such price adjustment in evaluating Bids and making the Contract award.

12.04 If apparent Successful Bidder declines to make any such substitution, Owner may award the Contract to the next lowest Bidder that proposes to use acceptable Subcontractors, Suppliers, or other individuals or entities. Declining to make requested substitutions will constitute grounds for forfeiture of the Bid security of any Bidder. Any Subcontractor, Supplier, individual, or entity so listed and against which Owner or Engineer makes no written objection prior to the giving of the Notice of Award will be deemed acceptable to Owner and Engineer subject to subsequent revocation of such acceptance as provided in Paragraph 7.06 of the General Conditions.

**ARTICLE 13 – PREPARATION OF BID**

13.01 The Bid Form is included with the Bidding Documents.

A. All blanks on the Bid Form shall be completed in ink and the Bid Form signed in ink. Erasures or alterations shall be initialed in ink by the person signing the Bid Form. A Bid price shall be indicated for each section, Bid item, alternate, adjustment unit price item, and unit price item listed therein.

B. If the Bid Form expressly indicates that submitting pricing on a specific alternate item is optional, and Bidder elects to not furnish pricing for such optional alternate item, then Bidder may enter the words "No Bid" or "Not Applicable."

13.02 A Bid by a corporation shall be executed in the corporate name by a corporate officer (whose title must appear under the signature), accompanied by evidence of authority to sign. The corporate address and state of incorporation shall be shown.

13.03 A Bid by a partnership shall be executed in the partnership name and signed by a partner (whose title must appear under the signature), accompanied by evidence of authority to sign. The partnership's address for receiving notices shall be shown.

13.04 A Bid by a limited liability company shall be executed in the name of the firm by a member or other authorized person and accompanied by evidence of authority to sign. The state of formation of the firm and the firm's address for receiving notices shall be shown.

13.05 A Bid by an individual shall show the Bidder's name and address for receiving notices.

13.06 A Bid by a joint venture shall be executed by an authorized representative of each joint venturer in the manner indicated on the Bid Form. The joint venture's address for receiving notices shall be shown.

13.07 All names shall be printed in ink below the signatures.

13.08 The Bid shall contain an acknowledgment of receipt of all Addenda, the numbers of which shall be filled in on the Bid Form.

13.09 Postal and e-mail addresses and telephone number for communications regarding the Bid shall be shown.

13.10 The Bid shall contain evidence of Bidder's authority and qualification to do business in the state where the Project is located, or Bidder shall covenant in writing to obtain such authority and qualification prior to award of the Contract and attach such covenant to the Bid. Bidder's state contractor license number, if any, shall also be shown on the Bid Form.

**ARTICLE 14 – BASIS OF BID**

14.01 *Lump Sum*

A. Bidders shall submit a Bid on a lump sum basis as set forth in the Bid Form.

14.02 *Unit Price*

A. Bidders shall submit a Bid on a unit price basis for each item of Work listed in the unit price section of the Bid Form.

B. The "Bid Price" (sometimes referred to as the extended price) for each unit price Bid item will be the product of the "Estimated Quantity" (which Owner or its representative has set forth in the Bid Form) for the item and the corresponding "Bid Unit Price" offered by the Bidder. The total of all unit price Bid items will be the sum of these "Bid Prices"; such total will be used by Owner for Bid comparison purposes. The final quantities and Contract Price will be determined in accordance with Paragraph 13.03 of the General Conditions.

C. Discrepancies between the multiplication of units of Work and unit prices will be resolved in favor of the unit prices. Discrepancies between the indicated sum of any column of figures and the correct sum thereof will be resolved in favor of the correct sum.

14.03 *Allowances*

A. For cash allowances the Bid price shall include such amounts as the Bidder deems proper for Contractor's overhead, costs, profit, and other expenses on account of cash allowances, if any, named in the Contract Documents, in accordance with Paragraph 13.02.B of the General Conditions.

**ARTICLE 15 – SUBMITTAL OF BID**

15.01 With each copy of the Bidding Documents, a Bidder is furnished one separate unbound copy of the Bid Form, and, if required, the Bid Bond Form. The unbound copy of the Bid Form is to be completed and submitted with the Bid security and the other documents required to be submitted under the terms of Article 7 of the Bid Form.

15.02 A Bid shall be received no later than the date and time prescribed and at the place indicated in the advertisement or invitation to bid and shall be enclosed in a plainly marked package with the Project title (and, if applicable, the designated portion of the Project for which the Bid is submitted), the name and address of Bidder, and shall be accompanied by the Bid security and other required documents. If a Bid is sent by mail or other delivery system, the sealed envelope containing the Bid shall be enclosed in a separate package plainly marked on the outside with the notation "BID ENCLOSED." A mailed Bid shall be addressed to 226 Cypress Lane, Palm Springs, FL 33461.

15.03 Bids received after the date and time prescribed for the opening of bids, or not submitted at the correct location or in the designated manner, will not be accepted and will be returned to the Bidder unopened.

15.04 The following documents shall be submitted with and made a part of the Bid:

Section 00430 Bid Bond
Section 00431 Tabulation of Subcontractor and Suppliers
Section 00440 Florida Trench Safety Act Certification
Section 00451 Qualifications Statement
Section 00452 Bidder's Statement of Disputes, Litigation, Arbitration, and Surety Completion
Section 00453 Noncollusion Affidavit
Section 00454 Drug-Free Workplace Certificate
Section 00455 Sworn Statement on Public Entity Crimes

**ARTICLE 16 – MODIFICATION AND WITHDRAWAL OF BID**

16.01 A Bid may be withdrawn by an appropriate document duly executed in the same manner that a Bid must be executed and delivered to the place where Bids are to be submitted prior to the date and time for the opening of Bids. Upon receipt of such notice, the unopened Bid will be returned to the Bidder.

16.02 If a Bidder wishes to modify its Bid prior to Bid opening, Bidder must withdraw its initial Bid in the manner specified in Paragraph 16.01 and submit a new Bid prior to the date and time for the opening of Bids.

16.03 If within 24 hours after Bids are opened any Bidder files a duly signed written notice with Owner and promptly thereafter demonstrates to the reasonable satisfaction of Owner that there was a material and substantial mistake in the preparation of its Bid, that Bidder may withdraw its Bid, and the Bid security will be returned. Thereafter, if the Work is rebid, that Bidder will be disqualified from further bidding on the Work.

**ARTICLE 17 – OPENING OF BIDS**

17.01 Bids will be opened at the time and place indicated in the advertisement or invitation to bid and, unless obviously non-responsive, read aloud publicly. An abstract of the amounts of the base Bids and major alternates, if any, will be made available to Bidders after the opening of Bids.

**ARTICLE 18 – BIDS TO REMAIN SUBJECT TO ACCEPTANCE**

18.01 All Bids will remain subject to acceptance for the period of time stated in the Bid Form, but Owner may, in its sole discretion, release any Bid and return the Bid security prior to the end of this period.

**ARTICLE 19 – EVALUATION OF BIDS AND AWARD OF CONTRACT**

19.01 Owner reserves the right to reject any or all Bids, including without limitation, nonconforming, nonresponsive, unbalanced, or conditional Bids. Owner will reject the Bid of any Bidder that Owner finds, after reasonable inquiry and evaluation, to not be responsible. If Bidder purports to add terms or conditions to its Bid, takes exception to any provision of the Bidding Documents, or attempts to alter the contents of the Contract Documents for purposes of the Bid, then the Owner will reject the Bid as nonresponsive; provided that Owner also reserves the right to waive all minor informalities not involving price, time, or changes in the Work.

19.02 If Owner awards the contract for the Work, such award shall be to the responsible Bidder submitting the lowest responsive Bid.

19.03 Evaluation of Bids

A. In evaluating Bids, Owner will consider whether or not the Bids comply with the prescribed requirements, and such alternates, unit prices, and other data, as may be requested in the Bid Form or prior to the Notice of Award.

B. In the comparison of Bids, alternates will be applied in the same order of priority as listed in the Bid Form. To determine the Bid prices for purposes of comparison, Owner shall announce to all bidders a "Base Bid plus alternates" budget after receiving all Bids, but prior to opening them. For comparison purposes alternates will be accepted, following the order of priority established in the Bid Form, until doing so would cause the budget to be exceeded. After determination of the Successful Bidder based on this comparative process and on the responsiveness, responsibility, and other factors set forth in these Instructions, the award may be made to said Successful Bidder on its base Bid and any combination of its additive alternate Bids for which Owner determines funds will be available at the time of award.

19.04 In evaluating whether a Bidder is responsible, Owner will consider the qualifications of the Bidder and may consider the qualifications and experience of Subcontractors and Suppliers proposed for those portions of the Work for which the identity of Subcontractors and Suppliers must be submitted as provided in the Bidding Documents.

19.05 Owner may conduct such investigations as Owner deems necessary to establish the responsibility, qualifications, and financial ability of Bidders and any proposed Subcontractors or Suppliers.

**ARTICLE 20 – BONDS AND INSURANCE**

20.01 Article 6 of the General Conditions, as may be modified by the Supplementary Conditions, sets forth Owner's requirements as to performance and payment bonds and insurance. When the Successful Bidder delivers the Agreement (executed by Successful Bidder) to Owner, it shall be accompanied by required bonds and insurance documentation.

**ARTICLE 21 – SIGNING OF AGREEMENT**

21.01 When Owner issues a Notice of Award to the Successful Bidder, it shall be accompanied by the unexecuted counterparts of the Agreement along with the other Contract Documents as identified in the Agreement. Within 15 days thereafter, Successful Bidder shall execute and deliver the required number of counterparts of the Agreement (and any bonds and insurance documentation required to be delivered by the Contract Documents) to Owner. Within ten days thereafter, Owner shall deliver one fully executed counterpart of the Agreement to Successful Bidder, together with printed and electronic copies of the Contract Documents as stated in Paragraph 2.02 of the General Conditions.

**ARTICLE 22 – SALES AND USE TAXES**

22.01 Owner is exempt from Florida state sales and use taxes on materials and equipment to be incorporated in the Work. Said taxes shall not be included in the Bid. Refer to Paragraph SC-7.09 of the Supplementary Conditions for additional information.

SECTION 00400

BID SUBMISSION CHECKLIST

Project Name: Emergency Generator Improvements

Bid Number: 2021B-004

Bidders Name: _____

The following items must be submitted in the following order with your bid:

1. __ Completed Section 00400 - Bid Submission Checklist
2. __ Completed Section 00410 - Bid Form
3. __ Completed Section 00430 - Bid Bond, complete with Power of Attorney
4. __ Completed Section 00431 - Tabulation of Subcontractor and Suppliers
5. __ Completed Section 00440 - Florida Trench Safety Act Certification
6. __ Completed Section 00451 - Qualifications Statement
7. __ Completed Section 00452 - Bidder's Statement of Disputes, Litigation, Arbitration, and Surety Completion
8. __ Completed Section 00453 - Non-Collusive Affidavit
9. __ Completed Section 00454 - Drug-Free Workplace Certificate
10. __ Completed Section 00455 - Sworn Statement on Public Entity Crimes
11. __ Completed Section 00456 – Scrutinized Companies
12. __ Current Insurance Certificate showing that bidder can meet the insurance requirements per Section 10.10 of the Contract Agreement, Section 6.03 of the General Conditions.

Submit one (1) original and two (2) copies of all documents listed above. Original shall be clearly marked "Original".

Failure to provide the above listed items may result in your bid being deemed non-responsive.

# BID FORM

## ARTICLE 1 – BID RECIPIENT

1.01 This Bid is submitted to:

***VILLAGE OF PALM SPRINGS***

***C/O Kimberly Wynn, Village Clerk***

***226 Cypress Lane, Palm Springs, FL 33461***

1.02 The undersigned Bidder proposes and agrees, if this Bid is accepted, to enter into an Agreement with Owner in the form included in the Bidding Documents to perform all Work as specified or indicated in the Bidding Documents for the prices and within the times indicated in this Bid and in accordance with the other terms and conditions of the Bidding Documents.

## ARTICLE 2 – BIDDER'S ACKNOWLEDGEMENTS

2.01 Bidder accepts all of the terms and conditions of the Instructions to Bidders, including without limitation those dealing with the disposition of Bid security. This Bid will remain subject to acceptance for 120 days after the Bid opening, or for such longer period of time that Bidder may agree to in writing upon request of Owner.

## ARTICLE 3 – BIDDER'S REPRESENTATIONS

3.01 In submitting this Bid, Bidder represents that:

A. Bidder has examined and carefully studied the Bidding Documents, and any data and reference items identified in the Bidding Documents, and hereby acknowledges receipt of the following Addenda:

| **Addendum No.** | **Addendum, Date** |
|---|---|
| _____ | _____ |
| _____ | _____ |
| _____ | _____ |
| _____ | _____ |

B. Bidder has visited the Site, conducted a thorough, alert visual examination of the Site and adjacent areas, and become familiar with and satisfied itself as to the general, local, and Site conditions that may affect cost, progress, and performance of the Work.

C. Bidder is familiar with and has satisfied itself as to all Laws and Regulations that may affect cost, progress, and performance of the Work.

D. Bidder has considered the information known to Bidder itself; information commonly known to contractors doing business in the locality of the Site; information and observations obtained from visits to the Site; the Bidding Documents; and any Site-related reports and drawings identified in the Bidding Documents, with respect to the effect of such information, observations, and documents on (1) the cost, progress, and performance of the Work; (2) the means, methods, techniques, sequences, and procedures of construction to be employed by Bidder; and (3) Bidder's safety precautions and programs.

E. Bidder agrees, based on the information and observations referred to in the preceding paragraph, that no further examinations, investigations, explorations, tests, studies, or data are necessary for the determination of this Bid for performance of the Work at the price bid and within the times required, and in accordance with the other terms and conditions of the Bidding Documents.

F. Bidder is aware of the general nature of work to be performed by Owner and others at the Site that relates to the Work as indicated in the Bidding Documents.

G. Bidder has given Engineer written notice of all conflicts, errors, ambiguities, or discrepancies that Bidder has discovered in the Bidding Documents, and confirms that the written resolution thereof by Engineer is acceptable to Bidder.

H. The Bidding Documents are generally sufficient to indicate and convey understanding of all terms and conditions for the performance and furnishing of the Work.

I. The submission of this Bid constitutes an incontrovertible representation by Bidder that Bidder has complied with every requirement of this Article, and that without exception the Bid and all prices in the Bid are premised upon performing and furnishing the Work required by the Bidding Documents.

**ARTICLE 4 – BIDDER'S CERTIFICATION**

4.01 Bidder certifies that:

A. This Bid is genuine and not made in the interest of or on behalf of any undisclosed individual or entity and is not submitted in conformity with any collusive agreement or rules of any group, association, organization, or corporation;

B. Bidder has not directly or indirectly induced or solicited any other Bidder to submit a false or sham Bid;

C. Bidder has not solicited or induced any individual or entity to refrain from bidding; and

D. Bidder has not engaged in corrupt, fraudulent, collusive, or coercive practices in competing for the Contract. For the purposes of this Paragraph 4.01.D:

1. "corrupt practice" means the offering, giving, receiving, or soliciting of any thing of value likely to influence the action of a public official in the bidding process;

2. "fraudulent practice" means an intentional misrepresentation of facts made (a) to influence the bidding process to the detriment of Owner, (b) to establish bid prices at artificial non-competitive levels, or (c) to deprive Owner of the benefits of free and open competition;

3. "collusive practice" means a scheme or arrangement between two or more Bidders, with or without the knowledge of Owner, a purpose of which is to establish bid prices at artificial, non-competitive levels; and

4. "coercive practice" means harming or threatening to harm, directly or indirectly, persons or their property to influence their participation in the bidding process or affect the e execution of the Contract.

**ARTICLE 5 – BASIS OF BID**

5.01 Bidder will complete the Work in accordance with the Contract Documents for the following price(s):

**UNIT PRICE BID**

| Item No. | Description | Unit | Estimated Quantity | Bid Unit Price | Bid Price |
|---|---|---|---|---|---|
| 1 | General Conditions | Lump Sum | 1 | | |
| 2 | Lift Station No. 9 Improvements | Lump Sum | 1 | | |
| 3 | Well No. 11 Improvements | Lump Sum | 1 | | |
| 4 | Well No. 15 Improvements | Lump Sum | 1 | | |
| **Total of All Unit Price Bid Items** | | | | | $ |

Bidder acknowledges that (1) each Bid Unit Price includes an amount considered by Bidder to be adequate to cover Contractor's overhead and profit for each separately identified item, and (2) estimated quantities are not guaranteed, and are solely for the purpose of comparison of Bids, and final payment for all unit price Bid items will be based on actual quantities, determined as provided in the Contract Documents.

**Total Bid Price (written)**

**ARTICLE 6 – TIME OF COMPLETION**

6.01 Bidder agrees that the Work will be substantially complete within 210 calendar days after the date when the Contract Times commence to run as provided in Paragraph 4.01 of the General Conditions, and will be completed and ready for final payment in accordance with Paragraph 15.06 of the General Conditions within 240 calendar days after the date when the Contract Times commence to run.

6.02 Bidder accepts the provisions of the Agreement as to liquidated damages.

**ARTICLE 7 – ATTACHMENTS TO THIS BID**

7.01 The following documents are submitted with and made a condition of this Bid:

A. Required Bid security;

B. List of Proposed Subcontractors;

C. List of Proposed Suppliers;

D. List of Project References;

E. Evidence of authority to do business in the state of the Project; or a written covenant to obtain such license within the time for acceptance of Bids;

F. Contractor's License No.: _____ **[or]** Evidence of Bidder's ability to obtain a State Contractor's License and a covenant by Bidder to obtain said license within the time for acceptance of Bids;

G. Required Bidder Qualification Statement with supporting data; and

**ARTICLE 8 – DEFINED TERMS**

8.01 The terms used in this Bid with initial capital letters have the meanings stated in the Instructions to Bidders, the General Conditions, and the Supplementary Conditions.

**ARTICLE 9 – BID SUBMITTAL**

BIDDER: *[Indicate correct name of bidding entity]*

_____

By:
*[Signature]* _____

*[Printed name]* _____
*(If Bidder is a corporation, a limited liability company, a partnership, or a joint venture, attach evidence of authority to sign.)*

Attest:
*[Signature]* _____

*[Printed name]* _____

Title: _____

Submittal Date: _____

Address for giving notices:

_____

_____

_____

Telephone Number: _____

Fax Number: _____

Contact Name and e-mail address: _____

_____

Bidder's License No.: _____
*(where applicable)*

# BID BOND

Any singular reference to Bidder, Surety, Owner or other party shall be considered plural where applicable.

BIDDER *(Name and Address)*:

SURETY *(Name, and Address of Principal Place of Business)*:

OWNER *(Name and Address)*:

BID

Bid Due Date:

Description *(Project Name— Include Location)*:

BOND

Bond Number:

Date:

Penal sum _____ $ _____

(Words) (Figures)

Surety and Bidder, intending to be legally bound hereby, subject to the terms set forth below, do each cause this Bid Bond to be duly executed by an authorized officer, agent, or representative.

| **BIDDER** | **SURETY** |
|---|---|
| _____ (Seal) | _____ (Seal) |
| Bidder's Name and Corporate Seal | Surety's Name and Corporate Seal |
| By: _____ | By: _____ |
| Signature | Signature (Attach Power of Attorney) |
| _____ | _____ |
| Print Name | Print Name |
| _____ | _____ |
| Title | Title |
| Attest: _____ | Attest: _____ |
| Signature | Signature |
| Title | Title |

*Note: Addresses are to be used for giving any required notice.*
*Provide execution by any additional parties, such as joint venturers, if necessary.*

1. Bidder and Surety, jointly and severally, bind themselves, their heirs, executors, administrators, successors, and assigns to pay to Owner upon default of Bidder the penal sum set forth on the face of this Bond. Payment of the penal sum is the extent of Bidder's and Surety's liability. Recovery of such penal sum under the terms of this Bond shall be Owner's sole and exclusive remedy upon default of Bidder.

2. Default of Bidder shall occur upon the failure of Bidder to deliver within the time required by the Bidding Documents (or any extension thereof agreed to in writing by Owner) the executed Agreement required by the Bidding Documents and any performance and payment bonds required by the Bidding Documents.

3. This obligation shall be null and void if:

3.1 Owner accepts Bidder's Bid and Bidder delivers within the time required by the Bidding Documents (or any extension thereof agreed to in writing by Owner) the executed Agreement required by the Bidding Documents and any performance and payment bonds required by the Bidding Documents, or

3.2 All Bids are rejected by Owner, or

3.3 Owner fails to issue a Notice of Award to Bidder within the time specified in the Bidding Documents (or any extension thereof agreed to in writing by Bidder and, if applicable, consented to by Surety when required by Paragraph 5 hereof).

4. Payment under this Bond will be due and payable upon default of Bidder and within 30 calendar days after receipt by Bidder and Surety of written notice of default from Owner, which notice will be given with reasonable promptness, identifying this Bond and the Project and including a statement of the amount due.

5. Surety waives notice of any and all defenses based on or arising out of any time extension to issue Notice of Award agreed to in writing by Owner and Bidder, provided that the total time for issuing Notice of Award including extensions shall not in the aggregate exceed 120 days from the Bid due date without Surety's written consent.

6. No suit or action shall be commenced under this Bond prior to 30 calendar days after the notice of default required in Paragraph 4 above is received by Bidder and Surety and in no case later than one year after the Bid due date.

7. Any suit or action under this Bond shall be commenced only in a court of competent jurisdiction located in the state in which the Project is located.

8. Notices required hereunder shall be in writing and sent to Bidder and Surety at their respective addresses shown on the face of this Bond. Such notices may be sent by personal delivery, commercial courier, or by United States Registered or Certified Mail, return receipt requested, postage pre-paid, and shall be deemed to be effective upon receipt by the party concerned.

9. Surety shall cause to be attached to this Bond a current and effective Power of Attorney evidencing the authority of the officer, agent, or representative who executed this Bond on behalf of Surety to execute, seal, and deliver such Bond and bind the Surety thereby.

10. This Bond is intended to conform to all applicable statutory requirements. Any applicable requirement of any applicable statute that has been omitted from this Bond shall be deemed to be included herein as if set forth at length. If any provision of this Bond conflicts with any applicable statute, then the provision of said statute shall govern and the remainder of this Bond that is not in conflict therewith shall continue in full force and effect.

11. The term "Bid" as used herein includes a Bid, offer, or proposal as applicable.

SECTION 00431
TABULATION OF SUBCONTRACTORS AND SUPPLIERS

The Undersigned states that the following is a full and complete list of the proposed subcontractors and suppliers on this Project and the class of work to be performed by each and that such list will not be added to nor altered without written consent to the Owner through the Engineer.

| | **SUBCONTRACTOR OR SUPPLIER AND ADDRESS** | **CLASS OF WORK OR MATERIAL** |
|---|---|---|
| (1) | | |
| (2) | | |
| (3) | | |
| (4) | | |
| (5) | | |
| (6) | | |
| (7) | | |

BIDDER:_____

By:_____

Name:_____

Title:_____

Date:_____

SECTION 00440
FLORIDA TRENCH SAFETY ACT CERTIFICATION

The Bidder acknowledges that included in the various items of the proposal and in the Total Bid Price are costs for complying with the most current version of the Florida Trench Safety Act (90-96, Laws of Florida). The Bidder further identifies the costs to be summarized below:

| | Cost |
|---|---|
| 1. Trench Safety Act Compliance | $ _____ |
| 2. Special Shoring | $ _____ |

Identify method of compliance for Item #1: _____

_____

Identify or attach a copy of Special Shoring Requirements for Item #2: _____

_____

The undersigned certifies that he/she is the Contractor who will perform the trench excavation for this project and hereby gives written assurance that Contractor will comply with the applicable trench safety standards specifically set forth in Florida's Trench Safety Act (90-96, Laws of Florida).

BIDDER: _____

By: _____

Name: _____

Title: _____

Sworn to and subscribed before me this_____day of_____, 20___.

_____
Notary Public

My Commission Expires: _____

# QUALIFICATIONS STATEMENT

**THE INFORMATION SUPPLIED IN THIS DOCUMENT IS CONFIDENTIAL TO THE EXTENT PERMITTED BY LAWS AND REGULATIONS**

**1. SUBMITTED BY:**

Official Name of Firm: _____

Address: _____

_____

_____

**2. SUBMITTED TO:** _____

**3. SUBMITTED FOR:** _____

Owner: _____

Project Name: _____

_____

_____

_____

**TYPE OF WORK:** _____

_____

_____

**4. CONTRACTOR'S CONTACT INFORMATION**

Contact Person: _____

Title: _____

Phone: _____

Email: _____


**Copyright © 2013 National Society of Professional Engineers, American Council of Engineering Companies, and American Society of Civil Engineers. All rights reserved.**

**5. AFFILIATED COMPANIES:**

Name: _____

Address: _____

_____

_____

**6. TYPE OF ORGANIZATION:**

☐ SOLE PROPRIETORSHIP

Name of Owner: _____

Doing Business As: _____

Date of Organization: _____

☐ PARTNERSHIP

Date of Organization: _____

Type of Partnership: _____

Name of General Partner(s): _____

_____

_____

☐ CORPORATION

State of Organization: _____

Date of Organization: _____

Executive Officers:

- President: _____

- Vice President(s): _____

_____

_____

- Treasurer: _____

- Secretary: _____


Copyright © 2013 National Society of Professional Engineers, American Council of Engineering Companies, and American Society of Civil Engineers. All rights reserved.

☐ LIMITED LIABILITY COMPANY

State of Organization: _____

Date of Organization: _____

Members: _____

_____

_____

_____

☐ JOINT VENTURE

Sate of Organization: _____

Date of Organization: _____

Form of Organization: _____

Joint Venture Managing Partner

- Name: _____

- Address: _____

_____

_____

Joint Venture Managing Partner

- Name: _____

- Address: _____

_____

Joint Venture Managing Partner

- Name: _____

- Address: _____

_____


Copyright © 2013 National Society of Professional Engineers, American Council of Engineering Companies, and American Society of Civil Engineers. All rights reserved.

## 7. LICENSING

Jurisdiction: _____

Type of License: _____

License Number: _____

Jurisdiction: _____

Type of License: _____

License Number: _____

## 8. CERTIFICATIONS

CERTIFIED BY:

Disadvantage Business Enterprise: _____

Minority Business Enterprise: _____

Woman Owned Enterprise: _____

Small Business Enterprise: _____

Other (_____): _____

## 9. BONDING INFORMATION

Bonding Company: _____

Address: _____

_____

Bonding Agent: _____

Address: _____

_____

_____

Contact Name: _____

Phone: _____

Aggregate Bonding Capacity: _____

Available Bonding Capacity as of date of this submittal: _____


Copyright © 2013 National Society of Professional Engineers, American Council of Engineering Companies, and American Society of Civil Engineers. All rights reserved.

## 10. FINANCIAL INFORMATION

Financial Institution: _____

Address: _____

_____

Account Manager: _____

Phone: _____

INCLUDE AS AN ATTACHMENT AN AUDITED BALANCE SHEET FOR EACH OF THE LAST 3 YEARS

## 11. CONSTRUCTION EXPERIENCE:

Current Experience:

List on **Schedule A** all uncompleted projects currently under contract (If Joint Venture list each participant's projects separately).

Previous Experience:

List on **Schedule B** all projects completed within the last 5 Years (If Joint Venture list each participant's projects separately).

Has firm listed in Section 1 ever failed to complete a construction contract awarded to it?

☐ YES ☐ NO

If YES, attach as an Attachment details including Project Owner's contact information.

Has any Corporate Officer, Partner, Joint Venture participant or Proprietor ever failed to complete a construction contract awarded to them in their name or when acting as a principal of another entity?

☐ YES ☐ NO

If YES, attach as an Attachment details including Project Owner's contact information.

Are there any judgments, claims, disputes or litigation pending or outstanding involving the firm listed in Section 1 or any of its officers (or any of its partners if a partnership or any of the individual entities if a joint venture)?

☐ YES ☐ NO

If YES, attach as an Attachment details including Project Owner's contact information.


Copyright © 2013 National Society of Professional Engineers, American Council of Engineering Companies, and American Society of Civil Engineers. All rights reserved.

## 12. SAFETY PROGRAM:

Name of Contractor's Safety Officer:_____

Include the following as attachments:

Provide as an Attachment Contractor's (and Contractor's proposed Subcontractors and Suppliers furnishing or performing Work having a value in excess of 10 percent of the total amount of the Bid) OSHA No. 500- Log & Summary of Occupational Injuries & Illnesses for the past 5 years.

Provide as an Attachment Contractor's (and Contractor's proposed Subcontractors and Suppliers furnishing or performing Work having a value in excess of 10 percent of the total amount of the Bid) list of all OSHA Citations & Notifications of Penalty (monetary or other) received within the last 5 years (indicate disposition as applicable) - IF NONE SO STATE.

Provide as an Attachment Contractor's (and Contractor's proposed Subcontractors and Suppliers furnishing or performing Work having a value in excess of 10 percent of the total amount of the Bid) list of all safety citations or violations under any state all received within the last 5 years (indicate disposition as applicable) - IF NONE SO STATE.

Provide the following for the firm listed in Section V (and for each proposed Subcontractor furnishing or performing Work having a value in excess of 10 percent of the total amount of the Bid) the following (attach additional sheets as necessary):

Workers' compensation Experience Modification Rate (EMR) for the last 5 years:

| | | | |
|---|---|---|---|
| YEAR | _____ | EMR | _____ |
| YEAR | _____ | EMR | _____ |
| YEAR | _____ | EMR | _____ |
| YEAR | _____ | EMR | _____ |
| YEAR | _____ | EMR | _____ |

Total Recordable Frequency Rate (TRFR) for the last 5 years:

| | | | |
|---|---|---|---|
| YEAR | _____ | TRFR | _____ |
| YEAR | _____ | TRFR | _____ |
| YEAR | _____ | TRFR | _____ |
| YEAR | _____ | TRFR | _____ |
| YEAR | _____ | TRFR | _____ |


Copyright © 2013 National Society of Professional Engineers, American Council of Engineering Companies, and American Society of Civil Engineers. All rights reserved.

Total number of man-hours worked for the last 5 Years:

| | | | |
|---|---|---|---|
| YEAR | _____ | TOTAL NUMBER OF MAN-HOURS | _____ |
| YEAR | _____ | TOTAL NUMBER OF MAN-HOURS | _____ |
| YEAR | _____ | TOTAL NUMBER OF MAN-HOURS | _____ |
| YEAR | _____ | TOTAL NUMBER OF MAN-HOURS | _____ |
| YEAR | _____ | TOTAL NUMBER OF MAN-HOURS | _____ |

Provide Contractor's (and Contractor's proposed Subcontractors and Suppliers furnishing or performing Work having a value in excess of 10 percent of the total amount of the Bid) Days Away From Work, Days of Restricted Work Activity or Job Transfer (DART) incidence rate for the particular industry or type of Work to be performed by Contractor and each of Contractor's proposed Subcontractors and Suppliers) for the last 5 years:

| | | | |
|---|---|---|---|
| YEAR | _____ | DART | _____ |
| YEAR | _____ | DART | _____ |
| YEAR | _____ | DART | _____ |
| YEAR | _____ | DART | _____ |
| YEAR | _____ | DART | _____ |

**13. EQUIPMENT:**

MAJOR EQUIPMENT:

List on **Schedule C** all pieces of major equipment available for use on Owner's Project.


**Copyright © 2013 National Society of Professional Engineers, American Council of Engineering Companies, and American Society of Civil Engineers. All rights reserved.**

I HEREBY CERTIFY THAT THE INFORMATION SUBMITTED HEREWITH, INCLUDING ANY ATTACHMENTS, IS TRUE TO THE BEST OF MY KNOWLEDGE AND BELIEF.

NAME OF ORGANIZATION: _____

BY: _____

TITLE: _____

DATED: _____

NOTARY ATTEST:

SUBSCRIBED AND SWORN TO BEFORE ME

THIS _____ DAY OF _____, 20___

NOTARY PUBLIC - STATE OF _____

MY COMMISSION EXPIRES:_____

REQUIRED ATTACHMENTS

1. Schedule A (Current Experience).
2. Schedule B (Previous Experience).
3. Schedule C (Major Equipment).
4. Audited balance sheet for each of the last 3 years for firm named in Section 1.
5. Evidence of authority for individuals listed in Section 7 to bind organization to an agreement.
6. Resumes of officers and key individuals (including Safety Officer) of firm named in Section 1.
7. Required safety program submittals listed in Section 13.
8. Additional items as pertinent.


**Copyright © 2013 National Society of Professional Engineers, American Council of Engineering Companies, and American Society of Civil Engineers. All rights reserved.**

# SCHEDULE A

CURRENT EXPERIENCE

| Project Name | Owner's Contact Person | Design Engineer | Contract Date | Type of Work | Status | Cost of Work |
|---|---|---|---|---|---|---|
| | Name:<br>Address:<br>Telephone: | Name:<br>Company:<br>Telephone: | | | | |
| | Name:<br>Address:<br>Telephone: | Name:<br>Company:<br>Telephone: | | | | |
| | Name:<br>Address:<br>Telephone: | Name:<br>Company:<br>Telephone: | | | | |
| | Name:<br>Address:<br>Telephone: | Name:<br>Company:<br>Telephone: | | | | |
| | Name:<br>Address:<br>Telephone: | Name:<br>Company:<br>Telephone: | | | | |
| | Name:<br>Address:<br>Telephone: | Name:<br>Company:<br>Telephone: | | | | |
| | Name:<br>Address:<br>Telephone: | Name:<br>Company:<br>Telephone: | | | | |


**Copyright © 2013 National Society of Professional Engineers, American Council of Engineering Companies, and American Society of Civil Engineers. All rights reserved.**

## SCHEDULE B

PREVIOUS EXPERIENCE (Include ALL Projects Completed within last 5 years)

| Project Name | Owner's Contact Person | Design Engineer | Contract Date | Type of Work | Status | Cost of Work |
|---|---|---|---|---|---|---|
| | Name:<br>Address:<br>Telephone: | Name:<br>Company:<br>Telephone: | | | | |
| | Name:<br>Address:<br>Telephone: | Name:<br>Company:<br>Telephone: | | | | |
| | Name:<br>Address:<br>Telephone: | Name:<br>Company:<br>Telephone: | | | | |
| | Name:<br>Address:<br>Telephone: | Name:<br>Company:<br>Telephone: | | | | |
| | Name:<br>Address:<br>Telephone: | Name:<br>Company:<br>Telephone: | | | | |
| | Name:<br>Address:<br>Telephone: | Name:<br>Company:<br>Telephone: | | | | |
| | Name:<br>Address:<br>Telephone: | Name:<br>Company:<br>Telephone: | | | | |


**Copyright © 2013 National Society of Professional Engineers, American Council of Engineering Companies, and American Society of Civil Engineers. All rights reserved.**

## SCHEDULE B

PREVIOUS EXPERIENCE (Include ALL Projects Completed within last 5 years)

| Project Name | Owner's Contact Person | Design Engineer | Contract Date | Type of Work | Status | Cost of Work |
|---|---|---|---|---|---|---|
| | Name:<br>Address:<br>Telephone: | Name:<br>Company:<br>Telephone: | | | | |
| | Name:<br>Address:<br>Telephone: | Name:<br>Company:<br>Telephone: | | | | |
| | Name:<br>Address:<br>Telephone: | Name:<br>Company:<br>Telephone: | | | | |
| | Name:<br>Address:<br>Telephone: | Name:<br>Company:<br>Telephone: | | | | |
| | Name:<br>Address:<br>Telephone: | Name:<br>Company:<br>Telephone: | | | | |
| | Name:<br>Address:<br>Telephone: | Name:<br>Company:<br>Telephone: | | | | |
| | Name:<br>Address:<br>Telephone: | Name:<br>Company:<br>Telephone: | | | | |


**Copyright © 2013 National Society of Professional Engineers, American Council of Engineering Companies, and American Society of Civil Engineers. All rights reserved.**

SCHEDULE C - LIST OF MAJOR EQUIPMENT AVAILABLE

| ITEM | PURCHASE DATE | CONDITION | ACQUIRED VALUE |
|---|---|---|---|
| | | | |
| | | | |
| | | | |
| | | | |
| | | | |
| | | | |
| | | | |
| | | | |
| | | | |
| | | | |
| | | | |
| | | | |
| | | | |
| | | | |
| | | | |
| | | | |
| | | | |
| | | | |
| | | | |

**EJCDC® 00451, Qualifications Statement.**
**Copyright © 2013 National Society of Professional Engineers, American Council of Engineering Companies, and American Society of Civil Engineers. All rights reserved.**

SECTION 00452
BIDDER'S STATEMENT OF DISPUTES, LITIGATION,
ARBITRATION, AND SURETY COMPLETION
LAST THREE (3) YEARS

| PROJECT | NAME AND ADDRESS OF OWNER OR ENGINEER | NAME AND PHONE OF OWNER OR ENGINEER REPRESENTATIVE | DATE OF CONTRACT | AMOUNT | STATUS |
|---|---|---|---|---|---|

(Signed)_____

SECTION 00453

NONCOLLUSION AFFIDAVIT

TO: The_____, herein called the "Owner."

Pursuant to bidding requirements for the work titled "_____

_____,"

the enclosed contract documents shall be provided to the Owner.

State of _____

County of _____

_____, being first duly
(Officer's Name)

sworn, deposes, and says that:

A. He\She is_____(officer's title) of_____(company name), the Bidder that has submitted the attached bid;

B. He\She is fully informed respecting the preparation and contents of the attached bid and of all pertinent circumstances respecting such bid;

C. Such bid is genuine and is not a collusive or sham bid;

D. Neither the said Bidder nor any of its officers, partners, owners, agents, representatives, employees, or parties in interest, including this affiant, has in any way colluded, conspired, connived, or agreed, directly or indirectly with any other Bidder, firm, or person to submit a collusive or sham bid in connection with the contract for which the attached bid has been submitted or to refrain from bidding in connection with such contract, or has in any manner, directly or indirectly, sought by agreement or collusion or communication or conference with any other Bidder, firm, or person to fix the price or prices in the attached bid or of any other Bidder, or to fix any overhead, profit, or cost element of the bid price or the bid price of any other Bidder, or to secure through any collusion, conspiracy, connivance, or unlawful agreement any advantage against the _____ or any person interested in the proposed contract; and

E. The price or prices quoted in the attached bid are fair and proper and are not tainted by any collusion, conspiracy, connivance, or unlawful agreement on the part of the Bidder or any of its agents, representatives, owners, employees, or parties in interest, including this affiant.

(Signed) _____

_____

Subscribed and sworn to before me
this_____day of_____, 20_____

_____
Notary Public

My commission expires _____

SECTION 00454
DRUG-FREE WORKPLACE CERTIFICATE

I, the undersigned, in accordance with Florida Statute 287.087, hereby certify that _____
_____(Print or Type Name of Firm)

- Publishes a written statement notifying that the unlawful manufacture, distribution, dispensing, possession, or use of a controlled substance is prohibited in the workplace named above, and specifying actions that will be taken against violations of such prohibition.

- Informs employees about the dangers of drug abuse in the workplace; the firm's policy of maintaining a drug-free working environment and available drug counseling, rehabilitation, and employee assistance programs; and the penalties that may be imposed upon employees for drug-use violations.

- Gives each employee engaged in providing commodities or contractual services that are under bid or proposal a copy of the statement specified above.

- Notifies the employees that as a condition of working on the commodities or contractual services under bid or proposal, the employee will abide by the terms of the statement and will notify the employer of any conviction of or plea of guilty or nolo contendere to any violation of Chapter 1893 or any controlled substance law of the State of Florida or the United States for a violation occurring in the workplace, no later than 5 days after such conviction, and requires employees to sign copies of such written statement to acknowledge their receipt.

- Imposes a sanction on or requires the satisfactory participation in a drug-abuse assistance or rehabilitation program, if such is available in the employee's community, by any employee who is so convicted.

- Makes a good faith effort to continue to maintain a drug-free workplace through the implementation of the drug-free workplace program.

"As a person authorized to sign this statement, I certify that the business, firm, or corporation named above complies fully with the requirements set forth herein."

_____
Authorized Signature

_____
Date Signed

State of: _____

County of: _____

Sworn to and subscribed before me this day of_____, 20___

Personally known or Produced Identification _____
(Specify Type of Identification)

_____
Signature of Notary

My Commission Expires_____

SECTION 00455
SWORN STATEMENT UNDER SECTION 287.133(3)(a),
FLORIDA STATUTES, ON PUBLIC ENTITY CRIMES

(To be signed in the presence of a notary public or other officer authorized to administer oaths.)

STATE OF _____

COUNTY OF _____

Before me, the undersigned authority, personally appeared _____, who, being by me first duly sworn, made the following statement:

1. The business address of _____
(firm name of Bidder/Contractor)

is _____.

2. My relationship to _____
(firm name of Bidder/Contractor)

is _____.
(relationship such as sole proprietor, partner, president, vice president)

3. I understand that a "public entity crime" as defined in Section 287.133 of the Florida Statutes includes a violation of any state or federal law by a person with respect to and directly related to the transaction of business with any public entity in Florida or with an agency or political subdivision of any other state or with the United States, including, but not limited to, any bid or contract for goods or services to be provided to any public entity or such an agency or political subdivision and involving antitrust, fraud, theft, bribery, collusion, racketeering, conspiracy, or material misrepresentation.

4. I understand that "convicted" or "conviction" is defined by the statute to mean a finding of guilt or a conviction of a public entity crime, with or without adjudication of guilt, in any federal or state trial court of record relating to charges brought by indictment or information after July 1, 1989, as a result of a jury verdict, nonjury trial, or entry of a plea of guilty or nolo contendere.

5. I understand that "affiliate" is defined by the statute to mean (1) a predecessor or successor of a person or a corporation convicted of a public entity crime; or (2) an entity under the control of any natural person who is active in the management of the entity and who has been convicted of a public entity crime; or (3) those officers, directors, executives, partners, shareholders, employees, members, and agents who are active in the management of an affiliate; or (4) a person or corporation who knowingly entered into a joint venture with a person who has been convicted of a public entity crime in Florida during the preceding 36 months.

6. Neither the Bidder/Contractor nor any officer, director, executive, partner, shareholder, employee, member or agent who is active in the management of the Bidder/Contractor, nor any affiliate of the Bidder/Contractor, has been convicted of public entity crime subsequent to July 1, 1989.

(Draw a line through Paragraph 6 if Paragraph 7 below applies.)

7. There has been a conviction of a public entity crime by the Bidder/Contractor, or an officer, director, executive, partner, shareholder, employee, member or agent of the Bidder/Contractor who is active in the management of the Bidder/Contractor or an affiliate of the Bidder/Contractor. A determination has been made pursuant to Section 287.133(3) by order of the Division of Administrative Hearings that it is not in the public interest for the name of the convicted person or affiliate to appear on the convicted vendor list. The name of the convicted person or affiliate is_____.

A copy of the order of the Division of Administrative Hearings is attached to this statement.

(Draw a line through Paragraph 7 if Paragraph 6 above applies.)

_____
(Signature)

Sworn to and subscribed to before me in the State and County first mentioned above on the_____day of _____, 20____.

_____
Notary Public

(affix seal)

_____
My commission expires

SECTION 00456
SCRUTINIZED COMPANIES CERTIFICATION FORM

By execution below, I, _____, on behalf of _____ (hereinafter, the "Contractor"), hereby swear or affirm to the following certifications:

The following certifications apply to all procurements:

1. The Contractor has reviewed section 215.4725, Florida Statutes, section 215.473, Florida Statutes and section 287.135, Florida Statutes, and understands the same.
2. The Contractor is not on the Scrutinized Companies that Boycott Israel List nor is the Contractor engaged in a boycott of Israel.
3. If awarded a contract, the Contractor agrees to require these certifications for applicable subcontracts entered into for the performance of work/services under this procurement.
4. If awarded a contract, the Contractor agrees that the certifications in this section shall be effective and relied upon by the City for the entire term of the contract, including any and all renewals.

If the contract awarded hereunder is for one million dollars or more, the following additional certifications apply:

1. The Contractor is not on the Scrutinized Companies with Activities in Sudan List.
2. The Contractor is not on the Scrutinized Companies with Activities in the Iran Petroleum Energy Sector List.
3. The Contractor is not engaged in business operations in Cuba or Syria.
5. If awarded a contract, the Contractor agrees to require these certifications for applicable subcontracts entered into for the performance of work/services under this procurement.
6. If awarded a contract, the Contractor agrees that the certifications in this section shall be effective and relied upon by the City for the entire term of the contract, including any and all renewals.

**CONTRACTOR:**
By:_____
Name: _____
Title: _____
Date: _____

STATE OF FLORIDA
COUNTY OF _____

The foregoing instrument was sworn to (or affirmed) and subscribed before this _____ day of _____, 20_____, by _____, who is the _____ of _____, who is personally known to me or who has produced_____ as identification.

NOTARY PUBLIC
Printed Name of Notary_____
My Commission expires: _____

# NOTICE OF AWARD

Date of Issuance:

| | | |
|---|---|---|
| Owner: | Village of Palm Springs | Owner's Task Order No.: |
| Engineer: | Holtz Consulting Engineers, Inc. | Engineer's Project No.: |
| Project: | Emergency Generator Improvements | Contract Name: |

Bidder:

Bidder's Address:

**TO BIDDER:**

You are notified that Owner has accepted your Bid dated [_____] for the above Contract, and that you are the Successful Bidder and are awarded a Contract for:

Village of Palm Springs Emergency Generator Improvements Project.

The Contract Price of the awarded Contract is: $_____

[ ] unexecuted counterparts of the Agreement accompany this Notice of Award, and one copy of the Contract Documents accompanies this Notice of Award, or has been transmitted or made available to Bidder electronically.

☐ a set of the Drawings will be delivered separately from the other Contract Documents.

You must comply with the following conditions precedent within 15 days of the date of this Notice of Award:

1. Deliver to Owner [____]counterparts of the Agreement, fully executed by Bidder.
2. Deliver with the executed Agreement(s) the Contract security *[e.g., performance and payment bonds]* and insurance documentation as specified in the Instructions to Bidders and General Conditions, Articles 2 and 6.
3. Other conditions precedent (if any):

Failure to comply with these conditions within the time specified will entitle Owner to consider you in default, annul this Notice of Award, and declare your Bid security forfeited.

Within ten days after you comply with the above conditions, Owner will return to you one fully executed counterpart of the Agreement, together with any additional copies of the Contract Documents as indicated in Paragraph 2.02 of the General Conditions.

Owner**:**

Authorized Signature

By:

Title:

Copy: Engineer

# AGREEMENT
# BETWEEN OWNER AND CONTRACTOR
# FOR CONSTRUCTION CONTRACT (STIPULATED PRICE)

THIS AGREEMENT is by and between Village of Palm Springs ("Owner") and

("Contractor").

Owner and Contractor hereby agree as follows:

**ARTICLE 1 – WORK**

1.01 Contractor shall complete all Work as specified or indicated in the Contract Documents. The Work is generally described as follows:

**ARTICLE 2 – THE PROJECT**

2.01 The Project, of which the Work under the Contract Documents is a part, is generally described as follows: Emergency Generator Improvements Project.

**ARTICLE 3 – ENGINEER**

3.01 The part of the Project that pertains to the Work has been designed by Holtz Consulting Engineers, Inc.

3.02 The Owner has retained Holtz Consulting Engineers, Inc. ("Engineer") to act as Owner's representative, assume all duties and responsibilities, and have the rights and authority assigned to Engineer in the Contract Documents in connection with the completion of the Work in accordance with the Contract Documents.

**ARTICLE 4 – CONTRACT TIMES**

4.01 *Time of the Essence*

A. All time limits for Milestones, if any, Substantial Completion, and completion and readiness for final payment as stated in the Contract Documents are of the essence of the Contract.

4.02 *Contract Times: Days*

A. The Work will be substantially completed within 210 days after the date when the Contract Times commence to run as provided in Paragraph 4.01 of the General Conditions, and completed and ready for final payment in accordance with Paragraph 15.06 of the General Conditions within 240 days after the date when the Contract Times commence to run.

4.03 *Liquidated Damages*

A. Contractor and Owner recognize that time is of the essence as stated in Paragraph 4.01 above and that Owner will suffer financial and other losses if the Work is not completed and Milestones not achieved within the times specified in Paragraph 4.02 above, plus any extensions thereof allowed in accordance with the Contract. The parties also recognize the delays, expense, and difficulties involved in proving in a legal or arbitration proceeding the actual loss suffered by Owner if the Work is not completed on time. Accordingly, instead of

requiring any such proof, Owner and Contractor agree that as liquidated damages for delay (but not as a penalty):

1. Substantial Completion: Contractor shall pay Owner $ 1,000.00 for each day that expires after the time (as duly adjusted pursuant to the Contract) specified in Paragraph 4.02.A above for Substantial Completion until the Work is substantially complete.

2. Completion of Remaining Work: After Substantial Completion, if Contractor shall neglect, refuse, or fail to complete the remaining Work within the Contract Times (as duly adjusted pursuant to the Contract) for completion and readiness for final payment, Contractor shall pay Owner $ 500.00 for each day that expires after such time until the Work is completed and ready for final payment.

3. Liquidated damages for failing to timely attain Substantial Completion and final completion are not additive and will not be imposed concurrently.

---

4.04 *Special Damages*

A. In addition to the amount provided for liquidated damages, Contractor shall reimburse Owner (1) for any fines or penalties imposed on Owner as a direct result of the Contractor's failure to attain Substantial Completion according to the Contract Times.

**ARTICLE 5 – CONTRACT PRICE**

5.01 Owner shall pay Contractor for completion of the Work in accordance with the Contract Documents the amounts that follow, subject to adjustment under the Contract:

A. For all Unit Price Work, an amount equal to the sum of the extended prices (established for each separately identified item of Unit Price Work by multiplying the unit price times the actual quantity of that item):

| **Unit Price Work** | | | | | |
|---|---|---|---|---|---|
| **Item No.** | **Description** | **Unit** | **Estimated Quantity** | **Unit Price** | **Extended Price** |
| | | | | | |
| | | | | | |
| | | | | | |
| | | | | | |
| | | | | | |
| Total of all Extended Prices for Unit Price Work (subject to final adjustment based on actual quantities) | | | | | $ |

The extended prices for Unit Price Work set forth as of the Effective Date of the Contract are based on estimated quantities. As provided in Paragraph 13.03 of the General Conditions, estimated quantities are not guaranteed, and determinations of actual quantities and classifications are to be made by Engineer.

**ARTICLE 6 – PAYMENT PROCEDURES**

6.01 *Submittal and Processing of Payments*

A. Contractor shall submit Applications for Payment in accordance with Article 15 of the General Conditions. Applications for Payment will be processed by Engineer as provided in the General Conditions.

6.02 *Progress Payments; Retainage*

A. Owner shall make progress payments on account of the Contract Price on the basis of Contractor's Applications for Payment on or about the 20th day of each month during performance of the Work as provided in Paragraph 6.02.A.1 below, provided that such Applications for Payment have been submitted in a timely manner and otherwise meet the requirements of the Contract. All such payments will be measured by the Schedule of Values established as provided in the General Conditions (and in the case of Unit Price Work based on the number of units completed) or, in the event there is no Schedule of Values, as provided elsewhere in the Contract.

1. Prior to Substantial Completion, progress payments will be made in accordance with Florida Statute 255.078 but, in each case, less the aggregate of payments previously made and less such amounts as Owner may withhold, including but not limited to liquidated damages, in accordance with the Contract

B. Upon Substantial Completion, Owner shall pay an amount sufficient to increase total payments to Contractor to 100 percent of the Work completed, less such amounts set off by Owner pursuant to Paragraph 15.01.E of the General Conditions, and less 200 percent of Engineer's estimate of the value of Work to be completed or corrected as shown on the punch list of items to be completed or corrected prior to final payment.

6.03 *Final Payment*

A. Upon final completion and acceptance of the Work in accordance with Paragraph 15.06 of the General Conditions, Owner shall pay the remainder of the Contract Price as recommended by Engineer as provided in said Paragraph 15.06.

**ARTICLE 7 – INTEREST**

7.01 All amounts not paid when due shall bear interest at the rate of *1* percent per annum.

**ARTICLE 8 – CONTRACTOR'S REPRESENTATIONS**

8.01 In order to induce Owner to enter into this Contract, Contractor makes the following representations:

A. Contractor has examined and carefully studied the Contract Documents, and any data and reference items identified in the Contract Documents.

B. Contractor has visited the Site, conducted a thorough, alert visual examination of the Site and adjacent areas, and become familiar with and is satisfied as to the general, local, and Site conditions that may affect cost, progress, and performance of the Work.

C. Contractor is familiar with and is satisfied as to all Laws and Regulations that may affect cost, progress, and performance of the Work.

D. Contractor has carefully studied all provided: (1) reports of explorations and tests of subsurface conditions at or adjacent to the Site and all drawings of physical conditions

relating to existing surface or subsurface structures at the Site that have been identified in the Supplementary Conditions, especially with respect to Technical Data in such reports and drawings, and (2) reports and drawings relating to Hazardous Environmental Conditions, if any, at or adjacent to the Site that have been identified in the Supplementary Conditions, especially with respect to Technical Data in such reports and drawings.

E. Contractor has considered the information known to Contractor itself; information commonly known to contractors doing business in the locality of the Site; information and observations obtained from visits to the Site; the Contract Documents; and the Site-related reports (if provided) and drawings identified in the Contract Documents, with respect to the effect of such information, observations, and documents on (1) the cost, progress, and performance of the Work; (2) the means, methods, techniques, sequences, and procedures of construction to be employed by Contractor; and (3) Contractor's safety precautions and programs.

F. Based on the information and observations referred to in the preceding paragraph, Contractor agrees that no further examinations, investigations, explorations, tests, studies, or data are necessary for the performance of the Work at the Contract Price, within the Contract Times, and in accordance with the other terms and conditions of the Contract.

G. Contractor is aware of the general nature of work to be performed by Owner and others at the Site that relates to the Work as indicated in the Contract Documents.

H. Contractor has given Engineer written notice of all conflicts, errors, ambiguities, or discrepancies that Contractor has discovered in the Contract Documents, and the written resolution thereof by Engineer is acceptable to Contractor.

I. The Contract Documents are generally sufficient to indicate and convey understanding of all terms and conditions for performance and furnishing of the Work.

J. Contractor's entry into this Contract constitutes an incontrovertible representation by Contractor that without exception all prices in the Agreement are premised upon performing and furnishing the Work required by the Contract Documents.

**ARTICLE 9 – CONTRACT DOCUMENTS**

9.01 *Contents*

A. The Contract Documents consist of the following:

1. This Agreement (pages 1 to _12__, inclusive).
2. Performance bond (pages 1 to 3, inclusive).
3. Payment bond (pages 1 to 3, inclusive).
4. General Conditions (pages 1 to 65, inclusive).
5. Supplementary Conditions (pages 1 to 10, inclusive).
6. Specifications as listed in the table of contents of the Project Manual.
7. Drawings (not attached but incorporated by reference) consisting of _15__ sheets with each sheet bearing the following general title: _Village of Palm Springs Emergency Generator Improvements.
8. Addenda (numbers ___ to ___, inclusive).
9. Exhibits to this Agreement (enumerated as follows):

a. Contractor's Bid (pages ___ to ___, inclusive).

10. The following which may be delivered or issued on or after the Effective Date of the Contract and are not attached hereto:

a. Notice to Proceed.

b. Work Change Directives.

c. Change Orders.

d. Field Orders.

B. The documents listed in Paragraph 9.01.A are attached to this Agreement (except as expressly noted otherwise above).

C. There are no Contract Documents other than those listed above in this Article 9.

D. The Contract Documents may only be amended, modified, or supplemented as provided in the General Conditions.

**ARTICLE 10 – MISCELLANEOUS**

10.01 *Terms*

A. Terms used in this Agreement will have the meanings stated in the General Conditions and the Supplementary Conditions.

10.02 *Assignment of Contract*

A. Unless expressly agreed to elsewhere in the Contract, no assignment by a party hereto of any rights under or interests in the Contract will be binding on another party hereto without the written consent of the party sought to be bound; and, specifically but without limitation, money that may become due and money that is due may not be assigned without such consent (except to the extent that the effect of this restriction may be limited by law), and unless specifically stated to the contrary in any written consent to an assignment, no assignment will release or discharge the assignor from any duty or responsibility under the Contract Documents.

10.03 *Successors and Assigns*

A. Owner and Contractor each binds itself, its successors, assigns, and legal representatives to the other party hereto, its successors, assigns, and legal representatives in respect to all covenants, agreements, and obligations contained in the Contract Documents.

10.04 *Severability*

A. Any provision or part of the Contract Documents held to be void or unenforceable under any Law or Regulation shall be deemed stricken, and all remaining provisions shall continue to be valid and binding upon Owner and Contractor, who agree that the Contract Documents shall be reformed to replace such stricken provision or part thereof with a valid and enforceable provision that comes as close as possible to expressing the intention of the stricken provision.

10.05 *Contractor's Certifications*

A. Contractor certifies that it has not engaged in corrupt, fraudulent, collusive, or coercive practices in competing for or in executing the Contract. For the purposes of this Paragraph 10.05:

1. “corrupt practice” means the offering, giving, receiving, or soliciting of any thing of value likely to influence the action of a public official in the bidding process or in the Contract execution;

2. “fraudulent practice” means an intentional misrepresentation of facts made (a) to influence the bidding process or the execution of the Contract to the detriment of Owner, (b) to establish Bid or Contract prices at artificial non-competitive levels, or (c) to deprive Owner of the benefits of free and open competition;

3. “collusive practice” means a scheme or arrangement between two or more Bidders, with or without the knowledge of Owner, a purpose of which is to establish Bid prices at artificial, non-competitive levels; and

4. “coercive practice” means harming or threatening to harm, directly or indirectly, persons or their property to influence their participation in the bidding process or affect the execution of the Contract.

10.06 *Indemnity*

A. The parties recognize that the CONTRACTOR is an independent contractor. The CONTRACTOR agrees to assume liability for and indemnify, hold harmless, and defend the VILLAGE, its council members, mayor, officers, employees, agents, and attorneys of, from, and against all liability and expense, including reasonable attorney’s fees, in connection with any and all claims, demands, damages, actions, causes of action, and suits in equity of whatever kind or nature, including claims for personal injury, property damage, equitable relief, or loss of use, to the extent caused by the negligence, recklessness, or intentionally wrongful conduct of the CONTRACTOR, its agents, officers, Contractors, subcontractors, employees, or anyone else utilized by the CONTRACTOR in the performance of this Contract. The CONTRACTOR’s liability hereunder shall include all attorney’s fees and costs incurred by the VILLAGE in the enforcement of this indemnification provision. This includes claims made by the employees of the CONTRACTOR against the VILLAGE and the CONTRACTOR hereby waives its entitlement, if any, to immunity under Section 440.11, Florida Statutes. The obligations contained in this provision shall survive termination of this Contract and shall not be limited by the amount of any insurance required to be obtained or maintained under this Contract.

B. Subject to the limitations set forth in this Section, CONTRACTOR shall assume control of the defense of any claim asserted by a third party against the VILLAGE and, in connection with such defense, shall appoint lead counsel, in each case at the CONTRACTOR’s expense. The VILLAGE shall have the right, at its option, to participate in the defense of any third party claim, without relieving CONTRACTOR of any of its obligations hereunder. If the CONTRACTOR assumes control of the defense of any third party claim in accordance with this paragraph, the CONTRACTOR shall obtain the prior written consent of the VILLAGE before entering into any settlement of such claim. Notwithstanding anything to the contrary in this Section, the CONTRACTOR shall not assume or maintain control of the defense of any third party claim, but shall pay the fees of counsel retained by the VILLAGE and all expenses, including experts’ fees, if (i) an adverse determination with respect to the third party claim would, in the good faith judgment of the VILLAGE, be detrimental in any material respect to the VILLAGE’s reputation; (ii) the third party claim seeks an injunction or equitable relief against the VILLAGE; or (iii) the CONTRACTOR has failed or is failing to prosecute or defend vigorously the third party claim. Each party shall cooperate, and cause its agents to cooperate, in the defense or prosecution of any third party claim and shall furnish or cause to be furnished such records and information, and attend such

conferences, discovery proceedings, hearings, trials, or appeals, as may be reasonably requested in connection therewith.

C. It is the specific intent of the parties hereto that the foregoing indemnification complies with Section 725.06, Florida Statutes, as amended. CONTRACTOR expressly agrees that it will not claim, and waives any claim, that this indemnification violates Section 725.06, Florida Statues. Nothing contained in the foregoing indemnification shall be construed as a waiver of any immunity or limitation of liability the VILLAGE may have under the doctrine of sovereign immunity or Section 768.28, Florida Statutes.

10.07 *Governing Law and Remedies*

A. The validity of this Agreement and of any of its terms or provisions, as well as the rights and duties of the parties hereunder, shall be governed by the laws of the State of Florida and venue for any and all disputes related to or arising from this Agreement shall be in Palm Beach County, Florida.

B. No remedy herein conferred upon any party is intended to be exclusive of any other remedy, and each and every such remedy shall be cumulative and shall be in addition to every other remedy given hereunder or now or hereafter existing at law or in equity or by statute or otherwise. No single or partial exercise by any party of any right, power, or remedy hereunder shall preclude any other or further exercise thereof.

10.08 *Office of the Inspector General*

A. Palm Beach County has established the Office of the Inspector General, which is authorized and empowered to review past, present, and proposed County programs, contracts, transactions, accounts and records. The Inspector General (IG) has the power to subpoena witnesses, administer oaths, require the production of records, and monitor existing projects and programs. The Inspector General may, on a random basis, perform audits on all Village contracts.

10.09 *Public Records*

Contractor shall comply with Florida's Public Records Act, Chapter 119, Florida Statutes, and, if determined to be acting on behalf of the Village as provided under section 119.011(2), Florida Statutes, specifically agrees to:

(a) Keep and maintain public records required by the Village to perform the service.

(b) Upon request from the Village's custodian of public records or designee, provide the Village with a copy of the requested records or allow the records to be inspected or copied within a reasonable time at a cost that does not exceed the cost provided in Chapter 119, Florida Statutes, or as otherwise provided by law.

(c) Ensure that public records that are exempt or confidential and exempt from public records disclosure requirements are not disclosed except as authorized by law for the duration of this Contract and following completion of this Contract if the Contractor does not transfer the records to the Village.

(d) Upon completion of this Contract, transfer, at no cost, to the Village all public records in possession of the Contractor or keep and maintain public records required by the Village to perform the service. If the Contractor transfers all public records to the Village upon completion of the Contract, the Contractor shall destroy any duplicate public records that are exempt or confidential and exempt from public records disclosure requirements. If the Contractor keeps

and maintains public records upon completion of the Contract, the Contractor shall meet all applicable requirements for retaining public records. All records stored electronically must be provided to the Village, upon request from the Village's custodian of public records or designee, in a format that is compatible with the information technology systems of the Village.

**IF THE CONTRACTOR HAS QUESTIONS REGARDING THE APPLICATION OF CHAPTER 119, FLORIDA STATUTES, TO THE CONSULTANT'S DUTY TO PROVIDE PUBLIC RECORDS RELATING TO THIS CONTRACT, CONTACT THE CUSTODIAN OF PUBLIC RECORDS OR DESIGNEE AT 561-434-5084, kwynn@vpsfl.org, OR BY MAIL AT VILLAGE OF PALM SPRINGS, 226 CYPRESS LANE, PALM SPRINGS, FL 33461.**

10.10 *Insurance*

A. The limits of liability for insurance required by Paragraph 6.03 of the General Conditions shall provide coverage for not less that the following amounts or greater where required by Law and Regulations:

1. Workers' Compensation, and related coverages under Paragraphs 6.03.A.1 and A.2 of the General Conditions:

| | | |
|---|---|---|
| a. | State | Statutory |
| b. | Applicable Federal | Statutory |
| c. | Employer Liability: | |
| | Bodily injury, each accident | $1,000,000 |
| | Bodily injury by disease, each employee | $500,000 |
| | Bodily injury/disease aggregate | $1,000,000 |
| d. | Foreign voluntary worker compensation | Statutory |

2. Contractor's Commercial General Liability under Paragraphs 6.03.B and 6.03.C of the General Conditions:

| | | |
|---|---|---|
| a. | General Aggregate | $2,000,000 |
| b. | Products – Completed Operations Aggregate | $2,000,000 |
| c. | Personal and Advertising Injury | $1,000,000 |
| d. | Each Occurrence (Bodily Injury and Property Damage) | $1,000,000 |

3. Automobile Liability under paragraph 6.03.D of the General Conditions:

| | | |
|---|---|---|
| a. | Bodily Injury: | |
| | Each Person | $500,000 |
| | Each Accident | $1,000,000 |
| b. | Property Damage: | |
| | Each Incident | $1,000,000 |

4. Umbrella of Excess Liability under paragraph 6.03.E of the General Conditions:

| | | | |
|---|---|---|---|
| a. | Excess or Umbrella Liability | | |
| | 1) | General Aggregate | $5,000,000 |
| | 2) | Each Occurrence | $1,000,000 |

5. Contractor's Pollution Liability under paragraph 6.03.F of the General Conditions:

a. Contractor's Pollution Liability
   1) General Aggregate $2,000,000
   2) Each Occurrence $1,000,000

6. Additional Insureds include the respective officers, partners, directors, employees, agents, consultants, and subconsultants of the following firms and municipal government(s):

   a. Village of Palm Springs

10.11 *Audit By Village*

A. The CONTRACTOR shall permit the VILLAGE, or any authorized representatives of the VILLAGE, at all reasonable times, access to and the right to examine all records, books, papers or documents related to the CONTRACTOR's performance under this Agreement including, but not limited to, expenses for sub-contractors, agents or assistants, direct and indirect charges for work performed and detailed documentation for all such work performed or to be performed under this Agreement.

10.12 *Copies of Data/Documents*

A. Copies or original documents prepared by the CONTRACTOR in relation to work associated with this Agreement shall be provided to the VILLAGE. Data collected, stored, and/or provided shall be in a form acceptable to the VILLAGE and agreed upon by the VILLAGE.

10.13 *Ownership*

A. Each and every report, draft, work product, map, record, and other document reproduced, prepared, or caused to be prepared by the CONTRACTOR pursuant to or in connection with this Agreement shall be the exclusive property of the VILLAGE.

10.14 *Limitations of Liability*

A. Under no circumstances shall either party be liable to the other for any consequential, incidental, special, punitive, or any other form of indirect or non-compensatory damages.

10.15 *Enforcement Costs*

A. All parties shall be responsible for their own attorneys' fees, court costs and expenses if any legal action or other proceeding is brought for any dispute, disagreement, or issue of construction or interpretation arising hereunder whether relating to the Agreement's execution, validity, the obligations provided therein, or performance of this Agreement, or because of an alleged breach, default or misrepresentation in connection with any provisions of this Agreement.

10.16 *Copyrights and/or Patent Rights*

A. CONTRACTOR warrants that there has been no violation of copyrights and/or patent rights in the manufacturing, producing or selling of the goods, shipped or ordered, as a result of this Agreement and the CONTRACTOR agrees to hold the Village harmless from any and all liability, loss, or expense occasioned by any such violation.

10.17 *Protection of Property*

A. The CONTRACTOR shall at all times guard against damage or loss to the property of the VILLAGE or of other vendors or contractors and shall be held responsible for replacing or repairing any such loss or damage. The VILLAGE may withhold payment or make such deductions as deemed necessary to insure reimbursement or replacement for loss or damage to property through negligence of the successful CONTRACTOR or its agents. The

CONTRACTOR shall be responsible to safeguard all of their property such as tools and equipment while on site. The VILLAGE will not be held responsible for any loss of CONTRACTOR property due to theft or vandalism.

10.18 *Damage to Persons or Property*

A. The responsibility for all damage to person or property arising out of or on account of Scope of Work done under this Contract shall rest upon the CONTRACTOR.

10.19 *Discrimination*

A. The CONTRACTOR warrants and represents that all of its employees are treated equally during employment without regard to race, color, religion, disability, sex, age, national origin, ancestry, political affiliation, marital status, handicap, or sexual orientation. Further, CONTRACTOR shall not discriminate or permit discrimination against any employee or an applicant for employment on the basis of race, color, sex, religion, political affiliation, natural origin, ancestry, marital status, sexual orientation or handicap.

10.20 *Construction Defects*

A. PURSUANT TO SECTION 558.005, FLORIDA STATUTES, ANY CLAIMS FOR CONSTRUCTION DEFECTS ARE NOT SUBJECT TO THE NOTICE AND CURE PROVISIONS OF CHAPTER 558, FLORIDA STATUTES.

10.21 *Public Entity Crimes*

Contractor acknowledges and agrees that a person or affiliate who has been placed on the convicted vendor list following a conviction for a public entity crime may not submit a bid, proposal, or reply on a contract to provide any goods or services to a public entity; may not submit a bid, proposal, or reply on a contract with a public entity for the construction or repair of a public building or public work; may not submit bids, proposals, or replies on leases of real property to a public entity; may not be awarded or perform work as a contractor, supplier or sub-contractor under a contract with any public entity; and may not transact business with any public entity in excess of the threshold amount provided in Section 287.017, Florida Statues, for CATEGORY TWO for a period of 36 months following the date of being placed on the convicted vendor list. The Contractor will advise the Village immediately if it becomes aware of any violation of this statute.

10.22 *Scrutinized Companies*

A. Contractor certifies that it and its subcontractors are not on the Scrutinized Companies that Boycott Israel List and are not engaged in the boycott of Israel. Pursuant to section 287.135, Florida Statutes, the City may immediately terminate this Agreement at its sole option if the Contractor or any of its subcontractors are found to have submitted a false certification; or if the Contractor or any of its subcontractors, are placed on the Scrutinized Companies that Boycott Israel List or is engaged in the boycott of Israel during the term of this Agreement.

B. If this Agreement is for one million dollars or more, the Contractor certifies that it and its subcontractors are also not on the Scrutinized Companies with Activities in Sudan List, Scrutinized Companies with Activities in the Iran Petroleum Energy Sector List, or engaged in business operations in Cuba or Syria as identified in Section 287.135, Florida Statutes. Pursuant to Section 287.135, the City may immediately terminate this Agreement at its sole option if the Contractor, or any of its subcontractors are found to have submitted a false certification; or if the Contractor or any of its subcontractors are placed on the Scrutinized Companies with Activities in Sudan List, or Scrutinized Companies with Activities in the Iran Petroleum Energy Sector List, or are or have been engaged with business operations in Cuba or Syria during the term of this Agreement.

C. The Contractor agrees to observe the above requirements for applicable subcontracts entered into for the performance of work under this Agreement.

D. The Contractor agrees that the certifications in this section shall be effective and relied upon by the City for the term of this Agreement, including any and all renewals.

E. The Contractor agrees that if it or any of its subcontractors' status changes in regards to any certification herein, the Contractor shall immediately notify the City of the same.

F. As provided in Subsection 287.135(8), Florida Statutes, if federal law ceases to authorize the above-stated contracting prohibitions then they shall become inoperative.

IN WITNESS WHEREOF, Owner and Contractor have signed this Agreement.

This Agreement will be effective on _____ (which is the Effective Date of the Contract).

| VILLAGE: | CONTRACTOR: |
|---|---|
| By: _____ | By: _____ |
| Title: Mayor | Title: _____ |
| | *(Seal)* |
| Attest: _____ | Attest: _____ |
| Title: Village Clerk | Title: Notary Public |
| Approved as to Form: _____ | |
| Title: Village Attorney | |
| Address for giving notices: | Address for giving notices: |
| 226 Cypress Lane | _____ |
| Palm Springs FL, 33461 | _____ |
| _____ | _____ |
| | License No.: _____ *(where applicable)* |

## NOTICE TO PROCEED

| | | | |
|---|---|---|---|
| Owner: | Village of Palm Springs | Owner's Task Order No.: | |
| Contractor: | | Contractor's Project No.: | |
| Engineer: | Holtz Consulting Engineers, Inc. | Engineer's Project No.: | |
| Project: | Emergency Generator Improvements | Contract Name: | |
| | | Effective Date of Contract: | |

**TO CONTRACTOR:**

Owner hereby notifies Contractor that the Contract Times under the above Contract will commence to run on [_____, 20__].

On that date, Contractor shall start performing its obligations under the Contract Documents. No Work shall be done at the Site prior to such date. In accordance with the Agreement, [the date of Substantial Completion is _____, and the date of readiness for final payment is_____.

Before starting any Work at the Site, Contractor must comply with the following:
*[Note any access limitations, security procedures, or other restrictions]*

Owner**:**

Authorized Signature

By:

Title:

Date Issued:

Copy: Engineer

# PERFORMANCE BOND

CONTRACTOR *(name and address)*:

SURETY *(name and address of principal place of business)*:

OWNER *(name and address)*:

CONSTRUCTION CONTRACT
Effective Date of the Agreement:
Amount:
Description *(name and location)*:

BOND
Bond Number:
Date *(not earlier than the Effective Date of the Agreement of the Construction Contract)*:
Amount:
Modifications to this Bond Form: ☐ None ☐ See Paragraph 16

---

Surety and Contractor, intending to be legally bound hereby, subject to the terms set forth below, do each cause this Performance Bond to be duly executed by an authorized officer, agent, or representative.

**CONTRACTOR AS PRINCIPAL**

_____ *(seal)*
Contractor's Name and Corporate Seal

**By:** _____
Signature

_____
Print Name

_____
Title

**Attest:** _____
Signature

_____
Title

**SURETY**

_____ *(seal)*
Surety's Name and Corporate Seal

**By:** _____
Signature *(attach power of attorney)*

_____
Print Name

_____
Title

**Attest:** _____
Signature

_____
Title

***Notes: (1) Provide supplemental execution by any additional parties, such as joint venturers. (2) Any singular reference to Contractor, Surety, Owner, or other party shall be considered plural where applicable.***


**Copyright © 2013 National Society of Professional Engineers, American Council of Engineering Companies, and American Society of Civil Engineers. All rights reserved.**

1. The Contractor and Surety, jointly and severally, bind themselves, their heirs, executors, administrators, successors, and assigns to the Owner for the performance of the Construction Contract, which is incorporated herein by reference.

2. If the Contractor performs the Construction Contract, the Surety and the Contractor shall have no obligation under this Bond, except when applicable to participate in a conference as provided in Paragraph 3.

3. If there is no Owner Default under the Construction Contract, the Surety's obligation under this Bond shall arise after:

3.1 The Owner first provides notice to the Contractor and the Surety that the Owner is considering declaring a Contractor Default. Such notice shall indicate whether the Owner is requesting a conference among the Owner, Contractor, and Surety to discuss the Contractor's performance. If the Owner does not request a conference, the Surety may, within five (5) business days after receipt of the Owner's notice, request such a conference. If the Surety timely requests a conference, the Owner shall attend. Unless the Owner agrees otherwise, any conference requested under this Paragraph 3.1 shall be held within ten (10) business days of the Surety's receipt of the Owner's notice. If the Owner, the Contractor, and the Surety agree, the Contractor shall be allowed a reasonable time to perform the Construction Contract, but such an agreement shall not waive the Owner's right, if any, subsequently to declare a Contractor Default;

3.2 The Owner declares a Contractor Default, terminates the Construction Contract and notifies the Surety; and

3.3 The Owner has agreed to pay the Balance of the Contract Price in accordance with the terms of the Construction Contract to the Surety or to a contractor selected to perform the Construction Contract.

4. Failure on the part of the Owner to comply with the notice requirement in Paragraph 3.1 shall not constitute a failure to comply with a condition precedent to the Surety's obligations, or release the Surety from its obligations, except to the extent the Surety demonstrates actual prejudice.

5. When the Owner has satisfied the conditions of Paragraph 3, the Surety shall promptly and at the Surety's expense take one of the following actions:

5.1 Arrange for the Contractor, with the consent of the Owner, to perform and complete the Construction Contract;

5.2 Undertake to perform and complete the Construction Contract itself, through its agents or independent contractors;

5.3 Obtain bids or negotiated proposals from qualified contractors acceptable to the Owner for a contract for performance and completion of the Construction Contract, arrange for a contract to be prepared for execution by the Owner and a contractor selected with the Owners concurrence, to be secured with performance and payment bonds executed by a qualified surety equivalent to the bonds issued on the Construction Contract, and pay to the Owner the amount of damages as described in Paragraph 7 in excess of the Balance of the Contract Price incurred by the Owner as a result of the Contractor Default; or

5.4 Waive its right to perform and complete, arrange for completion, or obtain a new contractor, and with reasonable promptness under the circumstances:

5.4.1 After investigation, determine the amount for which it may be liable to the Owner and, as soon as practicable after the amount is determined, make payment to the Owner; or

5.4.2 Deny liability in whole or in part and notify the Owner, citing the reasons for denial.

6. If the Surety does not proceed as provided in Paragraph 5 with reasonable promptness, the Surety shall be deemed to be in default on this Bond seven days after receipt of an additional written notice from the Owner to the Surety demanding that the Surety perform its obligations under this Bond, and the Owner shall be entitled to enforce any remedy available to the Owner. If the Surety proceeds as provided in Paragraph 5.4, and the Owner refuses the payment or the Surety has denied liability, in whole or in part, without further notice the Owner shall be entitled to enforce any remedy available to the Owner.

7. If the Surety elects to act under Paragraph 5.1, 5.2, or 5.3, then the responsibilities of the Surety to the Owner shall not be greater than those of the Contractor under the Construction Contract, and the responsibilities of the Owner to the Surety shall not be greater than those of the Owner under the Construction Contract. Subject to the commitment by the Owner to pay the Balance of the Contract Price, the Surety is obligated, without duplication for:

7.1 the responsibilities of the Contractor for correction of defective work and completion of the Construction Contract;

7.2 additional legal, design professional, and delay costs resulting from the Contractor's Default, and resulting from the actions or failure to act of the Surety under Paragraph 5; and

7.3 liquidated damages, or if no liquidated damages are specified in the Construction Contract, actual damages caused by delayed performance or non-performance of the Contractor.

8. If the Surety elects to act under Paragraph 5.1, 5.3, or 5.4, the Surety's liability is limited to the amount of this Bond.

9. The Surety shall not be liable to the Owner or others for obligations of the Contractor that are unrelated to the Construction Contract, and the Balance of the Contract Price shall not be reduced or set off on account of any such unrelated obligations. No right of action shall accrue on this Bond to any person or entity other than the Owner or its heirs, executors, administrators, successors, and assigns.


**Copyright © 2013 National Society of Professional Engineers, American Council of Engineering Companies, and American Society of Civil Engineers. All rights reserved.**

10. The Surety hereby waives notice of any change, including changes of time, to the Construction Contract or to related subcontracts, purchase orders, and other obligations.

11. Any proceeding, legal or equitable, under this Bond may be instituted in any court of competent jurisdiction in the location in which the work or part of the work is located and shall be instituted within two years after a declaration of Contractor Default or within two years after the Contractor ceased working or within two years after the Surety refuses or fails to perform its obligations under this Bond, whichever occurs first. If the provisions of this paragraph are void or prohibited by law, the minimum periods of limitations available to sureties as a defense in the jurisdiction of the suit shall be applicable.

12. Notice to the Surety, the Owner, or the Contractor shall be mailed or delivered to the address shown on the page on which their signature appears.

13. When this Bond has been furnished to comply with a statutory or other legal requirement in the location where the construction was to be performed, any provision in this Bond conflicting with said statutory or legal requirement shall be deemed deleted here from and provisions conforming to such statutory or other legal requirement shall be deemed incorporated herein. When so furnished, the intent is that this Bond shall be construed as a statutory bond and not as a common law bond.

14. Definitions

14.1 Balance of the Contract Price: The total amount payable by the Owner to the Contractor under the Construction Contract after all proper adjustments have been made including allowance for the Contractor for any amounts received or to be received by the Owner in settlement of insurance or other claims for damages to which the Contractor is entitled, reduced by all valid and proper payments made to or on behalf of the Contractor under the Construction Contract.

14.2 Construction Contract: The agreement between the Owner and Contractor identified on the cover page, including all Contract Documents and changes made to the agreement and the Contract Documents.

14.3 Contractor Default: Failure of the Contractor, which has not been remedied or waived, to perform or otherwise to comply with a material term of the Construction Contract.

14.4 Owner Default: Failure of the Owner, which has not been remedied or waived, to pay the Contractor as required under the Construction Contract or to perform and complete or comply with the other material terms of the Construction Contract.

14.5 Contract Documents: All the documents that comprise the agreement between the Owner and Contractor.

15. If this Bond is issued for an agreement between a contractor and subcontractor, the term Contractor in this Bond shall be deemed to be Subcontractor and the term Owner shall be deemed to be Contractor.

16. Modifications to this Bond are as follows:


**Copyright © 2013 National Society of Professional Engineers, American Council of Engineering Companies, and American Society of Civil Engineers. All rights reserved.**

# PAYMENT BOND

CONTRACTOR *(name and address)*:

SURETY *(name and address of principal place of business)*:

OWNER *(name and address)*:

CONSTRUCTION CONTRACT

Effective Date of the Agreement:
Amount:
Description *(name and location)*:

BOND

Bond Number:
Date *(not earlier than the Effective Date of the Agreement of the Construction Contract)*:
Amount:
Modifications to this Bond Form: ☐ None ☐ See Paragraph 18

---

Surety and Contractor, intending to be legally bound hereby, subject to the terms set forth below, do each cause this Payment Bond to be duly executed by an authorized officer, agent, or representative.

| **CONTRACTOR AS PRINCIPAL** | **SURETY** |
|---|---|
| _____ *(seal)* | _____ *(seal)* |
| Contractor's Name and Corporate Seal | Surety's Name and Corporate Seal |
| **By:** _____ | **By:** _____ |
| Signature | Signature *(attach power of attorney)* |
| _____ | _____ |
| Print Name | Print Name |
| _____ | _____ |
| Title | Title |
| **Attest:** _____ | **Attest:** _____ |
| Signature | Signature |
| _____ | _____ |
| Title | Title |

***Notes: (1) Provide supplemental execution by any additional parties, such as joint venturers. (2) Any singular reference to Contractor, Surety, Owner, or other party shall be considered plural where applicable.***


**Copyright © 2013 National Society of Professional Engineers, American Council of Engineering Companies, and American Society of Civil Engineers. All rights reserved.**

1. The Contractor and Surety, jointly and severally, bind themselves, their heirs, executors, administrators, successors, and assigns to the Owner to pay for labor, materials, and equipment furnished for use in the performance of the Construction Contract, which is incorporated herein by reference, subject to the following terms.

2. If the Contractor promptly makes payment of all sums due to Claimants, and defends, indemnifies, and holds harmless the Owner from claims, demands, liens, or suits by any person or entity seeking payment for labor, materials, or equipment furnished for use in the performance of the Construction Contract, then the Surety and the Contractor shall have no obligation under this Bond.

3. If there is no Owner Default under the Construction Contract, the Surety's obligation to the Owner under this Bond shall arise after the Owner has promptly notified the Contractor and the Surety (at the address described in Paragraph 13) of claims, demands, liens, or suits against the Owner or the Owner's property by any person or entity seeking payment for labor, materials, or equipment furnished for use in the performance of the Construction Contract, and tendered defense of such claims, demands, liens, or suits to the Contractor and the Surety.

4. When the Owner has satisfied the conditions in Paragraph 3, the Surety shall promptly and at the Surety's expense defend, indemnify, and hold harmless the Owner against a duly tendered claim, demand, lien, or suit.

5. The Surety's obligations to a Claimant under this Bond shall arise after the following:

    5.1 Claimants who do not have a direct contract with the Contractor,

        5.1.1 have furnished a written notice of non-payment to the Contractor, stating with substantial accuracy the amount claimed and the name of the party to whom the materials were, or equipment was, furnished or supplied or for whom the labor was done or performed, within ninety (90) days after having last performed labor or last furnished materials or equipment included in the Claim; and

        5.1.2 have sent a Claim to the Surety (at the address described in Paragraph 13).

    5.2 Claimants who are employed by or have a direct contract with the Contractor have sent a Claim to the Surety (at the address described in Paragraph 13).

6. If a notice of non-payment required by Paragraph 5.1.1 is given by the Owner to the Contractor, that is sufficient to satisfy a Claimant's obligation to furnish a written notice of non-payment under Paragraph 5.1.1.

7. When a Claimant has satisfied the conditions of Paragraph 5.1 or 5.2, whichever is applicable, the Surety shall promptly and at the Surety's expense take the following actions:

    7.1 Send an answer to the Claimant, with a copy to the Owner, within sixty (60) days after receipt of the Claim, stating the amounts that are undisputed and the basis for challenging any amounts that are disputed; and

    7.2 Pay or arrange for payment of any undisputed amounts.

    7.3 The Surety's failure to discharge its obligations under Paragraph 7.1 or 7.2 shall not be deemed to constitute a waiver of defenses the Surety or Contractor may have or acquire as to a Claim, except as to undisputed amounts for which the Surety and Claimant have reached agreement. If, however, the Surety fails to discharge its obligations under Paragraph 7.1 or 7.2, the Surety shall indemnify the Claimant for the reasonable attorney's fees the Claimant incurs thereafter to recover any sums found to be due and owing to the Claimant.

8. The Surety's total obligation shall not exceed the amount of this Bond, plus the amount of reasonable attorney's fees provided under Paragraph 7.3, and the amount of this Bond shall be credited for any payments made in good faith by the Surety.

9. Amounts owed by the Owner to the Contractor under the Construction Contract shall be used for the performance of the Construction Contract and to satisfy claims, if any, under any construction performance bond. By the Contractor furnishing and the Owner accepting this Bond, they agree that all funds earned by the Contractor in the performance of the Construction Contract are dedicated to satisfy obligations of the Contractor and Surety under this Bond, subject to the Owner's priority to use the funds for the completion of the work.

10. The Surety shall not be liable to the Owner, Claimants, or others for obligations of the Contractor that are unrelated to the Construction Contract. The Owner shall not be liable for the payment of any costs or expenses of any Claimant under this Bond, and shall have under this Bond no obligation to make payments to or give notice on behalf of Claimants, or otherwise have any obligations to Claimants under this Bond.

11. The Surety hereby waives notice of any change, including changes of time, to the Construction Contract or to related subcontracts, purchase orders, and other obligations.


**Copyright © 2013 National Society of Professional Engineers, American Council of Engineering Companies, and American Society of Civil Engineers. All rights reserved.**

12. No suit or action shall be commenced by a Claimant under this Bond other than in a court of competent jurisdiction in the state in which the project that is the subject of the Construction Contract is located or after the expiration of one year from the date (1) on which the Claimant sent a Claim to the Surety pursuant to Paragraph 5.1.2 or 5.2, or (2) on which the last labor or service was performed by anyone or the last materials or equipment were furnished by anyone under the Construction Contract, whichever of (1) or (2) first occurs. If the provisions of this paragraph are void or prohibited by law, the minimum period of limitation available to sureties as a defense in the jurisdiction of the suit shall be applicable.

13. Notice and Claims to the Surety, the Owner, or the Contractor shall be mailed or delivered to the address shown on the page on which their signature appears. Actual receipt of notice or Claims, however accomplished, shall be sufficient compliance as of the date received.

14. When this Bond has been furnished to comply with a statutory or other legal requirement in the location where the construction was to be performed, any provision in this Bond conflicting with said statutory or legal requirement shall be deemed deleted herefrom and provisions conforming to such statutory or other legal requirement shall be deemed incorporated herein. When so furnished, the intent is that this Bond shall be construed as a statutory bond and not as a common law bond.

15. Upon requests by any person or entity appearing to be a potential beneficiary of this Bond, the Contractor and Owner shall promptly furnish a copy of this Bond or shall permit a copy to be made.

16. **Definitions**

16.1 **Claim:** A written statement by the Claimant including at a minimum:

1. The name of the Claimant;
2. The name of the person for whom the labor was done, or materials or equipment furnished;
3. A copy of the agreement or purchase order pursuant to which labor, materials, or equipment was furnished for use in the performance of the Construction Contract;
4. A brief description of the labor, materials, or equipment furnished;
5. The date on which the Claimant last performed labor or last furnished materials or equipment for use in the performance of the Construction Contract;
6. The total amount earned by the Claimant for labor, materials, or equipment furnished as of the date of the Claim;
7. The total amount of previous payments received by the Claimant; and
8. The total amount due and unpaid to the Claimant for labor, materials, or equipment furnished as of the date of the Claim.

16.2 **Claimant:** An individual or entity having a direct contract with the Contractor or with a subcontractor of the Contractor to furnish labor, materials, or equipment for use in the performance of the Construction Contract. The term Claimant also includes any individual or entity that has rightfully asserted a claim under an applicable mechanic's lien or similar statute against the real property upon which the Project is located. The intent of this Bond shall be to include without limitation in the terms of "labor, materials, or equipment" that part of the water, gas, power, light, heat, oil, gasoline, telephone service, or rental equipment used in the Construction Contract, architectural and engineering services required for performance of the work of the Contractor and the Contractor's subcontractors, and all other items for which a mechanic's lien may be asserted in the jurisdiction where the labor, materials, or equipment were furnished.

16.3 **Construction Contract:** The agreement between the Owner and Contractor identified on the cover page, including all Contract Documents and all changes made to the agreement and the Contract Documents.

16.4 **Owner Default**: Failure of the Owner, which has not been remedied or waived, to pay the Contractor as required under the Construction Contract or to perform and complete or comply with the other material terms of the Construction Contract.

16.5 **Contract Documents:** All the documents that comprise the agreement between the Owner and Contractor.

17. If this Bond is issued for an agreement between a contractor and subcontractor, the term Contractor in this Bond shall be deemed to be Subcontractor and the term Owner shall be deemed to be Contractor.

18. Modifications to this Bond are as follows:


**Copyright © 2013 National Society of Professional Engineers, American Council of Engineering Companies, and American Society of Civil Engineers. All rights reserved.**

# Contractor's Application for Payment No.

| | | |
|---|---|---|
| | Application Period: | Application Date: |
| To (Owner): | From (Contractor): | Via (Engineer): |
| Project: | Contract: | |
| Owner's Contract No.: | Contractor's Project No.: | Engineer's Project No.: |

**Application For Payment**

**Change Order Summary**

Approved Change Orders

| Number | Additions | Deductions |
|---|---|---|
| | | |
| | | |
| | | |
| | | |
| | | |
| | | |
| | | |
| | | |
| TOTALS | | |
| NET CHANGE BY CHANGE ORDERS | | |

**1. ORIGINAL CONTRACT PRICE..... $** _____

**2. Net change by Change Orders..... $** _____

**3. Current Contract Price (Line 1 ± 2)..... $** _____

**4. TOTAL COMPLETED AND STORED TO DATE**
**(Column F total on Progress Estimates)..... $** _____

**5. RETAINAGE:**

**a.** **X** _____ **Work Completed..... $** _____

**b.** **X** _____ **Stored Material..... $** _____

**c. Total Retainage (Line 5.a + Line 5.b)..... $** _____

**6. AMOUNT ELIGIBLE TO DATE (Line 4 - Line 5.c)..... $** _____

**7. LESS PREVIOUS PAYMENTS (Line 6 from prior Application)..... $** _____

**8. AMOUNT DUE THIS APPLICATION..... $** _____

**9. BALANCE TO FINISH, PLUS RETAINAGE**
**(Column G total on Progress Estimates + Line 5.c above)..... $** _____

**Contractor's Certification**

The undersigned Contractor certifies, to the best of its knowledge, the following:
(1) All previous progress payments received from Owner on account of Work done under the Contract have been applied on account to discharge Contractor's legitimate obligations incurred in connection with the Work covered by prior Applications for Payment;
(2) Title to all Work, materials and equipment incorporated in said Work, or otherwise listed in or covered by this Application for Payment, will pass to Owner at time of payment free and clear of all Liens, security interests, and encumbrances (except such as are covered by a bond acceptable to Owner indemnifying Owner against any such Liens, security interest, or encumbrances); and
(3) All the Work covered by this Application for Payment is in accordance with the Contract Documents and is not defective.

**Contractor Signature**

| By: | Date: |
|---|---|
| | |

Payment of: $ _____
(Line 8 or other - attach explanation of the other amount)

is recommended by: _____ _____
(Engineer) (Date)

Payment of: $ _____
(Line 8 or other - attach explanation of the other amount)

is approved by: _____ _____
(Owner) (Date)

Approved by: _____ _____
Funding or Financing Entity (if applicable) (Date)


© 2013 National Society of Professional Engineers for EJCDC. All rights reserved.

## Progress Estimate - Unit Price Work

# Contractor's Application

| For (Contract): | | | | | | | | Application Number: | | | |
|---|---|---|---|---|---|---|---|---|---|---|---|
| Application Period: | | | | | | | | Application Date: | | | |
| A | | | | | B | C | D | E | F | | |
| Item | | Contract Information | | | | Estimated Quantity Installed | Value of Work Installed to Date | Materials Presently Stored (not in C) | Total Completed and Stored to Date (D + E) | % (F / B) | Balance to Finish (B - F) |
| Bid Item No. | Description | Item Quantity | Units | Unit Price | Total Value of Item ($) | | | | | | |
| | | | | | | | | | | | |
| | | | | | | | | | | | |
| | | | | | | | | | | | |
| | | | | | | | | | | | |
| | | | | | | | | | | | |
| | | | | | | | | | | | |
| | | | | | | | | | | | |
| | | | | | | | | | | | |
| | | | | | | | | | | | |
| | | | | | | | | | | | |
| | | | | | | | | | | | |
| | | | | | | | | | | | |
| | | | | | | | | | | | |
| | | | | | | | | | | | |
| | | | | | | | | | | | |
| | | | | | | | | | | | |
| | | | | | | | | | | | |
| | | | | | | | | | | | |
| | | | | | | | | | | | |
| | | | | | | | | | | | |
| | | | | | | | | | | | |
| | | | | | | | | | | | |
| | | | | | | | | | | | |
| | | | | | | | | | | | |
| | | | | | | | | | | | |
| | | | | | | | | | | | |
| | | | | | | | | | | | |
| | | | | | | | | | | | |
| | | | | | | | | | | | |
| | | | | | | | | | | | |
| | | | | | | | | | | | |
| | | | | | | | | | | | |
| | | | | | | | | | | | |
| | | | | | | | | | | | |
| | | | | | | | | | | | |
| | | | | | | | | | | | |
| | | | | | | | | | | | |
| | | | | | | | | | | | |
| | **Totals** | | | | | | | | | | |


© 2013 National Society of Professional Engineers for EJCDC. All rights reserved.

## Stored Material Summary

## Contractor's Application

| For (Contract): | | | | | | | | Application Number: | | | |
|---|---|---|---|---|---|---|---|---|---|---|---|
| Application Period: | | | | | | | | Application Date: | | | |
| A | | B | C | | D | | E | | F | | G |
| Bid Item No. | Supplier Invoice No. | Submittal No. (with Specification Section No.) | Storage Location | Description of Materials or Equipment Stored | Stored Previously | | Amount Stored this Month ($) | Subtotal Amount Completed and Stored to Date (D + E) | Incorporated in Work | | Materials Remaining in Storage ($) (D + E - F) |
| | | | | | Date Placed into Storage (Month/Year) | Amount ($) | | | Date (Month/ Year) | Amount ($) | |
| | | | | | | | | | | | |
| | | | | | | | | | | | |
| | | | | | | | | | | | |
| | | | | | | | | | | | |
| | | | | | | | | | | | |
| | | | | | | | | | | | |
| | | | | | | | | | | | |
| | | | | | | | | | | | |
| | | | | | | | | | | | |
| | | | | | | | | | | | |
| | | | | | | | | | | | |
| | | | | | | | | | | | |
| | | | | | | | | | | | |
| | | | | | | | | | | | |
| | | | | | | | | | | | |
| | | | | | | | | | | | |
| | | | | | | | | | | | |
| | | | | | | | | | | | |
| | | | | | | | | | | | |
| | | | | | | | | | | | |
| | | | | | | | | | | | |
| | | | | | | | | | | | |
| | | | | | | | | | | | |
| | | | | | | | | | | | |
| | | | | | | | | | | | |
| | | | | | | | | | | | |
| | | | | | | | | | | | |
| | | | | | | | | | | | |
| | | | | | | | | | | | |
| | | | | | | | | | | | |
| | | | | | | | | | | | |
| | | | | **Totals** | | | | | | | |


© 2013 National Society of Professional Engineers for EJCDC. All rights reserved.

# CERTIFICATE OF SUBSTANTIAL COMPLETION

| | | | |
|---|---|---|---|
| Owner: | Village of Palm Springs | Owner's Task Order No.: | |
| Contractor: | | Contractor's Project No.: | |
| Engineer: | Holtz Consulting Engineers, Inc. | Engineer's Project No.: | |
| Project: | Emergency Generator Improvements | Contract Name: | |

**This [preliminary] [final] Certificate of Substantial Completion applies to:**

☐ All Work ☐ The following specified portions of the Work:

## Date of Substantial Completion

The Work to which this Certificate applies has been inspected by authorized representatives of Owner, Contractor, and Engineer, and found to be substantially complete. The Date of Substantial Completion of the Work or portion thereof designated above is hereby established, subject to the provisions of the Contract pertaining to Substantial Completion. The date of Substantial Completion in the final Certificate of Substantial Completion marks the commencement of the contractual correction period and applicable warranties required by the Contract.

A punch list of items to be completed or corrected is attached to this Certificate. This list may not be all-inclusive, and the failure to include any items on such list does not alter the responsibility of the Contractor to complete all Work in accordance with the Contract.

The responsibilities between Owner and Contractor for security, operation, safety, maintenance, heat, utilities, insurance, and warranties upon Owner's use or occupancy of the Work shall be as provided in the Contract, except as amended as follows: *[Note: Amendments of contractual responsibilities recorded in this Certificate should be the product of mutual agreement of Owner and Contractor; see Paragraph 15.03.D of the General Conditions.]*

Amendments to Owner's responsibilities: ☐ None ☐ As follows

Amendments to Contractor's responsibilities: ☐ None ☐ As follows:

The following documents are attached to and made a part of this Certificate: *[punch list; others]*

This Certificate does not constitute an acceptance of Work not in accordance with the Contract Documents, nor is it a release of Contractor's obligation to complete the Work in accordance with the Contract.

| EXECUTED BY ENGINEER: | RECEIVED: | RECEIVED: |
|---|---|---|
| By: _____ (Authorized signature) | By: _____ Owner (Authorized Signature) | By: _____ Contractor (Authorized Signature) |
| Title: _____ | Title: _____ | Title: _____ |
| Date: _____ | Date: _____ | Date: _____ |

This document has important legal consequences; consultation with an attorney is encouraged with respect to its use or modification. This document should be adapted to the particular circumstances of the contemplated Project and the controlling Laws and Regulations.

# STANDARD GENERAL CONDITIONS OF THE CONSTRUCTION CONTRACT

Prepared by

EJCDC®
ENGINEERS JOINT CONTRACT DOCUMENTS COMMITTEE

Issued and Published Jointly by

ACEC
AMERICAN COUNCIL OF ENGINEERING COMPANIES

ASCE
AMERICAN SOCIETY OF CIVIL ENGINEERS

National Society of Professional Engineers®

**Endorsed by**

CSI NUCA
REPRESENTING UTILITY & EXCAVATION CONTRACTORS

**EJCDC® 00700 (Rev. 1), Standard General Conditions of the Construction Contract.**
**Copyright © 2013 National Society of Professional Engineers, American Council of Engineering Companies, and American Society of Civil Engineers. All rights reserved.**

These General Conditions have been prepared for use with the Agreement Between Owner and Contractor for Construction Contract (EJCDC® C-520, Stipulated Sum, or C-525, Cost-Plus, 2013 Editions). Their provisions are interrelated and a change in one may necessitate a change in the other.

To prepare supplementary conditions that are coordinated with the General Conditions, use EJCDC's Guide to the Preparation of Supplementary Conditions (EJCDC® C-800, 2013 Edition). The full EJCDC Construction series of documents is discussed in the Commentary on the 2013 EJCDC Construction Documents (EJCDC® C-001, 2013 Edition).

Copyright © 2013:

National Society of Professional Engineers

1420 King Street, Alexandria, VA 22314-2794

(703) 684-2882

www.nspe.org

American Council of Engineering Companies

1015 15th Street N.W., Washington, DC 20005

(202) 347-7474

www.acec.org

American Society of Civil Engineers

1801 Alexander Bell Drive, Reston, VA 20191-4400

(800) 548-2723

www.asce.org

The copyright for this document is owned jointly by the three sponsoring organizations listed above. The National Society of Professional Engineers is the Copyright Administrator for the EJCDC documents; please direct all inquiries regarding EJCDC copyrights to NSPE.

NOTE: EJCDC publications may be purchased at www.ejcdc.org, or from any of the sponsoring organizations above.


**Copyright © 2013 National Society of Professional Engineers, American Council of Engineering Companies, and American Society of Civil Engineers. All rights reserved.**

# STANDARD GENERAL CONDITIONS OF THE CONSTRUCTION CONTRACT

## TABLE OF CONTENTS


Page

Article 1 – Definitions and Terminology ..... 1

1.01 Defined Terms ..... 1

1.02 Terminology ..... 5

Article 2 – Preliminary Matters ..... 6

2.01 Delivery of Bonds and Evidence of Insurance ..... 6

2.02 Copies of Documents ..... 6

2.03 Before Starting Construction ..... 6

2.04 Preconstruction Conference; Designation of Authorized Representatives ..... 7

2.05 Initial Acceptance of Schedules ..... 7

2.06 Electronic Transmittals ..... 7

Article 3 – Documents: Intent, Requirements, Reuse ..... 8

3.01 Intent ..... 8

3.02 Reference Standards ..... 8

3.03 Reporting and Resolving Discrepancies ..... 8

3.04 Requirements of the Contract Documents ..... 9

3.05 Reuse of Documents ..... 10

Article 4 – Commencement and Progress of the Work ..... 10

4.01 Commencement of Contract Times; Notice to Proceed ..... 10

4.02 Starting the Work ..... 10

4.03 Reference Points ..... 10

4.04 Progress Schedule ..... 10

4.05 Delays in Contractor's Progress ..... 11

Article 5 – Availability of Lands; Subsurface and Physical Conditions; Hazardous Environmental Conditions ..... 12

5.01 Availability of Lands ..... 12

5.02 Use of Site and Other Areas ..... 12

5.03 Subsurface and Physical Conditions ..... 13

5.04 Differing Subsurface or Physical Conditions ..... 14

5.05 Underground Facilities ..... 15




**Copyright © 2013 National Society of Professional Engineers, American Council of Engineering Companies, and American Society of Civil Engineers. All rights reserved.**

5.06 Hazardous Environmental Conditions at Site ..... 17
Article 6 – Bonds and Insurance ..... 19
6.01 Performance, Payment, and Other Bonds ..... 19
6.02 Insurance—General Provisions ..... 19
6.03 Contractor's Insurance ..... 20
6.04 Owner's Liability Insurance ..... 23
6.05 Property Insurance ..... 23
6.06 Waiver of Rights ..... 25
6.07 Receipt and Application of Property Insurance Proceeds ..... 25
Article 7 – Contractor's Responsibilities ..... 26
7.01 Supervision and Superintendence ..... 26
7.02 Labor; Working Hours ..... 26
7.03 Services, Materials, and Equipment ..... 26
7.04 "Or Equals" ..... 27
7.05 Substitutes ..... 28
7.06 Concerning Subcontractors, Suppliers, and Others ..... 29
7.07 Patent Fees and Royalties ..... 31
7.08 Permits ..... 31
7.09 Taxes ..... 32
7.10 Laws and Regulations ..... 32
7.11 Record Documents ..... 32
7.12 Safety and Protection ..... 32
7.13 Safety Representative ..... 33
7.14 Hazard Communication Programs ..... 33
7.15 Emergencies ..... 34
7.16 Shop Drawings, Samples, and Other Submittals ..... 34
7.17 Contractor's General Warranty and Guarantee ..... 36
7.18 Indemnification ..... 37
7.19 Delegation of Professional Design Services ..... 37
Article 8 – Other Work at the Site ..... 38
8.01 Other Work ..... 38
8.02 Coordination ..... 39
8.03 Legal Relationships ..... 39


**Copyright © 2013 National Society of Professional Engineers, American Council of Engineering Companies, and American Society of Civil Engineers. All rights reserved.** 

Article 9 – Owner's Responsibilities ..... 40
9.01 Communications to Contractor ..... 40
9.02 Replacement of Engineer ..... 40
9.03 Furnish Data ..... 40
9.04 Pay When Due ..... 40
9.05 Lands and Easements; Reports, Tests, and Drawings ..... 40
9.06 Insurance ..... 40
9.07 Change Orders ..... 40
9.08 Inspections, Tests, and Approvals ..... 41
9.09 Limitations on Owner's Responsibilities ..... 41
9.10 Undisclosed Hazardous Environmental Condition ..... 41
9.11 Evidence of Financial Arrangements ..... 41
9.12 Safety Programs ..... 41
Article 10 – Engineer's Status During Construction ..... 41
10.01 Owner's Representative ..... 41
10.02 Visits to Site ..... 41
10.03 Project Representative ..... 42
10.04 Rejecting Defective Work ..... 42
10.05 Shop Drawings, Change Orders and Payments ..... 42
10.06 Determinations for Unit Price Work ..... 42
10.07 Decisions on Requirements of Contract Documents and Acceptability of Work ..... 42
10.08 Limitations on Engineer's Authority and Responsibilities ..... 42
10.09 Compliance with Safety Program ..... 43
Article 11 – Amending the Contract Documents; Changes in the Work ..... 43
11.01 Amending and Supplementing Contract Documents ..... 43
11.02 Owner-Authorized Changes in the Work ..... 44
11.03 Unauthorized Changes in the Work ..... 44
11.04 Change of Contract Price ..... 44
11.05 Change of Contract Times ..... 45
11.06 Change Proposals ..... 45
11.07 Execution of Change Orders ..... 46
11.08 Notification to Surety ..... 47
Article 12 – Claims ..... 47


**Copyright © 2013 National Society of Professional Engineers, American Council of Engineering Companies, and American Society of Civil Engineers. All rights reserved.** 

12.01 Claims ..... 47
Article 13 – Cost of the Work; Allowances; Unit Price Work ..... 48
13.01 Cost of the Work ..... 48
13.02 Allowances ..... 50
13.03 Unit Price Work ..... 51
Article 14 – Tests and Inspections; Correction, Removal or Acceptance of Defective Work ..... 52
14.01 Access to Work ..... 52
14.02 Tests, Inspections, and Approvals ..... 52
14.03 Defective Work ..... 53
14.04 Acceptance of Defective Work ..... 53
14.05 Uncovering Work ..... 53
14.06 Owner May Stop the Work ..... 54
14.07 Owner May Correct Defective Work ..... 54
Article 15 – Payments to Contractor; Set-Offs; Completion; Correction Period ..... 55
15.01 Progress Payments ..... 55
15.02 Contractor's Warranty of Title ..... 58
15.03 Substantial Completion ..... 58
15.04 Partial Use or Occupancy ..... 59
15.05 Final Inspection ..... 59
15.06 Final Payment ..... 59
15.07 Waiver of Claims ..... 61
15.08 Correction Period ..... 61
Article 16 – Suspension of Work and Termination ..... 62
16.01 Owner May Suspend Work ..... 62
16.02 Owner May Terminate for Cause ..... 62
16.03 Owner May Terminate For Convenience ..... 63
16.04 Contractor May Stop Work or Terminate ..... 63
Article 17 – Final Resolution of Disputes ..... 64
17.01 Methods and Procedures ..... 64
Article 18 – Miscellaneous ..... 64
18.01 Giving Notice ..... 64
18.02 Computation of Times ..... 64
18.03 Cumulative Remedies ..... 64


**Copyright © 2013 National Society of Professional Engineers, American Council of Engineering Companies, and American Society of Civil Engineers. All rights reserved.**

18.04 Limitation of Damages ..... 65
18.05 No Waiver ..... 65
18.06 Survival of Obligations ..... 65
18.07 Controlling Law ..... 65
18.08 Headings ..... 65


Copyright © 2013 National Society of Professional Engineers, American Council of Engineering Companies, and American Society of Civil Engineers. All rights reserved. 

**ARTICLE 1 – DEFINITIONS AND TERMINOLOGY**

*1.01 Defined Terms*

A. Wherever used in the Bidding Requirements or Contract Documents, a term printed with initial capital letters, including the term's singular and plural forms, will have the meaning indicated in the definitions below. In addition to terms specifically defined, terms with initial capital letters in the Contract Documents include references to identified articles and paragraphs, and the titles of other documents or forms.

1. *Addenda*—Written or graphic instruments issued prior to the opening of Bids which clarify, correct, or change the Bidding Requirements or the proposed Contract Documents.

2. *Agreement*—The written instrument, executed by Owner and Contractor, that sets forth the Contract Price and Contract Times, identifies the parties and the Engineer, and designates the specific items that are Contract Documents.

3. *Application for Payment*—The form acceptable to Engineer which is to be used by Contractor during the course of the Work in requesting progress or final payments and which is to be accompanied by such supporting documentation as is required by the Contract Documents.

4. *Bid*—The offer of a Bidder submitted on the prescribed form setting forth the prices for the Work to be performed.

5. *Bidder*—An individual or entity that submits a Bid to Owner.

6. *Bidding Documents*—The Bidding Requirements, the proposed Contract Documents, and all Addenda.

7. *Bidding Requirements*—The advertisement or invitation to bid, Instructions to Bidders, Bid Bond or other Bid security, if any, the Bid Form, and the Bid with any attachments.

8. *Change Order*—A document which is signed by Contractor and Owner and authorizes an addition, deletion, or revision in the Work or an adjustment in the Contract Price or the Contract Times, or other revision to the Contract, issued on or after the Effective Date of the Contract.

9. *Change Proposal*—A written request by Contractor, duly submitted in compliance with the procedural requirements set forth herein, seeking an adjustment in Contract Price or Contract Times, or both; contesting an initial decision by Engineer concerning the requirements of the Contract Documents or the acceptability of Work under the Contract Documents; challenging a set-off against payments due; or seeking other relief with respect to the terms of the Contract.

10. *Claim*—(a) A demand or assertion by Owner directly to Contractor, duly submitted in compliance with the procedural requirements set forth herein: seeking an adjustment of Contract Price or Contract Times, or both; contesting an initial decision by Engineer concerning the requirements of the Contract Documents or the acceptability of Work under the Contract Documents; contesting Engineer's decision regarding a Change Proposal; seeking resolution of a contractual issue that Engineer has declined to address; or seeking other relief with respect to the terms of the Contract; or (b) a demand or assertion by Contractor directly to Owner, duly submitted in compliance with the procedural requirements set forth herein, contesting Engineer's decision regarding a Change Proposal; or seeking resolution of a contractual issue that Engineer


**Copyright © 2013 National Society of Professional Engineers, American Council of Engineering Companies, and American Society of Civil Engineers. All rights reserved.**

has declined to address. A demand for money or services by a third party is not a Claim.

11. *Constituent of Concern*—Asbestos, petroleum, radioactive materials, polychlorinated biphenyls (PCBs), hazardous waste, and any substance, product, waste, or other material of any nature whatsoever that is or becomes listed, regulated, or addressed pursuant to (a) the Comprehensive Environmental Response, Compensation and Liability Act, 42 U.S.C. §§9601 et seq. ("CERCLA"); (b) the Hazardous Materials Transportation Act, 49 U.S.C. §§5101 et seq.; (c) the Resource Conservation and Recovery Act, 42 U.S.C. §§6901 et seq. ("RCRA"); (d) the Toxic Substances Control Act, 15 U.S.C. §§2601 et seq.; (e) the Clean Water Act, 33 U.S.C. §§1251 et seq.; (f) the Clean Air Act, 42 U.S.C. §§7401 et seq.; or (g) any other federal, state, or local statute, law, rule, regulation, ordinance, resolution, code, order, or decree regulating, relating to, or imposing liability or standards of conduct concerning, any hazardous, toxic, or dangerous waste, substance, or material.

12. *Contract*—The entire and integrated written contract between the Owner and Contractor concerning the Work.

13. *Contract Documents*—Those items so designated in the Agreement, and which together comprise the Contract.

14. *Contract Price*—The money that Owner has agreed to pay Contractor for completion of the Work in accordance with the Contract Documents. .

15. *Contract Times*—The number of days or the dates by which Contractor shall: (a) achieve Milestones, if any; (b) achieve Substantial Completion; and (c) complete the Work.

16. *Contractor*—The individual or entity with which Owner has contracted for performance of the Work.

17. *Cost of the Work*—See Paragraph 13.01 for definition.

18. *Drawings*—The part of the Contract that graphically shows the scope, extent, and character of the Work to be performed by Contractor.

19. *Effective Date of the Contract*—The date, indicated in the Agreement, on which the Contract becomes effective.

20. *Engineer*—The individual or entity named as such in the Agreement.

21. *Field Order*—A written order issued by Engineer which requires minor changes in the Work but does not change the Contract Price or the Contract Times.

22. *Hazardous Environmental Condition*—The presence at the Site of Constituents of Concern in such quantities or circumstances that may present a danger to persons or property exposed thereto. The presence at the Site of materials that are necessary for the execution of the Work, or that are to be incorporated in the Work, and that are controlled and contained pursuant to industry practices, Laws and Regulations, and the requirements of the Contract, does not establish a Hazardous Environmental Condition.

23. *Laws and Regulations; Laws or Regulations*—Any and all applicable laws, statutes, rules, regulations, ordinances, codes, and orders of any and all governmental bodies, agencies, authorities, and courts having jurisdiction.


**Copyright © 2013 National Society of Professional Engineers, American Council of Engineering Companies, and American Society of Civil Engineers. All rights reserved.**

24. *Liens*—Charges, security interests, or encumbrances upon Contract-related funds, real property, or personal property.

25. *Milestone*—A principal event in the performance of the Work that the Contract requires Contractor to achieve by an intermediate completion date or by a time prior to Substantial Completion of all the Work.

26. *Notice of Award*—The written notice by Owner to a Bidder of Owner's acceptance of the Bid.

27. *Notice to Proceed*—A written notice by Owner to Contractor fixing the date on which the Contract Times will commence to run and on which Contractor shall start to perform the Work.

28. *Owner*—The individual or entity with which Contractor has contracted regarding the Work, and which has agreed to pay Contractor for the performance of the Work, pursuant to the terms of the Contract.

29. *Progress Schedule*—A schedule, prepared and maintained by Contractor, describing the sequence and duration of the activities comprising the Contractor's plan to accomplish the Work within the Contract Times.

30. *Project*—The total undertaking to be accomplished for Owner by engineers, contractors, and others, including planning, study, design, construction, testing, commissioning, and start-up, and of which the Work to be performed under the Contract Documents is a part.

31. *Project Manual*—The written documents prepared for, or made available for, procuring and constructing the Work, including but not limited to the Bidding Documents or other construction procurement documents, geotechnical and existing conditions information, the Agreement, bond forms, General Conditions, Supplementary Conditions, and Specifications. The contents of the Project Manual may be bound in one or more volumes.

32. *Resident Project Representative*—The authorized representative of Engineer assigned to assist Engineer at the Site. As used herein, the term Resident Project Representative or "RPR" includes any assistants or field staff of Resident Project Representative.

33. *Samples*—Physical examples of materials, equipment, or workmanship that are representative of some portion of the Work and that establish the standards by which such portion of the Work will be judged.

34. *Schedule of Submittals*—A schedule, prepared and maintained by Contractor, of required submittals and the time requirements for Engineer's review of the submittals and the performance of related construction activities.

35. *Schedule of Values*—A schedule, prepared and maintained by Contractor, allocating portions of the Contract Price to various portions of the Work and used as the basis for reviewing Contractor's Applications for Payment.

36. *Shop Drawings*—All drawings, diagrams, illustrations, schedules, and other data or information that are specifically prepared or assembled by or for Contractor and submitted by Contractor to illustrate some portion of the Work. Shop Drawings, whether approved or not, are not Drawings and are not Contract Documents.


**Copyright © 2013 National Society of Professional Engineers, American Council of Engineering Companies, and American Society of Civil Engineers. All rights reserved.**

37. *Site*—Lands or areas indicated in the Contract Documents as being furnished by Owner upon which the Work is to be performed, including rights-of-way and easements, and such other lands furnished by Owner which are designated for the use of Contractor.

38. *Specifications*—The part of the Contract that consists of written requirements for materials, equipment, systems, standards, and workmanship as applied to the Work, and certain administrative requirements and procedural matters applicable to the Work.

39. *Subcontractor*—An individual or entity having a direct contract with Contractor or with any other Subcontractor for the performance of a part of the Work.

40. *Substantial Completion*—The time at which the Work (or a specified part thereof) has progressed to the point where, in the opinion of Engineer, the Work (or a specified part thereof) is sufficiently complete, in accordance with the Contract Documents, so that the Work (or a specified part thereof) can be utilized for the purposes for which it is intended. The terms "substantially complete" and "substantially completed" as applied to all or part of the Work refer to Substantial Completion thereof.

41. *Successful Bidder*—The Bidder whose Bid the Owner accepts, and to which the Owner makes an award of contract, subject to stated conditions.

42. *Supplementary Conditions*—The part of the Contract that amends or supplements these General Conditions.

43. *Supplier*—A manufacturer, fabricator, supplier, distributor, materialman, or vendor having a direct contract with Contractor or with any Subcontractor to furnish materials or equipment to be incorporated in the Work by Contractor or a Subcontractor.

44. *Technical Data*—Those items expressly identified as Technical Data in the Supplementary Conditions, with respect to either (a) subsurface conditions at the Site, or physical conditions relating to existing surface or subsurface structures at the Site (except Underground Facilities) or (b) Hazardous Environmental Conditions at the Site. If no such express identifications of Technical Data have been made with respect to conditions at the Site, then the data contained in boring logs, recorded measurements of subsurface water levels, laboratory test results, and other factual, objective information regarding conditions at the Site that are set forth in any geotechnical or environmental report prepared for the Project and made available to Contractor are hereby defined as Technical Data with respect to conditions at the Site under Paragraphs 5.03, 5.04, and 5.06.

45. *Underground Facilities*—All underground pipelines, conduits, ducts, cables, wires, manholes, vaults, tanks, tunnels, or other such facilities or attachments, and any encasements containing such facilities, including but not limited to those that convey electricity, gases, steam, liquid petroleum products, telephone or other communications, fiber optic transmissions, cable television, water, wastewater, storm water, other liquids or chemicals, or traffic or other control systems.

46. *Unit Price Work*—Work to be paid for on the basis of unit prices.

47. *Work*—The entire construction or the various separately identifiable parts thereof required to be provided under the Contract Documents. Work includes and is the result of performing or providing all labor, services, and documentation necessary to produce such construction; furnishing, installing, and incorporating all materials and equipment into such construction; and may include related services such as testing, start-up, and commissioning, all as required by the Contract Documents.


**Copyright © 2013 National Society of Professional Engineers, American Council of Engineering Companies, and American Society of Civil Engineers. All rights reserved.**

48. *Work Change Directive*—A written directive to Contractor issued on or after the Effective Date of the Contract, signed by Owner and recommended by Engineer, ordering an addition, deletion, or revision in the Work.

*1.02 Terminology*

A. The words and terms discussed in the following paragraphs are not defined but, when used in the Bidding Requirements or Contract Documents, have the indicated meaning.

B. *Intent of Certain Terms or Adjectives*:

1. The Contract Documents include the terms "as allowed," "as approved," "as ordered," "as directed" or terms of like effect or import to authorize an exercise of professional judgment by Engineer. In addition, the adjectives "reasonable," "suitable," "acceptable," "proper," "satisfactory," or adjectives of like effect or import are used to describe an action or determination of Engineer as to the Work. It is intended that such exercise of professional judgment, action, or determination will be solely to evaluate, in general, the Work for compliance with the information in the Contract Documents and with the design concept of the Project as a functioning whole as shown or indicated in the Contract Documents (unless there is a specific statement indicating otherwise). The use of any such term or adjective is not intended to and shall not be effective to assign to Engineer any duty or authority to supervise or direct the performance of the Work, or any duty or authority to undertake responsibility contrary to the provisions of Article 10 or any other provision of the Contract Documents.

C. *Day*:

1. The word "day" means a calendar day of 24 hours measured from midnight to the next midnight.

D. *Defective*:

1. The word "defective," when modifying the word "Work," refers to Work that is unsatisfactory, faulty, or deficient in that it:

a. does not conform to the Contract Documents; or

b. does not meet the requirements of any applicable inspection, reference standard, test, or approval referred to in the Contract Documents; or

c. has been damaged prior to Engineer's recommendation of final payment (unless responsibility for the protection thereof has been assumed by Owner at Substantial Completion in accordance with Paragraph 15.03 or 15.04).

E. *Furnish, Install, Perform, Provide*:

1. The word "furnish," when used in connection with services, materials, or equipment, shall mean to supply and deliver said services, materials, or equipment to the Site (or some other specified location) ready for use or installation and in usable or operable condition.

2. The word "install," when used in connection with services, materials, or equipment, shall mean to put into use or place in final position said services, materials, or equipment complete and ready for intended use.


**Copyright © 2013 National Society of Professional Engineers, American Council of Engineering Companies, and American Society of Civil Engineers. All rights reserved.**

3. The words “perform” or “provide,” when used in connection with services, materials, or equipment, shall mean to furnish and install said services, materials, or equipment complete and ready for intended use.

4. If the Contract Documents establish an obligation of Contractor with respect to specific services, materials, or equipment, but do not expressly use any of the four words “furnish,” “install,” “perform,” or “provide,” then Contractor shall furnish and install said services, materials, or equipment complete and ready for intended use.

F. Unless stated otherwise in the Contract Documents, words or phrases that have a well-known technical or construction industry or trade meaning are used in the Contract Documents in accordance with such recognized meaning.

**ARTICLE 2 – PRELIMINARY MATTERS**

*2.01 Delivery of Bonds and Evidence of Insurance*

A. *Bonds*: When Contractor delivers the executed counterparts of the Agreement to Owner, Contractor shall also deliver to Owner such bonds as Contractor may be required to furnish.

B. *Evidence of Contractor’s Insurance*: When Contractor delivers the executed counterparts of the Agreement to Owner, Contractor shall also deliver to Owner, with copies to each named insured and additional insured (as identified in the Supplementary Conditions or elsewhere in the Contract), the certificates and other evidence of insurance required to be provided by Contractor in accordance with Article 6.

C. *Evidence of Owner’s Insurance*: After receipt of the executed counterparts of the Agreement and all required bonds and insurance documentation, Owner shall promptly deliver to Contractor, with copies to each named insured and additional insured (as identified in the Supplementary Conditions or otherwise), the certificates and other evidence of insurance required to be provided by Owner under Article 6.

*2.02 Copies of Documents*

A. Owner shall furnish to Contractor four printed copies of the Contract (including one fully executed counterpart of the Agreement), and one copy in electronic portable document format (PDF). Additional printed copies will be furnished upon request at the cost of reproduction.

B. Owner shall maintain and safeguard at least one original printed record version of the Contract, including Drawings and Specifications signed and sealed by Engineer and other design professionals. Owner shall make such original printed record version of the Contract available to Contractor for review. Owner may delegate the responsibilities under this provision to Engineer.

*2.03 Before Starting Construction*

A. *Preliminary Schedules*: Within 10 days after the Effective Date of the Contract (or as otherwise specifically required by the Contract Documents), Contractor shall submit to Engineer for timely review:

1. a preliminary Progress Schedule indicating the times (numbers of days or dates) for starting and completing the various stages of the Work, including any Milestones specified in the Contract;

2. a preliminary Schedule of Submittals; and


**Copyright © 2013 National Society of Professional Engineers, American Council of Engineering Companies, and American Society of Civil Engineers. All rights reserved.**

3. a preliminary Schedule of Values for all of the Work which includes quantities and prices of items which when added together equal the Contract Price and subdivides the Work into component parts in sufficient detail to serve as the basis for progress payments during performance of the Work. Such prices will include an appropriate amount of overhead and profit applicable to each item of Work.

*2.04 Preconstruction Conference; Designation of Authorized Representatives*

A. Before any Work at the Site is started, a conference attended by Owner, Contractor, Engineer, and others as appropriate will be held to establish a working understanding among the parties as to the Work and to discuss the schedules referred to in Paragraph 2.03.A, procedures for handling Shop Drawings, Samples, and other submittals, processing Applications for Payment, electronic or digital transmittals, and maintaining required records.

B. At this conference Owner and Contractor each shall designate, in writing, a specific individual to act as its authorized representative with respect to the services and responsibilities under the Contract. Such individuals shall have the authority to transmit and receive information, render decisions relative to the Contract, and otherwise act on behalf of each respective party.

*2.05 Initial Acceptance of Schedules*

A. At least 10 days before submission of the first Application for Payment a conference, attended by Contractor, Engineer, and others as appropriate, will be held to review for acceptability to Engineer as provided below the schedules submitted in accordance with Paragraph 2.03.A. Contractor shall have an additional 10 days to make corrections and adjustments and to complete and resubmit the schedules. No progress payment shall be made to Contractor until acceptable schedules are submitted to Engineer.

1. The Progress Schedule will be acceptable to Engineer if it provides an orderly progression of the Work to completion within the Contract Times. Such acceptance will not impose on Engineer responsibility for the Progress Schedule, for sequencing, scheduling, or progress of the Work, nor interfere with or relieve Contractor from Contractor's full responsibility therefor.

2. Contractor's Schedule of Submittals will be acceptable to Engineer if it provides a workable arrangement for reviewing and processing the required submittals.

3. Contractor's Schedule of Values will be acceptable to Engineer as to form and substance if it provides a reasonable allocation of the Contract Price to the component parts of the Work.

*2.06 Electronic Transmittals*

A. Except as otherwise stated elsewhere in the Contract, the Owner, Engineer, and Contractor may transmit, and shall accept, Project-related correspondence, text, data, documents, drawings, information, and graphics, including but not limited to Shop Drawings and other submittals, in electronic media or digital format, either directly, or through access to a secure Project website.

B. If the Contract does not establish protocols for electronic or digital transmittals, then Owner, Engineer, and Contractor shall jointly develop such protocols.

C. When transmitting items in electronic media or digital format, the transmitting party makes no representations as to long term compatibility, usability, or readability of the items resulting from the recipient's use of software application packages, operating systems, or


**Copyright © 2013 National Society of Professional Engineers, American Council of Engineering Companies, and American Society of Civil Engineers. All rights reserved.**

computer hardware differing from those used in the drafting or transmittal of the items, or from those established in applicable transmittal protocols.

**ARTICLE 3 – DOCUMENTS: INTENT, REQUIREMENTS, REUSE**

*3.01 Intent*

A. The Contract Documents are complementary; what is required by one is as binding as if required by all.

B. It is the intent of the Contract Documents to describe a functionally complete project (or part thereof) to be constructed in accordance with the Contract Documents.

C. Unless otherwise stated in the Contract Documents, if there is a discrepancy between the electronic or digital versions of the Contract Documents (including any printed copies derived from such electronic or digital versions) and the printed record version, the printed record version shall govern.

D. The Contract supersedes prior negotiations, representations, and agreements, whether written or oral.

E. Engineer will issue clarifications and interpretations of the Contract Documents as provided herein.

*3.02 Reference Standards*

A. Standards Specifications, Codes, Laws and Regulations

1. Reference in the Contract Documents to standard specifications, manuals, reference standards, or codes of any technical society, organization, or association, or to Laws or Regulations, whether such reference be specific or by implication, shall mean the standard specification, manual, reference standard, code, or Laws or Regulations in effect at the time of opening of Bids (or on the Effective Date of the Contract if there were no Bids), except as may be otherwise specifically stated in the Contract Documents.

2. No provision of any such standard specification, manual, reference standard, or code, or any instruction of a Supplier, shall be effective to change the duties or responsibilities of Owner, Contractor, or Engineer, or any of their subcontractors, consultants, agents, or employees, from those set forth in the part of the Contract Documents prepared by or for Engineer. No such provision or instruction shall be effective to assign to Owner, Engineer, or any of their officers, directors, members, partners, employees, agents, consultants, or subcontractors, any duty or authority to supervise or direct the performance of the Work or any duty or authority to undertake responsibility inconsistent with the provisions of the part of the Contract Documents prepared by or for Engineer.

*3.03 Reporting and Resolving Discrepancies*

A. *Reporting Discrepancies*:

1. *Contractor's Verification of Figures and Field Measurements*: Before undertaking each part of the Work, Contractor shall carefully study the Contract Documents, and check and verify pertinent figures and dimensions therein, particularly with respect to applicable field measurements. Contractor shall promptly report in writing to Engineer any conflict, error, ambiguity, or discrepancy that Contractor discovers, or has actual knowledge of, and shall not proceed with any Work affected thereby until the conflict,


Copyright © 2013 National Society of Professional Engineers, American Council of Engineering Companies, and American Society of Civil Engineers. All rights reserved.

error, ambiguity, or discrepancy is resolved, by a clarification or interpretation by Engineer, or by an amendment or supplement to the Contract Documents issued pursuant to Paragraph 11.01.

2. *Contractor's Review of Contract Documents*: If, before or during the performance of the Work, Contractor discovers any conflict, error, ambiguity, or discrepancy within the Contract Documents, or between the Contract Documents and (a) any applicable Law or Regulation, (b) actual field conditions, (c) any standard specification, manual, reference standard, or code, or (d) any instruction of any Supplier, then Contractor shall promptly report it to Engineer in writing. Contractor shall not proceed with the Work affected thereby (except in an emergency as required by Paragraph 7.15) until the conflict, error, ambiguity, or discrepancy is resolved, by a clarification or interpretation by Engineer, or by an amendment or supplement to the Contract Documents issued pursuant to Paragraph 11.01.

3. Contractor shall not be liable to Owner or Engineer for failure to report any conflict, error, ambiguity, or discrepancy in the Contract Documents unless Contractor had actual knowledge thereof.

B. *Resolving Discrepancies*:

1. Except as may be otherwise specifically stated in the Contract Documents, the provisions of the part of the Contract Documents prepared by or for Engineer shall take precedence in resolving any conflict, error, ambiguity, or discrepancy between such provisions of the Contract Documents and:

a. the provisions of any standard specification, manual, reference standard, or code, or the instruction of any Supplier (whether or not specifically incorporated by reference as a Contract Document); or

b. the provisions of any Laws or Regulations applicable to the performance of the Work (unless such an interpretation of the provisions of the Contract Documents would result in violation of such Law or Regulation).

*3.04 Requirements of the Contract Documents*

A. During the performance of the Work and until final payment, Contractor and Owner shall submit to the Engineer all matters in question concerning the requirements of the Contract Documents (sometimes referred to as requests for information or interpretation—RFIs), or relating to the acceptability of the Work under the Contract Documents, as soon as possible after such matters arise. Engineer will be the initial interpreter of the requirements of the Contract Documents, and judge of the acceptability of the Work thereunder.

B. Engineer will, with reasonable promptness, render a written clarification, interpretation, or decision on the issue submitted, or initiate an amendment or supplement to the Contract Documents. Engineer's written clarification, interpretation, or decision will be final and binding on Contractor, unless it appeals by submitting a Change Proposal, and on Owner, unless it appeals by filing a Claim.

C. If a submitted matter in question concerns terms and conditions of the Contract Documents that do not involve (1) the performance or acceptability of the Work under the Contract Documents, (2) the design (as set forth in the Drawings, Specifications, or otherwise), or (3) other engineering or technical matters, then Engineer will promptly give written notice to Owner and Contractor that Engineer is unable to provide a decision or interpretation. If Owner and Contractor are unable to agree on resolution of such a matter in question, either party may pursue resolution as provided in Article 12.


**Copyright © 2013 National Society of Professional Engineers, American Council of Engineering Companies, and American Society of Civil Engineers. All rights reserved.**

*3.05 Reuse of Documents*

A. Contractor and its Subcontractors and Suppliers shall not:

1. have or acquire any title to or ownership rights in any of the Drawings, Specifications, or other documents (or copies of any thereof) prepared by or bearing the seal of Engineer or its consultants, including electronic media editions, or reuse any such Drawings, Specifications, other documents, or copies thereof on extensions of the Project or any other project without written consent of Owner and Engineer and specific written verification or adaptation by Engineer; or

2. have or acquire any title or ownership rights in any other Contract Documents, reuse any such Contract Documents for any purpose without Owner's express written consent, or violate any copyrights pertaining to such Contract Documents.

B. The prohibitions of this Paragraph 3.05 will survive final payment, or termination of the Contract. Nothing herein shall preclude Contractor from retaining copies of the Contract Documents for record purposes.

**ARTICLE 4 – COMMENCEMENT AND PROGRESS OF THE WORK**

*4.01 Commencement of Contract Times; Notice to Proceed*

A. The Contract Times will commence to run on the thirtieth day after the Effective Date of the Contract or, if a Notice to Proceed is given, on the day indicated in the Notice to Proceed. A Notice to Proceed may be given at any time within 30 days after the Effective Date of the Contract. In no event will the Contract Times commence to run later than the sixtieth day after the day of Bid opening or the thirtieth day after the Effective Date of the Contract, whichever date is earlier.

*4.02 Starting the Work*

A. Contractor shall start to perform the Work on the date when the Contract Times commence to run. No Work shall be done at the Site prior to such date.

*4.03 Reference Points*

A. Owner shall provide engineering surveys to establish reference points for construction which in Engineer's judgment are necessary to enable Contractor to proceed with the Work. Contractor shall be responsible for laying out the Work, shall protect and preserve the established reference points and property monuments, and shall make no changes or relocations without the prior written approval of Owner. Contractor shall report to Engineer whenever any reference point or property monument is lost or destroyed or requires relocation because of necessary changes in grades or locations, and shall be responsible for the accurate replacement or relocation of such reference points or property monuments by professionally qualified personnel.

*4.04 Progress Schedule*

A. Contractor shall adhere to the Progress Schedule established in accordance with Paragraph 2.05 as it may be adjusted from time to time as provided below.

1. Contractor shall submit to Engineer for acceptance (to the extent indicated in Paragraph 2.05) proposed adjustments in the Progress Schedule that will not result in changing the Contract Times.


**Copyright © 2013 National Society of Professional Engineers, American Council of Engineering Companies, and American Society of Civil Engineers. All rights reserved.**

2. Proposed adjustments in the Progress Schedule that will change the Contract Times shall be submitted in accordance with the requirements of Article 11.

B. Contractor shall carry on the Work and adhere to the Progress Schedule during all disputes or disagreements with Owner. No Work shall be delayed or postponed pending resolution of any disputes or disagreements, or during any appeal process, except as permitted by Paragraph 16.04, or as Owner and Contractor may otherwise agree in writing.

*4.05 Delays in Contractor's Progress*

A. If Owner, Engineer, or anyone for whom Owner is responsible, delays, disrupts, or interferes with the performance or progress of the Work, then Contractor shall be entitled to an equitable adjustment in the Contract Times and Contract Price. Contractor's entitlement to an adjustment of the Contract Times is conditioned on such adjustment being essential to Contractor's ability to complete the Work within the Contract Times.

B. Contractor shall not be entitled to an adjustment in Contract Price or Contract Times for delay, disruption, or interference caused by or within the control of Contractor. Delay, disruption, and interference attributable to and within the control of a Subcontractor or Supplier shall be deemed to be within the control of Contractor.

C. If Contractor's performance or progress is delayed, disrupted, or interfered with by unanticipated causes not the fault of and beyond the control of Owner, Contractor, and those for which they are responsible, then Contractor shall be entitled to an equitable adjustment in Contract Times. Contractor's entitlement to an adjustment of the Contract Times is conditioned on such adjustment being essential to Contractor's ability to complete the Work within the Contract Times. Such an adjustment shall be Contractor's sole and exclusive remedy for the delays, disruption, and interference described in this paragraph. Causes of delay, disruption, or interference that may give rise to an adjustment in Contract Times under this paragraph include but are not limited to the following:

1. severe and unavoidable natural catastrophes such as fires, floods, epidemics, and earthquakes;

2. abnormal weather conditions;

3. acts or failures to act of utility owners (other than those performing other work at or adjacent to the Site by arrangement with the Owner, as contemplated in Article 8); and

4. acts of war or terrorism.

D. Delays, disruption, and interference to the performance or progress of the Work resulting from the existence of a differing subsurface or physical condition, an Underground Facility that was not shown or indicated by the Contract Documents, or not shown or indicated with reasonable accuracy, and those resulting from Hazardous Environmental Conditions, are governed by Article 5.

E. Paragraph 8.03 governs delays, disruption, and interference to the performance or progress of the Work resulting from the performance of certain other work at or adjacent to the Site.

F. Contractor shall not be entitled to an adjustment in Contract Price or Contract Times for any delay, disruption, or interference if such delay is concurrent with a delay, disruption, or interference caused by or within the control of Contractor.


**Copyright © 2013 National Society of Professional Engineers, American Council of Engineering Companies, and American Society of Civil Engineers. All rights reserved.**

G. Contractor must submit any Change Proposal seeking an adjustment in Contract Price or Contract Times under this paragraph within 30 days of the commencement of the delaying, disrupting, or interfering event.

**ARTICLE 5 – AVAILABILITY OF LANDS; SUBSURFACE AND PHYSICAL CONDITIONS; HAZARDOUS ENVIRONMENTAL CONDITIONS**

*5.01 Availability of Lands*

A. Owner shall furnish the Site. Owner shall notify Contractor of any encumbrances or restrictions not of general application but specifically related to use of the Site with which Contractor must comply in performing the Work.

B. Upon reasonable written request, Owner shall furnish Contractor with a current statement of record legal title and legal description of the lands upon which permanent improvements are to be made and Owner's interest therein as necessary for giving notice of or filing a mechanic's or construction lien against such lands in accordance with applicable Laws and Regulations.

C. Contractor shall provide for all additional lands and access thereto that may be required for temporary construction facilities or storage of materials and equipment.

*5.02 Use of Site and Other Areas*

A. *Limitation on Use of Site and Other Areas*:

1. Contractor shall confine construction equipment, temporary construction facilities, the storage of materials and equipment, and the operations of workers to the Site, adjacent areas that Contractor has arranged to use through construction easements or otherwise, and other adjacent areas permitted by Laws and Regulations, and shall not unreasonably encumber the Site and such other adjacent areas with construction equipment or other materials or equipment. Contractor shall assume full responsibility for (a) damage to the Site; (b) damage to any such other adjacent areas used for Contractor's operations; (c) damage to any other adjacent land or areas; and (d) for injuries and losses sustained by the owners or occupants of any such land or areas; provided that such damage or injuries result from the performance of the Work or from other actions or conduct of the Contractor or those for which Contractor is responsible.

2. If a damage or injury claim is made by the owner or occupant of any such land or area because of the performance of the Work, or because of other actions or conduct of the Contractor or those for which Contractor is responsible, Contractor shall (a) take immediate corrective or remedial action as required by Paragraph 7.12, or otherwise; (b) promptly attempt to settle the claim as to all parties through negotiations with such owner or occupant, or otherwise resolve the claim by arbitration or other dispute resolution proceeding, or at law; and (c) to the fullest extent permitted by Laws and Regulations, indemnify and hold harmless Owner and Engineer, and the officers, directors, members, partners, employees, agents, consultants and subcontractors of each and any of them from and against any such claim, and against all costs, losses, and damages (including but not limited to all fees and charges of engineers, architects, attorneys, and other professionals and all court or arbitration or other dispute resolution costs) arising out of or relating to any claim or action, legal or equitable, brought by any such owner or occupant against Owner, Engineer, or any other party indemnified hereunder to the extent caused directly or indirectly, in whole or in part


**Copyright © 2013 National Society of Professional Engineers, American Council of Engineering Companies, and American Society of Civil Engineers. All rights reserved.**

by, or based upon, Contractor's performance of the Work, or because of other actions or conduct of the Contractor or those for which Contractor is responsible.

B. *Removal of Debris During Performance of the Work*: During the progress of the Work the Contractor shall keep the Site and other adjacent areas free from accumulations of waste materials, rubbish, and other debris. Removal and disposal of such waste materials, rubbish, and other debris shall conform to applicable Laws and Regulations.

C. *Cleaning*: Prior to Substantial Completion of the Work Contractor shall clean the Site and the Work and make it ready for utilization by Owner. At the completion of the Work Contractor shall remove from the Site and adjacent areas all tools, appliances, construction equipment and machinery, and surplus materials and shall restore to original condition all property not designated for alteration by the Contract Documents.

D. *Loading of Structures*: Contractor shall not load nor permit any part of any structure to be loaded in any manner that will endanger the structure, nor shall Contractor subject any part of the Work or adjacent structures or land to stresses or pressures that will endanger them.

*5.03 Subsurface and Physical Conditions*

A. *Reports and Drawings*: The Supplementary Conditions identify:

1. those reports known to Owner of explorations and tests of subsurface conditions at or adjacent to the Site;

2. those drawings known to Owner of physical conditions relating to existing surface or subsurface structures at the Site (except Underground Facilities); and

3. Technical Data contained in such reports and drawings.

B. *Reliance by Contractor on Technical Data Authorized*: Contractor may rely upon the accuracy of the Technical Data expressly identified in the Supplementary Conditions with respect to such reports and drawings, but such reports and drawings are not Contract Documents. If no such express identification has been made, then Contractor may rely upon the accuracy of the Technical Data (as defined in Article 1) contained in any geotechnical or environmental report prepared for the Project and made available to Contractor. Except for such reliance on Technical Data, Contractor may not rely upon or make any claim against Owner or Engineer, or any of their officers, directors, members, partners, employees, agents, consultants, or subcontractors, with respect to:

1. the completeness of such reports and drawings for Contractor's purposes, including, but not limited to, any aspects of the means, methods, techniques, sequences, and procedures of construction to be employed by Contractor, and safety precautions and programs incident thereto; or

2. other data, interpretations, opinions, and information contained in such reports or shown or indicated in such drawings; or

3. any Contractor interpretation of or conclusion drawn from any Technical Data or any such other data, interpretations, opinions, or information.


**Copyright © 2013 National Society of Professional Engineers, American Council of Engineering Companies, and American Society of Civil Engineers. All rights reserved.**

*5.04 Differing Subsurface or Physical Conditions*

A. *Notice by Contractor*: If Contractor believes that any subsurface or physical condition that is uncovered or revealed at the Site either:

1. is of such a nature as to establish that any Technical Data on which Contractor is entitled to rely as provided in Paragraph 5.03 is materially inaccurate; or

2. is of such a nature as to require a change in the Drawings or Specifications; or

3. differs materially from that shown or indicated in the Contract Documents; or

4. is of an unusual nature, and differs materially from conditions ordinarily encountered and generally recognized as inherent in work of the character provided for in the Contract Documents;

then Contractor shall, promptly after becoming aware thereof and before further disturbing the subsurface or physical conditions or performing any Work in connection therewith (except in an emergency as required by Paragraph 7.15), notify Owner and Engineer in writing about such condition. Contractor shall not further disturb such condition or perform any Work in connection therewith (except with respect to an emergency) until receipt of a written statement permitting Contractor to do so.

B. *Engineer's Review*: After receipt of written notice as required by the preceding paragraph, Engineer will promptly review the subsurface or physical condition in question; determine the necessity of Owner's obtaining additional exploration or tests with respect to the condition; conclude whether the condition falls within any one or more of the differing site condition categories in Paragraph 5.04.A above; obtain any pertinent cost or schedule information from Contractor; prepare recommendations to Owner regarding the Contractor's resumption of Work in connection with the subsurface or physical condition in question and the need for any change in the Drawings or Specifications; and advise Owner in writing of Engineer's findings, conclusions, and recommendations.

C. *Owner's Statement to Contractor Regarding Site Condition*: After receipt of Engineer's written findings, conclusions, and recommendations, Owner shall issue a written statement to Contractor (with a copy to Engineer) regarding the subsurface or physical condition in question, addressing the resumption of Work in connection with such condition, indicating whether any change in the Drawings or Specifications will be made, and adopting or rejecting Engineer's written findings, conclusions, and recommendations, in whole or in part.

D. *Possible Price and Times Adjustments*:

1. Contractor shall be entitled to an equitable adjustment in Contract Price or Contract Times, or both, to the extent that the existence of a differing subsurface or physical condition, or any related delay, disruption, or interference, causes an increase or decrease in Contractor's cost of, or time required for, performance of the Work; subject, however, to the following:

a. such condition must fall within any one or more of the categories described in Paragraph 5.04.A;

b. with respect to Work that is paid for on a unit price basis, any adjustment in Contract Price will be subject to the provisions of Paragraph 13.03; and,


**Copyright © 2013 National Society of Professional Engineers, American Council of Engineering Companies, and American Society of Civil Engineers. All rights reserved.**

c. Contractor's entitlement to an adjustment of the Contract Times is conditioned on such adjustment being essential to Contractor's ability to complete the Work within the Contract Times.

2. Contractor shall not be entitled to any adjustment in the Contract Price or Contract Times with respect to a subsurface or physical condition if:

a. Contractor knew of the existence of such condition at the time Contractor made a commitment to Owner with respect to Contract Price and Contract Times by the submission of a Bid or becoming bound under a negotiated contract, or otherwise; or

b. the existence of such condition reasonably could have been discovered or revealed as a result of any examination, investigation, exploration, test, or study of the Site and contiguous areas expressly required by the Bidding Requirements or Contract Documents to be conducted by or for Contractor prior to Contractor's making such commitment; or

c. Contractor failed to give the written notice as required by Paragraph 5.04.A.

3. If Owner and Contractor agree regarding Contractor's entitlement to and the amount or extent of any adjustment in the Contract Price or Contract Times, or both, then any such adjustment shall be set forth in a Change Order.

4. Contractor may submit a Change Proposal regarding its entitlement to or the amount or extent of any adjustment in the Contract Price or Contract Times, or both, no later than 30 days after Owner's issuance of the Owner's written statement to Contractor regarding the subsurface or physical condition in question.

*5.05 Underground Facilities*

A. *Contractor's Responsibilities*: The information and data shown or indicated in the Contract Documents with respect to existing Underground Facilities at or adjacent to the Site is based on information and data furnished to Owner or Engineer by the owners of such Underground Facilities, including Owner, or by others. Unless it is otherwise expressly provided in the Supplementary Conditions:

1. Owner and Engineer do not warrant or guarantee the accuracy or completeness of any such information or data provided by others; and

2. the cost of all of the following will be included in the Contract Price, and Contractor shall have full responsibility for:

a. reviewing and checking all information and data regarding existing Underground Facilities at the Site;

b. locating all Underground Facilities shown or indicated in the Contract Documents as being at the Site;

c. coordination of the Work with the owners (including Owner) of such Underground Facilities, during construction; and

d. the safety and protection of all existing Underground Facilities at the Site, and repairing any damage thereto resulting from the Work.

B. *Notice by Contractor*: If Contractor believes that an Underground Facility that is uncovered or revealed at the Site was not shown or indicated in the Contract Documents, or was not shown or indicated with reasonable accuracy, then Contractor shall, promptly after


**Copyright © 2013 National Society of Professional Engineers, American Council of Engineering Companies, and American Society of Civil Engineers. All rights reserved.**

becoming aware thereof and before further disturbing conditions affected thereby or performing any Work in connection therewith (except in an emergency as required by Paragraph 7.15), identify the owner of such Underground Facility and give written notice to that owner and to Owner and Engineer.

C. *Engineer's Review*: Engineer will promptly review the Underground Facility and conclude whether such Underground Facility was not shown or indicated in the Contract Documents, or was not shown or indicated with reasonable accuracy; obtain any pertinent cost or schedule information from Contractor; prepare recommendations to Owner regarding the Contractor's resumption of Work in connection with the Underground Facility in question; determine the extent, if any, to which a change is required in the Drawings or Specifications to reflect and document the consequences of the existence or location of the Underground Facility; and advise Owner in writing of Engineer's findings, conclusions, and recommendations. During such time, Contractor shall be responsible for the safety and protection of such Underground Facility.

D. *Owner's Statement to Contractor Regarding Underground Facility*: After receipt of Engineer's written findings, conclusions, and recommendations, Owner shall issue a written statement to Contractor (with a copy to Engineer) regarding the Underground Facility in question, addressing the resumption of Work in connection with such Underground Facility, indicating whether any change in the Drawings or Specifications will be made, and adopting or rejecting Engineer's written findings, conclusions, and recommendations in whole or in part.

E. *Possible Price and Times Adjustments*:

1. Contractor shall be entitled to an equitable adjustment in the Contract Price or Contract Times, or both, to the extent that any existing Underground Facility at the Site that was not shown or indicated in the Contract Documents, or was not shown or indicated with reasonable accuracy, or any related delay, disruption, or interference, causes an increase or decrease in Contractor's cost of, or time required for, performance of the Work; subject, however, to the following:

    a. Contractor did not know of and could not reasonably have been expected to be aware of or to have anticipated the existence or actual location of the Underground Facility in question;

    b. With respect to Work that is paid for on a unit price basis, any adjustment in Contract Price will be subject to the provisions of Paragraph 13.03;

    c. Contractor's entitlement to an adjustment of the Contract Times is conditioned on such adjustment being essential to Contractor's ability to complete the Work within the Contract Times; and

    d. Contractor gave the notice required in Paragraph 5.05.B.

2. If Owner and Contractor agree regarding Contractor's entitlement to and the amount or extent of any adjustment in the Contract Price or Contract Times, or both, then any such adjustment shall be set forth in a Change Order.

3. Contractor may submit a Change Proposal regarding its entitlement to or the amount or extent of any adjustment in the Contract Price or Contract Times, or both, no later than 30 days after Owner's issuance of the Owner's written statement to Contractor regarding the Underground Facility in question.


**Copyright © 2013 National Society of Professional Engineers, American Council of Engineering Companies, and American Society of Civil Engineers. All rights reserved.**

*5.06 Hazardous Environmental Conditions at Site*

A. *Reports and Drawings*: The Supplementary Conditions identify:

1. those reports and drawings known to Owner relating to Hazardous Environmental Conditions that have been identified at or adjacent to the Site; and

2. Technical Data contained in such reports and drawings.

B. *Reliance by Contractor on Technical Data Authorized*: Contractor may rely upon the accuracy of the Technical Data expressly identified in the Supplementary Conditions with respect to such reports and drawings, but such reports and drawings are not Contract Documents. If no such express identification has been made, then Contractor may rely on the accuracy of the Technical Data (as defined in Article 1) contained in any geotechnical or environmental report prepared for the Project and made available to Contractor. Except for such reliance on Technical Data, Contractor may not rely upon or make any claim against Owner or Engineer, or any of their officers, directors, members, partners, employees, agents, consultants, or subcontractors with respect to:

1. the completeness of such reports and drawings for Contractor's purposes, including, but not limited to, any aspects of the means, methods, techniques, sequences and procedures of construction to be employed by Contractor and safety precautions and programs incident thereto; or

2. other data, interpretations, opinions and information contained in such reports or shown or indicated in such drawings; or

3. any Contractor interpretation of or conclusion drawn from any Technical Data or any such other data, interpretations, opinions or information.

C. Contractor shall not be responsible for removing or remediating any Hazardous Environmental Condition encountered, uncovered, or revealed at the Site unless such removal or remediation is expressly identified in the Contract Documents to be within the scope of the Work.

D. Contractor shall be responsible for controlling, containing, and duly removing all Constituents of Concern brought to the Site by Contractor, Subcontractors, Suppliers, or anyone else for whom Contractor is responsible, and for any associated costs; and for the costs of removing and remediating any Hazardous Environmental Condition created by the presence of any such Constituents of Concern.

E. If Contractor encounters, uncovers, or reveals a Hazardous Environmental Condition whose removal or remediation is not expressly identified in the Contract Documents as being within the scope of the Work, or if Contractor or anyone for whom Contractor is responsible creates a Hazardous Environmental Condition, then Contractor shall immediately: (1) secure or otherwise isolate such condition; (2) stop all Work in connection with such condition and in any area affected thereby (except in an emergency as required by Paragraph 7.15); and (3) notify Owner and Engineer (and promptly thereafter confirm such notice in writing). Owner shall promptly consult with Engineer concerning the necessity for Owner to retain a qualified expert to evaluate such condition or take corrective action, if any. Promptly after consulting with Engineer, Owner shall take such actions as are necessary to permit Owner to timely obtain required permits and provide Contractor the written notice required by Paragraph 5.06.F. If Contractor or anyone for whom Contractor is responsible created the Hazardous Environmental Condition in question, then Owner may remove and remediate the Hazardous Environmental Condition, and impose a set-off against payments to account for the associated costs.


**Copyright © 2013 National Society of Professional Engineers, American Council of Engineering Companies, and American Society of Civil Engineers. All rights reserved.**

F. Contractor shall not resume Work in connection with such Hazardous Environmental Condition or in any affected area until after Owner has obtained any required permits related thereto, and delivered written notice to Contractor either (1) specifying that such condition and any affected area is or has been rendered safe for the resumption of Work, or (2) specifying any special conditions under which such Work may be resumed safely.

G. If Owner and Contractor cannot agree as to entitlement to or on the amount or extent, if any, of any adjustment in Contract Price or Contract Times, or both, as a result of such Work stoppage or such special conditions under which Work is agreed to be resumed by Contractor, then within 30 days of Owner's written notice regarding the resumption of Work, Contractor may submit a Change Proposal, or Owner may impose a set-off.

H. If after receipt of such written notice Contractor does not agree to resume such Work based on a reasonable belief it is unsafe, or does not agree to resume such Work under such special conditions, then Owner may order the portion of the Work that is in the area affected by such condition to be deleted from the Work, following the contractual change procedures in Article 11. Owner may have such deleted portion of the Work performed by Owner's own forces or others in accordance with Article 8.

I. To the fullest extent permitted by Laws and Regulations, Owner shall indemnify and hold harmless Contractor, Subcontractors, and Engineer, and the officers, directors, members, partners, employees, agents, consultants, and subcontractors of each and any of them from and against all claims, costs, losses, and damages (including but not limited to all fees and charges of engineers, architects, attorneys, and other professionals and all court or arbitration or other dispute resolution costs) arising out of or relating to a Hazardous Environmental Condition, provided that such Hazardous Environmental Condition (1) was not shown or indicated in the Drawings, Specifications, or other Contract Documents, identified as Technical Data entitled to limited reliance pursuant to Paragraph 5.06.B, or identified in the Contract Documents to be included within the scope of the Work, and (2) was not created by Contractor or by anyone for whom Contractor is responsible. Nothing in this Paragraph 5.06.I shall obligate Owner to indemnify any individual or entity from and against the consequences of that individual's or entity's own negligence.

J. To the fullest extent permitted by Laws and Regulations, Contractor shall indemnify and hold harmless Owner and Engineer, and the officers, directors, members, partners, employees, agents, consultants, and subcontractors of each and any of them from and against all claims, costs, losses, and damages (including but not limited to all fees and charges of engineers, architects, attorneys, and other professionals and all court or arbitration or other dispute resolution costs) arising out of or relating to the failure to control, contain, or remove a Constituent of Concern brought to the Site by Contractor or by anyone for whom Contractor is responsible, or to a Hazardous Environmental Condition created by Contractor or by anyone for whom Contractor is responsible. Nothing in this Paragraph 5.06.J shall obligate Contractor to indemnify any individual or entity from and against the consequences of that individual's or entity's own negligence.

K. The provisions of Paragraphs 5.03, 5.04, and 5.05 do not apply to the presence of Constituents of Concern or to a Hazardous Environmental Condition uncovered or revealed at the Site.


**Copyright © 2013 National Society of Professional Engineers, American Council of Engineering Companies, and American Society of Civil Engineers. All rights reserved.**

## ARTICLE 6 – BONDS AND INSURANCE

*6.01 Performance, Payment, and Other Bonds*

A. Contractor shall furnish a performance bond and a payment bond, each in an amount at least equal to the Contract Price, as security for the faithful performance and payment of all of Contractor's obligations under the Contract. These bonds shall remain in effect until one year after the date when final payment becomes due or until completion of the correction period specified in Paragraph 15.08, whichever is later, except as provided otherwise by Laws or Regulations, the Supplementary Conditions, or other specific provisions of the Contract. Contractor shall also furnish such other bonds as are required by the Supplementary Conditions or other specific provisions of the Contract.

B. All bonds shall be in the form prescribed by the Contract except as provided otherwise by Laws or Regulations, and shall be executed by such sureties as are named in "Companies Holding Certificates of Authority as Acceptable Sureties on Federal Bonds and as Acceptable Reinsuring Companies" as published in Circular 570 (as amended and supplemented) by the Financial Management Service, Surety Bond Branch, U.S. Department of the Treasury. A bond signed by an agent or attorney-in-fact must be accompanied by a certified copy of that individual's authority to bind the surety. The evidence of authority shall show that it is effective on the date the agent or attorney-in-fact signed the accompanying bond.

C. Contractor shall obtain the required bonds from surety companies that are duly licensed or authorized in the jurisdiction in which the Project is located to issue bonds in the required amounts.

D. If the surety on a bond furnished by Contractor is declared bankrupt or becomes insolvent, or its right to do business is terminated in any state or jurisdiction where any part of the Project is located, or the surety ceases to meet the requirements above, then Contractor shall promptly notify Owner and Engineer and shall, within 20 days after the event giving rise to such notification, provide another bond and surety, both of which shall comply with the bond and surety requirements above.

E. If Contractor has failed to obtain a required bond, Owner may exclude the Contractor from the Site and exercise Owner's termination rights under Article 16.

F. Upon request, Owner shall provide a copy of the payment bond to any Subcontractor, Supplier, or other person or entity claiming to have furnished labor or materials used in the performance of the Work.

*6.02 Insurance—General Provisions*

A. Owner and Contractor shall obtain and maintain insurance as required in this Article and in the Supplementary Conditions.

B. All insurance required by the Contract to be purchased and maintained by Owner or Contractor shall be obtained from insurance companies that are duly licensed or authorized, in the state or jurisdiction in which the Project is located, to issue insurance policies for the required limits and coverages. Unless a different standard is indicated in the Supplementary Conditions, all companies that provide insurance policies required under this Contract shall have an A.M. Best rating of A-VII or better.

C. Contractor shall deliver to Owner, with copies to each named insured and additional insured (as identified in this Article, in the Supplementary Conditions, or elsewhere in the Contract), certificates of insurance establishing that Contractor has obtained and is


Copyright © 2013 National Society of Professional Engineers, American Council of Engineering Companies, and American Society of Civil Engineers. All rights reserved.

maintaining the policies, coverages, and endorsements required by the Contract. Upon request by Owner or any other insured, Contractor shall also furnish other evidence of such required insurance, including but not limited to copies of policies and endorsements, and documentation of applicable self-insured retentions and deductibles. Contractor may block out (redact) any confidential premium or pricing information contained in any policy or endorsement furnished under this provision.

D. Owner shall deliver to Contractor, with copies to each named insured and additional insured (as identified in this Article, the Supplementary Conditions, or elsewhere in the Contract), certificates of insurance establishing that Owner has obtained and is maintaining the policies, coverages, and endorsements required of Owner by the Contract (if any). Upon request by Contractor or any other insured, Owner shall also provide other evidence of such required insurance (if any), including but not limited to copies of policies and endorsements, and documentation of applicable self-insured retentions and deductibles. Owner may block out (redact) any confidential premium or pricing information contained in any policy or endorsement furnished under this provision.

E. Failure of Owner or Contractor to demand such certificates or other evidence of the other party's full compliance with these insurance requirements, or failure of Owner or Contractor to identify a deficiency in compliance from the evidence provided, shall not be construed as a waiver of the other party's obligation to obtain and maintain such insurance.

F. If either party does not purchase or maintain all of the insurance required of such party by the Contract, such party shall notify the other party in writing of such failure to purchase prior to the start of the Work, or of such failure to maintain prior to any change in the required coverage.

G. If Contractor has failed to obtain and maintain required insurance, Owner may exclude the Contractor from the Site, impose an appropriate set-off against payment, and exercise Owner's termination rights under Article 16.

H. Without prejudice to any other right or remedy, if a party has failed to obtain required insurance, the other party may elect to obtain equivalent insurance to protect such other party's interests at the expense of the party who was required to provide such coverage, and the Contract Price shall be adjusted accordingly.

I. Owner does not represent that insurance coverage and limits established in this Contract necessarily will be adequate to protect Contractor or Contractor's interests.

J. The insurance and insurance limits required herein shall not be deemed as a limitation on Contractor's liability under the indemnities granted to Owner and other individuals and entities in the Contract.

*6.03 Contractor's Insurance*

A. *Workers' Compensation*: Contractor shall purchase and maintain workers' compensation and employer's liability insurance for:

1. claims under workers' compensation, disability benefits, and other similar employee benefit acts.

2. United States Longshoreman and Harbor Workers' Compensation Act and Jones Act coverage (if applicable).

3. claims for damages because of bodily injury, occupational sickness or disease, or death of Contractor's employees (by stop-gap endorsement in monopolist worker's compensation states).


**Copyright © 2013 National Society of Professional Engineers, American Council of Engineering Companies, and American Society of Civil Engineers. All rights reserved.**

4. Foreign voluntary worker compensation (if applicable).

B. *Commercial General Liability—Claims Covered*: Contractor shall purchase and maintain commercial general liability insurance, covering all operations by or on behalf of Contractor, on an occurrence basis, against:

1. claims for damages because of bodily injury, sickness or disease, or death of any person other than Contractor's employees.

2. claims for damages insured by reasonably available personal injury liability coverage.

3. claims for damages, other than to the Work itself, because of injury to or destruction of tangible property wherever located, including loss of use resulting therefrom.

C. *Commercial General Liability—Form and Content*: Contractor's commercial liability policy shall be written on a 1996 (or later) ISO commercial general liability form (occurrence form) and include the following coverages and endorsements:

1. Products and completed operations coverage:

a. Such insurance shall be maintained for three years after final payment.

b. Contractor shall furnish Owner and each other additional insured (as identified in the Supplementary Conditions or elsewhere in the Contract) evidence of continuation of such insurance at final payment and three years thereafter.

2. Blanket contractual liability coverage, to the extent permitted by law, including but not limited to coverage of Contractor's contractual indemnity obligations in Paragraph 7.18.

3. Broad form property damage coverage.

4. Severability of interest.

5. Underground, explosion, and collapse coverage.

6. Personal injury coverage.

7. Additional insured endorsements that include both ongoing operations and products and completed operations coverage through ISO Endorsements CG 20 10 10 01 and CG 20 37 10 01 (together); or CG 20 10 07 04 and CG 20 37 07 04 (together); or their equivalent.

8. For design professional additional insureds, ISO Endorsement CG 20 32 07 04, "Additional Insured—Engineers, Architects or Surveyors Not Engaged by the Named Insured" or its equivalent.

D. *Automobile liability*: Contractor shall purchase and maintain automobile liability insurance against claims for damages because of bodily injury or death of any person or property damage arising out of the ownership, maintenance, or use of any motor vehicle. The automobile liability policy shall be written on an occurrence basis.

E. *Umbrella or excess liability*: Contractor shall purchase and maintain umbrella or excess liability insurance written over the underlying employer's liability, commercial general liability, and automobile liability insurance described in the paragraphs above. Subject to industry-standard exclusions, the coverage afforded shall follow form as to each and every one of the underlying policies.

F. *Contractor's pollution liability insurance*: Contractor shall purchase and maintain a policy covering third-party injury and property damage claims, including clean-up costs, as a result


**Copyright © 2013 National Society of Professional Engineers, American Council of Engineering Companies, and American Society of Civil Engineers. All rights reserved.**

of pollution conditions arising from Contractor's operations and completed operations. This insurance shall be maintained for no less than three years after final completion.

G. *Additional insureds*: The Contractor's commercial general liability, automobile liability, umbrella or excess, and pollution liability policies shall include and list as additional insureds Owner and Engineer, and any individuals or entities identified in the Supplementary Conditions; include coverage for the respective officers, directors, members, partners, employees, agents, consultants, and subcontractors of each and any of all such additional insureds; and the insurance afforded to these additional insureds shall provide primary coverage for all claims covered thereby (including as applicable those arising from both ongoing and completed operations) on a non-contributory basis. Contractor shall obtain all necessary endorsements to support these requirements.

H. *Contractor's professional liability insurance*: If Contractor will provide or furnish professional services under this Contract, through a delegation of professional design services or otherwise, then Contractor shall be responsible for purchasing and maintaining applicable professional liability insurance. This insurance shall provide protection against claims arising out of performance of professional design or related services, and caused by a negligent error, omission, or act for which the insured party is legally liable. It shall be maintained throughout the duration of the Contract and for a minimum of two years after Substantial Completion. If such professional design services are performed by a Subcontractor, and not by Contractor itself, then the requirements of this paragraph may be satisfied through the purchasing and maintenance of such insurance by such Subcontractor.

I. *General provisions*: The policies of insurance required by this Paragraph 6.03 shall:

1. include at least the specific coverages provided in this Article.
2. be written for not less than the limits of liability provided in this Article and in the Supplementary Conditions, or required by Laws or Regulations, whichever is greater.
3. contain a provision or endorsement that the coverage afforded will not be canceled, materially changed, or renewal refused until at least 10 days prior written notice has been given to Contractor. Within three days of receipt of any such written notice, Contractor shall provide a copy of the notice to Owner, Engineer, and each other insured under the policy.
4. remain in effect at least until final payment (and longer if expressly required in this Article) and at all times thereafter when Contractor may be correcting, removing, or replacing defective Work as a warranty or correction obligation, or otherwise, or returning to the Site to conduct other tasks arising from the Contract Documents.
5. be appropriate for the Work being performed and provide protection from claims that may arise out of or result from Contractor's performance of the Work and Contractor's other obligations under the Contract Documents, whether it is to be performed by Contractor, any Subcontractor or Supplier, or by anyone directly or indirectly employed by any of them to perform any of the Work, or by anyone for whose acts any of them may be liable.

J. The coverage requirements for specific policies of insurance must be met by such policies, and not by reference to excess or umbrella insurance provided in other policies.


**Copyright © 2013 National Society of Professional Engineers, American Council of Engineering Companies, and American Society of Civil Engineers. All rights reserved.**

*6.04 Owner's Liability Insurance*

A. In addition to the insurance required to be provided by Contractor under Paragraph 6.03, Owner, at Owner's option, may purchase and maintain at Owner's expense Owner's own liability insurance as will protect Owner against claims which may arise from operations under the Contract Documents.

B. Owner's liability policies, if any, operate separately and independently from policies required to be provided by Contractor, and Contractor cannot rely upon Owner's liability policies for any of Contractor's obligations to the Owner, Engineer, or third parties.

*6.05 Property Insurance*

A. *Builder's Risk*: Unless otherwise provided in the Supplementary Conditions, Contractor shall purchase and maintain builder's risk insurance upon the Work on a completed value basis, in the amount of the full insurable replacement cost thereof (subject to such deductible amounts as may be provided in the Supplementary Conditions or required by Laws and Regulations). This insurance shall:

1. include the Owner and Contractor as named insureds, and all Subcontractors, and any individuals or entities required by the Supplementary Conditions to be insured under such builder's risk policy, as insureds or named insureds. For purposes of the remainder of this Paragraph 6.05, Paragraphs 6.06 and 6.07, and any corresponding Supplementary Conditions, the parties required to be insured shall collectively be referred to as "insureds."

2. be written on a builder's risk "all risk" policy form that shall at least include insurance for physical loss or damage to the Work, temporary buildings, falsework, and materials and equipment in transit, and shall insure against at least the following perils or causes of loss: fire; lightning; windstorm; riot; civil commotion; terrorism; vehicle impact; aircraft; smoke; theft; vandalism and malicious mischief; mechanical breakdown, boiler explosion, and artificially generated electric current; earthquake; volcanic activity, and other earth movement; flood; collapse; explosion; debris removal; demolition occasioned by enforcement of Laws and Regulations; water damage (other than that caused by flood); and such other perils or causes of loss as may be specifically required by the Supplementary Conditions. If insurance against mechanical breakdown, boiler explosion, and artificially generated electric current; earthquake; volcanic activity, and other earth movement; or flood, are not commercially available under builder's risk policies, by endorsement or otherwise, such insurance may be provided through other insurance policies acceptable to Owner and Contractor.

3. cover, as insured property, at least the following: (a) the Work and all materials, supplies, machinery, apparatus, equipment, fixtures, and other property of a similar nature that are to be incorporated into or used in the preparation, fabrication, construction, erection, or completion of the Work, including Owner-furnished or assigned property; (b) spare parts inventory required within the scope of the Contract; and (c) temporary works which are not intended to form part of the permanent constructed Work but which are intended to provide working access to the Site, or to the Work under construction, or which are intended to provide temporary support for the Work under construction, including scaffolding, form work, fences, shoring, falsework, and temporary structures.

4. cover expenses incurred in the repair or replacement of any insured property (including but not limited to fees and charges of engineers and architects).


**Copyright © 2013 National Society of Professional Engineers, American Council of Engineering Companies, and American Society of Civil Engineers. All rights reserved.**

5. extend to cover damage or loss to insured property while in temporary storage at the Site or in a storage location outside the Site (but not including property stored at the premises of a manufacturer or Supplier).

6. extend to cover damage or loss to insured property while in transit.

7. allow for partial occupation or use of the Work by Owner, such that those portions of the Work that are not yet occupied or used by Owner shall remain covered by the builder's risk insurance.

8. allow for the waiver of the insurer's subrogation rights, as set forth below.

9. provide primary coverage for all losses and damages caused by the perils or causes of loss covered.

10. not include a co-insurance clause.

11. include an exception for ensuing losses from physical damage or loss with respect to any defective workmanship, design, or materials exclusions.

12. include performance/hot testing and start-up.

13. be maintained in effect, subject to the provisions herein regarding Substantial Completion and partial occupancy or use of the Work by Owner, until the Work is complete.

B. *Notice of Cancellation or Change*: All the policies of insurance (and the certificates or other evidence thereof) required to be purchased and maintained in accordance with this Paragraph 6.05 will contain a provision or endorsement that the coverage afforded will not be canceled or materially changed or renewal refused until at least 10 days prior written notice has been given to the purchasing policyholder. Within three days of receipt of any such written notice, the purchasing policyholder shall provide a copy of the notice to each other insured.

C. *Deductibles*: The purchaser of any required builder's risk or property insurance shall pay for costs not covered because of the application of a policy deductible.

D. *Partial Occupancy or Use by Owner*: If Owner will occupy or use a portion or portions of the Work prior to Substantial Completion of all the Work as provided in Paragraph 15.04, then Owner (directly, if it is the purchaser of the builder's risk policy, or through Contractor) will provide notice of such occupancy or use to the builder's risk insurer. The builder's risk insurance shall not be canceled or permitted to lapse on account of any such partial use or occupancy; rather, those portions of the Work that are occupied or used by Owner may come off the builder's risk policy, while those portions of the Work not yet occupied or used by Owner shall remain covered by the builder's risk insurance.

E. *Additional Insurance*: If Contractor elects to obtain other special insurance to be included in or supplement the builder's risk or property insurance policies provided under this Paragraph 6.05, it may do so at Contractor's expense.

F. *Insurance of Other Property*: If the express insurance provisions of the Contract do not require or address the insurance of a property item or interest, such as tools, construction equipment, or other personal property owned by Contractor, a Subcontractor, or an employee of Contractor or a Subcontractor, then the entity or individual owning such property item will be responsible for deciding whether to insure it, and if so in what amount.


**Copyright © 2013 National Society of Professional Engineers, American Council of Engineering Companies, and American Society of Civil Engineers. All rights reserved.**

*6.06 Waiver of Rights*

A. All policies purchased in accordance with Paragraph 6.05, expressly including the builder's risk policy, shall contain provisions to the effect that in the event of payment of any loss or damage the insurers will have no rights of recovery against any insureds thereunder, or against Engineer or its consultants, or their officers, directors, members, partners, employees, agents, consultants, or subcontractors. Owner and Contractor waive all rights against each other and the respective officers, directors, members, partners, employees, agents, consultants, and subcontractors of each and any of them, for all losses and damages caused by, arising out of, or resulting from any of the perils or causes of loss covered by such policies and any other property insurance applicable to the Work; and, in addition, waive all such rights against Engineer, its consultants, all Subcontractors, all individuals or entities identified in the Supplementary Conditions as insureds, and the officers, directors, members, partners, employees, agents, consultants, and subcontractors of each and any of them, under such policies for losses and damages so caused. None of the above waivers shall extend to the rights that any party making such waiver may have to the proceeds of insurance held by Owner or Contractor as trustee or fiduciary, or otherwise payable under any policy so issued.

B. Owner waives all rights against Contractor, Subcontractors, and Engineer, and the officers, directors, members, partners, employees, agents, consultants and subcontractors of each and any of them, for:

1. loss due to business interruption, loss of use, or other consequential loss extending beyond direct physical loss or damage to Owner's property or the Work caused by, arising out of, or resulting from fire or other perils whether or not insured by Owner; and

2. loss or damage to the completed Project or part thereof caused by, arising out of, or resulting from fire or other insured peril or cause of loss covered by any property insurance maintained on the completed Project or part thereof by Owner during partial occupancy or use pursuant to Paragraph 15.04, after Substantial Completion pursuant to Paragraph 15.03, or after final payment pursuant to Paragraph 15.06.

C. Any insurance policy maintained by Owner covering any loss, damage or consequential loss referred to in Paragraph 6.06.B shall contain provisions to the effect that in the event of payment of any such loss, damage, or consequential loss, the insurers will have no rights of recovery against Contractor, Subcontractors, or Engineer, or the officers, directors, members, partners, employees, agents, consultants, or subcontractors of each and any of them.

D. Contractor shall be responsible for assuring that the agreement under which a Subcontractor performs a portion of the Work contains provisions whereby the Subcontractor waives all rights against Owner, Contractor, all individuals or entities identified in the Supplementary Conditions as insureds, the Engineer and its consultants, and the officers, directors, members, partners, employees, agents, consultants, and subcontractors of each and any of them, for all losses and damages caused by, arising out of, relating to, or resulting from any of the perils or causes of loss covered by builder's risk insurance and any other property insurance applicable to the Work.

*6.07 Receipt and Application of Property Insurance Proceeds*

A. Any insured loss under the builder's risk and other policies of insurance required by Paragraph 6.05 will be adjusted and settled with the named insured that purchased the


**Copyright © 2013 National Society of Professional Engineers, American Council of Engineering Companies, and American Society of Civil Engineers. All rights reserved.**

policy. Such named insured shall act as fiduciary for the other insureds, and give notice to such other insureds that adjustment and settlement of a claim is in progress. Any other insured may state its position regarding a claim for insured loss in writing within 15 days after notice of such claim.

B. Proceeds for such insured losses may be made payable by the insurer either jointly to multiple insureds, or to the named insured that purchased the policy in its own right and as fiduciary for other insureds, subject to the requirements of any applicable mortgage clause. A named insured receiving insurance proceeds under the builder's risk and other policies of insurance required by Paragraph 6.05 shall distribute such proceeds in accordance with such agreement as the parties in interest may reach, or as otherwise required under the dispute resolution provisions of this Contract or applicable Laws and Regulations.

C. If no other special agreement is reached, the damaged Work shall be repaired or replaced, the money so received applied on account thereof, and the Work and the cost thereof covered by Change Order, if needed.

**ARTICLE 7 – CONTRACTOR'S RESPONSIBILITIES**

*7.01 Supervision and Superintendence*

A. Contractor shall supervise, inspect, and direct the Work competently and efficiently, devoting such attention thereto and applying such skills and expertise as may be necessary to perform the Work in accordance with the Contract Documents. Contractor shall be solely responsible for the means, methods, techniques, sequences, and procedures of construction.

B. At all times during the progress of the Work, Contractor shall assign a competent resident superintendent who shall not be replaced without written notice to Owner and Engineer except under extraordinary circumstances.

*7.02 Labor; Working Hours*

A. Contractor shall provide competent, suitably qualified personnel to survey and lay out the Work and perform construction as required by the Contract Documents. Contractor shall at all times maintain good discipline and order at the Site.

B. Except as otherwise required for the safety or protection of persons or the Work or property at the Site or adjacent thereto, and except as otherwise stated in the Contract Documents, all Work at the Site shall be performed during regular working hours, Monday through Friday. Contractor will not perform Work on a Saturday, Sunday, or any legal holiday. Contractor may perform Work outside regular working hours or on Saturdays, Sundays, or legal holidays only with Owner's written consent, which will not be unreasonably withheld.

*7.03 Services, Materials, and Equipment*

A. Unless otherwise specified in the Contract Documents, Contractor shall provide and assume full responsibility for all services, materials, equipment, labor, transportation, construction equipment and machinery, tools, appliances, fuel, power, light, heat, telephone, water, sanitary facilities, temporary facilities, and all other facilities and incidentals necessary for the performance, testing, start up, and completion of the Work, whether or not such items are specifically called for in the Contract Documents.

B. All materials and equipment incorporated into the Work shall be of good quality and new, except as otherwise provided in the Contract Documents. All special warranties and


**Copyright © 2013 National Society of Professional Engineers, American Council of Engineering Companies, and American Society of Civil Engineers. All rights reserved.**

guarantees required by the Specifications shall expressly run to the benefit of Owner. If required by Engineer, Contractor shall furnish satisfactory evidence (including reports of required tests) as to the source, kind, and quality of materials and equipment.

C. All materials and equipment shall be stored, applied, installed, connected, erected, protected, used, cleaned, and conditioned in accordance with instructions of the applicable Supplier, except as otherwise may be provided in the Contract Documents.

*7.04 "Or Equals"*

A. Whenever an item of material or equipment is specified or described in the Contract Documents by using the name of a proprietary item or the name of a particular Supplier, the Contract Price has been based upon Contractor furnishing such item as specified. The specification or description of such an item is intended to establish the type, function, appearance, and quality required. Unless the specification or description contains or is followed by words reading that no like, equivalent, or "or equal" item is permitted, Contractor may request that Engineer authorize the use of other items of material or equipment, or items from other proposed suppliers under the circumstances described below.

1. If Engineer in its sole discretion determines that an item of material or equipment proposed by Contractor is functionally equal to that named and sufficiently similar so that no change in related Work will be required, Engineer shall deem it an "or equal" item. For the purposes of this paragraph, a proposed item of material or equipment will be considered functionally equal to an item so named if:

a. in the exercise of reasonable judgment Engineer determines that:

1) it is at least equal in materials of construction, quality, durability, appearance, strength, and design characteristics;

2) it will reliably perform at least equally well the function and achieve the results imposed by the design concept of the completed Project as a functioning whole;

3) it has a proven record of performance and availability of responsive service; and

4) it is not objectionable to Owner.

b. Contractor certifies that, if approved and incorporated into the Work:

1) there will be no increase in cost to the Owner or increase in Contract Times; and

2) it will conform substantially to the detailed requirements of the item named in the Contract Documents.

B. *Contractor's Expense*: Contractor shall provide all data in support of any proposed "or equal" item at Contractor's expense.

C. *Engineer's Evaluation and Determination*: Engineer will be allowed a reasonable time to evaluate each "or-equal" request. Engineer may require Contractor to furnish additional data about the proposed "or-equal" item. Engineer will be the sole judge of acceptability. No "or-equal" item will be ordered, furnished, installed, or utilized until Engineer's review is complete and Engineer determines that the proposed item is an "or-equal", which will be evidenced by an approved Shop Drawing or other written communication. Engineer will advise Contractor in writing of any negative determination.


**Copyright © 2013 National Society of Professional Engineers, American Council of Engineering Companies, and American Society of Civil Engineers. All rights reserved.**

D. *Effect of Engineer's Determination*: Neither approval nor denial of an "or-equal" request shall result in any change in Contract Price. The Engineer's denial of an "or-equal" request shall be final and binding, and may not be reversed through an appeal under any provision of the Contract Documents.

E. *Treatment as a Substitution Request*: If Engineer determines that an item of material or equipment proposed by Contractor does not qualify as an "or-equal" item, Contractor may request that Engineer considered the proposed item as a substitute pursuant to Paragraph 7.05.

*7.05 Substitutes*

A. Unless the specification or description of an item of material or equipment required to be furnished under the Contract Documents contains or is followed by words reading that no substitution is permitted, Contractor may request that Engineer authorize the use of other items of material or equipment under the circumstances described below. To the extent possible such requests shall be made before commencement of related construction at the Site.

1. Contractor shall submit sufficient information as provided below to allow Engineer to determine if the item of material or equipment proposed is functionally equivalent to that named and an acceptable substitute therefor. Engineer will not accept requests for review of proposed substitute items of material or equipment from anyone other than Contractor.

2. The requirements for review by Engineer will be as set forth in Paragraph 7.05.B, as supplemented by the Specifications, and as Engineer may decide is appropriate under the circumstances.

3. Contractor shall make written application to Engineer for review of a proposed substitute item of material or equipment that Contractor seeks to furnish or use. The application:

a. shall certify that the proposed substitute item will:

1) perform adequately the functions and achieve the results called for by the general design,

2) be similar in substance to that specified, and

3) be suited to the same use as that specified.

b. will state:

1) the extent, if any, to which the use of the proposed substitute item will necessitate a change in Contract Times,

2) whether use of the proposed substitute item in the Work will require a change in any of the Contract Documents (or in the provisions of any other direct contract with Owner for other work on the Project) to adapt the design to the proposed substitute item, and

3) whether incorporation or use of the proposed substitute item in connection with the Work is subject to payment of any license fee or royalty.

c. will identify:

1) all variations of the proposed substitute item from that specified, and


**Copyright © 2013 National Society of Professional Engineers, American Council of Engineering Companies, and American Society of Civil Engineers. All rights reserved.**

2) available engineering, sales, maintenance, repair, and replacement services.

d. shall contain an itemized estimate of all costs or credits that will result directly or indirectly from use of such substitute item, including but not limited to changes in Contract Price, shared savings, costs of redesign, and claims of other contractors affected by any resulting change.

B. *Engineer's Evaluation and Determination*: Engineer will be allowed a reasonable time to evaluate each substitute request, and to obtain comments and direction from Owner. Engineer may require Contractor to furnish additional data about the proposed substitute item. Engineer will be the sole judge of acceptability. No substitute will be ordered, furnished, installed, or utilized until Engineer's review is complete and Engineer determines that the proposed item is an acceptable substitute. Engineer's determination will be evidenced by a Field Order or a proposed Change Order accounting for the substitution itself and all related impacts, including changes in Contract Price or Contract Times. Engineer will advise Contractor in writing of any negative determination.

C. *Special Guarantee*: Owner may require Contractor to furnish at Contractor's expense a special performance guarantee or other surety with respect to any substitute.

D. *Reimbursement of Engineer's Cost*: Engineer will record Engineer's costs in evaluating a substitute proposed or submitted by Contractor. Whether or not Engineer approves a substitute so proposed or submitted by Contractor, Contractor shall reimburse Owner for the reasonable charges of Engineer for evaluating each such proposed substitute. Contractor shall also reimburse Owner for the reasonable charges of Engineer for making changes in the Contract Documents (or in the provisions of any other direct contract with Owner) resulting from the acceptance of each proposed substitute.

E. *Contractor's Expense*: Contractor shall provide all data in support of any proposed substitute at Contractor's expense.

F. *Effect of Engineer's Determination*: If Engineer approves the substitution request, Contractor shall execute the proposed Change Order and proceed with the substitution. The Engineer's denial of a substitution request shall be final and binding, and may not be reversed through an appeal under any provision of the Contract Documents. Contractor may challenge the scope of reimbursement costs imposed under Paragraph 7.05.D, by timely submittal of a Change Proposal.

*7.06 Concerning Subcontractors, Suppliers, and Others*

A. Contractor may retain Subcontractors and Suppliers for the performance of parts of the Work. Such Subcontractors and Suppliers must be acceptable to Owner.

B. Contractor shall retain specific Subcontractors, Suppliers, or other individuals or entities for the performance of designated parts of the Work if required by the Contract to do so.

C. Subsequent to the submittal of Contractor's Bid or final negotiation of the terms of the Contract, Owner may not require Contractor to retain any Subcontractor, Supplier, or other individual or entity to furnish or perform any of the Work against which Contractor has reasonable objection.

D. Prior to entry into any binding subcontract or purchase order, Contractor shall submit to Owner the identity of the proposed Subcontractor or Supplier (unless Owner has already deemed such proposed Subcontractor or Supplier acceptable, during the bidding process or otherwise). Such proposed Subcontractor or Supplier shall be deemed acceptable to Owner unless Owner raises a substantive, reasonable objection within five days.


**Copyright © 2013 National Society of Professional Engineers, American Council of Engineering Companies, and American Society of Civil Engineers. All rights reserved.**

E. Owner may require the replacement of any Subcontractor, Supplier, or other individual or entity retained by Contractor to perform any part of the Work. Owner also may require Contractor to retain specific replacements; provided, however, that Owner may not require a replacement to which Contractor has a reasonable objection. If Contractor has submitted the identity of certain Subcontractors, Suppliers, or other individuals or entities for acceptance by Owner, and Owner has accepted it (either in writing or by failing to make written objection thereto), then Owner may subsequently revoke the acceptance of any such Subcontractor, Supplier, or other individual or entity so identified solely on the basis of substantive, reasonable objection after due investigation. Contractor shall submit an acceptable replacement for the rejected Subcontractor, Supplier, or other individual or entity.

F. If Owner requires the replacement of any Subcontractor, Supplier, or other individual or entity retained by Contractor to perform any part of the Work, then Contractor shall be entitled to an adjustment in Contract Price or Contract Times, or both, with respect to the replacement; and Contractor shall initiate a Change Proposal for such adjustment within 30 days of Owner's requirement of replacement.

G. No acceptance by Owner of any such Subcontractor, Supplier, or other individual or entity, whether initially or as a replacement, shall constitute a waiver of the right of Owner to the completion of the Work in accordance with the Contract Documents.

H. On a monthly basis Contractor shall submit to Engineer a complete list of all Subcontractors and Suppliers having a direct contract with Contractor, and of all other Subcontractors and Suppliers known to Contractor at the time of submittal.

I. Contractor shall be fully responsible to Owner and Engineer for all acts and omissions of the Subcontractors, Suppliers, and other individuals or entities performing or furnishing any of the Work just as Contractor is responsible for Contractor's own acts and omissions.

J. Contractor shall be solely responsible for scheduling and coordinating the work of Subcontractors, Suppliers, and all other individuals or entities performing or furnishing any of the Work.

K. Contractor shall restrict all Subcontractors, Suppliers, and such other individuals or entities performing or furnishing any of the Work from communicating with Engineer or Owner, except through Contractor or in case of an emergency, or as otherwise expressly allowed herein.

L. The divisions and sections of the Specifications and the identifications of any Drawings shall not control Contractor in dividing the Work among Subcontractors or Suppliers or delineating the Work to be performed by any specific trade.

M. All Work performed for Contractor by a Subcontractor or Supplier shall be pursuant to an appropriate contractual agreement that specifically binds the Subcontractor or Supplier to the applicable terms and conditions of the Contract Documents for the benefit of Owner and Engineer.

N. Owner may furnish to any Subcontractor or Supplier, to the extent practicable, information about amounts paid to Contractor on account of Work performed for Contractor by the particular Subcontractor or Supplier.


**Copyright © 2013 National Society of Professional Engineers, American Council of Engineering Companies, and American Society of Civil Engineers. All rights reserved.**

O. Nothing in the Contract Documents:

1. shall create for the benefit of any such Subcontractor, Supplier, or other individual or entity any contractual relationship between Owner or Engineer and any such Subcontractor, Supplier, or other individual or entity; nor

2. shall create any obligation on the part of Owner or Engineer to pay or to see to the payment of any money due any such Subcontractor, Supplier, or other individual or entity except as may otherwise be required by Laws and Regulations.

*7.07 Patent Fees and Royalties*

A. Contractor shall pay all license fees and royalties and assume all costs incident to the use in the performance of the Work or the incorporation in the Work of any invention, design, process, product, or device which is the subject of patent rights or copyrights held by others. If a particular invention, design, process, product, or device is specified in the Contract Documents for use in the performance of the Work and if, to the actual knowledge of Owner or Engineer, its use is subject to patent rights or copyrights calling for the payment of any license fee or royalty to others, the existence of such rights shall be disclosed by Owner in the Contract Documents.

B. To the fullest extent permitted by Laws and Regulations, Owner shall indemnify and hold harmless Contractor, and its officers, directors, members, partners, employees, agents, consultants, and subcontractors from and against all claims, costs, losses, and damages (including but not limited to all fees and charges of engineers, architects, attorneys, and other professionals, and all court or arbitration or other dispute resolution costs) arising out of or relating to any infringement of patent rights or copyrights incident to the use in the performance of the Work or resulting from the incorporation in the Work of any invention, design, process, product, or device specified in the Contract Documents, but not identified as being subject to payment of any license fee or royalty to others required by patent rights or copyrights.

C. To the fullest extent permitted by Laws and Regulations, Contractor shall indemnify and hold harmless Owner and Engineer, and the officers, directors, members, partners, employees, agents, consultants and subcontractors of each and any of them from and against all claims, costs, losses, and damages (including but not limited to all fees and charges of engineers, architects, attorneys, and other professionals and all court or arbitration or other dispute resolution costs) arising out of or relating to any infringement of patent rights or copyrights incident to the use in the performance of the Work or resulting from the incorporation in the Work of any invention, design, process, product, or device not specified in the Contract Documents.

*7.08 Permits*

A. Unless otherwise provided in the Contract Documents, Contractor shall obtain and pay for all construction permits and licenses. Owner shall assist Contractor, when necessary, in obtaining such permits and licenses. Contractor shall pay all governmental charges and inspection fees necessary for the prosecution of the Work which are applicable at the time of the submission of Contractor's Bid (or when Contractor became bound under a negotiated contract). Owner shall pay all charges of utility owners for connections for providing permanent service to the Work


**Copyright © 2013 National Society of Professional Engineers, American Council of Engineering Companies, and American Society of Civil Engineers. All rights reserved.**

*7.09 Taxes*

A. Contractor shall pay all sales, consumer, use, and other similar taxes required to be paid by Contractor in accordance with the Laws and Regulations of the place of the Project which are applicable during the performance of the Work.

*7.10 Laws and Regulations*

A. Contractor shall give all notices required by and shall comply with all Laws and Regulations applicable to the performance of the Work. Except where otherwise expressly required by applicable Laws and Regulations, neither Owner nor Engineer shall be responsible for monitoring Contractor's compliance with any Laws or Regulations.

B. If Contractor performs any Work or takes any other action knowing or having reason to know that it is contrary to Laws or Regulations, Contractor shall bear all resulting costs and losses, and shall indemnify and hold harmless Owner and Engineer, and the officers, directors, members, partners, employees, agents, consultants, and subcontractors of each and any of them from and against all claims, costs, losses, and damages (including but not limited to all fees and charges of engineers, architects, attorneys, and other professionals and all court or arbitration or other dispute resolution costs) arising out of or relating to such Work or other action. It shall not be Contractor's responsibility to make certain that the Work described in the Contract Documents is in accordance with Laws and Regulations, but this shall not relieve Contractor of Contractor's obligations under Paragraph 3.03.

C. Owner or Contractor may give notice to the other party of any changes after the submission of Contractor's Bid (or after the date when Contractor became bound under a negotiated contract) in Laws or Regulations having an effect on the cost or time of performance of the Work, including but not limited to changes in Laws or Regulations having an effect on procuring permits and on sales, use, value-added, consumption, and other similar taxes. If Owner and Contractor are unable to agree on entitlement to or on the amount or extent, if any, of any adjustment in Contract Price or Contract Times resulting from such changes, then within 30 days of such notice Contractor may submit a Change Proposal, or Owner may initiate a Claim.

*7.11 Record Documents*

A. Contractor shall maintain in a safe place at the Site one printed record copy of all Drawings, Specifications, Addenda, Change Orders, Work Change Directives, Field Orders, written interpretations and clarifications, and approved Shop Drawings. Contractor shall keep such record documents in good order and annotate them to show changes made during construction. These record documents, together with all approved Samples, will be available to Engineer for reference. Upon completion of the Work, Contractor shall deliver these record documents to Engineer.

*7.12 Safety and Protection*

A. Contractor shall be solely responsible for initiating, maintaining, and supervising all safety precautions and programs in connection with the Work. Such responsibility does not relieve Subcontractors of their responsibility for the safety of persons or property in the performance of their work, nor for compliance with applicable safety Laws and Regulations. Contractor shall take all necessary precautions for the safety of, and shall provide the necessary protection to prevent damage, injury, or loss to:

1. all persons on the Site or who may be affected by the Work;


**Copyright © 2013 National Society of Professional Engineers, American Council of Engineering Companies, and American Society of Civil Engineers. All rights reserved.**

2. all the Work and materials and equipment to be incorporated therein, whether in storage on or off the Site; and

3. other property at the Site or adjacent thereto, including trees, shrubs, lawns, walks, pavements, roadways, structures, other work in progress, utilities, and Underground Facilities not designated for removal, relocation, or replacement in the course of construction.

B. Contractor shall comply with all applicable Laws and Regulations relating to the safety of persons or property, or to the protection of persons or property from damage, injury, or loss; and shall erect and maintain all necessary safeguards for such safety and protection. Contractor shall notify Owner; the owners of adjacent property, Underground Facilities, and other utilities; and other contractors and utility owners performing work at or adjacent to the Site, when prosecution of the Work may affect them, and shall cooperate with them in the protection, removal, relocation, and replacement of their property or work in progress.

C. Contractor shall comply with the applicable requirements of Owner's safety programs, if any. The Supplementary Conditions identify any Owner's safety programs that are applicable to the Work.

D. Contractor shall inform Owner and Engineer of the specific requirements of Contractor's safety program with which Owner's and Engineer's employees and representatives must comply while at the Site.

E. All damage, injury, or loss to any property referred to in Paragraph 7.12.A.2 or 7.12.A.3 caused, directly or indirectly, in whole or in part, by Contractor, any Subcontractor, Supplier, or any other individual or entity directly or indirectly employed by any of them to perform any of the Work, or anyone for whose acts any of them may be liable, shall be remedied by Contractor at its expense (except damage or loss attributable to the fault of Drawings or Specifications or to the acts or omissions of Owner or Engineer or anyone employed by any of them, or anyone for whose acts any of them may be liable, and not attributable, directly or indirectly, in whole or in part, to the fault or negligence of Contractor or any Subcontractor, Supplier, or other individual or entity directly or indirectly employed by any of them).

F. Contractor's duties and responsibilities for safety and protection shall continue until such time as all the Work is completed and Engineer has issued a notice to Owner and Contractor in accordance with Paragraph 15.06.B that the Work is acceptable (except as otherwise expressly provided in connection with Substantial Completion).

G. Contractor's duties and responsibilities for safety and protection shall resume whenever Contractor or any Subcontractor or Supplier returns to the Site to fulfill warranty or correction obligations, or to conduct other tasks arising from the Contract Documents.

*7.13 Safety Representative*

A. Contractor shall designate a qualified and experienced safety representative at the Site whose duties and responsibilities shall be the prevention of accidents and the maintaining and supervising of safety precautions and programs.

*7.14 Hazard Communication Programs*

A. Contractor shall be responsible for coordinating any exchange of material safety data sheets or other hazard communication information required to be made available to or


**Copyright © 2013 National Society of Professional Engineers, American Council of Engineering Companies, and American Society of Civil Engineers. All rights reserved.**

exchanged between or among employers at the Site in accordance with Laws or Regulations.

*7.15 Emergencies*

A. In emergencies affecting the safety or protection of persons or the Work or property at the Site or adjacent thereto, Contractor is obligated to act to prevent threatened damage, injury, or loss. Contractor shall give Engineer prompt written notice if Contractor believes that any significant changes in the Work or variations from the Contract Documents have been caused thereby or are required as a result thereof. If Engineer determines that a change in the Contract Documents is required because of the action taken by Contractor in response to such an emergency, a Work Change Directive or Change Order will be issued.

*7.16 Shop Drawings, Samples, and Other Submittals*

A. *Shop Drawing and Sample Submittal Requirements*:

1. Before submitting a Shop Drawing or Sample, Contractor shall have:

a. reviewed and coordinated the Shop Drawing or Sample with other Shop Drawings and Samples and with the requirements of the Work and the Contract Documents;

b. determined and verified all field measurements, quantities, dimensions, specified performance and design criteria, installation requirements, materials, catalog numbers, and similar information with respect thereto;

c. determined and verified the suitability of all materials and equipment offered with respect to the indicated application, fabrication, shipping, handling, storage, assembly, and installation pertaining to the performance of the Work; and

d. determined and verified all information relative to Contractor's responsibilities for means, methods, techniques, sequences, and procedures of construction, and safety precautions and programs incident thereto.

2. Each submittal shall bear a stamp or specific written certification that Contractor has satisfied Contractor's obligations under the Contract Documents with respect to Contractor's review of that submittal, and that Contractor approves the submittal.

3. With each submittal, Contractor shall give Engineer specific written notice of any variations that the Shop Drawing or Sample may have from the requirements of the Contract Documents. This notice shall be set forth in a written communication separate from the Shop Drawings or Sample submittal; and, in addition, in the case of Shop Drawings by a specific notation made on each Shop Drawing submitted to Engineer for review and approval of each such variation.

B. *Submittal Procedures for Shop Drawings and Samples*: Contractor shall submit Shop Drawings and Samples to Engineer for review and approval in accordance with the accepted Schedule of Submittals. Each submittal will be identified as Engineer may require.

1. *Shop Drawings*:

a. Contractor shall submit the number of copies required in the Specifications.

b. Data shown on the Shop Drawings will be complete with respect to quantities, dimensions, specified performance and design criteria, materials, and similar data to show Engineer the services, materials, and equipment Contractor proposes to


Copyright © 2013 National Society of Professional Engineers, American Council of Engineering Companies, and American Society of Civil Engineers. All rights reserved.

provide and to enable Engineer to review the information for the limited purposes required by Paragraph 7.16.D.

2. *Samples*:

   a. Contractor shall submit the number of Samples required in the Specifications.

   b. Contractor shall clearly identify each Sample as to material, Supplier, pertinent data such as catalog numbers, the use for which intended and other data as Engineer may require to enable Engineer to review the submittal for the limited purposes required by Paragraph 7.16.D.

3. Where a Shop Drawing or Sample is required by the Contract Documents or the Schedule of Submittals, any related Work performed prior to Engineer's review and approval of the pertinent submittal will be at the sole expense and responsibility of Contractor.

C. *Other Submittals*: Contractor shall submit other submittals to Engineer in accordance with the accepted Schedule of Submittals, and pursuant to the applicable terms of the Specifications.

D. *Engineer's Review*:

1. Engineer will provide timely review of Shop Drawings and Samples in accordance with the Schedule of Submittals acceptable to Engineer. Engineer's review and approval will be only to determine if the items covered by the submittals will, after installation or incorporation in the Work, conform to the information given in the Contract Documents and be compatible with the design concept of the completed Project as a functioning whole as indicated by the Contract Documents.

2. Engineer's review and approval will not extend to means, methods, techniques, sequences, or procedures of construction or to safety precautions or programs incident thereto.

3. Engineer's review and approval of a separate item as such will not indicate approval of the assembly in which the item functions.

4. Engineer's review and approval of a Shop Drawing or Sample shall not relieve Contractor from responsibility for any variation from the requirements of the Contract Documents unless Contractor has complied with the requirements of Paragraph 7.16.A.3 and Engineer has given written approval of each such variation by specific written notation thereof incorporated in or accompanying the Shop Drawing or Sample. Engineer will document any such approved variation from the requirements of the Contract Documents in a Field Order.

5. Engineer's review and approval of a Shop Drawing or Sample shall not relieve Contractor from responsibility for complying with the requirements of Paragraph 7.16.A and B.

6. Engineer's review and approval of a Shop Drawing or Sample, or of a variation from the requirements of the Contract Documents, shall not, under any circumstances, change the Contract Times or Contract Price, unless such changes are included in a Change Order.

7. Neither Engineer's receipt, review, acceptance or approval of a Shop Drawing, Sample, or other submittal shall result in such item becoming a Contract Document.


**Copyright © 2013 National Society of Professional Engineers, American Council of Engineering Companies, and American Society of Civil Engineers. All rights reserved.**

8. Contractor shall perform the Work in compliance with the requirements and commitments set forth in approved Shop Drawings and Samples, subject to the provisions of Paragraph 7.16.D.4.

E. *Resubmittal Procedures*:

1. Contractor shall make corrections required by Engineer and shall return the required number of corrected copies of Shop Drawings and submit, as required, new Samples for review and approval. Contractor shall direct specific attention in writing to revisions other than the corrections called for by Engineer on previous submittals.

2. Contractor shall furnish required submittals with sufficient information and accuracy to obtain required approval of an item with no more than three submittals. Engineer will record Engineer's time for reviewing a fourth or subsequent submittal of a Shop Drawings, sample, or other item requiring approval, and Contractor shall be responsible for Engineer's charges to Owner for such time. Owner may impose a set-off against payments due to Contractor to secure reimbursement for such charges.

3. If Contractor requests a change of a previously approved submittal item, Contractor shall be responsible for Engineer's charges to Owner for its review time, and Owner may impose a set-off against payments due to Contractor to secure reimbursement for such charges, unless the need for such change is beyond the control of Contractor.

*7.17 Contractor's General Warranty and Guarantee*

A. Contractor warrants and guarantees to Owner that all Work will be in accordance with the Contract Documents and will not be defective. Engineer and its officers, directors, members, partners, employees, agents, consultants, and subcontractors shall be entitled to rely on Contractor's warranty and guarantee.

B. Contractor's warranty and guarantee hereunder excludes defects or damage caused by:

1. abuse, modification, or improper maintenance or operation by persons other than Contractor, Subcontractors, Suppliers, or any other individual or entity for whom Contractor is responsible; or

2. normal wear and tear under normal usage.

C. Contractor's obligation to perform and complete the Work in accordance with the Contract Documents shall be absolute. None of the following will constitute an acceptance of Work that is not in accordance with the Contract Documents or a release of Contractor's obligation to perform the Work in accordance with the Contract Documents:

1. observations by Engineer;

2. recommendation by Engineer or payment by Owner of any progress or final payment;

3. the issuance of a certificate of Substantial Completion by Engineer or any payment related thereto by Owner;

4. use or occupancy of the Work or any part thereof by Owner;

5. any review and approval of a Shop Drawing or Sample submittal;

6. the issuance of a notice of acceptability by Engineer;

7. any inspection, test, or approval by others; or

8. any correction of defective Work by Owner.


**Copyright © 2013 National Society of Professional Engineers, American Council of Engineering Companies, and American Society of Civil Engineers. All rights reserved.**

D. If the Contract requires the Contractor to accept the assignment of a contract entered into by Owner, then the specific warranties, guarantees, and correction obligations contained in the assigned contract shall govern with respect to Contractor's performance obligations to Owner for the Work described in the assigned contract.

*7.18 Indemnification*

A. To the fullest extent permitted by Laws and Regulations, and in addition to any other obligations of Contractor under the Contract or otherwise, Contractor shall indemnify and hold harmless Owner and Engineer, and the officers, directors, members, partners, employees, agents, consultants and subcontractors of each and any of them from and against all claims, costs, losses, and damages (including but not limited to all fees and charges of engineers, architects, attorneys, and other professionals and all court or arbitration or other dispute resolution costs) arising out of or relating to the performance of the Work, provided that any such claim, cost, loss, or damage is attributable to bodily injury, sickness, disease, or death, or to injury to or destruction of tangible property (other than the Work itself), including the loss of use resulting therefrom but only to the extent caused by any negligent act or omission of Contractor, any Subcontractor, any Supplier, or any individual or entity directly or indirectly employed by any of them to perform any of the Work or anyone for whose acts any of them may be liable.

B. In any and all claims against Owner or Engineer or any of their officers, directors, members, partners, employees, agents, consultants, or subcontractors by any employee (or the survivor or personal representative of such employee) of Contractor, any Subcontractor, any Supplier, or any individual or entity directly or indirectly employed by any of them to perform any of the Work, or anyone for whose acts any of them may be liable, the indemnification obligation under Paragraph 7.18.A shall not be limited in any way by any limitation on the amount or type of damages, compensation, or benefits payable by or for Contractor or any such Subcontractor, Supplier, or other individual or entity under workers' compensation acts, disability benefit acts, or other employee benefit acts.

C. The indemnification obligations of Contractor under Paragraph 7.18.A shall not extend to the liability of Engineer and Engineer's officers, directors, members, partners, employees, agents, consultants and subcontractors arising out of:

1. the preparation or approval of, or the failure to prepare or approve maps, Drawings, opinions, reports, surveys, Change Orders, designs, or Specifications; or

2. giving directions or instructions, or failing to give them, if that is the primary cause of the injury or damage.

*7.19 Delegation of Professional Design Services*

A. Contractor will not be required to provide professional design services unless such services are specifically required by the Contract Documents for a portion of the Work or unless such services are required to carry out Contractor's responsibilities for construction means, methods, techniques, sequences and procedures. Contractor shall not be required to provide professional services in violation of applicable Laws and Regulations.

B. If professional design services or certifications by a design professional related to systems, materials, or equipment are specifically required of Contractor by the Contract Documents, Owner and Engineer will specify all performance and design criteria that such services must satisfy. Contractor shall cause such services or certifications to be provided by a properly licensed professional, whose signature and seal shall appear on all drawings, calculations, specifications, certifications, and other submittals prepared by such professional. Shop


**Copyright © 2013 National Society of Professional Engineers, American Council of Engineering Companies, and American Society of Civil Engineers. All rights reserved.**

Drawings and other submittals related to the Work designed or certified by such professional, if prepared by others, shall bear such professional's written approval when submitted to Engineer.

C. Owner and Engineer shall be entitled to rely upon the adequacy, accuracy, and completeness of the services, certifications, or approvals performed by such design professionals, provided Owner and Engineer have specified to Contractor all performance and design criteria that such services must satisfy.

D. Pursuant to this paragraph, Engineer's review and approval of design calculations and design drawings will be only for the limited purpose of checking for conformance with performance and design criteria given and the design concept expressed in the Contract Documents. Engineer's review and approval of Shop Drawings and other submittals (except design calculations and design drawings) will be only for the purpose stated in Paragraph 7.16.D.1.

E. Contractor shall not be responsible for the adequacy of the performance or design criteria specified by Owner or Engineer.

**ARTICLE 8 – OTHER WORK AT THE SITE**

*8.01 Other Work*

A. In addition to and apart from the Work under the Contract Documents, the Owner may perform other work at or adjacent to the Site. Such other work may be performed by Owner's employees, or through contracts between the Owner and third parties. Owner may also arrange to have third-party utility owners perform work on their utilities and facilities at or adjacent to the Site.

B. If Owner performs other work at or adjacent to the Site with Owner's employees, or through contracts for such other work, then Owner shall give Contractor written notice thereof prior to starting any such other work. If Owner has advance information regarding the start of any utility work at or adjacent to the Site, Owner shall provide such information to Contractor.

C. Contractor shall afford each other contractor that performs such other work, each utility owner performing other work, and Owner, if Owner is performing other work with Owner's employees, proper and safe access to the Site, and provide a reasonable opportunity for the introduction and storage of materials and equipment and the execution of such other work. Contractor shall do all cutting, fitting, and patching of the Work that may be required to properly connect or otherwise make its several parts come together and properly integrate with such other work. Contractor shall not endanger any work of others by cutting, excavating, or otherwise altering such work; provided, however, that Contractor may cut or alter others' work with the written consent of Engineer and the others whose work will be affected.

D. If the proper execution or results of any part of Contractor's Work depends upon work performed by others under this Article 8, Contractor shall inspect such other work and promptly report to Engineer in writing any delays, defects, or deficiencies in such other work that render it unavailable or unsuitable for the proper execution and results of Contractor's Work. Contractor's failure to so report will constitute an acceptance of such other work as fit and proper for integration with Contractor's Work except for latent defects and deficiencies in such other work.


**Copyright © 2013 National Society of Professional Engineers, American Council of Engineering Companies, and American Society of Civil Engineers. All rights reserved.**

*8.02 Coordination*

A. If Owner intends to contract with others for the performance of other work at or adjacent to the Site, to perform other work at or adjacent to the Site with Owner's employees, or to arrange to have utility owners perform work at or adjacent to the Site, the following will be set forth in the Supplementary Conditions or provided to Contractor prior to the start of any such other work:

1. the identity of the individual or entity that will have authority and responsibility for coordination of the activities among the various contractors;

2. an itemization of the specific matters to be covered by such authority and responsibility; and

3. the extent of such authority and responsibilities.

B. Unless otherwise provided in the Supplementary Conditions, Owner shall have sole authority and responsibility for such coordination.

*8.03 Legal Relationships*

A. If, in the course of performing other work at or adjacent to the Site for Owner, the Owner's employees, any other contractor working for Owner, or any utility owner for whom the Owner is responsible causes damage to the Work or to the property of Contractor or its Subcontractors, or delays, disrupts, interferes with, or increases the scope or cost of the performance of the Work, through actions or inaction, then Contractor shall be entitled to an equitable adjustment in the Contract Price or the Contract Times, or both. Contractor must submit any Change Proposal seeking an equitable adjustment in the Contract Price or the Contract Times under this paragraph within 30 days of the damaging, delaying, disrupting, or interfering event. The entitlement to, and extent of, any such equitable adjustment shall take into account information (if any) regarding such other work that was provided to Contractor in the Contract Documents prior to the submittal of the Bid or the final negotiation of the terms of the Contract. When applicable, any such equitable adjustment in Contract Price shall be conditioned on Contractor assigning to Owner all Contractor's rights against such other contractor or utility owner with respect to the damage, delay, disruption, or interference that is the subject of the adjustment. Contractor's entitlement to an adjustment of the Contract Times is conditioned on such adjustment being essential to Contractor's ability to complete the Work within the Contract Times.

B. Contractor shall take reasonable and customary measures to avoid damaging, delaying, disrupting, or interfering with the work of Owner, any other contractor, or any utility owner performing other work at or adjacent to the Site. If Contractor fails to take such measures and as a result damages, delays, disrupts, or interferes with the work of any such other contractor or utility owner, then Owner may impose a set-off against payments due to Contractor, and assign to such other contractor or utility owner the Owner's contractual rights against Contractor with respect to the breach of the obligations set forth in this paragraph.

C. When Owner is performing other work at or adjacent to the Site with Owner's employees, Contractor shall be liable to Owner for damage to such other work, and for the reasonable direct delay, disruption, and interference costs incurred by Owner as a result of Contractor's failure to take reasonable and customary measures with respect to Owner's other work. In response to such damage, delay, disruption, or interference, Owner may impose a set-off against payments due to Contractor.


**Copyright © 2013 National Society of Professional Engineers, American Council of Engineering Companies, and American Society of Civil Engineers. All rights reserved.**

D. If Contractor damages, delays, disrupts, or interferes with the work of any other contractor, or any utility owner performing other work at or adjacent to the Site, through Contractor's failure to take reasonable and customary measures to avoid such impacts, or if any claim arising out of Contractor's actions, inactions, or negligence in performance of the Work at or adjacent to the Site is made by any such other contractor or utility owner against Contractor, Owner, or Engineer, then Contractor shall (1) promptly attempt to settle the claim as to all parties through negotiations with such other contractor or utility owner, or otherwise resolve the claim by arbitration or other dispute resolution proceeding or at law, and (2) indemnify and hold harmless Owner and Engineer, and the officers, directors, members, partners, employees, agents, consultants and subcontractors of each and any of them from and against any such claims, and against all costs, losses, and damages (including but not limited to all fees and charges of engineers, architects, attorneys, and other professionals and all court or arbitration or other dispute resolution costs) arising out of or relating to such damage, delay, disruption, or interference.

**ARTICLE 9 – OWNER'S RESPONSIBILITIES**

*9.01 Communications to Contractor*

A. Except as otherwise provided in these General Conditions, Owner shall issue all communications to Contractor through Engineer.

*9.02 Replacement of Engineer*

A. Owner may at its discretion appoint an engineer to replace Engineer, provided Contractor makes no reasonable objection to the replacement engineer. The replacement engineer's status under the Contract Documents shall be that of the former Engineer.

*9.03 Furnish Data*

A. Owner shall promptly furnish the data required of Owner under the Contract Documents.

*9.04 Pay When Due*

A. Owner shall make payments to Contractor when they are due as provided in the Agreement.

*9.05 Lands and Easements; Reports, Tests, and Drawings*

A. Owner's duties with respect to providing lands and easements are set forth in Paragraph 5.01.

B. Owner's duties with respect to providing engineering surveys to establish reference points are set forth in Paragraph 4.03.

C. Article 5 refers to Owner's identifying and making available to Contractor copies of reports of explorations and tests of conditions at the Site, and drawings of physical conditions relating to existing surface or subsurface structures at the Site.

*9.06 Insurance*

A. Owner's responsibilities, if any, with respect to purchasing and maintaining liability and property insurance are set forth in Article 6.

*9.07 Change Orders*

A. Owner's responsibilities with respect to Change Orders are set forth in Article 11.


**Copyright © 2013 National Society of Professional Engineers, American Council of Engineering Companies, and American Society of Civil Engineers. All rights reserved.**

*9.08 Inspections, Tests, and Approvals*

A. Owner's responsibility with respect to certain inspections, tests, and approvals is set forth in Paragraph 14.02.B.

*9.09 Limitations on Owner's Responsibilities*

A. The Owner shall not supervise, direct, or have control or authority over, nor be responsible for, Contractor's means, methods, techniques, sequences, or procedures of construction, or the safety precautions and programs incident thereto, or for any failure of Contractor to comply with Laws and Regulations applicable to the performance of the Work. Owner will not be responsible for Contractor's failure to perform the Work in accordance with the Contract Documents.

*9.10 Undisclosed Hazardous Environmental Condition*

A. Owner's responsibility in respect to an undisclosed Hazardous Environmental Condition is set forth in Paragraph 5.06.

*9.11 Evidence of Financial Arrangements*

A. Upon request of Contractor, Owner shall furnish Contractor reasonable evidence that financial arrangements have been made to satisfy Owner's obligations under the Contract Documents (including obligations under proposed changes in the Work).

*9.12 Safety Programs*

A. While at the Site, Owner's employees and representatives shall comply with the specific applicable requirements of Contractor's safety programs of which Owner has been informed.

B. Owner shall furnish copies of any applicable Owner safety programs to Contractor.

**ARTICLE 10 – ENGINEER'S STATUS DURING CONSTRUCTION**

*10.01 Owner's Representative*

A. Engineer will be Owner's representative during the construction period. The duties and responsibilities and the limitations of authority of Engineer as Owner's representative during construction are set forth in the Contract.

*10.02 Visits to Site*

A. Engineer will make visits to the Site at intervals appropriate to the various stages of construction as Engineer deems necessary in order to observe as an experienced and qualified design professional the progress that has been made and the quality of the various aspects of Contractor's executed Work. Based on information obtained during such visits and observations, Engineer, for the benefit of Owner, will determine, in general, if the Work is proceeding in accordance with the Contract Documents. Engineer will not be required to make exhaustive or continuous inspections on the Site to check the quality or quantity of the Work. Engineer's efforts will be directed toward providing for Owner a greater degree of confidence that the completed Work will conform generally to the Contract Documents. On the basis of such visits and observations, Engineer will keep Owner informed of the progress of the Work and will endeavor to guard Owner against defective Work.

B. Engineer's visits and observations are subject to all the limitations on Engineer's authority and responsibility set forth in Paragraph 10.08. Particularly, but without limitation, during


**Copyright © 2013 National Society of Professional Engineers, American Council of Engineering Companies, and American Society of Civil Engineers. All rights reserved.**

or as a result of Engineer's visits or observations of Contractor's Work, Engineer will not supervise, direct, control, or have authority over or be responsible for Contractor's means, methods, techniques, sequences, or procedures of construction, or the safety precautions and programs incident thereto, or for any failure of Contractor to comply with Laws and Regulations applicable to the performance of the Work.

*10.03 Project Representative*

A. If Owner and Engineer have agreed that Engineer will furnish a Resident Project Representative to represent Engineer at the Site and assist Engineer in observing the progress and quality of the Work, then the authority and responsibilities of any such Resident Project Representative will be as provided in the Supplementary Conditions, and limitations on the responsibilities thereof will be as provided in Paragraph 10.08. If Owner designates another representative or agent to represent Owner at the Site who is not Engineer's consultant, agent, or employee, the responsibilities and authority and limitations thereon of such other individual or entity will be as provided in the Supplementary Conditions.

*10.04 Rejecting Defective Work*

A. Engineer has the authority to reject Work in accordance with Article 14.

*10.05 Shop Drawings, Change Orders and Payments*

A. Engineer's authority, and limitations thereof, as to Shop Drawings and Samples, are set forth in Paragraph 7.16.

B. Engineer's authority, and limitations thereof, as to design calculations and design drawings submitted in response to a delegation of professional design services, if any, are set forth in Paragraph 7.19.

C. Engineer's authority as to Change Orders is set forth in Article 11.

D. Engineer's authority as to Applications for Payment is set forth in Article 15.

*10.06 Determinations for Unit Price Work*

A. Engineer will determine the actual quantities and classifications of Unit Price Work performed by Contractor as set forth in Paragraph 13.03.

*10.07 Decisions on Requirements of Contract Documents and Acceptability of Work*

A. Engineer will render decisions regarding the requirements of the Contract Documents, and judge the acceptability of the Work, pursuant to the specific procedures set forth herein for initial interpretations, Change Proposals, and acceptance of the Work. In rendering such decisions and judgments, Engineer will not show partiality to Owner or Contractor, and will not be liable to Owner, Contractor, or others in connection with any proceedings, interpretations, decisions, or judgments conducted or rendered in good faith.

*10.08 Limitations on Engineer's Authority and Responsibilities*

A. Neither Engineer's authority or responsibility under this Article 10 or under any other provision of the Contract, nor any decision made by Engineer in good faith either to exercise or not exercise such authority or responsibility or the undertaking, exercise, or performance of any authority or responsibility by Engineer, shall create, impose, or give rise to any duty in contract, tort, or otherwise owed by Engineer to Contractor, any Subcontractor, any Supplier, any other individual or entity, or to any surety for or employee or agent of any of them.


**Copyright © 2013 National Society of Professional Engineers, American Council of Engineering Companies, and American Society of Civil Engineers. All rights reserved.**

B. Engineer will not supervise, direct, control, or have authority over or be responsible for Contractor's means, methods, techniques, sequences, or procedures of construction, or the safety precautions and programs incident thereto, or for any failure of Contractor to comply with Laws and Regulations applicable to the performance of the Work. Engineer will not be responsible for Contractor's failure to perform the Work in accordance with the Contract Documents.

C. Engineer will not be responsible for the acts or omissions of Contractor or of any Subcontractor, any Supplier, or of any other individual or entity performing any of the Work.

D. Engineer's review of the final Application for Payment and accompanying documentation and all maintenance and operating instructions, schedules, guarantees, bonds, certificates of inspection, tests and approvals, and other documentation required to be delivered by Paragraph 15.06.A will only be to determine generally that their content complies with the requirements of, and in the case of certificates of inspections, tests, and approvals, that the results certified indicate compliance with the Contract Documents.

E. The limitations upon authority and responsibility set forth in this Paragraph 10.08 shall also apply to the Resident Project Representative, if any.

*10.09 Compliance with Safety Program*

A. While at the Site, Engineer's employees and representatives will comply with the specific applicable requirements of Owner's and Contractor's safety programs (if any) of which Engineer has been informed.

**ARTICLE 11 – AMENDING THE CONTRACT DOCUMENTS; CHANGES IN THE WORK**

*11.01 Amending and Supplementing Contract Documents*

A. The Contract Documents may be amended or supplemented by a Change Order, a Work Change Directive, or a Field Order.

1. *Change Orders*:

a. If an amendment or supplement to the Contract Documents includes a change in the Contract Price or the Contract Times, such amendment or supplement must be set forth in a Change Order. A Change Order also may be used to establish amendments and supplements of the Contract Documents that do not affect the Contract Price or Contract Times.

b. Owner and Contractor may amend those terms and conditions of the Contract Documents that do not involve (1) the performance or acceptability of the Work, (2) the design (as set forth in the Drawings, Specifications, or otherwise), or (3) other engineering or technical matters, without the recommendation of the Engineer. Such an amendment shall be set forth in a Change Order.

2. *Work Change Directives*: A Work Change Directive will not change the Contract Price or the Contract Times but is evidence that the parties expect that the modification ordered or documented by a Work Change Directive will be incorporated in a subsequently issued Change Order, following negotiations by the parties as to the Work Change Directive's effect, if any, on the Contract Price and Contract Times; or, if negotiations are unsuccessful, by a determination under the terms of the Contract Documents governing adjustments, expressly including Paragraph 11.04 regarding change of Contract Price. Contractor must submit any Change Proposal seeking an


**Copyright © 2013 National Society of Professional Engineers, American Council of Engineering Companies, and American Society of Civil Engineers. All rights reserved.**

adjustment of the Contract Price or the Contract Times, or both, no later than 30 days after the completion of the Work set out in the Work Change Directive. Owner must submit any Claim seeking an adjustment of the Contract Price or the Contract Times, or both, no later than 60 days after issuance of the Work Change Directive.

3. *Field Orders*: Engineer may authorize minor changes in the Work if the changes do not involve an adjustment in the Contract Price or the Contract Times and are compatible with the design concept of the completed Project as a functioning whole as indicated by the Contract Documents. Such changes will be accomplished by a Field Order and will be binding on Owner and also on Contractor, which shall perform the Work involved promptly. If Contractor believes that a Field Order justifies an adjustment in the Contract Price or Contract Times, or both, then before proceeding with the Work at issue, Contractor shall submit a Change Proposal as provided herein.

*11.02 Owner-Authorized Changes in the Work*

A. Without invalidating the Contract and without notice to any surety, Owner may, at any time or from time to time, order additions, deletions, or revisions in the Work. Such changes shall be supported by Engineer's recommendation, to the extent the change involves the design (as set forth in the Drawings, Specifications, or otherwise), or other engineering or technical matters. Such changes may be accomplished by a Change Order, if Owner and Contractor have agreed as to the effect, if any, of the changes on Contract Times or Contract Price; or by a Work Change Directive. Upon receipt of any such document, Contractor shall promptly proceed with the Work involved; or, in the case of a deletion in the Work, promptly cease construction activities with respect to such deleted Work. Added or revised Work shall be performed under the applicable conditions of the Contract Documents. Nothing in this paragraph shall obligate Contractor to undertake work that Contractor reasonably concludes cannot be performed in a manner consistent with Contractor's safety obligations under the Contract Documents or Laws and Regulations.

*11.03 Unauthorized Changes in the Work*

A. Contractor shall not be entitled to an increase in the Contract Price or an extension of the Contract Times with respect to any work performed that is not required by the Contract Documents, as amended, modified, or supplemented, except in the case of an emergency as provided in Paragraph 7.15 or in the case of uncovering Work as provided in Paragraph 14.05.

*11.04 Change of Contract Price*

A. The Contract Price may only be changed by a Change Order. Any Change Proposal for an adjustment in the Contract Price shall comply with the provisions of Paragraph 11.06. Any Claim for an adjustment of Contract Price shall comply with the provisions of Article 12.

B. An adjustment in the Contract Price will be determined as follows:

1. where the Work involved is covered by unit prices contained in the Contract Documents, then by application of such unit prices to the quantities of the items involved (subject to the provisions of Paragraph 13.03); or

2. where the Work involved is not covered by unit prices contained in the Contract Documents, then by a mutually agreed lump sum (which may include an allowance for overhead and profit not necessarily in accordance with Paragraph 11.04.C.2); or

3. where the Work involved is not covered by unit prices contained in the Contract Documents and the parties do not reach mutual agreement to a lump sum, then on


**Copyright © 2013 National Society of Professional Engineers, American Council of Engineering Companies, and American Society of Civil Engineers. All rights reserved.**

the basis of the Cost of the Work (determined as provided in Paragraph 13.01) plus a Contractor's fee for overhead and profit (determined as provided in Paragraph 11.04.C).

C. *Contractor's Fee*: When applicable, the Contractor's fee for overhead and profit shall be determined as follows:

1. a mutually acceptable fixed fee; or

2. if a fixed fee is not agreed upon, then a fee based on the following percentages of the various portions of the Cost of the Work:

a. for costs incurred under Paragraphs 13.01.B.1 and 13.01.B.2, the Contractor's fee shall be 15 percent;

b. for costs incurred under Paragraph 13.01.B.3, the Contractor's fee shall be five percent;

c. where one or more tiers of subcontracts are on the basis of Cost of the Work plus a fee and no fixed fee is agreed upon, the intent of Paragraphs 11.04.C.2.a and 11.04.C.2.b is that the Contractor's fee shall be based on: (1) a fee of 15 percent of the costs incurred under Paragraphs 13.01.A.1 and 13.01.A.2 by the Subcontractor that actually performs the Work, at whatever tier, and (2) with respect to Contractor itself and to any Subcontractors of a tier higher than that of the Subcontractor that actually performs the Work, a fee of five percent of the amount (fee plus underlying costs incurred) attributable to the next lower tier Subcontractor; provided, however, that for any such subcontracted work the maximum total fee to be paid by Owner shall be no greater than 27 percent of the costs incurred by the Subcontractor that actually performs the work;

d. no fee shall be payable on the basis of costs itemized under Paragraphs 13.01.B.4, 13.01.B.5, and 13.01.C;

e. the amount of credit to be allowed by Contractor to Owner for any change which results in a net decrease in cost will be the amount of the actual net decrease in cost plus a deduction in Contractor's fee by an amount equal to five percent of such net decrease; and

f. when both additions and credits are involved in any one change, the adjustment in Contractor's fee shall be computed on the basis of the net change in accordance with Paragraphs 11.04.C.2.a through 11.04.C.2.e, inclusive.

*11.05 Change of Contract Times*

A. The Contract Times may only be changed by a Change Order. Any Change Proposal for an adjustment in the Contract Times shall comply with the provisions of Paragraph 11.06. Any Claim for an adjustment in the Contract Times shall comply with the provisions of Article 12.

B. An adjustment of the Contract Times shall be subject to the limitations set forth in Paragraph 4.05, concerning delays in Contractor's progress.

*11.06 Change Proposals*

A. Contractor shall submit a Change Proposal to Engineer to request an adjustment in the Contract Times or Contract Price; appeal an initial decision by Engineer concerning the requirements of the Contract Documents or relating to the acceptability of the Work under the Contract Documents; contest a set-off against payment due; or seek other relief under


**Copyright © 2013 National Society of Professional Engineers, American Council of Engineering Companies, and American Society of Civil Engineers. All rights reserved.**

the Contract. The Change Proposal shall specify any proposed change in Contract Times or Contract Price, or both, or other proposed relief, and explain the reason for the proposed change, with citations to any governing or applicable provisions of the Contract Documents.

1. *Procedures*: Contractor shall submit each Change Proposal to Engineer promptly (but in no event later than 30 days) after the start of the event giving rise thereto, or after such initial decision. The Contractor shall submit supporting data, including the proposed change in Contract Price or Contract Time (if any), to the Engineer and Owner within 15 days after the submittal of the Change Proposal. The supporting data shall be accompanied by a written statement that the supporting data are accurate and complete, and that any requested time or price adjustment is the entire adjustment to which Contractor believes it is entitled as a result of said event. Engineer will advise Owner regarding the Change Proposal, and consider any comments or response from Owner regarding the Change Proposal.

2. *Engineer's Action*: Engineer will review each Change Proposal and, within 30 days after receipt of the Contractor's supporting data, either deny the Change Proposal in whole, approve it in whole, or deny it in part and approve it in part. Such actions shall be in writing, with a copy provided to Owner and Contractor. If Engineer does not take action on the Change Proposal within 30 days, then either Owner or Contractor may at any time thereafter submit a letter to the other party indicating that as a result of Engineer's inaction the Change Proposal is deemed denied, thereby commencing the time for appeal of the denial under Article 12.

3. *Binding Decision*: Engineer's decision will be final and binding upon Owner and Contractor, unless Owner or Contractor appeals the decision by filing a Claim under Article 12.

B. *Resolution of Certain Change Proposals*: If the Change Proposal does not involve the design (as set forth in the Drawings, Specifications, or otherwise), the acceptability of the Work, or other engineering or technical matters, then Engineer will notify the parties that the Engineer is unable to resolve the Change Proposal. For purposes of further resolution of such a Change Proposal, such notice shall be deemed a denial, and Contractor may choose to seek resolution under the terms of Article 12.

*11.07 Execution of Change Orders*

A. Owner and Contractor shall execute appropriate Change Orders covering:

1. changes in the Contract Price or Contract Times which are agreed to by the parties, including any undisputed sum or amount of time for Work actually performed in accordance with a Work Change Directive;

2. changes in Contract Price resulting from an Owner set-off, unless Contractor has duly contested such set-off;

3. changes in the Work which are: (a) ordered by Owner pursuant to Paragraph 11.02, (b) required because of Owner's acceptance of defective Work under Paragraph 14.04 or Owner's correction of defective Work under Paragraph 14.07, or (c) agreed to by the parties, subject to the need for Engineer's recommendation if the change in the Work involves the design (as set forth in the Drawings, Specifications, or otherwise), or other engineering or technical matters; and

4. changes in the Contract Price or Contract Times, or other changes, which embody the substance of any final and binding results under Paragraph 11.06, or Article 12.


**Copyright © 2013 National Society of Professional Engineers, American Council of Engineering Companies, and American Society of Civil Engineers. All rights reserved.**

B. If Owner or Contractor refuses to execute a Change Order that is required to be executed under the terms of this Paragraph 11.07, it shall be deemed to be of full force and effect, as if fully executed.

*11.08 Notification to Surety*

A. If the provisions of any bond require notice to be given to a surety of any change affecting the general scope of the Work or the provisions of the Contract Documents (including, but not limited to, Contract Price or Contract Times), the giving of any such notice will be Contractor's responsibility. The amount of each applicable bond will be adjusted to reflect the effect of any such change.

**ARTICLE 12 – CLAIMS**

*12.01 Claims*

A. *Claims Process*: The following disputes between Owner and Contractor shall be submitted to the Claims process set forth in this Article:

1. Appeals by Owner or Contractor of Engineer's decisions regarding Change Proposals;

2. Owner demands for adjustments in the Contract Price or Contract Times, or other relief under the Contract Documents; and

3. Disputes that Engineer has been unable to address because they do not involve the design (as set forth in the Drawings, Specifications, or otherwise), the acceptability of the Work, or other engineering or technical matters.

B. *Submittal of Claim*: The party submitting a Claim shall deliver it directly to the other party to the Contract promptly (but in no event later than 30 days) after the start of the event giving rise thereto; in the case of appeals regarding Change Proposals within 30 days of the decision under appeal. The party submitting the Claim shall also furnish a copy to the Engineer, for its information only. The responsibility to substantiate a Claim shall rest with the party making the Claim. In the case of a Claim by Contractor seeking an increase in the Contract Times or Contract Price, or both, Contractor shall certify that the Claim is made in good faith, that the supporting data are accurate and complete, and that to the best of Contractor's knowledge and belief the amount of time or money requested accurately reflects the full amount to which Contractor is entitled.

C. *Review and Resolution*: The party receiving a Claim shall review it thoroughly, giving full consideration to its merits. The two parties shall seek to resolve the Claim through the exchange of information and direct negotiations. The parties may extend the time for resolving the Claim by mutual agreement. All actions taken on a Claim shall be stated in writing and submitted to the other party, with a copy to Engineer.

D. *Mediation*:

1. At any time after initiation of a Claim, Owner and Contractor may mutually agree to mediation of the underlying dispute. The agreement to mediate shall stay the Claim submittal and response process.

2. If Owner and Contractor agree to mediation, then after 60 days from such agreement, either Owner or Contractor may unilaterally terminate the mediation process, and the Claim submittal and decision process shall resume as of the date of the termination. If the mediation proceeds but is unsuccessful in resolving the dispute, the Claim


**Copyright © 2013 National Society of Professional Engineers, American Council of Engineering Companies, and American Society of Civil Engineers. All rights reserved.**

submittal and decision process shall resume as of the date of the conclusion of the mediation, as determined by the mediator.

3. Owner and Contractor shall each pay one-half of the mediator's fees and costs.

E. *Partial Approval*: If the party receiving a Claim approves the Claim in part and denies it in part, such action shall be final and binding unless within 30 days of such action the other party invokes the procedure set forth in Article 17 for final resolution of disputes.

F. *Denial of Claim*: If efforts to resolve a Claim are not successful, the party receiving the Claim may deny it by giving written notice of denial to the other party. If the receiving party does not take action on the Claim within 90 days, then either Owner or Contractor may at any time thereafter submit a letter to the other party indicating that as a result of the inaction, the Claim is deemed denied, thereby commencing the time for appeal of the denial. A denial of the Claim shall be final and binding unless within 30 days of the denial the other party invokes the procedure set forth in Article 17 for the final resolution of disputes.

G. *Final and Binding Results*: If the parties reach a mutual agreement regarding a Claim, whether through approval of the Claim, direct negotiations, mediation, or otherwise; or if a Claim is approved in part and denied in part, or denied in full, and such actions become final and binding; then the results of the agreement or action on the Claim shall be incorporated in a Change Order to the extent they affect the Contract, including the Work, the Contract Times, or the Contract Price.

## ARTICLE 13 – COST OF THE WORK; ALLOWANCES; UNIT PRICE WORK

### *13.01 Cost of the Work*

A. *Purposes for Determination of Cost of the Work*: The term Cost of the Work means the sum of all costs necessary for the proper performance of the Work at issue, as further defined below. The provisions of this Paragraph 13.01 are used for two distinct purposes:

1. To determine Cost of the Work when Cost of the Work is a component of the Contract Price, under cost-plus-fee, time-and-materials, or other cost-based terms; or

2. To determine the value of a Change Order, Change Proposal, Claim, set-off, or other adjustment in Contract Price. When the value of any such adjustment is determined on the basis of Cost of the Work, Contractor is entitled only to those additional or incremental costs required because of the change in the Work or because of the event giving rise to the adjustment.

B. *Costs Included*: Except as otherwise may be agreed to in writing by Owner, costs included in the Cost of the Work shall be in amounts no higher than those prevailing in the locality of the Project, shall not include any of the costs itemized in Paragraph 13.01.C, and shall include only the following items:

1. Payroll costs for employees in the direct employ of Contractor in the performance of the Work under schedules of job classifications agreed upon by Owner and Contractor. Such employees shall include, without limitation, superintendents, foremen, and other personnel employed full time on the Work. Payroll costs for employees not employed full time on the Work shall be apportioned on the basis of their time spent on the Work. Payroll costs shall include, but not be limited to, salaries and wages plus the cost of fringe benefits, which shall include social security contributions, unemployment, excise, and payroll taxes, workers' compensation, health and retirement benefits, bonuses, sick leave, and vacation and holiday pay applicable


**Copyright © 2013 National Society of Professional Engineers, American Council of Engineering Companies, and American Society of Civil Engineers. All rights reserved.**

thereto. The expenses of performing Work outside of regular working hours, on Saturday, Sunday, or legal holidays, shall be included in the above to the extent authorized by Owner.

2. Cost of all materials and equipment furnished and incorporated in the Work, including costs of transportation and storage thereof, and Suppliers' field services required in connection therewith. All cash discounts shall accrue to Contractor unless Owner deposits funds with Contractor with which to make payments, in which case the cash discounts shall accrue to Owner. All trade discounts, rebates, and refunds and returns from sale of surplus materials and equipment shall accrue to Owner, and Contractor shall make provisions so that they may be obtained.

3. Payments made by Contractor to Subcontractors for Work performed by Subcontractors. If required by Owner, Contractor shall obtain competitive bids from subcontractors acceptable to Owner and Contractor and shall deliver such bids to Owner, who will then determine, with the advice of Engineer, which bids, if any, will be acceptable. If any subcontract provides that the Subcontractor is to be paid on the basis of Cost of the Work plus a fee, the Subcontractor's Cost of the Work and fee shall be determined in the same manner as Contractor's Cost of the Work and fee as provided in this Paragraph 13.01.

4. Costs of special consultants (including but not limited to engineers, architects, testing laboratories, surveyors, attorneys, and accountants) employed for services specifically related to the Work.

5. Supplemental costs including the following:

    a. The proportion of necessary transportation, travel, and subsistence expenses of Contractor's employees incurred in discharge of duties connected with the Work.

    b. Cost, including transportation and maintenance, of all materials, supplies, equipment, machinery, appliances, office, and temporary facilities at the Site, and hand tools not owned by the workers, which are consumed in the performance of the Work, and cost, less market value, of such items used but not consumed which remain the property of Contractor.

    c. Rentals of all construction equipment and machinery, and the parts thereof, whether rented from Contractor or others in accordance with rental agreements approved by Owner with the advice of Engineer, and the costs of transportation, loading, unloading, assembly, dismantling, and removal thereof. All such costs shall be in accordance with the terms of said rental agreements. The rental of any such equipment, machinery, or parts shall cease when the use thereof is no longer necessary for the Work.

    d. Sales, consumer, use, and other similar taxes related to the Work, and for which Contractor is liable, as imposed by Laws and Regulations.

    e. Deposits lost for causes other than negligence of Contractor, any Subcontractor, or anyone directly or indirectly employed by any of them or for whose acts any of them may be liable, and royalty payments and fees for permits and licenses.

    f. Losses and damages (and related expenses) caused by damage to the Work, not compensated by insurance or otherwise, sustained by Contractor in connection with the performance of the Work (except losses and damages within the deductible amounts of property insurance established in accordance with Paragraph 6.05), provided such losses and damages have resulted from causes


Copyright © 2013 National Society of Professional Engineers, American Council of Engineering Companies, and American Society of Civil Engineers. All rights reserved.

other than the negligence of Contractor, any Subcontractor, or anyone directly or indirectly employed by any of them or for whose acts any of them may be liable. Such losses shall include settlements made with the written consent and approval of Owner. No such losses, damages, and expenses shall be included in the Cost of the Work for the purpose of determining Contractor's fee.

g. The cost of utilities, fuel, and sanitary facilities at the Site.

h. Minor expenses such as communication service at the Site, express and courier services, and similar petty cash items in connection with the Work.

i. The costs of premiums for all bonds and insurance that Contractor is required by the Contract Documents to purchase and maintain.

C. *Costs Excluded*: The term Cost of the Work shall not include any of the following items:

1. Payroll costs and other compensation of Contractor's officers, executives, principals (of partnerships and sole proprietorships), general managers, safety managers, engineers, architects, estimators, attorneys, auditors, accountants, purchasing and contracting agents, expediters, timekeepers, clerks, and other personnel employed by Contractor, whether at the Site or in Contractor's principal or branch office for general administration of the Work and not specifically included in the agreed upon schedule of job classifications referred to in Paragraph 13.01.B.1 or specifically covered by Paragraph 13.01.B.4. The payroll costs and other compensation excluded here are to be considered administrative costs covered by the Contractor's fee.

2. Expenses of Contractor's principal and branch offices other than Contractor's office at the Site.

3. Any part of Contractor's capital expenses, including interest on Contractor's capital employed for the Work and charges against Contractor for delinquent payments.

4. Costs due to the negligence of Contractor, any Subcontractor, or anyone directly or indirectly employed by any of them or for whose acts any of them may be liable, including but not limited to, the correction of defective Work, disposal of materials or equipment wrongly supplied, and making good any damage to property.

5. Other overhead or general expense costs of any kind and the costs of any item not specifically and expressly included in Paragraph 13.01.B.

D. *Contractor's Fee*: When the Work as a whole is performed on the basis of cost-plus, Contractor's fee shall be determined as set forth in the Agreement. When the value of any Work covered by a Change Order, Change Proposal, Claim, set-off, or other adjustment in Contract Price is determined on the basis of Cost of the Work, Contractor's fee shall be determined as set forth in Paragraph 11.04.C.

E. *Documentation*: Whenever the Cost of the Work for any purpose is to be determined pursuant to this Article 13, Contractor will establish and maintain records thereof in accordance with generally accepted accounting practices and submit in a form acceptable to Engineer an itemized cost breakdown together with supporting data.

*13.02 Allowances*

A. It is understood that Contractor has included in the Contract Price all allowances so named in the Contract Documents and shall cause the Work so covered to be performed for such sums and by such persons or entities as may be acceptable to Owner and Engineer.


**Copyright © 2013 National Society of Professional Engineers, American Council of Engineering Companies, and American Society of Civil Engineers. All rights reserved.**

B. *Cash Allowances*: Contractor agrees that:

1. the cash allowances include the cost to Contractor (less any applicable trade discounts) of materials and equipment required by the allowances to be delivered at the Site, and all applicable taxes; and

2. Contractor's costs for unloading and handling on the Site, labor, installation, overhead, profit, and other expenses contemplated for the cash allowances have been included in the Contract Price and not in the allowances, and no demand for additional payment on account of any of the foregoing will be valid.

C. *Contingency Allowance*: Contractor agrees that a contingency allowance, if any, is for the sole use of Owner to cover unanticipated costs.

D. Prior to final payment, an appropriate Change Order will be issued as recommended by Engineer to reflect actual amounts due Contractor on account of Work covered by allowances, and the Contract Price shall be correspondingly adjusted.

*13.03 Unit Price Work*

A. Where the Contract Documents provide that all or part of the Work is to be Unit Price Work, initially the Contract Price will be deemed to include for all Unit Price Work an amount equal to the sum of the unit price for each separately identified item of Unit Price Work times the estimated quantity of each item as indicated in the Agreement.

B. The estimated quantities of items of Unit Price Work are not guaranteed and are solely for the purpose of comparison of Bids and determining an initial Contract Price. Payments to Contractor for Unit Price Work will be based on actual quantities.

C. Each unit price will be deemed to include an amount considered by Contractor to be adequate to cover Contractor's overhead and profit for each separately identified item.

D. Engineer will determine the actual quantities and classifications of Unit Price Work performed by Contractor. Engineer will review with Contractor the Engineer's preliminary determinations on such matters before rendering a written decision thereon (by recommendation of an Application for Payment or otherwise). Engineer's written decision thereon will be final and binding (except as modified by Engineer to reflect changed factual conditions or more accurate data) upon Owner and Contractor, subject to the provisions of the following paragraph.

E. Within 30 days of Engineer's written decision under the preceding paragraph, Contractor may submit a Change Proposal, or Owner may file a Claim, seeking an adjustment in the Contract Price if:

1. the quantity of any item of Unit Price Work performed by Contractor differs materially and significantly from the estimated quantity of such item indicated in the Agreement;

2. there is no corresponding adjustment with respect to any other item of Work; and

3. Contractor believes that it is entitled to an increase in Contract Price as a result of having incurred additional expense or Owner believes that Owner is entitled to a decrease in Contract Price, and the parties are unable to agree as to the amount of any such increase or decrease.


**Copyright © 2013 National Society of Professional Engineers, American Council of Engineering Companies, and American Society of Civil Engineers. All rights reserved.**

## ARTICLE 14 – TESTS AND INSPECTIONS; CORRECTION, REMOVAL OR ACCEPTANCE OF DEFECTIVE WORK

*14.01 Access to Work*

A. Owner, Engineer, their consultants and other representatives and personnel of Owner, independent testing laboratories, and authorities having jurisdiction will have access to the Site and the Work at reasonable times for their observation, inspection, and testing. Contractor shall provide them proper and safe conditions for such access and advise them of Contractor's safety procedures and programs so that they may comply therewith as applicable.

*14.02 Tests, Inspections, and Approvals*

A. Contractor shall give Engineer timely notice of readiness of the Work (or specific parts thereof) for all required inspections and tests, and shall cooperate with inspection and testing personnel to facilitate required inspections and tests.

B. Owner shall retain and pay for the services of an independent inspector, testing laboratory, or other qualified individual or entity to perform all inspections and tests expressly required by the Contract Documents to be furnished and paid for by Owner, except that costs incurred in connection with tests or inspections of covered Work shall be governed by the provisions of Paragraph 14.05.

C. If Laws or Regulations of any public body having jurisdiction require any Work (or part thereof) specifically to be inspected, tested, or approved by an employee or other representative of such public body, Contractor shall assume full responsibility for arranging and obtaining such inspections, tests, or approvals, pay all costs in connection therewith, and furnish Engineer the required certificates of inspection or approval.

D. Contractor shall be responsible for arranging, obtaining, and paying for all inspections and tests required:

1. by the Contract Documents, unless the Contract Documents expressly allocate responsibility for a specific inspection or test to Owner;
2. to attain Owner's and Engineer's acceptance of materials or equipment to be incorporated in the Work;
3. by manufacturers of equipment furnished under the Contract Documents;
4. for testing, adjusting, and balancing of mechanical, electrical, and other equipment to be incorporated into the Work; and
5. for acceptance of materials, mix designs, or equipment submitted for approval prior to Contractor's purchase thereof for incorporation in the Work.

Such inspections and tests shall be performed by independent inspectors, testing laboratories, or other qualified individuals or entities acceptable to Owner and Engineer.

E. If the Contract Documents require the Work (or part thereof) to be approved by Owner, Engineer, or another designated individual or entity, then Contractor shall assume full responsibility for arranging and obtaining such approvals.

F. If any Work (or the work of others) that is to be inspected, tested, or approved is covered by Contractor without written concurrence of Engineer, Contractor shall, if requested by Engineer, uncover such Work for observation. Such uncovering shall be at Contractor's expense unless Contractor had given Engineer timely notice of Contractor's intention to


Copyright © 2013 National Society of Professional Engineers, American Council of Engineering Companies, and American Society of Civil Engineers. All rights reserved.

cover the same and Engineer had not acted with reasonable promptness in response to such notice.

*14.03 Defective Work*

A. *Contractor's Obligation*: It is Contractor's obligation to assure that the Work is not defective.

B. *Engineer's Authority*: Engineer has the authority to determine whether Work is defective, and to reject defective Work.

C. *Notice of Defects*: Prompt notice of all defective Work of which Owner or Engineer has actual knowledge will be given to Contractor.

D. *Correction, or Removal and Replacement*: Promptly after receipt of written notice of defective Work, Contractor shall correct all such defective Work, whether or not fabricated, installed, or completed, or, if Engineer has rejected the defective Work, remove it from the Project and replace it with Work that is not defective.

E. *Preservation of Warranties*: When correcting defective Work, Contractor shall take no action that would void or otherwise impair Owner's special warranty and guarantee, if any, on said Work.

F. *Costs and Damages*: In addition to its correction, removal, and replacement obligations with respect to defective Work, Contractor shall pay all claims, costs, losses, and damages arising out of or relating to defective Work, including but not limited to the cost of the inspection, testing, correction, removal, replacement, or reconstruction of such defective Work, fines levied against Owner by governmental authorities because the Work is defective, and the costs of repair or replacement of work of others resulting from defective Work. Prior to final payment, if Owner and Contractor are unable to agree as to the measure of such claims, costs, losses, and damages resulting from defective Work, then Owner may impose a reasonable set-off against payments due under Article 15.

*14.04 Acceptance of Defective Work*

A. If, instead of requiring correction or removal and replacement of defective Work, Owner prefers to accept it, Owner may do so (subject, if such acceptance occurs prior to final payment, to Engineer's confirmation that such acceptance is in general accord with the design intent and applicable engineering principles, and will not endanger public safety). Contractor shall pay all claims, costs, losses, and damages attributable to Owner's evaluation of and determination to accept such defective Work (such costs to be approved by Engineer as to reasonableness), and for the diminished value of the Work to the extent not otherwise paid by Contractor. If any such acceptance occurs prior to final payment, the necessary revisions in the Contract Documents with respect to the Work shall be incorporated in a Change Order. If the parties are unable to agree as to the decrease in the Contract Price, reflecting the diminished value of Work so accepted, then Owner may impose a reasonable set-off against payments due under Article 15. If the acceptance of defective Work occurs after final payment, Contractor shall pay an appropriate amount to Owner.

*14.05 Uncovering Work*

A. Engineer has the authority to require additional inspection or testing of the Work, whether or not the Work is fabricated, installed, or completed.


**Copyright © 2013 National Society of Professional Engineers, American Council of Engineering Companies, and American Society of Civil Engineers. All rights reserved.**

B. If any Work is covered contrary to the written request of Engineer, then Contractor shall, if requested by Engineer, uncover such Work for Engineer's observation, and then replace the covering, all at Contractor's expense.

C. If Engineer considers it necessary or advisable that covered Work be observed by Engineer or inspected or tested by others, then Contractor, at Engineer's request, shall uncover, expose, or otherwise make available for observation, inspection, or testing as Engineer may require, that portion of the Work in question, and provide all necessary labor, material, and equipment.

1. If it is found that the uncovered Work is defective, Contractor shall be responsible for all claims, costs, losses, and damages arising out of or relating to such uncovering, exposure, observation, inspection, and testing, and of satisfactory replacement or reconstruction (including but not limited to all costs of repair or replacement of work of others); and pending Contractor's full discharge of this responsibility the Owner shall be entitled to impose a reasonable set-off against payments due under Article 15.

2. If the uncovered Work is not found to be defective, Contractor shall be allowed an increase in the Contract Price or an extension of the Contract Times, or both, directly attributable to such uncovering, exposure, observation, inspection, testing, replacement, and reconstruction. If the parties are unable to agree as to the amount or extent thereof, then Contractor may submit a Change Proposal within 30 days of the determination that the Work is not defective.

*14.06 Owner May Stop the Work*

A. If the Work is defective, or Contractor fails to supply sufficient skilled workers or suitable materials or equipment, or fails to perform the Work in such a way that the completed Work will conform to the Contract Documents, then Owner may order Contractor to stop the Work, or any portion thereof, until the cause for such order has been eliminated; however, this right of Owner to stop the Work shall not give rise to any duty on the part of Owner to exercise this right for the benefit of Contractor, any Subcontractor, any Supplier, any other individual or entity, or any surety for, or employee or agent of any of them.

*14.07 Owner May Correct Defective Work*

A. If Contractor fails within a reasonable time after written notice from Engineer to correct defective Work, or to remove and replace rejected Work as required by Engineer, or if Contractor fails to perform the Work in accordance with the Contract Documents, or if Contractor fails to comply with any other provision of the Contract Documents, then Owner may, after seven days written notice to Contractor, correct or remedy any such deficiency.

B. In exercising the rights and remedies under this Paragraph 14.07, Owner shall proceed expeditiously. In connection with such corrective or remedial action, Owner may exclude Contractor from all or part of the Site, take possession of all or part of the Work and suspend Contractor's services related thereto, and incorporate in the Work all materials and equipment stored at the Site or for which Owner has paid Contractor but which are stored elsewhere. Contractor shall allow Owner, Owner's representatives, agents and employees, Owner's other contractors, and Engineer and Engineer's consultants access to the Site to enable Owner to exercise the rights and remedies under this paragraph.

C. All claims, costs, losses, and damages incurred or sustained by Owner in exercising the rights and remedies under this Paragraph 14.07 will be charged against Contractor as set-offs against payments due under Article 15. Such claims, costs, losses and damages will


**Copyright © 2013 National Society of Professional Engineers, American Council of Engineering Companies, and American Society of Civil Engineers. All rights reserved.**

include but not be limited to all costs of repair, or replacement of work of others destroyed or damaged by correction, removal, or replacement of Contractor's defective Work.

D. Contractor shall not be allowed an extension of the Contract Times because of any delay in the performance of the Work attributable to the exercise by Owner of Owner's rights and remedies under this Paragraph 14.07.

**ARTICLE 15 – PAYMENTS TO CONTRACTOR; SET-OFFS; COMPLETION; CORRECTION PERIOD**

*15.01 Progress Payments*

A. *Basis for Progress Payments*: The Schedule of Values established as provided in Article 2 will serve as the basis for progress payments and will be incorporated into a form of Application for Payment acceptable to Engineer. Progress payments on account of Unit Price Work will be based on the number of units completed during the pay period, as determined under the provisions of Paragraph 13.03. Progress payments for cost-based Work will be based on Cost of the Work completed by Contractor during the pay period.

B. *Applications for Payments*:

1. At least 20 days before the date established in the Agreement for each progress payment (but not more often than once a month), Contractor shall submit to Engineer for review an Application for Payment filled out and signed by Contractor covering the Work completed as of the date of the Application and accompanied by such supporting documentation as is required by the Contract Documents. If payment is requested on the basis of materials and equipment not incorporated in the Work but delivered and suitably stored at the Site or at another location agreed to in writing, the Application for Payment shall also be accompanied by a bill of sale, invoice, or other documentation warranting that Owner has received the materials and equipment free and clear of all Liens, and evidence that the materials and equipment are covered by appropriate property insurance, a warehouse bond, or other arrangements to protect Owner's interest therein, all of which must be satisfactory to Owner.

2. Beginning with the second Application for Payment, each Application shall include an affidavit of Contractor stating that all previous progress payments received on account of the Work have been applied on account to discharge Contractor's legitimate obligations associated with prior Applications for Payment.

3. The amount of retainage with respect to progress payments will be as stipulated in the Agreement.

C. *Review of Applications*:

1. Engineer will, within 10 days after receipt of each Application for Payment, including each resubmittal, either indicate in writing a recommendation of payment and present the Application to Owner, or return the Application to Contractor indicating in writing Engineer's reasons for refusing to recommend payment. In the latter case, Contractor may make the necessary corrections and resubmit the Application.

2. Engineer's recommendation of any payment requested in an Application for Payment will constitute a representation by Engineer to Owner, based on Engineer's observations of the executed Work as an experienced and qualified design professional, and on Engineer's review of the Application for Payment and the accompanying data and schedules, that to the best of Engineer's knowledge, information and belief:


**Copyright © 2013 National Society of Professional Engineers, American Council of Engineering Companies, and American Society of Civil Engineers. All rights reserved.**

a. the Work has progressed to the point indicated;

b. the quality of the Work is generally in accordance with the Contract Documents (subject to an evaluation of the Work as a functioning whole prior to or upon Substantial Completion, the results of any subsequent tests called for in the Contract Documents, a final determination of quantities and classifications for Unit Price Work under Paragraph 13.03, and any other qualifications stated in the recommendation); and

c. the conditions precedent to Contractor's being entitled to such payment appear to have been fulfilled in so far as it is Engineer's responsibility to observe the Work.

3. By recommending any such payment Engineer will not thereby be deemed to have represented that:

a. inspections made to check the quality or the quantity of the Work as it has been performed have been exhaustive, extended to every aspect of the Work in progress, or involved detailed inspections of the Work beyond the responsibilities specifically assigned to Engineer in the Contract; or

b. there may not be other matters or issues between the parties that might entitle Contractor to be paid additionally by Owner or entitle Owner to withhold payment to Contractor.

4. Neither Engineer's review of Contractor's Work for the purposes of recommending payments nor Engineer's recommendation of any payment, including final payment, will impose responsibility on Engineer:

a. to supervise, direct, or control the Work, or

b. for the means, methods, techniques, sequences, or procedures of construction, or the safety precautions and programs incident thereto, or

c. for Contractor's failure to comply with Laws and Regulations applicable to Contractor's performance of the Work, or

d. to make any examination to ascertain how or for what purposes Contractor has used the money paid on account of the Contract Price, or

e. to determine that title to any of the Work, materials, or equipment has passed to Owner free and clear of any Liens.

5. Engineer may refuse to recommend the whole or any part of any payment if, in Engineer's opinion, it would be incorrect to make the representations to Owner stated in Paragraph 15.01.C.2.

6. Engineer will recommend reductions in payment (set-offs) necessary in Engineer's opinion to protect Owner from loss because:

a. the Work is defective, requiring correction or replacement;

b. the Contract Price has been reduced by Change Orders;

c. Owner has been required to correct defective Work in accordance with Paragraph 14.07, or has accepted defective Work pursuant to Paragraph 14.04;

d. Owner has been required to remove or remediate a Hazardous Environmental Condition for which Contractor is responsible; or


**Copyright © 2013 National Society of Professional Engineers, American Council of Engineering Companies, and American Society of Civil Engineers. All rights reserved.**

e. Engineer has actual knowledge of the occurrence of any of the events that would constitute a default by Contractor and therefore justify termination for cause under the Contract Documents.

D. *Payment Becomes Due*:

1. Ten days after presentation of the Application for Payment to Owner with Engineer's recommendation, the amount recommended (subject to any Owner set-offs) will become due, and when due will be paid by Owner to Contractor.

E. *Reductions in Payment by Owner*:

1. In addition to any reductions in payment (set-offs) recommended by Engineer, Owner is entitled to impose a set-off against payment based on any of the following:

a. claims have been made against Owner on account of Contractor's conduct in the performance or furnishing of the Work, or Owner has incurred costs, losses, or damages on account of Contractor's conduct in the performance or furnishing of the Work, including but not limited to claims, costs, losses, or damages from workplace injuries, adjacent property damage, non-compliance with Laws and Regulations, and patent infringement;

b. Contractor has failed to take reasonable and customary measures to avoid damage, delay, disruption, and interference with other work at or adjacent to the Site;

c. Contractor has failed to provide and maintain required bonds or insurance;

d. Owner has been required to remove or remediate a Hazardous Environmental Condition for which Contractor is responsible;

e. Owner has incurred extra charges or engineering costs related to submittal reviews, evaluations of proposed substitutes, tests and inspections, or return visits to manufacturing or assembly facilities;

f. the Work is defective, requiring correction or replacement;

g. Owner has been required to correct defective Work in accordance with Paragraph 14.07, or has accepted defective Work pursuant to Paragraph 14.04;

h. the Contract Price has been reduced by Change Orders;

i. an event that would constitute a default by Contractor and therefore justify a termination for cause has occurred;

j. liquidated damages have accrued as a result of Contractor's failure to achieve Milestones, Substantial Completion, or final completion of the Work;

k. Liens have been filed in connection with the Work, except where Contractor has delivered a specific bond satisfactory to Owner to secure the satisfaction and discharge of such Liens;

l. there are other items entitling Owner to a set off against the amount recommended.

2. If Owner imposes any set-off against payment, whether based on its own knowledge or on the written recommendations of Engineer, Owner will give Contractor immediate written notice (with a copy to Engineer) stating the reasons for such action and the specific amount of the reduction, and promptly pay Contractor any amount


**Copyright © 2013 National Society of Professional Engineers, American Council of Engineering Companies, and American Society of Civil Engineers. All rights reserved.**

remaining after deduction of the amount so withheld. Owner shall promptly pay Contractor the amount so withheld, or any adjustment thereto agreed to by Owner and Contractor, if Contractor remedies the reasons for such action. The reduction imposed shall be binding on Contractor unless it duly submits a Change Proposal contesting the reduction.

3. Upon a subsequent determination that Owner's refusal of payment was not justified, the amount wrongfully withheld shall be treated as an amount due as determined by Paragraph 15.01.C.1 and subject to interest as provided in the Agreement.

*15.02 Contractor's Warranty of Title*

A. Contractor warrants and guarantees that title to all Work, materials, and equipment furnished under the Contract will pass to Owner free and clear of (1) all Liens and other title defects, and (2) all patent, licensing, copyright, or royalty obligations, no later than seven days after the time of payment by Owner.

*15.03 Substantial Completion*

A. When Contractor considers the entire Work ready for its intended use Contractor shall notify Owner and Engineer in writing that the entire Work is substantially complete and request that Engineer issue a certificate of Substantial Completion. Contractor shall at the same time submit to Owner and Engineer an initial draft of punch list items to be completed or corrected before final payment.

B. Promptly after Contractor's notification, Owner, Contractor, and Engineer shall make an inspection of the Work to determine the status of completion. If Engineer does not consider the Work substantially complete, Engineer will notify Contractor in writing giving the reasons therefor.

C. If Engineer considers the Work substantially complete, Engineer will deliver to Owner a preliminary certificate of Substantial Completion which shall fix the date of Substantial Completion. Engineer shall attach to the certificate a punch list of items to be completed or corrected before final payment. Owner shall have seven days after receipt of the preliminary certificate during which to make written objection to Engineer as to any provisions of the certificate or attached punch list. If, after considering the objections to the provisions of the preliminary certificate, Engineer concludes that the Work is not substantially complete, Engineer will, within 14 days after submission of the preliminary certificate to Owner, notify Contractor in writing that the Work is not substantially complete, stating the reasons therefor. If Owner does not object to the provisions of the certificate, or if despite consideration of Owner's objections Engineer concludes that the Work is substantially complete, then Engineer will, within said 14 days, execute and deliver to Owner and Contractor a final certificate of Substantial Completion (with a revised punch list of items to be completed or corrected) reflecting such changes from the preliminary certificate as Engineer believes justified after consideration of any objections from Owner.

D. At the time of receipt of the preliminary certificate of Substantial Completion, Owner and Contractor will confer regarding Owner's use or occupancy of the Work following Substantial Completion, review the builder's risk insurance policy with respect to the end of the builder's risk coverage, and confirm the transition to coverage of the Work under a permanent property insurance policy held by Owner. Unless Owner and Contractor agree otherwise in writing, Owner shall bear responsibility for security, operation, protection of the Work, property insurance, maintenance, heat, and utilities upon Owner's use or occupancy of the Work.


**Copyright © 2013 National Society of Professional Engineers, American Council of Engineering Companies, and American Society of Civil Engineers. All rights reserved.**

E. After Substantial Completion the Contractor shall promptly begin work on the punch list of items to be completed or corrected prior to final payment. In appropriate cases Contractor may submit monthly Applications for Payment for completed punch list items, following the progress payment procedures set forth above.

F. Owner shall have the right to exclude Contractor from the Site after the date of Substantial Completion subject to allowing Contractor reasonable access to remove its property and complete or correct items on the punch list.

*15.04 Partial Use or Occupancy*

A. Prior to Substantial Completion of all the Work, Owner may use or occupy any substantially completed part of the Work which has specifically been identified in the Contract Documents, or which Owner, Engineer, and Contractor agree constitutes a separately functioning and usable part of the Work that can be used by Owner for its intended purpose without significant interference with Contractor's performance of the remainder of the Work, subject to the following conditions:

1. At any time Owner may request in writing that Contractor permit Owner to use or occupy any such part of the Work that Owner believes to be substantially complete. If and when Contractor agrees that such part of the Work is substantially complete, Contractor, Owner, and Engineer will follow the procedures of Paragraph 15.03.A through E for that part of the Work.

2. At any time Contractor may notify Owner and Engineer in writing that Contractor considers any such part of the Work substantially complete and request Engineer to issue a certificate of Substantial Completion for that part of the Work.

3. Within a reasonable time after either such request, Owner, Contractor, and Engineer shall make an inspection of that part of the Work to determine its status of completion. If Engineer does not consider that part of the Work to be substantially complete, Engineer will notify Owner and Contractor in writing giving the reasons therefor. If Engineer considers that part of the Work to be substantially complete, the provisions of Paragraph 15.03 will apply with respect to certification of Substantial Completion of that part of the Work and the division of responsibility in respect thereof and access thereto.

4. No use or occupancy or separate operation of part of the Work may occur prior to compliance with the requirements of Paragraph 6.05 regarding builder's risk or other property insurance.

*15.05 Final Inspection*

A. Upon written notice from Contractor that the entire Work or an agreed portion thereof is complete, Engineer will promptly make a final inspection with Owner and Contractor and will notify Contractor in writing of all particulars in which this inspection reveals that the Work, or agreed portion thereof, is incomplete or defective. Contractor shall immediately take such measures as are necessary to complete such Work or remedy such deficiencies.

*15.06 Final Payment*

A. *Application for Payment*:

1. After Contractor has, in the opinion of Engineer, satisfactorily completed all corrections identified during the final inspection and has delivered, in accordance with the Contract Documents, all maintenance and operating instructions, schedules, guarantees, bonds, certificates or other evidence of insurance, certificates of


**Copyright © 2013 National Society of Professional Engineers, American Council of Engineering Companies, and American Society of Civil Engineers. All rights reserved.**

inspection, annotated record documents (as provided in Paragraph 7.11), and other documents, Contractor may make application for final payment.

2. The final Application for Payment shall be accompanied (except as previously delivered) by:

   a. all documentation called for in the Contract Documents;

   b. consent of the surety, if any, to final payment;

   c. satisfactory evidence that all title issues have been resolved such that title to all Work, materials, and equipment has passed to Owner free and clear of any Liens or other title defects, or will so pass upon final payment.

   d. a list of all disputes that Contractor believes are unsettled; and

   e. complete and legally effective releases or waivers (satisfactory to Owner) of all Lien rights arising out of the Work, and of Liens filed in connection with the Work.

3. In lieu of the releases or waivers of Liens specified in Paragraph 15.06.A.2 and as approved by Owner, Contractor may furnish receipts or releases in full and an affidavit of Contractor that: (a) the releases and receipts include all labor, services, material, and equipment for which a Lien could be filed; and (b) all payrolls, material and equipment bills, and other indebtedness connected with the Work for which Owner might in any way be responsible, or which might in any way result in liens or other burdens on Owner's property, have been paid or otherwise satisfied. If any Subcontractor or Supplier fails to furnish such a release or receipt in full, Contractor may furnish a bond or other collateral satisfactory to Owner to indemnify Owner against any Lien, or Owner at its option may issue joint checks payable to Contractor and specified Subcontractors and Suppliers.

B. *Engineer's Review of Application and Acceptance*:

1. If, on the basis of Engineer's observation of the Work during construction and final inspection, and Engineer's review of the final Application for Payment and accompanying documentation as required by the Contract Documents, Engineer is satisfied that the Work has been completed and Contractor's other obligations under the Contract have been fulfilled, Engineer will, within ten days after receipt of the final Application for Payment, indicate in writing Engineer's recommendation of final payment and present the Application for Payment to Owner for payment. Such recommendation shall account for any set-offs against payment that are necessary in Engineer's opinion to protect Owner from loss for the reasons stated above with respect to progress payments. At the same time Engineer will also give written notice to Owner and Contractor that the Work is acceptable, subject to the provisions of Paragraph 15.07. Otherwise, Engineer will return the Application for Payment to Contractor, indicating in writing the reasons for refusing to recommend final payment, in which case Contractor shall make the necessary corrections and resubmit the Application for Payment.

C. *Completion of Work*: The Work is complete (subject to surviving obligations) when it is ready for final payment as established by the Engineer's written recommendation of final payment.

D. *Payment Becomes Due*: Thirty days after the presentation to Owner of the final Application for Payment and accompanying documentation, the amount recommended by Engineer (less any further sum Owner is entitled to set off against Engineer's recommendation,


**Copyright © 2013 National Society of Professional Engineers, American Council of Engineering Companies, and American Society of Civil Engineers. All rights reserved.**

including but not limited to set-offs for liquidated damages and set-offs allowed under the provisions above with respect to progress payments) will become due and shall be paid by Owner to Contractor.

*15.07 Waiver of Claims*

A. The making of final payment will not constitute a waiver by Owner of claims or rights against Contractor. Owner expressly reserves claims and rights arising from unsettled Liens, from defective Work appearing after final inspection pursuant to Paragraph 15.05, from Contractor's failure to comply with the Contract Documents or the terms of any special guarantees specified therein, from outstanding Claims by Owner, or from Contractor's continuing obligations under the Contract Documents.

B. The acceptance of final payment by Contractor will constitute a waiver by Contractor of all claims and rights against Owner other than those pending matters that have been duly submitted or appealed under the provisions of Article 17.

*15.08 Correction Period*

A. If within one year after the date of Substantial Completion (or such longer period of time as may be prescribed by the terms of any applicable special guarantee required by the Contract Documents, or by any specific provision of the Contract Documents), any Work is found to be defective, or if the repair of any damages to the Site, adjacent areas that Contractor has arranged to use through construction easements or otherwise, and other adjacent areas used by Contractor as permitted by Laws and Regulations, is found to be defective, then Contractor shall promptly, without cost to Owner and in accordance with Owner's written instructions:

1. correct the defective repairs to the Site or such other adjacent areas;
2. correct such defective Work;
3. if the defective Work has been rejected by Owner, remove it from the Project and replace it with Work that is not defective, and
4. satisfactorily correct or repair or remove and replace any damage to other Work, to the work of others, or to other land or areas resulting therefrom.

B. If Contractor does not promptly comply with the terms of Owner's written instructions, or in an emergency where delay would cause serious risk of loss or damage, Owner may have the defective Work corrected or repaired or may have the rejected Work removed and replaced. Contractor shall pay all claims, costs, losses, and damages (including but not limited to all fees and charges of engineers, architects, attorneys, and other professionals and all court or arbitration or other dispute resolution costs) arising out of or relating to such correction or repair or such removal and replacement (including but not limited to all costs of repair or replacement of work of others).

C. In special circumstances where a particular item of equipment is placed in continuous service before Substantial Completion of all the Work, the correction period for that item may start to run from an earlier date if so provided in the Specifications.

D. Where defective Work (and damage to other Work resulting therefrom) has been corrected or removed and replaced under this paragraph, the correction period hereunder with respect to such Work will be extended for an additional period of one year after such correction or removal and replacement has been satisfactorily completed.


**Copyright © 2013 National Society of Professional Engineers, American Council of Engineering Companies, and American Society of Civil Engineers. All rights reserved.**

E. Contractor's obligations under this paragraph are in addition to all other obligations and warranties. The provisions of this paragraph shall not be construed as a substitute for, or a waiver of, the provisions of any applicable statute of limitation or repose.

**ARTICLE 16 – SUSPENSION OF WORK AND TERMINATION**

*16.01 Owner May Suspend Work*

A. At any time and without cause, Owner may suspend the Work or any portion thereof for a period of not more than 90 consecutive days by written notice to Contractor and Engineer. Such notice will fix the date on which Work will be resumed. Contractor shall resume the Work on the date so fixed. Contractor shall be entitled to an adjustment in the Contract Price or an extension of the Contract Times, or both, directly attributable to any such suspension. Any Change Proposal seeking such adjustments shall be submitted no later than 30 days after the date fixed for resumption of Work.

*16.02 Owner May Terminate for Cause*

A. The occurrence of any one or more of the following events will constitute a default by Contractor and justify termination for cause:

1. Contractor's persistent failure to perform the Work in accordance with the Contract Documents (including, but not limited to, failure to supply sufficient skilled workers or suitable materials or equipment or failure to adhere to the Progress Schedule);

2. Failure of Contractor to perform or otherwise to comply with a material term of the Contract Documents;

3. Contractor's disregard of Laws or Regulations of any public body having jurisdiction; or

4. Contractor's repeated disregard of the authority of Owner or Engineer.

B. If one or more of the events identified in Paragraph 16.02.A occurs, then after giving Contractor (and any surety) ten days written notice that Owner is considering a declaration that Contractor is in default and termination of the contract, Owner may proceed to:

1. declare Contractor to be in default, and give Contractor (and any surety) notice that the Contract is terminated; and

2. enforce the rights available to Owner under any applicable performance bond.

C. Subject to the terms and operation of any applicable performance bond, if Owner has terminated the Contract for cause, Owner may exclude Contractor from the Site, take possession of the Work, incorporate in the Work all materials and equipment stored at the Site or for which Owner has paid Contractor but which are stored elsewhere, and complete the Work as Owner may deem expedient.

D. Owner may not proceed with termination of the Contract under Paragraph 16.02.B if Contractor within seven days of receipt of notice of intent to terminate begins to correct its failure to perform and proceeds diligently to cure such failure.

E. If Owner proceeds as provided in Paragraph 16.02.B, Contractor shall not be entitled to receive any further payment until the Work is completed. If the unpaid balance of the Contract Price exceeds the cost to complete the Work, including all related claims, costs, losses, and damages (including but not limited to all fees and charges of engineers, architects, attorneys, and other professionals) sustained by Owner, such excess will be paid to Contractor. If the cost to complete the Work including such related claims, costs, losses,


**Copyright © 2013 National Society of Professional Engineers, American Council of Engineering Companies, and American Society of Civil Engineers. All rights reserved.**

and damages exceeds such unpaid balance, Contractor shall pay the difference to Owner. Such claims, costs, losses, and damages incurred by Owner will be reviewed by Engineer as to their reasonableness and, when so approved by Engineer, incorporated in a Change Order. When exercising any rights or remedies under this paragraph, Owner shall not be required to obtain the lowest price for the Work performed.

F. Where Contractor's services have been so terminated by Owner, the termination will not affect any rights or remedies of Owner against Contractor then existing or which may thereafter accrue, or any rights or remedies of Owner against Contractor or any surety under any payment bond or performance bond. Any retention or payment of money due Contractor by Owner will not release Contractor from liability.

G. If and to the extent that Contractor has provided a performance bond under the provisions of Paragraph 6.01.A, the provisions of that bond shall govern over any inconsistent provisions of Paragraphs 16.02.B and 16.02.D.

*16.03 Owner May Terminate For Convenience*

A. Upon seven days written notice to Contractor and Engineer, Owner may, without cause and without prejudice to any other right or remedy of Owner, terminate the Contract. In such case, Contractor shall be paid for (without duplication of any items):

1. completed and acceptable Work executed in accordance with the Contract Documents prior to the effective date of termination, including fair and reasonable sums for overhead and profit on such Work;

2. expenses sustained prior to the effective date of termination in performing services and furnishing labor, materials, or equipment as required by the Contract Documents in connection with uncompleted Work, plus fair and reasonable sums for overhead and profit on such expenses; and

3. other reasonable expenses directly attributable to termination, including costs incurred to prepare a termination for convenience cost proposal.

B. Contractor shall not be paid on account of loss of anticipated overhead, profits, or revenue, or other economic loss arising out of or resulting from such termination.

*16.04 Contractor May Stop Work or Terminate*

A. If, through no act or fault of Contractor, (1) the Work is suspended for more than 90 consecutive days by Owner or under an order of court or other public authority, or (2) Engineer fails to act on any Application for Payment within 30 days after it is submitted, or (2) Owner fails for 30 days to pay Contractor any sum finally determined to be due, then Contractor may, upon seven days written notice to Owner and Engineer, and provided Owner or Engineer do not remedy such suspension or failure within that time, terminate the contract and recover from Owner payment on the same terms as provided in Paragraph 16.03.

B. In lieu of terminating the Contract and without prejudice to any other right or remedy, if Engineer has failed to act on an Application for Payment within 30 days after it is submitted, or Owner has failed for 30 days to pay Contractor any sum finally determined to be due, Contractor may, seven days after written notice to Owner and Engineer, stop the Work until payment is made of all such amounts due Contractor, including interest thereon. The provisions of this paragraph are not intended to preclude Contractor from submitting a Change Proposal for an adjustment in Contract Price or Contract Times or otherwise for


**Copyright © 2013 National Society of Professional Engineers, American Council of Engineering Companies, and American Society of Civil Engineers. All rights reserved.**

expenses or damage directly attributable to Contractor's stopping the Work as permitted by this paragraph.

**ARTICLE 17 – FINAL RESOLUTION OF DISPUTES**

*17.01 Methods and Procedures*

A. *Disputes Subject to Final Resolution*: The following disputed matters are subject to final resolution under the provisions of this Article:

1. A timely appeal of an approval in part and denial in part of a Claim, or of a denial in full; and

2. Disputes between Owner and Contractor concerning the Work or obligations under the Contract Documents, and arising after final payment has been made.

B. *Final Resolution of Disputes*: For any dispute subject to resolution under this Article, Owner or Contractor may:

1. elect in writing to invoke the dispute resolution process provided for in the Supplementary Conditions; or

2. agree with the other party to submit the dispute to another dispute resolution process; or

3. if no dispute resolution process is provided for in the Supplementary Conditions or mutually agreed to, give written notice to the other party of the intent to submit the dispute to a court of competent jurisdiction.

**ARTICLE 18 – MISCELLANEOUS**

*18.01 Giving Notice*

A. Whenever any provision of the Contract Documents requires the giving of written notice, it will be deemed to have been validly given if:

1. delivered in person, by a commercial courier service or otherwise, to the individual or to a member of the firm or to an officer of the corporation for which it is intended; or

2. delivered at or sent by registered or certified mail, postage prepaid, to the last business address known to the sender of the notice.

*18.02 Computation of Times*

A. When any period of time is referred to in the Contract by days, it will be computed to exclude the first and include the last day of such period. If the last day of any such period falls on a Saturday or Sunday or on a day made a legal holiday by the law of the applicable jurisdiction, such day will be omitted from the computation.

*18.03 Cumulative Remedies*

A. The duties and obligations imposed by these General Conditions and the rights and remedies available hereunder to the parties hereto are in addition to, and are not to be construed in any way as a limitation of, any rights and remedies available to any or all of them which are otherwise imposed or available by Laws or Regulations, by special warranty or guarantee, or by other provisions of the Contract. The provisions of this paragraph will be as effective as if repeated specifically in the Contract Documents in connection with each particular duty, obligation, right, and remedy to which they apply.


**Copyright © 2013 National Society of Professional Engineers, American Council of Engineering Companies, and American Society of Civil Engineers. All rights reserved.**

*18.04 Limitation of Damages*

A. With respect to any and all Change Proposals, Claims, disputes subject to final resolution, and other matters at issue, neither Owner nor Engineer, nor any of their officers, directors, members, partners, employees, agents, consultants, or subcontractors, shall be liable to Contractor for any claims, costs, losses, or damages sustained by Contractor on or in connection with any other project or anticipated project.

*18.05 No Waiver*

A. A party's non-enforcement of any provision shall not constitute a waiver of that provision, nor shall it affect the enforceability of that provision or of the remainder of this Contract.

*18.06 Survival of Obligations*

A. All representations, indemnifications, warranties, and guarantees made in, required by, or given in accordance with the Contract, as well as all continuing obligations indicated in the Contract, will survive final payment, completion, and acceptance of the Work or termination or completion of the Contract or termination of the services of Contractor.

*18.07 Controlling Law*

A. This Contract is to be governed by the law of the state in which the Project is located.

*18.08 Headings*

A. Article and paragraph headings are inserted for convenience only and do not constitute parts of these General Conditions.


**Copyright © 2013 National Society of Professional Engineers, American Council of Engineering Companies, and American Society of Civil Engineers. All rights reserved.**

# SUPPLEMENTARY CONDITIONS

These Supplementary Conditions amend or supplement the Standard General Conditions of the Construction Contract, EJCDC® C-700 (2013 Edition). All provisions that are not so amended or supplemented remain in full force and effect.

The terms used in these Supplementary Conditions have the meanings stated in the General Conditions. Additional terms used in these Supplementary Conditions have the meanings stated below, which are applicable to both the singular and plural thereof.

The address system used in these Supplementary Conditions is the same as the address system used in the General Conditions, with the prefix "SC" added thereto.

## ARTICLE 1 – DEFINITIONS AND TERMINOLOGY

*SC-1.01 Defined Terms*

**SC-1.01. Add to the list of definitions in Paragraph 1.01.A by inserting the following as numbered items in their proper alphabetical positions:**

**SURETY – The person, firm, or corporation which is bound by the contract bonds with and for Contractor (Principal); and which is held and firmly bound unto Owner for the conditions of obligations set forth in said bonds.**

## ARTICLE 2 – PRELIMINARY MATTERS

*SC-2.01 Delivery of Bonds and Evidence of Insurance*

**SC-2.01 Delete Paragraphs 2.01 B. in their entirety and insert the following in their place:**

**B. Evidence of Contractor's Insurance: When Contractor delivers the executed counterparts of the Agreement to Owner, Contractor shall also deliver to Owner copies of the policies of insurance (including all endorsements, and identification of applicable self-insured retentions and deductibles) required to be provided by Contractor in Article 6. Contractor may block out (redact) any confidential premium or pricing information contained in any policy or endorsement furnished under this provision.**

**SC-2.01 Delete Paragraphs 2.01 C. in its entirety.**

*SC-2.03 Before Starting Construction*

**SC-2.03 Amend the second sentence of Paragraph 2.03.A to read as follows:**

**At the Preconstruction Conference (or as otherwise specifically required by the Contract Documents), Contractor shall submit to Engineer for timely review**

**ARTICLE 4 – PRELIMINARY MATTERS**

*SC-4.01 Commencement of Contract Times; Notice to Proceed*

**SC-4.01 Amend the third sentence of Paragraph 4.01 A. to read as follows:**

**A. In no event will the Contract Times commence to run later than the one hundred eightieth day after the day of Bid opening or the ninetieth day after the Effective Date of the Contract, whichever date is earlier.**

**ARTICLE 5 – AVAILABILITY OF LANDS; SUBSURFACE AND PHYSICAL CONDITIONS; HAZARDOUS ENVIRONMENTAL CONDITIONS**

*SC-5.01 Availability of Lands*

**SC-5.01 Add the following to the end of paragraph 5.01.C:**

**Contractor shall obtain said land rights at his own expense and without liability to the Owner. Contractor shall not enter upon private property without first obtaining written permission from the rightful property owner.**

*SC-5.03 Subsurface and Physical Conditions*

**SC 5.03 Delete Paragraphs 5.03.A and 5.03.B in their entirety and insert the following:**

**A. No reports of explorations or tests of subsurface conditions at or adjacent to the Site, or drawings of physical conditions relating to existing surface or subsurface structures at the Site, are known to Owner.**

*SC-5.06 Hazardous Environmental Conditions*

**SC 5.06 Delete Paragraphs 5.06.A and 5.06.B in their entirety and insert the following:**

**A. No reports or drawings related to Hazardous Environmental Conditions at the Site are known to Owner.**

**B. Not Used.**

**SC-5.06 Delete Paragraph 5.06 I. in its entirety.**

**SC 5.06 Amend the first paragraph of 5.06.J of the General Conditions by changing "(including but not limited to all fees and charges of engineers, architects, attorneys, and other professionals and all court or arbitration or other dispute resolution costs)" to "(including but not limited to all fees and charges of engineers, architects, attorneys, and other professionals and all court or other dispute resolution costs)"**

**ARTICLE 6 – BONDS AND INSURANCE**

*SC-6.01 Performance, Payment, and Other Bonds*

**SC 6.01 Delete Paragraph 6.01.B in its entirety and insert the following:**

**B. All Bonds shall be in the form prescribed by the Contract Documents or other form approved by Owner. All else notwithstanding, the terms of all Bonds shall be substantially in the form prescribed by Chapter 255, Florida Statutes. All Bonds shall be executed by Contractor and a corporate bonding company licensed to transact such business in the State of Florida and named on the**

**current list of "Surety Companies Acceptable on Federal Bonds" as published in the Treasury Department Circular Number 570. Contractor will cause the Bonds to be recorded with the Clerk of the Circuit Court in the county in which the Work is to be performed. Failure to execute bonds in the form prescribed may constitute nonresponsiveness on the part of Contractor. The expense for all Bonds shall be Contractor's responsibility.**

*SC-6.02 Insurance—General Provisions*

**SC-6.02 Add the following paragraph immediately after Paragraph 6.02.B:**

**1. Certificates of insurance shall be issued by a company with a Best's rating of at least B+ authorized to do business in the State of Florida. Owner must approve non-rated insurers. If used, Owner shall be shown as the Certificate Holder, Engineer as Additional Insured and provide for a 30-day cancellation notice.**

**SC-6.02 Delete Paragraph 6.02 D. in its entirety.**

**SC-6.02 Add the following paragraph immediately after Paragraph 6.02.J:**

**K. No work shall be commenced under this contract until the required Certificate(s) have been provided. Work shall not continue after expiration (or cancellation) until new Certificate(s) have been provided. Non-continuance of work after expiration (or cancellation) of Certificate(s) will not constitute a delay beyond Contractor's control as defined in paragraph 4.05.**

**L. Contractor shall arrange for its insurers' policies to include, or be endorsed to include, a severability of interest/cross liability provision, so that Owner will be treated as if a separate policy were in existence, but without increasing the policy limits.**

**M. Contractor's deductibles/self-insured retentions shall be disclosed to Owner and may be disapproved by the latter. They shall be reduced or eliminated at the option of Owner. Contractor is responsible for the amount of any deductible or self-insured retention.**

**N. Insurance required of Contractor or any other insurance of Contractor shall be considered primary and insurance or self-insurance of Owner shall be considered excess, as may be applicable to claims that arise out of this contract.**

**O. The Contractor shall either (a) require each subcontractor to procure and maintain the same coverage as required of the Contractor, or (b) insure the activities of subcontractors in his own policy.**

**SC-6.05.A. Add the following to the list of items in Paragraph 6.05.A, as numbered items:**

**14. include for the benefit of Owner loss of profits and soft cost coverage including, without limitation, fixed expenses and debt service for a minimum of 12 months with a maximum deductible of 30 days, plus attorneys fees and engineering or other consultants' fees, if not otherwise covered;**

**15. include by express endorsement coverage of damage to Contractor's equipment.**

**ARTICLE 7 – CONTRACTOR'S RESPONSIBILITIES**

*SC-7.02 Labor; Working Hours*

**SC-7.02.B. Amend the first and second sentences of Paragraph 7.02.B to state "…all Work at the Site shall be performed during regular working hours, 7:00 AM through 5:00 PM. Contractor will not perform Work on a Saturday, Sunday, or any legal holiday recognized by the Owner without prior written approval by the Owner. The Owner recognizes the following legal holidays:**

**New Year's Day (January 1)**
**Martin Luther King Jr. Day (3rd Monday in January)**
**President's Day (3rd Monday in February)**
**Good Friday**
**Memorial Day (Last Monday of May)**
**Independence Day (July 4)**
**Labor Day (1st Monday of September)**
**Veteran's Day (November 11)**
**Thanksgiving Day (4th Thursday of November)**
**Day After Thanksgiving (4th Friday of November)**
**Christmas Eve (December 24)**
**Christmas Day (December 25)**
**New Year's Eve (December 31)"**

**SC-7.02.C. Add the following new paragraph immediately after Paragraph 7.02.B:**

**Contractor shall be responsible for the cost of any overtime pay or other expense incurred by the Owner for Engineer's services (including those of the Resident Project Representative, if any), Owner's representative, and construction observation services, occasioned by the performance of Work outside of regular working hours as defined in the Contract Documents. If Contractor is responsible but does not pay, or if the parties are unable to agree as to the amount owed, then Owner may impose a reasonable set-off against payments due under Article 15.**

**SC-7.07 Delete Paragraph 7.07 B. in its entirety.**

*SC-7.11 Record Documents*

**SC-7.11.A. Add the following new paragraph immediately after Paragraph 7.11.A:**

**Annotation of record documents shall be legible, precise, and complete as determined by Engineer. Record drawings shall also meet all additional requirements if any as specified in the Contract Documents including providing an electronic CAD version.**

*SC-7.12 Safety and Protection*

**SC-7.12.A. Add the following new paragraph immediately after Paragraph 7.12.A.3:**

**4. Contractor shall be responsible at all times for precautions to achieve the protection of all persons, including employees and property. Contractor shall make special effort to detect hazardous conditions and shall take prompt action where necessary to avoid accident, injury, or property damage. OSHA and all other applicable safety laws and ordinances shall be followed as well as American National Standards Institute Safety Standards. All accidents, injuries,**

**claims, or potential claims shall be reported promptly to Owner.**

*SC-7.16 Shop Drawings, Samples, and Other Submittals*

**SC-7.16.E. Add the following new paragraph immediately after Paragraph 7.16.E.1:**

**2. Contractor shall reimburse Owner for the charges of Engineer and Engineer's Consultants for costs generated as a result of more than two submittals of any one Shop Drawing or Sample being required for evaluation due to rejection for noncompliance of the original submittal or for lack of information required by the Contract Documents. Owner's reimbursement for the charges shall be a deduction from Contractor's Partial Payment(s).**

*SC-7.18 Indemnification*

**SC-7.18 Delete in its entirety**

**ARTICLE 9 – OWNER'S RESPONSIBILITIES**

*SC-9.02 Replacement of Engineer*

**SC-9.02 Amend paragraph 9.02 of the General Conditions by striking out the following words: ",provided the Contractor makes no reasonable objection."**

*SC-9.11 Evidence of Financial Arrangements*

**SC-9.11 Delete in its entirety**

**ARTICLE 10 – ENGINEER'S STATUS DURING CONSTRUCTION**

*SC-10.03 Project Representative*

**SC-10.03 Add the following new paragraphs immediately after Paragraph 10.03.A:**

**B. The Resident Project Representative (RPR) will be Engineer's representative at the Site, will act as directed by and under the supervision of Engineer, and will confer with Engineer regarding RPR's actions.**

**1. General: RPR's dealings in matters pertaining to the Work in general shall be with Engineer and Contractor. RPR's dealings with Subcontractors shall only be through or with the full knowledge and approval of Contractor. RPR shall generally communicate with Owner only with the knowledge of and under the direction of Engineer.**

**2. Schedules: Review the progress schedule, schedule of Shop Drawing and Sample submittals, and Schedule of Values prepared by Contractor and consult with Engineer concerning acceptability.**

**3. Conferences and Meetings: Attend meetings with Contractor, such as preconstruction conferences, progress meetings, job conferences, and other Project-related meetings, and prepare and circulate copies of minutes thereof.**

4. **Liaison:**

    a. **Serve as Engineer's liaison with Contractor. Working principally through Contractor's authorized representative or designee, assist in providing information regarding the provisions and intent of the Contract Documents.**

    b. **Assist Engineer in serving as Owner's liaison with Contractor when Contractor's operations affect Owner's on-Site operations.**

    c. **Assist in obtaining from Owner additional details or information, when required for proper execution of the Work.**

5. **Interpretation of Contract Documents: Report to Engineer when clarifications and interpretations of the Contract Documents are needed and transmit to Contractor clarifications and interpretations as issued by Engineer.**

6. **Shop Drawings and Samples:**

    a. **Record date of receipt of Samples and Contractor-approved Shop Drawings.**

    b. **Receive Samples which are furnished at the Site by Contractor, and notify Engineer of availability of Samples for examination.**

    c. **Advise Engineer and Contractor of the commencement of any portion of the Work requiring a Shop Drawing or Sample submittal for which RPR believes that the submittal has not been approved by Engineer.**

7. **Modifications: Consider and evaluate Contractor's suggestions for modifications in Drawings or Specifications and report such suggestions, together with RPR's recommendations, if any, to Engineer. Transmit to Contractor in writing decisions as issued by Engineer.**

8. **Review of Work and Rejection of Defective Work:**

    a. **Conduct on-Site observations of Contractor's work in progress to assist Engineer in determining if the Work is in general proceeding in accordance with the Contract Documents.**

    b. **Report to Engineer whenever RPR believes that any part of Contractor's work in progress is defective, will not produce a completed Project that conforms generally to the Contract Documents, or will imperil the integrity of the design concept of the completed Project as a functioning whole as indicated in the Contract Documents, or has been damaged, or does not meet the requirements of any inspection, test or approval required to be made; and advise Engineer of that part of work in progress that RPR believes should be corrected or rejected or should be uncovered for observation, or requires special testing, inspection or approval.**

9. **Inspections, Tests, and System Start-ups:**

    a. **Verify that tests, equipment, and systems start-ups and operating and maintenance training are conducted in the presence of appropriate Owner's personnel, and that Contractor maintains adequate records thereof.**

b. **Observe, record, and report to Engineer appropriate details relative to the test procedures and systems start-ups.**

10. **Records:**

    a. **Prepare a daily report or keep a diary or log book, recording Contractor's hours on the Site, Subcontractors present at the Site, weather conditions, data relative to questions of Change Orders, Field Orders, Work Change Directives, or changed conditions, Site visitors, deliveries of equipment or materials, daily activities, decisions, observations in general, and specific observations in more detail as in the case of observing test procedures; and send copies to Engineer.**

    b. **Record names, addresses, fax numbers, e-mail addresses, web site locations, and telephone numbers of all Contractors, Subcontractors, and major Suppliers of materials and equipment.**

    c. **Maintain records for use in preparing Project documentation.**

11. **Reports:**

    a. **Furnish to Engineer periodic reports as required of progress of the Work and of Contractor's compliance with the Progress Schedule and schedule of Shop Drawing and Sample submittals.**

    b. **Draft and recommend to Engineer proposed Change Orders, Work Change Directives, and Field Orders. Obtain backup material from Contractor.**

    c. **Immediately notify Engineer of the occurrence of any Site accidents, emergencies, acts of God endangering the Work, force majeure or delay events, damage to property by fire or other causes, or the discovery of any Constituent of Concern or Hazardous Environmental Condition.**

12. **Payment Requests: Review applications for payment with Contractor for compliance with the established procedure for their submission and forward with recommendations to Engineer, noting particularly the relationship of the payment requested to the Schedule of Values, Work completed, and materials and equipment delivered at the Site but not incorporated in the Work.**

13. **Certificates, Operation and Maintenance Manuals: During the course of the Work, verify that materials and equipment certificates, operation and maintenance manuals and other data required by the Contract Documents to be assembled and furnished by Contractor are applicable to the items actually installed and in accordance with the Contract Documents, and have these documents delivered to Engineer for review and forwarding to Owner prior to payment for that part of the Work.**

14. **Completion:**

    a. **Participate in Engineer's visits to the Site to determine Substantial Completion, assist in the determination of Substantial Completion and the preparation of a punch list of items to be completed or corrected.**

    b. **Participate in Engineer's final visit to the Site to determine completion of the Work, in the company of Owner and Contractor, and prepare a**

**final punch list of items to be completed and deficiencies to be remedied.**

**c. Observe whether all items on the final list have been completed or corrected and make recommendations to Engineer concerning acceptance and issuance of the notice of acceptability of the work.**

**C. The RPR shall not:**

**1. Authorize any deviation from the Contract Documents or substitution of materials or equipment (including "or-equal" items).**

**2. Exceed limitations of Engineer's authority as set forth in the Contract Documents.**

**3. Undertake any of the responsibilities of Contractor, Subcontractors, or Suppliers.**

**4. Advise on, issue directions relative to, or assume control over any aspect of the means, methods, techniques, sequences or procedures of Contractor's work.**

**5. Advise on, issue directions regarding, or assume control over security or safety practices, precautions, and programs in connection with the activities or operations of Owner or Contractor.**

**6. Participate in specialized field or laboratory tests or inspections conducted off-site by others except as specifically authorized by Engineer.**

**7. Accept Shop Drawing or Sample submittals from anyone other than Contractor.**

**8. Authorize Owner to occupy the Project in whole or in part.**

**ARTICLE 12 – CLAIMS**

*SC-12.01 Claims*

**SC 12.01.B** **Amend the first sentence of paragraph 12.01.B of the General Conditions by changing "(but in no event later than 30 days)" to "(but in no event later than 90 days for the Owner and no later than 10 days for the Contractor)".**

**ARTICLE 13 – COST OF THE WORK; ALLOWANCES; UNIT PRICE WORK**

*SC-13.01 Cost of the Work*

**SC 13.01.B.5.c** **Add the following to the end of Paragraph 13.01.B.5.c:**

**In no case shall rates exceed those published by the current edition of Data Quest Incorporated titled, Rental Rate Blue Book for Construction Equipment, and other procedures established by Florida Department of Transportation.**

**SC 13.01.B.5.f** **Amend the first sentence of paragraph 13.01.B.5.f by striking out the following words: "(except losses and damages within the deductible amounts of property insurance established in accordance with Paragraph 6.05)."**

**SC 13.01.B.5.i** **Add the following new paragraphs immediately after paragraph 13.01.B.5.i:**

**j. The cost of compliance with current local, state and federal safety regulations.**

*SC-13.03 Unit Price Work*

**SC 13.03.E** **Delete Paragraph 13.03.E in its entirety and insert the following in its place:**

**E. The unit price of an item of Unit Price Work shall be subject to reevaluation and adjustment by the Owner under the following conditions:**

**1. if the extended price of a particular item of Unit Price Work amounts to 25 percent or more of the Contract Price (based on estimated quantities at the time of Contract formation) and the variation in the quantity of that particular item of Unit Price Work actually furnished or performed by Contractor differs by more than 25 percent from the estimated quantity of such item indicated in the Agreement; and**

**2. if there is no corresponding adjustment with respect to any other item of Work; and**

**3. if Owner believes that the quantity variation entitles Owner to an adjustment in the unit price, Owner may make a Claim, seeking an adjustment in the Contract Price.**

**SC 13.03.E** **Add the following new paragraphs immediately after Paragraph 13.03.E:**

**F. Owner reserves the right to delete any Unit Price Work with the change, if any, in the Contract Price or in the Contract Times determined in accordance with Article 11.**

**ARTICLE 14 –TESTS AND INSPECTIONS; CORRECTION, REMOVAL OR ACCEPTANCE OF DEFECTIVE WORK**

*SC-14.02 Tests, Inspections, and Approvals*

**SC 14.02.A Add the following to the end of Paragraph 14.02.A:**

**Contractor shall reimburse Owner for the charges of Engineer and Engineer's Consultants for all costs due to work not being ready for tests and/or inspections when the Contractor has notified Engineer that work is ready for tests and/or inspections. Contractor shall reimburse Owner for all failed tests and subsequent retests. Partial payments payable to Contractor shall be distributed, first to reimburse the Owner for such charges, with the balance distributed to the Contractor in accordance with the Contract Documents.**

**ARTICLE 15 – PAYMENTS TO CONTRACTOR; SET-OFFS; COMPLETION; CORRECTION PERIOD**

*SC-15.01 Progress Payments*

**SC 15.01.B.2 Delete Paragraph 15.01.B.2 in its entirety and insert the following in its place:**

**Beginning with the second Application for Payment, each Application shall include an affidavit of Contractor certifying that Contractor has disbursed to all subcontractors and suppliers having an interest in the contract their pro rata shares of the payment out of previous progress payments received by Contractor for all work completed and materials furnished in the previous period, less a retainage withheld by Contractor pursuant to an agreement with a subcontractor. Contractor shall provide a waiver of lien for all stored materials with the second application for payment after submitting application for payment. If the waiver of lien is not provided, current application for payment will be reduced by the value of the stored materials until said time waiver of lien is received or stored materials become incorporated in the Work. Within 30 days of receipt for the final progress payment or any other payments received thereafter except the final payment, Contractor shall pay all subcontractors and suppliers having an interest in the contract their pro rata shares of the payment for all work completed and materials furnished.**

**SC 15.01.D.1 Change Paragraph 15.01.D.1 to read as follows:**

**After presentation of the Application for Payment to the Owner with Engineer's recommendation, the amount recommended will (subject to the provisions of paragraph 15.01.C) become due and when due, will be paid by Owner to Contractor within thirty (30) days.**

*SC-15.03 Substantial Completion*

**SC 15.03.B Add the following new subparagraph to Paragraph 15.03.B:**

**1. If some or all of the Work has been determined not to be at a point of Substantial Completion and will require re-inspection or re-testing by Engineer, the cost of such re-inspection or re-testing, including the cost of time, travel and living expenses, shall be paid by Contractor to Owner. If Contractor does not pay, or the parties are unable to agree as to the amount owed, then Owner may impose a reasonable set-off against payments due under Article 15.**

**Work Change Directive No.**

Date of Issuance: Effective Date:

Owner: Village of Palm Springs Owner's Task Order No.:

Contractor: Contractor's Project No.:

Engineer: Holtz Consulting Engineers, Inc. Engineer's Project No.:

Project: Emergency Generator Improvements Contract Name:

Contractor is directed to proceed promptly with the following change(s):

Description:

Attachments: *[List documents supporting change]*

**Purpose for Work Change Directive:**

Directive to proceed promptly with the Work described herein, prior to agreeing to changes on Contract Price and Contract Time, is issued due to: *[check one or both of the following]*

☐ Non-agreement on pricing of proposed change.

☐ Necessity to proceed for schedule or other Project reasons.

**Estimated Change in Contract Price and Contract Times (non-binding, preliminary):**

Contract Price $ [increase] [decrease].

Contract Time days [increase] [decrease].

**Basis of estimated change in Contract Price:**

☐ Lump Sum ☐ Unit Price

☐ Cost of the Work ☐ Other

| RECOMMENDED: | AUTHORIZED BY: | RECEIVED: |
|---|---|---|
| By: | By: | By: |
| Engineer (Authorized Signature) | Owner (Authorized Signature) | Contractor (Authorized Signature) |
| Title: | Title: | Title: |
| Date: | Date: | Date: |

Approved by Funding Agency (if applicable)

By: Date:

Title:

**Change Order No.** _____

Date of Issuance: Effective Date:

Owner: Owner's Task Order No.:

Contractor: Contractor's Project No.:

Engineer: Engineer's Project No.:

Project: Contract Name:

The Contract is modified as follows upon execution of this Change Order:

Description:

Attachments: *[List documents supporting change]*

| **CHANGE IN CONTRACT PRICE** | **CHANGE IN CONTRACT TIMES** *[note changes in Milestones if applicable]* |
|---|---|
| Original Contract Price:<br>$_____ | Original Contract Times:<br>Substantial Completion: _____<br>Ready for Final Payment: _____<br>days or dates |
| [Increase] [Decrease] from previously approved Change Orders No. ___ to No. ___:<br>$_____ | [Increase] [Decrease] from previously approved Change Orders No. ___ to No. ___:<br>Substantial Completion: _____<br>Ready for Final Payment: _____<br>days |
| Contract Price prior to this Change Order:<br>$_____ | Contract Times prior to this Change Order:<br>Substantial Completion: _____<br>Ready for Final Payment: _____<br>days or dates |
| [Increase] [Decrease] of this Change Order:<br>$_____ | [Increase] [Decrease] of this Change Order:<br>Substantial Completion: _____<br>Ready for Final Payment: _____<br>days or dates |
| Contract Price incorporating this Change Order:<br>$_____ | Contract Times with all approved Change Orders:<br>Substantial Completion: _____<br>Ready for Final Payment: _____<br>days or dates |

| RECOMMENDED: | ACCEPTED: | ACCEPTED: |
|---|---|---|
| By: _____ | By: _____ | By: _____ |
| Engineer (if required) | Owner (Authorized Signature) | Contractor (Authorized Signature) |
| Title: _____ | Title _____ | Title _____ |
| Date: _____ | Date _____ | Date _____ |

Approved by Funding Agency (if applicable)

By: _____ Date:

Title: _____

**Field Order No.** _____

| | | | |
|---|---|---|---|
| Date of Issuance: | | Effective Date: | |
| Owner: | Village of Palm Springs | Owner's Task Order No.: | |
| Contractor: | | Contractor's Project No.: | |
| Engineer: | Holtz Consulting Engineers, Inc. | Engineer's Project No.: | |
| Project: | Emergency Generator Improvements | Contract Name: | |

Contractor is hereby directed to promptly execute this Field Order, issued in accordance with General Conditions Paragraph 11.01, for minor changes in the Work without changes in Contract Price or Contract Times. If Contractor considers that a change in Contract Price or Contract Times is required, submit a Change Proposal before proceeding with this Work.

Reference: _____ Specification(s) _____ Drawing(s) / Detail(s)

Description:

Attachments:

| ISSUED: | RECEIVED: |
|---|---|
| By: _____ | By: _____ |
| Engineer (Authorized Signature) | Contractor (Authorized Signature) |
| Title: _____ | Title: _____ |
| Date: _____ | Date: _____ |

Copy to: Owner

# DIVISION 1

# GENERAL REQUIREMENTS

# SECTION 01000

# SUMMARY OF WORK

## PART 1 - GENERAL

### 1.01 WORK COVERED BY CONTRACT DOCUMENTS

A. Furnish all labor, equipment and materials necessary to construct/install emergency generators at existing Lift Station No. 9, Well No. 11, and Well No. 15, including automatic transfer switch, conduits, conductors, restoration items, and everything included for a complete and operable system.

B. The CONTRACTOR shall be responsible for all labor, materials, tools, transportation, supplies, equipment and appurtenances necessary to construct/install, start-up, and test the emergency generators and associated electrical and instrumentation equipment.

C. The OWNER reserves the right to add to the work in accordance with the Contract Documents.

### 1.02 WORK BY OTHERS

A. The CONTRACTOR will diligently perform the scope of work independently of all others who may perform concurrent tasks during execution of the scope of work.

B. The OWNER reserves the right to add to the work in accordance with the Contract Documents.

C. The ENGINEER or OWNER's representative reserves the right to, throughout the construction process, perform on-site inspections of the CONTRACTOR and construction process. Documentation of work shall include, but not be limited to, detailed documentation of daily work performed by the CONTRACTOR, and photographs and/or videos of critical phases of well construction, development, and testing.

D. The CONTRACTOR shall comply and adhere to all security requirements including but not limited to background checks and issuance of security badges. Access to the well site and work areas shall be limited to the areas shown on the project drawings and as discussed in the pre-construction meeting(s).

E. Perimeter privacy (screened) fencing must be secured at all times including but not limited to the installation of temporary construction fencing prior to the removal of existing perimeter and security fencing required for construction. CONTRACTOR must submit a plan outlining the installation and removal of fencing for approval by OWNER prior to mobilization.

**END OF SECTION**

*This page intentionally left blank.*

# SECTION 01025

# MEASUREMENT AND PAYMENT

## PART 1 - GENERAL

### 1.01 GENERAL REQUIREMENTS

A. The Unit prices stated in the Contract shall be considered payment in full for the completion of all work. Payment shall be made under each item only for work as it is not specifically included under other items.

B. The CONTRACTOR shall furnish all labor, equipment and materials necessary to construct all work depicted and required for a complete and operable system for the Village of Palm Springs (OWNER).

### 1.02 PERFORMANCE

A. Section generally defines unless otherwise indicated, the following:

1. Payment item descriptions.

2. Payment application descriptions.

B. The cost of temporary facilities, bonds, insurance, attending project meetings, administration, record drawings, policing, and other general duties shall be considered incidental to all items.

C. The OWNER may direct the CONTRACTOR to install certain portions of the work in advance of other portions without extra payment to the CONTRACTOR.

D. Measurement methods delineated in the individual Specification sections are intended to complement the criteria of this Section. In the event of conflict, the requirements of the individual Specification section will govern.

E. The CONTRACTOR's attention is called to the fact that the quotations for the various items of Work are intended to establish a total price for completing the Work in its entirety. Should the CONTRACTOR feel that the cost of any item of Work has not been established by the Schedule of Values or Measure and Payment, CONTRACTOR shall include the cost for that Work in the other Bid Items so that CONTRACTOR's proposal for the project does reflect CONTRACTOR's total price for completing the Work in its entirety.

### 1.03 RELATED SECTIONS

A. Section 00200 - Instructions to Bidders

B. Section 00520 - Agreement

C. Section 00700 - General Conditions

D. Section 00800 – Supplementary Conditions

## 1.04 LUMP SUM ITEMS

A. The lump sum price shall be full compensation for all labor, materials and equipment to satisfactorily complete the installation of the items as shown on the plans and indicated in the details for lump sum bid items.

## 1.05 UNIT PRICE ITEMS

A. The ENGINEER or his representative shall determine the number of units of each work item installed.

## 1.06 SATISFACTORY COMPLETION

A. Satisfactory completion shall include all installation, testing, and startup of improvements along with full restoration of areas affected by construction.

## 1.07 PAYMENT ITEMS

A. Unit Price Bid

1. Payment shall constitute summation of measured quantities multiplied by the respective unit price for items constructed as specified herein and shown on the engineering drawings; including installation and removal of all temporary facilities, piping; and supply of all incidental materials, equipment and labor necessary to complete the contemplated Work whether specifically identified herein or not.

2. Partial progress payments will be made at monthly intervals and will be based upon the value of the Work completed on the date that a partial payment application is submitted less deductions for retainage as defined elsewhere.

B. Total Lump Sum Bid

1. Full payment shall constitute full reimbursement for the construction of all work as specified herein and shown on the Engineering Drawings; installation and removal of all temporary facilities and supply of all incidental materials, equipment and labor necessary to complete the work whether specifically identified herein or not.

2. Partial progress payments will be made at monthly intervals and be based upon the value of the Work completed on the date that a partial payment application is submitted less deductions for retainage as defined elsewhere.

## 1.08 PAYMENT APPLICATION DESCRIPTION

A. Preparation of Applications:

1. Present required information in type written form, or equivalent.

2. Execute certification by signature of authorized officer.

3. Use data from approved Schedule of Values. Provide dollar value in each column for each line item for portion of work performed.

4. List each authorized Change Order as an extension on the Application for Payment, listing Change Order number and dollar amount as for an original item of Work.

B. Submittal Procedures

1. Submit three copies of each Application for Payment.

   Payment Period: Submit monthly as directed by the OWNER.

   Submit signed and sealed record drawings covering work for which payment is being requested.

   Submit revised progress schedule accurately reflecting the work completed and the schedule of future work items.

C. Substantiating Data

1. When OWNER requires substantiating information, submit data justifying dollar amounts in question.

## PART 2 – PRODUCTS

NOT USED

## PART 3 – EXECUTION

## 3.01 PAYMENT ITEMS

### A. PAY ITEM NO. 1 – GENERAL CONDITIONS, BONDS, AND INDEMNIFICATION

Payment of this item shall be on a lump sum basis. This pay item shall include the costs to comply with all elements of the General Conditions of the Contract, including but not limited to: compliance with the requirements of the General

Conditions, Supplementary Conditions, bonds, insurance, record keeping, temporary facilities, safety and permitting, and indemnification. Payment shall be made at the Contract Lump Sum Price as identified in the Agreement upon completion of work identified in the general conditions. Total cost of this item shall not exceed 5% of the total bid cost.

**B. PAY ITEM NO. 2 – LIFT STATION NO. 9 IMPROVEMENTS**

Payment of this item shall be on a lump sum basis. This pay item shall include the costs for all work required to complete the proposed improvements shown and implied in the Contract Documents including, but not limited to: mobilization/demobilization, demolition of existing facilities, furnishing all labor, materials, and equipment to install the emergency generator, automatic transfer switch, conduits and conductors, concrete pads, startup and testing services, and all appurtenances required for a complete and operable system at Lift Station No. 9. This pay item also includes record drawings and closeout documents as well as all materials, labor and equipment for complete restoration of the area to existing conditions or better.

**C. PAY ITEM NO. 3 – WELL NO. 11 IMPROVEMENTS**

Payment of this item shall be on a lump sum basis. This pay item shall include the costs for all work required to complete the proposed improvements shown and implied in the Contract Documents including, but not limited to: mobilization/demobilization, demolition of existing facilities, furnishing all labor, materials, and equipment to install the emergency generator, automatic transfer switch, conduits and conductors, concrete pads, startup and testing services, and all appurtenances required for a complete and operable system at Well No. 11. This pay item also includes record drawings and closeout documents as well as all materials, labor and equipment for complete restoration of the area to existing conditions or better.

**D. PAY ITEM NO. 4 – WELL NO. 15 IMPROVEMENTS**

Payment of this item shall be on a lump sum basis. This pay item shall include the costs for all work required to complete the proposed improvements shown and implied in the Contract Documents including, but not limited to: mobilization/demobilization, demolition of existing facilities, furnishing all labor, materials, and equipment to install the emergency generator, automatic transfer switch, conduits and conductors, concrete pads, startup and testing services, and all appurtenances required for a complete and operable system at Well No. 15. This pay item also includes record drawings and closeout documents as well as all materials, labor and equipment for complete restoration of the area to existing conditions or better.

**END OF SECTION**

# SECTION 01039

# COORDINATION AND MEETINGS

## PART 1 - GENERAL

### 1.01 PERFORMANCE

A. Section generally defines CONTRACTOR's responsibilities, unless otherwise indicated, for the following:

1. Coordination.
2. Field Engineering.
3. Preconstruction Conference.
4. Progress Meetings.

### 1.02 COORDINATION

A. Coordinate scheduling, submittals, and work to assure efficient and orderly sequence of installation of interdependent construction elements, with provisions for accommodating items to be installed later.

B. Coordinate completion and clean-up of Work of separate sections in preparation for Substantial Completion.

C. Coordinate any tie-ins to existing piping with the Village of Palm Springs (OWNER). Obtain written authorization prior to shutting down any water mains on services, reclaimed mains, force mains, or performing tie-ins.

D. Procure approval from the OWNER prior to operating any existing valve.

### 1.03 FIELD ENGINEERING

A. Employ a Land Surveyor registered in the State of Florida and acceptable to the ENGINEER and the Village to perform all field surveys.

B. CONTRACTOR shall locate and protect survey control and reference points.

C. Control datum for survey is Vertical Control NGVD 1929.

D. Provide field engineering services. Utilize land surveyor to establish elevations, lines, and levels, utilizing recognized survey practices.

E. Submit signed and sealed certification prepared by the Land Surveyor that the elevations and locations of the Work are in conformance with the Contract Documents.

## 1.04 PRECONSTRUCTION CONFERENCE

A. ENGINEER will schedule a conference after Notice of Award.

B. Attendance Required: OWNER, ENGINEER, and CONTRACTOR.

C. Agenda:

1. Designation of personnel representing the parties in Contract, and the ENGINEER.

2. Procedures and processing of field decisions, submittals, substitutions, applications for payments, proposal request, Change Orders and Contract closeout procedures.

3. Scheduling.

## 1.05 PROGRESS MEETINGS

A. Schedule and administer meetings throughout progress of the Work as required.

B. Make arrangements for meetings, prepare agenda with copies for participants, preside at meetings, record minutes, and distribute copies within two (2) days to ENGINEER, OWNER, participants, and those affected by decisions made at the meeting.

C. Attendance Required: Job superintendent, major Subcontractors and suppliers, OWNER, ENGINEER, as appropriate to agenda topics for each meeting.

D. Agenda:

1. Review minutes of previous meetings.

2. Review of work progress.

3. Field observations, problems, and decisions.

3. Identification of problems, which impede planned progress.

## PART 2 – PRODUCTS

NOT USED

## PART 3 – EXECUTION

NOT USED

**END OF SECTION**

# SECTION 01300

# SUBMITTALS

## PART 1 - GENERAL

### 1.01 PERFORMANCE

A. Section generally defines CONTRACTOR’s responsibilities, unless otherwise indicated, for the following:

1. Submittal Procedures.
2. Construction Progress Schedules.
3. Contractor’s Daily Field Notes
4. Temporary Fencing and Screening Plan.
5. Dewatering Plans.
6. Testing Plans.
7. Temporary Trenching, Sheeting, and Shoring Plan.
8. Proposed Products List.
9. Shop Drawings.
10. Product Data.
11. Manufacturers' Instructions.
12. Manufacturers' Certificates.
13. Maintenance of Traffic.

### 1.02 RELATED SECTIONS

A. **Section 01400 - Quality Control:** Manufacturers' field services and reports.

B. **Section 01780 - Contract Closeout:** Contract warranty and manufacturer's certificates, closeout submittals.

### 1.03 SUBMITTAL PROCEDURES

A. Transmit each submittal with ENGINEER accepted form. All submittals shall be submitted electronically. Responses to submittals will also be performed electronically.

B. Sequentially number the transmittal forms. Resubmittals to have original number with an alphabetic suffix.

C. Identify Project, CONTRACTOR, Subcontractor or supplier; pertinent Drawing sheet and detail number(s), and specification Section number, as appropriate.

D. Apply CONTRACTOR's stamp, signed or initialed certifying that review, verification of Products required, field dimensions, adjacent construction Work, and coordination of information, is in accordance with the requirements of the Work and Contract Documents.

E. Schedule submittals to expedite the Project, and deliver to ENGINEER at their business address. Coordinate submission of related items.

F. Identify variations from Contract Documents and Product or system limitations which may be detrimental to successful performance of the completed Work.

G. Provide space for CONTRACTOR and ENGINEER review stamps on each submittal.

H. Only complete submittals will be reviewed. Partial or incomplete submittals for a product will be returned to the CONTRACTOR without review.

I. Revise and resubmit submittals as required, identify all changes made since previous submittal.

J. Distribute copies of reviewed submittals to concerned parties. Instruct parties to promptly report any inability to comply with provisions.

K. Provide an updated Submittal Log at the end of each week that tracks the date the submittal was transmitted, the date the submittal was returned, and the status of each submittal.

L. All approved submittals to be saved electronically, in PDF format, and provided on a CD along with As-Built Plans and O&M Manuals at the end of the project.

## 1.04 CONSTRUCTION PROGRESS SCHEDULES

A. Submit initial progress schedule as required in the “General Conditions”.

B. Revise and resubmit as required in the “General Conditions”.

C. Submit revised schedules with each Application for Payment, identifying changes since previous version.

D. Submit a horizontal bar chart with separate line for each major section of Work or operation, identifying first work day of each week.

E. Show complete sequence of construction by activity, identifying Work of separate stages and other logically grouped activities. Indicate the early and late start, early and late finish, float dates, and duration.

F. Indicate estimated percentage of completion for each item of Work at submission of each Application for Payment.

G. At the end of each week, CONTRACTOR shall submit a written two (2) week look ahead describing the construction activities that will take place to allow for coordination with ENGINEER, OWNER, and other parties.

## 1.05 CONTRACTOR'S DAILY FIELD NOTES

A. Submittal of daily field notes/activities logs is required with each progress payment application covering all days worked during the period covered by the progress payment application.

## 1.06 TEMPORARY FENCING AND SCREENING PLAN

A. Submit temporary fencing and screening plan to ENGINEER for review.

## 1.07 DEWATERING PLANS

A. Submit dewatering plans to ENGINEER for review.

B. After ENGINEER's review of dewatering plans, CONTRACTOR shall submit plans to proper governing authority and receive permits for dewatering prior to construction.

C. CONTRACTOR is responsible for paying any dewatering permit fees.

## 1.08 TESTING PLANS

A. CONTRACTOR shall submit plans to ENGINEER for review.

## 1.09 TEMPORARY TRENCHING, SHEETING, AND SHORING PLAN

A. CONTRACTOR shall submit plans to proper governing authority for approval.

## 1.10 PROPOSED PRODUCTS LIST AND INFORMATION

A. Submit complete list of major products proposed for use, with name of manufacturer, trade name, and model number or each product.

B. For products specified only by reference standards, give manufacturer, trade name, model or catalog designation, and reference standards.

## 1.11 SHOP DRAWINGS

A. After review, distribute in accordance with Article on Procedures above and for Record Documents described in **Section 01780 - Contract Closeout**.

## 1.12 PRODUCT DATA

A. Submit the number of copies which the CONTRACTOR requires, plus four (4) copies, which will be retained by the ENGINEER.

B. Mark each copy to identify applicable products, models, options, and other data. Supplement manufacturers' standard data to provide information unique to this Project.

C. After review, distribute in accordance with Article on Procedures above and provide copies for Record Documents described in **Section 01780 - Contract Closeout.**

## 1.13 MANUFACTURER'S INSTRUCTIONS

A. When specified in individual specification Sections, submit manufacturers' printed instructions for delivery, storage, assembly, installation, start-up, adjusting, and finishing, in quantities specified for Product Data.

B. Identify conflicts between manufacturers' instructions and Contract Documents.

## 1.14 MANUFACTURER'S CERTIFICATES

A. When specified in individual specification Sections, submit manufacturers' certificate to ENGINEER for review, in quantities specified for Product Data.

B. Indicate material or Product conforms to or exceeds specified requirements. Submit supporting reference data, affidavits, and certifications as appropriate.

C. Certificates may be recent or previous test results on material or Product, but must be acceptable to ENGINEER.

## 1.15 MAINTENANCE OF TRAFFIC

A. Prepare and submit a Work Zone Traffic Control Plan to the appropriate officials in all municipalities and jurisdictions where the work will impact the flow of traffic. Obtain written approval of that plan from all municipalities and jurisdictions, then provide copies of the plan and all approvals to the OWNER and ENGINEER prior to the start of construction. Also, submit plan to maintain/control pedestrian traffic in the work area.

# PART 2 – PRODUCTS

NOT USED

# PART 3 – EXECUTION

NOT USED

**END OF SECTION**

*This page intentionally left blank*

# SECTION 01360

# PRE-CONSTRUCTION AUDIO-VIDEO DOCUMENTATION

## PART 1 - GENERAL

### 1.01 PERFORMANCE

A. Section generally defines CONTRACTOR's responsibilities, unless otherwise rated, for the following:

1. Audio-Video Documentation.
2. Equipment.
3. Submittals.
4. Technique.
5. Quality Assurance.

### 1.02 QUALITY ASSURANCE

A. Documentation shall be performed by a responsible commercial firm known to be skilled and regularly engaged in the preparation of pre-construction color audio-video documentation. **Any Preconstruction video produced by the CONTRACTOR will be immediately rejected.** All preconstruction videos are to be completed by a firm with extensive amount of previous experience in producing preconstruction documentation.

B. Completed documentation shall reproduce bright, sharp pictures with accurate colors and shall be free from distortion, tearing, rolling, or any other significant picture imperfection. The audio portion of the recording shall reproduce the commentary of the camera operator with proper volume, clarity, and be free of distortion and shall be recorded in fluent English.

C. Construction shall not proceed until the OWNER and ENGINEER have reviewed the documentation and notified the CONTRACTOR of its acceptability.

### 1.03 MEASUREMENT AND PAYMENT

A. No separate payment item is provided for this work. The cost of performing this work shall be incorporated into the bid items or lump sum amount identified on the bid form.

## PART 2 - PRODUCTS

### 2.01 RECORDING EQUIPMENT

A. Utilize color video camera having:

1. Horizontal Resolution of 350 lines at center.

2. 8:1 Zoom, minimum.

B. Utilize digital format recorder having:

1. Minimum horizontal resolution of 540 lines, 60 fields.

### 2.02 RECORDING MEDIA

A. Utilize new, Digital Video Disc (DVD) having:

1. DVD shall be DVD-R. DVD-RAM shall not be accepted.

2. 4¾ inches diameter discs.

2. High resolution.

3. 4.7 gigabyte storage per layer with two layers (minimum).

## PART 3 - EXECUTION

### 3.01 COVERAGE

A. Record coverage of all surface features located in the construction's zone of influence (including the proposed storage area(s)) including, but not limited to:

1. Roadways, driveways, sidewalks.

2. Treatment facilities, surrounding structures, sanitary facilities.

3. Drainage structures, abovegrade utilities, drainage swales, canals.

4. Landscaping, trees, shrubbery, fences, irrigation heads, meters.

B. Record the individual features of each item with particular attention being focused upon the existence of any faults, fractures, or defects.

C. Control pan rate, rate of travel, camera height and zoom rate to maintain a steady clear view at all times.

D. Limit recorded coverage to one side of any street at any one time.

E. Create a single, continuous, unedited recording that begins and ends within each portion of a particular construction area. The recording shall proceed in the direction of ascending baseline stationing.

## 3.02 AUDIO CONTENT

A. Simultaneously record audio content during videotaping.

B. Audio recording shall assist in viewer orientation and in any needed identification, clarification, or description of features being recorded.

C. Audio recording will only consist of camera operator commentary.

## 3.03 INDEXING

A. Permanently label each tape with a sequential tape number and the project name.

B. Index each DVD with a digital record of the time and date of the recording that is continuously displayed as the DVD is played.

C. Prepare a written log which describes the contents of each DVD including:

1. Structure/location names.

2. Coverage begin/end, station and location.

3. Recording date.

## 3.04 CONDITIONS

A. Record coverage during dry, clear weather and during daylight hours only.

B. Record coverage when the area to be covered is free of debris or obstructions.

C. Record coverage no more than 15 days prior to the start of construction.

**END OF SECTION**

*This page intentionally left blank.*

# SECTION 01400

# QUALITY CONTROL

## PART 1 - GENERAL

### 1.01 PERFORMANCE

A. Section generally defines CONTRACTOR's responsibilities, unless otherwise indicated, for the following:

1. Quality assurance and control of installation.

2. References.

3. Inspection and testing laboratory services.

### 1.02 QUALITY ASSURANCE/CONTROL OF INSTALLATION

A. Monitor quality control over suppliers, manufacturers, products, services, site conditions, and workmanship, to produce Work of specified quality.

B. Comply fully with manufacturers' instructions, including each step in sequence.

C. Should manufacturers' instructions conflict with Contract Documents, request clarification from ENGINEER before proceeding.

D. Comply with specified standards as a minimum quality for the Work except when more stringent tolerances, codes, or specified requirements indicate higher standards or more precise workmanship.

E. Perform work by persons qualified to produce workmanship of specified quality.

F. Secure products in place with positive anchorage devices designed and sized to withstand stresses, vibration, physical distortion or disfigurement.

G. Provide devices or utilize methods necessary for compliance with the "Trench Safety Act".

### 1.03 REFERENCES

A. Conform to reference standard as identified in each individual technical specification section.

B. Should specified reference standards conflict with Contract Documents, request clarification from ENGINEER before proceeding.

C. The contractual relationship of the parties to the Contract shall not be altered from the Contract Documents by any reference standard or document.

## 1.04 INSPECTION AND TESTING LABORATORY SERVICES

A. CONTRACTOR will appoint, employ, and pay for services of an independent firm to perform inspection and testing.

B. The independent firm will perform inspections, tests, and other services specified in individual specification Sections and as required by the ENGINEER.

C. Reports will be submitted by the independent firm to the ENGINEER, in duplicate, indicating observations and results of tests and indicating compliance or non-compliance with Contract Documents.

D. Cooperate with independent firm; furnish samples of materials, design mix, equipment, tools, storage and assistance as requested.

1. Notify ENGINEER and independent firm 24 hours prior to expected time for operations requiring services.

2. Make arrangements with independent firm and pay for additional samples and tests required for CONTRACTOR's use.

E. Retesting required because of non-conformance to specified requirements shall be performed by the same independent firm on instructions by the ENGINEER. The cost for retesting shall be the CONTRACTOR’s responsibility.

F. Testing to be provided by the CONTRACTOR shall include, at a minimum:

1. Testing of the surficial aquifer production well, per **Division 3 - Well Construction and Concrete Work** and **Division 4 - Well Testing** of these Specifications.

2. Density testing.

3. Concrete testing.

4. Testing of the raw water main and wellhead.

G. The CONTRACTOR shall provide a calibrated seismograph at all times during well drilling activities to monitor vibration at the site. The seismograph shall be recently calibrated and with a suitable indicator range. The CONTRACTOR shall be responsible for any damage due to excessive vibration. Off-site vibrations shall be limited to 0.5 inches per second (Peak Particle Velocity, PPV). The CONTRACTOR shall complete a vibration attenuation study (vibration levels versus distance) prior to construction using the proposed construction equipment at the highest impact energy possible.

## PART 2 - PRODUCTS

NOT USED

**PART 3 - EXECUTION**

NOT USED

**END OF SECTION**

*This page intentionally left blank.*

# SECTION 01500

# CONSTRUCTION FACILITIES AND TEMPORARY CONTROLS

## PART 1- GENERAL

### 1.01 PERFORMANCE

A. Section generally defines CONTRACTOR's responsibilities, unless otherwise indicated, for the following:

1. Temporary Utilities: Electricity, water, and sanitary facilities.

2. Temporary Controls: Barriers, enclosures and fencing and screening, protection of the Work.

3. Construction Facilities: Parking, progress cleaning, and project signage.

### 1.02 RELATED SECTIONS

A. **Section 01780 – Closeout Submittals**: Final cleaning.

### 1.03 TEMPORARY ELECTRICITY

A. CONTRACTOR will provide temporary 110 VAC power, if existing at well or lift station locations, and CONTRACTOR may use at no cost.

B. CONTRACTOR will provide portable power supply as required.

C. CONTRACTOR will provide power outlets for construction operations, with branch wiring and distribution boxes located as needed. Provide flexible power cords as required.

### 1.04 TEMPORARY WATER SERVICE

A. CONTRACTOR shall be responsible for supplying any potable or non-potable water needed for this project.

### 1.05 TEMPORARY SANITARY FACILITIES

A. CONTRACTOR shall provide and maintain required facilities.

### 1.06 BARRIERS AND TRAFFIC CONTROL

A. Provide barriers to prevent unauthorized entry to construction areas and to protect

existing facilities and adjacent properties from damage due to construction operations and demolition.

B. Provide protection for natural vegetation designated to remain. Replace protected vegetation, if damaged.

C. Protect all landscaping and decorative vegetation. Restore damaged landscaping and vegetation to its original condition.

D. Protect non-owned vehicular traffic, stored materials, site and structures from damage.

E. Provide signs, signals, cones, barricades and trained flagmen to direct traffic in and around the construction site in accordance with Florida Department of Transportation Work Zone Traffic Control Standards.

1. Prepare a WORK ZONE TRAFFIC CONTROL PLAN and submit that plan to the appropriate officials in all municipalities and jurisdictions where the Work will impact the flow of traffic.

2. Obtain written approval of that plan from all municipalities and jurisdictions, and then provide copies of the plan and all approvals to the OWNER and ENGINEER prior to the start of construction. All approvals must be obtained prior to construction.

3. Keep specified areas open and accessible at all times. Roads must be kept open at all times. Flow bypass ramps or buried hoses are required to maintain traffic access.

## 1.07 PROTECTION OF INSTALLED WORK

A. Protect installed Work and provide special protection where specified in individual specification Sections.

B. Provide temporary and removable protection for existing and installed Products. Control activity in immediate work area to minimize damage.

C. Provide protective coverings as needed.

D. Protect finished floors, stairs, roadways, and other surfaces from traffic, dirt, wear, damage, or movement of heavy objects, by protecting with durable sheet materials.

## 1.08 SECURITY/TEMPORARY FENCING AND SCREENING

A. Provide security and facilities to protect Work from unauthorized entry,

vandalism, or theft.

B. Provide temporary fencing and screening to protect Work from unauthorized entry, vandalism, or theft.

## 1.09 ACCESS ROADS

A. Construct and maintain temporary roads accessing public thoroughfares to serve construction area. Access routes shall be restored to preexisting conditions or better upon conclusion of the project.

B. Extend and relocate as Work progress requires. Provide detours necessary for unimpeded traffic flow. Coordinate interruptions in normal public vehicular traffic flow with those governmental agencies having authority over each roadway.

## 1.10 PARKING

A. Provide temporary parking areas to accommodate construction personnel.

B. Temporary parking areas must not interfere with normal traffic flow or designated parking for others.

C. Temporary parking areas must be approved by the ENGINEER and OWNER.

## 1.11 PROGRESS CLEANING

A. Maintain all construction areas free of waste materials, debris, and rubbish. Maintain all sites in a clean and orderly condition.

B. Broom and vacuum clean areas prior to start of surface finishing, and continue cleaning to eliminate dust.

C. Remove waste materials, debris, and rubbish from site daily and dispose of at approved location.

D. Always keep roadways, sidewalks and bicycle paths clear of construction debris and trash.

E. Provide positive methods and apply dust control materials to minimize raising dust form construction operations, and provide positive means to prevent air-borne dust from dispersing into the atmosphere. CONTRACTOR shall immediately mitigate dust upon complaint.

## 1.12 REMOVAL OF UTILITIES, FACILITIES, AND CONTROLS

A. Remove temporary above grade or buried utilities, equipment, facilities, materials, prior to Final Application for Payment inspection.

B. Remove underground installations to a minimum depth of three (3) feet.

C. Clean and repair damage caused by installation or use of temporary work.

D. Restore existing facilities used during construction to original condition. Restore permanent facilities used during construction to specified condition.

## PART 2 - PRODUCTS

NOT USED

## PART 3 - EXECUTION

NOT USED

**END OF SECTION**

# SECTION 01600

# MATERIAL AND EQUIPMENT

## PART 1 - GENERAL

### 1.01 PERFORMANCE

A. Section generally defines CONTRACTOR's responsibilities, unless otherwise indicated, for the following:

1. Products.
2. Transportation and handling.
3. Storage and protection.
4. Product options.
5. Substitutions.

### 1.02 RELATED SECTIONS

A. Instructions to Bidders: Product options and substitution procedures.

B. **Section 01400 - Quality Control**: Product quality monitoring.

### 1.03 PRODUCTS

A. Products: Means new material, machinery, components, equipment, fixtures, and systems forming the Work. Does not include machinery and equipment used for preparation, fabrication, conveying and erection of the Work. Products may also include existing materials or components required for reuse.

B. Do not use materials and equipment removed from existing premises, except as specifically permitted by the Contract Documents.

### 1.04 TRANSPORTATION AND HANDLING

A. Transport and handle Products in accordance with manufacturer's instructions.

B. Promptly inspect shipments to assure that Products comply with requirements, quantities are correct, and Products are undamaged.

C. Provide equipment and personnel to handle Products by methods which prevent soiling, disfigurement, or damage.

### 1.05 STORAGE AND PROTECTION

A. Store and protect Products in accordance with manufacturer's instructions, with seals and labels intact and legible. Store sensitive Products in weather-tight, climate controlled enclosures.

B. For exterior storage of fabricated Products, place on secure supports, above ground.

C. Provide off-site storage and protection when site does not permit on-site storage or protection. On-site storage of products must be approved by the OWNER and ENGINEER prior to delivery.

D. Cover Products subject to deterioration with impervious sheet covering. Provide ventilation to avoid condensation.

E. Store loose granular materials on solid flat surfaces in a well-drained area. Prevent mixing with foreign matter.

F. Arrange storage of Products to permit access for inspection. Periodically inspect to assure Products are undamaged and are maintained under specified conditions.

## 1.06 PRODUCT OPTIONS

A. Products Specified by Reference Standards or by Description Only: Any Product meeting those standards or description.

B. Products Specified by Naming One or More Manufacturers: Products of manufacturers named and meeting specifications, no options or substitutions allowed.

C. Products Specified by Naming One or More Manufacturers with a Provision for Substitutions: Submit a request for substitution for any manufacturer not named.

## 1.07 SUBSTITUTIONS

A. Instructions to Bidders specify time restrictions for submitting requests for Substitutions during the bidding period to requirements specified in this Section.

B. Substitutions may be considered when a Product becomes unavailable through no fault of the CONTRACTOR.

C. Document each request with complete data substantiating compliance of proposed Substitution with Contract Documents.

D. A request constitutes a representation that the Bidder:

1. Has investigated proposed Product and determined that it meets or exceeds the quality level of the specified Product.

2. Will provide the same warranty for the Substitution as for the specified Product.

3. Will coordinate installation and make changes to other Work that may be required for the Work to be complete with no additional cost to OWNER.

4. Waives claims for additional costs or time extension that may subsequently become apparent.

5. Will reimburse OWNER for review or redesign services associated with re-approval by the ENGINEER or governing authorities.

E. Substitutions will not be considered when they are indicated or implied on shop drawing or product data submittals without separate written request, or when acceptance will require revision to the Contract Documents.

F. Substitution Submittal Procedure:

1. Submit three (3) copies of request for Substitution for consideration. Limit each request to one proposed Substitution.

2. Submit shop drawings, Product data, and certified test results attesting to the proposed Product equivalence.

G. The ENGINEER will notify CONTRACTOR, in writing, of decision to accept or reject request.

**PART 2 - PRODUCTS**

NOT USED

**PART 3 - EXECUTION**

NOT USED

**END OF SECTION**

*This page intentionally left blank.*

# SECTION 01720

# RECORD DOCUMENTS

## PART 1 - GENERAL

### 1.01 PERFORMANCE

A. Section generally defines CONTRACTOR's responsibilities, unless otherwise indicated, for the following:

1. On-site maintenance of Record Documents.
2. Required record information.

### 1.02 MAINTENANCE

A. Maintain on site, one (1) set of the following Record Documents; record actual revisions to the Work:

1. Drawings.
2. Specifications.
3. Addenda.
4. Change Orders and other modifications to the Contract.
5. Shop Drawings, product data, and samples.
6. Building Permits.
7. Other Permits as necessary.

B. Store Record Documents separate from documents used for construction.

C. Record information concurrent with construction progress.

D. In the interest of timely detection of non-conforming Work, all Record Drawing information for the partially completed work must be furnished to the ENGINEER prior to submitting for periodic progress payments on the partially completed Work.

E. Under no circumstances will pavement restoration Work be allowed to start until the ENGINEER has reviewed the Record Drawing information for Work constructed within the area that pavement will be restored.

F. All Record Drawing information must be obtained by a Professional Land Surveyor, who is licensed in the State of Florida. Information must be signed and sealed.

G. Record Documents must be available to ENGINEER for examination at any time during the progress of the Work.

H. Submit completed Record Documents upon completion of the Work, at each partial pay request, and prior to application for final payment.

I. The Surveyor to be utilized shall have successfully completed three (3) Record Drawing projects within the last two (2) years within the Village of Palm Springs Service area (i.e. has completed three sets of Record Drawings that have been reviewed by Village Staff and is familiar with the requirements of the Village of Palm Springs.)

## 1.03 REQUIRED RECORD DRAWING INFORMATION

A. General

1. All drawings included as part of the Contract Documents shall be submitted as part of the record drawing submittal.

2. Label drawings “Record Drawings” with date.

3. Complete title block with current file name.

4. Location sketch.

5. Design information shall be crossed out and the record drawing information shall be included in bold.

6. Two (2) signed and sealed sets of Record Drawings.

7. One (1) signed and sealed set of Record Drawings on Mylar.

8. Two (2) digital copies of Record Drawings in AutoCAD 2000 format or later and one (1) copy, in PDF format, on CD.

9. Additional copies as required for permitting closeout as requested by the ENGINEER.

10. Design information which is no longer applicable to the installed components and/or configuration shall be crossed-out.

11. Design elevations shall be crossed out and the installed elevations shall be recorded where applicable.

B. Concrete Pad

1. Include Northing/Easting and latitude/longitude of the corners of the concrete slab, and slab elevation.

C. Electrical

1. Include location of electrical and instrument panels, rocks, pull boxes, transformers, equipment panels, grounding rods and test wells, and conduit. Conduit information shall include depth of cover and separation between other utilities where they cross each other.

## PART 2 - PRODUCTS

NOT USED

## PART 3 - EXECUTION

### 3.01 SURVEYOR RESPONSIBILITIES

A. Signed and sealed prints are to be submitted for each pay requisition and appropriate stages of construction as designated by the ENGINEER.

B. Mark information on the Drawing in a manner that indicates which elevations and dimensions have been checked. This is to be done by crossing through the design elevation or dimension and placing the Record information next to it. If an elevation or dimension has not changed, the same procedure should be followed to confirm that it has been checked. Add new information in a manner to indicate that it is Record information and not design information.

C. Each Record Drawing sheet must include the surveyor's name, company, address, and registration number.

D. Prior to the conclusion of the Project, CONTRACTOR shall submit the required number of signed and sealed copies of the Record Drawings to the ENGINEER for the purpose of closing all of the outstanding permits.

E. At the conclusion of the Project, submit two final sets of signed and sealed prints and a signed and sealed set of Mylar’s to the ENGINEER for permanent record keeping, along with two (2) digital copies of the Record Drawings on CD in AutoCAD 2000 format or later and one (1) copy, in PDF format, on CD. In addition, the CONTRACTOR shall provide the required number of copies to the ENGINEER to assist in the closing out of all necessary permits.

**END OF SECTION**

# SECTION 01730

# OPERATION & MAINTENANCE MANUALS

## PART 1 - GENERAL

### 1.01 SECTION INCLUDES

A. Detailed information for the preparation, submission, and ENGINEER's review of Operation and Maintenance (O&M) Data, as required by individual specification Sections. The O&M information shall be prepared specifically for this project, and shall include all sections and organization as specified herein.

### 1.02 DEFINITIONS

A. Preliminary Data: Initial and subsequent submissions for ENGINEER's review.

B. Final Data: ENGINEER-accepted data, submitted as specified herein.

C. Maintenance Operation: As used on Maintenance Summary Form is defined to mean any routine operation required to ensure satisfactory performance and longevity of equipment. Examples of typical maintenance operations are lubrication, belt tensioning, adjustment of pump packing glands, and routine adjustments.

### 1.03 SEQUENCING AND SCHEDULING

A. Equipment and System Data.

1. Preliminary Data:

a. Do not submit until Shop Drawing for equipment or system has been reviewed and approved by ENGINEER and OWNER.

b. Submit prior to shipment date.

2. Materials and Finished Data

a. Preliminary Data: Submit at least 15 days prior to request for start-up.

b. Final Data: Submit within 10 days after final inspection.

## 1.04 DATA FORMAT

A. Prepare preliminary data in the form of an instructional manual. Prepare final data in data compilation format in electronic media.

B. Instructional Manual Format:

1. Binder: Commercial quality, permanent, three-ring or three-post binders with durable plastic cover.

2. Size: 8½ inches by 11 inches, minimum.

3. Cover: Identify manual with typed or printed title "OPERATION AND MAINTENANCE MANUAL" and list:

   a. Project title.

   b. Month and year.

   c. Designate Applicable system, equipment, material, or finish.

   d. Identity of separate structure as applicable.

   e. Identity of general subject matter covered in the manual.

   f. Spine shall have the project title, month and year, and "OPERATION AND MAINTENANCE MANUAL" printed on it.

4. Title Page

   a. CONTRACTOR name, address, and telephone number.

   b. Subcontractor, supplier, installer, or maintenance contractor's name address, and telephone number, as appropriate.
      i. Identify area of responsibility of each.
      ii. Provide name and telephone number of local source of supply for parts and replacement.

5. Table of Contents:

   a. Neatly typewritten and arranged in systematic order with consecutive page numbers.

   b. Identify each product by product name and other identifying numbers or symbols set forth in the Contract Documents.

6. Paper: 20-pound minimum, white for typed pages.

7. Text: manufacturer's printed data, or neatly typewritten.

8. Three-hole punch data for binding and composition; arrange printing do that punched holes do not obliterate data.

9. Material shall be suitable for reproduction, with quality equal to original. Photocopying of materials will be acceptable, except for material containing photographs.

C. Data Compilation Format:

1. Compile all ENGINEER-accepted preliminary O&M data into a hard-copy, hard-bound set.

2. Each set shall consist of the following:

a. Binder: Commercial quality, permanent, three-ring or three-post binders with durable plastic cover.

b. Cover: Identify each volume with typed or printed title "OPERATION AND MAINTENANCE MANUAL, VOLUME NO. ____ OF _____", and list:
   i. Project title
   ii. CONTRACTOR's name, address, and telephone number.
   iii. If entire volume covers equipment or system provided by one (1) supplier include the following:
      a) Identity of general subject matter covered in the Manual.
      b) Identity of equipment number and specification Section.

c. Provide each volume with title page and typed table of contents with consecutive page numbers. Place content of entire set, identified by volume number in each binder.

d. Table of contents neatly typewritten, arranged in systematic order:
   i. Include list of each product, indexed to content of each volume.
   ii. Designate system or equipment for which it is intended.
   iii. Identify each product by product name and other identifying numbers or symbols set forth in the Contract Documents.

e. Section Dividers:
   i. Heavy, 80-pound cover weight, tabbed with numbered plastic index tabs.
   ii. Fly-leaf:
      a) For each separate product, or each piece of operating equipment, with typed description of product and major component parts of equipment.
      b) List with each product:
         i. Name address, and telephone of subcontractor, suppliers, installer and maintenance contractor as applicable.
         ii. Identity area of responsibility of each.
         iii. Provide local source of supply for parts and replacement.
   iii. Identity of separate structure as applicable.

f. Assemble and bind material, as much as possible, in the same order as specified in the Contract Documents.

D. Electronic Media Format:

1. Portable Document Format (PDF):

a. After all preliminary data has been found to be acceptable to the ENGINEER, submit O&M data in PDF format on CD.

b. Files to be exact duplicates of ENGINEER-accepted preliminary data. Arrange by specification number and name.

c. Files to be fully functional and viewable in the latest version of Adobe Acrobat.

d. The table of contents shall include hot links to the individual sections.

## 1.05 SUBMITTALS

A. Informational

1. Data outline: submit two (2) copies of a detailed outline if the proposed organization and content of the Final Manuals prior to preparation of the preliminary manuals.

2. Preliminary Data:

a. Submit two (2) copies for ENGINEER's review.

b. If data meets conditions of the Contract:
   i. One (1) copy will be returned to the CONTRACTOR.
   ii. One (1) copy will be forwarded to the project representative.

c. If data does not meet conditions of the Contract:
   i. All copies will be returned to the CONTRACTOR with the ENGINEER's comments for revision.
   ii. ENGINEER's comments will be retained in ENGINEER's file.
   iii. Resubmit two (2) copies revised in accordance with the ENGINEER's comments.

3. Final Data: Submit two (2) copies in format specified herein.

## 1.06 DATA FOR EQUIPMENT AND SYSTEMS

A. Content for each unit (or common Units) and system:

1. Product Data:

   a. Include only those sheets that are pertinent to specific product.

   b. Clearly annotate each sheet to:
      i. Identify specific product or part installed.
      ii. Identify data applicable to installation.
      iii. Delete references to inapplicable information.

   c. Function, normal operating characteristics, and limiting conditions.

   d. Performance curves, engineering data, nameplate data, and tests.

   e. Complete nomenclature and commercial number of replaceable parts.

   f. Original manufacturer's part list, illustrations, detailed assembly drawings showing each part with part numbers and sequentially numbered part list, and diagrams required for maintenance.

   g. Spare parts ordering instructions.

   h. Where applicable, identify installed spares and other provisions for future work (e.g. reserved panel space, unused components, wiring, and terminals).

2. As-installed, color coded piping diagrams.

3. Charts of valve tag numbers, with the location and function of each valve.

4. Drawings: Supplement product data with Drawings as necessary to clearly illustrate:

    a. Format:
        i. Provide reinforced, punched, binder tab: bind in with text.
        ii. Reduced to 8½ inches by 11 inches, or 11 inches by 17 inches folded to 8½ inches by 11 inches.
        iii. Where reduction is impractical, fold and place in 8½ inch by 11 inch envelopes bound in text.
        iv. Identify specification section and product on drawings and envelopes.

    b. Relations of component parts of equipment and systems.

    c. Control and flow diagrams.

    d. Coordinate drawings with Project record documents to assure correct illustration of completed installation.

5. Instructions and procedures: Within text, as required to supplement product data.

    a. Format:
        i. Organize in consistent format under separate heading for each different procedure.
        ii. Provide logical sequence of instructions for each procedure.
        iii. Provide information sheet for OWNER's personnel, including:
            a) Proper procedures in the event of failure.
            b) Instances that might affect validity of guarantee or bond.

    b. Installation instructions: Including alignment, adjusting, calibrating, and checking.

    c. Operating procedures:
        i. Startup, break-in, routine, and normal operating instructions.
        ii. Test procedures and results of factory tests where required.
        iii. Regulation, control, stopping, and emergency instructions.
        iv. Description of operating sequence by control manufacturer.
        v. Shutdown instructions for both short and extended duration.
        vi. Summer and winter operating instructions, as applicable.
        vii. Safety precautions.
        viii. Special operating instructions.

d. Maintenance and Overhaul procedures:
   i. Routine maintenance.
   ii. Guide to troubleshooting.
   iii. Disassembly, removal, repair, reinstallation, and reassembly.

6. Start-up information and test reports.

7. Guarantee, bond, and service agreement: in accordance with **Section 01780 - Closeout Submittals.**

B. Content for each electronic item or system:

1. Description of unit and component parts:

   a. Function, normal operating characteristics, and limiting conditions.

   b. Performance curves, engineering data, nameplate data, and tests.

   c. Complete nomenclature and commercial number of replaceable parts.

   d. Interconnection wiring diagrams, including control and lighting systems.

2. Circuit directories of panelboard:

   a. Electrical service.

   b. Controls.

   c. Communication.

3. List of electrical relay settings and control and alarm contact settings. Include a copy of all configuration settings and files on a USB thumb-drive.

4. Electrical interconnection wiring diagram, including control and lighting systems.

5. As-installed control diagrams by control manufacturer.

6. Grounding measurements

7. Operating procedures:

   a. Routine and normal operating instructions.

b. Sequences required.

c. Safety precautions.

d. Special operating instructions.

8. Maintenance procedures:

a. Routine maintenance.

b. Guide to troubleshooting.

c. Adjustment and checking.

d. List of relay settings, control, and alarm contact settings.

9. Manufacturer's printed operating and maintenance instructions.

10. List of original manufacturer's spare parts, manufacturer's current prices, and recommended quantities to be maintained in storage.

11. Start-up information and test reports.

C. Maintenance summary

1. Compile individual maintenance summary for each applicable equipment item, respective unit or system, and for components of subunits.

2. Format:

a. Use maintenance summary form bound with this Section.

b. Each maintenance summary may take as many pages as needed.

c. Use only 8½ x 11 paper.

d. Complete using typewriter or electronic printing.

3. Include detailed lubrication instructions and diagrams showing points to be greased or oiled; recommended type, grade, and temperature range of lubricants and frequency of lubrication.

4. Recommended spare parts:

a. Data to be consistent with manufacturer's bill of materials/parts list furnished in the O&M Manuals.

b. “Unit” is the unit of measure for ordering the part.

c. “Quantity” is the number of units recommended.

d. “Unit Cost” is the current purchase price.

## 1.07 DATA FOR MATERIALS AND FINISHES

A. Content for architectural products, applied materials and finishes:

1. Manufacturer’s data, giving full information on products:

a. Catalog number, size, and composition.

b. Color and texture designations.

c. Information required for reordering special manufactured products

2. Instructions for care and maintenance

a. Manufacturer’s recommendation for types of cleaning agents and methods.

b. Cautions against cleaning agents and methods that are detrimental to product.

c. Recommended schedule for cleaning and maintenance.

B. Content for moisture protection and weather exposed products.

1. Manufacturer’s data, giving full information on products:

a. Applicable standards.

b. Chemical composition.

c. Details of installation.

2. Instructions for inspection, maintenance and repair.

## 1.08 ADDITIONAL ITEMS FOR THE O&M MANUAL

A. Record drawings provided by the CONTRACTOR.

B. CD containing the approved submittals for the project.

## 1.09 SUPPLEMENTS

A. The supplement listed below, following "END OF SECTION," are part of this specification.

1. Form: Maintenance Summary Form.

## PART 2 - PRODUCTS

NOT USED

## PART 3 - EXECUTION

NOT USED

**END OF SECTION**

# MAINTENANCE SUMMARY FORM

PROJECT: _____ CONTRACT NO.:_____

1. EQUIPMENT ITEM_____

2. MANUFACTURER _____

3. EQUIPMENT/TAG NUMBER_____

4. WEIGHT OF INDIVIDUAL COMPONENTS (OVER 100 POUNDS)_____

5. NAMEPLATE DATA (hp, voltage, speed, etc.)_____

6. MANUFACTURER'S LOCAL REPRESENTATIVE_____

   a. Name_____ Telephone No._____

   b. Address_____

7. MAINTENANCE REQUIREMENTS

| Maintenance Operation Comments | Frequency | Lubricant (If Applicable) |
|---|---|---|
| List briefly each maintenance operation required and refer to specific information in manufacturer's standard maintenance manual, if applicable. (Reference to manufacturer's catalog or sales literature is not acceptable. | List required frequency of each maintenance operation. | Refer by symbol to lubricant required. |
| | | |
| | | |
| | | |
| | | |
| | | |
| | | |
| | | |
| | | |

8. LUBRICANT LIST

| Reference Symbol | Shell | Exxon Mobil | Chevron Texaco | BP Amoco | Or Equal |
|---|---|---|---|---|---|
| List Symbols used in No. 7 above | List equivalent lubricants as distributed by each manufacture for the specific use recommended. | | | | |
| | | | | | |
| | | | | | |
| | | | | | |
| | | | | | |
| | | | | | |
| | | | | | |
| | | | | | |
| | | | | | |
| | | | | | |
| | | | | | |
| | | | | | |
| | | | | | |
| | | | | | |

9. RECOMMENDED SPARE PARTS FOR OWNER'S INVENTORY

| Part No. | Description | Unit | Quantity | Unit Cost |
|---|---|---|---|---|
| | | | | |
| | | | | |
| | | | | |
| Note: Identify parts provided by this Contract with two asterisks. | | | | |

# SECTION 01750

# GENERAL REQUIREMENTS

## PART 1 - GENERAL

### 1.01 PERFORMANCE

A. Section generally defines CONTRACTOR's responsibilities, unless otherwise indicated, for the following:

1. Preservation of Property.
2. Siltation and Bank Erosion.
3. Utility Construction and Adjustment.
4. CONTRACTOR’s Responsibility.
5. Use of Chemicals.
6. Progress of Work.
7. OSHA.
8. Utilities and Structures Shown on the Plans.
9. Drainage.
10. Restoration of Surface Improvements.
11. Hours of Operation.
12. Cutting and Patching

### 1.02 PRESERVATION OF PROPERTY

A. Preserve from damage all property along the line of the work, or which is in the vicinity of or is in any way affected by the work, the removal or destruction of which is not called for by the plans.

B. Wherever such property is damaged due to the activities of the CONTRACTOR, it shall be immediately restored to its original condition by the CONTRACTOR at no cost to the OWNER. CONTRACTOR is made aware that the project area is a residential area. All areas disturbed by construction activities shall be immediately restored to existing conditions or better.

C. In case of failure on the part of the CONTRACTOR to restore such property, or make good such damage or injury, the OWNER may, after 48 hours notice to the

CONTRACTOR, proceed to repair, rebuild or otherwise restore such property as may be deemed necessary and the cost thereof will be deducted from any monies due or which may become due the CONTRACTOR under this contract.

## 1.03 SILTATION AND BANK EROSION

A. Take adequate precautions to minimize siltation and bank erosion in the vicinity of canals or ditches, in discharging well point systems or during other construction activities.

B. If well pointing, the CONTRACTOR shall notify the South Florida Water Management District and/or the Northern Palm Beach County Water Control District as applicable and procure and necessary permits.

## 1.04 UTILITY CONSTRUCTION AND ADJUSTMENT

A. Bid items for liner systems, pump stations, drainage structures, and appurtenances are for new work only.

B. Prices bid for these items shall include all work incidental thereto, such as pavement repair, existing pond lining repair, sodding, landscape and irrigation repair, and all other required restoration work unless otherwise called for.

C. Where it is necessary to relocate, lower or otherwise adjust existing mains and appurtenances as may be required to accomplish the new pipeline construction, the cost of work shall be included in the unit prices or lump sum bid for such new pipeline.

## 1.05 CONTRACTOR'S RESPONSIBILITY

A. The CONTRACTOR shall be held strictly responsible for all parts of the work.

B. If failures in the Work develop within one year from the date of final acceptance, the CONTRACTOR shall be required to replace all faulty material at his full expense. A one (1) year warranty walkthrough shall be attended by the CONTRACTOR with the ENGINEER and the OWNER.

C. The CONTRACTOR is advised to purchase material under a guarantee from the manufacturer, guaranteeing proper service under conditions that are established by the drawings, specifications and local conditions.

D. The CONTRACTOR shall also be responsible for the following:

1. Charges by others for assistance to the CONTRACTOR for such work as supporting, replacing, moving or providing protection for their facilities as necessitated by the CONTRACTOR's operation.

2. All costs of restoration of the work site to condition equal or better than prior to construction, including landscaping and irrigation systems.

3. All costs of restoration of pavements and structures damaged by the CONTRACTOR's operation. Likewise the CONTRACTOR shall pay all costs of restoring all work areas and all areas where construction materials are stored, whether new materials to be installed or materials removed from the work area incidental to the work solely to the satisfaction of the OWNER.

4. All public liability, property damage and contractual liability insurance required by others to permit the CONTRACTOR's operation.

## 1.06 USE OF CHEMICALS

A. Any chemical used by the CONTRACTOR during the course of construction shall meet the regulatory requirements of either the Environmental Protection Agency or the United States Department of Agriculture, and shall be approved by the ENGINEER prior to use.

B. All work shall comply with the Palm Beach County Wellfield ordinance. All chemicals and fuel shall be properly contained and any spills shall be immediately reported and cleaned at no additional cost to the OWNER.

## 1.07 PROGRESS OF WORK

A. If at any time, the materials and appliances to be used appear to the ENGINEER as insufficient or improper for securing the quality of work or rate of progress required for the project, he may order the CONTRACTOR to increase his efficiency or improve the character of work.

B. The failure of the ENGINEER to demand any increase of such efficiency or improvement shall not release the CONTRACTOR from his obligation to secure the quality of work or the rate of progress necessary to complete the work within the limits imposed by the Contract.

## 1.08 OSHA

A. Bidders must comply with the Department of Labor, Safety and Health Regulations for construction promulgated under the Occupational Safety and Health Act of 1970 (PL 91-956) and under Section 107 of the Contract Work Hours and Safety Standards Act (PL 91-54).

## 1.09 UTILITIES AND STRUCTURES SHOWN ON THE PLANS

A. Existing utilities and facilities are shown on the contract drawings only for the convenience of all parties concerned and were established without guarantee as to their accuracy or completeness of location.

B. Because of conflicting and sometimes erroneous information, certain facilities may not be located precisely as shown, or may be omitted entirely.

C. Prior to performing any work, the CONTRACTOR shall determine, by site inspection or otherwise, all pertinent data concerning the existing utilities, structures, and facilities, including the request of each utility agency to advise him of the location of their facilities in the work vicinity.

D. The CONTRACTOR shall be completely responsible for the relocation, as required, of existing utilities and structures with such work accomplished at no additional cost to the OWNER.

E. The OWNER and ENGINEER will assume no liability for damages sustained or costs incurred because of the CONTRACTOR's operations in the vicinity of the existing utilities or structures.

F. The CONTRACTOR shall schedule his work in such a manner that he is not delayed by the utility companies relocating or supporting their utilities. No compensation shall be made for such loss of time.

G. The position of certain structures and utilities directly affects the proposed construction. Therefore, in order to insure that the proposed work can actually be positioned as planned, the CONTRACTOR shall make any excavation necessary for location of structures and utilities prior to construction of that particular portion of the job.

H. All overhead, surface or underground structures encountered in trenching, whether shown on the Plans or not shown on the Plans, are to be carefully protected from injury or displacement, and all damage to such structures is to be completely repaired within a reasonable time; otherwise, the ENGINEER may give 24 hours notice to the CONTRACTOR, then repair the damage at the CONTRACTOR's expense.

I. All such repairs made by the CONTRACTOR are to be made to the satisfaction of the ENGINEER; all damaged pipes must be replaced or prevented from leaking. Also, all such repairs are to be inspected by the ENGINEER prior to backfilling. The CONTRACTOR must carefully protect from disturbance or injury, all monuments, stakes and bench marks, and shall not excavate nearer than five (5) feet to any of them until they have been removed, witnessed or otherwise disposed of by the ENGINEER.

## 1.10 DRAINAGE

A. Grading shall be controlled in the vicinity of excavations so that the surface of the ground will be properly sloped to prevent water from running into trenches or other excavated areas.

B. Any water that accumulates in the excavations shall be removed promptly by well point or by other means satisfactory to the ENGINEER in such a manner as to not create a nuisance to adjacent property or public thoroughfare.

C. Trenches shall be kept dry while pipe is being laid. Bridging of dewatering pipe shall be provided where necessary.

D. Pumps and engines for well point systems shall be operated with mufflers, at a minimum noise level suitable to a residential area.

E. The CONTRACTOR will not be allowed to discharge water into any storm drainage system without the written approval of the OWNER of that system.

F. Approval will be subject to the conditions that the storm sewer be returned to its original conditions.

G. The CONTRACTOR is responsible for carrying the water to the nearest ditch or body of water and for obtaining the necessary permission to use same.

H. The CONTRACTOR shall be financially responsible for any nuisance or damage created due to carrying off water from his drainage system.

## 1.11 RESTORATION OF SURFACE IMPROVEMENTS

A. Roadways, including shoulders, alleys and driveways of shell, limerock, asphalt, concrete, stabilized soil or gravel, grade plots, sod, shrubbery, ornamental trees, signs, mailboxes, fences, irrigation systems, or other surface improvements on public or private property which have been damaged or removed in excavating or other construction operations, shall be restored to conditions equal to or better than conditions existing prior to beginning work.

B. Restoration shall consist of sodding.

C. CONTRACTOR is urged to investigate existing irrigation systems in order to minimize repair work necessary. No extra costs will be paid as a result of damage to existing irrigation systems.

D. The cost of doing this work shall be included in the cost of the various applicable items or the lump sum bid amount unless a separate payment item has been established for specific restoration Work.

E. Pre-Construction Audio Video DVDs - as specified will be used as an aid in determining conditions prior to construction.

## 1.12 HOURS OF OPERATION

A. The CONTRACTOR is hereby informed and understands that certain noise between the hours of 6:00 PM and 8:00 AM is restricted. Therefore, the work is restricted during these hours, unless emergency conditions exist that are endangering life or property, as may be determined by the ENGINEER.

B. If the CONTRACTOR is authorized to operate equipment 24 hours per day, the engines shall be provided with residential type silencers approved by the ENGINEER.

C. The CONTRACTOR shall not perform any work activities outside of the normal Village of Palm Springs work hours without prior written authorization from the Village.

## 1.13 CUTTING AND PATCHING

A. Employ skilled and experienced installer to perform cutting and patching.

B. Submit written request in advance of cutting or altering elements which affects:

1. Structural integrity of element.

2. Integrity of weather-exposed or moisture-resistant elements.

3. Efficiency, maintenance, or safety of element.

4. Visual qualities of sight-exposed elements.

5. Work of OWNER or separate CONTRACTOR.

C. Execute cutting, fitting, and patching including excavation and fill, to complete Work, and to:

1. Fit the several parts of the Work together, to integrate with other Work.

2. Uncover Work for installation of subsequent Work or to correct ill-timed Work.

3. Remove and replace defective and non-conforming Work.

4. Remove samples of installed Work for testing.

5. Provide openings in elements of Work for penetrations by mechanical and electrical Work.

D. Execute Work by methods, which will avoid damage to other Work, and provide proper surfaces to receive patching and finishing.

E. Cut rigid materials using masonry saw or core drill, as required.

F. Restore Work with new Products in accordance with requirements of Contract Documents.

G. Construct a tight fit between the Work and pipes, sleeves, ducts, conduit, and other penetrations through surfaces.

H. Refinish surfaces to match adjacent finishes. For continuous surfaces, refinish to nearest intersection; for an assembly, refinish entire unit.

I. Identify any hazardous substance or condition exposed during the Work to the ENGINEER.

**PART 2 - PRODUCTS**

NOT USED

**PART 3 - EXECUTION**

NOT USED

**END OF SECTION**

*This page intentionally left blank.*

# SECTION 01780

# CONTRACT CLOSEOUT

## PART 1 - GENERAL

### 1.01 SUBMITTALS

A. Informational Submittals:

1. Submit prior to application for final payment.

a. Written certification that Contract Documents have been reviewed, Work has been inspected, and that the Work is complete in accordance with the Contract Documents and ready for ENGINEER's inspection.

b. Record Documents: As required in General Conditions.

c. Approved Shop Drawings and Samples: As required in General Conditions.

d. Special Bonds, Special Guarantees, and Service Agreements.

e. Consent of Surety to Final Payment: As required in General Conditions.

f. Releases of Waivers of Liens and Claims: As required in General Conditions.

g. Releases from Agreements.

h. Final Application for Payment: Submit in accordance with procedures and requirements stated in **Section 01200 – Measurement and Payment.**

i. Extra Materials: As required by individual specification Sections.

### 1.02 RECORD DOCUMENTS

A. Quality Assurance.

1. Furnish qualified and experienced person, whose duty and responsibility shall be to maintain record documents.

2. Accuracy of Records:

   a. Coordinate changes within record documents, making legible and accurate entries on each sheet of Drawings and other documents where such entry is required to show change.

   b. Purpose of Project record documents is to document factual information regarding aspects of the Work. Both concealed and visible, to enable future modification of the Work to proceed without lengthy and expensive site measurement, investigation, and examination.

3. Make entries within 24 hours after receipt of information that a change in the Work has occurred.

4. Prior to submitting each request for progress payment, request ENGINEER's review and approval of current status of record documents. Failure to properly maintain, update, and submit record documents may result in a deferral by ENGINEER to recommend whole or any part of CONTRACTOR's Application for Payment, either partial or final.

## 1.03 RELEASES FROM AGREEMENTS

A. Furnish OWNER written releases from property owners or public agencies where side agreements or special easements have been made, or where CONTRACTOR's operations have not been kept within the OWNER's construction right-of-way.

B. In the event CONTRACTOR is unable to secure written releases:

1. Inform OWNER of the reasons.

2. OWNER or its representatives will examine the site, and OWNER will direct CONTRACTOR to complete the WORK that may be necessary to satisfy terms of the side agreement or special easement.

3. Should CONTRACTOR refuse to perform this Work, OWNER reserves right to have it done by separate contract and deduct cost of same from Contract Price, or require CONTRACTOR to furnish a satisfactory Bond in a sum to cover legal claims for damages.

4. When OWNER is satisfied that the Work has been complete in agreement with Contract Documents and terms of side agreement or special easement, right is reserved to waive requirement for written release if: (i) CONTRACTOR's failure to obtain such statement is due to grantor's

refusal to sign, and this refusal is not based upon any legitimate claims that CONTRACTOR has failed to fulfill terms of side agreement or special easement, or (ii) CONTRACTOR is unable to contact or has had undue hardship in contacting grantor.

## 1.04 WARRANTIES

A. Provide duplicate notarized copies.

B. Execute and assemble documents from Subcontractors, suppliers and manufacturers.

C. Provide table of contents and assemble in binder with durable plastic cover.

D. Submit prior to the final Application for Payment.

E. For items of work delayed beyond date of Substantial Completion, provide updated submittal within ten days after acceptance, listing date of acceptance as start of warranty period.

F. Provide operation and maintenance documentation.

G. CONTRACTOR shall attend a One-Year Warranty walkthrough and resolve any issues at his own expense.

# PART 2 – PRODUCTS

NOT USED

# PART 3 - EXECUTION

## 3.01 MAINTENANCE OF RECORD DOCUMENTS

A. General:

1. Promptly following commencement of Contract Times, secure from ENGINEER at no cost to CONTRACTOR, one complete set of Contract Documents. Drawings will be full size.

2. Delete ENGINEER title block and seal all documents.

3. Label or stamp record document with title, “RECORD DOCUMENTS,” in neat large printed letters.

4. Record information concurrently with construction progress and within 24 hours after receipt of information that change has occurred. Do not cover or conceal Work until required information is recorded.

5. Submit final Record Drawings in accordance with **Section 01720 – Record Documents**.

B. Preservation:

1. Maintain documents in a clean, dry, legible condition and in good order. Do not use record documents for construction purposes.

2. Make documents and samples available at all times for observation by ENGINEER.

C. Making Entries on Drawings:

1. Using an erasable colored pencil (not ink or indelible pencil), clearly describe change by graphic line and note as required.

   a. Color Coding:
      i. Green when showing information deleted from Drawings.
      ii. Red when showing information added to Drawings.
      iii. Blue and circled in blue to show notes.

2. Date entries.

3. Call attention to entry by "cloud" drawn around area or areas affected.

4. Legibly mark to record actual changes made during construction, including but not limited to:

   a. Depths of various elements of foundation in relation to finished first floor data if not shown or where depth differs from that shown.

   b. Horizontal and vertical locations of existing and new Underground Facilities and appurtenances, and other underground structures, equipment, or Work. Reference to at least two (2) measurements to permanent surface improvements.

   c. Location of internal utilities and appurtenances concealed in the construction referenced to visible and accessible features of the structure.

d. Locate existing facilities, piping, equipment, and items critical to the interface between existing physical conditions or construction and new construction.

e. Changes made by Addenda and Field Orders, Work Change Directive, Change Order, Written Amendment, and ENGINEER's written interpretation and clarification using consistent symbols for each and showing appropriate document tracking number.

5. Dimensions on Schematic Layouts: Show on record drawings, by dimension, the centerline of each run of items such as are described in previous subparagraph above.

a. Clearly identify the item by accurate note such as "cast-iron drain," "galvanized water," and the like.

b. How by symbol or note, vertical location of item ("under slab," "in ceiling plenum," "exposed," and the like).

c. Make identifications so descriptive that it may be related reliably to Specifications.

## 3.02 FINAL CLEANING

A. At completion of the Work or of a part thereof and immediately prior to CONTRACTOR's request for certificate of Substantial Completion; or if no certificate is issued, immediately prior to CONTRACTOR's notice of completion, clean entire site or parts thereof, as applicable.

1. Leave the Work and adjacent areas affected in a cleaned condition satisfactory to OWNER.

2. Remove grease, dirt, dust, paint or plaster splatter, stains, labels, fingerprints, and other foreign materials from exposed surfaces.

3. Repair, patch, and touch up marred surfaces to specified finish and match adjacent surfaces.

4. Clean all windows.

5. Clean and wax wood, vinyl, or painted floors.

6. Broom clean exterior paved driveways and parking areas.

7. Hose clean sidewalks, loading areas, and other areas contiguous with principal structures.

8. Rake clean all other surfaces.

9. Replace air-handling filters and clean ducts, blowers, and coils of ventilation units operated during construction.

10. Leave water courses, gutters, and ditches open and clean.

B. Use only cleaning materials recommended by manufacturer of surfaces to be cleaned.

C. Adjust operating products and equipment to ensure smooth and unhindered operation.

**END OF SECTION**

# SECTION 01810

# EQUIPMENT TESTING AND FACILITY STARTUP

## PART 1- GENERAL

### 1.01 DEFINITIONS

A. Facility: Entire project, or an agreed-upon portion of the project, including all of its unit processes.

B. Functional Test: Test or tests in presence of the ENGINEER and the OWNER to demonstrate that installed equipment meets manufacturer's installation, calibration, and adjustment requirements and other requirements as specified.

C. Performance Test: Test or tests performed after any required functional tests and in the presence of the ENGINEER and the OWNER to demonstrate and confirm individual equipment meets performance requirements specified in the individual specification sections.

D. Unit Process: as used in this Section, a unit process is a portion of the facility that performs a specific process function, such as pumping or treatment.

E. Facility Performance Demonstration:

1. A demonstration, conducted by the CONTRACTOR, with assistance of the OWNER, to demonstrate and document the performance of the entire operating facility, both manually automatically, if required, based on criteria developed in conjunction with the OWNER and as accepted by the ENGINEER.

2. Such a demonstration is for the purposes of (i) verifying to the OWNER the entire facility performs as a whole, and (ii) documenting performance characteristics of complete facility for OWNER's records. Neither the demonstration nor the evaluation is intended in any way to make performance of a unit process or entire facility the responsibility of the CONTRACTOR, unless such performance is otherwise specified.

### 1.02 SUBMITTALS

A. Information Submittals:

1. Facility startup and performance demonstration plan.

2. Functional and performance test results.

3. Start-up check-list and report for approval prior to start-up services are conducted.

4. Completed start-up check-list and report.

## 1.03 FACILITY STARTUP AND PERFORMANCE DEMONSTRATION PLAN

A. Develop a written plan, in conjunction with the OWNER's operating personnel, to include the following:

1. Step-by-step instructions for startup of each unit process and the complete facility.

2. Start-up form to minimally include the following:

a. Description of the unit process, including equipment numbers/nomenclature of each item of equipment and all included devices.

b. Detailed procedure for startup of the unit process, including valves to be opened/closed, order of equipment startup, etc.

c. Startup requirements for each unit process, including water, power, controls, chemicals, etc.

d. Space for evaluation comments.

e. Sequence of unit process startup to achieve facility startup.

f. CONTRACTOR certification that the facility is capable of performing its intended function(s), including fully automatic operations

g. Signature spaces for the CONTRACTOR and the ENGINEER.

## PART 2 - PRODUCTS

NOT USED

## PART 3 - EXECUTION

### 3.01 GENERAL

A. Facility Startup Meetings: Schedule, in accordance with the requirements of **Section 01039 - Coordination and Meetings**, to discuss test schedules, test methods, materials, chemicals and liquids required, facilities operations interface, and OWNER involvement.

B. CONTRACTOR's Testing and Startup Representative:

1. Designate and furnish one or more personnel to coordinate and expedite testing and facility startup.

2. Representative(s) shall be present during startup meetings and shall be available at all times during testing and startup.

C. Provide temporary valves, gauges, piping, test equipment, water, power, fuel, chemicals, laboratory analysis, and other materials and equipment required for testing and startup.

D. Provide adequate subcontract and equipment manufacturer's staff to prevent delays. Schedule ongoing work so as not to interfere with or delay testing and startup.

E. OWNER will:

1. Operate process units and facility with support of CONTRACTOR.

### 3.02 EQUIPMENT TESTING

A. Preparation:

1. Complete installation before testing.

2. Furnish qualified manufacturer's representatives, when required by individual specification sections.

3. Obtain and submit from equipment manufacturer's representative Manufacturer's Certification of Proper Installation Form.

4. Equipment Test Report Form: Provide written test report for each item of equipment to be tested, to include the minimum information:

a. OWNER/Project Name.

b. Equipment or item tested.

c. Date and time of test.

d. Type of test performed (functional or performance).

e. Test method.

f. Test conditions.

g. Test results.

h. Signature spaces for CONTRACTOR and ENGINEER as witness.

5. Cleaning and Checking: Prior to beginning functional testing:

a. Calibrate testing equipment in accordance with manufacturer's instructions.

b. Inspect and clean equipment, devices, connected piping, and structures to ensure they are free of foreign material.

c. Lubricate equipment in accordance with manufacturer's instructions.

d. Turn rotating equipment by hand when possible to confirm that equipment is not bound.

e. Open and close valves by hand and operate other devices to check for binding, interference, or improper functioning.

f. Check power supply to electric-powered equipment for correct voltage.

g. Adjust clearances and torque.

h. Test piping for leaks.

6. Ready-to-test determination will be by ENGINEER based at least on the following:

a. Acceptable Operation and Maintenance Data.

b. Notification by CONTRACTOR of equipment readiness for testing.

c. Receipt of Manufacturer's Certificate of Proper Installation.

d. Receipt and approval of start-up check-list and from.

e. Adequate completion of work adjacent to, or interfacing with, equipment to be tested, including items to be furnished by the OWNER, if any.

f. Availability and acceptability of manufacturer's representative, when specified, to assist in testing of respective equipment.

g. Satisfactory fulfillment of other specified manufacturer's responsibilities.

h. Equipment and electrical tagging complete.

i. Delivery of all spare parts and special tools.

B. Functional Testing:

1. Conduct as specified in individual specification Sections.

2. Notify OWNER and ENGINEER in writing at least 10 days prior to scheduled date of testing.

3. Prepare Equipment Test Report summarizing test method and results.

4. When, in ENGINEER's opinion, equipment meets functional requirements specified, such equipment will be accepted for purposes of advancing to performance testing phase, if so required by individual Specification sections. Such acceptance will be evidenced by ENGINEER/OWNER's signature as witness on Equipment Test Report.

C. Performance Testing:

1. Conduct as specified in individual specification Sections.

2. Notify ENGINEER and OWNER in writing at least 10 days prior to scheduled test date.

3. Performance testing shall not commence until equipment has been accepted by ENGINEER as having satisfied functional test requirements specified.

4. Type of fluid, gas, or solid for testing shall be as specified.

5. Unless otherwise indicated, furnish labor, materials, and supplies for conducting the test and taking samples and performance measurements.

6. Prepare Equipment Test Report summarizing test method and results.

7. When, in ENGINEER's opinion, equipment meets performance requirements specified, such equipment will be accepted as to conforming to Contract requirements. Such acceptance will be evidenced by ENGINEER's signature on Equipment Test Report.

## 3.03 STARTUP OF UNIT PROCESSES

A. Prior to unit process startup, equipment within unit processes shall be accepted by ENGINEER as having met functional and performance testing requirements specified.

B. Startup sequencing of unit processes shall be as chosen by the CONTRACTOR to meet schedule requirements.

C. Make adjustments, repairs, and corrections necessary to complete unit process startup.

D. Startup shall be considered complete when, in the opinion of the ENGINEER, the unit process has operated in the manner intended for five (5) continuous days without significant interruption. This period is in addition to functional or performance test periods specified elsewhere.

E. Significant Interruption: May include any of the following events:

1. Failure of CONTRACTOR to provide and maintain qualified onsite startup personnel as scheduled.

2. Failure to meet specified functional operation for more than two (2) consecutive hours.

3. Failure of any critical equipment or unit process that is not satisfactorily corrected within five (5) hours after failure.

4. Failure of any noncritical equipment or unit process that is not satisfactorily corrected within eight (8) hours after failure.

5. As determined by the ENGINEER.

F. A significant interruption will require startup then in progress to be stopped. After corrections are made, startup test period to start from the beginning again.

## 3.04 FACILITY PERFORMANCE DEMONSTRATION

A. When, in the opinion of the ENGINEER, startup of all unit processes has been achieved, sequence each unit process to the point that the facility is operational.

B. Demonstrate proper operation of required interfaces within and between individual unit processes.

C. After facility is operational, complete performance testing of equipment and system not previously tested.

**END OF SECTION**

*This page intentionally left blank.*

# DIVISION 2

# SITEWORK

# SECTION 02270

# EROSION, SEDIMENTATION AND DUST CONTROL

## PART 1 - GENERAL

### 1.01 DESCRIPTION OF WORK

A. Work consists of control measures as required during the life of the Contract to control erosion, sedimentation and dust.

B. The CONTRACTOR shall establish, construct and maintain erosion and sediment control measures. The erosion control programs shall be maintained during the entire period of construction, including any extensions in Contract time.

C. Temporary erosion and pollution control shall include construction work off-site where such work is necessary as a result of borrow pit operations, haul roads or equipment storage sites, etc.

D. Preparation of the Stormwater Pollution Prevention Plan (SWPPP), including modifications and updates.

E. Obtain and comply with all provisions of the State of Florida, Department of Environmental Protection, Permit for Stormwater Discharge from Large and Small Construction Activities (NPDES Construction Site Permit Program)

### 1.02 REFERENCES

A. Rule 62-40.432, F.A.C.

B. The Florida Development Manual: A Guide to Sound Land and Water Management (DEP, 1988) and any subsequent amendments.

C. 40 CFR Part 122.

D. Chapter 403.0885, F.S.

E. FDOT Standard Specifications for Road and Bridge Construction, Section 104, Latest Edition.

F. State of Florida Department of Environmental Protection Generic permit for Stormwater Discharge from Large and Small Construction Activities – Notice of Termination of Generic Permit Coverage immediately following this Section.

## PART 2 - PRODUCTS

NOT USED

## PART 3 - EXECUTION

### 3.01 PREVENTION, CONTROL AND ABATEMENT OF EROSION AND WATER POLLUTION

A. All work shall be in accordance with the requirements of the State of Florida Department of Environmental Protection under Chapter 62-621, F.A.C. or Chapter 62-620, F.A.C.

B. The CONTRACTOR shall provide for and be responsible for the prevention, control and abatement of erosion and water pollution until completion and acceptance of the Project. The CONTRACTOR shall provide all temporary erosion control features necessary to prevent, control and abate erosion and water pollution, and shall prepare and submit as the operator and permittee, along with the applicable application fee, the "Notice of Intent to Use Generic Permit for Stormwater Discharge from Large and Small Construction Activities" (NOI) prior to commencing construction and the "Notice of Termination" (NOT) upon final completion of construction. The CONTRACTOR, as required by the NPDES permit program, shall prepare a stormwater pollution prevention plan (SWPPP). This SWPPP shall be modified and updated by the CONTRACTOR as necessary, to meet the requirements of the NPDES permit issued, at no additional cost to the OWNER. The CONTRACTOR shall also comply with the inspections, maintenance, reporting and all other provisions of the NPDES permitting program, and the cost for the compliance with this program is to be included in the CONTRACTOR bid price for the work.

C. During the construction of the Project, the CONTRACTOR shall comply with the Water Quality Standards of the EPA and the State of Florida.

D. The CONTRACTOR shall meet and be responsible for the requirements of all applicable governing agencies regarding prevention, control and abatement of erosion and water pollution.

### 3.02 DAMAGE TO WATER DETENTION AND DRAINAGE AREAS

A. The CONTRACTOR shall be responsible for the prevention of damage to detention ponds, holding areas, drainage canals or natural waterways, and wetlands (both on and off site).

B. The CONTRACTOR shall act as directed to correct said damage as quickly as possible and take necessary steps to prevent future damage. The CONTRACTOR

shall notify the ENGINEER of said damage.

C. The cost of correction of damage shall be at no cost to the OWNER or his agents.

## 3.03 DUST CONTROL

A. The CONTRACTOR shall exercise precautionary measures to minimize dust emissions as necessary, which may include, but shall not be limited to, periodic sprinkling or wetting of the site, and shall modify measures to be implemented, as necessary, to satisfy jurisdictional agency requirements including but not limited to Palm Beach County and the Palm Beach County Health Department (Air Pollution Division) at no additional expense to the OWNER.

**END OF SECTION**

*This page intentionally left blank.*

# SECTION 02820

# CHAIN LINK FENCE

## PART 1 - GENERAL

### 1.01 DESCRIPTION

This work consists of all labor, materials, and equipment necessary for furnishing and installing chain link fence, gates, temporary fencing and screening, and accessories in conformance with the specifications, drawings, and details.

### 1.02 RELATED SECTIONS

A. All of Division 1.

B. **Section 02210 – Grading.**

C. **Section 03700 – Concrete Work**.

### 1.03 REFERENCES

A. ASTM F668, Standard Specification for PVC-Coated Steel Chain Link Fence Fabric.

B. ASTM F900, Standard Specification for Industrial and commercial Swing Gates.

C. ASTM F1083, Standard Specification for Pipe, Steel, Hot-Dipped Zinc-Coated .Welded for Fence Structures.

D. ASTM F567, Standard Practice for Installation of Chain-Link Fences.

E. ASTM F626 Standard Specification for Fence Fittings.

### 1.04 SUBMITTALS

A. Submit manufacturer's data for fabric, posts, gates, and all other materials, finishes, and appurtenances.

B. Submit shop drawing showing dimensions of materials and layout of posts and gates.

C. Submit temporary fencing and screening plan.

## PART 2 - PRODUCTS

### 2.01 GENERAL

A. Match, style, finish, and color of each fence component with that of other fence components. All fence components shall be black, PVC coated.

### 2.02 CHAIN LINK FENCE FABRIC

A. Fence fabric shall be black, PVC coated galvanized fabric conforming to STM F668, Class 1 or 2a with a minimum thickness of five (5) mm.

B. Fence height shall be 96 inches.

C. Core wire gauge shall be No. 9 prior to vinyl coating.

D. Link patter shall be two (2) inch diamond mesh.

E. Loops of knuckled selvages shall be closed or nearly closed with space not exceeding diameter of wire

F. Wires of twisted selvages shall be twisted in a closed helix three full turns and cut at an angle to provide sharp barbs that extend a minimum of ¼-inch beyond the twist.

G. Fencing shall be slatted.

### 2.03 POSTS

A. Strength and stiffness requirements shall meet ASTM F1043, except as modified in this section. The steel shall meet the requirements of ASTM F1083.

B. The post length shall be the manufacturer's standard with an allowance for a minimum of 36 inches of embedment below finished grade.

C. Protective coating shall be a zinc coating applied to the internal and external portions of the post meeting the requirements of ASTM F1043, Type A.

D. Color coating shall be applied over the zinc coating a minimum of 10 mils in thickness and matching the color of the chain link fabric.

E. Line posts shall have an outside diameter of 2½-inches and a minimum weight of 2.96 pounds per foot.

F. End, corner, angle, and pull posts shall have an outside diameter of three (3) inches and a minimum weight of 4.69 pounds per foot.

G. Gates posts shall have an outside diameter of four (4) inches and a minimum weight of 4.85 pounds per foot.

## 2.04 TOP RAILS AND BRACE RAILS

A. Rails shall be manufactured from galvanized steel pipe.

B. The protective coating and color coating shall match the coating applied to the posts.

C. The rails shall have an outside diameter of 1⅝ and a minimum weight of 2.27 pounds per foot.

## 2.05 FENCE FITTINGS

A. Post and line caps shall be designed to accommodate passage of top rail through cap.

B. The protective coating and color coating shall match the coating applied to the posts.

C. Tension and brace bands shall be vinyl clad.

D. Truss rods assemblies shall be ⅜-inches in diameter.

## 2.06 TENSION WIRE

A. Tension wire shall be zinc-coated steel marcelled tension wire confirming to ASTM A824, Type II, Class 2.

B. The protective coating and color coating shall match the coating applied to the posts.

## 2.07 GATES

A. Gates shall have welded steel joints with coated with zinc-based paint.

B. The protective coating and color coating shall match the coating applied to the posts.

C. The chain link fabric shall be attached to the gate frame a maximum of every 15 inches.

## 2.08 PVC VERTICAL SLATS

A. The slats shall be black in color, made of UV-resistant PVC, and installed vertically the entire height of the fence.

## 2.08 TEMPORARY FENCING AND SCREENING

A. Fence height shall be 72 inches.

B. Temporary screening shall be provided with temporary fencing and may consist of non-transparent fabric or PVC vertical slats which provide a visual barrier of all fenced area.

C. Signage shall be provided and attached to temporary fencing and shall include project emergency contact information.

## PART 3 - EXECUTION

### 3.01 GENERAL

A. Install chain link fences and gates in accordance with ASTM F567, except as modified in this Section.

B. Provide necessary hardware for a complete fence and gate system.

### 3.02 POST SETTING

A. Driven posts are not acceptable.

B. Post hole depth shall be a minimum of three feet below finished grade.

C. Post holes shall be backfilled with concrete to two (2) inches above finished grade. The concrete shall have a crown to divert water away from the post. Where posts come in contact with concrete, they shall be coated with Koppers 300M or approved equal.

### 3.03 GATE INSTALLATION

A. Hang gates and adjust hardware so gates operate satisfactorily from both the open and closed positions and all latches operate freely.

### 3.04 FIELD QUALITY CONTROL

A. Demonstrate to the ENGINEER proper operation of the gates from both the open and closed position prior to final acceptance.

**END OF SECTION**

# SECTION 02936

# SODDING

## PART 1 - GENERAL

### 1.01 PERFORMANCE

A. Section generally defines CONTRACTOR's responsibilities, unless otherwise indicated for the following:

1. Preparation of subsoil.

2. Placing topsoil.

3. Fertilizing.

4. Sod installation.

5. Maintenance.

### 1.02 RELATED SECTIONS

A. All of Division 1.

B. **Section 02210 – Grading.**

### 1.03 REFERENCES

A. FDOT - Florida Department of Transportation - Standard Specifications for Road and Bridge, Latest Edition.

### 1.04 QUALITY ASSURANCE

A. Sod Producer: Company specializing in sod production and harvesting with a minimum five (5) years of experience and certified by the State of Florida.

B. Installer: Company approved by the sod producer.

C. Sod: Minimum age of 18 months, with root development that will support its own weight, without tearing, when suspended vertically by holding the upper two (2) corners.

D. Submit sod certification for grass species and location of sod source.

E. The ENGINEER reserves the right to test, reject or approve all materials before application.

## 1.05 REGULATORY REQUIREMENTS

A. Comply with regulatory agencies for fertilizer.

## 1.06 DELIVERY, STORAGE, AND HANDLING

A. Deliver products to site under provisions of **Section 01600 – Material and Equipment.**

B. Store and protect products under provisions of **Section 01600 – Material and Equipment.**

C. Deliver sod on pallets. Protect exposed roots from dehydration.

D. Do not deliver more sod than can be laid within 48 hours.

E. Deliver fertilizer in waterproof bags showing weight, chemical analysis, and name of manufacturer.

F. The CONTRACTOR shall furnish the ENGINEER invoices of all materials received in order that the minimum application rate of materials may be determined.

## 1.07 MAINTENANCE SERVICE

A. Maintain sodded areas immediately after placement until grass is well established and exhibits a vigorous growing condition.

# PART 2 - PRODUCTS

## 2.01 MATERIALS

A. Sod:

1. Sod shall be ASPA approved grade, Argentine Bahia, Tifton Bermuda, Floritam, or St. Augustine to match existing or better as directed, with firm texture having a compacted growth and good root development.

2. Sod shall be absolutely true to varietal type, and free from weeds or other objectionable vegetation, fungus, insects and disease of any kind.

3. Cut sod in area not exceeding 24 inches by 24 inches with minimum one inch and maximum three inch of topsoil base.

4. The sod shall be planted as soon as possible after being harvested and shall be shaded and kept moist from the time of harvesting to the time it is planted.

B. Topsoil:

1. Excavated from site and free of weeds.

2. Topsoil to be minimum three (3) inches thick.

C. Fertilizer:

1. In accordance with FDOT 982-1.

D. Water:

1. Clean, fresh, and free of substances or matter, which could inhibit vigorous growth of grass.

## PART 3 - EXECUTION

### 3.01 INSPECTION

A. Verify that prepared subsoil is ready to receive the work of this Section.

### 3.02 FERTILIZING

A. Apply fertilizer in accordance with manufacturer's instructions.

B. Apply after smooth raking of topsoil and prior to installation of sod.

C. Apply fertilizer no more than 48 hours before laying sod.

D. Mix thoroughly into upper two (2) inches of topsoil.

E. Lightly water to aid the dissipation of fertilizer.

### 3.03 LAYING SOD

A. Moisten prepared surface immediately prior to laying sod.

B. Lay sod tight with no open joints visible, and no overlapping; stagger end joints 12 inches minimum. Do not stretch or overlap sod pieces.

C. Stake sod with 1x2 stakes on all areas with slopes greater than one (1) vertical to five (5) horizontal.

D. Coordinate sod installation with irrigation system components.

## 3.04 MAINTENANCE

A. Water to prevent grass and soil from drying out.

B. Immediately replace sod in areas, which show deterioration or bare spots.

## 3.05 APPROXIMATE AREA TO BE SODDED

A. All construction areas disturbed by construction of the project except those areas receiving pavement or rock. CONTRACTOR is to take into account his anticipated ditch width and pit sizes at the surface when accounting for the cost of this work.

**END OF SECTION**

# DIVISION 3

# WELL CONSTRUCTION AND CONCRETE WORK

# SECTION 03700

# CONCRETE WORK

## PART 1 - GENERAL

### 1.01 DESCRIPTION OF WORK

A. This section includes all cast-in-place, steel reinforced and pre-cast concrete work as shown on the drawings and described within these specifications.

B. The CONTRACTOR shall furnish all labor, materials, equipment and incidentals required to perform all cast-in-place concrete work, complete and in place.

C. The CONTRACTOR shall be responsible for providing a steel reinforced concrete pad design for the generator(s) which has been signed and sealed by a Professional Engineer licensed in the state of Florida. Design shall include the anchors for the generator to the concrete pad and shall meet the requirements of the Florida Building Code (2017). Refer to Section 16203.

### 1.02 QUALITY ASSURANCE

A. Codes and Standards: Comply with the provisions of the following codes, specifications and standards, except where more stringent requirements are shown or specified:

B. ACI 301 "Specifications for Structural Concrete for Buildings".

C. ACI 318 "Building Code Requirements for Reinforced Concrete".

D. ACI 347 "Recommended Practice for Concrete Formwork".

E. Concrete Reinforcing Steel Institute, "Manual of Standard Practice".

F. Workmanship: The CONTRACTOR is responsible for correction of concrete work which does not conform to the specified requirements, including strength, tolerances, and finishes. Correct deficient concrete as directed by the ENGINEER.

G. Concrete Testing Service: CONTRACTOR shall employ a testing laboratory for material evaluation tests and to perform sampling and testing of concrete during placement.

H. Tests, not specifically indicated to be done at the OWNER's expense, including the retesting of rejected materials and installed work, shall be done at the CONTRACTOR's expense.

I. Quality Control Testing During Construction:

1. Testing laboratory shall sample and test concrete for quality control during the placement of concrete as required by the drawings and specifications.

2. Test results will be reported in writing to the ENGINEER and the CONTRACTOR on the same day that tests are made.

3. Additional Tests: The testing service will make additional tests of in-place concrete when test results indicate the specified concrete strengths and other characteristics have not been attained in the structure, as directed by the ENGINEER. The testing service may conduct tests to determine adequacy of concrete by cored cylinders complying with ASTM C-42, or by other methods as directed. CONTRACTOR shall pay for such tests conducted, and any other additional testing as may be required, when unacceptable concrete is verified.

## PART 2 - PRODUCTS

### 2.01 FORM MATERIALS

A. Forms: Unless otherwise shown or specified, construct formwork for exposed concrete surfaces with plywood, metal, metal-framed plywood faced or other acceptable panel type materials, to provide continuous, straight, smooth, exposed surfaces.

B. For Coatings: Provide commercial formulation form coating compounds that will not bond with, stain nor adversely affect concrete surfaces, and will not impair subsequent treatments of concrete surfaces to be cured with water or curing compound.

### 2.02 REINFORCING MATERIALS

A. Reinforcing Bar: ASTM A-615, Grade 60 deformed, free from oil, scale and rust and placed in accordance with the typical bending diagram and placing details of ACI standards and specifications.

B. Steel Wire: ASTM A-82, plain, cold-drawn steel, free from oil, scale and rust and placed in accordance with the typical placing details of ACI standards and specifications. Minimum lap shall be one space plus two (2) inches.

C. Welded Wire Fabric: ASTM A-185, flat mat welded steel wire fabric.

D. Supports for Reinforcement: Use wire bar type supports complying with CRSI recommendations, unless otherwise indicated. Wood, brick and other devices will not be acceptable.

## 2.03 CONCRETE MATERIALS

A. Portland Cement: ASTM C-150, Type I/II unless otherwise acceptable to ENGINEER.

B. Normal Weight Aggregates: ASTM C-33, and as herein specified. Provide aggregates from a single source for all exposed concrete.

C. Fine Aggregate: Clean, sharp, natural sand free from loam, clay, lumps or other deleterious substances.

D. Maximum Aggregate Size: Not larger than one (1) inches, nor ¾ of the minimum clear spacing between individual reinforcing bars or bundles of bars, except when approved otherwise by ENGINEER.

E. Water: Clean, fresh, and potable.

F. Air-Entraining Admixture: ASTM C-260.

G. Calcium Chloride: Calcium chloride for admixtures shall not be permitted.

H. Moisture Barrier: Polyethylene sheet not less than six (6) mils thick, ASTM E-154.

I. Moisture Retaining Cover: One (1) of the following complying with ASTM C-171.

1. Waterproof paper.

2. Polyethylene film.

3. Polyethylene coated burlap.

J. Membrane Forming Curing Compound: ASTM C-309 clear, unless other type acceptable to the ENGINEER.

K. Curing and Sealing Type: (For Horizontal Surfaces).

1. Dress and Seal: L & M Construction Chemicals.

2. Super Floor Coat: The Euclid Chemical Co.

3. Masterseal 66: Master Builders

4. DeKote 800: W.R. Grace & Co.

5. Kure-N-Seal 0800: Sonneborn/Contech.

L. Moisture Barrier: Provide six (6) mil polyethylene sheet, resistant to decay when tested in accordance with ASTM E-154.

## 2.04 PROPORTIONING AND DESIGN OF MIXES

A. Concrete shall be an approved mix design proportions to achieve a strength at 28 days of 4,000 psi with a plastic and workable mix. Water to cement ratio shall be 0.45 max. and slump range shall be 3.5" to 5".

B. Prepare design mixes for each type and strength of concrete in accordance with applicable provisions of ASTM C-94.

C. Proportion mixes by either laboratory trial batch or field experience methods, using materials to be employed on the project for each class of concrete required, complying with ACI 211.1.

D. Submit written reports to the ENGINEER of each proposed mix for each class of concrete at least 15 days prior to start of work. A number or code unique to that mix shall identify each mix design.

E. Design mixes to provide normal weight concrete with the 28 day psi compressive strength as indicated on drawings and within these specifications.

F. Admixtures: Use air entraining admixture in all exterior exposed concrete, unless otherwise indicated. Add air entraining admixture at the Manufacturer's prescribed rate to result in concrete at the point of placement having air content within the following limits:

1. All concrete three (3) percent to five (5) percent unless otherwise approved by ENGINEER.

G. Use admixtures for water reducing and set control (with written permission of ENGINEER).

## 2.05 CONCRETE MIXING

A. Ready-Mix Concrete: Comply with the requirements of ASTM C-94 and as herein specified.

## 2.06 CONCRETE TESTING

A. An independent testing laboratory shall perform the following tests on cast-in-place concrete.

1. Standard Test Method for slump of Portland cement concrete in accordance to ASTM C143.

2. Standard Test Method for compressive strength of cylindrical concrete specimens in accordance to ASTM C39.

B. A separate test shall be conducted for each class of concrete and for every 50 cubic yards (or fraction thereof), placed per day.

C. Required cylinder(s) quantities and test age are as follows:

1. 1 at 7 days.

2. 2 at 28 days.

3. 1 hold cylinder.

## 2.07 CHEMICAL ANCHORS

A. Chemical anchors shall be an epoxy polymer injection system, installed in accordance with the Manufacturer's instructions. Installers shall be trained by the Manufacturer's representative.

## 2.08 PRE-MOLDED EXPANSION JOINT MATERIAL AND SEALANT

A. Sealant material shall be Sonolastic NP-1 or Sikaflex-15 LM, or approved equal. Apply in strict conformance to manufacturer's instructions. Maximum depth, ½-inch.

B. Expansion joint material shall be resilient, non-extruding type premolded impregnated fiberboard complying with ASTM D-1751, FSHN-F-341, Type I and AASHTO M213.

C. Plumbing sleeves: Minimum sleeve spacing shall be two diameters, center to center of the larger sleeve or six (6) inches clear between sleeves, whichever is greater.

## PART 3 - EXECUTION

### 3.01 GENERAL

A. Construct forms complying with ACI 347 to sizes, shapes, lines, and dimensions shown and to obtain accurate alignment, location, grades, level, and plumb work in finished structures.

B. Unless otherwise shown, Chamfer exposed corners and edges ¾-inches, using wood, metal, PVC, or rubber chamfer strips fabricated to produce uniform smooth lines and tight edge joints.

C. Form Ties: Factory fabricated, adjustable length, removable or snap off metal form ties, designed to prevent form deflection, and to prevent spalling concrete surfaces upon removal.

### 3.02 PLACING REINFORCEMENT

A. Accurately position, support and secure reinforcement against displacement by formwork, construction, or concrete placement operations. Locate and support reinforcing by metal chairs, runners, bolsters, spacers, and hangers, as required. Comply with ACI 301 and 318.

### 3.03 JOINTS

A. Construction Joints: Locate and install construction joints, which are not shown on the drawings, so as not to impair the strength and appearance of the structure, as acceptable to the ENGINEER.

B. Place construction joints as indicated on the structural drawings.

C. Isolation Joints in Slabs-On-Grade: Construct isolation joints at all points of contact between slabs on ground and vertical surfaces where shown on the structural drawings.

D. Control Joints in Slabs-on-Grade: Construct control joints in slabs-on-ground to form panels of patterns as shown. See typical detail on structural drawings.

E. Saw cuts shall be made as soon as possible after final troweling without dislodging aggregate, normally 12 hours.

F. Expansion Joints: Provide expansion joints as shown. Install premolded filler as specified.

## 3.04 INSTALLATION OF EMBEDDED ITEMS

A. General: Set and build into the work anchorage devices and other embedded items required for other work that is attached to, or supported by, cast-in-place concrete. Use setting drawings, diagrams, instructions, and directions provided by suppliers of the items to be attached thereto.

B. No penetrations shall be made in any structural members other than those located on these drawings without previous approval of the ENGINEER.

## 3.05 PREPARATION OF FORM SURFACES

A. Coat the contact surfaces of forms with a non-staining form coating compound before reinforcement is placed.

## 3.06 CONCRETE PLACEMENT

A. General: Comply with ACI 304 and as herein specified. Subgrades shall be inspected and approved before concrete is placed for concrete poured on grade. Forms and reinforcing shall be inspected and approved prior to concrete placement.

B. Consolidate placed concrete by mechanical vibrating equipment supplemented by hand spading, rodding or tamping. Use equipment and procedures for consolidation of concrete in accordance with the recommended practices of ACI 309, to suit the type of concrete and project conditions. The use of vibrators or other mechanical devices to move the concrete in the forms is not permitted. Concrete shall be deposited as near its final location as practical.

C. Hot Weather Placing: When hot weather conditions exist that would seriously impair the quality and strength of concrete, place concrete in compliance with ACI 305.

## 3.07 FINISH OF FORMED SURFACES

A. Rough Form Finish: For formed concrete surfaces not exposed to view in the finish work or by other construction, unless otherwise indicated. This is the concrete surface having the texture imparted by the form facing material used, with tie holes and defective areas repaired and patched and fins and other projections exceeding ¼-inches in height chipped off, defective areas, honeycomb and tie holes filled and repaired with cement grout.

B. Smooth Form Finish: For formed concrete surfaces exposed to view, or that area to be covered with a coating material applied directly to the concrete, or a covering material bonded to the concrete, such as waterproofing, damp-proofing, painting, or other similar system, to have the as-cast concrete surface obtained with selected form facing material, arranged orderly and symmetrically with a minimum of

seams. Repair and patch defective areas with all fins or other projections completely removed and smoothed, and all tie rod holes grouted flush, all honeycomb cut out and patched with grout.

C. Related Unformed Surfaces: At tops of walls, horizontal offsets and similar unformed surfaces occurring adjacent to formed surfaces, strike-off smooth and finish with a texture matching adjacent formed surfaces. Continue final surface treatment of formed surfaces uniformly across adjacent unformed surfaces, unless otherwise shown.

## 3.08 MONOLITHIC SLAB FINISHES

A. General: Comply with ACI 301 for the specified finish specification and methods. The use of jitterbugs for finishing slabs will not be permitted.

## 3.09 TYPE OF FINISHES AND TOLERANCES

A. Trowel Finish: For floors intended as walking surfaces or for reception of floor coverings. Class by tolerance 5/16 inches in 10'-0", ⅜-inches in 20'-0", and +/- ¾-inches total building.

B. Broom or Belt Finish: For sidewalks, steps, platforms, and ramps. Class by tolerance (5/16 inches 10'-0").

## 3.10 MOISTURE BARRIER

A. Where a moisture barrier is shown under concrete slabs on grade, install six (6) mil thick polyethylene sheets, with joints lapped and taped. Place moisture barrier three (3) inches below bottom elevation of slab, and place a three (3) inches thick, clean, sand bed over moisture barrier for slab placement.

## 3.11 CONCRETE CURING, SEALING AND PROTECTION

A. Start initial curing as soon as free water has disappeared from concrete surface after placing and finishing. Weather permitting, keep continuously moist for not less than 72 hours.

B. Begin final curing procedures immediately following initial curing and before concrete has dried. Continue final curing for at least seven (7) days in accordance with ACI 301 procedures. Avoid rapid drying through the end of final curing period.

C. Curing Methods: Perform curing of concrete by moisture retaining cover curing, by membrane curing, and by combinations thereof, as herein specified.

1. Provide Moisture Cover Curing as follows: Cover concrete surfaces with moisture retaining cover for curing concrete, placed in widest practicable width with sides and ends lapped at least three (3) inches and sealed by waterproof tape or adhesive. Immediately repair any holes or tears during curing period using cover material and waterproof tape.

2. Provide Membrane Curing to Slabs as Follows:

   a. Apply membrane forming curing compound to concrete surfaces as soon as final finishing operations are complete (within two [2] hours). Apply uniformly in continuous operation by power spray or roller in accordance with manufacturer's directions. Recoat areas, which are subjected to heavy rainfall within three (3) hours after initial application. Maintain continuity of coating and repair damage during curing period.

   b. Curing Formed Surfaces: Cure formed concrete surfaces by moist curing with forms in place for full curing period or until forms are removed. If forms are removed, continue curing by methods specified above, as applicable.

   c. Sealing Concrete Floors: Clean surfaces of all foreign material, oil and grease. Apply an additional coat of cure and seal material, same as used to cure concrete surfaces to all floors not receiving other finish. Apply at rate recommended by manufacturer.

## 3.12 REMOVAL OF FORMS

A. Comply with ACI 301 and 318 and structural notes for removal of forms.

## 3.13 CONCRETE SURFACE REPAIRS

A. Patching Defective Areas: Repair and patch defective areas with cement mortar immediately after removal of forms, but only when acceptable to ENGINEER.

**END OF SECTION**

*This page intentionally left blank.*

# DIVISION 16

# ELECTRICAL

# SECTION 16000

# ELECTRICAL GENERAL REQUIREMENTS

## PART 1 GENERAL

1.01 RELATED DOCUMENTS

A. The general provisions of the Contract, including General Conditions, apply to all the Work specified in the Electrical 16000 Sections.

1.02 LAWS, PERMITS, FEES AND NOTICES

A. Secure and pay all permits, fees and licenses necessary for the proper execution of the Work. Submit all notices and comply with all laws, ordinances, rules and regulations of any public agency bearing on the Work. CONTRACTOR shall be licensed Electrical CONTRACTOR in the county of construction.

1.03 DEPARTURES

A. If any departures from the Contract drawings or specifications are deemed necessary, details of such departures and the reasons therefore shall be submitted to the ENGINEER for advance written approval, prior to departure.

1.04 GUARANTEES

A. Furnish written guarantee covering all materials, workmanship, labor and equipment for a period of one (1) year from the date of acceptance as described in the Contract General Conditions.

B. The OWNER reserves the right to operate and use all materials and equipment failing to meet the requirements of the Contract documents until such unacceptable materials and equipment are replaced or repaired to the satisfaction of the ENGINEER.

1.05 AS-BUILT INFORMATION

A. A set of “red-lined” electrical drawings shall be carefully maintained at the job site. Actual conditions are to be put on the drawings in red on a daily basis so the drawings will continuously show locations and routes of cable trays, conduits, pull-boxes, circuit numbers, and other information required by the ENGINEER.

1.06 JOB SITE VISIT

A. Visit the project site before submitting a bid. Verify all dimensions shown and determine the characteristics of existing facilities which will affect performance of the Work, but which may not be shown on drawings or described within these specifications.

1.07 CLEANUP

A. Maintain a continuous cleanup during the progress of the Work and use appointed storage areas for supplies. The premises shall be kept free from accumulations of waste materials and rubbish.

1.08 CUTTING AND PATCHING

A. Cut and prepare all openings, chases and trenches required for the installation of equipment and materials. Repair, remodel and finish in strict conformance with the quality of workmanship and materials in the surroundings. Obtain written permission from the ENGINEER for any alterations to structural members before proceeding.

1.09 MAINTENANCE

A. Render all necessary measures to ensure complete protection and maintenance of all systems, materials and equipment prior to final acceptance. Any materials or equipment not properly maintained or protected to assure a factory new condition at the time of final acceptance shall be replaced immediately at no additional cost to the OWNER.

1.10 WATERPROOFING

A. Whenever any Work penetrates any waterproofing, seal and render the Work waterproof. All Work shall be accomplished so as not to void or diminish any waterproofing bond or guarantee.

1.11 TESTS

A. Conduct an operating test of equipment prior to the ENGINEER's approval. The equipment shall be demonstrated to operate in accordance with the requirements of these specifications. The tests shall be performed in the presence of the ENGINEER or an authorized representative. The electrical CONTRACTOR shall furnish all instruments, electricity and personnel required for the tests.

## 1.12 POWER SHUT DOWNS COORDINATION

A. CONTRACTOR shall coordinate at well sites and especially at lift station site any power shut downs to the station and control panel. All power shut downs shall be kept to a minimum, and in the case of the lift station bypass pumping may be necessary during any extended power outage.

## 1.13 SUMMARY OF ELECTRICAL WORK

A. Provide all labor, materials, tools, supplies, equipment and temporary utilities to complete the Work shown on the drawings and specified herein. All systems are to be completely installed and fully operational. Specifically, the Work includes, but is not necessarily limited to:

1. Provide demolition of existing raceway and wires from main disconnect to the existing control panel. Reuse the existing service, meter, main, control panel, raceways, pipe stand, and the like, see drawings and other specifications for other information.

2. Coordinate demolition work with the Owner.

3. Provide new raceway, wireway with Polaris taps, and conductors as called out on drawings.

4. Provide and install all the electrical equipment, equipment racks, panels, step down transformer, raceways, terminal boxes, power and control wiring.

5. Provide and install outdoor generator on generator pad, and ATS equipment. Generator with sub-base fuel tank. Generator shall be properly bolted down into generator concrete slab and isolation rubber pads, 1/2” thick minimum shall be used at each tiedown or bolting point to isolate the generator bottom (fuel tank) from slab and humidity and water to prevent corrosion of tank.

6. Provide grounding of the equipment.

7. Provide testing and startup of the pump station equipment, including the ATS and generator.

8. At lift station and well sites equipped with RTU equipment, provide raceway and wiring for status and alarms of proposed ATS switch and generator equipment from existing RTU equipment. See drawings. Coordinate with Owner’s RTU programmer to add these signals to RTU.

9. Provide all as-built to the drawings and closing documents.

## 1.14 CODES AND STANDARDS

A. General Applicable provisions of the following codes and standards and other codes and standards required by the State of Florida and local jurisdictions are hereby imposed on a general basis for electrical Work (in addition to specific applications specified by individual Work sections of these specifications):

1. U.L.: Electrical materials shall be approved by Underwriters' Laboratories, Inc. This applies to materials which are covered by U.L. standards. Factory applied labels are required.

2. National Electrical Code.

3. OSHA: Standards of the Occupational Safety and Health Administration are to be complied with.

4. NEMA: National Electrical Manufacturers Association Standards are to be met wherever standards have been established by that agency and proof is specifically required with material submittals for switchboards, motor control centers, panelboards, cable trays, motors, switches, circuit breakers and fuses.

5. ANSI: America National Standards Institute

6. NESC: National Electrical Safety Code

7. Any and all local codes.

## 1.15 ELECTRICAL TEMPORARY FACILITIES

A. The electrical CONTRACTOR shall include in his bid the cost of furnishing, installing, maintaining and removing all materials and equipment required to provide temporary light and power to perform his Work during construction and until Work is completed.

B. Safety

1. All reasonable safety requirements shall be observed to protect workers and the public from shock and fire hazards. Ground fault interrupters shall be employed in accordance with codes.

2. Ground wires are required in all circuits. Ground poles are required on all outlets. All metallic cases shall be grounded.

3. Raintight cabinets shall be used for all equipment employed in wet areas.

1.16 EXCAVATING FOR ELECTRICAL WORK

A. General – Not needed

1.17 ELECTRICAL SUBMITTALS

A. Submittals for Approval

1. Refer to Contract General Conditions for additional instructions on the General Conditions and this section, the more stringent requirements shall apply.

2. Shop Drawings and Manufacturer's data sheets are required for all electrical materials.

3. Submittals will not be accepted for partial systems. Submit all materials for each specification section at one time. Submittals must be arranged, correlated, indexed and bound in orderly sets for ease of review.

4. Samples are to be supplied for any substitute as requested by the ENGINEER.

5. The following numbers of copies are required:

| | |
|---|---|
| Shop drawings | 6 sets |
| Samples | 1 each |
| Manufacturer's data | 6 sets |
| Certifications | 6 sets |
| Test reports | 6 sets |
| Warranties/Guarantees | 6 sets |

6. Submit shop drawings, Manufacturer's data and certifications on all items of electrical Work prior to the time such equipment and materials are to be ordered. Order no equipment or materials without approval from the ENGINEER. Submittals will not be accepted for partial system submittals; submit all data at one time. Submittals will be promptly returned, approved, approved as noted, or not approved. Items "approved as noted" must be changed to comply with the ENGINEER's comments and need not be resubmitted for "approved" status.

Items “not approved” are not suitable, requiring complete new submittals.

7. Time delays caused by rejection of submittals are not cause for extra charges to OWNER or time extensions. CONTRACTOR shall be responsible for investigating existing systems or shop drawings in order to fully integrate the new equipment into the system. Adequate shop drawings may or may not exist for all existing systems.

B. Operation and Maintenance Manuals

1. Submit to the ENGINEER five (5) copies of all Manufacturer’s service installation and operation manuals, instructions and bulletins. These manuals shall be subject to review of the ENGINEER. If acceptable they shall be forwarded to the OWNER. If not acceptable they shall be returned to the CONTRACTOR for revision and resubmittal. Manuals shall contain, but not be limited to, the following:

a. Brief description of system and basic features.

b. Manufacturer’s name and model number for all components in the system.

c. List of local factory authorized service companies.

d. Operating instructions.

e. Maintenance instructions

f. Trouble shooting instructions

g. Manufacturer’s literature describing each piece of equipment.

h. Power and control wiring diagrams

i. Parts lists

1.18 ELECTRICAL PRODUCTS

A. Standards Products

1. Unless otherwise indicated in writing by the ENGINEER, the products to be furnished under this specification shall be the Manufacturer’s latest design. Units of equipment and components of the same purpose and rating shall be

interchangeable throughout the project. All products shall be newly manufactured. Defective equipment or equipment damaged in the course of installation or test, shall be replaced or repaired in a manner meeting with the approval of the ENGINEER at no additional expense to the OWNER.

B. Delivery, Storage and Handling

1. Deliver products to project properly identified with names, model numbers, types, grades, compliance labels and similar information needed for distinct identification; adequately packaged or protected to prevent deterioration during shipment, storage and handling. Store in a dry, well ventilated, indoor space, except where prepared and protected by the Manufacturer specifically for exterior instructions for storage locations.

C. Substitutions

1. Comply with instructions in the Contract General Conditions and Special Conditions and obtain pre-approval of the ENGINEER regarding substitutions.

1.19 SKILLED ELECTRICAL CRAFTSMEN

A. CONTRACTOR shall employ and staff the project with skilled Craftsmen experienced in the project requirements.

B. As a minimum, a Licensed Journeyman Electrician shall be present on the project at all times.

C. Other skilled persons shall be present as the project requirements dictate including Manufacturers representatives, start-up technicians, ENGINEERs, etc.

1.20 DRAWINGS AND SPECIFICATIONS

A. Refer to the drawings for additional requirements. There are requirements indicated on the drawings which are not indicated in the specification.

B. Bidders, suppliers, equipment vendors, General CONTRACTOR, Sub Contractors and other similar entities are required to read all the Contract documents including drawings and specifications.

1.21 SCHEMATIC NATURE

A. Plan views are schematic in nature and meant to show the schematic arrangement of equipment and conduit.

B. CONTRACTOR shall provide the OWNER/ENGINEER with an 11 x 17 (min) drawing (to scale) of the final layout of the equipment and conduit routing for approval. This drawing shall include measurements for all NEC required clearances and separations for equipment and conduit. Refer to other spec sections for conduit routing requirements.

1.22 APPROVED SHOP DRAWINGS

A. Use approved shop drawings for lay out of equipment. The Contract documents will vary from the shop drawings. Inform the ENGINEER immediately if there are lay out issues or inadequate space for equipment or clearances. Land conduits in openings of enclosures per the approved shop drawings, do not use the Contract drawings.

B. Housekeeping pads, equipment racks and the like shall be based on the approved shop drawings.

1.23 CLEARANCES

A. It shall be the CONTRACTOR's responsibility to meet N.E.C. clearances about equipment.

1.24 ROUTING

A. Conduit routing is schematic in nature. Conduit routing is shown for clarity on the Contract drawings. See other spec sections for additional conduit routing requirements.

1.25 FUTURE FACILITIES

A. Where future facilities are indicated, conduit routing shall account for such facilities.

B. Where conduits are installed as spares or for future equipment, these conduits shall include pull string, any conduits installed exposed along a concrete pad or slab, shall be capped .

1.26 DRAWINGS FURNISHED BY CONTRACTOR

A. OWNER shall be provided all CONTRACTOR furnished drawings. Such drawings include, but are not limited to: Control panels, MCC.s, switch boards, instrumentation details, redline mark-up of the Contract drawing and the like.

B. Drawings shall be furnished for review and approval. No materials shall be provided without the ENGINEER's approval.

C. Final drawings shall be furnished or as field modified accounting for any changes made during start up.

1.27 HOMERUNS

A. CONTRACTOR shall coordinate home runs between plan views. Where any conduit is shown in any plan view it shall be installed the entire length may be required.

**PART 2 PRODUCTS (NOT USED)**

**PART 3 EXECUTION (NOT USED)**

END OF SECTION

*This page intentionally left blank.*

# SECTION 16050

# BASIC MATERIALS AND METHODS

## PART 1 GENERAL

### 1.01 SUBMITTALS

A. Submit data sheets on all items per Section 16000.

### 1.02 CODES AND STANDARDS

A. General applicable provisions of the following codes and standards and other codes and standards required by the State of Florida and local jurisdictions are hereby imposed on a general basis for electrical Work (in addition to specific applications specified by individual Work sections of these specifications):

1. U.L.: Electrical materials shall be approved by the Underwriters' Laboratories, Inc. This applies to materials which are covered by U.L. standards. Factory applied labels are required.

2. NEC: National Electrical Code

3. OSHA: Standard of the Occupational Safety and Health Administration are to be complied with.

4. NEMA: National Electrical Manufacturers Association Standards are to be met wherever standards have been established by that agency, and proof is specifically required with material submittals for switchboards, motor control centers, panelboards, cable trays, motors, switches, circuit breakers, and fuses.

5. ANSI: American National Standards Institute

6. NESC: National Electrical Safety Code

## PART 2 PRODUCTS

### 2.01 GROUNDING MATERIALS

A. All ground rods shall be 20 foot 5/8" copperclad, unless otherwise indicated.

B. Around wires shall be soft drawn copper sized per National Electrical Code, unless otherwise indicated.

2.02 CONDUIT

A. PVC Conduit

1. PVC conduit shall be Schedule 80 or Schedule 40 unless otherwise noted and shall be U.L. approved. Comply with Federal Spec WC-1094 and NEMA TC-1.

B. Flexible Conduit

1. All flexible conduits shall be liquidtight, made of corrosion resistant plated steel with extruded polyvinyl covering and watertight connectors.

C. Refer to schedule in drawing for location requirements.

2.03 CABLE, WIRE AND CONNECTORS

A. 600 Volt Power Wiring

1. Individual conductors shall be rated for 600 volts and shall meet the requirements below:

a. Conductors shall be stranded.

b. All wire shall be brought to the job in unbroken packages and shall bear the date of manufacturing; not older than 12 months.

c. Type of wire shall be THWN except where required otherwise by the Contract drawings.

d. No wire smaller than No. 12 gauge shall be used unless specifically indicated.

e. Conductor metal shall be copper.

f. All conductors shall be meggered after installation. Megger testing shall exceed 50 mega ohms.

2. Multi-conductor cables shall be type TC UL 1277 THWN, PVC jacketed 600V with conductor and quantities as indicated.

B. Instrumentation and Control Cable

1. Process instrumentation wire shall be 16 gauge twisted pair, 600 V., aluminum tape shielded, polyvinyl chloride jacketed, as manufactured by the American Insulated Wire Co., Eaton Corp., or equal. Multiconductor cables with individually shielded twisted pairs shall be installed where indicated.

2. Multiconductor control cable shall be stranded 14 gauge, 600 V. THWN insulated overall shielded with PVC jacket, as manufactured by the American Insulated Wire Co., Eaton Corp., or equal.

2.04 TERMINATIONS AND SPLICES (600 VOLTS AND LESS)

A. Terminations of power cable shall be by means of U.L. approved connectors. All connectors shall meet U.L. 486B and shall be compatible with the conductor material.

B. Terminate all control and instrumentation cable with screw-clamp type terminal blocks.

C. Splicing of power, control, or instrumentation wiring will not be allowed except by written approval of the ENGINEER. Where splicing is allowed, splices shall be made with approved compression connectors, and splices shall be made waterproof regardless of location.

2.05 BOXES

A. Boxes for wiring devices, switches and receptacles installed outdoors shall be weatherproof fiberglass with polycarbonate cover plates, or stainless steel 316.

2.06 PULL BOXES AND SPLICE BOXES

A. Location

1. Units used outdoor or in a damp or corrosive environment shall be 316 ss or fiberglass unless otherwise indicated on plans.

2. Units used indoors in dry and clean A/C environments shall be NEMA 1.

B. Size

1. Units shall be sized per NEC as minimum.

C. Required Units

1. Plans depict minimum requirements. Additional units shall be provided as may be required to complete raceway systems.

2.07 MOUNTING AND SUPPORTING ELECTRICAL EQUIPMENT

A. Furnish and install all supports, hangers, and inserts required to mount fixtures, conduits, cables, pull boxes, and other equipment.

B. Support system used indoors in clean, dry and air conditioned areas shall be galvanized steel. All other areas shall be 316 ss with ss fasteners.

C. Perforated straps and wires are not permitted for supporting electrical devices. Anchors shall be of approved types.

D. All supports, hangers, hardware, etc. used outdoors or in in non-air-conditioned indoor areas or in hazardous areas shall be non-ferrous, corrosion resistant or 316 stainless steel. Supports shall be selected to avoid galvanic reactions. Support devices shall be submitted for approval.

E. Provide trapeze, bridge systems or wall bracketed cantilevered system to support the raceway system.

F. Spacing of support systems shall be per NEC. Provide spacing of conduits according to the NEC and the materials used. For PVC conduit, refer to NEC table 347-8.

G. Plans depict minimum requirements. Provide additional units as required to complete raceway system.

2.08 DUCT SEAL

A. Provide Garvin Industries' duct seal or an approved equal

B. Provide and install duct seal at all conduit ends for all new conduit installations, including wetwell and valve vault.

C. Duct seal shall be used to seal all penetrations at junction boxes, control panels, RTU enclosures, terminal boxes, starter enclosures, timers, MCC equipment, panelboards and the like, It shall be a permanently soft, non toxic compound. It shall also not affect other plastic materials or corrode metals.

## PART 3 EXECUTION

### 3.01 GROUNDING

A. Provide ground system as indicated on the drawings and as required by the National Electrical Code.

B. All raceways require grounding conductors. Metallic raceways are not adequate grounding paths. Bonding conductors through the raceway systems shall be continuous from main switch ground buses to panel ground bars of the panelboards, and from panel grounding bars of panelboards and motor control centers to branch circuit outlets, motors, lights, etc. THESE GROUND CONDUCTORS ARE REQUIRED THROUGHOUT THE PROJECT REGARDLESS OF WHETHER CONDUIT RUNS SHOW GROUND CONDUCTORS ON THE DRAWINGS.

C. All connections made below grade shall be of the exothermic type.

D. The grounding system test shall not exceed a 48 hour span dry resistance of 10 ohms. Additional grounding to meet this requirement shall be installed at no extra cost. Grounding and bonding connections shall not be painted.

### 3.02 CONDUIT

A. Locations:

Conduits shall be used as follows:

1. Refer to schedule on drawings.

B. Installation

1. Conduits subjected to rough handling or usage shall be removed from the premises.

2. Conduits must be kept dry and free of water or debris with approved pipe plugs or caps. Care shall be given that plugs or caps be installed before pouring of concrete.

3. Where conduits pass through exterior concrete walls or fittings below grade, the entrances shall be made watertight.

4. Infurred ceilings, conduit runs shall be supported from structure, not furring.

5. Conduits entering panelboards, pull boxes, or outlet boxes shall be secured in place by galvanized locknuts and bushings, one (1) locknut outside and one (1) locknut inside of box with bushing on conduit end. The locknuts shall be tightened against the box without deforming the box. Bushings shall be of the insulating type.

6. Field conduit bends shall be made with standard tools and equipment manufactured especially for conduit bending.

7. Where embedded conduits cross expansion joints, furnish and install offset expansion joints or sliding expansion joints. Sliding expansion joints shall be made with straps and clamps.

8. Exposed runs of conduits shall be installed with runs parallel or perpendicular to walls, structural members or intersections of vertical planes and ceilings, with right angle turns consisting of symmetrical bends. No attempts are made in plans to show required pull boxes, gutters, etc. necessary for the construction of the raceway system but the CONTRACTOR shall provide these raceways as may be required.

9. Conduits in structural slabs shall be placed between the upper and the lower layers of reinforcing steel, requiring careful bending of conduits. Conduits embedded in concrete slabs shall be spaced not less than eight (8) inches on centers or as widely spaced as possible where they converge at panels or junction boxes. Conduits running parallel to slab supports, such as beams, columns and structural walls shall be installed not less than 12 inches from such supporting elements. To prevent displacement during concrete pour, saddle supports for conduit, outlet boxes, junction boxes, inserts, etc., shall be secured.

10. Conduit runs shall always be concealed except where indicated on plans.

11. Pull lines shall be installed in all empty conduits. All pull wires shall be identified with conduit number at each end.

12. Where conduits are run individually, they shall be supported by approved pipe straps secured by means of toggle bolts or tapcons on hollow masonry; tapcons on concrete or solid masonry; machine screws or bolts on metal surfaces and wood screws on wood construction. The use of perforated straps or wires will not be permitted.

13. Wire shall not be installed until all Work of any nature that may cause damage is completed, including pouring of concrete. Mechanical means shall not be used in pulling in wires No. 8 or smaller.

14. Underground conduits not under concrete slabs are to be buried at least two (2) feet below finished grade for circuits rated 600 volts or less, except under traffic areas where motor vehicles may cross. Under traffic areas, conduits are to be buried at least three (3) feet below finished grade.

15. All conduits shall be cleaned by pulling a brush swab through before installing cables.

16. All conduits shall be sealed at each end with electrical putty. Special care shall be taken at all equipment where entrance of moisture could be detrimental to equipment. Approved backing gauze is required prior to the installation of conduit putty.

17. A maximum of two (2) feet of flexible conduit shall be used at connections of all motors, transformers, motor operated valve and gates, instruments and other items of equipment where vibration is present. It shall be supported where required with stainless steel bands.

20. PVC conduit shall be supported to walls and slabs using carlon snap strap conduit wall hangers. Two hole PVC conduit clamps shall not be permitted.

3.03 WIRES, CABLES AND CONNECTIONS

A. Cables pulled into conduits shall be pulled using pulling eyes attached to conductors.

B. Shields shall be grounded at only one termination point.

3.04 BOXES

A. Installation of boxes shall be in accordance with the National Electrical Code requirements.

B. Boxes shall be mounted plumb and level in accessible locations and mounting shall be secure, vibration resistant and galvanically compatible. Hardware shall be used that is specifically intended for the purpose. When mounted in corrosive, damp or wet locations, stainless steel hardware shall be utilized.

3.05 WIRING DEVICES

A. Wiring devices shall be installed in device boxes approved for the application. All connections shall be made with screw terminals. Wiring devices shall be Leviton or approved equal.

B. Wire devices on UPS systems shall be isolated ground, colored orange.

C. Cover plates shall be provided as follows except as otherwise noted.

1. Interior finished area – brushed aluminum

2. Wet areas – gasketed plastic with flip cover.

D. Receptacles installed outdoors, below grade, or in areas other than clean and dry environments shall be GFI and weatherproof. Receptacles shall be weatherproof with cords plugged in.

E. All receptacles shall be GFI protected.

3.06 SUPPORTING DEVICES

A. All items shall be supported from the structural portion of the building and studs, except standard ceiling mounted lighting fixtures and small devices may be supported from ceiling system where permitted by the ENGINEER. However, no sagging of the ceiling will be permitted. Supports and hangers shall be types approved by Underwriters' Laboratories.

B. All floor-mounted devices (switchboards, large control panels, motor control centers, transformers, etc.) shall be securely anchored to the floors. Where recommendations are made by Manufacturer, these recommendations shall be followed.

3.07 CLEANING

A. All electrical equipment enclosures shall be thoroughly cleaned before acceptable by the OWNER. As a minimum, CONTRACTOR shall remove all debris including stripped wire insulation, dirt, and debris.

**END OF SECTION**

# SECTION 16203

# GENERATOR, WEATHER PROOF ENCLOSED, WITH SUB BASE TANK REACH-IN

## GENERATOR SPECIFICATIONS

A. Work included:

1. All of the equipment described in this section shall be supplied by a single equipment Supplier regularly engaged in that business. The CONTRACTOR shall provide and install the Generator and ATS switch as provided by an approved Generator Vendor. The Contractor shall be responsible for coordinating with the Equipment Supplier for the delivery, storage and release of equipment.

2. The Contractor shall provide all connections, electrical terminations, installation, piping, fuel, liquids, and all other mechanical and electrical equipment necessary for a complete emergency power system. This installation shall include the proper tie down and bolting of the generator package with the sub-base fuel tank onto the concrete slab. All necessary equipment and accessories as specified shall be provided and any additional equipment required for a completely functional system shall be supplied.

3. The Supplier shall provide the unit completely assembled. The Contractor shall handle, store, install and make all connections to the equipment.

4. Generator vendor shall supply generator unit in a weatherproof and sound attenuated enclosure with a 500 gallon diesel sub-base fuel tank that meets UL-142 double wall tank requirements.

6. The Contractor shall conduct start up testing and commissioning of the unit. Include a 4 hour 100% generator load bank test.

7. The generator vendor shall be Tradewinds Corporation.

8. The outdoor rated unit shall be a Tier 3, standby emergency use power generator with digital controller, sound attenuated enclosure

## CODES

A. All equipment shall be provided per the requirements of the following codes as applicable for the intended use and installation.

1. NFPA 70, latest edition (National Electrical Code).

2. NFPA 110, Emergency and Standby Power Systems, latest edition.

3. UL2200, the complete generator set shall be UL listed.

4. BOCA, Building Officials and Code Administration.

5. The Florida Building Code (2017 edition).

SUBMITTALS

A. Provide 6 copies of shop drawings. As a minimum include:

1. Engine manufacturer, model number, power output parameters, plans and elevations of the units, entrance points for power, control and fuel, storage and foundation requirements.

2. Engine Generator/Exciter control cubical.

3. Fuel consumption rate curves at ¼, 2/4, ¾, 4/4 loads.

4. Exhaust mufflers and vibration isolators.

5. Battery charger, batteries and battery racks.

6. Dual fuel piping with regulator and diaphragm as required.

7. Cooling water requirements of radiator.

8. Engine cooling air requirements and radiator fan capacity.

9. Electrical diagrams including schematic and interconnection wiring diagrams for all equipment to be provided.

10. Legends for all devices on all diagrams.

11. Sequence of operation, explanations of all portions of schematic wiring diagrams.

12. Provide load calculations including starting and running kVA.

13. Transient voltage response calculation, no voltage transient shall dip below 25%.

14. Enclosure.

15. Registered Engineer's designed steel reinforced concrete pad.

16. Provide installation instruction and details.

17. Provide signed and sealed drawings by a Florida registered engineer verifying that the generator set and its enclosure meet the wind loading requirements of ASCE 7.

18. Three sets of O&M manuals shall be provided.

WARRANTY

A. Equipment furnished under this section shall be guaranteed against defective parts and workmanship under terms of the manufacturer's and dealer's standard warranty. But, in no event shall it be for a period of less than two (2) years from the date of the Owner's acceptance of the unit.

ALTERNATOR

A. The AC generator shall be synchronous, four pole, 2/3 pitch, revolving field, drip-proof construction, single pre-lubricated sealed bearing, air cooled by a direct drive centrifugal blower fan, and directly connected to the engine with flexible drive disc. All insulation system components shall meet NEMA MG1 temperature limits for Class H insulation system. Actual temperature rise measured by resistance method at full load shall not exceed 105 degrees Centrigrade.

B. The generator shall be capable of delivering rated output (kVA) at rated frequency and power factor at any voltage not more than 5 percent above or below rated voltage.

C. A permanent magnet generator (PMG) shall be included to provide a reliable source of excitation power for optimum motor starting and short circuit performance. The PMG and controls shall be capable of sustaining circuit performance. The PMG and controls shall be capable of sustaining and regulating current supplied to a single phase or three phase fault at approximately 300% of rated current for not more than 10 seconds.

D. The subtransient reactance of the alternator shall not exceed 12 percent based on the standby rating of the generator set.

E. Space Heater – Alternator shall be provided with 120V, 200W max. space heater interlocked with generator run relay.

F. Alternator shall be random wound.

G. Provide lightning arrestor and surge capacitor for the generator.

COOLING SYSTEM

A. Radiator – An engine mounted radiator with blower type fan shall be sized to maintain safe operation at 122 degrees Fahrenheit maximum ambient temperature.

B. The engine cooling system shall be pretreated by the engine supplier for the inhibiting of internal corrosion.

C. The radiator shall exhaust through the enclosure.

EXHAUST SILENCER

A. Exhaust Silencer – Critical type critical grade silencer, muffler companion flanges, and flexible braided stainless steel exhaust fittings properly sized shall be furnished according to the manufacturer's recommendations. A silencer rain cap with counter weight shall be provided.

B. Silencer shall be located within the enclosure.

C. Exhaust silencer and flex shall have insulation blankets installed.

AUTOMATIC STARTING SYSTEM

A. Starting Motor – A DC electric starting system with positive engagement drive shall be provided. The motor voltage shall be as recommended by the engine manufacturer.

B. Automatic control – Fully automatic generator start/stop controls in the generator control panel shall be provided. Controls shall provide shutdowns for alarm conditions listed in this specification. Controls shall include a 30 second cranking cycle with lock out.

C. Batteries – A lead acid storage battery set of the heavy duty special starting type shall be provided. Battery voltage shall be compatible with the starting system. Battery set shall be rated for no less than 172 amp hours. Free standing corrosion resistant battery racks and necessary cables shall be provided. Batteries shall be unit mounted.

D. Battery Charger – Current limiting battery charger shall be furnished to automatically recharge the batteries. Charger shall be the float charging type furnished to properly charge the batteries. It shall include overload protection, silicone diode full wave rectifiers, voltage surge suppressor, DC ampmeter, DC voltmeter, fused AC input. Input power shall be 120V single phase. A battery charger fail alarm contact shall be provided. Charger shall be unit mounted.

GENERATOR CONTROL PANEL

A. Generator Set Control

1. The generator set shall be provided with a microprocessor-based control system that is designed to provide automatic starting, monitoring and control functions for the generator set. The control system shall also be designed to allow local monitoring and control of the generator set.

2. Provide form "A" contacts for each alarm and shutdown signal.

B. Unit shall work with ATS. All labor and material shall be provided to coordinate the installation with the ATS, refer to ATS specifications.

GENERATOR RATINGS

A. The generators shall be a minimum kW rating as called out on the drawings, For Well 11, Well 15 and Cresthaven Lift Station provide a 277/480V 3-phase, 0.8 PF. The Generator unit shall start and operate the following loads with a maximum voltage dip of 25%. Supplier shall submit load calculations showing the starting and running of the following generator load, approval of shop drawing on generator unit will depend on this information being included also.

| LOAD | START METHOD | HP/KW | STEP |
|---|---|---|---|
| Cresthaven Lift Station 9 Generator Loads | | | |
| LS Cresthaven controls | NA | 7.5 | 1 |
| LS Cresthaven pump 1 | VFD Starter | 30 | 1 |
| LS Cresthaven Pump 2 | VFD Starter | 30 | 2 |
| LS Cresthaven Pump 3 | VFD Starter | 30 | 3 |

Note: Pump loads for pumps 1, 2 and 3 shall be started staggered/sequentially.

| | | | |
|---|---|---|---|
| Well 11 Generator Loads | | | |
| Well 11 controls | NA | 7.5 | 1 |
| Well 11 Pump | VFD Starter | 75 | 2 |

Well 15 Generator Loads

| | | | |
|---|---|---|---|
| Well 15 controls | NA | 7.5 | 1 |
| Well 15 Pump VFD Starter | | 40 | 2 |

MAIN CIRCUIT BREAKER

A. Unit shall be provided with a main line circuit breaker molded case, interrupting rating exceeding the generator output. Circuit Breakers shall be rated per NEC for fire pump application.

B. The generator breaker shall be located inside the generator enclosure and the access door shall allow for the full NEC clearance requirements of the breaker and its removable cover.

FLUIDS

A. Unit shall be provided with all fluids, fully fuelled and ready for immediate use.

GENERATOR ENCLOSURE

A. A weather resistant, sound attenuated, pre-painted, maintenance free steel enclosure designed as a reach-in to mount to sub-base tank shall be provided to house the engine/generator and accessories. It shall consist of a roof, side walls, and end walls of one-piece, stressed skin, semi-monocoque construction. Enclosure shall be as manufactured by Tradewinds Corporation or an approved equal.

B. The system shall include a cooling and combustion air inlet silencer system, an equipment enclosure section, and a cooling air discharge silencer section. It shall be sound attenuated with a max of 70 dba at 7 meters.

D. Insulation in walls and roof shall be semi-rigid, thermo-acoustic, thickness as required to meet the noise criteria specified. Lining shall be perforated, mill-finish aluminum. Self-adhesive foam and loose or bat-type insulating materials will not be accepted.

E. Lifting provisions shall be provided at or near the enclosure roof, with capacity suitable for rigging the enclosure. Estimated enclosure weight shall be provided on submittal drawings.

F. Personnel access doors shall be fabricated of the same materials as the enclosure walls. They shall be reinforced for rigidity, gasketed, and set in a welded frame to ensure proper operation. Handles shall be key lockable, all doors keyed alike.

Doors and/or hinged louver panels should be provided in sufficient quantity to allow access for all necessary maintenance and operation, coordinated with generator set manufacturer. All handles, hinges and hardware shall be stainless steel.

G. Air handling shall be as follows: Air will enter through removable hood(s) or a vertical plenum. Intake openings shall be screened to prevent the entrance of rodents and bugs. Radiator discharge will be through a gravity operated damper and into a hood or vertical plenum, as dictated by airflow. The system shall be designed for 0.5" w.c. static pressure drop maximum through enclosure.

H. Enclosure manufacturer shall provide all necessary hardware to internally mount the specified exhaust silencer(s) and maintain the weather resistant integrity of the system.

J. LED interior lighting shall be provided, lighting shall be protected mesh/plastic globe lens; lights shall operate from weather proof type toggle switches; the light switch shall be located at each door location, powered from batteries.

CLEARANCES

A. The manufacturer shall locate equipment inside enclosure so all NEC required clearances shall be met in front of the generator main circuit breaker, panelboard, and battery charger.

WIND LOAD REQUIREMENTS

A. The Contractor shall provide signed and sealed drawings from a Registered Florida engineer confirming that the generator set and its enclosure meets the wind load requirements of the Florida Building Code, and ASCE 7.

GENERATOR CONCRETE PAD

A. The Contractor shall provide signed and sealed drawings from a Registered Florida engineer detailing the steel reinforced concrete pad for the generator. The drawings show the minimum dimensions of this concrete pad.

TESTS

A. The unit shall be tested at rated frequency and voltage.

B. Following installation, the following tests shall be performed by the system manufacturer's local dealer representative(s) in the presence of the Owner's Engineer or designated appointee:

1. Pre-start checks:

    a. Oil level

    b. Water level

    c. fuel pressure from gas line/regulator

    d. Battery connection and charge condition

    e. Engine to control interconnects

    f. Engine generator intake/exhaust obstructions

C. Supplier shall provide onsite operation tests

1. Load – One hour operation at 80% of full load rating. Two hours of operation at 100% of full load rating. After the first half hour stabilization period at full load, the following shall be recorded at fifteen minute intervals:

    a. Voltage, amps and frequency.

    b. Fuel pressure, oil pressure and water temperature.

    c. Exhaust gas temperature at engine exhaust outlet.

    d. Ambient temperature

    e. Kilowatts

    f. Power factor

    g. kVARS

    h. Generator temperature

2. Test shall utilize resistive load banks for the full load. Minimum load shall be equal to the nameplate rating of the engine/generator set in kW. Generator supplier shall supply all load banks equipment necessary for connecting generator to load banks. Supplier shall provide all labor and material to perform test.

3. Proper operation of controls, engine shutdown and safety devices shall be demonstrated to the Owner and its personnel. Provide a minimum of 2 hours training.

# SECTION 16250

# AUTOMATIC TRANSFER SWITCH

## PART 1 GENERAL

1.01 Section includes

A. Automatic transfer switches (ATS) with delayed transition. This section is provided for the Contractor to provide and install the ATS switch and related raceways and controls along with mounting hardware.

1.02 References

A. Transfer switches shall be designed and manufactured to the latest revision of UL-1008 and shall be provided with a UL label.

1.03 Submittals

A. Submittals shall be provided in accordance with the general conditions but not less than six (6) copies.

B. Detailed fully engineered drawings shall be provided. Standard product data sheet will be rejected.

1.04 Qualifications

A. To be considered for approval, a manufacturer shall be specialized in manufacturing products specified in this Section with a minimum of ten (10) years documented experience.

1.05 Warranty

A. Manufacturer shall warrant specified equipment to be free from defects in materials and workmanship for one (1) year from date of installation.

1.06 Integration

A. Units shall be provided to fully integrate with the standby generator system. Coordination shall be required of the generator vendor.

B. See the drawings for additional requirements.

## PART 2 PRODUCTS

2.01 Model

A. Model shall be Eaton, Tradewinds, Cutler Hammer, Asco, Lake Shore or an approved equal.

B. The switch shall be of the automatic power sensing, delayed transition type. The switch shall be UL approved standard 1008, rated to carry full name plate current at all times. A manual handle shall be provided for emergency operation from the deadfront inner panel.

C. Provide pilot devices or pilot LED.s.

D. Unit shall have dead front inner panel for manual operation.

E. Units shall be rated NEMA 4X 316 SS. ATS Minimum Features:

1. Voltage sensing on all three phases on normal and emergency sources with automatic low voltage and phase loss detection. Adjustable over/under frequency sensor shall be provided on the emergency source.

2. Adjustable time delay after line failure before engine start, 0-5 minutes.

3. Automatic transfer to generator when voltage is present.

4. Adjustable time delay on retransfer when normal power is available, 2-30 minutes. Push button to cancel time delay on return to normal.

5. Adjustable time delay for engine running unloaded after transfer to normal source, 2-30 minutes.

6. 4-Pilot lights or LED.s

a. Green for switch in normal position.

b. Red for switch in emergency position.

c. Green for normal power available.

d. Red for emergency power available.

7. 4-Position selector switch, maintained, front door mounted on outside or keypad

    a. Off – Switch position remains constant; generator shall not crank.

    b. Auto – Normal automatic control.

    c. Test – Test operation of the transfer system and standby generator by simulating line power loss. System shall remain in the test mode until selector switch in returned to the auto mode which will allow normal retransfer, logic and/or time delays shall be provided to allow switch mode change without undesired actions.

    d. Engine test – start engine without ATS transfer.

8. Status contacts (form A) wired to terminals for inputs to station RTU/PLC equipment:

    a. Switch in normal position.

    b. Switch in emergency position.

    c. Normal voltage present.

    d. Emergency voltage present.

9. Engine start contact (Form A) wired to terminals for engine start.

10. Short circuit withstand rating shall be 42,000 amps, unless otherwise noted.

11. Provide adjustable time delay for transition period in the neutral position with the pole of the switch de-energized.

12. Unit shall be front accessible only and wall mounted.

13. Provide lugs for cable connections.

14. Unit shall be U.L. labeled.

15. Installation Contractor shall be responsible for all field power and control wiring.

16. Provide sunshield on the top.

17. Provide digital multi-meter Cutler Hammer IQ 200 Series (or equal) with front panel display volts, amps, kWD etc. or equal. Provide potential and current transformers as may be required.

18. Provide electronic control.

19. Provide keypad and sunlight use display.

## PART 3 EXECUTION

3.01 INSTALLATION

A. Install ATS in accordance with manufacturers written instructions and the National Electrical Code.

3.02 FIELD QUALITY CONTROL

A. Inspect ATS visually.

B. Perform several manual operations.

C. Verify circuit continuity and megger each conductor. Minimum megger valve shall be 50 mega-ohms.

D. Check tightness of all connections using calibrated torque wrench per manufacturers recommended torque values.

3.03 ADJUSTING

A. Adjust time delay setting to values as required for proper operation of the power system. Provide settings per Owner's instructions.

3.04 TESTING

A. Test manual operation of the unit under load. Test all automatic features of ATS including transfer from normal to emergency and from emergency to normal, remote generator start control. Provide testing in the presence of the Owner and Engineer.

3.05 TRAINING

A. Provide a minimum of four (2) hours training.

3.06 PROGRAMMING

A. Program switch features per Engineer/Owner requirements.

B. Provide typewritten listing of final parameter setting with O&M manuals.

**END OF SECTION**

*This page intentionally left blank.*

# Village of Palm Springs

PUBLIC SERVICE DEPARTMENT

**EMERGENCY GENERATOR**
**IMPROVEMENTS**
**ITB# 2021B-004**
**Addendum No. 1**
**February 1, 2021**

---

**BIDS DUE: 2:00 PM, Local Time, March 18, 2021**

---

TO ALL VENDORS BIDDING ON THIS PROJECT:

The changes, additions, substitutions, and/or deletions contained in Addendum No. 1 are hereby made a part of the Bid Documents for the **Emergency Generator Improvement Project**, fully and completely as if the same were fully set forth herein.

**IN THE PLANS**

No changes

**IN THE SPECIFICATIONS**

1. Bid due date has changed from 2:00 PM local time on February 18, 2021 to 2:00 PM local time on March 18, 2021.
2. Due date for the Deadline for Submissions of Questions has changed from 5:00 PM local time on February 5, 2021 to 5:00 PM local time on March 5, 2021.

Receipt acknowledged and conditions agreed to the _____ day of _____, 2021.

_____ _____

Bidder By

END OF ADDENDUM

# Emergency Generator Improvements
# Addendum No. 2
# March 17, 2021

---

***BIDS DUE: 2:00 PM, Local Time, March 25, 2021***

---

TO ALL VENDORS BIDDING ON THIS PROJECT:

The changes, additions, substitutions, and/or deletions contained in Addendum No. 2 are hereby made a part of the Bid Documents for the **Emergency Generator Improvements**, fully and completely as if the same were fully set forth herein.

**IN THE PLANS**

No changes

**IN THE SPECIFICATIONS**

1. Bid due date has changed from 2:00 PM local time on March 18, 2021 to 2:00 PM local time on **March 25, 2021**.

Receipt acknowledged and conditions agreed to the _____ day of _____, 2021.

_____
By Bidder

END OF ADDENDUM

# Emergency Generator Improvements
# Addendum No. 3
# March 22, 2021

---

**BIDS DUE: 2:00 PM, Local Time, March 25, 2021**

---

**TO ALL VENDORS BIDDING ON THIS PROJECT:**

The changes, additions, substitutions, and/or deletions contained in Addendum No. 3 are hereby made a part of the Bid Documents for the **Emergency Generator Improvements**, fully and completely as if the same were fully set forth herein.

**QUESTIONS FROM BIDDERS**

**1. Question:** What I/O signals are requested?

**Answer:** 4 discrete signals including Generator Running, Generator Fault, Generator Low fuel Alert, ATS in Normal Position

**2. Question:** Will other manufacturers besides Tradewinds will be considered for the generator?

**Answer:** Yes. Cummins, CAT, and Generac will be considered as equal.

**3. Question:** The concrete slab on site 9 is to be repainted and the new concrete painted to match. Do you want the other sites #11 and 15 to have the slabs painted?

**Answer:** No, the other sites do not have to have the concrete painted.

**4. Question:** On drawing E-8 the panelboards are all listed as Nema 3 R enclosures. All the other new equipment (CPT, Disconnect and ATS) are to be nema 4 X. Do you want the panelboards to be nema 4X?

**Answer:** Provide either 3R 316SS or 4X 316 SS

**5. Question:** Tradewinds is shown as specified generator manufacturer. Drawings show ATS's mounted on H frame, Tradewinds tends to include the ATS's internally in generator enclosure. Please clarify intent to have them separate from generator or if they can be internal in enclosure will they still need to be 4X316SS?

**Answer:** Provide separate ATS per plans and ATS spec.

**6. Question:** Can Cummins be used as an equal or superior generator supplier if submittals are sent in with the bid?

**Answer:** Yes. Cummins, CAT, and Generac will be considered as equal.

**7. Question:** How long can the control panels be without power before pumps or mobile generators are required?

**Answer:** The control panels can be without permanent FPL power for up to 2 hours. During the 2-hour period, the Owner will provide temporary power via portable generators or temporary bypass pumping. The Contractor will be required to schedule and coordinate with Engineer and Owner.

**8. Question:** Ground rod specs state all to be 20' X 5/8" however detail on E-9 Pipestand shows 10' X 5/8". Please clarify.

**Answer:** Provide 20’ long (two 10’ with coupler for 20’ long 5/8” electrodes).

**9. Question:** Specification section 01400, 1.04, items F & G, I understand the concrete testing (#3), please confirm that the other items listed do not apply to this project.

**Answer:** Density testing and concrete cylinder testing for the concrete slabs is the only testing required under this section.

**10. Question:** Generator specifications, 16203-3, item G. Is this meant for the manufacturer of the generator to include or the contractor to add after receipt. If contractor to supply, please clarify manufacturer and model and where they are to be placed in the unit.

**Answer:** Generator Vendor needs to provide this, if shipped loose they need to instruct electrical contractor where and how to connect this to unit.

**11. Question:** Who is responsible for programing of the RTU I/O inputs?
**Answer:** The Contractor is responsible for landing the I/O wires in the existing RTUs. The Owner will be responsible for the programming.

**12. Question:** Will the low bid evaluation be done on a per site basis or cumulatively?

**Answer:** The low bid will be calculated by the cumulative total of all the work at all three sites.

**13. Question:** All electrical conduit above ground is acceptable with PVC schedule 80 or is metal conduit required.
**Answer:** Schedule 80 PVC is acceptable.

**14. Question:** Is Owner responsible for hiring RTU contractor to tie generators into RTU System or is contractor responsible? If so provide RTU contractor contact.

**Answer:** The Contractor is responsible for landing the I/O wires in the existing RTUs. The Owner will be responsible for the programming.

**15. Question:** Per virtual pre-bid meeting it was mentioned that additional generator manufactures would be accepted and not just Tradewinds.

**Answer:** Yes. Cummins, CAT, and Generac will be considered as equal.

**16. Question:** Is project FEMA funded? Are there any special payment disclosures?

**Answer:** There are no grant funds or special payment disclosures included in this project.

**17. Question:** With major equipment long lead times in excess of 180 days, when will the notice to proceed be issued?

**Answer:** Additional contract time will be added if the Contractor can provide documentation on the long lead time of equipment beyond the Contractor's control.

**IN THE SPECIFICATIONS**

1. Bid due date has changed from 2:00 PM local time on March 18, 2021 to 2:00 PM local time on March 25, 2021.

---

Receipt acknowledged and conditions agreed to the _____ day of _____, 2021.

_____
By Bidder

END OF ADDENDUM

# VILLAGE OF PALM SPRINGS
# PRELIMINARY CAPITAL IMPROVEMENT PROJECT DETAIL

**TASK #**

**Project Name:** Fixed Generator at Lift Station 9
**Department:** Utilities
**Location:** Utilities - Lift Stations- LS 9

**Project Manager:** Paul Ward
**Date Requested:** 9/25/19
**Date Approved:** 10/1/20

## DESCRIPTION / JUSTIFICATION:

Three of the largest lift stations (PS No. 1, PS No. 9, PS No. 11) within the Village watewater collection system lack an on-site emergency power supply. As a result, during power outages staff must deliver a portable generator to the stations which serve large service areas and often flow from other lift stations. Installing permanent emergency power to these critical lift stations is important to the risk management of the Village during emergency situations such as a hurricane. Pump Station No. 9 (Big Cresthaven) is the first station planned for a fixed diesel-powered emergency generator.

## PROJECT EXPENDITURES / FUNDING SOURCES:

| PROJECT COSTS: | FY1 | FY2 | FY3 | FY4 | FY5 | FY6 | TOTAL |
|---|---|---|---|---|---|---|---|
| Land/Easement Acquisition | | | | | | | $ 0.00 |
| Site Preparation (clearing,soil testing,permitting,survey) | | | | | | | $ 0.00 |
| Architectural Services | | | | | | | $ 0.00 |
| Engineering Services | 20,000.00 | | | | | | $ 20,000.00 |
| Construction | 53,000.00 | | | | | | $ 53,000.00 |
| Equipment | 80,000.00 | | | | | | $ 80,000.00 |
| Improvement (utility, lightning) | | | | | | | $ 0.00 |
| Other (Specify) | | | | | | | $ 0.00 |
| **TOTAL PROJECT COSTS** | $ 153,000.00 | $ 0.00 | $ 0.00 | $ 0.00 | $ 0.00 | $ 0.00 | $ 153,000.00 |

| SOURCES OF FUNDS: | FY1 | FY2 | FY3 | FY4 | FY5 | FY6 | TOTAL |
|---|---|---|---|---|---|---|---|
| General Fund Revenue CY | 200000 | | | | | | $ 0.00 |
| One Cent Sales Tax Funding | | | | | | | $ 0.00 |
| Grant Funding: | | | | | | | |
| CDBG | | | | | | | $ 0.00 |
| FRDAP | | | | | | | $ 0.00 |
| PBC | | | | | | | $ 0.00 |
| Other (Specify) | 200000 | | | | | | $ 0.00 |
| W/S Enterprise Fund Revenues | 153,000.00 | | | | | | $ 153,000.00 |
| Stormwater Fund Revenues | | | | | | | $ 0.00 |
| Undetermined | | | | | | | $ 0.00 |
| **TOTAL PROJECT REVENUE** | $ 153,000.00 | $ 0.00 | $ 0.00 | $ 0.00 | $ 0.00 | $ 0.00 | $ 153,000.00 |

## OPERATIONAL IMPACT

| OPERATIONAL IMPACT | FY1 | FY2 | FY3 | FY4 | FY5 | FY6 | TOTAL |
|---|---|---|---|---|---|---|---|
| Additional Revenues | | | | | | | |
| Charges for Services | | | | | | | 0.00 |
| Other Revenues | | | | | | | 0.00 |
| Less Additional Expenditures | | | | | | | |
| New Personnel | | | | | | | 0.00 |
| Maintenance and Other Operating | | | | | | | 0.00 |
| Contracts & Leases | | | | | | | 0.00 |
| **Net Annual Impact on Operations** | $ 0.00 | $ 0.00 | $ 0.00 | $ 0.00 | $ 0.00 | $ 0.00 | $ 0.00 |
| **TOTAL** | $ 0.00 | $ 0.00 | $ 0.00 | $ 0.00 | $ 0.00 | $ 0.00 | **$ 0.00** |

**Department Head**

**Village Manager**

# VILLAGE OF PALM SPRINGS
# PRELIMINARY CAPITAL IMPROVEMENT PROJECT DETAIL

**TASK #**

**Project Name:** Well No. 11 Emergency Generator
**Department:** Utilities
**Location:** Utilities - Eastern/Main Wellfield
**Project Manager:** Paul Ward
**Date Requested:** 9/25/19
**Date Approved:** 10/1/20

## DESCRIPTION / JUSTIFICATION:

Water wells supply all of the water for the two (2) water treatment plants operated by the Village. Currently the only wells connected to emergency power are those located at or immediately adjacent to the water treatment plants. This project will add a diesel powered permanent emergency generator at Well No. 11 improving the reliability of the water supply for the Village during emergency events.

## PROJECT EXPENDITURES / FUNDING SOURCES:

| PROJECT COSTS: | FY1 | FY2 | FY3 | FY4 | FY5 | FY6 | TOTAL |
|---|---|---|---|---|---|---|---|
| Land/Easement Acquisition | | | | | | | $ 0.00 |
| Site Preparation (clearing,soil testing,permitting,survey) | | | | | | | $ 0.00 |
| Architectural Services | | | | | | | $ 0.00 |
| Engineering Services | 28,000.00 | | | | | | $ 28,000.00 |
| Construction | 40,000.00 | | | | | | $ 40,000.00 |
| Equipment | 60,000.00 | | | | | | $ 60,000.00 |
| Improvement (utility, lightning) | | | | | | | $ 0.00 |
| Other (Specify) | | | | | | | $ 0.00 |
| **TOTAL PROJECT COSTS** | $ 128,000.00 | $ 0.00 | $ 0.00 | $ 0.00 | $ 0.00 | $ 0.00 | $ 128,000.00 |

| SOURCES OF FUNDS: | FY1 | FY2 | FY3 | FY4 | FY5 | FY6 | TOTAL |
|---|---|---|---|---|---|---|---|
| General Fund Revenue CY | 200000 | | | | | | $ 0.00 |
| One Cent Sales Tax Funding | | | | | | | $ 0.00 |
| Grant Funding: | | | | | | | |
| CDBG | | | | | | | $ 0.00 |
| FRDAP | | | | | | | $ 0.00 |
| PBC | | | | | | | $ 0.00 |
| Other (Specify) | 200000 | | | | | | $ 0.00 |
| W/S Enterprise Fund Revenues | 128,000.00 | | | | | | $ 128,000.00 |
| Stormwater Fund Revenues | | | | | | | $ 0.00 |
| Undetermined | | | | | | | $ 0.00 |
| **TOTAL PROJECT REVENUE** | $ 128,000.00 | $ 0.00 | $ 0.00 | $ 0.00 | $ 0.00 | $ 0.00 | $ 128,000.00 |

## OPERATIONAL IMPACT

| OPERATIONAL IMPACT | FY1 | FY2 | FY3 | FY4 | FY5 | FY6 | TOTAL |
|---|---|---|---|---|---|---|---|
| Additional Revenues | | | | | | | |
| Charges for Services | | | | | | | 0.00 |
| Other Revenues | | | | | | | 0.00 |
| Less Additional Expenditures | | | | | | | |
| New Personnel | | | | | | | 0.00 |
| Maintenance and Other Operating | | | | | | | 0.00 |
| Contracts & Leases | | | | | | | 0.00 |
| **Net Annual Impact on Operations** | $ 0.00 | $ 0.00 | $ 0.00 | $ 0.00 | $ 0.00 | $ 0.00 | $ 0.00 |
| **TOTAL** | $ 0.00 | $ 0.00 | $ 0.00 | $ 0.00 | $ 0.00 | $ 0.00 | **$ 0.00** |

**Department Head**

**Village Manager**

# VILLAGE OF PALM SPRINGS
# PRELIMINARY CAPITAL IMPROVEMENT PROJECT DETAIL

**TASK #**

**Project Name:** Well No. 15 Emergency Generator
**Department:** Utilities
**Location:** Utilities - Eastern/Main Wellfield
**Project Manager:** Paul Ward
**Date Requested:** 9/25/19
**Date Approved:** 10/1/20

## DESCRIPTION / JUSTIFICATION:

Water wells supply all of the water for the two (2) water treatment plants operated by the Village. Currently the only wells connected to emergency power are those located at or immediately adjacent to the water treatment plants. This project will add a diesel powered permanent emergency generator at Well No. 15 improving the reliability of the water supply for the Village during emergency events.

## PROJECT EXPENDITURES / FUNDING SOURCES:

| PROJECT COSTS: | FY1 | FY2 | FY3 | FY4 | FY5 | FY6 | TOTAL |
|---|---|---|---|---|---|---|---|
| Land/Easement Acquisition | | | | | | | $ 0.00 |
| Site Preparation (clearing,soil testing,permitting,survey) | | | | | | | $ 0.00 |
| Architectural Services | | | | | | | $ 0.00 |
| Engineering Services | 28,000.00 | | | | | | $ 28,000.00 |
| Construction | 40,000.00 | | | | | | $ 40,000.00 |
| Equipment | 60,000.00 | | | | | | $ 60,000.00 |
| Improvement (utility, lightning) | | | | | | | $ 0.00 |
| Other (Specify) | | | | | | | $ 0.00 |
| **TOTAL PROJECT COSTS** | $ 128,000.00 | $ 0.00 | $ 0.00 | $ 0.00 | $ 0.00 | $ 0.00 | $ 128,000.00 |

| SOURCES OF FUNDS: | FY1 | FY2 | FY3 | FY4 | FY5 | FY6 | TOTAL |
|---|---|---|---|---|---|---|---|
| General Fund Revenue CY | 200000 | | | | | | $ 0.00 |
| One Cent Sales Tax Funding | | | | | | | $ 0.00 |
| Grant Funding: | | | | | | | |
| CDBG | | | | | | | $ 0.00 |
| FRDAP | | | | | | | $ 0.00 |
| PBC | | | | | | | $ 0.00 |
| Other (Specify) | 200000 | | | | | | $ 0.00 |
| W/S Enterprise Fund Revenues | 128,000.00 | | | | | | $ 128,000.00 |
| Stormwater Fund Revenues | | | | | | | $ 0.00 |
| Undetermined | | | | | | | $ 0.00 |
| **TOTAL PROJECT REVENUE** | $ 128,000.00 | $ 0.00 | $ 0.00 | $ 0.00 | $ 0.00 | $ 0.00 | $ 128,000.00 |

## OPERATIONAL IMPACT

| OPERATIONAL IMPACT | FY1 | FY2 | FY3 | FY4 | FY5 | FY6 | TOTAL |
|---|---|---|---|---|---|---|---|
| Additional Revenues | | | | | | | |
| Charges for Services | | | | | | | 0.00 |
| Other Revenues | | | | | | | 0.00 |
| Less Additional Expenditures | | | | | | | |
| New Personnel | | | | | | | 0.00 |
| Maintenance and Other Operating | | | | | | | 0.00 |
| Contracts & Leases | | | | | | | 0.00 |
| **Net Annual Impact on Operations** | $ 0.00 | $ 0.00 | $ 0.00 | $ 0.00 | $ 0.00 | $ 0.00 | $ 0.00 |
| **TOTAL** | $ 0.00 | $ 0.00 | $ 0.00 | $ 0.00 | $ 0.00 | $ 0.00 | **$ 0.00** |

**Department Head**

**Village Manager**


LS No. 9
Well No. 15
Well No. 11
Cresthaven Boulevard
Purdy Lane
Park Lane
Canal 8 Road
Canal 9 Road
Canal 10 Road
Alemeda Drive
Springdale Circle
Cypress Lane
Dale Road
Vicliff Road
Kent Avenue
Sussex Avenue
Colle Drive
Kivey Drive
Mediterranean Road
Diamond Road
Broadway Street
Marilyn Drive
Weymouth Street
Carver Street
Dolan Road
Lillian Road
Thelma Road
Meadow Road
Frost Road
Drew Way
Pinehurst Road
East Lake Road
Shady Lane Road
Bayside Road
Greenbrier Drive
Cavalier Road
Ponte Vedra Road
Mid Pines Road
Winged Foot Road
Rex Court
Riley Avenue
Emerson Avenue
Carol Avenue
Longfellow Drive
Keller Drive
Lori Drive
Russell Drive
10th Avenue North
4th Street
Palm Springs
Palm Springs Village Center Complex
Dorsey Funeral Home and Lake Worth Memory Gardens
South Military Trail
Military Trail
Kirk Road
Haverhill Road South
South Congress Avenue
Davis Road
Gulfstream Road
Donald Road
Ardell Way
Rachael Way
Hillary Circle
Linda Lane
Barbridge Road
Line Drive
Beech Drive
State Drive
Anna Lane
Forest Lane
Cypress Lane
Acacia Lane
Lakehaven Road
Cedarcrest Road
Ashley Drive East
Kelly Drive
Sussex Avenue
Reo Lane
Ford Road
Evans Drive
Rostan Lane
Yucatan Drive
Cayman Drive
Henthorne Drive
Poe Drive
Osborne Drive
Lanier Drive
Palo Alto Drive
Los Altos Road
Fontana Drive
San Mateo Drive
Springdale Circle
Lori Drive
Tucker Road
Acres Drive
Lena Lane
Pinecrest Court
Taylor Lane
Pineway Drive
Caroma Lane
Sunset Drive
Sunrise Drive
Monica Drive
Laura Lane
Bennie Lane
Bonnie Drive
Pretty Lane
49th Avenue South
West Carroll Circle
East Carroll Circle
Trinidad Court
Dudley Drive East
Barkley Drive West
Barkley Drive East
Martin Avenue
Walker Avenue
E Road
Abbey Road
FL 809
FL 807
I-8
I-9
I-10

# Village of Palm Springs

# Executive Brief

**AGENDA DATE:** May 13, 2021

**DEPARTMENT:** Library

---

**ITEM 7.1:** Presentation - Joseph L. Fallon Scholarship Awards - Five (5) Scholarship Awards

**SUMMARY:**

Each year, the Village of Palm Springs awards scholarships to selected high school seniors who live within the Village. In 1996, the annual Village scholarship was named in memoriam for Palm Springs resident and library volunteer Joseph Fallon, who died suddenly during his senior year at John I. Leonard High School.

This year, the Village Council is expected to present five (5) Joseph L. Fallon Scholarship awards to applicants based financial need, grades, experience and personal appraisal. The recommended 2021 Fallon Scholarship winners include:

- **Elizabeth Anderson:** Elizabeth is a student at Greenacres Christian Academy and plans to attend Palm Beach State College in Lake Worth, FL. Her major is Elementary Education.
- **Natalya Gertner:** Natalya is a student at G-Star of the Arts and plans to attend Florida Atlantic University in Boca Raton, FL. Her major is English.
- **Natalie Gutierrez:** Natalie is a student at Forest Hill Community High School and plans to attend The University of Miami in Coral Gables, FL or The University of Central Florida in Orlando, FL. Her major is Information Technology/Computer Science.
- **Andre Noble:** Andre is a student at John I. Leonard High School and plans to attend Florida A&M University in Tallahassee, FL. or Palm Beach State in Lake Worth, FL. His major is Emergency Services.
- **Humberto Sigler:** Humberto is a student at Forest Hill Community High School and plans to attend Palm Beach State College in Lake Worth, FL. His major is Psychology.

The Fallon Scholarship Committee met on April 22, 2021, and recommended approval of five

(5) scholarship awards to local, Village high school students to assist with their plans to attend college.

The Village Council is expected to approve this recommendation on May 13, 2021 and, if approved, will present each scholarship recipient with a check during the May 13, 2021 Village Council Meeting.

**FISCAL IMPACT:**

Funding to support the proposed awards is available within the FY 2021 Budget - General Fund

**ATTACHMENTS:**

2021 Fallon Scholarship Recipients

# Class of 2021

## Joseph Fallon Scholarship



# Elizabeth Anderson




Elizabeth is a student at Greenacres Christian Academy and plans to attend Palm Beach State College in Lake Worth, FL. Her major is Elementary Education.

# Natalya Gertner



Natalya is a student at G-Star of the Arts and plans to attend Florida Atlantic University in Boca Raton, FL. Her major is English.

# Natalie Gutierrez



Natalie is a student at Forest Hill Community High School and plans to attend The University of Miami in Coral Gables, FL .Her major is Information Technology/Computer Science.

# Andre Noble



Andre is a student at John I. Leonard High School and plans to attend Palm Beach State in Lake Worth, FL. His major is Education.

# Humberto Sigler



Humberto is a student at Forest Hill Community High School and plans to attend Palm Beach State College in Lake Worth, FL. His major is Psychology.



# Congratulations!

THE VILLAGE OF PALM SPRINGS
Garden Spot of Palm Beach County
FLORIDA

*Office of the Mayor*

# Village of Palm Springs, Florida

# Proclamation

**WHEREAS,** the Congress and President of the United States of America has designated the week of May 9 through May 15, 2021 as ***"Police Week"*** and May 15, 2021 as ***"Peace Officers Memorial Day"***; and

**WHEREAS,** Law Enforcement Officers are our guardians of life and property, defenders of the individual right to be free, and dedicated to the preservation of life, liberty and the pursuit of happiness; and

**WHEREAS,** it is important that all citizens know and understand the duties, responsibilities, hazards and sacrifices of their police department, and know that members of our police department recognize their duty to serve the people by safeguarding life and property, by protecting them against violence or disorder, and by protecting the innocent against deception and the weak against oppression or intimidation; and

**WHEREAS,** the members of the Palm Springs Police Department play an essential role in safeguarding the rights and freedoms of the citizens and visitors to Palm Springs; and the Village of Palm Springs wishes to honor our own warriors in the war against crime for their valor, service and dedication, and for unceasingly providing a vital public service; and

**WHEREAS,** all citizens in this community are urged to honor and show sincere appreciation for the police officers of this Village by deed, remark and attitude and show thanks to all the police officers who make it possible for us to leave our homes and family in safety each day and to return to our homes knowing they are protected by officers willing to sacrifice their lives, if necessary, to guard against all who would violate the law.

**NOW, THEREFORE, I, BEV SMITH,** Mayor of the Village of Palm Springs, Florida, do hereby proclaim the week of **May 9 through May 15, 2021** as

***"Police Week in Palm Springs"***

and **May 15, 2021** as:

***"Peace Officers Memorial Day in Palm Springs"***

*In witness whereof I have herunto set my hand and caused the seal of this city to be affixed*

*Mayor* Beverly Smith

*Date* May 11, 2021

# Village of Palm Springs

# Executive Brief

**AGENDA DATE:** May 13, 2021

**DEPARTMENT:** Administration

---

**ITEM 7.3:** Hepatitis Month Proclamation - May 2021

**SUMMARY:**

**FISCAL IMPACT:**

**ATTACHMENTS:**
Proclamation Hepatitis Month.pdf

*Office of the Mayor*

# Village of Palm Springs, Florida

# Proclamation

**WHEREAS,** the Village of Palm Springs recognizes Hepatitis C as a major public health issue. Many who become infected are unaware of their diagnosis unless accurately diagnosed through testing. Hepatitis C is a liver disease caused by the hepatitis C virus (HCV) that typically produces no symptoms. Over decades, it can lead to severe liver disease, including cirrhosis and liver cancer. Most of those infected are unaware that they have the disease. HCV is the most common chronic blood-borne infection in the United States, with an estimated 4.1 million Americans (1.8 percent of the population) being infected; and

**WHEREAS,** Palm Beach County ranked 3rd for Hepatitis C for the state of Florida in 2017, posing increased public health challenges to our community; and

**WHEREAS,** in 2016, Florida reported 29,757 cases of hepatitis C. Forty-seven percent of chronic hepatitis C cases are in individuals aged over 50 years, whereas 19 percent of chronic hepatitis C cases are in individuals aged under 30 years. However, 37 percent of acute, or newly infected, hepatitis C cases are in individual under 30 years in age; this is due in part to increasing rates of injection drug use related to the opioid epidemic; and

**WHEREAS,** Village of Palm Springs recognizes Hepatitis C is transmitted via blood, most commonly by injection drug use, and, before 1992, by blood transfusion. No vaccine is available, and no medications have proven effective in preventing infection after exposure however, it can be preventable through prevention education, risk-reduction education, and community outreach; and

**WHEREAS,** Hepatitis Awareness Month provides an opportunity for Monarch Health Services, in partnership with The Florida Department of Health in Palm Beach County and the Village of Palm Springs to raise public awareness about the impact of Hepatitis C in our communities and to promote the importance of prevention, risk-reduction education, testing for, and treating Hepatitis C.

**NOW, THEREFORE, I, BEV SMITH,** Mayor of the Village of Palm Springs, do hereby proclaim the recognition of, do hereby proclaim May 2021 as **HEPATITIS DISEASE AWARENESS MONTH**

VILLAGE OF PALM SPRINGS SEAL 1957 FLORIDA

*In witness whereof I have herunto set my hand and caused the seal of this city to be affixed*

*Mayor* Beverly Smith

*Date* May 11, 2021

# Village of Palm Springs

# Executive Brief

**AGENDA DATE:** May 13, 2021

**DEPARTMENT:** Administration

---

**ITEM 7.4:** Building Safety Month Proclamation - May 2021

**SUMMARY:**

**FISCAL IMPACT:**

**ATTACHMENTS:**
Proclamation Building Safety Month - May 2021

*Office of the Mayor*

# Village of Palm Springs, Florida

# Proclamation

**Whereas,** the Village of Palm Springs is committed to recognizing that our growth and strength depends on the safety and economic value of the homes, buildings and infrastructure that serve our citizens, both in everyday life and in times of natural disaster, and;

**Whereas,** our confidence in the structural integrity of these buildings that make up our community is achieved through the devotion of vigilant guardians - building safety and fire prevention officials, architects, engineers, builders, tradespeople, design professionals, laborers, and others in the construction industry - who work year-round to ensure the safe construction of buildings, and;

**Whereas**, these guardians are dedicated members of the International Code Council, a U.S. based organization, that brings together local, state, and federal officials that are experts in the built environment to create and implement the highest-quality codes to protect us in the buildings where we live, learn, work, worship, play, and;

**Whereas,** our nation benefits economically and technologically from using the International Codes® that are developed by a national, voluntary consensus codes and standards developing organization, our government is able to avoid the high cost and complexity of developing and maintaining these codes, which are the most widely adopted building safety and fire prevention codes in the nation; these modern building codes include safeguards to protect the public from natural disasters such as hurricanes, snowstorms, tornadoes, wildland fires, floods and earthquake; and;

**Whereas,** Building Safety Month is sponsored by the International Code Council to remind the public about the critical role of our communities' largely unknown guardians of public safety - our local code officials - who assure us of safe, efficient, and livable buildings that are essential to keep America great, and;

**Whereas,** Building Safety Month 2021 encourages appropriate steps everyone can take to ensure that the places where we live, learn, work, worship and play are safe, and recognizes that countless lives have been saved due to the implementation of safety codes by local and state agencies, and;

**Whereas,** each year, in observance of Building Safety Month, Americans are asked to consider the commitment to improve building safety and economic investment at home and in the community, and to acknowledge the essential service provided to all of us by local and state building departments, fire prevention bureaus and federal agencies in protecting lives and property.

**NOW, THEREFORE, I, Bev Smith, Mayor of the Village of Palm Springs, Florida, do hereby proclaim the month of May 2021 as:**

***"Building Safety Month"***

*In witness whereof I have herunto set my hand and caused the seal of this city to be affixed*

*Mayor* Beverly Smith

*Date* May 11, 2021

SEAL 1957 FLORIDA

# Village of Palm Springs

# Executive Brief

**AGENDA DATE:** May 13, 2021

**DEPARTMENT:** Administration

---

**ITEM 7.5:** Public Service Recognition Week Proclamation - May 2, 2021 - May 8, 2021

**SUMMARY:**

**FISCAL IMPACT:**

**ATTACHMENTS:**
Proclamation Public Service Recognition - May 2 - 8, 2021

*Office of the Mayor*

# Village of Palm Springs, Florida

# Proclamation

**WHEREAS,** the week of May 2nd through May 8th, 2021, has been designated as "Public Service Recognition Week" to honor all the employees of the Village of Palm Springs; and

**WHEREAS,** public service is a noble calling involving a variety of challenging and rewarding professions; and

**WHEREAS,** millions of individuals work in government service and as members of the uniformed services, in every State, county, and city across the United States and in hundreds of cities abroad; and

**WHEREAS,** the United States is a great and prosperous country, and public service employees contribute significantly to that greatness and prosperity; and

**WHEREAS,** Public Service Recognition Week provides an opportunity to recognize and promote the important contributions of all our Village of Palm Springs employees and to honor the diverse men and women who meet the needs of our community; and

**WHEREAS,** all the Village's public servants have worked and continue to work to help our Village, Palm Beach County, the State of Florida and the United States to overcome the challenges from the COVID–19 pandemic; and

**WHEREAS,** the Village of Palm Springs benefits daily from the knowledge and skills of the highly trained individuals who work within our local, municipal government; and

**WHEREAS,** the ability of the Village's employees enables our community to be responsive, innovative and effective and is a result of the outstanding performance of our dedicated public servants; and

**WHEREAS,** members of the Village of Palm Springs' uniformed services and civilian employees make significant daily contributions to our community and help to continuously grow and make our Village a better place to live, work and play.

**Now, therefore, I, Bev Smith,** Mayor for the Village of Palm Springs, and the entire Village Council and our community supports the designation of the week of **May 2nd through May 8th, 2021, as "Public Service Recognition Week"** and we commend all Village employees for their outstanding contributions to the Village of Palm Springs, including their unyielding dedication to, and enthusiasm for, the Village of Palm Springs.

SEAL 1957

*In witness whereof I have herunto set my hand and caused the seal of this city to be affixed*

*Mayor* Beverly Smith

*Date* May 11, 2021

# Village of Palm Springs

# Executive Brief

**AGENDA DATE:** May 13, 2021

**DEPARTMENT:** Finance

---

**ITEM 7.6:** Approve/Accept the Village of Palm Springs Comprehensive Annual Financial Report (CAFR) - FY 2020

**SUMMARY:**

Staff is requesting that the Village Council accept/approve the recently submitted 2019 Comprehensive Annual Financial Report (CAFR).

Mr. Scott Porter, with the audit firm of Caler, Donten, Levine, Cohen, Porter & Veil, P.A. will provide the Council with a detailed presentation on the 2020 Comprehensive Annual Financial Report (CAFR) and the Village's financial statements.

Additionally, Mr. Porter will distribute the updated "Communication With Those Charged with Governance" and the Financial Highlights brochure.

Note: A digital copy of the Village's FY 2020 CAFR will be posted to the Village's website in advance of the Council meeting.

**FISCAL IMPACT:**

**ATTACHMENTS:**

FY 2020 Comprehensive Annual Financial Report (CAFR)
FY 2020 Financial Highlights Brochure
FY 2020 Governance Report

# THE VILLAGE OF PALM SPRINGS, FLORIDA



# Comprehensive Annual Financial Report

**Fiscal Year Ended**
**September 30, 2020**

The cover photo this year is capturing Foxtail Palm Park, the newest addition to our neighborhood parks. Foxtail Palm Park was funded utilizing Community Development Block Grant funds, Palm Beach County Park funds, the Solid Waste Authority of Palm Beach County funding and Village funds.

This park includes a lake, walking path, playground, gazebo, picnic area, parking lot and landscaping. It will become part of our Pathway Connector Park as the Village continues the extension of that project linking a popular walking pathway to numerous Village parks.

This picture was taken by our Project Manager, Walter Sanchez. Walter joined the Village in 2019 and is actively involved in helping to keep our projects like Foxtail Palm Park on track to completion. Thank you, Walter!

Rebecca L. Morse
Chief Financial Officer

# THE VILLAGE OF
# PALM SPRINGS, FLORIDA

Comprehensive Annual
Financial Report

## Fiscal Year Ended
## September 30, 2020

**Prepared by:**
**Finance Department**

**Rebecca L. Morse, CGFO, CPFO**
**Chief Financial Officer**

# VILLAGE OF PALM SPRINGS, FLORIDA

COMPREHENSIVE ANNUAL FINANCIAL REPORT

SEPTEMBER 30, 2020

TABLE OF CONTENTS

**INTRODUCTORY SECTION**


Letter of Transmittal ..... **i**
List of Principal Officials ..... **v**
Organizational Chart ..... **vi**
GFOA Certificate of Achievement for Excellence in Financial Reporting ..... **vii**


**FINANCIAL SECTION**


Independent Auditor's Report ..... **1**
Management's Discussion and Analysis ..... **4**

BASIC FINANCIAL STATEMENTS:
- Government-Wide Financial Statements:
  - Statement of Net Position ..... **16**
  - Statement of Activities ..... **17**
- Fund Financial Statements:
  - Balance Sheet - Governmental Funds ..... **19**
  - Reconciliation of the Governmental Funds Balance Sheet to the Statement of Net Position ..... **20**
  - Statement of Revenues, Expenditures and Changes in Fund Balances - Governmental Funds ..... **21**
  - Reconciliation of the Statement of Revenues, Expenditures and Changes in Fund Balances of Governmental Funds to the Statement of Activities ..... **22**
  - Statement of Net Position - Enterprise Funds ..... **23**
  - Statement of Revenues, Expenses, and Changes in Net Position - Enterprise Funds ..... **24**
  - Statement of Cash Flows - Enterprise Funds ..... **25**
  - Statement of Fiduciary Net Position ..... **27**
  - Statement of Changes in Fiduciary Net Position ..... **28**
- Notes to Financial Statements ..... **29**

REQUIRED SUPPLEMENTARY INFORMATION:
- Budgetary Comparison Schedule - General Fund ..... **72**
- Notes to Budgetary Comparison Schedule ..... **76**
- Condition Rating of the Village's Street System ..... **77**
- Village Pension Trust Funds
  - Schedule of Changes in the Net Pension Liability and Related Ratios ..... **78**
  - Schedule of Village Contributions ..... **82**
- State of Florida Pension Plans
  - Schedule of the Village's Proportionate Share of the Net Pension Liability ..... **84**
  - Schedule of Village Contributions ..... **88**
- Schedule of Investment Returns for all Village Retirement Plans ..... **90**
- Schedule of Changes in the Total OPEB Liability and Related Ratios ..... **91**

# VILLAGE OF PALM SPRINGS, FLORIDA

COMPREHENSIVE ANNUAL FINANCIAL REPORT

SEPTEMBER 30, 2020


COMBINING FUND FINANCIAL STATEMENTS AND DEBT SCHEDULES:
- Nonmajor Governmental Funds:
  - Combining Balance Sheet ..... **92**
  - Combining Statement of Revenues, Expenditures and Changes in Fund Balances ..... **93**
- Fiduciary Funds:
  - Combining Statement of Fiduciary Net Position ..... **94**
  - Combining Statement of Changes in Fiduciary Net Position ..... **95**
- Schedules of Long-Term Debt to Maturity:
  - Combining Schedule of Debt Service Requirements (Principal and Interest) to Maturity ..... **96**
  - $6,477,462 General Obligation Note, dated February 24, 2012 ..... **97**
  - $14,352,351 Water and Sewer Promissory Note, dated April 15, 2013 ..... **98**

**STATISTICAL SECTION**

Financial Trends:
- Net Position by Component ..... **100**
- Changes in Net Position ..... **102**
- Governmental Activities Tax Revenues by Source ..... **106**
- Fund Balances of Governmental Funds ..... **107**
- Changes in Fund Balances of Governmental Funds ..... **109**
- General Governmental Tax Revenues by Source ..... **111**
- Assessed Value of Taxable Property ..... **112**

Revenue Capacity:
- Property Tax Rates - Direct and Overlapping Governments ..... **113**
- Principal Property Taxpayers ..... **114**
- Property Tax Levies and Collections ..... **116**
- Water and Sewer Revenue Base ..... **117**

Debt Capacity:
- Ratios of Outstanding Debt by Type ..... **118**
- Ratios of General Bonded Debt Outstanding ..... **119**
- Direct and Overlapping Governmental Activities Debt ..... **120**
- Water and Sewer Utility Pledged Revenue Coverage ..... **121**

Demographic and Economic Information:
- Demographic and Economic Statistics ..... **122**
- Principal Employers ..... **123**

Operating Information:
- Full-time Equivalent Village Government Employees by Function ..... **124**
- Operating Indicators by Function ..... **125**
- Capital Asset Statistics by Function ..... **127**
- Schedule of Insurance in Force ..... **129**

# VILLAGE OF PALM SPRINGS, FLORIDA

COMPREHENSIVE ANNUAL FINANCIAL REPORT

SEPTEMBER 30, 2020

**COMPLIANCE SECTION**


Independent Auditor's Report on Internal Control Over Financial Reporting and on Compliance and Other Matters Based on an Audit of Financial Statements Performed in Accordance with *Government Auditing Standards* ..... **130**
Schedule of Expenditures of Federal Awards ..... **132**
Notes to Schedule of Expenditures of Federal Awards ..... **133**
Independent Auditor's Report on Compliance for Each Major Federal Program and on Internal Control Over Compliance Required by the Uniform Guidance ..... **134**
Schedule of Findings and Questioned Costs - Federal Award Programs ..... **136**
Management Letter in Accordance with the Rules of the Auditor General of the State of Florida ..... **138**
Independent Accountant's Report on Investment Compliance in Accordance with the Rules of the Auditor General of the State of Florida ..... **140**

# INTRODUCTORY SECTION

# Village of Palm Springs
## Department of Finance
226 Cypress Lane,
Palm Springs, Fl. 33461-1699
(561) 965-4013 Fax (561) 304-4615


April 26, 2021

***The Honorable Mayor, Members of the Village Council and Residents of the Village of Palm Springs***

The Finance Department is pleased to present the Village's Comprehensive Annual Financial Report (CAFR) for the fiscal year ended September 30, 2020, which also includes the Independent Auditors' Report. The CAFR has been prepared in accordance with the Village Charter, Florida State Statutes and U.S. generally accepted accounting principles (GAAP) for governments. All disclosures necessary to enable the reader to gain an understanding of the Village's financial condition and activities have been included.

Responsibility for both the accuracy of the data and the completeness and fairness of the presentation, including all disclosures, rests with the Village. The Village's financial operations are designed with a comprehensive system of internal controls established to safeguard assets from loss, theft or misuse. The Village's internal control system is designed to provide reasonable, reliable financial records for use in preparing financial statements in accordance with U.S. generally accepted accounting principles. To the best of our knowledge and belief the presented data is accurate in all material respects, and is organized in a manner designed to fairly present the financial position and results of operations of the Village as measured by the financial activity of its various funds and the Village as a whole.

Florida Statutes require an annual audit by independent certified public accountants. Caler, Donten, Levine, Cohen, Porter & Veil, P.A. Certified Public Accountants, have issued an unmodified ("clean") opinion on the Village of Palm Springs' financial statements for the year ended September 30, 2020. The independent auditor's report on the basic financial statements and combining fund financial statements and debt schedules is located at page 1 in the financial section of this report.

**Report format**

This report has been prepared and organized to meet the requirements of the Government Finance Officers Association (GFOA) Certificate of Achievement for Excellence in Financial Reporting Program. By following the guidelines of this program, the report's format facilitates understanding by the residents as well as providing information needed by financial professionals.

The report is presented in four sections; Introductory, Financial, Statistical and Compliance. The Management's Discussion and Analysis (MD&A) located in the Financial Section following the independent auditor's report, together with this transmittal letter contain valuable information for the user of the financial statements and should be read in conjunction with them.

**Village profile**

The Village of Palm Springs was incorporated in 1957 and is centrally located in Palm Beach County. As part of South Florida's Gold Coast, Palm Beach County is well recognized for its unique lifestyle with a comfortable average year-round temperature of 76 degrees, 45 miles of beaches, 160 challenging golf courses and many cultural attractions. These elements and many more combine to create an unequaled quality of life that has attracted a diverse population from retirees to young professionals.

Palm Springs is an attractive, affordable community offering a mix of single family homes, townhomes and condominiums combined with all the services working families and retirees look for. As a full-service municipality, the Village strives to meet the needs and desires of the entire spectrum of residents by providing law enforcement, a public library, parks and recreation facilities and activities, sanitation and recycling services, water and sewer services, road and street maintenance and beautification as well as general government support services.

The Village's water treatment operations consist of two water treatment plants. The first plant, located within the Village, is a 6 million gallon treatment facility. The second plant, dedicated to former Public Service Director Robert L. Pratt, is located in unincorporated Palm Beach County and is a 3 million gallon treatment facility with expansion capabilities to 4 million gallons.

The Village's sewer treatment is handled through two connections to the East Central Regional Wastewater Treatment Facilities. The Village has agreements with Palm Beach County for one connection and with the City of Lake Worth for the second. As of September 30, 2020, our utility system had 20,300 water customers and 19,239 sewer customers. Approximately 60% of total connections serve our residents; the other 40% of our connections are in the unincorporated area.

The Village operates under a Council-Manager form of government. Four Council members are elected at large each representing a district in which they must reside. The Mayor is elected at large and may reside in any of the four districts. The Mayor and four council members are elected to serve four year overlapping terms. Day to day operation of the Village is under the direction of the Village Manager who is appointed by the Village Council.

**Economic outlook and financial planning**

The Village's population has increased 24%, from 18,928 in 2011 to the current estimate of 23,448. Over the same ten-year period the Village's assessed taxable value grew from $610,730,119 in 2011 to a new high of over $1.3 billion this year an increase of $714,085,755 or 169%. The taxable values increased by $103 million or 8.5% over fiscal year 2019. We believe the taxable values are back on the rise reflecting the stronger economy, on-going redevelopment and annexation efforts.

The Village was successful in our bid to create two community redevelopment districts (CRA); one for the Lake Worth Road area and the second for Congress Avenue north of Forest Hill Boulevard. The Village expects to spur re-development and new developments in these areas using tax increment financing. The tax increment financing (TIF) will be active for our fiscal year beginning October 1, 2020.

As of September 30, 2020, the General Fund had a total fund balance of $18,021,100. The components of fund balance, in accordance with GASB 54, are detailed as follows.

| | | |
|---|---|---|
| Total fund balance | $ | 18,021,100 |
| Nonspendable - Inventory | | 70,539 |
| Restricted for sales tax capital projects | | 4,172,367 |
| Assigned to: | | |
| Disaster recovery | | 3,000,000 |
| Capital projects | | 1,500,000 |
| Subsequent year's budget | | 1,183,000 |
| Unassigned fund balance | $ | 8,095,194 |

Fortunately, the Village has been very conservatively managed; the Village has assigned $3.0 million for disaster recovery and together with the $1.5 million assigned for large capital acquisitions or replacements prudently providing for the on-going operations of the Village and preparing for potential disasters or economic downturn.

The General Fund's unassigned fund balance represents 32% of the General Fund budget for fiscal year 2021. Our goal is to maintain this unassigned fund balance in the 20-25% range. The Village's purpose for building our fund balance to this level is to have adequate resources during the "rainy days." The Village will always seek to balance the budget with current resources, but we have prudently provided funds for potential economic fluctuations, as well as a financial hedge for the protection for our community.

The Village's 5-Year Capital Improvement Budget includes updates for the proposed years through FY 2024 and new capital items were added for FY 2025.

The Village evaluates one third of our roads and streets annually using a pavement rating system, based on this evaluation the Village budgets funds to maintain the roads and street network with at least 80% of the system rated at a good or better condition based on the pavement rating system. A schedule showing the annual expenditures for the last ten years to maintain this network is located on page 77 of this report.

The Village Council legally adopts a formal budget for the General Fund. The Village maintains budgetary control at the department level of expenditure. All expenditures in excess of $5,000 or more require the Village Manager's authorization, and expenditures over $25,000 require approval by the Village Council and/or competitive bid. Budget transfers within a department are handled administratively. The Village Council must approve budget transfers between departments or budget amendments, which increase or decrease the total fund. A schedule comparing the original budget, revised budget and actual revenues and expenditures is located on pages 72 – 76 of this report.

**Major initiatives**

In December, the police department held its 9th annual "Stuff-A-Cruiser" toy drive. The event was held to collect new, unused and unwrapped toys to benefit local and needy families during the holidays and was held on the Village's ballfields. This event showcased many of the department's resources and incorporated several external organizations and businesses. Several members represented the department including individuals from the Community Policing Unit, the Criminal Investigation Division, the Support Services Division, Reserve Officers, the Police Explorers and our Volunteer Coordinator. Over 1,000 people attended and more than $10,000 was raised to donate to the Salvation Army and Adopt-A-Family organizations. In addition, several hundred toys were donated and given to the Salvation Army for needy families. This was an event that required a great deal of preparation, organization and coordination of numerous people and resources. It was by far our most successful year yet.

Parks and Recreation renovated Sabal Palm Park installing new sidewalks, and a new restroom building and upgrading the parking lot and signage. The Village added Foxtail Palm Park utilizing Community Development Block Grant funding, Palm Beach County funding and Village funding. This new neighborhood park includes a lake, walking path, playground, picnic area, parking lot and landscaping. It will become connected to other parks throughout the Village as we continue the extension of our Pathway Connector Park linking a popular walking pathway to numerous Village parks.

In response to COVID, the Parks and Recreation department implemented an employee dependent Back to School Program from August 31 to November 7, 2020. This program was set up in order to provide Village staff members an on-site location for their children to perform distance learning activity. The Library took advantage of the COVID shutdown and used that time to upgrade fixtures to touchless, install plexiglass partitions around the front desk area and made other improvements to help protect and promote a safe Library environment for our staff and patrons. New hurricane shutters and replacement air conditioning units were purchased and installed this year.

Our Public Works department quickly geared up and became the COVID safety heroes. They installed numerous plexiglass partitions throughout the Village facilities, they installed multiple hand sanitizer solutions, touchless faucets, placed social distancing stickers in our public areas, kept the Village stocked with hand sanitizer, facial masks, gloves and all COVID safety supplies. They also purchased sanitizing fogger equipment, trained to use properly and then took on the new responsibility of routinely disinfecting all Village facilities.

To promote economic development, the Village continued its popular Property Improvement Grant Program. This is a matching grant of up to 50% (up to $5,000) for improvements to residential and commercial property structures. The improvement project must include construction/renovation of the street facing façade of the building or driveway. Now in its sixth year, the Village granted 12 awards totaling $117,960 in improvements and $48,954 was distributed as the Village match.

The Village Council was successful in creating a Community Redevelopment Agency (CRA) in 2020. To administer the activities and programs that can be offered within community redevelopment areas pursuant to Chapter 163, Part III, Florida Statutes, the Village adopted Finding of Necessity reports for two proposed CRA districts on March 28, 2019. On September 16, 2019, the Palm Beach County Board of County Commissioners delegated redevelopment powers conferred by these statutes to the Palm Springs Village Council, with conditions that are outlined in an interlocal agreement. On November 14, 2019, the Village Council created a CRA with two districts (Congress Avenue and Lake Worth Road) via Ordinance 2019-19. The CRA, as a dependent special district, will be included in the Village's budget as a major fund beginning in 2021. The first tax increment revenues will not be received by the CRA until January 2021. The Village Council approved the CRA's request to fund initial expenses, such as the annual special district fee.

**Awards**

The Government Finance Officers Association of the United States and Canada (GFOA) awarded a Certificate of Achievement for Excellence in Financial Reporting to the Village of Palm Springs for its Comprehensive Annual Financial Report for the fiscal year ended September 30, 2019.

In order to be awarded a Certificate of Achievement, a government unit must publish an easily readable and efficiently organized comprehensive annual financial report, the contents of which conform to program standards. Such reports must satisfy both U.S. generally accepted accounting principles and applicable legal requirements.

A Certificate of Achievement is valid for one year only. The Village of Palm Springs has received a Certificate of Achievement for the last thirty-two consecutive years (fiscal years ended 1988-2019). We believe our current report continues to conform to the Certificate of Achievement program requirements, and we are submitting it to GFOA.

**Acknowledgements**

No one will forget how our lives were impacted by COVID-19, schools and businesses shut-down, social and recreational activities were canceled, we were shut out of loved one's lives and we lost loved ones and friends.

What I am proud of is how the Village responded. We kept our Village services running, we adapted and found new ways to provide our services and we geared up to disinfect, sanitize and protect our employees, and our residents. We became innovators and offered space to enable our employees to work safely and keep their children actively participating in remote learning. The Village Council did not shut down our operations but enabled every employee to be able to work and maintain their financial stability during all the COVID uncertainty. This is just another example of why we call Palm Springs "A Great Place to Call Home".

My amazing Finance staff, Mariana Ortega, Sylvia Ward, Nataly Cintron and Pisurki Rodriguez continued to give their best every day in every situation and adapted to find new ways to rise to the new challenges COVID presented utilizing more paperless processing and making many decisions professionally and personally to be champions of Finance in a safe work environment. They are a special group of talented, devoted individuals that serve the Village with honor and integrity.

Respectfully submitted,



Rebecca L. Morse, CGFO, CPFO
Chief Financial Officer

# VILLAGE OF PALM SPRINGS, FLORIDA

## LIST OF PRINCIPAL OFFICIALS

## SEPTEMBER 30, 2020

| Title | Name |
|---|---|
| Mayor | Bev O. Smith |
| Vice Mayor | Patti Waller |
| Mayor Pro-Tem | Gary Ready |
| Council Member | Joni Brinkman |
| Council Member | Doug Gunther |
| Village Manager | Richard J. Reade |
| Chief Financial Officer | Rebecca L. Morse |
| Public Services Director | Ron Eyma |
| Public Safety Director | Tom Ceccarelli |
| Village Clerk | Kimberly Wynn |
| Library Director | Suvi Manner |
| Parks & Recreation Director | Justin Lucas |
| Planning, Zoning and Building Director | Kimberly Glas-Castro |
| Information Technology Director | Thomas Cook |
| Village Attorney | Glen J. Torcivia |

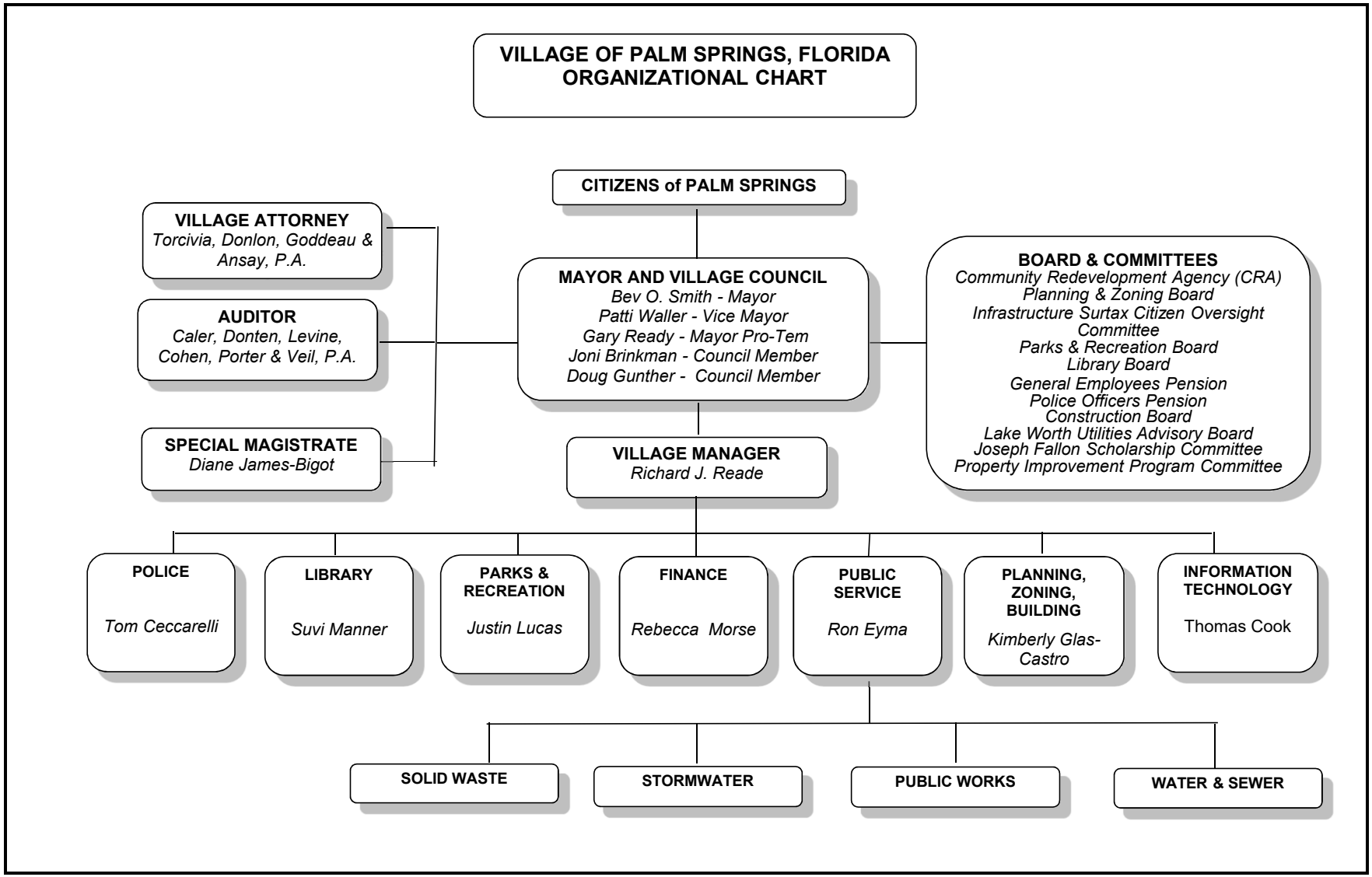
VILLAGE OF PALM SPRINGS, FLORIDA
ORGANIZATIONAL CHART
CITIZENS of PALM SPRINGS
VILLAGE ATTORNEY
Torcivia, Donlon, Goddeau & Ansay, P.A.
AUDITOR
Caler, Donten, Levine, Cohen, Porter & Veil, P.A.
SPECIAL MAGISTRATE
Diane James-Bigot
MAYOR AND VILLAGE COUNCIL
Bev O. Smith - Mayor
Patti Waller - Vice Mayor
Gary Ready - Mayor Pro-Tem
Joni Brinkman - Council Member
Doug Gunther - Council Member
BOARD & COMMITTEES
Community Redevelopment Agency (CRA)
Planning & Zoning Board
Infrastructure Surtax Citizen Oversight Committee
Parks & Recreation Board
Library Board
General Employees Pension
Police Officers Pension
Construction Board
Lake Worth Utilities Advisory Board
Joseph Fallon Scholarship Committee
Property Improvement Program Committee
VILLAGE MANAGER
Richard J. Reade
POLICE
Tom Ceccarelli
LIBRARY
Suvi Manner
PARKS & RECREATION
Justin Lucas
FINANCE
Rebecca Morse
PUBLIC SERVICE
Ron Eyma
PLANNING, ZONING, BUILDING
Kimberly Glas-Castro
INFORMATION TECHNOLOGY
Thomas Cook
SOLID WASTE
STORMWATER
PUBLIC WORKS
WATER & SEWER

Government Finance Officers Association

# Certificate of Achievement for Excellence in Financial Reporting

Presented to

**Village of Palm Springs**
**Florida**

For its Comprehensive Annual
Financial Report
For the Fiscal Year Ended

September 30, 2019

Christopher P. Morrill

Executive Director/CEO

# FINANCIAL SECTION

CALER, DONTEN, LEVINE,
COHEN, PORTER & VEIL, P.A.

CERTIFIED PUBLIC ACCOUNTANTS

WILLIAM K CALER, JR , CPA
LAURA E CLARK, CPA
LOUIS M COHEN, CPA
JOHN C COURTNEY, CPA, JD
DAVID S DONTEN, CPA
JAMES B HUTCHISON, CPA
JOEL H LEVINE, CPA
PATRICK E MANGAN, CPA
JAMES F MULLEN, IV, CPA
MICHAEL J NALEZYTY, CPA
THOMAS A PENCE, JR , CPA
SCOTT L PORTER, CPA
MARK D VEIL, CPA
MARTIN R WOODS, CPA

505 SOUTH FLAGLER DRIVE, SUITE 900
WEST PALM BEACH, FL 33401-5948
TELEPHONE: (561) 832-9292

759 SW FEDERAL HIGHWAY, SUITE 301
STUART, FL 34994-1019
TELEPHONE: (772) 872-2123

info@cdlcpa com

MEMBERS
AMERICAN INSTITUTE OF
CERTIFIED PUBLIC ACCOUNTANTS

FLORIDA INSTITUTE OF
CERTIFIED PUBLIC ACCOUNTANTS

# Independent Auditor's Report

The Honorable Mayor and
Village Council
Village of Palm Springs, Florida

**Report on the Financial Statements**

We have audited the accompanying financial statements of the governmental activities, business-type activities, each major fund and the aggregate remaining fund information of the Village of Palm Springs, Florida, as of and for the year ended September 30, 2020, and the related notes to the financial statements, which collectively comprise the Village's basic financial statements as listed in the table of contents.

***Management's Responsibility for the Financial Statements***

Management is responsible for the preparation and fair presentation of these financial statements in accordance with U.S. generally accepted accounting principles; this includes the design, implementation, and maintenance of internal control relevant to the preparation and fair presentation of financial statements that are free from material misstatement, whether due to fraud or error.

***Auditor's Responsibility***

Our responsibility is to express opinions on these financial statements based on our audit. We conducted our audit in accordance with U.S. generally accepted auditing standards and the standards applicable to financial audits contained in *Government Auditing Standards*, issued by the Comptroller General of the United States. Those standards require that we plan and perform the audit to obtain reasonable assurance about whether the financial statements are free from material misstatement.

An audit involves performing procedures to obtain audit evidence about the amounts and disclosures in the financial statements. The procedures selected depend on the auditor's judgment, including the assessment of the risks of material misstatement of the financial statements, whether due to fraud or error. In making those risk assessments, the auditor considers internal control relevant to the entity's preparation and fair presentation of the financial statements in order to design audit procedures that are appropriate in the circumstances, but not for the purpose of expressing an opinion on the effectiveness of the entity's internal control. Accordingly, we express no such opinion. An audit also includes evaluating the appropriateness of accounting policies used and the reasonableness of significant accounting estimates made by management, as well as evaluating the overall presentation of the financial statements.

We believe that the audit evidence we have obtained is sufficient and appropriate to provide a basis for our audit opinions.

***Opinions***

In our opinion, the financial statements referred to above present fairly, in all material respects, the respective financial position of the governmental activities, the business-type activities, each major fund and the aggregate remaining fund information of the Village of Palm Springs, Florida, as of September 30, 2020, and the respective changes in financial position, and, where applicable, cash flows thereof for the year then ended in accordance with U.S. generally accepted accounting principles.

***Other Matters***

*Required Supplementary Information*

U.S. generally accepted accounting principles require that the management's discussion and analysis on pages 4 through 15, the budgetary comparison information on pages 72 to 76, the condition rating of the Village's street system on page 77, the pension information on pages 78 through 90, and the other postemployment benefits information on page 91, be presented to supplement the basic financial statements. Such information, although not a part of the basic financial statements, is required by the Governmental Accounting Standards Board, who considers it to be an essential part of financial reporting for placing the basic financial statements in an appropriate operational, economic, or historical context. We have applied certain limited procedures to the required supplementary information in accordance with U.S. generally accepted auditing standards, which consisted of inquiries of management about the methods of preparing the information and comparing the information for consistency with management's responses to our inquiries, the basic financial statements, and other knowledge we obtained during our audit of the basic financial statements. We do not express an opinion or provide any assurance on the information because the limited procedures do not provide us with sufficient evidence to express an opinion or provide any assurance.

*Other Information*

Our audit was conducted for the purpose of forming opinions on the financial statements that collectively comprise the Village's basic financial statements. The introductory section, the combining fund financial statements and debt schedules, and the statistical section are presented for purposes of additional analysis and are not a required part of the basic financial statements. The Schedule of Expenditures of Federal Awards is presented for purposes of additional analysis as required by Title 2 U.S. *Code of Federal Regulations* Part 200, *Uniform Administrative Requirements, Cost Principles, and Audit Requirements for Federal Awards*, and is also not a required part of the basic financial statements.

The combining fund financial statements, debt schedules and the Schedule of Expenditures of Federal Awards are the responsibility of management and were derived from and relate directly to the underlying accounting and other records used to prepare the basic financial statements. Such information has been subjected to the auditing procedures applied in the audit of the basic financial statements and certain additional procedures, including comparing and reconciling such information directly to the underlying accounting and other records used to prepare the basic financial statements or to the basic financial statements themselves, and other additional procedures in accordance with U.S. generally accepted auditing standards. In our opinion, the combining fund financial statements, debt schedules and the Schedule of Expenditures of Federal Awards are fairly stated in all material respects in relation to the basic financial statements as a whole.

The introductory and statistical sections have not been subjected to the auditing procedures applied in the audit of the basic financial statements and, accordingly, we do not express an opinion or provide any assurance on them.

**Other Reporting Required by *Government Auditing Standards***

In accordance with *Government Auditing Standards*, we have also issued our report dated April 26, 2021, on our consideration of the internal control over financial reporting of the Village of Palm Springs, Florida, and on our tests of its compliance with certain provisions of laws, regulations, contracts, and grant agreements and other matters. The purpose of that report is solely to describe the scope of our testing of internal control over financial reporting and compliance and the results of that testing, and not to provide an opinion on the effectiveness of the Village's internal control over financial reporting or on compliance. That report is an integral part of an audit performed in accordance with *Government Auditing Standards* in considering the Village's internal control over financial reporting and compliance.

Caler, Donten, Levine,
Cohen, Porter & Veil, P.A.

West Palm Beach, Florida
April 26, 2021

# VILLAGE OF PALM SPRINGS, FLORIDA

## MANAGEMENT'S DISCUSSION AND ANALYSIS

As management of the Village of Palm Springs, we are presenting this discussion and analysis (MD&A) to provide a narrative overview and analysis of the financial activities of the Village for the fiscal year ended September 30, 2020. Please read it in conjunction with the accompanying transmittal letter beginning on page i and the accompanying basic financial statements.

## FINANCIAL HIGHLIGHTS

- The Village's total net position at September 30, 2020 is $94.6 million. Of this amount, $38.3 million (unrestricted net position) may be used to meet the Village's ongoing obligations to residents and creditors.
- Governmental net position is $24.4 million, a net increase of $4.0 million from 2020 operations.
- Business-type net position was $70.2 million, a net increase of $3.9 million from 2020 operations.
- The total revenues from all sources were $41.0 million, a decrease of $1.3 million.
- The total cost of all Village programs was $33.1 million, a decrease of $0.5 million.
- For 2020, the Village's governmental funds revenues and other financing sources exceeded expenditures by $1,266,680.
- Revenues and other financing sources in the General Fund exceeded expenditures by $1,264,467.
- At the end of the current fiscal year, unassigned fund balance for the General Fund was $8,095,194, or 40.9% of total General Fund expenditures.
- The Village's total noncurrent liabilities decreased by $777,000 during the current fiscal year. The Village governmental activities long-term liabilities increased by $160,000 and the business activities long-term liabilities decreased by $937,000. The decreases are primarily attributable to principal payments on notes.
- The total OPEB liability increased $103,941 to $578,459 at September 30, 2020.

## OVERVIEW OF THE FINANCIAL STATEMENTS

This annual report consists of a series of financial statements including four components which are:

1. Government-wide financial statements which include the Statement of Net Position and the Statement of Activities. These statements provide information about the activities of the Village as a whole.
2. Fund financial statements tell how services were financed in the short term, as well as what remains for future spending. Fund financial statements also report the Village's operations in more detail than the government-wide statements by providing information about the Village's most significant funds.
3. Notes to the financial statements.
4. Other information.

### Government-wide Financial Statements

A frequently asked question regarding the Village's financial health is whether the year's activities contributed positively to the overall financial well-being. The Statement of Net Position and the Statement of Activities report information about the Village as a whole and about its activities in a way that helps answer this question. These statements include all assets and liabilities using the accrual basis of accounting, which is similar to the accounting used by most private-sector companies. All of the current year's revenues and expenses are taken into account, regardless of when cash is received or paid.

These two statements report the Village's net position and changes therein. Net Position is the result of assets plus deferred outflows of resources minus liabilities and deferred inflows of resources. Net Position is one way

to measure the Village's financial health, or financial position. Over time, increases or decreases in net position are an indicator of whether the financial health is improving or deteriorating. The Statement of Net Position and the Statement of Activities present information about the following:

- Governmental activities - All of the Village's basic services are considered to be governmental activities, including the Village Council, Village Manager, Village Clerk, Finance, Information Technology, Planning, Zoning and Building, Police, Sanitation and Recycling, Public Works (road and street maintenance), Library and Parks and Recreation Services. The Village's capital assets and general obligation debt are also included in the governmental activities.
- Business type activities/Enterprise Fund activities - The Village charges a fee to customers to cover all of the cost of the services provided. The Village's Water and Sewer Utility and Stormwater Utility are reported in this category.

**Fund Financial Statements**

The fund financial statements provide detailed information about the most significant funds - not the Village as a whole. Some funds are required to be established by State law. However, management establishes other funds, which aid in the management of money for particular purposes or meet legal responsibilities associated with the usage of certain taxes, grants and other money. The Village's three kinds of funds, *governmental, proprietary and fiduciary* use different accounting approaches as explained below.

- ***Governmental funds*** - Most of the Village's basic services are reported in the governmental funds. Governmental funds focus on how resources flow in and out, with the balances remaining at year-end that are available for spending. These funds are reported using an accounting method called the modified accrual accounting method, which measures cash and all other financial assets that can be readily converted to cash. The governmental fund statements provide a detailed short-term view of the Village's general governmental operations and the basic services it provides. Governmental fund information shows whether there are more or fewer financial resources that can be spent in the near future to finance the Village's programs. The Village of Palm Springs has three individual governmental funds. Information is presented separately in the governmental fund balance sheet and in the governmental fund statement of revenues, expenditures, and changes in fund balances for the General Fund. Data for the other two governmental funds are combined into a single, aggregated presentation. Individual fund data for each of these non-major governmental funds is provided in the form of combining statements on pages 92-93 of this report. The basic governmental fund financial statements can be found on pages 19-22 of this report.

- ***Proprietary funds*** - The Village has two enterprise funds: the Water and Sewer Utility Fund and the Stormwater Utility Fund, which was established in the prior year. The Water and Sewer Utility Fund and the Stormwater Utility Fund account for the operations of the water and wastewater utility and stormwater utility, respectively, and charge customers for the services it provides. Enterprise funds are reported on the full accrual basis of accounting in the same way that all activities are reported in the Statement of Net Position and the Statement of Activities. The basic enterprise fund financial statements can be found on pages 23-26 of this report.

- ***Fiduciary funds*** - Fiduciary funds are used to account for resources held for the benefit of parties outside the government. Fiduciary funds are not reflected in the government-wide financial statements because the resources of those funds are not available to support the Village's own programs. The Village maintains two fiduciary funds; the General Employees Pension Fund and the Police Officers Pension Fund. The accounting used for fiduciary funds is much like that used for enterprise funds. The basic fiduciary fund financial statements can be found on pages 27-28 of this report. Individual fund data for each of the pension funds is provided in the form of combining statements on pages 94-95 of this report.

### Notes to the Financial Statements

The notes to the financial statements are provided to communicate additional information that is essential to obtaining a comprehensive understanding of the data contained in the government-wide and fund financial statements. The notes to the financial statements are located on pages 29-71 of this report.

### Other Information

In addition to the basic financial statements and notes, this annual report also presents certain required supplementary information which includes a budgetary comparison schedule for the General Fund together with notes pertaining to the budget schedule. The Village also presents information in this section concerning the condition rating of its streets, progress in funding its obligation to provide pension benefits to its employees and its other postemployment benefits. Required supplementary information can be found on pages 72-91.

The combining fund financial statements of the nonmajor governmental funds and the combining fund financial statements of the fiduciary funds are presented on pages 92-95 of this report. Immediately following the combining fund financial statements, the Village includes schedules of long-term debt. These schedules detail the principal and interest payments due by issue and fiscal year through maturity. These schedules are located on pages 96-98 of this report.

The statistical section located on pages 99-129 of this report presents schedules providing details about the financial trends, revenue capacity, debt capacity, demographic, economic and operating information to assist the user in understanding the Village's financial statements and overall financial health.

## GOVERNMENT-WIDE FINANCIAL ANALYSIS

As noted earlier, net position may serve over time as a useful indicator of a government's financial position. In the case of the Village, assets and deferred outflows of resources exceeded liabilities and deferred inflows of resources by $94.6 million, approximately $7.9 million more than fiscal year 2019. The net position of the Village at September 30, 2020 and 2019 are summarized as follows:

**Village of Palm Springs**
**Net Position Summary**

| | Governmental Activities | | Business-type Activities | | Total Primary Government | |
|---|---|---|---|---|---|---|
| | 2020 | 2019 | 2020 | 2019 | 2020 | 2019 |
| **Assets:** | | | | | | |
| Current and other assets | $ 20,962,294 | $ 17,910,136 | $ 37,739,016 | $ 34,325,726 | $ 58,701,310 | $ 52,235,862 |
| Capital assets | 18,578,673 | 16,401,001 | 47,639,022 | 47,808,434 | 66,217,695 | 64,209,435 |
| **Total assets** | **$ 39,540,967** | **$ 34,311,137** | **$ 85,378,038** | **$ 82,134,160** | **$ 124,919,005** | **$ 116,445,297** |
| **Deferred Outflows of Resources:** | | | | | | |
| Deferred amount related to pensions | $ 3,529,065 | $ 4,217,657 | $ 877,034 | $ 1,460,950 | $ 4,406,099 | $ 5,678,607 |
| Deferred amount related to OPEB | 58,455 | 1,238 | 24,589 | 569 | 83,044 | 1,807 |
| **Total deferred outflows of resources** | **$ 3,587,520** | **$ 4,218,895** | **$ 901,623** | **$ 1,461,519** | **$ 4,489,143** | **$ 5,680,414** |
| **Liabilities:** | | | | | | |
| Noncurrent liabilities | $ 15,791,987 | $ 15,631,314 | $ 13,181,023 | $ 14,118,263 | $ 28,973,010 | $ 29,749,577 |
| Other liabilities | 1,134,954 | 862,221 | 2,175,982 | 2,321,733 | 3,310,936 | 3,183,954 |
| **Total liabilities** | **$ 16,926,941** | **$ 16,493,535** | **$ 15,357,005** | **$ 16,439,996** | **$ 32,283,946** | **$ 32,933,531** |
| **Deferred Inflows of Resources:** | | | | | | |
| Deferred amount on refunding | $ - | $ - | $ 89,466 | $ 96,576 | $ 89,466 | $ 96,576 |
| Deferred amount related to pensions | 1,790,226 | 1,645,145 | 607,756 | 730,659 | 2,397,982 | 2,375,804 |
| Deferred amount related to OPEB | 2,066 | - | 869 | - | 2,935 | - |
| **Total deferred inflows of resources** | **$ 1,792,292** | **$ 1,645,145** | **$ 698,091** | **$ 827,235** | **$ 2,490,383** | **$ 2,472,380** |
| **Net Position:** | | | | | | |
| Net investment in capital assets | $ 14,490,482 | $ 12,007,314 | $ 37,408,106 | $ 36,936,597 | $ 51,898,588 | $ 48,943,911 |
| Restricted for law enforcement | 54,669 | 54,669 | - | - | 54,669 | 54,669 |
| Restricted for debt service | 249,462 | 247,249 | - | - | 249,462 | 247,249 |
| Restricted for sales tax capital projects | 4,172,367 | 3,488,534 | - | - | 4,172,367 | 3,488,534 |
| Unrestricted | 5,442,274 | 4,593,586 | 32,816,459 | 29,391,851 | 38,258,733 | 33,985,437 |
| **Total net position** | **$ 24,409,254** | **$ 20,391,352** | **$ 70,224,565** | **$ 66,328,448** | **$ 94,633,819** | **$ 86,719,800** |

The largest portion of the Village's net position (54.9%) reflects its investment in capital assets (land, buildings, machinery and equipment), net of related debt used to acquire these assets. The Village uses these capital assets to provide services to citizens; therefore these assets are not available for future spending. Although the Village's investment in its capital assets is reported net of related debt, it should be noted that the resources needed to repay this debt must be provided from other sources, since the capital assets themselves cannot be used to liquidate these liabilities.

An additional portion of the Village's net position ($4.5 million or 4.7%) represents resources that are subject to external restrictions on how they may be used. The remaining balance of unrestricted net position ($38.3 million or 40.4%) may be used to meet the government's ongoing obligations to citizens and creditors.

At the end of the fiscal year, the Village has positive balances in all categories of net position, both for the government as a whole, as well as for its separate governmental and business-type activities.

The changes in net position of the Village for the years ended September 30, 2020 and 2019 are summarized as follows:

**Village of Palm Springs**
**Changes in Net Position**

| | Governmental Activities | | Business-type Activities | | Total Primary Government | |
|---|---|---|---|---|---|---|
| | 2020 | 2019 | 2020 | 2019 | 2020 | 2019 |
| **Revenues:** | | | | | | |
| **Program revenues:** | | | | | | |
| Charges for services | $ 3,244,219 | $ 4,283,643 | $ 21,614,837 | $ 21,337,337 | $ 24,859,056 | $ 25,620,980 |
| Operating grants and contributions | 240,254 | 541,996 | 6,902 | - | 247,156 | 541,996 |
| Capital grants and contributions | 1,019,323 | 382,266 | 134,188 | 732,102 | 1,153,511 | 1,114,368 |
| **General revenues:** | | | | | | |
| Property taxes | 4,905,214 | 4,593,448 | - | - | 4,905,214 | 4,593,448 |
| Utility service taxes | 2,790,188 | 2,782,726 | - | - | 2,790,188 | 2,782,726 |
| Franchise fees | 1,505,749 | 1,547,089 | - | - | 1,505,749 | 1,547,089 |
| Sales and use taxes | 3,792,719 | 4,055,851 | - | - | 3,792,719 | 4,055,851 |
| Business taxes | 394,669 | 386,375 | - | - | 394,669 | 386,375 |
| Intergovernmental, unrestricted | 851,029 | 952,709 | - | - | 851,029 | 952,709 |
| Investment revenues | 110,534 | 233,021 | 186,550 | 326,288 | 297,084 | 559,309 |
| Miscellaneous | 144,641 | 107,496 | 52,003 | 62,790 | 196,644 | 170,286 |
| **Total revenues** | **$ 18,998,539** | **$ 19,866,620** | **$ 21,994,480** | **$ 22,458,517** | **$ 40,993,019** | **$ 42,325,137** |
| **Expenses:** | | | | | | |
| **Program expenses:** | | | | | | |
| General government | $ 2,879,926 | $ 2,835,997 | $ - | $ - | $ 2,879,926 | $ 2,835,997 |
| Public safety | 9,446,884 | 9,970,520 | - | - | 9,446,884 | 9,970,520 |
| Physical environment | 1,173,626 | 1,075,033 | - | - | 1,173,626 | 1,075,033 |
| Transportation | 2,201,178 | 2,093,367 | - | - | 2,201,178 | 2,093,367 |
| Culture/Recreation | 1,644,442 | 1,986,225 | - | - | 1,644,442 | 1,986,225 |
| Interest on long-term debt | 124,680 | 133,416 | - | - | 124,680 | 133,416 |
| Water and sewer utility | - | - | 15,595,379 | 15,383,962 | 15,595,379 | 15,383,962 |
| Stormwater utility | - | - | 12,885 | 87,898 | 12,885 | 87,898 |
| **Total Expenses** | **$ 17,470,736** | **$ 18,094,558** | **$ 15,608,264** | **$ 15,471,860** | **$ 33,079,000** | **$ 33,566,418** |
| Change in net position before transfers | $ 1,527,803 | $ 1,772,062 | $ 6,386,216 | $ 6,986,657 | $ 7,914,019 | $ 8,758,719 |
| Transfers | 2,490,099 | 2,415,138 | (2,490,099) | (2,415,138) | - | - |
| Increase in net position | 4,017,902 | 4,187,200 | 3,896,117 | 4,571,519 | 7,914,019 | 8,758,719 |
| Net Position - October 1 | 20,391,352 | 16,204,152 | 66,328,448 | 61,756,929 | 86,719,800 | 77,961,081 |
| **Net Position - September 30** | **$ 24,409,254** | **$ 20,391,352** | **$ 70,224,565** | **$ 66,328,448** | **$ 94,633,819** | **$ 86,719,800** |

## Governmental Activities

**Revenues:** Governmental activities increased the Village's net position by $4,017,902. Charges for Services decreased by $1,039,424 over fiscal year 2019. The largest decreases were in Public Safety, police outside details decreased by $308,499 due to discontinued details for the school board and diminished details for

businesses that were closed due to COVID. Building permit activity declined by $647,248 primarily due to the impact COVID had on construction and improvements. Recreation fees went down by $149,440 due to cancelled sporting activities and smaller camp programs all due to COVID.

Operating grants and contributions decreased $301,742, compared to fiscal year 2019 due to final distributions from FEMA and State Aid grant funds received for Hurricane Irma that hit in August 2017 (fiscal year 2017) and Hurricane Dorian that hit in September 2019 (fiscal year 2019).

Capital grants and contributions totaled $1,019,323 in fiscal year 2020, an increase of $637,057 compared to fiscal year 2019. This year the Village received $697,588 in Community Development Block Grant (CDBG) funds for park development, $113,350 from Palm Beach County for the development of Foxtail Palm Park and $71,864 from the Solid Waste Authority for beautification. Both the Palm Beach County and the Solid Waste Authority grants are new funding sources not received in fiscal year 2019.

Property taxes increased by $311,766, or 6.8% over fiscal year 2019 due to the Village's taxable value increasing by $103,436,750 or 8.5% over fiscal year 2019 and the Village decided to maintain the same operating millage rate of 3.50 mills. Other taxes (utility, franchise, sales and use and business taxes) decreased $288,716 or 3.3% primarily due to the effects of the COVID-19 pandemic on the economy.

The Village's governmental activities revenues by source are summarized in the chart below showing the relative percentage of each revenue source to total governmental revenues.

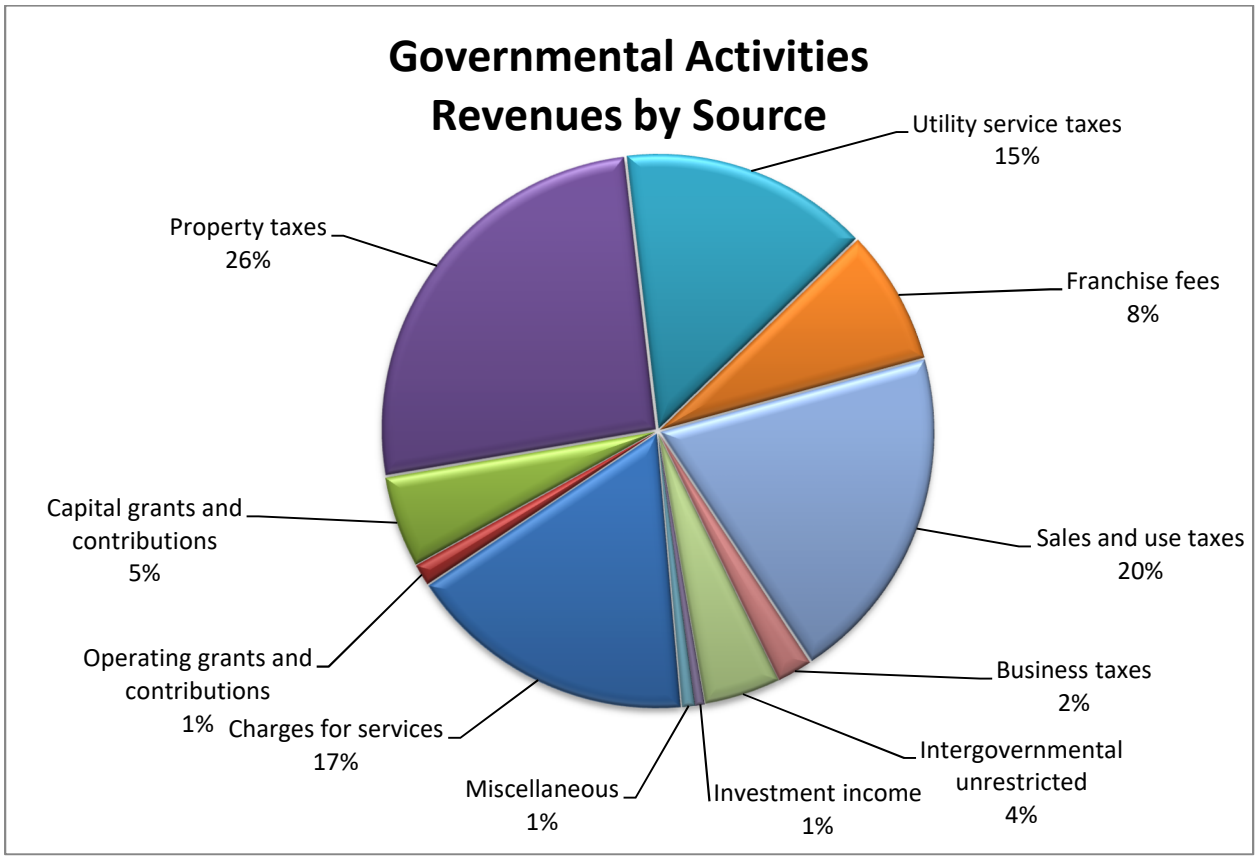


Ad valorem property taxes represented 26% of total governmental activity revenues this fiscal year which is 3% more than fiscal year 2019. Likewise, utility service taxes increased by 1% in fiscal year 2020, while franchise fees, and sales and use taxes were all the same percentage of total revenue as the prior year.

Revenues from capital grants and contributions increased by 3%, while operating grants and contributions and charges for service decreased 2% and 4%, respectively, over fiscal year 2019.

**Expenses:** The Village's programs include General Government, Public Safety, Physical Environment (sanitation and recycling), Transportation, and Culture/Recreation. General Government includes the legislative, executive, financial, information technology and other general operations of the Village. Public Safety includes police, and planning, building, zoning, licensing and code enforcement operations. Transportation includes our street maintenance and public works operations. Culture/Recreation includes our library, parks and recreation and special events.

General Government expenses increased $43,929 reflecting additional costs related to our expanded Information Technology department and expanded services needed to set up for remote working and virtual meetings.

Public Safety expenses decreased $523,636. Planning, Zoning and Building experienced decreased contractual services for inspections with the impact COVID had on construction projects. The Police details decreased significantly as businesses were shut down or operating fewer hours and the need for police details diminished accordingly. Also, the pension costs for the Village's Hazardous Employee pension decreased significantly with improved plan performance and vehicle repair and maintenance decreased as the Village's program to update the police vehicle fleet is reaping the benefit of reduced repair costs with a newer fleet.

Physical Environment expenses increased $98,593 reflecting increased costs for waste disposal.

Transportation expenses increased $107,811 for fiscal year 2020 compared to fiscal year 2019, which reflects increased expenditures for maintenance as the department had increased personnel costs with additional overtime hours for the routine disinfecting of the Village facilities. The Village has a policy to maintain at least 80% of our street system at a good or better condition as determined by the annual payment ratings. More information on the Village's Street System and condition rating can be found on page 77 of this report.

Culture and recreation experienced a decrease in expenses of $341,783 for fiscal year 2020 compared to fiscal year 2019, due to reduced staffing costs for camp activities and contractual services for sports officials and recreation activities that were all cancelled or significantly reduced due to the impacts of COVID on all activities.

Below is a schedule presenting the net cost of each program (total cost, less revenues generated by the activities). The net cost shows the extent to which the Village's general revenues support each of the Village's programs.

**Village of Palm Springs**

**Governmental Activities - Net Cost of Services**

| | Total Cost of Services | | Program Revenues | | Net Cost of Services | |
|---|---|---|---|---|---|---|
| | 2020 | 2019 | 2020 | 2019 | 2020 | 2019 |
| General Government | $ 2,879,926 | $ 2,835,997 | $ (1,024,636) | $ (1,241,747) | $ 1,855,290 | $ 1,594,250 |
| Public Safety | 9,446,884 | 9,970,520 | (1,130,318) | (2,063,287) | 8,316,566 | 7,907,233 |
| Physical Environment | 1,173,626 | 1,075,033 | (1,147,478) | (1,135,863) | 26,148 | (60,830) |
| Transportation | 2,201,178 | 2,093,367 | (198,607) | (208,473) | 2,002,571 | 1,884,894 |
| Culture/Recreation | 1,644,442 | 1,986,225 | (1,002,757) | (558,535) | 641,685 | 1,427,690 |
| Interest on long-term debt | 124,680 | 133,416 | - | - | 124,680 | 133,416 |
| **Totals** | **$ 17,470,736** | **$ 18,094,558** | **$ (4,503,796)** | **$ (5,207,905)** | **$ 12,966,940** | **$ 12,886,653** |

The total cost of all governmental activities this year was $17.5 million, representing a decrease of $624,000 or 3.4%. The previous schedule shows that $4.5 million of the cost of services was paid by those who directly benefited from the programs and the remainder of $13.0 million was financed through general revenues.

Expenses and the related program revenues are compared below:

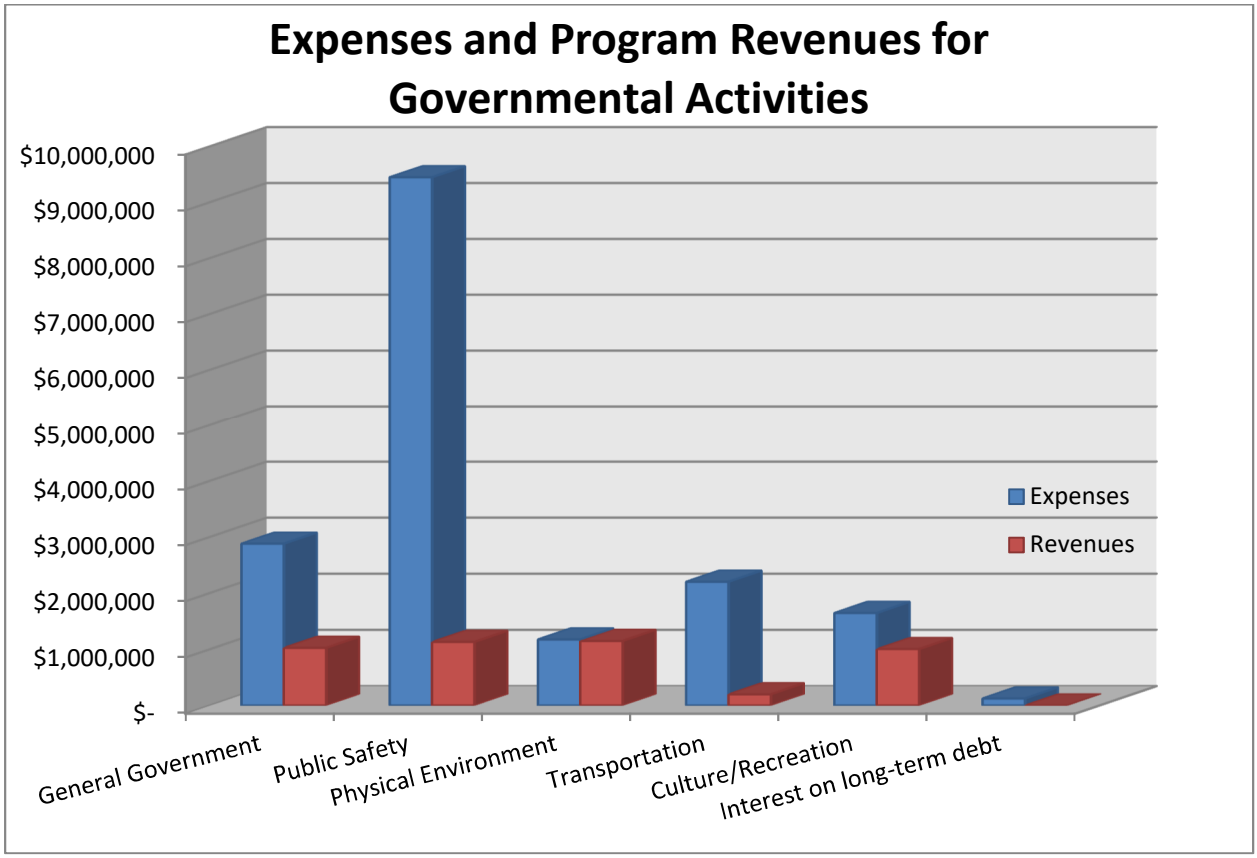


**Business-type Activities**

The net position of the proprietary funds (Water and Sewer Utility and Stormwater Utility) at September 30, 2020 was $70.2 million. The cost of providing proprietary (business-type) activities this year was $15.6 million, as shown in the Statement of Activities, this is an increase of $136,404 compared to fiscal year 2019, which includes $314,500 in increased wastewater treatment/disposal fees paid to the City of Lake Worth and Palm Beach County for our two connections to the East Central Regional Sewage Treatment Plant, less savings in professional fees of $104,454 from reduced fees related to the rate study and other professional studies that were done in fiscal year 2019. The Village last year expended over $64,000 in refunds to customers for mis-read meters, that did not occur in FY2020 adding to the reduced expenses.

The Village Stormwater Utility was established in 2017 and ended the current year with a net position of $1,321,760 or $513,342 over fiscal year 2019. This increase reflects the stormwater fees collected via non-ad valorem assessment of $519,265 and net operating expenses of $12,885

.

Net position increased $3,896,117 for the two enterprise funds combined. The following graph shows the source of revenues for the Water and Sewer Utility and the Stormwater Utility for the current fiscal year. Revenues derived from charges for services increased by $277,500 or 1.3%, reflecting slight increase in usage compared to fiscal year 2019, possibly related to more time in the home related to COVID shutdowns. Operating grants and contributions increased $6,902 reflecting a hazard mitigation grant received from the State. Capital Grants and Contributions decreased $597,914 reflecting a decrease in new service connections primarily due to the effects of the COVID-19 pandemic on local construction.

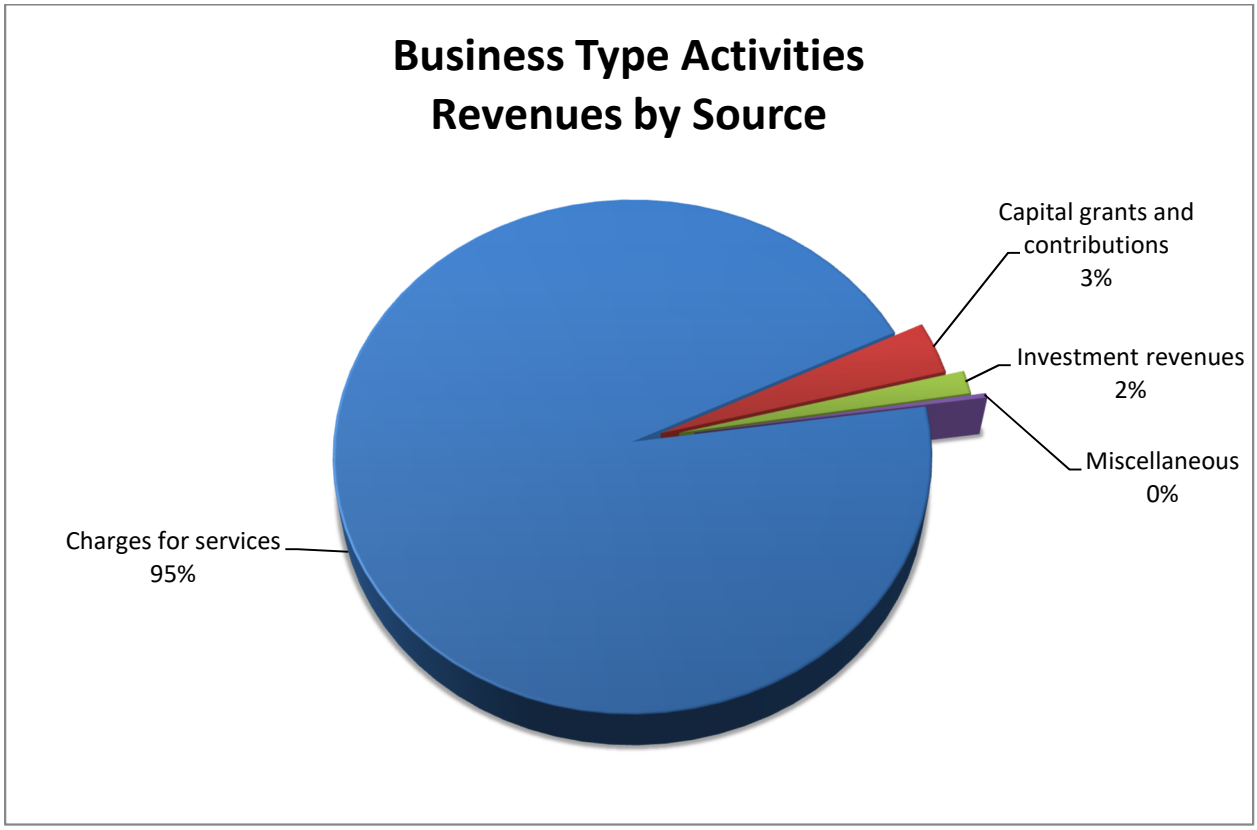


## FINANCIAL ANALYSIS OF THE VILLAGE'S FUNDS

The Village uses fund accounting to ensure and demonstrate compliance with finance related legal requirements.

### Governmental Funds

The governmental funds report on the same functions as the governmental activities in the government-wide statements but the focus of the governmental funds is to provide information on near-term inflows, outflows and balances of spendable resources available at fiscal year-end. This information is useful in evaluating the Village's financing requirements. The unassigned fund balance may serve as a useful measure of a government's net resources available for spending at the end of the fiscal year.

As of the end of the current fiscal year, the Village's governmental funds reported combined ending fund balances of $18,325,231, an increase of $1,266,680 in comparison with the prior year. The increase in fund balance was approximately half the prior year increase of $2,529,857 which was due primarily to the effects of the COVID pandemic on the Village. Revenues decreased $948,676. Property tax revenue increased $311,766 due to the increased taxable value, and franchise, sales and utility taxes decreased due to lower economic activity resulting from the COVID-19 pandemic. Building permit revenues decreased by $648,543 as new building projects declined significantly during the pandemic. Intergovernmental revenues decreased $65,510, due to an increase of $450,066 primarily due to reimbursements from FEMA for Hurricane Irma expenses, less decreases in State revenue (revenue sharing, half cent sales tax) of $217,000, a decrease in one cent surtax revenue of $87,000 and local option gas taxes also decreased by $49,000, all reflecting the impact of the pandemic. Charges for services decreased by $257,658 primarily due to police outside details decreasing $308,499 due to discontinued details for the school board and diminished details for businesses that were closed due to COVID, also, Parks and Recreation fees decreased by $149,440 because of reduced or cancelled

recreational and camp activities. These decreases were offset slightly by an increase of $119,276 in IT service fees with an expanded IT department and user fees charged to the Water and Sewer Enterprise Fund, building plan review fees also increased slightly or $66,701.

In fiscal year 2020 expenditures for the governmental funds increased by $402,879 compared to fiscal year 2019. General Government expenditures increased $221,822 or 9.4%, primarily due to increases in contractual services for new and increased services for software including, Neogov HR software, new messaging archive software, CISCO security umbrella, and monthly usage fees for NOVAtime electronic timekeeping software. Public Safety experienced a decrease of $732,870 or 7.5% which reflects the reduction in employer contribution required for the Village's Hazardous Pension due to improved plan performance. Physical Environment costs increased by $98,593 due to increased rates charged by the Village's contractual garbage hauler. Expenditures for Transportation increased $152,042 compared to fiscal year 2019 reflecting the increased funds expended in the current fiscal year for purchases of personal protection supplies, including masks, hand sanitizer and disinfecting supplies needed to keep the Village employees and facilities protected from the pandemic. Culture/Recreation experienced a decrease in expenditures of $189,631 reflecting the cancellation of Village recreation programs due to the COVID-19 pandemic.

The governmental funds had a total fund balance of $18,325,231 comprised of non-spendable fund balance of $70,539 for inventory; restricted fund balance of $4,476,498 ($54,669 for law enforcement, $249,462 for debt service, and $4,172,367 for infrastructure capital projects financed by the one-cent sales tax); assigned fund balances of $3,000,000 for disaster recovery; $1,500,000 assigned for future capital projects; and, $1,183,000 for the 2020/2021 budget. The balance of $8,095,194 is unassigned.

The primary operating fund for the Village is the General Fund. At the end of the current fiscal year, in accordance with GASB statement 54 the unassigned fund balance of the General Fund was $8,095,194, while the total fund balance was $18,021,100. The unassigned fund balance in the General Fund represents 31.9% of the fiscal year 2021 budgeted expenditures. The unassigned fund balance at fiscal year-end 2019 represented 28.6% of the 2020 final budget. The Village's target balance range for unassigned fund balance is 20-25%.

**Proprietary Funds**

The Village has two proprietary funds, which are both enterprise funds. Enterprise funds present the same functions presented as business-type activities in the government-wide financial statements, but in more detail. The Village of Palm Springs uses an enterprise fund to account for its Water and Sewer Utility operations and its Stormwater Utility operations.

Unrestricted net position for the Water and Sewer Enterprise Fund was $32.1 million at fiscal year-end, an increase of $3,153,021 over the prior fiscal year. Charges for services revenues increased $140,488 reflecting a slight increase in consumption.

Revenues from capital contributions decreased from $732,102 in 2019 to $134,188 in 2020 reflecting the significant decline in construction of new residential and commercial developments due to the COVID-19 pandemic. Operating expenses increased $154,643 which reflects increased utility costs paid to Palm Beach County and Lake Worth for the treatment and disposal of wastewater. Total net position for the Water and Sewer Enterprise Fund was $68.9 million at fiscal year-end, an increase of $3,382,775 from the prior fiscal year. The increase in net position from operations was $5,793,838 (operating income).

The Stormwater Utility is now in its third year of operations and had operating revenues of $519,265 and operating expenses of $12,885 for 2020. The Stormwater Utility net position increased by $513,342 and ended the fiscal year at $1,321,760.

## GENERAL FUND BUDGETARY HIGHLIGHTS

There were no differences between the total original budget and the final amended budget of $28,347,038 for the current fiscal year, however there were changes in various departmental revenues and expenditures as follows:

- General Fund revenues were under budget by $1,671,104. Revenues from taxes exceeded the budget by $8,935 with increased property tax revenues from rising property values, new development, and annexations. Franchise fees and business taxes decreased and were under budget by $24,251 and $7,331, respectively, due to the effects of the pandemic on the economy. Permits generated $642,186 less than anticipated as projects came to a halt during the pandemic. Intergovernmental revenues were less than budget by $641,587 due to reductions in State shared revenues form sales taxes, gas taxes and other revenues affected by the pandemic. Charges for services were less than budget by $275,264 primarily due to the cancellation of recreation activities due to the pandemic. Fines and forfeitures were less than budgeted revenues by $145,292 due to a reduction in fines related to local ordinance violations. Miscellaneous income exceeded the budget by $28,688 reflecting lower than expected interest income ($109,466) due to lower market interest rates net higher other miscellaneous revenues ($151,759) attributable to sales of capital assets utilizing a new auction company and insurance reimbursements.
- General Fund expenditures were $8,554,832 less than the budget for fiscal year 2020. General government departments in total expended $691,001 less than budgeted due to staffing vacancies, and unexpended capital outlay. Public Safety (Police department and the Planning, Zoning and Building Department) expended $3,601,263 less than expected due to staffing vacancies and unexpended capital outlay. Expenditures in Transportation were $1,023,258 less than anticipated with savings in operating costs and unexpended capital outlay. Culture and Recreation expenditures were $3,234,051 less than budgeted primarily due to capital projects that were not completed.

## CAPITAL ASSET AND DEBT ADMINISTRATION

**Capital Assets:** The Village of Palm Springs' investment in capital assets for its governmental and business type activities as of September 30, 2020, amounts to $66,217,695 (net of accumulated depreciation). This investment in capital assets includes land, buildings, improvements, machinery and equipment, library books, software, roads, sidewalks, bridges, drainage and intangible assets. The governmental activities investment in capital assets increased by $2,177,672, or 13.3% compared to fiscal year 2019. The net change includes an increase in assets of $2,773,169 less an increase of $595,497 in accumulated depreciation.

Buildings increased $236,492 including a new roof on the VFW, Library renovations, and a new restroom building for Sabal Palm Park.

Improvements other than buildings increased $897,116 for the conversion of tennis courts to pickleball courts and futsal courts, a new shade structure for Royal Palm Park, and the new Foxtail Palm Park.

Machinery and equipment increased $1,204,285 less disposals for a net increase of $495,648, including $586,044 in police vehicles, $60,379 for Public Works vehicles and $93,303 for library furnishings. The Village added a larger number of laptops to address the increased need for remote capabilities due to the pandemic and the remaining purchases represent replacement items including desktops, laptops, and security access equipment.

Infrastructure increased $875,641 including paving costs for paving of Canal 11 road, improving it from a shell rock roadway when it was annexed from Palm Beach County.

Construction in progress increased $223,589, including park improvements, planning and design costs to expand the existing Police Department and a storage building for Maintenance equipment. A total of 6 projects were in progress at fiscal year-end.

The Village uses the modified approach for infrastructure reporting of its street system. The Village's policy is to maintain at least 80% of its street system in *good* or *better* condition using the Asphalt Pavement Rating categories of the Asphalt Institute. The rating completed through the most recent year continues to meet or exceed Village policy. For 2020 the estimated maintenance costs were $425,000 and the actual were $257,990. More information on the Village's Street System and condition rating can be found on page 77 of this report.

Business-type activities net investment in capital assets decreased by $169,412 or 0.4% from fiscal year 2019. This amount is net of an increase of $2,568,849 in accumulated depreciation. The increase includes $344,169 in radio read meters installed to upgrade our meter reading system from touch read meters to radio read meters, $147,230 spent to rehabilitate 3 raw water wells, two spiractors at our Pratt Water Treatment plant were replaced at a cost of $947,446, $254,180 in wastewater lining to prevent infiltration, $129,875 in vehicle replacements, $155,995 for a front-end loader, and $330,732 for three stormwater improvement projects. Construction in progress decreased $617,502 or 39.5% with 25 projects in progress at fiscal year-end.

Additional detailed information on capital assets is presented in Note 4 to the financial statements. Capital assets at September 30, 2020 and 2019 are summarized as follows:

**Village of Palm Springs**
**Capital Assets Net of Depreciation**

| | Governmental Activities | | Business-type Activities | | Total Primary Government | |
|---|---|---|---|---|---|---|
| | 2020 | 2019 | 2020 | 2019 | 2020 | 2019 |
| Land | $ 729,641 | $ 729,641 | $ 379,987 | $ 379,987 | $ 1,109,628 | $ 1,109,628 |
| Buildings | 9,523,547 | 9,287,055 | 3,540,154 | 3,512,106 | 13,063,701 | 12,799,161 |
| Improvements other than buildings | 4,405,981 | 3,508,865 | 91,652,005 | 89,215,125 | 96,057,986 | 92,723,990 |
| Machinery, equipment & software | 7,125,607 | 6,629,959 | 6,307,703 | 6,084,760 | 13,433,310 | 12,714,719 |
| Library materials & software | 690,837 | 646,154 | - | - | 690,837 | 646,154 |
| Infrastructure | 5,532,268 | 4,656,627 | 553,693 | 224,625 | 6,085,961 | 4,881,252 |
| Intangible assets | - | - | 7,174,063 | 7,174,063 | 7,174,063 | 7,174,063 |
| Construction in progress | 1,079,711 | 856,122 | 944,570 | 1,562,072 | 2,024,281 | 2,418,194 |
| Total assets | 29,087,592 | 26,314,423 | 110,552,175 | 108,152,738 | 139,639,767 | 134,467,161 |
| Less accumulated depreciation | (10,508,919) | (9,913,422) | (62,913,153) | (60,344,304) | (73,422,072) | (70,257,726) |
| **Total** | **$ 18,578,673** | **$ 16,401,001** | **$ 47,639,022** | **$ 47,808,434** | **$ 66,217,695** | **$ 64,209,435** |

**Debt**: At fiscal year end, the Village had total long-term debt outstanding of $15,391,969 (excluding other postemployment benefits of $578,459 and net pension liability of $13,002,582), a decrease of $725,773, or 4.5% as compared to fiscal year 2019. Detailed information on the Village's long-term liabilities is presented in Notes 5, 9 and 10 to the financial statements. Long-term liabilities at September 30, 2020 and 2019 are summarized as follows:

**Village of Palm Springs**
**Long-Term Liabilities**

| | Governmental Activities | | Business-type Activities | | Total Primary Government | |
|---|---|---|---|---|---|---|
| | 2020 | 2019 | 2020 | 2019 | 2020 | 2019 |
| General Obligation Note | $ 4,088,191 | $ 4,393,687 | $ - | $ - | $ 4,088,191 | $ 4,393,687 |
| Promissory Note Payable | - | - | 10,141,450 | 10,775,261 | 10,141,450 | 10,775,261 |
| Compensated Absences | 901,978 | 738,722 | 260,350 | 210,072 | 1,162,328 | 948,794 |
| Other postemployment benefits | 398,452 | 325,253 | 180,007 | 149,265 | 578,459 | 474,518 |
| Net pension liability | 10,403,366 | 10,173,652 | 2,599,216 | 2,983,665 | 13,002,582 | 13,157,317 |
| **Total** | **$ 15,791,987** | **$ 15,631,314** | **$ 13,181,023** | **$ 14,118,263** | **$ 28,973,010** | **$ 29,749,577** |

The water and sewer 2003 revenue bonds were refinanced in April 2013 with a 20-year bank loan that also provided additional funds of $5 million for expansion of our wastewater lines. The interest rates on the 2003 revenue bonds ranged from 4.5% to 5.25% compared to the 2013 bank loan interest rate of 2.905%. Additional information on the Village's noncurrent liabilities can be found in Note 5, beginning on page 48 of this report.

In accordance with GASB Statement No. 68 the Village reported a net pension liability of $13,002,582, of which $10,403,366 is related to governmental activities and $2,599,216 is for business-type activities. For additional information on the Village's pension plans see Note 9, beginning on page 53 of this report.

The liability for other postemployment benefits (OPEB) increased $103,941 in 2020 to a total of $578,459, and represents the implicit rate subsidy in retiree health insurance rates. The increase reflects the latest actuarial valuation dated October 1, 2019 performed in accordance with GASB Statement No. 75. Additional information on other postemployment benefits can be found in Note 10, beginning on page 67 of this report.

## NEXT YEAR'S BUDGET AND ECONOMIC FACTORS

The Village's assessed taxable value increased for the seventh consecutive year since the fiscal year 2008 recession. In fiscal year 2011 the total taxable value was $610,730,119 and declined each year thereafter reaching a low of $579,568,060 in fiscal year 2013. This fiscal year our taxable value increased $103,436,750 or 8.5% over fiscal year 2019 for a total assessed value of $1,324,815,874 and now surpassing our record high value obtained in 2008 prior to the recession. We expect this trend to continue, but at a slower rate.

The Village Council maintained the 2019 operating millage rate of 3.50 mills for 2020 and lowered the debt service millage rate by 10.5%. Property tax collections increased $311,766 or 6.8% over fiscal year 2019, while the taxable value increased 8.5%.

For 2020, property taxes increased from 23% to 26% as a percentage of total revenue due to a decline in total revenue resulting from the COVID-19 pandemic. Similarly, revenue from utility service taxes increased by 1% of total revenue while franchise fees, sales and gas taxes all decreased in amount for 2020, but remained the same percentage of total revenue as fiscal year 2019. Overall, the revenue growth for the Village is expected to turn-around in 2021 as the economy recovers after the pandemic and is expected to increase sufficiently to keep pace with Village expenditure growth.

Effective October 1, 2009 (fiscal year 2010) the Village transferred fire rescue services to Palm Beach County Fire Rescue. Palm Beach County Fire Rescue MSTU (municipal services taxing unit) now taxes Village property owners 3.4581 mills per $1,000 of taxable value. This millage rate is deducted from the Village's legal millage rate limit of 10 mills, limiting our millage rate to $6.5419.

The General Fund's unassigned fund balance of $8,095,194 at September 30, 2020 represents 31.9% of the 2021 adopted budget of $25,368,987 which is above our target range of 20-25%. The Village Council has prudently assigned $3.0 million dollars of the General Fund's fund balance for disaster recovery and $1.5 million for future capital needs.

## CONTACTING THE VILLAGE'S FINANCIAL MANAGEMENT

This financial report is designed to provide our citizens, taxpayers, customers, investors and creditors with a general overview of the Village's finances and to show the Village's accountability for the money it receives. If you have questions about this report or need additional information please contact:

**Village of Palm Springs**
**Finance Department**
**226 Cypress Lane**
**Palm Springs, FL 33461**
**561-965-4013**
**www.vpsfl.org**

# BASIC FINANCIAL STATEMENTS

## VILLAGE OF PALM SPRINGS, FLORIDA

*Statement of Net Position*
*September 30, 2020*

| | Governmental Activities | Business-type Activities | Total |
|---|---|---|---|
| **Assets** | | | |
| Cash and cash equivalents | $ 17,947,593 | $ 33,445,149 | $ 51,392,742 |
| Receivables: | | | |
| Accounts, net of allowance | 31,259 | 3,417,613 | 3,448,872 |
| Utility taxes | 230,005 | - | 230,005 |
| Franchise fees | 335,814 | - | 335,814 |
| Intergovernmental | 339,665 | - | 339,665 |
| Grants | 495,414 | - | 495,414 |
| Inventory | 70,539 | 525,129 | 595,668 |
| Net pension asset | 1,512,005 | 351,125 | 1,863,130 |
| Capital assets: | | | |
| Capital assets, not being depreciated | 7,341,620 | 1,878,250 | 9,219,870 |
| Capital assets being depreciated | 21,745,972 | 108,673,925 | 130,419,897 |
| Accumulated depreciation | (10,508,919) | (62,913,153) | (73,422,072) |
| **Total assets** | **$ 39,540,967** | **$ 85,378,038** | **$ 124,919,005** |
| **Deferred outflows of resources** | | | |
| Deferred amount related to pensions | $ 3,529,065 | $ 877,034 | $ 4,406,099 |
| Deferred amount related to OPEB | 58,455 | 24,589 | 83,044 |
| **Total deferred outflows of resources** | **$ 3,587,520** | **$ 901,623** | **$ 4,489,143** |
| **Liabilities** | | | |
| Accounts payable and accrued liabilities | $ 725,597 | $ 453,874 | $ 1,179,471 |
| Contract retainage payable | 16,416 | 3,227 | 19,643 |
| Accrued interest payable | 9,896 | 122,744 | 132,640 |
| Deposits | 72,786 | 1,596,137 | 1,668,923 |
| Unearned revenue | 310,259 | - | 310,259 |
| Noncurrent liabilities | | | |
| Due within one year | | | |
| Notes payable | 312,841 | 652,355 | 965,196 |
| Compensated absences | 95,990 | 24,548 | 120,538 |
| Due in more than one year | | | |
| Notes payable | 3,775,350 | 9,489,095 | 13,264,445 |
| Compensated absences | 805,988 | 235,802 | 1,041,790 |
| Other postemployment benefits payable | 398,452 | 180,007 | 578,459 |
| Net pension liability | 10,403,366 | 2,599,216 | 13,002,582 |
| **Total liabilities** | **$ 16,926,941** | **$ 15,357,005** | **$ 32,283,946** |
| **Deferred inflows of resources** | | | |
| Deferred amount related to debt refunding | $ - | $ 89,466 | $ 89,466 |
| Deferred amount related to pensions | 1,790,226 | 607,756 | 2,397,982 |
| Deferred amount related to OPEB | 2,066 | 869 | 2,935 |
| **Total deferred inflows of resources** | **$ 1,792,292** | **$ 698,091** | **$ 2,490,383** |
| **Net position** | | | |
| Net investment in capital assets | $ 14,490,482 | $ 37,408,106 | $ 51,898,588 |
| Restricted for law enforcement | 54,669 | - | 54,669 |
| Restricted for debt service | 249,462 | - | 249,462 |
| Restricted for sales tax capital projects | 4,172,367 | - | 4,172,367 |
| Unrestricted | 5,442,274 | 32,816,459 | 38,258,733 |
| **Total net position** | **$ 24,409,254** | **$ 70,224,565** | **$ 94,633,819** |

*See notes to financial statements.*

## VILLAGE OF PALM SPRINGS, FLORIDA

*Statement of Activities*
*Year Ended September 30, 2020*

| Functions/Programs | Expenses | Program Revenues: Charges For Services | Program Revenues: Operating Grants and Contributions | Program Revenues: Capital Grants and Contributions |
|---|---|---|---|---|
| Governmental activities: | | | | |
| General government | $ 2,879,926 | $ 938,452 | $ 69,606 | $ 16,578 |
| Public safety | 9,446,884 | 1,055,961 | 38,517 | 35,840 |
| Physical environment | 1,173,626 | 1,147,017 | 461 | - |
| Transportation | 2,201,178 | - | 114,504 | 84,103 |
| Culture/recreation | 1,644,442 | 102,789 | 17,166 | 882,802 |
| Interest on long-term debt | 124,680 | - | - | - |
| **Total governmental activities** | **17,470,736** | **3,244,219** | **240,254** | **1,019,323** |
| Business-type activities: | | | | |
| Water and sewer utility | 15,595,379 | 21,095,572 | - | 134,188 |
| Stormwater utility | 12,885 | 519,265 | 6,902 | - |
| **Total business-type activities** | **15,608,264** | **21,614,837** | **6,902** | **134,188** |
| **Total** | **$ 33,079,000** | **$ 24,859,056** | **$ 247,156** | **$ 1,153,511** |

| | |
|---|---|
| General revenues: | |
| Taxes: | |
| Property taxes | |
| Utility service taxes | |
| Franchise fees | |
| Sales and use taxes | |
| Business taxes | |
| Intergovernmental, unrestricted | |
| Investment income | |
| Miscellaneous | |
| Transfers | |
| Total general revenues and transfers | |
| Change in net position | |
| Net position, beginning of year | |
| **Net position, end of year** | |

| Governmental Activities | Business-Type Activities | Total |
|---|---|---|
| $ (1,855,290) | $ - | $ (1,855,290) |
| (8,316,566) | - | (8,316,566) |
| (26,148) | - | (26,148) |
| (2,002,571) | - | (2,002,571) |
| (641,685) | - | (641,685) |
| (124,680) | - | (124,680) |
| **(12,966,940)** | **-** | **(12,966,940)** |
| - | 5,634,381 | 5,634,381 |
| - | 513,282 | 513,282 |
| **-** | **6,147,663** | **6,147,663** |
| **(12,966,940)** | **6,147,663** | **(6,819,277)** |
| 4,905,214 | - | 4,905,214 |
| 2,790,188 | - | 2,790,188 |
| 1,505,749 | - | 1,505,749 |
| 3,792,719 | - | 3,792,719 |
| 394,669 | - | 394,669 |
| 851,029 | - | 851,029 |
| 110,534 | 186,550 | 297,084 |
| 144,641 | 52,003 | 196,644 |
| 2,490,099 | (2,490,099) | - |
| **16,984,842** | **(2,251,546)** | **14,733,296** |
| 4,017,902 | 3,896,117 | 7,914,019 |
| 20,391,352 | 66,328,448 | 86,719,800 |
| **$ 24,409,254** | **$ 70,224,565** | **$ 94,633,819** |

*See notes to financial statements.*

## VILLAGE OF PALM SPRINGS, FLORIDA

*Balance Sheet*
*Governmental Funds*
*September 30, 2020*

| | General Fund | Nonmajor Governmental Funds | Total Governmental Funds |
|---|---|---|---|
| **Assets** | | | |
| Cash and cash equivalents | $ 17,643,462 | $ 304,131 | $ 17,947,593 |
| Receivables: | | | |
| Accounts, net of allowance for uncollectibles | 31,259 | - | 31,259 |
| Utility taxes | 230,005 | - | 230,005 |
| Franchise fees | 335,814 | - | 335,814 |
| Intergovernmental | 339,665 | - | 339,665 |
| Grants | 495,414 | - | 495,414 |
| Inventory | 70,539 | - | 70,539 |
| **Total assets** | **$ 19,146,158** | **$ 304,131** | **$ 19,450,289** |
| **Liabilities** | | | |
| Accounts payable and accrued liabilities | $ 725,597 | $ - | $ 725,597 |
| Contract retainage payable | 16,416 | - | 16,416 |
| Deposits | 72,786 | - | 72,786 |
| **Total liabilities** | $ 814,799 | $ - | $ 814,799 |
| **Deferred inflows of resources** | | | |
| Unavailable revenues | $ 310,259 | $ - | $ 310,259 |
| **Fund balances** | | | |
| Nonspendable: | | | |
| Inventory | $ 70,539 | $ - | $ 70,539 |
| Restricted for: | | | |
| Law enforcement | - | 54,669 | 54,669 |
| Debt service | - | 249,462 | 249,462 |
| Sales tax capital projects | 4,172,367 | - | 4,172,367 |
| Assigned to: | | | |
| Disaster recovery | 3,000,000 | - | 3,000,000 |
| Capital projects | 1,500,000 | - | 1,500,000 |
| Subsequent year's budget | 1,183,000 | - | 1,183,000 |
| Unassigned: | | | |
| General fund | 8,095,194 | - | 8,095,194 |
| **Total fund balances** | $ 18,021,100 | $ 304,131 | $ 18,325,231 |
| **Total liabilities, deferred inflows of resources and fund balances** | **$ 19,146,158** | **$ 304,131** | **$ 19,450,289** |

*See notes to financial statements.*

**VILLAGE OF PALM SPRINGS, FLORIDA**
*Reconciliation of the Governmental Funds Balance Sheet*
*to the Statement of Net Position*
*September 30, 2020*

| | | |
|---|---|---|
| Total governmental fund balances (page 19) | | $ 18,325,231 |
| Amounts reported for governmental activities in the statement of net position are different because: | | |
| Net pension assets of defined benefit pension plans are not available, spendable resources and therefore are not reported in governmental funds. | | 1,512,005 |
| Capital assets used in governmental activities are not available, spendable resources and therefore are not reported in governmental funds: | | |
| Cost of assets | $ 29,087,592 | |
| Accumulated depreciation | (10,508,919) | |
| | | 18,578,673 |
| Deferred outflows/inflows of resources related to defined benefit pension and OPEB plans are reported in the statement of net position but are not reported in the governmental funds. | | |
| Deferred outflows of resources related to pensions | $ 3,529,065 | |
| Deferred inflows of resources related to pensions | (1,790,226) | |
| Deferred outflows of resources related to OPEB | 58,455 | |
| Deferred inflows of resources related to OPEB | (2,066) | |
| | | 1,795,228 |
| Long-term liabilities, including notes payable, are not due and payable in the current period and therefore are not reported in the governmental funds. Long-term liabilities at year-end consist of: | | |
| Note payable | $ (4,088,191) | |
| Accrued interest payable on long-term debt | (9,896) | |
| Compensated absences payable | (901,978) | |
| Other postemployment benefits payable | (398,452) | |
| Net pension liability | (10,403,366) | |
| | | (15,801,883) |
| **Total net position (page 16)** | | **$ 24,409,254** |

*See notes to financial statements.*

## VILLAGE OF PALM SPRINGS, FLORIDA

*Statement of Revenues, Expenditures and Changes in Fund Balances*
*Governmental Funds*
*Year Ended September 30, 2020*

| | General Fund | Nonmajor Governmental Funds | Total Governmental Funds |
|---|---|---|---|
| **Revenues** | | | |
| Taxes | $ 9,162,691 | $ 433,129 | $ 9,595,820 |
| Permits | 617,014 | - | 617,014 |
| Intergovernmental | 5,918,164 | - | 5,918,164 |
| Charges for services | 2,142,807 | - | 2,142,807 |
| Fines and forfeitures | 170,208 | - | 170,208 |
| Contributions and donations | 20,602 | - | 20,602 |
| Investment income | 110,534 | - | 110,534 |
| Facility rental | 260,495 | - | 260,495 |
| Miscellaneous | 105,112 | - | 105,112 |
| **Total revenues** | **18,507,627** | **433,129** | **18,940,756** |
| **Expenditures** | | | |
| Current: | | | |
| General government | 2,592,658 | - | 2,592,658 |
| Public safety | 8,992,315 | - | 8,992,315 |
| Physical environment | 1,173,626 | - | 1,173,626 |
| Transportation | 2,055,397 | - | 2,055,397 |
| Culture/recreation | 1,493,489 | - | 1,493,489 |
| Capital outlay | 3,484,721 | - | 3,484,721 |
| Debt service: | | | |
| Principal | - | 305,496 | 305,496 |
| Interest and other fiscal charges | - | 125,420 | 125,420 |
| **Total expenditures** | **19,792,206** | **430,916** | **20,223,122** |
| Excess of revenues over (under) expenditures | (1,284,579) | 2,213 | (1,282,366) |
| **Other financing sources** | | | |
| Proceeds from sale of capital assets | 58,947 | - | 58,947 |
| Transfers in | 2,490,099 | - | 2,490,099 |
| **Total other financing sources** | **2,549,046** | **-** | **2,549,046** |
| Change in fund balances | 1,264,467 | 2,213 | 1,266,680 |
| Fund balances, beginning of year | 16,756,633 | 301,918 | 17,058,551 |
| **Fund balances, end of year** | **$ 18,021,100** | **$ 304,131** | **$ 18,325,231** |

*See notes to financial statements.*

## VILLAGE OF PALM SPRINGS, FLORIDA

*Reconciliation of the Statement of Revenues, Expenditures and Changes in Fund Balances of Governmental Funds to the Statement of Activities*
*Year Ended September 30, 2020*

| | | |
|---|---|---|
| Net change in fund balances - total governmental funds (page 21) | | $ 1,266,680 |
| Amounts reported for governmental activities in the statement of activities are different because: | | |
| Governmental funds report capital outlays as expenditures, however, in the statement of activities the cost of those assets is depreciated over their estimated useful lives: | | |
| Expenditures for capital assets | $ 3,484,721 | |
| Less current year depreciation expense | (1,305,885) | |
| | | 2,178,836 |
| In the statement of activities, only the gain or loss on the sale of capital assets is reported, whereas in the governmental funds the proceeds from the sale increases financial resources. The change in net position differs from the change in fund balance by the net book value of the assets retired. | | (1,164) |
| Some expenses reported in the statement of activities are not reported in the governmental funds because they have no effect on current financial resources: | | |
| Compensated absences | $ (163,256) | |
| Other postemployment benefits | (18,048) | |
| Pension expense | 448,618 | |
| | | 267,314 |
| Net effect of accrued interest on long-term debt (difference between amount accrued in prior year and current year accrual) | | 740 |
| Repayment of long-term debt is reported as an expenditure in governmental funds, but the repayment reduces long-term liabilities in the statement of net position. In the current year, these amounts consist of: | | |
| Principal payments on long-term debt | | 305,496 |
| **Change in net position of governmental activities (pages 17-18)** | | **$ 4,017,902** |

*See notes to financial statements.*

## VILLAGE OF PALM SPRINGS, FLORIDA

*Statement of Net Position*
*Enterprise Funds*
*September 30, 2020*

| | Major Fund | Nonmajor Fund | Total |
|---|---|---|---|
| | Water and Sewer Utility | Stormwater Utility | Enterprise Funds |
| **Assets** | | | |
| Current assets: | | | |
| Cash and cash equivalents | $ 32,753,735 | $ 691,414 | $ 33,445,149 |
| Accounts receivable, net | 3,414,442 | 3,171 | 3,417,613 |
| Inventory | 525,129 | - | 525,129 |
| **Total current assets** | **36,693,306** | **694,585** | **37,387,891** |
| Noncurrent assets: | | | |
| Net pension asset | 351,125 | - | 351,125 |
| Capital assets: | | | |
| Capital assets not being depreciated | 1,252,740 | 625,510 | 1,878,250 |
| Capital assets being depreciated | 108,672,260 | 1,665 | 108,673,925 |
| Accumulated depreciation | (62,913,153) | - | (62,913,153) |
| **Total noncurrent assets** | **47,362,972** | **627,175** | **47,990,147** |
| **Total assets** | **$ 84,056,278** | **$ 1,321,760** | **$ 85,378,038** |
| **Deferred outflows of resources** | | | |
| Deferred amount related to pensions | $ 877,034 | $ - | $ 877,034 |
| Deferred amount related to OPEB | 24,589 | - | 24,589 |
| **Total deferred outflows of resources** | **$ 901,623** | **$ -** | **$ 901,623** |
| **Liabilities** | | | |
| Current liabilities: | | | |
| Accounts payable and accrued liabilities | $ 453,874 | $ - | $ 453,874 |
| Contract retainage payable | 3,227 | - | 3,227 |
| Accrued interest on note payable | 122,744 | - | 122,744 |
| Current portion of note payable | 652,355 | - | 652,355 |
| Current portion of compensated absences payable | 24,548 | - | 24,548 |
| **Total current liabilities** | **1,256,748** | **-** | **1,256,748** |
| Noncurrent liabilities: | | | |
| Customer deposits | 1,596,137 | - | 1,596,137 |
| Note payable | 9,489,095 | - | 9,489,095 |
| Compensated absences payable | 235,802 | - | 235,802 |
| Other postemployment benefits payable | 180,007 | - | 180,007 |
| Net pension liability | 2,599,216 | - | 2,599,216 |
| **Total noncurrent liabilities** | **14,100,257** | **-** | **14,100,257** |
| **Total liabilities** | **$ 15,357,005** | **$ -** | **$ 15,357,005** |
| **Deferred inflows of resources** | | | |
| Deferred amount on refunding | $ 89,466 | $ - | $ 89,466 |
| Deferred amount related to pensions | 607,756 | - | 607,756 |
| Deferred amount related to OPEB | 869 | - | 869 |
| **Total deferred inflows of resources** | **$ 698,091** | **$ -** | **$ 698,091** |
| **Net position** | | | |
| Net investment in capital assets | $ 36,780,931 | $ 627,175 | $ 37,408,106 |
| Unrestricted | 32,121,874 | 694,585 | 32,816,459 |
| **Total net position** | **$ 68,902,805** | **$ 1,321,760** | **$ 70,224,565** |

*See notes to financial statements.*

## VILLAGE OF PALM SPRINGS, FLORIDA

*Statement of Revenues, Expenses and Changes in Net Position*
*Enterprise Funds*
*Year Ended September 30, 2020*

| | Major Fund | Nonmajor Fund | Total |
|---|---|---|---|
| | Water and Sewer Utility | Stormwater Utility | Enterprise Funds |
| **Operating revenues** | | | |
| Water revenues | $ 8,815,458 | $ - | $ 8,815,458 |
| Wastewater revenues | 11,671,360 | - | 11,671,360 |
| Stormwater revenues | - | 519,265 | 519,265 |
| Other operating revenues | 608,754 | 6,902 | 615,656 |
| **Total operating revenues** | **21,095,572** | **526,167** | **21,621,739** |
| **Operating expenses** | | | |
| Personal services | 4,628,858 | - | 4,628,858 |
| Operating expenses | 7,666,623 | 12,885 | 7,679,508 |
| Depreciation | 3,006,253 | - | 3,006,253 |
| **Total operating expenses** | **15,301,734** | **12,885** | **15,314,619** |
| Operating income | 5,793,838 | 513,282 | 6,307,120 |
| **Nonoperating revenues (expenses)** | | | |
| Investment income | 186,550 | - | 186,550 |
| Miscellaneous revenues | 27,330 | 60 | 27,390 |
| Gain on disposal of capital assets | 24,613 | - | 24,613 |
| Interest expense and fiscal charges | (293,645) | - | (293,645) |
| **Total nonoperating revenues (expenses)** | **(55,152)** | **60** | **(55,092)** |
| **Income before contributions and transfers** | **5,738,686** | **513,342** | **6,252,028** |
| Capital contributions | 134,188 | - | 134,188 |
| Transfers out | (2,490,099) | - | (2,490,099) |
| Change in net position | 3,382,775 | 513,342 | 3,896,117 |
| Net position, beginning of year | 65,520,030 | 808,418 | 66,328,448 |
| **Net position, end of year** | **$ 68,902,805** | **$ 1,321,760** | **$ 70,224,565** |

*See notes to financial statements.*

## VILLAGE OF PALM SPRINGS, FLORIDA

*Statement of Cash Flows*
*Enterprise Funds*
*Year Ended September 30, 2020*

| | Major Fund | Nonmajor Fund | Total |
|---|---|---|---|
| | Water and Sewer Utility | Stormwater Utility | Enterprise Funds |
| **Cash flows from operating activities** | | | |
| Cash received from customers | $ 21,128,456 | $ 525,372 | $ 21,653,828 |
| Cash paid to suppliers for goods and services | (7,401,362) | (45,496) | (7,446,858) |
| Cash paid to employees for services | (4,845,550) | - | (4,845,550) |
| Other receipts | 27,330 | 60 | 27,390 |
| **Net cash provided by operating activities** | **8,908,874** | **479,936** | **9,388,810** |
| **Cash flows from noncapital financing activity** | | | |
| Transfers out | (2,490,099) | - | (2,490,099) |
| **Net cash used in noncapital financing activity** | **(2,490,099)** | **-** | **(2,490,099)** |
| **Cash flows from capital and related financing activities** | | | |
| Principal paid on loan | (633,811) | - | (633,811) |
| Interest paid on long-term debt | (308,426) | - | (308,426) |
| Acquisition and construction of capital assets | (2,635,529) | (241,755) | (2,877,284) |
| Proceeds from sale of capital assets | 29,449 | - | 29,449 |
| Capital contributions from customers | 134,188 | - | 134,188 |
| **Net cash used in capital and related financing activities** | **(3,414,129)** | **(241,755)** | **(3,655,884)** |
| **Cash flows from investing activity** | | | |
| Investment income | 186,550 | - | 186,550 |
| **Net cash provided by investing activity** | **186,550** | **-** | **186,550** |
| Net increase in cash and cash equivalents | 3,191,196 | 238,181 | 3,429,377 |
| Cash and cash equivalents, beginning of year | 29,562,539 | 453,233 | 30,015,772 |
| **Cash and cash equivalents, end of year** | **$ 32,753,735** | **$ 691,414** | **$ 33,445,149** |

*Continued*

## VILLAGE OF PALM SPRINGS, FLORIDA

*Statement of Cash Flows (Continued)*
*Enterprise Funds*
*Year Ended September 30, 2020*

| | Major Fund | Nonmajor Fund | Total |
|---|---|---|---|
| | Water and Sewer Utility | Stormwater Utility | Enterprise Funds |
| **Cash flows from operating activities** | | | |
| Operating income | $ 5,793,838 | $ 513,282 | $ 6,307,120 |
| Adjustments to reconcile operating income to net cash provided by operating activities: | | | |
| Depreciation | 3,006,253 | - | 3,006,253 |
| Provision for uncollectible accounts | 8,242 | - | 8,242 |
| Miscellaneous revenues | 27,330 | 60 | 27,390 |
| Change in operating assets and liabilities: | | | |
| Accounts receivable | (11,106) | (795) | (11,901) |
| Inventory | 370,871 | - | 370,871 |
| Net pension asset | (351,125) | - | (351,125) |
| Deferred outflows related to pensions | 583,916 | - | 583,916 |
| Deferred outflows related to OPEB | (24,020) | - | (24,020) |
| Accounts payable and accrued liabilities | (105,610) | (32,611) | (138,221) |
| Compensated absences payable | 50,278 | - | 50,278 |
| Customer deposits | 35,748 | - | 35,748 |
| Other postemployment benefits payable | 30,742 | - | 30,742 |
| Net pension liability | (384,449) | - | (384,449) |
| Deferred inflows related to OPEB | 869 | - | 869 |
| Deferred inflows related to pensions | (122,903) | - | (122,903) |
| Total adjustments | 3,115,036 | (33,346) | 3,081,690 |
| **Net cash provided by operating activities** | **$ 8,908,874** | **$ 479,936** | **$ 9,388,810** |
| **Supplemental disclosure of noncash capital and related financing activities** | | | |
| Amortization of deferred amount on refunding | $ 7,110 | $ - | $ 7,110 |

*See notes to financial statements.*

## VILLAGE OF PALM SPRINGS, FLORIDA

*Statement of Fiduciary Net Position*
*Fiduciary Funds*
*September 30, 2020*

| | | Employee Pension Funds |
|---|---|---|
| **Assets** | | |
| Cash and cash equivalents | $ | 1,830,229 |
| Receivables: | | |
| Interest and dividends | | 59,205 |
| Investments: | | |
| U.S. Treasury securities | | 1,105,153 |
| U.S. Government agencies | | 5,964,839 |
| Mortgage and asset-backed securities | | 532,121 |
| Domestic corporate bonds | | 5,696,905 |
| International fixed income mutual fund | | 2,302,727 |
| Domestic equity securities and mutual fund | | 34,661,163 |
| Foreign equity securities and mutual fund | | 6,643,750 |
| Real estate investment account | | 5,549,961 |
| Total investments | | 62,456,619 |
| **Total assets** | **$** | **64,346,053** |
| **Liabilities** | | |
| Accounts payable | $ | 46,732 |
| **Total liabilities** | **$** | **46,732** |
| **Net position** | | |
| Net position restricted for pension benefits | $ | 64,299,321 |
| **Total net position** | **$** | **64,299,321** |

*See notes to financial statements.*

## VILLAGE OF PALM SPRINGS, FLORIDA

*Statement of Changes in Fiduciary Net Position*
*Fiduciary Funds*
*Year Ended September 30, 2020*

| | | Employee Pension Funds |
|---|---|---|
| **Additions** | | |
| Contributions: | | |
| Employer | $ | 1,725,516 |
| Plan members | | 164,532 |
| State of Florida | | 153,120 |
| Total contributions | | 2,043,168 |
| Investment income: | | |
| Interest | | 298,243 |
| Dividends | | 1,702,809 |
| Net increase in fair value of investments | | 3,535,057 |
| Investment expenses | | (77,003) |
| Net investment income | | 5,459,106 |
| **Total additions** | | **7,502,274** |
| **Deductions** | | |
| Administration | | 150,687 |
| Benefits | | 2,106,903 |
| **Total deductions** | | **2,257,590** |
| Change in plan net position | | 5,244,684 |
| Net position restricted for pension benefits, beginning of year | | 59,054,637 |
| **Net position restricted for pension benefits, end of year** | **$** | **64,299,321** |

*See notes to financial statements.*

## NOTE 1. SUMMARY OF SIGNIFICANT ACCOUNTING POLICIES

The Village of Palm Springs, Florida (the "Village"), was incorporated in 1957 pursuant to Chapter 57-1698, Laws of Florida and is located in central Palm Beach County, Florida. The Village operates under the Council-Manager form of government and provides a wide range of community services including public safety, planning and zoning, water, wastewater and stormwater systems, sanitation, streets and roads, parks, recreation, and library. The Village Council ("The Council") is responsible for legislative and fiscal control of the Village.

The basic financial statements of the Village have been prepared in conformity with U.S. generally accepted accounting principles ("GAAP") as applied to governmental units. The Governmental Accounting Standards Board (GASB) is the accepted standard setting body for establishing governmental accounting and financial reporting principles.

The significant Village accounting policies are described below.

### Financial Reporting Entity

As required by U.S. generally accepted accounting principles, the basic financial statements present the primary government and its component units. Component units are legally separate entities for which the primary government is considered to be financially accountable and for which the nature and significance of their relationship with the primary government are such that exclusion would cause the Village's financial statements to be misleading or incomplete. The primary government is considered financially accountable if it appoints a voting majority of an organization's governing body and imposes its will on that organization. The primary government may also be financially accountable if an organization is fiscally dependent on the primary government, regardless of the authority of the organization's governing board.

The Village has one dependent special district, created pursuant to Florida Statutes, that is considered a component unit.

The *Palm Springs Community Redevelopment Agency* (the "CRA") is a dependent special district established by the Village under authority granted by Florida Statutes Chapter 163, Section III. The CRA is a legally separate entity established by Ordinance No. 2019-19 of the Palm Springs Village Council on November 14, 2019. The purpose of the CRA is to promote and guide the physical and economic redevelopment of approximately 512 acres in two districts within the Village. The CRA is governed by a seven member Governing Board that includes the five members of the Village Council and two additional members appointed by the Village Council representing the two CRA districts. The Mayor of the Village serves as the Chair of the CRA Governing Board. The Village Council approves the CRA's annual budget and all debt obligations of the CRA. Accordingly, the CRA is considered a blended component unit of the Village. The CRA's first year of operations will be for the year ending September 30, 2021.

### Government-Wide and Fund Financial Statements

The government-wide financial statements (i.e., the statement of net position and the statement of activities) report information on all of the non-fiduciary activities of the Village. *Governmental activities*, which are normally supported by taxes and intergovernmental revenues, are reported separately from *Business-type activities*, which rely to a significant extent on user fees and charges for support.

## NOTE 1. SUMMARY OF SIGNIFICANT ACCOUNTING POLICIES (Continued)

### Government-Wide and Fund Financial Statements (Continued)

The statement of activities demonstrates the degree to which the direct expenses of a given function or segment are offset by program revenues. *Direct expenses* are those that are clearly identifiable with a specific function or segment. *Program revenues* include 1) charges to customers who purchase, use, or directly benefit from goods, services, or privileges provided by a given function or segment, and 2) grants and contributions that are restricted to meeting the operational or capital requirements of a particular function or segment. Taxes and other items not properly included among program revenues are reported instead as general revenues.

Separate financial statements are provided for governmental funds, enterprise funds, and fiduciary funds, even though the latter are excluded from the government-wide financial statements. The major governmental fund and the major enterprise fund are reported as separate columns in the fund financial statements.

### Measurement Focus, Basis of Accounting and Financial Statement Presentation

The government-wide financial statements are reported using the economic resources measurement focus and the accrual basis of accounting, as are the enterprise fund and fiduciary fund financial statements. Revenues are recorded when earned and expenses are recorded when a liability is incurred, regardless of the timing of related cash flows. Property taxes are recognized as revenues in the year for which they are levied. Grants and similar items are recognized as revenue as soon as all eligibility requirements imposed by the grantor are met.

Governmental fund financial statements are reported using the current financial resources measurement focus and the modified accrual basis of accounting. Revenues are recognized as soon as they are both measurable and available. Revenues are considered to be available when they are collectible within the current period or soon enough thereafter to pay liabilities of the current period. For this purpose, the Village considers revenues to be available if they are collected within 60 days of the end of the current fiscal year. Franchise taxes, utility service taxes, business taxes, and interest revenues associated with the current fiscal year are all considered to be susceptible to accrual and so have been recognized as revenues of the current fiscal year. All other revenue items are considered to be measurable and available only when cash is received by the Village, except for grant revenue, which is recorded when the related expenditures/ expenses are incurred and the time and purpose restrictions have been met.

Expenditures generally are recorded when a liability is incurred, as under accrual accounting. However, debt service expenditures, as well as expenditures related to compensated absences, are recorded only when payment is due.

For purposes of measuring the net pension liability, deferred inflows/outflows of resources related to pensions, and pension expense, information about the fiduciary net position of the Village's defined benefit pension plans and Florida Retirement System (FRS) and the additions to/deductions from the fiduciary net position, have been determined on the same basis as they are reported by the Village's defined benefit pension plans and FRS. For purposes of measuring the total OPEB liability, deferred inflows/outflows of resources related to OPEB, and OPEB expense, have been determined on the same basis as reported by the Village. For this purpose, pension and OPEB benefit payments (including refunds of employee contributions) are recognized when due and payable in accordance with the benefit terms.

## NOTE 1. SUMMARY OF SIGNIFICANT ACCOUNTING POLICIES (Continued)

### Measurement Focus, Basis of Accounting and Financial Statement Presentation (Continued)

The Village reports one major governmental fund as follows:

General Fund

The General Fund is the primary operating fund of the Village. All general revenues and other receipts that are not allocated by law or contractual agreement to another fund are accounted for in this fund. The general operating expenditures and capital improvement costs that are not paid through other funds are paid from the General Fund.

The Village reports one major enterprise fund as follows:

Water and Sewer Utility Fund

This fund is used to account for operations that provide a service to citizens, financed primarily by a user charge, and where the periodic measurement of net income is deemed appropriate for capital maintenance, public policy, management control, accountability or other purposes. The Water and Sewer Utility Fund is used to account for water and sewer services provided by the Village to residents and other users.

Additionally, the Village reports the following fund types:

**Nonmajor Governmental Funds**

Special Revenue Fund

Special revenue funds are used to account for the proceeds of specific revenue sources (other than major capital projects) requiring separate accounting because of legal or regulatory provisions or administrative action. The special revenue fund used by the Village is the *Law Enforcement Fund* which accounts for proceeds from law enforcement forfeitures. Expenditures from this fund are legally restricted for law enforcement.

Debt Service Fund

The Village has one debt service fund used to account for assets held for the repayment of principal and interest on general obligation debt.

**Nonmajor Enterprise Fund**

The Village has one nonmajor enterprise fund, the *Stormwater Fund*, that is used to account for stormwater fees and related expenses for stormwater management.

**Fiduciary Funds**

Pension trust funds are used to account for assets held in a trustee capacity for retirement pensions. Pension trust funds are fiduciary funds. The Village has two defined benefit pension funds; one for General Employees and one for Police Officers.

As a general rule, the effect of interfund activity has been eliminated from the government-wide financial statements. Exceptions to this general rule are charges between the Village's utility functions and various other functions of the Village. Elimination of these charges would distort the direct costs and program revenues reported for the various functions concerned.

## NOTE 1. SUMMARY OF SIGNIFICANT ACCOUNTING POLICIES (Continued)

### Measurement Focus, Basis of Accounting and Financial Statement Presentation (Continued)

Enterprise funds distinguish operating revenues and expenses from nonoperating items. Operating revenues and expenses generally result from providing services and producing and delivering goods in connection with the enterprise funds' principal ongoing operations. The principal operating revenues of the Village's Water and Sewer and Stormwater Utility Funds are charges to customers for services. Operating expenses for enterprise funds include the cost of services, administrative expenses, and depreciation on capital assets. All revenues and expenses not meeting this definition are reported as nonoperating revenues and expenses.

### Assets, Liabilities, Deferred Outflows / Inflows of Resources, and Net Position / Fund Balances

#### a. Pooled Cash, Cash Equivalents and Investments

Pooled cash, cash equivalents and investments consist of cash on hand, interest-bearing cash accounts and investments with Florida Prime, a local government investment pool administered by the Florida State Board of Administration ("SBA"). Cash balances and the requirements of all funds are considered in determining the amount to be invested.

Investments are reported at fair value, which is determined by using various third party pricing sources. The Florida Prime investment pool is operated as a "2a-7 like" pool and the fair value of this investment is considered to be the same as the Village's account balance (amortized cost) in the pool. The SBA administers the Florida Prime investments pursuant to Chapter 19-7 of the Florida Administrative Code which provides guidance and establishes the general operating procedures for the administration of Florida Prime.

Cash and cash equivalents, for purposes of the statement of cash flows, include pooled cash and investments which are defined as short-term, highly liquid investments with original maturities of three months or less.

#### b. Inventory

Inventory consists of materials and supplies which are carried at cost in the governmental funds and at the lower of cost (first-in, first-out) or market in the enterprise fund. The Village uses the consumption method, wherein all inventories are maintained by perpetual records, expensed when used, and adjusted by an annual physical count.

#### c. Unbilled Service Receivables

The Water and Sewer Utility Fund recognizes revenue on the basis of monthly cycle billings to customers for services provided. As a result of this cycle billing method, there are unbilled receivables at the end of each fiscal year with respect to services provided but not billed at such date. It is the policy of the Village to accrue these amounts at year end.

## NOTE 1. SUMMARY OF SIGNIFICANT ACCOUNTING POLICIES (Continued)

### Assets, Liabilities, Deferred Outflows / Inflows of Resources, and Net Position / Fund Balances (Continued)

#### d. Concentration of Credit Risk

The Village requires customer deposits for water and sewer service and maintains an allowance for doubtful accounts at a level which management believes is sufficient to cover potential credit losses.

#### e. Capital Assets

Capital assets, which include property, plant, and equipment, intangible assets and infrastructure assets (e.g., roads, bridges, sidewalks, drainage, and similar items) are reported in the applicable governmental or business-type activities columns in the government-wide financial statements. Capital assets are defined by the Village as assets with an initial individual cost of $1,000 or more and an estimated life in excess of one year.

Purchased or constructed assets are recorded at actual cost or estimated historical cost if actual cost is unavailable. Donated capital assets are recorded at acquisition value, which is the price that would be paid to acquire an asset with equivalent service potential in an orderly market transaction at the date of acquisition. General governmental infrastructure assets acquired or constructed since incorporation in 1957 have been capitalized.

The accounting and reporting treatment applied to the capital assets associated with a fund are determined by its measurement focus. General capital assets are the assets of the Village as a whole. When purchased, such assets are recorded as expenditures in the governmental funds and capitalized as assets in the government-wide statement of net position. General capital assets are carried at historical cost. Where cost cannot be determined from the available records, estimated historical cost has been used to record the estimated value of the assets. The street network was valued based on current construction costs discounted by consumer price indices for highway construction.

Capital assets of the enterprise fund are capitalized in the fund and in the government-wide statement of net position. The valuation basis for enterprise fund capital assets is the same as that used for general capital assets. Interest cost was capitalized on enterprise fund capital assets during the construction period prior to adoption of GASB Statement No. 89 in 2018. Additions, improvements, and other capital outlay that significantly extend the useful life of an asset are capitalized. The costs of normal maintenance and repairs that do not add to the value of the asset or materially extend asset lives are not capitalized.

In the government-wide financial statements and in the enterprise fund financial statements, the cost of property sold or retired, together with the related accumulated depreciation, is removed from the appropriate accounts and any resulting gain or loss is included in the change in net position.

## NOTE 1. SUMMARY OF SIGNIFICANT ACCOUNTING POLICIES (Continued)

### Assets, Liabilities, Deferred Outflows / Inflows of Resources, and Net Position / Fund Balances (Continued)

#### e. Capital Assets (Continued)

Capital assets of the Village are depreciated using the straight-line method over the following estimated useful lives:

| | |
|---|---|
| Buildings | 30-50 years |
| Improvements | 10-50 years |
| Intangible assets | 22-40 years |
| Software / library materials | 3-5 years |
| Equipment and vehicles | 3-20 years |

The street network (pavement, drainage, sidewalks, and curbs) is not depreciated. The Village has elected to use the modified approach in accounting for its streets. The modified approach allows governments to report as expenses in lieu of depreciation, infrastructure expenditures which maintain the asset but do not add to or improve the asset. Additions and improvements to the street network are capitalized. The Village uses a pavement rating system to rate street condition and quantify the results of maintenance efforts. The condition rating of the Village's street system may be found on page 77.

#### f. Unearned / Unavailable Revenue

Unearned revenue in the Governmental Activities and unavailable revenue in the Governmental Funds includes amounts received in advance by the Village for business taxes applicable to the following fiscal year. Unavailable revenue in the Governmental Funds also includes amounts due in future years that were not available to pay current period expenditures under the modified accrual basis of accounting.

#### g. Compensated Absences

The Village's employees earn personal leave time based on their years of continuous service as follows: 160 hours after 1 year; 200 hours after 6 years; 240 hours after 11 years; and 280 hours after 21 years. Personal leave may be used for vacation, illness and other time off as approved by the employee's supervisor. Employees may accumulate personal leave time up to a maximum number of hours based on years of service, but never more than 600 hours. Employees are also required to use a minimum number of hours of personal leave time annually based upon years of service, or forfeit the unused hours up to the minimum required to be used, however, employees may be compensated for unused personal leave, up to a maximum of 80 hours annually, if their unscheduled leave does not exceed certain limits each year. Upon termination, employees are compensated for accumulated personal leave at their rate of pay at termination, up to the maximum of 600 hours. A liability for compensated absences is accrued when incurred in the government-wide and enterprise fund financial statements. In the governmental funds, a liability is recorded for compensated absences only if they have matured, for example, as a result of employee resignations and retirements, and the amount, if any, is reported with accounts payable and accrued liabilities in the governmental funds' balance sheet.

## NOTE 1. SUMMARY OF SIGNIFICANT ACCOUNTING POLICIES (Continued)

### Assets, Liabilities, Deferred Outflows / Inflows of Resources, and Net Position / Fund Balances (Continued)

#### h. Noncurrent Obligations

In the government-wide financial statements and enterprise fund financial statements, long-term debt and other noncurrent obligations are reported as liabilities in the applicable governmental activities, business-type activities, or enterprise fund statement of net position. Long-term debt is reported net of applicable premium or discount. Debt discount, premium and deferred amount on debt refunding in the government-wide financial statements and enterprise fund are amortized using the straight-line method, which approximates the interest method, and are charged against operations over the term of the related debt issues.

In the fund financial statements, governmental fund types recognize debt premiums and discounts during the current period. The face amount of debt issued is reported as other financing sources. Premiums received on debt issuances are reported as other financing sources while discounts on debt issuances are reported as other financing uses. Issuance costs are reported as debt service expenditures.

#### i. Deferred Outflows / Inflows of Resources

In addition to assets and liabilities, the government-wide and Enterprise Fund Statements of Net Position and the governmental funds Balance Sheet report a separate section for deferred outflows or deferred inflows of resources. The separate financial statement element, *deferred outflows of resources*, represents a consumption of net position that applies to a future period(s) and so will not be recognized as an outflow of resources (expense/expenditure) until that time. The Village's deferred outflows of resources are related to its pension and other postemployment benefits (OPEB) liabilities.

The separate financial statement element, *deferred inflows of resources*, represents an acquisition of net position that applies to a future period(s) and so will not be recognized as an inflow of resources (revenues) until that time. The Village's deferred inflows are related to its pension obligations, OPEB liabilities and a deferred amount on debt refunding, which are reported as deferred inflows of resources on the government-wide Statement of Net Position. The deferred amount on debt refunding was a gain resulting from the difference in the carrying value of refunded debt and its reacquisition price. This amount is deferred and amortized over the shorter of the life of the refunded or refunding debt. In addition, the Village has another item, unavailable revenues, which arises only under the modified accrual basis of accounting and is reported as a deferred inflow of resources on the governmental funds Balance Sheet. The unavailable revenues result from business taxes received by the Village in advance of the year for which they were levied. These amounts are deferred and recognized as an inflow of resources in the year that the amounts become available.

## NOTE 1. SUMMARY OF SIGNIFICANT ACCOUNTING POLICIES (Continued)

### Assets, Liabilities, Deferred Outflows / Inflows of Resources, and Net Position / Fund Balances (Continued)

#### j. Fund Balances

Nature and Purpose of Fund Equity Classifications: In the fund financial statements, governmental funds report fund equity classifications that comprise a hierarchy based primarily on the extent to which the Village is legally bound to honor the specific purposes for which amounts in fund balance may be spent. The fund balance classifications are summarized as follows:

- Nonspendable - Nonspendable fund balances include amounts that cannot be spent because they are either 1) not in spendable form; or, 2) legally or contractually required to be maintained intact.
- Restricted - Restricted fund balances include amounts that are restricted to specific purposes either by 1) constraints placed on the use of resources by creditors, grantors, contributors, or laws or regulations of other governments; or, 2) imposed by law through constitutional provisions or enabling legislation.
- Committed - Committed fund balances include amounts that can only be used for specific purposes pursuant to constraints imposed by the Village Council through an Ordinance. The Village had no committed fund balances.
- Assigned - Assigned fund balances include amounts that are constrained by the Village's intent to be used for specific purposes but are neither restricted nor committed. Assignments of fund balance are made by Village management based upon a Resolution adopted by the Village Council or in the Village's annual budget.
- Unassigned - Unassigned fund balance includes the General Fund amount that is spendable and has not been restricted, committed, or assigned to specific purposes.

The Village considers restricted fund balances to be spent when an expenditure is incurred for the restricted purpose. The Village considers committed, assigned or unassigned fund balances to be spent when an expenditure is incurred for purposes for which amounts in any of those fund balance classifications could be used.

Minimum Fund Balance Policy: The Village Council has not adopted a formal minimum fund balance policy. Generally, the Village strives to maintain sufficient General Fund fund balance to provide liquidity in the event of a budget shortfall or natural disaster.

#### k. Interfund Transactions

During the course of normal operations, it is necessary for the Village to enter into transactions among its various funds. These transactions consist of one or more of the following types:

- Reimbursements to a fund, which are generally reflected through the allocation of pooled cash accounts, for expenditures or expenses initially made from it that are properly applicable to another fund.

## NOTE 1. SUMMARY OF SIGNIFICANT ACCOUNTING POLICIES (Continued)

### Assets, Liabilities, Deferred Outflows / Inflows of Resources, and Net Position / Fund Balances (Continued)

#### k. Interfund Transactions (Continued)

- Transfers in and out, as appropriate, for all other interfund transactions, which are shown as other financing sources or uses.
- Outstanding balances between funds, including noncurrent advances, are reported as "due to/from other funds". Any such balances outstanding between governmental activities and business-type activities in the government-wide financial statements are classified as "internal balances" and are subject to elimination in the government-wide financial statements.

#### l. Property Taxes

Under Florida law, the assessment of all properties and the collection of all county, municipal and school board property taxes are consolidated in the offices of the County Property Appraiser and County Tax Collector, respectively. All property is reassessed according to its fair market value on January 1 of each year and each assessment roll is submitted to the State Department of Revenue for review to determine if the assessment roll meets the appropriate requirements of State law. The assessed value of property within the corporate limits of the Village at January 1, 2019, upon which the 2019/2020 levy was based, was approximately $1.325 billion. State Statutes permit municipalities to levy property taxes at a rate of up to 10 mills (1 mill equals $1.00 for each $1,000 of assessed value). Effective October 1, 2009 (fiscal year 2010), the Village transferred fire rescue services to Palm Beach County and the Palm Beach County Fire Rescue MSTU (municipal services taxing unit) taxes Village property owners 3.4581 mills. This millage rate is deducted from the Village's legal millage rate limit of 10 mills, thereby limiting the 2019/2020 Village millage rate to 6.5419.

The tax levy of the Village is established by the Village Council prior to October 1 of each year during the budget process. The Palm Beach County Property Appraiser incorporates the Village's millage into the total tax levy, which includes the County, County School Board, and Special District tax requirements. The operating millage rate assessed by the Village for the year ended September 30, 2020, was 3.5000 and the debt service millage was 0.3381, for a total millage of 3.8381. Taxes may be paid less a 4% discount in November or at a discount declining 1% each month through February. All unpaid taxes become delinquent on April 1 following the year in which they are assessed. Delinquent taxes on real property bear interest at 18% per year. On or prior to June 1 following the tax year, certificates are offered for sale for all delinquent taxes on real property. After sale, tax certificates bear interest at 18% per year or at any lower rate bid by the buyer. Application for a tax deed on any unredeemed tax certificates may be made by the certificate holder after a period of two years. Unsold certificates are held by the County. Delinquent taxes on personal property bear interest at 18% per year until the tax is satisfied either by seizure and sale of the property or by the five-year statute of limitations. All property taxes are collected by Palm Beach County and remitted to the Village. Property tax revenue is recognized at the time monies are received from Palm Beach County.

## NOTE 1. SUMMARY OF SIGNIFICANT ACCOUNTING POLICIES (Continued)

### Assets, Liabilities, Deferred Outflows / Inflows of Resources, and Net Position / Fund Balances (Continued)

#### l. Property Taxes (Continued)

During 2007 the Florida Legislature passed property tax reform legislation limiting the property tax levies of local governments in the State of Florida. Local governments that adopt a property tax levy in excess of the limit under State law will lose their Half-Cent Sales Tax distribution from the State for the succeeding twelve months. For the fiscal year ending September 30, 2020, the maximum tax levy allowed by a majority vote of the governing body is generally based on a percentage change applied to the prior year (2018/2019) property tax revenue. The percentage change is calculated based on the compound annual growth rate in the per capita property taxes levied for five preceding fiscal years. The State law allows local governments to adopt a higher millage rate based on the following approval of the governing body: 1) a majority vote to adopt a rate equal to the adjusted current year rolled-back millage rate plus an adjustment for growth in per capita Florida personal income; 2) a two-thirds vote to adopt a rate equal to the adjusted current year roll back millage rate plus 10%; or, 3) any millage rate approved by unanimous vote or referendum. For the fiscal year ending September 30, 2020, the Village adopted an operating millage rate of 3.5000, resulting in a total operating tax levy of $5,085,728 for 2020, an increase of approximately 7.4% from the operating property tax levy for 2019.

Future legislation could have a significant impact on the future tax revenues of the Village and the current services provided to Village residents.

#### m. On-behalf Payments

The Village received on-behalf payments of $153,120 from the State of Florida for the Police Officers Pension Plan for the year ended September 30, 2020. The on-behalf payments are recorded as intergovernmental revenue and public safety expenses/ expenditures in the government-wide and General Fund financial statements.

#### n. Use of Estimates

The financial statements and related disclosures are prepared in conformity with GAAP. Management is required to make estimates and assumptions that affect the reported amounts of assets and liabilities, deferred inflows/outflows of resources, the disclosure of contingent assets and liabilities at the date of the financial statements, and revenue and expenses/expenditures during the period reported. These estimates include assessing the collectability of receivables, the fair value of investments, and useful lives and possible impairment of tangible and intangible assets, among others. Estimates and assumptions are reviewed periodically and the revisions are reflected in the financial statements in the period they are determined to be necessary. Actual results could differ from the estimates.

#### o. Implementation of GASB Statements

There were no new GASB Statements effective for the Village for the fiscal year ended September 30, 2020.

## NOTE 1. SUMMARY OF SIGNIFICANT ACCOUNTING POLICIES (Continued)

### Assets, Liabilities, Deferred Outflows / Inflows of Resources, and Net Position / Fund Balances (Continued)

#### o. Implementation of GASB Statements (Continued)

The Governmental Accounting Standards Board has issued new Statements effective in future years that may apply to the Village. Management has not completed its analysis of the effects, if any, of these GASB statements on the financial statements of the Village:

- GASB Statement No. 84, *Fiduciary Activities*, establishes guidance regarding what constitutes fiduciary activities for accounting and financial reporting purposes, the recognition of liabilities to beneficiaries, and how fiduciary activities should be reported. The requirements of this Statement will be effective for the Village for the fiscal year ending September 30, 2021.
- GASB Statement No. 87, *Leases*, addresses accounting and financial reporting for leases by governments. The statement requires recognition of certain lease assets and liabilities for leases that previously were classified as operating leases and recognized as inflows of resources or outflows of resources based on the payment provisions of the contract. The requirements of this Statement will be effective for the Village for the fiscal year ending September 30, 2022.
- GASB Statement No. 90, *Majority Equity Interests, an amendment of GASB Statement No. 14 and No. 61,* establishes guidance regarding the reporting of a government's majority equity interest in a legally separate organization and the disclosure of financial statement information for certain component units. This Statement will be effective for the Village for the fiscal year ending September 30, 2021.
- GASB Statement No. 91, *Conduit Debt Obligations*, provides a single method of reporting conduit debt obligations by issuers and eliminates diversity in practice associated with (1) commitments extended by issuers, (2) arrangements associated with conduit debt obligations, and (3) related note disclosures. This Statement will be effective for the Village for the fiscal year ending September 30, 2023.
- GASB Statement No. 92, *Omnibus 2020*, addresses certain practice issues identified during implementation and application of certain GASB Statements, including 1) the effective date of GASB Statement No. 87 and Implementation Guide 2019-3 related to *Leases* for interim reports; 2) reporting of intra-entity transfers between a primary government employer and component unit defined benefit pension plan; 3) the applicability of GASB Statement No. 73 to reporting assets accumulated for OPEB; 4) applicability of GASB Statement No. 84 to postemployment benefit arrangements; 5) measurement of assets and liabilities related to asset retirement obligations; 6) reporting for amounts recoverable by public entity risk pools from reinsurers or excess insurers; and 7) certain terminology references. The requirements of this Statement related to items 1) and 7) are effective for the fiscal year ending September 30, 2021 and the remaining requirements will be effective for the Village for the fiscal year ending September 30, 2022.

## NOTE 1. SUMMARY OF SIGNIFICANT ACCOUNTING POLICIES (Continued)

### Assets, Liabilities, Deferred Outflows / Inflows of Resources, and Net Position / Fund Balances (Continued)

#### o. Implementation of GASB Statements (Continued)

- GASB Statement No. 93, *Replacement of Interbank Offered Rates,* addresses the replacement of an Interbank Offered Rate (IBOR) with other reference interest rates and modifies the existing provisions for hedge accounting termination and lease modifications. This Statement will be effective for the Village for the fiscal year ending September 30, 2022.
- GASB Statement No. 94, *Public-Private and Public-Public Partnerships and Availability Payment Arrangements,* addresses issues related to public-private and public-public partnerships (PPP) and provides guidance for accounting and financial reporting for availability payment arrangements (APA). The Statement provides specific guidance on the accounting and financial reporting for PPP and APA transactions. This Statement will be effective for the Village for the fiscal year ending September 30, 2023.
- GASB Statement No. 96, *Subscription-Based Information Technology Arrangements* provides guidance on the accounting and financial reporting for subscription-based information technology arrangements. This Statement will be effective for the Village for the fiscal year ending September 30, 2023.
- GASB Statement No. 97, *Certain Component Unit Criteria, and Accounting and Financial Reporting for Internal Revenue Code Section 457 Deferred Compensation Plans,* addresses the reporting of fiduciary component units without a governing board, requires that the financial burden criteria of Statement No. 84 apply only to defined benefit plans and requires Statement No. 84 to be applied to all Section 457 plans to determine whether those plans should be reported as fiduciary activities. The requirements of this Statement will be effective for the Village for the fiscal year ending September 30, 2022.

## NOTE 2. DEPOSITS AND INVESTMENTS

A summary of deposits and investments as shown on the statement of net position and statement of fiduciary net position for the Village is as follows:

| | Cash and Cash Equivalents | Investments | Total |
|---|---|---|---|
| Governmental activities | $ 17,947,593 | $ - | $ 17,947,593 |
| Business-type activities | 33,445,149 | - | 33,445,149 |
| **Total statement of net position** | **51,392,742** | **-** | **51,392,742** |
| Fiduciary Funds | 1,830,229 | 62,456,619 | 64,286,848 |
| **Total deposits and investments** | **$ 53,222,971** | **$ 62,456,619** | **$ 115,679,590** |

## NOTE 2. DEPOSITS AND INVESTMENTS (Continued)

### Deposits

In addition to insurance provided by the Federal Depository Insurance Corporation, deposits are held in banking institutions approved by the State Treasurer of the State of Florida to hold public funds as qualified public depositories. Under Florida Statutes Chapter 280, Florida Security for Public Deposits Act, the State Treasurer requires all Florida qualified public depositories to deposit eligible collateral with the State Treasurer or another banking institution. In the event of failure of a qualified public depository, all claims for government deposits would be satisfied by the State Treasurer from the proceeds of federal deposit insurance, pledged collateral of the public depository in default and, if necessary, a pro rata assessment to the other qualified public depositories participating in the collateral pool. Accordingly, the Village's deposits at year end are considered to be fully insured.

### Investments

The Village has adopted an investment policy to establish guidelines for the efficient management of its cash reserves. Section VI of the investment policy identifies permitted instruments as follows:

a. The State Board of Administration Florida Prime Fund;

b. U.S. Government obligations and U.S. Government Agency obligations;

c. Securities of, or other interests in any open-end or closed-end management type investment company or investment trust registered under the Investment Company Act of 1940, provided the portfolio of such investment company or investment trust is limited to United States Government obligations and to repurchase agreements fully collateralized by such United States Government obligations, and provided such investment company or investment trust takes delivery of such collateral either directly or through an authorized custodian;

d. Certificates of deposit and savings accounts in state-certified qualified public depositories; and,

e. Repurchase agreements.

Investments of the General Employees Pension Fund and the Police Officers Pension Fund are limited to:

a. Money Market - Money market mutual funds or short-term investment funds ("STIF") provided by the Plan's custodian must have a minimum rating of Standard & Poor's A1 or Moody's P1.

b. Equities - Equities must be traded on a national exchange or electronic network; and not more than 5% of the Plans' assets, at the time of purchase, can be invested in the common stock, capital stock or convertible stock of any one issuing company, nor can the aggregate investment in any one issuing company exceed 5% of the outstanding capital stock of the company (this restriction does not apply to any single holding within a diversified pooled fund).

## NOTE 2. DEPOSITS AND INVESTMENTS (Continued)

### Investments (Continued)

c. Fixed Income - Fixed income investments shall have a minimum rating of investment grade or higher as reported by any Nationally Recognized Statistical Rating Organization (NRSRO) at the time of purchase; and the value of bonds issued by any single corporation cannot exceed 10% of the total fund (excluding issues from the U.S. government, or agency thereof; and this restriction does not apply to any single holding within a diversified pooled fund).

d. Pooled Funds - Pooled funds may include mutual funds, commingled funds, and exchange-traded funds.

### Fair Value of Investments

The fair value of the Village's cash and cash equivalents at September 30, 2020 are as follows:

| | Unrestricted | Pension |
|---|---|---|
| Cash and cash equivalents: | | |
| Petty cash | $ 3,848 | $ - |
| Deposits with financial institutions | 32,529,168 | 547,829 |
| Investment in State Board of Administration Florida Prime Fund | 18,859,726 | - |
| Money market mutual funds | - | 1,282,400 |
| **Total cash and cash equivalents** | **$ 51,392,742** | **$ 1,830,229** |

The Village follows the provisions of GASB Statement No. 72, *Fair Value Measurement and Application*, which establishes a framework for measuring the fair value of investments in a fair value hierarchy that prioritizes the inputs to valuation techniques used to measure fair value. The hierarchy gives highest priority to unadjusted quoted prices in active markets for identical assets (Level 1 measurements) and the lowest priority to unobservable inputs (Level 3 measurements). The three levels of the fair value hierarchy under GASB Statement No. 72 are described below:

Level 1: Inputs to the valuation methodology are unadjusted quoted prices for identical assets in active markets that the Village has the ability to access at the measurement date.

Level 2: Inputs to the valuation methodology include the following:

- Quoted prices for similar assets in active markets.
- Quoted prices for identical or similar assets in inactive markets.
- Inputs other than quoted prices that are observable for the assets.
- Inputs that are derived principally from or corroborated by observable market data by correlation or other means.

If the asset has a specified contractual term, the Level 2 input must be observable for substantially the full term of the asset.

## NOTE 2. DEPOSITS AND INVESTMENTS (Continued)

### Fair Value of Investments (Continued)

Level 3: Inputs to the valuation methodology are unobservable and significant to the fair value measurement. These unobservable inputs reflect the entity's own estimates for assumptions that market participants would use in pricing the asset or liability. Valuation techniques would typically include discounted cash flow models and similar techniques, but may also include the use of market prices of assets that are not directly comparable to the subject asset.

The fair value measurement of an asset within the fair value hierarchy is based on the lowest level of any input that is significant to the fair value measurement. Valuation techniques used need to maximize the use of observable inputs and minimize the use of unobservable inputs. The categorization of an investment within the fair value hierarchy is based upon the pricing transparency of the investment and does not necessarily correspond to the Village's perceived risk of that investment.

*Valuation Methodologies:* The following valuation methods and assumptions were used by the Village in estimating the fair value of financial instruments that are measured at fair value on a recurring basis under GASB Statement No. 72.

*Domestic and foreign equity securities*: Valued at the closing price reported on the active exchange on which the individual securities are traded.

*International fixed income mutual fund and equity mutual funds*: Valued at the closing net asset value reported on the active exchange on which the investment fund is actively traded.

*U.S. Treasury, U.S. Government Agency, mortgage and asset-backed securities, and corporate bonds*: Valued at the closing price reported on the active exchange on which the individual securities are actively traded (Level 1). Securities that are not actively traded are valued by the independent investment custodian using a matrix-pricing technique based on the securities' relationship to quoted benchmark prices (Level 2).

*Investment measured at net asset value (NAV):* The real estate investment account consists of units in the U.S. Property Separate Account (the "Account") sponsored by the Principal Life Insurance Company and managed by Principal Real Estate Investors. The account is an open end, commingled real estate account valued at the unadjusted NAV per unit at September 30, 2020, based on the fair value of the underlying Account investments as determined by the Account manager. Real estate values are generally based upon periodic independent appraisals performed for assets held by the Account. The fair value of real estate is the price that would be received if the asset was sold to a market participant assuming the highest and best use of each asset at the measurement date. At September 30, 2020, the real estate investment account had no future funding commitments or lock-up periods and was redeemable with 90 days' notice, subject to approval of the fund manager and fund liquidity.

The methods and assumptions described above may produce a fair value calculation that may not be indicative of net realizable value or reflective of future fair values. Furthermore, while the Village believes its valuation methodologies are appropriate and consistent with other market participants, the use of different methodologies or assumptions to determine the fair value of certain financial instruments could result in a different fair value measurement at the reporting date. There were no changes in the methods and assumptions used for the year ended September 30, 2020.

## NOTE 2. DEPOSITS AND INVESTMENTS (Continued)

### Fair Value of Investments (Continued)

The financial assets measured at fair value on a recurring basis include the Village's pension funds' investments. There were no liabilities measured at fair value on a recurring basis at September 30, 2020. The fair value of the Village's investments at September 30, 2020 is summarized as follows:

| | Level 1 | Level 2 | Level 3 | Total |
|---|---|---|---|---|
| **Equity investments** | | | | |
| Domestic equity securities and mutual fund | $ 34,661,163 | $ - | $ - | $ 34,661,163 |
| Foreign equity securities and mutual fund | 6,643,750 | - | - | 6,643,750 |
| Total equity securities | 41,304,913 | - | - | 41,304,913 |
| **Fixed Income investments** | | | | |
| U.S. Treasury | - | 1,105,153 | - | 1,105,153 |
| U.S. Government Agency | - | 5,964,839 | - | 5,964,839 |
| Mortgage and asset-backed | - | 532,121 | - | 532,121 |
| Corporate bonds | - | 5,696,905 | - | 5,696,905 |
| International fixed income mutual fund | - | 2,302,727 | - | 2,302,727 |
| Total fixed income securities | - | 15,601,745 | - | 15,601,745 |
| Total investments by level | $ 41,304,913 | $ 15,601,745 | $ - | 56,906,658 |
| **Investment measured at NAV** | | | | |
| Real estate investment account | | | | 5,549,961 |
| Total fair value | | | | $ 62,456,619 |

Credit Risk: Credit risk is the risk that a debt issuer will not fulfill its obligations. The Village investment policy requires that pension investments in fixed income securities must be rated as investment grade (BBB or better) by a Nationally Recognized Statistical Rating Organization (NRSRO). The money market mutual funds and fixed income mutual fund are not rated. The Village utilizes ratings from Standard and Poor's and Moody's Investor Services for its investments. The NRSRO ratings for the Village's investments at September 30, 2020 are summarized as follows:

| Investment Type | NRSRO Rating | Fair Value |
|---|---|---|
| State Board of Administration Florida Prime Fund | AAAm | $ 18,859,726 |
| Pension fund investments: | | |
| U.S. Treasury | AAA | 1,105,153 |
| U.S. Government Agency | AAA | 5,449,963 |
| U.S. Government Agency | Not Rated | 514,876 |
| Mortgage and asset-backed securities | Not Rated | 532,121 |
| Domestic corporate bonds | A | 5,696,905 |
| **Total** | | **$ 32,158,744** |

## NOTE 2. DEPOSITS AND INVESTMENTS (Continued)

### Fair Value of Investments (Continued)

Interest Rate Risk: Interest rate risk is the risk that changes in interest rates will adversely affect the fair value of an investment in debt securities. Generally, the longer the time to maturity, the greater the exposure to interest rate risk. The Village does not have a formal policy that limits the maturities of its investments. The Village pension funds' investment in mortgage and asset-backed securities consist of mortgage pass-through securities based on pools of residential home mortgage loans which are subject to prepayments and therefore highly sensitive to changes in interest rates. The table below summarizes the scheduled maturities of fixed income investment securities at September 30, 2020.

| | Fair Value of Investment Maturities | | | |
|---|---|---|---|---|
| **Investment Type** | **Less Than One Year** | **One to Five Years** | **Six to Ten Years** | **More Than Ten Years** |
| Pension fund investments: | | | | |
| U.S. Treasury | $ - | $ 85,139 | $ 1,020,014 | $ - |
| U.S. Government Agency | 3,299,795 | 2,665,044 | - | - |
| Mortgage and asset-backed securities | - | 16,009 | 67,257 | 448,855 |
| Corporate bonds | - | 2,419,223 | 2,325,271 | 952,411 |
| **Total** | **$ 3,299,795** | **$ 5,185,415** | **$ 3,412,542** | **$ 1,401,266** |

The SBA Florida Prime Fund had a weighted average maturity of 48 days at September 30, 2020. The fair value and weighted average maturity of the international fixed income mutual fund were $2,302,727 and 2.3 years, respectively, at September 30, 2020.

Custodial Credit Risk: Custodial credit risk is defined as the risk that the Village may not recover cash and investments held by another party in the event of a financial failure. The Village investment policy requires cash and investments to be fully insured or collateralized, or held in independent custodial safekeeping accounts in the name of the Village. At September 30, 2020, all investments were held by an independent custodian in the name of the Village, except the State Board of Administration Florida Prime Fund and money market mutual funds which are considered *unclassified* pursuant to GASB Statement No. 3.

Concentration of Credit Risk: Concentration of credit risk is the risk of loss attributed to the magnitude of an investment in a single issuer. For investments other than the Village pension funds, there is no specific policy for concentration of credit risk. In the Village pension funds, securities of a single issuer are limited to no more than 5% of the Plan's net position invested in common stocks and debt securities. At September 30, 2020, four mutual fund investments of the Police Officers Pension Fund represented approximately 27.6%, 15.7%, 14.9% and 9.5% of that Plan's net position and four mutual fund investments of the General Employees Pension Fund represented approximately 25.2%, 9.6%, 7.5% and 6.1% of that Plan's net position. Securities of a single issuer owned by each mutual fund are less than 5% of each Plan's net position.

## NOTE 2. DEPOSITS AND INVESTMENTS (Continued)

### Fair Value of Investments (Continued)

Market Risk: The value, liquidity, and related income of certain investments in real estate and securities with contractual cash flows, such as mortgage and asset-backed securities, collateralized mortgage obligations and mutual funds investing in these securities or entities, are particularly sensitive to changes in economic conditions, including real estate value, delinquencies or defaults, or both, and may be adversely affected by shifts in the market's perception of the issuers and changes in interest rates and financial markets.

The U.S. financial markets experienced significant market fluctuations in 2020 due to the global coronavirus pandemic (COVID-19). While these market fluctuations were temporary in nature and substantially recovered by September 30, 2020, the global financial markets and the Village's investments could experience increased volatility, losses in fair value and reduced earnings if the pandemic continues and such changes could be material.

Due to the foregoing risks associated with investments, it is at least reasonably possible that changes in the values of investments will occur in the near term and such changes could materially affect the amounts reported in the accompanying financial statements.

## NOTE 3. RECEIVABLES

Receivables at September 30, 2020 are summarized as follows:

| | Governmental Activities | Business-type Activities | Total |
|---|---|---|---|
| **Receivables:** | | | |
| Accounts and other receivables | $ 597,078 | $ 3,510,510 | $ 4,107,588 |
| Intergovernmental and grants | 835,079 | - | 835,079 |
| Gross receivables | 1,432,157 | 3,510,510 | 4,942,667 |
| Less: allowance for uncollectible accounts | - | (92,897) | (92,897) |
| **Net receivables** | **$ 1,432,157** | **$ 3,417,613** | **$ 4,849,770** |

## NOTE 4. CAPITAL ASSETS

Capital assets activity for the year ended September 30, 2020 was as follows:

| Governmental Activities | Beginning Balance | Additions | Deletions | Ending Balance |
|---|---|---|---|---|
| Capital assets not being depreciated: | | | | |
| Land | $ 729,641 | $ - | $ - | $ 729,641 |
| Infrastructure | 4,656,627 | 875,641 | - | 5,532,268 |
| Construction in progress | 856,122 | 902,053 | (678,464) | 1,079,711 |
| **Total capital assets not being depreciated** | **6,242,390** | **1,777,694** | **(678,464)** | **7,341,620** |
| Capital assets being depreciated: | | | | |
| Buildings | 9,287,055 | 236,492 | - | 9,523,547 |
| Improvements other than buildings | 3,508,865 | 897,116 | - | 4,405,981 |
| Machinery and equipment | 6,629,959 | 1,204,285 | (708,637) | 7,125,607 |
| Library materials and software | 646,154 | 47,598 | (2,915) | 690,837 |
| **Total capital assets being depreciated** | **20,072,033** | **2,385,491** | **(711,552)** | **21,745,972** |
| Less accumulated depreciation for: | | | | |
| Buildings | (3,736,407) | (242,653) | - | (3,979,060) |
| Improvements other than buildings | (1,708,674) | (167,592) | - | (1,876,266) |
| Machinery and equipment | (4,178,098) | (797,868) | 707,473 | (4,268,493) |
| Library materials and software | (290,243) | (97,772) | 2,915 | (385,100) |
| **Accumulated depreciation** | **(9,913,422)** | **(1,305,885)** | **710,388** | **(10,508,919)** |
| **Governmental activities capital assets, net** | **$ 16,401,001** | **$ 2,857,300** | **$ (679,628)** | **$ 18,578,673** |
| **Business-Type Activities** | | | | |
| Capital assets not being depreciated: | | | | |
| Land | $ 379,987 | $ - | $ - | $ 379,987 |
| Infrastructure | 224,625 | 329,068 | - | 553,693 |
| Construction in progress | 1,562,072 | 459,225 | (1,076,727) | 944,570 |
| **Total capital assets not being depreciated** | **2,166,684** | **788,293** | **(1,076,727)** | **1,878,250** |
| Capital assets being depreciated: | | | | |
| Buildings | 3,512,106 | 28,048 | - | 3,540,154 |
| Improvements other than buildings | 89,215,125 | 2,436,880 | - | 91,652,005 |
| Intangible assets | 7,174,063 | - | - | 7,174,063 |
| Equipment and software | 6,084,760 | 665,123 | (442,180) | 6,307,703 |
| **Total capital assets being depreciated** | **105,986,054** | **3,130,051** | **(442,180)** | **108,673,925** |
| Less accumulated depreciation for: | | | | |
| Buildings | (2,533,785) | (56,998) | - | (2,590,783) |
| Improvements other than buildings | (46,894,964) | (2,529,182) | 59 | (49,424,087) |
| Intangible assets | (6,968,642) | - | - | (6,968,642) |
| Equipment and software | (3,946,913) | (420,073) | 437,345 | (3,929,641) |
| **Accumulated depreciation** | **(60,344,304)** | **(3,006,253)** | **437,404** | **(62,913,153)** |
| **Business-type activities Capital assets, net** | **$ 47,808,434** | **$ 912,091** | **$ (1,081,503)** | **$ 47,639,022** |

## NOTE 4. CAPITAL ASSETS (Continued)

Depreciation expense for the year ended September 30, 2020 was charged to functions as follows:

| | |
|---|---|
| **Governmental Activities:** | |
| General government | $ 222,703 |
| Public safety | 655,045 |
| Transportation | 129,268 |
| Culture/recreation | 298,869 |
| **Total depreciation expense-Governmental activities** | **$ 1,305,885** |
| **Business-type activities:** | |
| **Water & Sewer** | **$ 3,006,253** |

## NOTE 5. LONG-TERM DEBT

### Changes in Long-Term Debt

Changes in long-term debt for the year ended September 30, 2020 are summarized as follows:

| | Beginning Balance | Additions | Deletions | Ending Balance | Due Within One Year |
|---|---|---|---|---|---|
| **Governmental Activities:** | | | | | |
| General obligation note | $ 4,393,687 | $ - | $ (305,496) | $ 4,088,191 | $ 312,841 |
| Compensated absences | 738,722 | 547,672 | (384,416) | 901,978 | 95,990 |
| **Total Governmental Activities** | **$ 5,132,409** | **$ 547,672** | **$ (689,912)** | **$ 4,990,169** | **$ 408,831** |
| **Business-type Activities:** | | | | | |
| Promissory note | $ 10,775,261 | $ - | $ (633,811) | $ 10,141,450 | $ 652,355 |
| Compensated absences | 210,072 | 247,049 | (196,771) | 260,350 | 24,548 |
| **Total Business-type Activities** | **$ 10,985,333** | **$ 247,049** | **$ (830,582)** | **$ 10,401,800** | **$ 676,903** |
| **Totals** | **$ 16,117,742** | **$ 794,721** | **$ (1,520,494)** | **$ 15,391,969** | **$ 1,085,734** |

**NOTE 5. LONG-TERM DEBT (Continued)**

**Governmental Activities**

The governmental activities long-term debt consisted of the following at September 30, 2020:

$6,477,462 General Obligation Note, Series 2012

The Series 2012 G.O. Note is a general obligation Promissory Note dated February 24, 2012 for an original principal amount of $6,477,462. From February 24, 2012 to December 31, 2017, the outstanding principal amount bears interest at 2.39%, and from January 1, 2018 to February 1, 2032, the outstanding principal amount bears interest at 2.905%. Payments are due in variable semi-annual installments, including interest, on each February 1st and August 1st. The Series 2012 G.O. Note is secured by the full faith, credit and taxing power of the Village. The proceeds of the Series 2012 G.O. Note were used to refund outstanding general obligation bonds of the Village. There was no gain or loss on the refunding. The refunding reduced the Village's debt service payments by approximately $2.2 million and resulted in an economic gain of approximately $100,000.

The 2012 G.O. Note includes a provision that in the event of a default under the Loan Agreement or Note, which includes any default in the due and punctual payment of an obligation in an amount in excess of $100,000 to any other obligee, the bank may declare all obligations of the Village under the Loan Agreement and Note to be immediately due and payable.

Annual debt service requirements on the Note are as follows:

| Year Ending September 30, | Principal | Interest | Total |
|---|---|---|---|
| 2021 | $ 312,841 | $ 116,494 | $ 429,335 |
| 2022 | 320,362 | 107,352 | 427,714 |
| 2023 | 328,065 | 97,991 | 426,056 |
| 2024 | 335,953 | 88,405 | 424,358 |
| 2025 | 344,030 | 78,588 | 422,618 |
| 2026-2030 | 1,848,269 | 237,220 | 2,085,489 |
| 2031-2032 | 598,671 | 17,459 | 616,130 |
| **Total** | **$ 4,088,191** | **$ 743,509** | **$ 4,831,700** |

General obligation debt is generally liquidated by the Debt Service Fund. Compensated absences, pension liabilities and other postemployment benefit liabilities are generally liquidated by the General Fund.

**Business-type Activities**

The business-type activities long-term debt is secured by a pledge of and lien on the net revenues derived from the operations of the water and sewer system and consisted of the following for the year ended September 30, 2020:

**NOTE 5. LONG-TERM DEBT (Continued)**

**Business-Type Activities (Continued)**

$14,352,351 Promissory Note, Series 2013

The Series 2013 Note was issued April 15, 2013 for an original principal amount of $14,352,351. Semi-annual installments of $471,118, including interest at 2.905% are payable on each May 1st and November 1st through maturity on May 1, 2033. Principal and interest are payable from and secured solely by a pledge of and lien upon the net revenues of the water and sewer utility system of the Village. The proceeds of the Series 2013 Note were used for the advance refunding of the outstanding Series 2003A Revenue Bonds and provided approximately $5,000,000 for capital improvements to the water and sewer system. The advance refunding resulted in an economic gain of approximately $142,000.

The Series 2013 Note includes a provision that in the event of a default under the Loan Agreement or Note, which includes any default in the due and punctual payment of an obligation in an amount in excess of $100,000 to any other obligee, the bank may declare all obligations of the Village under the Loan Agreement and Note to be immediately due and payable.

Annual debt service requirements on the Note are as follows:

| Year Ending September 30, | Principal | Interest | Total |
|---|---|---|---|
| 2021 | $ 652,355 | $ 289,882 | $ 942,237 |
| 2022 | 671,443 | 270,794 | 942,237 |
| 2023 | 691,088 | 251,149 | 942,237 |
| 2024 | 711,308 | 230,929 | 942,237 |
| 2025 | 732,120 | 210,117 | 942,237 |
| 2026-2030 | 3,994,724 | 716,461 | 4,711,185 |
| 2031-2033 | 2,688,412 | 138,303 | 2,826,715 |
| **Total** | **$10,141,450** | **$ 2,107,635** | **$12,249,085** |

The provisions of the Series 2013 Note generally provide for:

1. Establishment of utility rates that provide net revenues which are equal to at least 125% of the principal and interest scheduled to come due in each fiscal year.
2. Prompt payment of principal and interest when due.
3. Issuance of additional debt payable from pledged revenues only if pledged revenues for the two immediately preceding fiscal years equal at least 1.25 times the largest amount of principal and interest scheduled to come due on the outstanding debt and additional debt.
4. Maintenance of the utility system in good working order.
5. Maintenance of a depository account with the lender.

At September 30, 2020 the Village was in compliance with the debt covenants.

## NOTE 5. LONG-TERM DEBT (Continued)

### Business-Type Activities (Continued)

### Utility Pledged Revenues

The Village has pledged the future net revenues (generally all revenues and capital contributions, less expenses, excluding depreciation and amortization) of the water and sewer utility to repay the Series 2013 Note. The Series 2013 Note is payable solely from the utility net revenues and is payable through 2033. Annual principal and interest payments on the Series 2013 Note are expected to require approximately 10 percent of utility net revenues. Total principal and interest remaining to be paid on the Series 2013 Note is $12,249,085 at September 30, 2020. Utility net revenues available for debt service (as defined by the Series 2013 Note debt resolution) were $9,148,219.

### Interest Expense and Arbitrage

Total interest costs incurred and paid on all Village debt for the year ended September 30, 2020 were $124,680 and $125,420, respectively, for governmental activities and $293,645 and $308,426, respectively, for business-type activities. The Village is subject to the arbitrage restrictions imposed by the federal government for its outstanding debt issues. No events have occurred that would cause the outstanding debt to be subject to arbitrage within the meaning of Section 148 of the Internal Revenue Code.

## NOTE 6. OBLIGATION UNDER UTILITY AGREEMENTS AND INTANGIBLE RIGHTS

The Village entered into two contracts dated January 1, 1978, with the City of Lake Worth (the "City"), providing that the City supply the Village's wastewater facilities for a period of 40 years. The City obtained Florida State Bond Loans, Series E and Series R, for the purpose of constructing, as well as improving, its existing water and wastewater facilities. The Village was obligated to pay the City its pro rata share (based on water and wastewater reserved capacity) of the debt service of these loans until October 31, 2006 when the loans were paid in full.

The Series E Loan was originally issued by the City on October 1, 1976, at a face value of $7,585,000. The loan matured in varying amounts through June 30, 2006. The Village's pro rata share of the loan was 20.712%. The present value (discounted at the same rate as the Series E Loan) of the Village's obligation to the City was $2,089,437 at issuance. Intangible water and wastewater usage rights were recorded at the same amount and were amortized over the 40-year contract period that the Village is entitled to use the City's water and wastewater facilities.

The Series R Loan was originally issued by the City on July 1, 1985, at a face value of $8,520,000. The loan matured in varying amounts through July 1, 2006. The Village's pro rata share of the loan was 37.04%. The present value (discounted at the same rate as the Series R Loan) of the Village's obligation to the City was $4,245,610 at issuance. Intangible water and wastewater rights were recorded at the same amount. On November 1, 1989, the City issued $10,300,000 Refunding Revenue Bonds, Series 1989, part of which was used to refund the Series R Loan and to improve the existing facilities. As a result of this refunding issue, the Village amended its original contract with the City whereby the outstanding obligation and intangible rights increased $494,876. The amendment also required the Village to pay 125% (previously 133%) of its pro rata share of the debt service payments. The intangible rights were amortized over 31 years (the remaining contract term).

## NOTE 6. OBLIGATION UNDER UTILITY AGREEMENTS AND INTANGIBLE RIGHTS (Continued)

In February 1994, the City issued $15,680,000 Sewer System Refunding Revenue Bonds, Series 1994, part of which was used to refund both the Series E and Series R Loans. As a result of this refunding issue, the Village amended its contracts with the City and the combined outstanding obligation and intangible rights increased $353,610 and the maturity date was extended to October 31, 2006. The amendment required the Village to pay 120% (previously 133% and 125% for the Series E and Series R Loans, respectively) of its pro rata share of the debt service (20% of which was to fund renewal and replacement). The additional intangible rights were amortized over 22 years (the remaining term of the amended contract). All outstanding obligations under the utility agreements were paid at maturity on October 31, 2006. During 2015, the Village sold a portion of its wastewater usage rights and the intangible rights were reduced by $214,891. During 2018, the Village paid $205,421 to the City to purchase an additional service area, which was recorded as an indefinite life intangible asset. At September 30, 2020, the intangible rights had a net book value of $205,421 and were recorded with capital assets.

## NOTE 7. INTERFUND TRANSACTIONS

Interfund transfers for the year ended September 30, 2020 were as follows:

| | Transfers In | Transfers Out |
|---|---|---|
| **Governmental Activities** | | |
| General Fund | $ 2,490,099 | $ - |
| **Business-type Activities** | | |
| Water and Sewer Utility Fund | - | 2,490,099 |
| **Total** | **$ 2,490,099** | **$ 2,490,099** |

Transfers consist of payments in lieu of taxes of $2,490,099 that are not payments for services.

## NOTE 8. RISK MANAGEMENT

The Village is exposed to various risks of loss related to torts; thefts of, damage to and destruction of assets; errors and omissions; and natural disasters for which the Village carries commercial insurance. Specifically, the Village purchases commercial insurance for property, medical benefits, worker's compensation, general liability, automobile liability, errors and omissions, and directors and officers liability. The Village is also covered by Florida Statutes under the Doctrine of Sovereign Immunity which effectively limits the amount of liability of municipalities to individual claims of $200,000 and $300,000 in the aggregate. There were no significant reductions in insurance coverage from the prior year. There were no settlements in excess of coverage in the years ended September 30, 2020, 2019, and 2018.

## NOTE 9. EMPLOYEE RETIREMENT PLANS

The Village administers two single-employer, defined benefit pension plans, the Village of Palm Springs General Employees Pension Plan and the Village of Palm Springs Police Officers Pension Plan. The Village also participates in the Florida Retirement System (FRS) Pension Plan and the Retiree Health Insurance Subsidy (HIS) Trust Fund, both of which are multiple-employer, cost-sharing, defined benefit, public employee retirement plans administered by the State of Florida. The net pension liability (asset), deferred outflows and inflows of resources and pension expense related to these retirement plans at September 30, 2020 are summarized as follows:

| | General Employees | Police Officers | FRS | HIS | Total |
|---|---|---|---|---|---|
| **Net pension asset** | $ (747,394) | $ (1,115,736) | $ - | $ - | $ (1,863,130) |
| **Net pension liability** | - | - | 10,354,989 | 2,647,593 | 13,002,582 |
| **Deferred outflows/inflows of resources related to pensions** | | | | | |
| Deferred outflows of resources | 43,524 | 77,504 | 3,522,030 | 763,041 | 4,406,099 |
| Deferred inflows of resources | 1,121,037 | 871,276 | 249,680 | 155,989 | 2,397,982 |
| **Pension expense** | (503,520) | (79,370) | 2,328,818 | 335,150 | 2,081,078 |

### Village Pension Plans

The Village sponsored two separate single-employer defined benefit plans for 2020: the Village of Palm Springs General Employees Pension Plan, covering substantially all other full-time Village employees hired prior to July 1, 2010; and, the Village of Palm Springs Police Officers Pension Plan covering all Village police officers hired prior to July 1, 2010. During 2010, the Village adopted ordinances closing both Plans to new members effective June 30, 2010. Participants in the Plans were given the option to remain in their respective Plan or to join the Florida Retirement System (FRS) effective July 1, 2010. Both closed Plans are reported as pension trust funds included in the Village's reporting entity. Employees hired after June 30, 2010 are required to participate in FRS.

Each Plan has its own Board of Trustees which acts as plan administrator and trustee. The Board of the General Employees Pension Plan consists of five members, two of which are elected by Village employees (excluding police officers) for a four year term, one member of the Village Council, the Village Manager and one resident chosen by a majority of the other four trustees and appointed by the Village Council. The Board of the Police Officers Pension Plan consists of five members, two of which are elected by police officers, two of which are residents of the Village appointed by the Village Council and one member chosen by a majority of the other four trustees and appointed by the Village Council. Each Trustee serves a two year term with no term limits.

Each Plan's assets may only be used for the payment of benefits to the members and beneficiaries of the Plan in accordance with the terms of each plan document. The costs of administering each Plan are paid by the pension fund. Plan provisions are established by and may be amended by the Village Council. Village contribution requirements are determined by each Plan's actuary and are paid by the General Fund and Water and Sewer Utility Fund. Employee contribution requirements are established by and may be amended by the Village Council. There are no legal or contractual maximum contribution rates. The Florida Constitution requires local governments to make the actuarially determined contribution. The Florida Division of Retirement reviews and approves each local government's actuarial report prior to its being approved for use for funding purposes.

## NOTE 9. EMPLOYEE RETIREMENT PLANS (Continued)

### Village Pension Plans (Continued)

The following summary of the significant provisions of each Plan was obtained from the respective actuarial reports and Village information for the two Village pension plans as of October 1, 2020 (the latest actuarial valuation date):

| | General Employees | Police Officers | | |
|---|---|---|---|---|
| **Accounting Policies and Plan Assets:** | | | | |
| Authority | Village Ordinance | Village Ordinance/State Statute | | |
| Basis of Accounting | Accrual | Accrual | | |
| Asset Valuation | | | | |
| Reporting | Fair Value | Fair Value | | |
| Actuarial Valuation | 5-year smoothed market | 4-year smoothed market | | |
| Plan Reserves | None | None | | |
| Long-Term Receivables | None | None | | |
| **Membership and Plan Provisions:** | | | | |
| **Members**: | | | | |
| Active Participants | 31 | 15 | | |
| Retirees and Beneficiaries | 53 | 27 | | |
| Terminated Vested | 42 | 10 | | |
| **Normal Retirement Benefits:** | | **Option 1** | **Option 2** | **Option 3** |
| Retirement Age | 62 | 50 | 55 | Any |
| Years of Service (minimum) | 5 | 15 | 10 | 20 |
| Accrual | 2.5% | 3.0% | 3.0% | 3.0% |
| Maximum | 62.5% | None | None | None |
| Years to Vest | 10 | 10 | 10 | 10 |
| **Actuarial Contributions** (as a percentage of covered payroll): | | | | |
| Village | 50.6% | 42.8% | | |
| State | N/A | 8.3% | | |
| Participants | 3.0% | 5.9% | | |
| Required contributions | $ 887,452 | $ 758,756 | | |
| Contributions made | $ 933,633 | $ 945,003 | | |

### Summary of Significant Accounting Policies

The financial statements of each Plan are prepared using the economic resources measurement focus and the accrual basis of accounting. Employee and employer contributions are recognized in the period in which employee services are performed. Benefits and refunds are recognized when due and payable in accordance with the terms of the Plan. Other expenses are recognized when the corresponding liabilities are incurred. Investment income is recognized as revenue when earned. Investments are reported at fair value and are managed by third party money managers.

## NOTE 9. EMPLOYEE RETIREMENT PLANS (Continued)

### Village Pension Plans (Continued)

### Summary of Significant Accounting Policies (Continued)

The Village's independent custodians and money managers determine the fair value of securities, which is generally based upon the mean of the most recent bid and ask prices of each instrument using various third party pricing sources. The net appreciation (depreciation) in fair value of investments is recorded as an increase (decrease) to investment income based on the valuation of investments. Investment earnings are reduced for investment related expenses, such as management fees, portfolio evaluation and custodial services. Benefit payments, including refunds of employee contributions, are recognized when due and payable in accordance with the benefit terms.

### Investments

Investment Policy: The policy in regard to the allocation of invested assets is established and may be amended by a majority vote of the Board of each pension plan. It is the policy of each pension plan Board to pursue an investment strategy that reduces risk through the prudent diversification of the investment portfolio across a broad selection of distinct asset classes. The investment policy of each pension plan discourages the use of cash equivalents, except for liquidity purposes, and aims to refrain from dramatically shifting asset class allocations over short time spans. There were no changes in the investment policy of either pension plan for the year ended September 30, 2020. The asset allocation policy adopted by each pension plans' Board at September 30, 2020 was as follows:

| Asset Class | General Employees | Police Officers |
|---|---|---|
| Domestic equity | 50% | 55% |
| International equity | 15 | 10 |
| Domestic fixed income | 20 | 20 |
| International fixed income | 5 | 5 |
| Real estate | 10 | 10 |
| **Total** | **100%** | **100%** |

Concentrations: At September 30, 2020, four mutual fund investments of the General Employees Pension Fund represented 25.2%, 9.6%, 7.5% and 6.1% of that Plan's net position and four mutual fund investments of the Police Officers Pension Fund represented approximately 27.6%, 15.7%, 14.9% and 9.5% of that Plan's net position.

Rate of Return: For the year ended September 30, 2020, the annual money-weighted rate of return on each pension plans' investments, net of investment expenses, was 5.86% and 10.05% for the General Employees Pension Plan and Police Officers Pension Plan, respectively. The money-weighted rate of return expresses investment performance, net of investment expenses, adjusted for the changing amounts actually invested.

### Deferred Retirement Option Program (DROP)

The Police Officers Pension Plan members are eligible to participate in DROP upon attainment of normal retirement date. DROP allows Plan members to retire while continuing employment for up to 60 months and the member's retirement benefits accumulate in the Plan. The amount held in DROP at September 30, 2020 was $700,567. The General Employees Pension Plan has no DROP.

## NOTE 9. EMPLOYEE RETIREMENT PLANS (Continued)

### Village Pension Plans (Continued)

### Net Pension Liability

The components of the net pension liability for the General Employees and Police Officers Pension Plans for the most recent valuation as of October 1, 2020, were as follows:

| | General Employees | Police Officers |
|---|---|---|
| Total pension liability | $ 28,334,906 | $ 34,101,285 |
| Plan fiduciary net position | (29,082,300) | (35,217,021) |
| **Net pension liability (asset)** | $ (747,394) | $ (1,115,736) |
| **Plan fiduciary net position as a percentage of the total pension liability** | **102.6%** | **103.3%** |

Actuarial Assumptions: The total pension liabilities for the General Employees and Police Officers Pension Plans were determined by actuarial valuations as of October 1, 2020, using the following actuarial assumptions, applied to all periods included in the measurement:

| | General Employees | Police Officers |
|---|---|---|
| **Actuarial Valuation:** | | |
| Frequency | Annual | Annual |
| Latest Valuation | 10/1/2020 | 10/1/2020 |
| Measurement date | 9/30/2020 | 9/30/2020 |
| Basis for Contribution | 10/1/2018 | 10/1/2018 |
| Cost Method | Entry age normal | Entry age normal |
| **Assumptions:** | | |
| Investment Earnings (with inflation, net of expenses) | 6.25% / year | 6.75% / year |
| Salary Increases (with inflation) | 4.6% - 8.3% / year | 4.0% - 5.25% / year |
| Inflation | 2.0% / year | 2.75% / year |
| Cost of living adjustments | 3.0% | 3.0% |
| Mortality Rates | PUB-2010 base table with Scale MP-2018 | PUB-2010 base table with Scale MP-2018 |
| **Amortization:** | | |
| Method | Level dollar | Level percent of payroll |
| Period | 5 years | 15 years for gains (losses)<br>15 years for assumption, plan and method changes |
| Open/Closed | Closed | Closed |

The long-term expected rate of return on investments of the pension plans was determined using a building block method in which best estimate ranges of expected future real rates of return (expected returns, net of pension plan investment expenses and inflation) are developed for each major asset class. These ranges are combined to produce the long-term expected rate of return by

## NOTE 9. EMPLOYEE RETIREMENT PLANS (Continued)

### Village Pension Plans (Continued)

### Net Pension Liability (Continued)

weighting the expected future real rates of return by the target asset allocation percentage and by adding expected inflation. Best estimates of arithmetic real rates of return for each major asset class included in the pension plans' target allocation as of September 30, 2020 (see the discussion of each pension plan's investment policy) are summarized in the following table:

| | Long-Term Expected Real Rate of Return | |
|---|---|---|
| | **General Employees** | **Police Officers** |
| **Asset Class** | | |
| Domestic equity | 7.5% | 7.5% |
| International equity | 8.5 | 8.5 |
| Domestic fixed income | 2.5 | 2.5 |
| International fixed income | 3.5 | 3.5 |
| Real estate | 4.5 | 4.5 |

Discount Rate: The discount rate used to measure the total pension liability of the General Employees Pension Plan was 6.25% (6.25% in 2019) and the Police Officers Pension Plan was 6.75% (7.25% in 2019). The discount rates were based on the expected rate of return on investments of each plan. The projection of cash flows used to determine the discount rate assumed that plan member contributions will be made at the current contribution rates and that Village contributions will be made at rates equal to the difference between actuarially determined contribution rates and the member rate. Based on those assumptions, the pension plans' fiduciary net positions were projected to be available to make all projected future benefit payments of current plan members. Therefore, the long-term expected rate of return on investments of the pension plans was applied to all periods of projected benefit payments to determine the projected total pension liability.

### Changes in the Net Pension Liability (Asset)

The changes in the net pension liability (asset) of the Village's General Employees Pension Plan were as follows for the year ended September 30, 2020:

| | Increase (Decrease) | | |
|---|---|---|---|
| **General Employees Pension Plan** | **Total Pension Liability** | **Plan Fiduciary Net Position** | **Net Pension Liability (Asset)** |
| **Balances at October 1, 2019** | $ 28,902,543 | $ 27,075,734 | $ 1,826,809 |
| **Changes for the Current Year** | | | |
| Service cost | 357,165 | - | 357,165 |
| Interest | 1,794,730 | - | 1,794,730 |
| Difference between expected and actual experience | (877,264) | - | (877,264) |
| Change of assumptions | (745,073) | - | (745,073) |

**NOTE 9. EMPLOYEE RETIREMENT PLANS (Continued)**

**Village Pension Plans (Continued)**

**Changes in the Net Pension Liability (Asset) (Continued)**

| General Employees Pension Plan (Continued) | Total Pension Liability | Plan Fiduciary Net Position | Net Pension Liability (Asset) |
|---|---|---|---|
| Contributions – Village | $ - | $ 933,633 | $ (933,633) |
| Contributions – employee | - | 55,317 | (55,317) |
| Net investment income | - | 2,189,116 | (2,189,116) |
| Benefit payments, including refunds of employee contributions | (1,097,195) | (1,097,195) | - |
| Administrative expenses | - | (74,305) | 74,305 |
| Net Changes | (567,637) | 2,006,566 | (2,574,203) |
| **Balances at September 30, 2020** | $ 28,334,906 | $ 29,082,300 | $ (747,394) |

The changes in the net pension liability (asset) of the Village's Police Officers Pension Plan were as follows for the year ended September 30, 2020:

| | Increase (Decrease) | | |
|---|---|---|---|
| Police Officers Pension Plan | Total Pension Liability | Plan Fiduciary Net Position | Net Pension Liability (Asset) |
| **Balances at October 1, 2019** | $ 32,321,724 | $ 31,978,903 | $ 342,821 |
| **Changes for the Current Year** | | | |
| Service cost | 332,692 | - | 332,692 |
| Interest | 2,313,118 | - | 2,313,118 |
| Difference between expected and actual experience | 852,542 | - | 852,542 |
| Change of assumptions | (709,083) | - | (709,083) |
| Contributions – Village | - | 791,883 | (791,883) |
| Contributions – State of Florida | - | 153,120 | (153,120) |
| Contributions – employee | - | 109,215 | (109,215) |
| Net investment income | - | 3,269,990 | (3,269,990) |
| Benefit payments, including refunds of employee contributions | (1,009,708) | (1,009,708) | - |
| Administrative expenses | - | (76,382) | 76,382 |
| Net Changes | 1,779,561 | 3,238,118 | (1,458,557) |
| **Balances at September 30, 2020** | $ 34,101,285 | $ 35,217,021 | $ (1,115,736) |

## NOTE 9. EMPLOYEE RETIREMENT PLANS (Continued)

### Village Pension Plans (Continued)

### Changes in the Net Pension Liability (Asset) (Continued)

Sensitivity of the Net Pension Liability to Changes in the Discount Rate: The following table presents the net pension liability (asset) of the General Employees Pension Plan and the Police Officers Pension Plan at September 30, 2020, calculated using the current discount rates of 6.25% and 6.75%, respectively, as well as what the net pension liability (asset) would be if it were calculated using a discount rate that is one percentage point lower or one percentage point higher than the current rate:

| | 1.0% Decrease | Current Discount Rate | 1.0% Increase |
|---|---|---|---|
| General Employees Pension Plan | $ 3,179,928 | $ (747,394) | $ (3,981,011) |
| Police Officers Pension Plan | $ 3,351,051 | $ (1,115,736) | $ (4,774,258) |

### Pension Expense and Deferred Inflows/Outflows of Resources Related to Pensions

General Employees Pension Plan: For the year ended September 30, 2020, the Village recognized pension expense of $(503,520). At September 30, 2020, the Village reported deferred inflows/outflows of resources related to General Employees pensions from the following sources:

| General Employees Pension Plan | Deferred Outflows | Deferred Inflows |
|---|---|---|
| Differences between expected and actual experience | $ - | $ 442,304 |
| Net difference between projected and actual investment earnings on pension plan investments | - | 325,804 |
| Change of assumptions | 43,524 | 352,929 |
| **Balances at September 30, 2020** | **$ 43,524** | **$ 1,121,037** |

Police Officers Pension Plan: For the year ended September 30, 2020, the Village recognized pension expense of $(79,370). At September 30, 2020, the Village reported deferred inflows/outflows of resources related to Police Officers pensions from the following sources:

| Police Officers Pension Plan | Deferred Outflows | Deferred Inflows |
|---|---|---|
| Differences between expected and actual experience | $ 77,504 | $ - |
| Net difference between projected and actual investment earnings on pension plan investments | - | 64,462 |
| Change of assumptions | - | 806,814 |
| **Balances at September 30, 2020** | **$ 77,504** | **$ 871,276** |

## NOTE 9. EMPLOYEE RETIREMENT PLANS (Continued)

### Village Pension Plans (Continued)

### Pension Expense and Deferred Inflows/Outflows of Resources Related to Pensions (Continued)

The amounts reported as deferred inflows/outflows of resources related to pensions will be recognized in pension expense as follows:

| Year Ending September 30, | General Employees | Police Officers |
|---|---|---|
| 2021 | $ (1,021,789) | $ (393,782) |
| 2022 | (42,517) | (165,391) |
| 2023 | 85,269 | (45,839) |
| 2024 | (98,476) | (188,760) |

### Financial Statements

The General Employees Pension Plan and the Police Officers Pension Plan do not issue stand-alone GAAP financial reports. Financial statements for the General Employees Pension Plan and the Police Officers Pension Plan as of and for the year ended September 30, 2020, are as follows:

| Statements of Fiduciary Net Position | General Employees | Police Officers |
|---|---|---|
| **Assets** | | |
| Cash and cash equivalents | $ 1,273,633 | $ 556,596 |
| Receivables: | | |
| Interest and dividends receivable | 29,043 | 30,162 |
| Investments: | | |
| U.S. Treasury securities | 673,401 | 431,752 |
| U.S. Government agencies | 3,014,768 | 2,950,071 |
| Mortgage and asset-backed securities | 206,698 | 325,423 |
| Domestic corporate bonds | 2,844,511 | 2,852,394 |
| International fixed income mutual fund | 1,009,728 | 1,292,999 |
| Domestic equity securities and mutual fund | 14,175,799 | 20,485,364 |
| Foreign equity securities and mutual fund | 3,291,255 | 3,352,495 |
| Real estate investment account | 2,588,973 | 2,960,988 |
| **Total assets** | **29,107,809** | **35,238,244** |
| **Liabilities** | | |
| Accounts payable | 25,509 | 21,223 |
| **Total liabilities** | **25,509** | **21,223** |
| **Net position restricted for pension benefits** | **$ 29,082,300** | **$ 35,217,021** |

## NOTE 9. EMPLOYEE RETIREMENT PLANS (Continued)

### Village Pension Plans (Continued)

### Financial Statements (Continued)

| Statements of Changes in Fiduciary Net Position | General Employees | Police Officers |
|---|---|---|
| **Additions** | | |
| Contributions: | | |
| Employer | $ 933,633 | $ 791,883 |
| Plan members | 55,317 | 109,215 |
| State contributions | - | 153,120 |
| **Total contributions** | **988,950** | **1,054,218** |
| Investment income: | | |
| Interest | 146,268 | 151,975 |
| Dividends | 476,310 | 1,226,499 |
| Net increase in fair value of investments | 1,614,234 | 1,920,823 |
| Investment expenses | (47,696) | (29,307) |
| Net investment income | 2,189,116 | 3,269,990 |
| **Total additions** | **3,178,066** | **4,324,208** |
| **Deductions** | | |
| Administration | 74,305 | 76,382 |
| Benefits | 1,097,195 | 1,009,708 |
| **Total deductions** | **1,171,500** | **1,086,090** |
| Net increase in plan net position | 2,006,566 | 3,238,118 |
| Net position restricted for pension benefits at October 1, 2019 | 27,075,734 | 31,978,903 |
| **Net position restricted for pension benefits at September 30, 2020** | **$ 29,082,300** | **$ 35,217,021** |

### State of Florida Pension Plans

All regular, full-time employees of the Village, including police officers, hired after June 30, 2010 are required to participate in the Florida Retirement System (FRS) Pension Plan and the Retiree Health Insurance Subsidy (HIS) Trust Fund administered by the Florida Department of Management Services, Division of Retirement. FRS and HIS are cost-sharing, multiple-employer defined benefit pension plans with approximately 1,000 participating employers. FRS and HIS were established and are administered in accordance with Chapter 121 and Section 112.363, Florida Statutes, respectively.

FRS includes a Deferred Retirement Option Program (DROP) available for eligible employees. Retirees receive a lifetime pension benefit with joint and survivor payment options. FRS membership is compulsory for employees filling regularly established positions in a state agency, county agency, state university, state community college, or district school board, unless restricted from FRS membership under sections 121.053 and 121.122, Florida Statutes, or allowed to participate in a defined contribution plan in lieu of FRS membership. Participation is optional for cities, municipalities, special districts, charter schools and metropolitan planning organizations.

## NOTE 9. EMPLOYEE RETIREMENT PLANS (Continued)

### State of Florida Pension Plans (Continued)

HIS membership is optional and available to all retirees under a state-administered retirement system, provided the retiree provides proof of health insurance coverage, which can include Medicare. Participation is compulsory for cities, municipalities, special districts, charter schools and metropolitan planning organizations that participate in FRS.

Benefits Provided: FRS provides retirement, survivor and disability benefits to plan members and beneficiaries. Pension benefits of FRS are established by Florida Statutes, Chapter 121, and may be amended by the Florida Legislature. Retirement benefits are computed on the basis of age and/or years of service, average final compensation and service credit. Members initially enrolled prior to July 1, 2011, vest after six years of service. Members initially enrolled on or after July 1, 2011, vest after eight years of creditable service. HIS provides retirees and beneficiaries a monthly benefit equal to the number of years of creditable service completed at the time of retirement multiplied by $5. The monthly benefit payment is established by Section 112.363, Florida Statutes and is at least $30, but not more than $150.

Village Contributions: FRS members are required to contribute 3.0% and no contribution is required for HIS members. Participating governments, including the Village, contribute to FRS at actuarially determined rates for various classes of employees, which are presently 8.47% of annual covered payroll for employees covered in the regular class, 25.41% for senior management class, 25.48% for special risk class (police officers), 48.82% for elected officials and 14.60% for employees covered in the FRS DROP program. Participating governments, including the Village, contribute to HIS based on a percentage of gross compensation for all active FRS members, which is presently 1.66%. The Village's contributions to FRS and HIS for the year ended September 30, 2020 were $925,385, which was equal to 100% of the required contributions for the year.

Funding Policy: FRS funding policy provides for monthly employer contributions at actuarially determined rates that, expressed as percentages of annual covered payroll, are adequate to accumulate sufficient assets to pay benefits when due based upon plan assumptions. HIS uses a pay-as-you-go funding policy based on monthly employer contributions at a flat percentage of gross compensation for all active FRS members. Employer and employee contribution rates are established by State law as a level percentage of payroll. Employer contribution rates are determined using the entry-age actuarial cost method. The consulting actuary recommends rates based on the annual valuation, but actual contribution rates are established by the Florida Legislature.

Publicly Available Financial Report: The State of Florida issues a publicly available financial report for FRS and HIS that includes financial statements and required supplementary information. The complete financial report is available on the Publications page of the Division of Retirement's website at www.frs.myflorida.com or by writing to the Research and Education Section at P.O. Box 9000, Tallahassee, Florida, 32315-9000 or by calling toll free 877-377-1737 or 850-488-5706.

Summary of Significant Accounting Policies: The financial statements of FRS and HIS are prepared using the flow of economic resources measurement focus and the accrual basis of accounting. Employee contributions are recognized in the period of time for which the contributions are assessed. Employer contributions are recognized in the period in which employee services are performed. Benefit payments, including refunds of employee contributions, are recognized when due and payable in accordance with the terms of FRS and HIS. Other expenses are recognized when

## NOTE 9. EMPLOYEE RETIREMENT PLANS (Continued)

### State of Florida Pension Plans (Continued)

the corresponding liabilities are incurred. Investment income is recognized as revenue when earned. Investments are reported at fair value and are managed by external investment managers. The independent investment custodian for FRS and HIS determines the fair value of securities using various third party pricing sources. For private market investments, where no readily ascertainable market value exists, fair values are based on net asset value (capital account balance) provided by investment managers at the closest available reporting period and adjusted for subsequent contributions and distributions. The net appreciation (depreciation) in fair value of investments is recorded as an increase (decrease) to investment income based on the valuation of investments. Investment earnings are net of investment related expenses, such as management fees, portfolio evaluation and custodial services. For purposes of measuring the net pension liability, deferred inflows/outflows of resources related to pensions, and pension expense, information about the fiduciary net position of FRS and HIS and the additions to/deductions from the fiduciary net position have been determined on the same basis as they are reported by FRS and HIS.

**Pension Liabilities, Pension Expense, and Deferred Inflows/Outflows of Resources Related to Pensions**

At September 30, 2020, the Village reported a liability of $10,354,989 and $2,647,593 for its proportionate share of the net pension liability of FRS and HIS, respectively. The net pension liability of each plan was measured as of June 30, 2020, and the total pension liability used to calculate the net pension liability was determined by an actuarial valuation as of July 1, 2020 for FRS and HIS. The Village's proportion of the net pension liability was based on a projection of the Village's long-term share of contributions to the pension plan relative to the projected contributions of all participating governments, as actuarially determined. At June 30, 2020, the Village's FRS proportion was .023891640 percent, which was a decrease of .001180054 percent from its proportion measured as of June 30, 2019. The HIS proportion was .021684100 percent at June 30, 2020, which was an increase of .000651432 percent from its proportion measured as of June 30, 2019.

For the year ended September 30, 2020, the Village recognized pension expense of $2,663,968 for FRS and HIS. At September 30, 2020, the Village reported deferred outflows and inflows of resources related to FRS pensions from the following sources:

| | Deferred Outflows | Deferred Inflows |
|---|---|---|
| Differences between expected and actual experience | $ 396,306 | $ - |
| Changes in assumptions | 1,874,582 | - |
| Net difference between projected and actual investment earnings on pension plan investments | 616,546 | - |
| Changes in proportion and differences between Village contributions and proportionate share of contributions | 427,520 | 249,680 |
| Village contributions subsequent to the measurement date | 207,076 | - |
| **Total** | **$ 3,522,030** | **$ 249,680** |

## NOTE 9. EMPLOYEE RETIREMENT PLANS (Continued)

### State of Florida Pension Plans (Continued)

### Pension Liabilities, Pension Expense, and Deferred Inflows/Outflows of Resources Related to Pensions (Continued)

At September 30, 2020 the Village reported deferred outflows and inflows of resources related to HIS pensions from the following sources:

| | Deferred Outflows | Deferred Inflows |
|---|---|---|
| Differences between expected and actual experience | $ 108,303 | $ 2,042 |
| Changes in assumptions | 284,692 | 153,947 |
| Net difference between projected and actual investment earnings on pension plan investments | 2,114 | - |
| Changes in proportion and differences between Village contributions and proportionate share of contributions | 337,309 | - |
| Village contributions subsequent to the measurement date | 30,623 | - |
| **Total** | **$ 763,041** | **$ 155,989** |

Deferred outflows of resources related to FRS and HIS pensions of $237,699 resulting from Village contributions subsequent to the measurement date of June 30, 2020 will be recognized as a reduction of the net pension liability in the year ended September 30, 2020. Other amounts reported as deferred inflows and outflows of resources related to pensions will be recognized in pension expense as follows:

| Year Ending September 30, | FRS Amount | HIS Amount |
|---|---|---|
| 2021 | $ 631,679 | $ 159,530 |
| 2022 | 983,803 | 118,335 |
| 2023 | 836,228 | 32,336 |
| 2024 | 499,901 | 75,086 |
| 2025 | 113,663 | 102,245 |
| Thereafter | - | 88,897 |

## NOTE 9. EMPLOYEE RETIREMENT PLANS (Continued)

### State of Florida Pension Plans (Continued)

### Pension Liabilities, Pension Expense, and Deferred Inflows/Outflows of Resources Related to Pensions (Continued)

Actuarial Assumptions: The total pension liability for FRS and HIS in the most recent actuarial valuations was determined using the following actuarial assumptions, applied to all periods included in the measurement:

| | FRS | HIS |
|---|---|---|
| Valuation date | July 1, 2020 | July 1, 2020 |
| Measurement date | June 30, 2020 | June 30, 2020 |
| Actuarial cost method | Individual Entry Age | Individual Entry Age |
| Amortization method | Level percent of pay, closed | Level percent of pay, closed |
| Equivalent single amortization period | 30 years | 30 years |
| Asset valuation method | 5-year smoothed | Market value |
| Discount rate | 6.8% | 2.21% |
| Inflation | 2.4% | 2.4% |
| Salary increases, including inflation | 3.25% | 3.25% |
| Long-term expected rate of return, net of investment expenses | 6.8% | N/A |
| Municipal bond rate | N/A | 2.21% |
| Payroll growth | 3.25% | 3.25% |
| Cost of living adjustments | 3.0% pre-July 2011<br>0% thereafter | N/A |
| Mortality rates | Mortality rates<br>PUB-2010 base table with Scale MP-2018 | Mortality rates<br>PUB-2010 base table with Scale MP-2018 |

The actuarial assumptions used in the July 1, 2020 actuarial valuation were based on the results of an actuarial experience study for the period July 1, 2013 to June 30, 2018.

Changes in Actuarial Assumptions: The discount rate for FRS changed from 6.9% for 2019 to 6.8% for 2020. The discount rate for HIS changed from 3.50% for 2019 to 2.21% for 2020. The initial amortization period for assumption, method and plan changes was reduced from 30 years to 25 years effective July 1, 2020. The inflation assumption was reduced form 2.6% to 2.4% for 2020.

Long-term Expected Rate of Return: The long-term expected rate of return on FRS investments was determined using a building block method in which best estimate ranges of expected future real rates of return (expected returns, net of pension plan investment expenses and inflation) are developed for each major asset class. These ranges are combined to produce the long-term expected

## NOTE 9. EMPLOYEE RETIREMENT PLANS (Continued)

### State of Florida Pension Plans (Continued)

### Pension Liabilities, Pension Expense, and Deferred Inflows/Outflows of Resources Related to Pensions (Continued)

rate of return by weighting the expected future real rates of return by the target asset allocation percentage and by adding expected inflation. Best estimates of annual arithmetic real rates of return for each major asset class are as follows:

| | Long-Term Expected Real Rate of Return |
|---|---|
| **Asset Class** | |
| Cash equivalents | 2.2% |
| Fixed income | 3.0 |
| Global equity | 8.0 |
| Private equity | 10.8 |
| Real estate | 6.4 |
| Strategic investments | 5.5 |

Discount Rate: The discount rate used to measure the total pension liability of FRS at June 30, 2020 was 6.8% for FRS and 2.21% for HIS. The FRS discount rate was based on the expected rate of return on FRS investments. The HIS discount rate was based on the municipal bond rate. The projection of cash flows used to determine the discount rate assumed that employee contributions will be made at the current contribution rates and that member contributions will be made at rates equal to the difference between actuarially determined contribution rates and the employee rate. Based on those assumptions, the fiduciary net position of FRS was projected to be available to make all projected future benefit payments of current active and inactive employees. Therefore, the long-term expected rate of return on investments of FRS was applied to all periods of projected benefit payments to determine the projected total pension liability. Because HIS uses a pay-as-you-go funding structure, a municipal bond rate of 2.21% was used to determine the total pension liability.

Sensitivity of the Village's Proportionate Share of the Net Pension Liability to Changes in the Discount Rate: The following table presents the Village's proportionate share of the net pension liability of FRS and HIS at September 30, 2020, calculated using the current discount rate, as well as what the Village's proportionate share of the net pension liability would be if it were calculated using a discount rate that is one percentage point lower or one percentage point higher than the current rate:

| FRS | | | HIS | | |
|---|---|---|---|---|---|
| 1.0% Decrease (5.8%) | Current Discount Rate (6.8%) | 1.0% Increase (7.8%) | 1.0% Decrease (1.21%) | Current Discount Rate (2.21%) | 1.0% Increase (3.21%) |
| $ 16,535,177 | $ 10,354,989 | $ 5,193,269 | $ 3,060,500 | $ 2,647,593 | $ 2,309,631 |

## NOTE 9. EMPLOYEE RETIREMENT PLANS (Continued)

### State of Florida Pension Plans (Continued)

### Pension Liabilities, Pension Expense, and Deferred Inflows/Outflows of Resources Related to Pensions (Continued)

Pension Plan Fiduciary Net Position: Detailed information about the fiduciary net position of FRS and HIS is available in a separately issued financial report, which is available on the Publications page of the Division of Retirement's website at www.frs.myflorida.com or by writing to the Research and Education Section at P.O. Box 9000, Tallahassee, Florida, 32315-9000 or by calling toll free 877-377-1737 or 850-488-5706.

### Payables to FRS

There were no amounts payable to FRS by the Village at September 30, 2020.

## NOTE 10. POSTEMPLOYMENT BENEFITS OTHER THAN PENSIONS

### Plan Description

The Village administers a single-employer defined benefit health care plan (the "Plan") that provides health care benefits to eligible retired employees and their beneficiaries. The Village Council has the authority to establish and amend the premiums for and the benefit provisions of the Plan. The Plan is financed on a "pay-as-you-go" basis and is not administered as a formal qualifying trust. The Plan does not issue a publicly available financial report.

### Funding Policy

The Village is required by Florida Statute 112.0801 to allow retirees to buy healthcare coverage at the same *group insurance rates* that current employees are charged resulting in an *implicit* healthcare benefit. The State of Florida prohibits the Plan from separately rating retirees and active employees. The Plan therefore charges both groups an equal, blended rate premium. Although both groups are charged the same blended rate premium, GAAP requires the actuarial figures to be calculated using age adjusted premiums approximating claim costs for retirees separate from active employees. The use of age adjusted premiums results in the addition of the implicit rate subsidy into the actuarial accrued liability. Plan members receiving benefits contribute 100% of the monthly premium ranging from a minimum of $608 to a maximum of $1,830.

### Plan Membership

Membership in the Plan was comprised of the following at October 1, 2017, the date of the latest actuarial valuation:

| | |
|---|---|
| Active employees | 167 |
| Retirees and beneficiaries receiving benefits | 5 |
| Inactive employees | 0 |
| Total | 172 |

## NOTE 10. POSTEMPLOYMENT BENEFITS OTHER THAN PENSIONS (Continued)

### Total OPEB Liability

The Village's total OPEB liability of $578,459 was measured as of September 30, 2020, and was determined by an actuarial valuation as of October 1, 2019.

Actuarial Methods and Significant Assumptions: The actuarial methods and significant assumptions used to determine the Village's total OPEB liability for the current year are summarized as follows:

| | |
|---|---|
| **Actuarial Valuation:** | |
| Valuation Date | 10/1/2019 with 9/30/2020 measurement date |
| Actuarial Cost Method | Entry age normal, level percent of pay |
| **Assumptions:** | |
| Asset Valuation Method | N/A (1) |
| Discount Rate | 2.14% (2) |
| Post-retirement Benefit Increases | None |
| Health Care Cost Trend Rate | 8.0% per year initially, reduced annually by .5% to an ultimate rate of 5.0% |
| Inflation Rate | 3.0% |
| Projected Salary Increases | 3.0% |
| Mortality Rates | RP-2006 Mortality Table with MP2019 projection |
| **Amortization:** | |
| Method | Average of expected future working lifetime of the active group |
| Remaining Amortization Period | 13 years |

(1) The plan is funded on a pay-as-you-go basis and is not administered as a formal qualifying trust. There were no plan assets as of September 30, 2020.

(2) Since there are currently no invested plan assets held in trust to finance the OPEB obligation, the discount rate is the long-term expected rate of return on tax-exempt, high quality municipal bonds based on the S&P AA Municipal Bond 20-year High Grade Rate Index as of September 30, 2020.

### Changes in the Total OPEB Liability

The changes in the total OPEB liability were as follows for the year ended September 30, 2020:

| | | |
|---|---|---|
| **Total OPEB Liability at October 1, 2019** | $ | 474,518 |
| **Changes for the Current Year** | | |
| Service cost | | 24,075 |
| Interest | | 16,602 |
| Difference between expected and actual experience | | (3,180) |
| Changes in assumptions | | 88,007 |
| Benefit payments | | (21,563) |
| Net Changes | | 103,941 |
| **Balances at September 30, 2020** | $ | 578,459 |

## NOTE 10. POSTEMPLOYMENT BENEFITS OTHER THAN PENSIONS (Continued)

### Changes in the Total OPEB Liability (Continued)

Sensitivity of the Total OPEB Liability to Changes in the Discount Rate: The following table presents the total OPEB liability of the Village calculated using the current discount rate of 2.14%, as well as what the total OPEB liability would be if it were calculated using a discount rate that is one percentage point lower (1.14%) or one percentage point higher (3.14%) than the current rate:

| 1.0% Decrease (1.14%) | Current Discount Rate (2.14%) | 1.0% Increase (3.14%) |
|---|---|---|
| $ 639,574 | $ 578,459 | $ 517,343 |

Sensitivity of the Total OPEB Liability to Changes in the Healthcare Cost Trend Rate: The following table presents the total OPEB liability of the Village calculated using the current healthcare cost trend rate of 8.0%, as well as what the total OPEB liability would be if it were calculated using a healthcare cost trend rate that is one percentage point lower (7%) or one percentage point higher (9%) than the current rate:

| 1.0% Decrease (7.0%) | Current Discount Rate (8.0%) | 1.0% Increase (9.0%) |
|---|---|---|
| $ 500,320 | $ 578,459 | $ 672,267 |

Changes in Actuarial Assumptions: The discount rate decreased from 3.64% for 2019 to 2.14% for 2020.

### OPEB Expense and Deferred Inflows/Outflows of Resources Related to OPEB

For the year ended September 30, 2020, the Village recognized OPEB expense of $25,639. At September 30, 2020, the Village reported deferred inflows/outflows of resources related to OPEB from the following sources:

| | Deferred Outflows | Deferred Inflows |
|---|---|---|
| Differences between expected and actual experience | $ 1,807 | $ 2,935 |
| Changes in assumptions | 81,237 | - |
| **Balances at September 30, 2020** | **$ 83,044** | **$ 2,935** |

The amounts reported as deferred inflows/outflows of resources related to OPEB will be recognized in OPEB expense as follows:

## NOTE 10. POSTEMPLOYMENT BENEFITS OTHER THAN PENSIONS (Continued)

### OPEB Expense and Deferred Inflows/Outflows of Resources Related to OPEB (Continued)

| Year Ending September 30, | Amount |
|---|---|
| 2021 | $ 6,676 |
| 2022 | 6,676 |
| 2023 | 6,676 |
| 2024 | 6,676 |
| 2025 | 6,676 |
| Thereafter | 46,729 |

## NOTE 11. COMMITMENTS AND CONTINGENCIES

### Grants

Amounts received or receivable from grantor agencies are subject to audit and adjustment by those agencies. Any disallowed claims, including amounts already received, might constitute a liability of the Village for the return of those funds.

### Contingencies

The Village is subject to a variety of lawsuits occurring in the normal course of business, the ultimate outcome of which is not presently determinable. In the opinion of management, after consultation with legal counsel, the resolution of any pending matters is not expected to have a significant impact on the financial condition of the Village.

### Coronavirus Pandemic

During March 2020, a global pandemic was declared by the World Health Organization related to the rapidly growing outbreak of the coronavirus (COVID-19). The pandemic significantly affected economic conditions in the U.S. as federal, state and local governments reacted to the public health crisis by ordering the temporary closures of schools, public facilities and non-essential businesses and organizations, and imposing travel restrictions. To date, certain revenues of the Village, such as sales taxes, gas taxes and recreation program fees, have been negatively impacted by the decline in economic activity, although the Village has made corresponding budget adjustments. The duration of the business and economic disruptions, and the long-term impact on the Village's revenues and services cannot presently be determined. It is at least reasonably possible that the effects of the pandemic on the Village could be material in future periods.

## NOTE 11. COMMITMENTS AND CONTINGENCIES (Continued)

### Contract Commitments

Construction contracts consisted of the following at September 30, 2020:

| | Total Project Authorization | Expended through September 30, 2020 | Contract Retainage Payable at September 30, 2020 | Balance to Complete |
|---|---|---|---|---|
| **Governmental Activities** | | | | |
| Task #252 - RPP Fishing Dock | $ 22,025 | $ 18,043 | $ - | $ 3,982 |
| Task #255 - Pathway Park Phase I-III | 794,739 | 440,814 | 16,416 | 337,509 |
| Task #261 - Storage Bldg - Maintenance | 43,737 | 21,794 | - | 21,943 |
| Task #269 - Police 2nd Story Building | 34,450 | 30,900 | - | 3,550 |
| Task #281 - RPP Playground Improvements | 64,476 | 55,248 | - | 9,228 |
| Task #283 - Ballfield Renovations | 513,195 | 490,695 | - | 22,500 |
| **Total Governmental Activities** | **$ 1,472,622** | **$ 1,057,494** | **$ 16,416** | **$ 398,712** |
| **Water and Sewer Fund** | | | | |
| Task #218 - L/S Rehabilitation | $ 1,150,828 | $ 76,190 | $ 2,028 | $ 1,072,610 |
| Task #226 - SCADA Pratt WTP | 93,966 | 63,485 | - | 30,481 |
| Task #227 - SCADA Main WTP | 93,966 | 63,485 | - | 30,481 |
| Task #233 - L/S Rehabilitation | 116,954 | 63,874 | - | 53,080 |
| Task #234 - Prairie W&WW Line | 43,222 | 31,364 | - | 11,858 |
| Task #238 - MIEX Regen Pratt WTP | 248,899 | 116,713 | - | 132,186 |
| Task #240 - Vacuum Station #1 | 33,935 | 22,185 | - | 11,750 |
| Task #242 - Water Well #10 | 119,135 | 45,477 | - | 73,658 |
| Task #247 - Utility Relocation Kudza Task | 209,467 | 30,585 | - | 178,882 |
| Task #258 - Material Storage Bays | 11,690 | 10,190 | - | 1,500 |
| Task #260 - Material Storage Covering | 38,648 | 22,598 | - | 16,050 |
| Task #262 - Well #9 Replacement | 114,860 | 5,260 | - | 109,600 |
| Task #264 - Well #15 Generator Repair | 21,875 | 12,518 | - | 9,357 |
| Task #265 - Well #11 Generator Repair | 21,200 | 11,843 | - | 9,357 |
| Task #266 - Vac St #1 Generator Repair | 24,685 | 13,500 | - | 11,185 |
| Task #267 – L/S #9 Generator Repair | 21,300 | 11,943 | - | 9,357 |
| Task #268 - MIEX Regen Sys Upgrade | 234,688 | 107,897 | 1,199 | 125,592 |
| Task #271 - Sand Loader Replacement | 35,759 | 17,454 | - | 18,305 |
| Task #272 - Advanced Metering | 212,140 | 81,345 | - | 130,795 |
| Task #275 - Disinfect Feed Impr Main WTP | 14,785 | 5,410 | - | 9,375 |
| Task #276 - Disinfect Feed Impr Pratt WTP | 14,785 | - | - | 14,785 |
| Task #278 - Vac St #1 Vac Pump Replace | 17,592 | 10,433 | - | 7,159 |
| Task #284 - SCADA Sewer Lift Stations | 156,407 | 45,777 | - | 110,630 |
| **Stormwater Fund** | | | | |
| Task #249 - Lakewood Road SW Imp | 23,098 | 15,187 | - | 7,911 |
| Task #250 - Carol & Rex Ave SW Imp | 69,730 | 56,630 | - | 13,100 |
| **Total Business-type Activities** | **$ 3,143,614** | **$ 941,343** | **$ 3,227** | **$ 2,199,044** |

# REQUIRED SUPPLEMENTARY INFORMATION

## VILLAGE OF PALM SPRINGS, FLORIDA

*Budgetary Comparison Schedule*
*General Fund*
*Year Ended September 30, 2020*

| | Budgeted Amounts | | | Variance with Final Budget Positive (Negative) |
|---|---|---|---|---|
| | Original | Final | Actual | |
| **Revenues** | | | | |
| **Taxes:** | | | | |
| Ad valorem taxes | $ 4,455,381 | $ 4,455,381 | $ 4,472,085 | $ 16,704 |
| Franchise fees | 1,530,000 | 1,530,000 | 1,505,749 | (24,251) |
| Utility service taxes | 2,766,375 | 2,766,375 | 2,790,188 | 23,813 |
| Business taxes | 402,000 | 402,000 | 394,669 | (7,331) |
| **Total taxes** | **9,153,756** | **9,153,756** | **9,162,691** | **8,935** |
| **Permits:** | | | | |
| Building permits | 1,250,000 | 1,250,000 | 605,912 | (644,088) |
| Other permits | 9,200 | 9,200 | 11,102 | 1,902 |
| **Total permits** | **1,259,200** | **1,259,200** | **617,014** | **(642,186)** |
| **Intergovernmental:** | | | | |
| State revenue sharing | 956,330 | 956,330 | 851,029 | (105,301) |
| Alcoholic beverage licenses | 13,000 | 13,000 | 8,653 | (4,347) |
| Municipal fuel tax refund | 8,800 | 8,800 | 10,523 | 1,723 |
| Local option gas tax | 445,010 | 445,010 | 393,455 | (51,555) |
| County occupational licenses | 50,000 | 50,000 | 52,725 | 2,725 |
| Half-cent sales tax | 1,928,110 | 1,928,110 | 1,760,412 | (167,698) |
| Local option sales tax | 1,709,896 | 1,709,896 | 1,619,676 | (90,220) |
| Grant revenue | 1,213,197 | 1,213,197 | 1,094,174 | (119,023) |
| Other intergovernmental revenue | 235,408 | 235,408 | 127,517 | (107,891) |
| **Total intergovernmental** | **6,559,751** | **6,559,751** | **5,918,164** | **(641,587)** |
| **Charges for services:** | | | | |
| General government | 650,995 | 650,995 | 724,024 | 73,029 |
| Public safety | 382,160 | 382,160 | 185,363 | (196,797) |
| Physical environment | 1,132,031 | 1,132,031 | 1,147,017 | 14,986 |
| Transportation | 7,200 | 7,200 | 11,750 | 4,550 |
| Culture/recreation | 245,685 | 245,685 | 74,653 | (171,032) |
| **Total charges for services** | **2,418,071** | **2,418,071** | **2,142,807** | **(275,264)** |
| **Fines and forfeitures:** | | | | |
| Judgements and fines | 76,000 | 76,000 | 73,420 | (2,580) |
| Other | 239,500 | 239,500 | 96,788 | (142,712) |
| **Total fines and forfeitures** | **315,500** | **315,500** | **170,208** | **(145,292)** |
| **Contributions and donations** | **25,000** | **25,000** | **20,602** | **(4,398)** |

*Continued*

## VILLAGE OF PALM SPRINGS, FLORIDA

*Budgetary Comparison Schedule*
*General Fund (Continued)*
*Year Ended September 30, 2020*

| | Budgeted Amounts | | | Variance with Final Budget Positive (Negative) |
|---|---|---|---|---|
| | Original | Final | Actual | |
| **Miscellaneous:** | | | | |
| Investment income | $ 220,000 | $ 220,000 | $ 110,534 | $ (109,466) |
| Facility rental | 274,100 | 274,100 | 260,495 | (13,605) |
| Miscellaneous revenue | 12,300 | 12,300 | 164,059 | 151,759 |
| **Total miscellaneous** | **506,400** | **506,400** | **535,088** | **28,688** |
| **Total revenues** | **20,237,678** | **20,237,678** | **18,566,574** | **(1,671,104)** |
| **Other financing sources** | | | | |
| Transfer in | 2,490,099 | 2,490,099 | 2,490,099 | - |
| Subsequent year appropriation | 2,375,050 | 2,375,050 | - | (2,375,050) |
| Appropriated from restricted for sales tax | 3,244,211 | 3,244,211 | - | (3,244,211) |
| **Total revenues and other financing sources** | **$ 28,347,038** | **$ 28,347,038** | **$ 21,056,673** | **$ (7,290,365)** |
| **Expenditures** | | | | |
| **General government:** | | | | |
| Legislative: | | | | |
| Personal services | $ 51,974 | $ 51,974 | $ 51,894 | $ 80 |
| Operating | 86,467 | 96,909 | 92,510 | 4,399 |
| Capital outlay | 10,000 | 10,000 | 9,432 | 568 |
| Nonoperating | 333,505 | 238,063 | 6,000 | 232,063 |
| Total legislative | 481,946 | 396,946 | 159,836 | 237,110 |
| Executive: | | | | |
| Personal services | 881,217 | 881,067 | 742,887 | 138,180 |
| Operating | 76,463 | 74,398 | 70,083 | 4,315 |
| Capital outlay | 3,800 | 6,015 | 6,003 | 12 |
| Total executive | 961,480 | 961,480 | 818,973 | 142,507 |
| Financial administration: | | | | |
| Personal services | 629,465 | 629,465 | 621,061 | 8,404 |
| Operating | 29,733 | 29,283 | 16,038 | 13,245 |
| Capital outlay | 3,800 | 4,250 | 4,222 | 28 |
| Total financial administration | 662,998 | 662,998 | 641,321 | 21,677 |
| Legal: | | | | |
| Operating | 220,000 | 220,000 | 189,150 | 30,850 |
| Information technology: | | | | |
| Personal services | 426,723 | 426,723 | 358,575 | 68,148 |
| Operating | 240,566 | 262,541 | 255,089 | 7,452 |
| Capital outlay | 248,700 | 226,725 | 84,547 | 142,178 |
| Total information technology | 915,989 | 915,989 | 698,211 | 217,778 |
| Other general government: | | | | |
| Personal services | 2,500 | 9,075 | 8,653 | 422 |
| Operating | 227,950 | 221,375 | 180,718 | 40,657 |
| Total other general government | 230,450 | 230,450 | 189,371 | 41,079 |
| **Total general government** | **3,472,863** | **3,387,863** | **2,696,862** | **691,001** |

*Continued*

## VILLAGE OF PALM SPRINGS, FLORIDA

*Budgetary Comparison Schedule*
*General Fund (Continued)*
*Year Ended September 30, 2020*

| | Budgeted Amounts | | | Variance with Final Budget Positive (Negative) |
|---|---|---|---|---|
| | Original | Final | Actual | |
| **Public safety:** | | | | |
| Planning, zoning and building: | | | | |
| Personal services | $ 886,335 | $ 887,418 | $ 618,556 | $ 268,862 |
| Operating | 443,495 | 442,412 | 222,979 | 219,433 |
| Capital outlay | 141,700 | 141,700 | 5,206 | 136,494 |
| Nonoperating | 100,000 | 100,000 | 48,954 | 51,046 |
| Total planning, zoning and building | 1,571,530 | 1,571,530 | 895,695 | 675,835 |
| Law enforcement: | | | | |
| Personal services | 8,863,904 | 8,863,904 | 7,529,090 | 1,334,814 |
| Operating | 655,562 | 643,546 | 562,320 | 81,226 |
| Capital outlay | 2,337,700 | 2,342,600 | 833,212 | 1,509,388 |
| Nonoperating | 3,300 | 10,416 | 10,416 | - |
| Total law enforcement | 11,860,466 | 11,860,466 | 8,935,038 | 2,925,428 |
| **Total public safety** | **13,431,996** | **13,431,996** | **9,830,733** | **3,601,263** |
| **Physical environment:** | | | | |
| Sanitation services: | | | | |
| Operating | 1,093,885 | 1,178,885 | 1,173,626 | 5,259 |
| Total sanitation services | 1,093,885 | 1,178,885 | 1,173,626 | 5,259 |
| **Total physical environment** | **1,093,885** | **1,178,885** | **1,173,626** | **5,259** |
| **Transportation:** | | | | |
| Personal services | 1,426,332 | 1,426,332 | 1,358,566 | 67,766 |
| Operating | 929,862 | 929,862 | 696,831 | 233,031 |
| Capital outlay | 1,322,100 | 1,322,100 | 599,639 | 722,461 |
| **Total transportation** | **3,678,294** | **3,678,294** | **2,655,036** | **1,023,258** |
| **Culture/recreation:** | | | | |
| Library: | | | | |
| Personal services | 678,716 | 679,219 | 575,331 | 103,888 |
| Operating | 113,797 | 115,896 | 103,327 | 12,569 |
| Capital outlay | 261,630 | 259,028 | 130,978 | 128,050 |
| Total library | 1,054,143 | 1,054,143 | 809,636 | 244,507 |
| Parks and recreation: | | | | |
| Personal services | 647,632 | 647,632 | 498,269 | 149,363 |
| Operating | 463,950 | 448,950 | 256,088 | 192,862 |
| Capital outlay | 4,427,800 | 4,442,800 | 1,811,482 | 2,631,318 |
| Total parks and recreation | 5,539,382 | 5,539,382 | 2,565,839 | 2,973,543 |

*Continued*

## VILLAGE OF PALM SPRINGS, FLORIDA

*Budgetary Comparison Schedule*
*General Fund (Continued)*
*Year Ended September 30, 2020*

| | Budgeted Amounts | | | Variance with Final Budget Positive (Negative) |
|---|---|---|---|---|
| | Original | Final | Actual | |
| Special events: | | | | |
| Operating | $ 76,475 | $ 76,475 | $ 60,474 | $ 16,001 |
| Total special events | 76,475 | 76,475 | 60,474 | 16,001 |
| **Total culture/recreation** | **6,670,000** | **6,670,000** | **3,435,949** | **3,234,051** |
| **Total expenditures** | **$ 28,347,038** | **$ 28,347,038** | **19,792,206** | **$ 8,554,832** |
| Net change in fund balance | | | 1,264,467 | |
| Fund balance, beginning of year | | | 16,756,633 | |
| **Fund balance, end of year** | | | $ **18,021,100** | |

# VILLAGE OF PALM SPRINGS, FLORIDA

NOTES TO BUDGETARY COMPARISON SCHEDULE

SEPTEMBER 30, 2020

## NOTE 1. BUDGETARY ACCOUNTING

State of Florida Statutes require that all municipal governments establish budgetary systems and approve annual operating budgets. The Council annually adopts an operating budget and appropriates funds for the General Fund. The procedures for establishing the budget are as follows:

- Prior to September 1, the Village Manager submits to the Council a proposed operating budget prepared for the fiscal year commencing the following October 1. The operating budget includes proposed expenditures and the means of financing them.
- Public hearings are conducted to obtain taxpayer comments.
- The Village advises the County Property Appraiser of the proposed millage rate and the date, time and place of the public hearing for budget acceptance.
- The budget and related millage rate are legally enacted by ordinance.
- Changes or amendments to the budget of the Village or a department must be approved by the Council; however, changes within a department which do not affect the total departmental expenditures may be approved at the administrative level. Accordingly, the legal level of control is at the department level.

The adopted budgets are prepared on the modified accrual basis in accordance with U.S. generally accepted accounting principles. The reported budgetary data represents the final appropriated budget after amendments adopted by the Council. There were no supplemental appropriations adopted for the year ended September 30, 2020. Unexpended appropriations lapse at year end.

## NOTE 2. ENCUMBRANCES

Encumbrance accounting, in which purchase orders, contracts and other commitments for the expenditure of monies are recorded in order to reserve that portion of the applicable appropriation, is utilized by the Village during the year. However, all encumbrances outstanding at year end lapse and, accordingly, there is no fund balance assigned for encumbrances at September 30, 2020.

## NOTE 3. BUDGET AND ACTUAL COMPARISON

The budgetary comparison schedule is prepared on the basis of accounting used in preparing the appropriated budget. For budgetary purposes, proceeds from the sale of capital assets are included in budgeted revenues, but are considered “other financing sources” for GAAP. As a result, the General Fund revenues reported in the budgetary comparison schedule are $58,947 more than the revenues reported on the basis of GAAP due to $58,947 of proceeds from the sale of capital assets reported as an other financing source under GAAP.

# VILLAGE OF PALM SPRINGS, FLORIDA

## CONDITION RATING OF THE VILLAGE'S STREET SYSTEM

## SEPTEMBER 30, 2020

Percentage of lane miles in good or better condition: 100%

Percentage of lane miles in substandard condition: 0%

Comparison of needed-to-actual maintenance/preservation:

| | Needed | Actual | Difference |
|---|---|---|---|
| 2011 | $ 125,000 | $ 110,127 | $ 14,873 |
| 2012 | 42,950 | 25,029 | 17,921 |
| 2013 | 124,000 | 122,145 | 1,855 |
| 2014 | 144,805 | 141,553 | 3,252 |
| 2015 | 170,000 | 151,463 | 18,537 |
| 2016 | 540,500 | 523,022 | 17,478 |
| 2017 | 845,822 | 611,980 | 233,842 |
| 2018 | 370,000 | 99,409 | 270,591 |
| 2019 | 474,600 | 308,997 | 165,603 |
| 2020 | 425,000 | 257,990 | 167,010 |
| **Total** | **$ 3,262,677** | **$ 2,351,715** | **$ 910,962** |

The condition of street pavement is rated using the Asphalt Pavement Rating Form as developed by the Asphalt Institute. The Asphalt Pavement Rating Form is based on a weighted average of thirteen defects found in pavement services. The form uses a measurement scale that is based on a condition index rating from zero for failed pavement to l00 for pavement in perfect condition. The condition index is used to classify roads in seven categories: excellent (100-85), very good (84-70), good (69-55), fair (54-40), poor (39-25), very poor (24-10), and failed (9-0). It is the Village's policy to maintain at least 80% of its street system at a good or better condition. Needed maintenance is calculated based upon inspections and the condition assessment index.

In accordance with GASB Statement No. 34, the Village was required to report at least one complete condition assessment at transition using the modified approach. The condition assessment was completed by the Village in 2003 and documented that eligible infrastructure assets are being preserved at or above the condition level established by the Village. The Village evaluates 1/3 of the network each year. In FY 2020, the Village is in year 2 of the sixth cycle of assessments. The assessments continue to indicate that the Village has maintained the network in accordance with Village policy.

The Village calculates needed maintenance of its street system annually. However, the scheduling of these street projects often crosses fiscal years. Also, many streets are restored as utility work is performed. Therefore, actual maintenance may be less than or greater than the calculated needed maintenance in any fiscal year.

## VILLAGE OF PALM SPRINGS, FLORIDA

*Required Supplementary Information*
*Schedule of Changes in the Net Pension Liability (Asset) and Related Ratios - General Employees Pension Fund*
*Last Seven Fiscal Years*

| | Measurement Date September 30, 2020 | Measurement Date September 30, 2019 |
|---|---|---|
| **Total Pension Liability** | | |
| Service cost | $ 357,165 | $ 379,392 |
| Interest | 1,794,730 | 1,776,251 |
| Differences between expected and actual experience | (877,264) | (561,920) |
| Changes of assumptions | (745,073) | 913,998 |
| Benefit payments, including refunds | (1,097,195) | (1,106,461) |
| **Net change in total pension liability** | **(567,637)** | **1,401,260** |
| Total pension liability, beginning of fiscal year | 28,902,543 | 27,501,283 |
| **Total pension liability, end of fiscal year (a)** | **$ 28,334,906** | **$ 28,902,543** |
| **Plan Fiduciary Net Position** | | |
| Contributions | | |
| Employer | $ 933,633 | $ 831,216 |
| Plan members | 55,317 | 53,804 |
| Net investment income (loss) | 2,189,116 | 808,285 |
| Benefit payments, including refunds | (1,097,195) | (1,106,461) |
| Administrative expense | (74,305) | (62,854) |
| **Net change in plan fiduciary net position** | **2,006,566** | **523,990** |
| Plan fiduciary net position, beginning of fiscal year | 27,075,734 | 26,551,744 |
| **Plan fiduciary net position, end of fiscal year (b)** | **$ 29,082,300** | **$ 27,075,734** |
| **Net Pension Liability (Asset), end of fiscal year [(a)-(b)]** | **$ (747,394)** | **$ 1,826,809** |
| **Plan Fiduciary Net Position as a Percentage of Total Pension Liability (Asset)** | **102.6%** | **93.7%** |
| **Covered Payroll** | **$ 1,843,880** | **$ 1,793,426** |
| **Net Pension Liability (Asset) as a Percentage of Covered Payroll** | **(40.5)%** | **101.9%** |

**Notes to Schedule:**

Effective June 30, 2010, the General Employees Pension Plan was closed to new members and current employees were given the option to remain in the Plan or join the Florida Retirement System (FRS). A total of 38 active participants of the General Employees Pension Plan elected to join FRS and the remaining participants stayed in the Village plan. New employees hired after June 30, 2010 are required to join FRS.

Information prior to adoption of GASB Statement No. 67 in fiscal year 2014 is not available.

| Measurement Date September 30, | | | | |
|---|---|---|---|---|
| **2018** | **2017** | **2016** | **2015** | **2014** |
| $ 371,772 | $ 364,562 | $ 339,321 | $ 366,097 | $ 366,898 |
| 1,728,787 | 1,685,440 | 1,583,402 | 1,572,611 | 1,487,114 |
| (205,918) | (325,072) | (429,411) | (930,661) | (498,125) |
| 866,043 | 777,414 | 2,358,552 | - | 1,199,760 |
| (1,004,991) | (950,966) | (877,324) | (811,678) | (708,034) |
| **1,755,693** | **1,551,378** | **2,974,540** | **196,369** | **1,847,613** |
| 25,745,590 | 24,194,212 | 21,219,672 | 21,023,303 | 19,175,690 |
| **$ 27,501,283** | **$ 25,745,590** | **$ 24,194,212** | **$ 21,219,672** | **$ 21,023,303** |
| | | | | |
| $ 862,047 | $ 828,922 | $ 1,088,264 | $ 1,061,229 | $ 1,158,775 |
| 59,854 | 64,047 | 72,094 | 80,731 | 86,400 |
| 2,291,631 | 2,674,644 | 2,139,230 | (110,389) | 1,485,554 |
| (1,004,991) | (950,966) | (877,324) | (811,678) | (708,034) |
| (63,308) | (63,858) | (66,848) | (58,933) | (54,383) |
| **2,145,233** | **2,552,789** | **2,355,416** | **160,960** | **1,968,312** |
| 24,406,511 | 21,853,722 | 19,498,306 | 19,337,346 | 17,369,034 |
| **$ 26,551,744** | **$ 24,406,511** | **$ 21,853,722** | **$ 19,498,306** | **$ 19,337,346** |
| | | | | |
| **$ 949,539** | **$ 1,339,079** | **$ 2,340,490** | **$ 1,721,366** | **$ 1,685,957** |
| | | | | |
| **96.5%** | **94.8%** | **90.3%** | **91.9%** | **92.0%** |
| | | | | |
| **$ 1,995,144** | **$ 2,134,889** | **$ 2,403,161** | **$ 2,691,095** | **$ 2,880,000** |
| | | | | |
| **47.6%** | **62.7%** | **97.4%** | **64.0%** | **58.5%** |

## VILLAGE OF PALM SPRINGS, FLORIDA

*Required Supplementary Information*
*Schedule of Changes in the Net Pension Liability (Asset) and Related Ratios - Police Officers Pension Fund*
*Last Seven Fiscal Years*

| | Measurement Date September 30, 2020 | Measurement Date September 30, 2019 |
|---|---|---|
| **Total Pension Liability** | | |
| Service cost | $ 332,692 | $ 339,484 |
| Interest | 2,313,118 | 2,205,109 |
| Differences between expected and actual experience | 852,542 | (264,614) |
| Changes of assumptions | (709,083) | 197,669 |
| Benefit payments, including refunds | (1,009,708) | (1,020,976) |
| **Net change in total pension liability** | **1,779,561** | **1,456,672** |
| Total pension liability, beginning of fiscal year | 32,321,724 | 30,865,052 |
| **Total pension liability, end of fiscal year (a)** | **$ 34,101,285** | **$ 32,321,724** |
| **Plan Fiduciary Net Position** | | |
| Contributions | | |
| Employer and State | $ 945,003 | $ 1,576,472 |
| Plan members | 109,215 | 106,132 |
| Net investment income (loss) | 3,269,990 | 1,498,097 |
| Benefit payments, including refunds | (1,009,708) | (1,020,976) |
| Administrative expense | (76,382) | (61,655) |
| **Net change in plan fiduciary net position** | **3,238,118** | **2,098,070** |
| Plan fiduciary net position, beginning of fiscal year | 31,978,903 | 29,880,834 |
| **Plan fiduciary net position, end of fiscal year (b)** | **$ 35,217,021** | **$ 31,978,904** |
| **Net Pension Liability (Asset), end of fiscal year [(a)-(b)]** | **$ (1,115,736)** | **$ 342,820** |
| **Plan Fiduciary Net Position as a Percentage of Total Pension Liability (Asset)** | **103.3%** | **98.9%** |
| **Covered Payroll** | **$ 1,878,665** | **$ 1,608,072** |
| **Net Pension Liability (Asset) as a Percentage of Covered Payroll** | **(59.4)%** | **21.3%** |

**Notes to Schedule:**

Effective October 1, 2009, the Village contracted with Palm Beach County for fire protection and emergency medical services. As a result, the existing Hazardous Employees Pension Plan was renamed the Police Officers Pension Plan and was closed to new Firefighter members and the benefits of current Firefighter members were frozen. Effective June 30, 2010, the Police Officers Pension Plan was closed to new members and current employees were given the option to remain in the Plan or join the Florida Retirement System (FRS). Nine police officers elected to join FRS on July 1, 2010 and the remaining participants stayed in the Village plan. New police officers hired after June 30, 2010 are required to join FRS.

Information prior to adoption of GASB Statement No. 67 in fiscal year 2014 is not available.

| | Measurement Date September 30, | | | | |
|---|---|---|---|---|---|
| | **2018** | **2017** | **2016** | **2015** | **2014** |
| | $ 403,228 | $ 427,032 | $ 410,669 | $ 360,751 | $ 375,327 |
| | 2,143,645 | 2,068,372 | 1,944,254 | 1,850,070 | 1,763,202 |
| | (279,697) | 216,592 | (181,834) | 81,981 | 391,759 |
| | 124,812 | 80,318 | 76,322 | - | - |
| | (965,601) | (938,666) | (888,548) | (878,850) | (1,443,990) |
| | **1,426,387** | **1,853,648** | **1,360,863** | **1,413,952** | **1,086,298** |
| | 28,024,713 | 26,171,065 | 24,810,202 | 24,810,202 | 23,723,904 |
| | **$ 29,451,100** | **$ 28,024,713** | **$ 26,171,065** | **$ 26,224,154** | **$ 24,810,202** |
| | $ 1,552,848 | $ 1,543,986 | $ 1,540,740 | $ 1,499,908 | $ 1,424,890 |
| | 103,813 | 116,150 | 123,992 | 117,695 | 122,123 |
| | 2,590,957 | 2,948,909 | 1,951,061 | (33,224) | 1,966,660 |
| | (965,601) | (938,666) | (888,548) | (878,850) | (1,443,990) |
| | (74,187) | (65,525) | (75,264) | (59,585) | (50,689) |
| | **3,207,830** | **3,604,854** | **2,651,981** | **645,944** | **2,018,994** |
| | 26,027,060 | 22,422,206 | 19,770,225 | 19,770,225 | 17,751,231 |
| | **$ 29,234,890** | **$ 26,027,060** | **$ 22,422,206** | **$ 20,416,169** | **$ 19,770,225** |
| | **$ 216,210** | **$ 1,997,653** | **$ 3,748,859** | **$ 5,807,985** | **$ 5,039,977** |
| | **99.3%** | **92.9%** | **85.7%** | **77.9%** | **79.7%** |
| | **$ 1,572,925** | **$ 1,759,837** | **$ 1,878,665** | **$ 1,783,252** | **$ 1,783,252** |
| | **13.7%** | **113.5%** | **199.5%** | **325.7%** | **282.6%** |

## VILLAGE OF PALM SPRINGS, FLORIDA

*Required Supplementary Information*
*Schedule of Village Contributions - Pension Trust Funds*
*Last Ten Fiscal Years*

| | Fiscal Year Ended September 30, | | | |
|---|---|---|---|---|
| | **2020** | **2019** | **2018** | **2017** |
| **General Employees Pension Fund** | | | | |
| Actuarially determined contribution | $ 887,452 | $ 809,354 | $ 801,394 | $ 777,969 |
| Contributions in relation to actuarially determined contribution | 933,633 | 831,216 | 862,047 | 828,922 |
| Contribution deficiency (excess) | $ (46,181) | $ (21,862) | $ (60,653) | $ (50,953) |
| Covered payroll | $ 1,843,880 | $ 1,793,426 | $ 1,995,144 | $ 2,134,889 |
| Contributions as a percentage of covered payroll | 50.6% | 46.3% | 43.2% | 38.8% |
| **Police Officers Pension Fund** | | | | |
| Actuarially determined contribution | $ 758,756 | $ 1,029,719 | $ 1,235,835 | $ 1,284,202 |
| Contributions in relation to actuarially determined contribution | 945,003 | 1,576,472 | 1,552,848 | 1,543,986 |
| Contribution deficiency (excess) | $ (186,247) | $ (546,753) | $ (317,013) | $ (259,784) |
| Covered payroll | $ 1,878,665 | $ 1,608,072 | $ 1,572,925 | $ 1,759,837 |
| Contributions as a percentage of covered payroll | 50.3% | 98.0% | 98.7% | 87.7% |

| **Notes to Schedule:** | **General Employees** | **Police Officers** |
|---|---|---|
| **Actuarial valuation date** | 10/1/2020 | 10/1/2020 |
| **Actuarial measurement date** | 9/30/2020 | 9/30/2020 |
| **Actuarial methods and assumptions used to determine contribution rates:** | | |
| Actuarial cost method | Entry Age Normal | Entry Age Normal |
| Amortization method | Level Dollar, Closed | Level Percent of Payroll, Closed |
| Amortization period: | | |
| Gains and losses | 5 years | 15 years |
| Assumption, method and plan changes | 5 years | 15 years |
| Asset valuation method | 5-Year Smoothed | 4-Year Smoothed |
| Inflation, per year | 2.00% | 2.75% |
| Salary increases (with inflation), per year | 4.6% - 8.3% | 4.0% - 5.25% |
| Investment rate of return (net of expenses, with inflation), per year | 6.25% | 6.75% |
| Cost of living adjustments | 3.0% | 3.0% |
| Retirement age | Age 62 with 5 years service | Experience-based rates specific to eligibility |
| Mortality | PUB-2010 Scale MP-2018 | PUB-2010 Scale MP-2018 |

**Actuarial Assumption Changes**

**General Employees** - In 2014, the discount rate was reduced from 7.75% to 7.5% and the RP-2000 Combined Mortality Table was adopted on a fully generational basis using Scale AA. In 2016, the discount rate was reduced from 7.5% to 7.0%. In 2017, the discount rate was reduced from 7.0% to 6.75%. In 2018, the discount rate was reduced from 6.75% to 6.50%. In 2019, the discount rate was reduced from 6.5% to 6.25% and the inflation rate was reduced from 2.5% to 2.0%.

**Police Officers** - In 2016, the discount rate was reduced from 7.5% to 7.45%. In 2017, the discount rate was reduced from 7.45% to 7.40%. In 2018 the discount rate was reduced from 7.4 % to 7.35%. In 2019 the discount rate was reduced from 7.35 % to 7.25%. In 2020 the discount rate was reduced from 7.25 % to 6.75% and the initial amortization period for assumption, method and plan changes was reduced from 20 years to 15 years.

| | Fiscal Year Ended September 30, | | | | | |
|---|---|---|---|---|---|---|
| | 2016 | 2015 | 2014 | 2013 | 2012 | 2011 |
| | $ 948,927 | $ 963,970 | $ 1,017,458 | $ 978,877 | $ 875,999 | $ 718,424 |
| | 1,088,264 | 1,061,229 | 1,158,775 | 1,027,980 | 939,845 | 763,780 |
| | $ (139,337) | $ (97,259) | $ (141,317) | $ (49,103) | $ (63,846) | $ (45,356) |
| | $ 2,403,161 | $ 2,691,095 | $ 2,880,000 | $ 3,085,966 | $ 3,074,143 | $ 3,150,980 |
| | 45.3% | 39.4% | 40.2% | 33.3% | 30.6% | 24.2% |
| | $ 1,341,587 | $ 1,455,934 | $ 1,421,664 | $ 1,343,382 | $ 1,194,290 | $ 1,008,995 |
| | 1,540,740 | 1,499,908 | 1,424,890 | 1,343,382 | 1,194,290 | 1,008,995 |
| | $ (199,153) | $ (43,974) | $ (3,226) | $ - | $ - | $ - |
| | $ 1,878,665 | $ 1,783,252 | $ 1,868,460 | $ 1,666,560 | $ 1,850,308 | $ 1,734,067 |
| | 82.0% | 84.1% | 76.3% | 80.6% | 64.5% | 58.2% |

**Notes to Schedule (Continued):**

**Actuarial Assumption Changes - Police Officers Pension Fund**

In 2012, inflation was updated to 3.5%, salary increases were updated to 4.5% to 7.5% depending on age (including inflation) and the net rate of return was updated to 7.5%, compounded annually net of investment expense. In 2017 inflation was updated from 3.5% to 2.75% and salary increases updated from 4.5% - 7.5% to 4.0% - 5.25%.

## VILLAGE OF PALM SPRINGS, FLORIDA

*Required Supplementary Information*
*Schedule of the Village's Proportionate Share of the Net Pension Liability - Florida Retirement System (FRS) Pension Plan*
*Last Seven Fiscal Years*

| | Measurement Date June 30, 2020 | Measurement Date June 30, 2019 |
|---|---|---|
| Village's proportion of the net pension liability | 0.023891640% | 0.025071694% |
| Village's proportionate share of the net pension liability | $ 10,354,989 | $ 8,634,342 |
| Village covered payroll | $ 7,506,842 | $ 7,035,255 |
| Village's proportionate share of the net pension liability as a percentage of Village covered payroll | 137.94% | 122.73% |
| Plan fiduciary net position as a percentage of the total pension liability | 78.8% | 82.6% |

**Notes to Schedule:**

| | |
|---|---|
| **Actuarial valuation date** | 7/1/2020 |
| **Actuarial measurement date** | 6/30/2020 |
| **Actuarial methods and assumptions used to determine contribution rates:** | |
| Discount rate - 2020 | 6.80% |
| Discount rate - 2019 | 6.90% |
| Discount rate - 2018 | 7.00% |
| Discount rate - 2017 | 7.10% |
| Discount rate - 2016 | 7.60% |
| Discount rate - 2014-2015 | 7.65% |
| Actuarial cost method | Individual Entry Age |
| Amortization method | Level Percent of Payroll, Closed |
| Amortization period: | |
| Gains and losses | 30 years |
| Assumption, method and plan changes | 30 years |
| Asset valuation method | Fair Market Value 5-year smoothed |
| Inflation, per year | 2.40% |
| Salary increases (with inflation), per year | 3.25% |
| Investment rate of return (net of expenses, with inflation), per year | 6.80% |
| Payroll growth | 3.25% |
| Cost of living adjustments | 3.0% pre-July 2011, 0% thereafter |
| Retirement age | Varies by tier and member class |
| Mortality | PUB-2010 Scale MP-2018 |

Information prior to adoption of GASB Statement No. 67 by FRS in fiscal year 2014 is not available.

| Measurement Date June 30, | | | | |
|---|---|---|---|---|
| 2018 | 2017 | 2016 | 2015 | 2014 |
| 0.023454989% | 0.023345965% | 0.022078733% | 0.018711284% | 0.016576782% |
| $ 7,064,764 | $ 6,905,580 | $ 5,574,897 | $ 2,416,813 | $ 1,011,427 |
| $ 6,322,362 | $ 6,039,789 | $ 5,488,748 | $ 4,800,805 | $ 4,411,337 |
| 111.74% | 114.33% | 101.57% | 50.34% | 22.93% |
| 84.3% | 83.9% | 84.9% | 92.0% | 96.1% |

## VILLAGE OF PALM SPRINGS, FLORIDA

*Required Supplementary Information*
*Schedule of the Village's Proportionate Share of the Net Pension Liability -*
*Florida Retiree Health Insurance Subsidy (HIS) Trust Fund*
*Last Seven Fiscal Years*

| | Measurement Date June 30, | |
|---|---|---|
| | **2020** | **2019** |
| Village's proportion of the net pension liability | 0.021684100% | 0.021032668% |
| Village's proportionate share of the net pension liability | $ 2,647,593 | $ 2,353,345 |
| Village covered payroll | $ 7,506,842 | $ 7,035,255 |
| Village's proportionate share of the net pension liability as a percentage of Village covered payroll | 35.27% | 33.45% |
| Plan fiduciary net position as a percentage of the total pension liability | 3.0% | 2.6% |

**Notes to Schedule:**

| | |
|---|---|
| **Actuarial valuation date** | 7/1/2020 |
| **Actuarial measurement date** | 6/30/2020 |
| **Actuarial methods and assumptions used to determine contribution rates:** | |
| Discount rate - 2020. | 2.21% |
| Discount rate - 2019 | 3.50% |
| Discount rate - 2018 | 3.87% |
| Discount rate - 2017 | 3.58% |
| Discount rate - 2016 | 2.85% |
| Discount rate - 2014-2015 | 3.80% |
| Actuarial cost method | Individual Entry Age |
| Amortization method | Level Percent of Payroll, Closed |
| Amortization period: | |
| Gains and losses | 30 years |
| Assumption, method and plan changes | 30 years |
| Asset valuation method | Fair Market Value |
| Inflation, per year | 2.40% |
| Salary increases (with inflation), per year | 3.25% |
| Investment rate of return (net of expenses, with inflation), per year | N/A |
| Payroll growth | 3.25% |
| Cost of living adjustments | N/A |
| Retirement age | N/A |
| Mortality | PUB-2010 Scale MP-2018 |

Information prior to adoption of GASB Statement No. 67 by FRS in fiscal year 2014 is not available.

| Measurement Date June 30, | | | | |
|---|---|---|---|---|
| 2018 | 2017 | 2016 | 2015 | 2014 |
| 0.019383990% | 0.019023794% | 0.017833547% | 0.015937384% | 0.014456936% |
| $ 2,051,623 | $ 2,034,112 | $ 2,078,426 | $ 1,625,362 | $ 1,351,759 |
| $ 6,322,362 | $ 6,039,789 | $ 5,488,748 | $ 6,039,789 | $ 4,411,337 |
| 32.45% | 33.68% | 37.87% | 26.91% | 30.64% |
| 2.1% | 1.6% | 1.0% | 0.5% | 1.0% |

## VILLAGE OF PALM SPRINGS, FLORIDA

*Required Supplementary Information*
*Schedule of Village Contributions - Florida Retirement System FRS and HIS Plans*
*Last Seven Fiscal Years*

| | Fiscal Year Ended September 30, | |
|---|---|---|
| **Florida Retirement System (FRS) Pension Plan** | **2020** | **2019** |
| Contractually required Village contribution | $ 800,120 | $ 799,161 |
| Contributions in relation to the contractually required Village contribution | 800,120 | 799,161 |
| Contribution deficiency (excess) | $ - | $ - |
| Village covered payroll | $ 7,525,485 | $ 7,248,956 |
| Contributions as a percentage of Village covered payroll | 10.6% | 11.0% |
| **Florida Retiree Health Insurance Subsidy (HIS) Trust Fund** | | |
| Contractually required Village contribution | $ 125,265 | $ 120,348 |
| Contributions in relation to the contractually required Village contribution | 125,265 | 120,348 |
| Contribution deficiency (excess) | $ - | $ - |
| Village covered payroll | $ 7,525,485 | $ 7,248,956 |
| Contributions as a percentage of Village covered payroll | 1.7% | 1.7% |

**Note to Schedule:**

Information prior to adoption of GASB Statement No. 67 by FRS in fiscal year 2014 is not available.

| | Fiscal Year Ended September 30, | | | | |
|---|---|---|---|---|---|
| | 2018 | 2017 | 2016 | 2015 | 2014 |
| | $ 682,850 | $ 617,847 | $ 568,454 | $ 474,857 | $ 363,102 |
| | 682,850 | 617,847 | 568,454 | 474,857 | 363,102 |
| | $ - | $ - | $ - | $ - | $ - |
| | $ 6,401,551 | $ 6,250,249 | $ 5,586,304 | $ 4,952,601 | $ 4,412,822 |
| | 10.7% | 9.9% | 10.2% | 9.6% | 8.2% |
| | $ 106,426 | $ 101,046 | $ 95,521 | $ 60,923 | $ 49,525 |
| | 106,426 | 101,046 | 95,521 | 60,923 | 49,525 |
| | $ - | $ - | $ - | $ - | $ - |
| | $ 6,401,551 | $ 6,250,249 | $ 5,586,304 | $ 4,952,601 | $ 4,412,822 |
| | 1.7% | 1.6% | 1.7% | 1.2% | 1.1% |

## VILLAGE OF PALM SPRINGS, FLORIDA

*Required Supplementary Information*
*Schedule of Investment Returns*
*Last Seven Fiscal Years*

| Fiscal Year Ended September 30, | Annual money-weighted rate of return, net of investment expenses: General Employees Pension Fund | Police Officers Pension Fund | Florida Retirement System (FRS) | Florida Retiree Health Insurance Subsidy (HIS) Trust Fund |
|---|---|---|---|---|
| 2020 | 5.86 % | 10.05 % | 3.35% | 0.00% |
| 2019 | 2.86 % | 4.84 % | 5.98% | 0.00% |
| 2018 | 9.18 % | 9.56 % | 9.28% | 0.00% |
| 2017 | 11.99 % | 12.51 % | 13.59% | 0.00% |
| 2016 | 10.53 % | 9.24 % | 0.57% | 0.00% |
| 2015 | (.87)% | (.47)% | 3.77% | 0.00% |
| 2014 | 8.25 % | 11.04 % | 17.57% | 0.00% |

**Note to Schedule:**

The money-weighted rate of return considers the changing amounts estimated as invested during a period and weights the amount of pension plan investments by the proportion of time they are available to earn a return during that period. Cash flows are estimated on a monthly basis and are assumed to occur at the beginning of each month. Cash inflows are netted with cash outflows, resulting in a net cash flow in each month. The money-weighted rate of return is calculated net of investment expenses.

Information prior to adoption of GASB Statement No. 67 in fiscal year 2014 is not available.

## VILLAGE OF PALM SPRINGS, FLORIDA

*Required Supplementary Information*
*Schedule of Changes in the Total OPEB Liability and Related Ratios*
*Last Three Fiscal Years*

| | Measurement Date September 30, | | |
|---|---|---|---|
| | **2020** | **2019** | **2018** |
| **Total OPEB Liability** | | | |
| Service cost | $ 24,075 | $ 25,178 | $ 23,702 |
| Interest | 16,602 | 16,054 | 15,113 |
| Differences between expected and actual experience | (3,180) | - | 2,109 |
| Changes of assumptions | 88,007 | - | - |
| Benefit payments | (21,563) | (15,519) | (14,609) |
| **Net change in total OPEB liability** | **103,941** | **25,713** | **26,315** |
| Total OPEB liability, beginning of fiscal year | 474,518 | 448,805 | 422,490 |
| **Total OPEB liability, end of fiscal year** | **$ 578,459** | **$ 474,518** | **448,805** |
| **Village Covered Employee Payroll** | **$ 10,382,123** | **$ 9,984,483** | **$ 9,399,015** |
| **Net OPEB Liability as a Percentage of Village Covered Employee Payroll** | **5.6%** | **4.8%** | **4.8%** |

**Notes to Schedule:**

Information prior to adoption of GASB Statement No. 75 in fiscal year 2018 is not available.

The plan is funded on a pay-as-you-go basis and is not administered as a formal qualifying trust. There were no plan assets as of the date of the most recent valuation. Since there are currently no invested plan assets held in trust to finance the OPEB liability, the discount rate is the long-term expected rate of return on tax-exempt, high quality municipal bonds based on the Standard & Poors Municipal Bond 20-year High Grade Rate Index.

| **Actuarial Assumption Changes** | |
|---|---|
| Discount rate - 2020 | 2.14% |
| Discount rate - 2019 and 2018 | 3.64% |

# COMBINING FUND FINANCIAL STATEMENTS AND DEBT SCHEDULES

## NONMAJOR GOVERNMENTAL FUNDS

**Special Revenue Fund –** Special revenue funds are used to account for specific revenues that are restricted to expenditure for particular purposes. The Village's only Special Revenue Fund is the Law Enforcement Fund.

*Law Enforcement Fund* – Accounts for proceeds from law enforcement forfeitures that are legally restricted to expenditures for law enforcement purposes.

**Debt Service Fund** – Debt service funds are used to account for assets held for the repayment of principal and interest on general obligation debt.

## VILLAGE OF PALM SPRINGS, FLORIDA

*Combining Balance Sheet*
*Nonmajor Governmental Funds*
*September 30, 2020*

| | Special Revenue Fund | | | |
|---|---|---|---|---|
| | Law Enforcement Fund | Debt Service Fund | Total Nonmajor Governmental Funds |
| **Assets** | | | |
| Cash and cash equivalents | $ 54,669 | $ 249,462 | $ 304,131 |
| **Total assets** | **$ 54,669** | **$ 249,462** | **$ 304,131** |
| **Fund balances** | | | |
| Restricted for: | | | |
| Law enforcement | $ 54,669 | $ - | $ 54,669 |
| Debt service | - | 249,462 | 249,462 |
| **Total fund balances** | **$ 54,669** | **$ 249,462** | **$ 304,131** |

## VILLAGE OF PALM SPRINGS, FLORIDA

*Combining Statement of Revenues, Expenditures and Changes in Fund Balances*
*Nonmajor Governmental Funds*
*Year Ended September 30, 2020*

| | Special Revenue Fund | | |
|---|---|---|---|
| | Law Enforcement Fund | Debt Service Fund | Total Nonmajor Governmental Funds |
| **Revenues** | | | |
| Taxes | $ - | $ 433,129 | $ 433,129 |
| **Total revenues** | **-** | **433,129** | **433,129** |
| **Expenditures** | | | |
| Debt service: | | | |
| Principal | - | 305,496 | 305,496 |
| Interest and other fiscal charges | - | 125,420 | 125,420 |
| **Total expenditures** | **-** | **430,916** | **430,916** |
| Excess of revenues over expenditures | - | 2,213 | 2,213 |
| Net change in fund balances | - | 2,213 | 2,213 |
| Fund balances, beginning of year | 54,669 | 247,249 | 301,918 |
| **Fund balances, end of year** | **$ 54,669** | **$ 249,462** | **$ 304,131** |

## FIDUCIARY FUNDS

**General Employees Pension Fund** – The general employees pension fund is used to account for the defined benefit pension plan for the general employees of the Village.

**Police Officers Pension Fund** – The police officers pension fund is used to account for the defined benefit pension plan for the police officers of the Village.

## VILLAGE OF PALM SPRINGS, FLORIDA

*Combining Statement of Fiduciary Net Position*
*Fiduciary Funds*
*September 30, 2020*

| | General Employees Pension Fund | Police Officers Pension Fund | Total Pension Funds |
|---|---|---|---|
| **Assets** | | | |
| Cash and cash equivalents | $ 1,273,633 | $ 556,596 | $ 1,830,229 |
| Receivables: | | | |
| Interest and dividends | 29,043 | 30,162 | 59,205 |
| Investments: | | | |
| U.S. Treasury securities | 673,401 | 431,752 | 1,105,153 |
| U.S. Government agencies | 3,014,768 | 2,950,071 | 5,964,839 |
| Mortgage and asset-backed securities | 206,698 | 325,423 | 532,121 |
| Domestic corporate bonds | 2,844,511 | 2,852,394 | 5,696,905 |
| International fixed income mutual fund | 1,009,728 | 1,292,999 | 2,302,727 |
| Domestic equity securities and mutual fund | 14,175,799 | 20,485,364 | 34,661,163 |
| Foreign equity securities and mutual fund | 3,291,255 | 3,352,495 | 6,643,750 |
| Real estate investment account | 2,588,973 | 2,960,988 | 5,549,961 |
| Total investments | 27,805,133 | 34,651,486 | 62,456,619 |
| **Total assets** | **$ 29,107,809** | **$ 35,238,244** | **$ 64,346,053** |
| **Liabilities** | | | |
| Accounts payable | $ 25,509 | $ 21,223 | $ 46,732 |
| **Total liabilities** | **$ 25,509** | **$ 21,223** | **$ 46,732** |
| **Net position** | | | |
| Net position restricted for pension benefits | $ 29,082,300 | $ 35,217,021 | $ 64,299,321 |
| **Total net position** | **$ 29,082,300** | **$ 35,217,021** | **$ 64,299,321** |

## VILLAGE OF PALM SPRINGS, FLORIDA

*Combining Statement of Changes in Fiduciary Net Position*
*Fiduciary Funds*
*Year Ended September 30, 2020*

| | General Employees Pension Fund | Police Officers Pension Fund | Total Pension Funds |
|---|---|---|---|
| **Additions** | | | |
| Contributions: | | | |
| Employer | $ 933,633 | $ 791,883 | $ 1,725,516 |
| Plan members | 55,317 | 109,215 | 164,532 |
| State of Florida | - | 153,120 | 153,120 |
| Total contributions | 988,950 | 1,054,218 | 2,043,168 |
| Investment income: | | | |
| Interest | 146,268 | 151,975 | 298,243 |
| Dividends | 476,310 | 1,226,499 | 1,702,809 |
| Net increase in fair value of investments | 1,614,234 | 1,920,823 | 3,535,057 |
| Investment expenses | (47,696) | (29,307) | (77,003) |
| Net investment income | 2,189,116 | 3,269,990 | 5,459,106 |
| **Total additions** | **3,178,066** | **4,324,208** | **7,502,274** |
| **Deductions** | | | |
| Administration | 74,305 | 76,382 | 150,687 |
| Benefits | 1,097,195 | 1,009,708 | 2,106,903 |
| **Total deductions** | **1,171,500** | **1,086,090** | **2,257,590** |
| Net increase in plan net position | 2,006,566 | 3,238,118 | 5,244,684 |
| Net position restricted for pension benefits, beginning of year | 27,075,734 | 31,978,903 | 59,054,637 |
| **Net position restricted for pension benefits, end of year** | **$ 29,082,300** | **$ 35,217,021** | **$ 64,299,321** |

# SCHEDULES OF LONG-TERM DEBT TO MATURITY

## VILLAGE OF PALM SPRINGS, FLORIDA

*Combining Schedule of Debt Service Requirements*
*(Principal and Interest) to Maturity*
*September 30, 2020*

| Fiscal Year Ending September 30, | Governmental Activities General Obligation Note Payable | Business-type Activities Note Payable | Total |
|---|---|---|---|
| 2021 | $ 429,335 | $ 942,237 | $ 1,371,572 |
| 2022 | 427,714 | 942,237 | 1,369,951 |
| 2023 | 426,056 | 942,237 | 1,368,293 |
| 2024 | 424,358 | 942,237 | 1,366,595 |
| 2025 | 422,618 | 942,237 | 1,364,855 |
| 2026 | 420,836 | 942,237 | 1,363,073 |
| 2027 | 419,011 | 942,237 | 1,361,248 |
| 2028 | 417,142 | 942,237 | 1,359,379 |
| 2029 | 415,229 | 942,237 | 1,357,466 |
| 2030 | 413,271 | 942,237 | 1,355,508 |
| 2031 | 411,264 | 942,237 | 1,353,501 |
| 2032 | 204,866 | 942,237 | 1,147,103 |
| 2033 | - | 942,241 | 942,241 |
| **Total** | **$ 4,831,700** | **$ 12,249,085** | **$ 17,080,785** |

## VILLAGE OF PALM SPRINGS, FLORIDA

*$6,477,462 General Obligation Note, dated February 24, 2012*

| Fiscal Year Ending | Principal | | Interest | | | Interest |
|---|---|---|---|---|---|---|
| September 30, | February 1 | August 1 | February 1 | August 1 | Total | Rate |
| 2021 | $ 155,491 | $ 157,350 | $ 59,376 | $ 57,118 | $ 429,335 | 2.905% |
| 2022 | 159,230 | 161,132 | 54,832 | 52,520 | 427,714 | 2.905% |
| 2023 | 163,058 | 165,007 | 50,180 | 47,811 | 426,056 | 2.905% |
| 2024 | 166,979 | 168,974 | 45,415 | 42,990 | 424,358 | 2.905% |
| 2025 | 170,993 | 173,037 | 40,536 | 38,052 | 422,618 | 2.905% |
| 2026 | 175,104 | 177,197 | 35,539 | 32,996 | 420,836 | 2.905% |
| 2027 | 179,314 | 181,457 | 30,422 | 27,818 | 419,011 | 2.905% |
| 2028 | 183,626 | 185,820 | 25,182 | 22,514 | 417,142 | 2.905% |
| 2029 | 188,040 | 190,287 | 19,817 | 17,085 | 415,229 | 2.905% |
| 2030 | 192,561 | 194,863 | 14,322 | 11,525 | 413,271 | 2.905% |
| 2031 | 197,191 | 199,547 | 8,695 | 5,831 | 411,264 | 2.905% |
| 2032 | 201,933 | - | 2,933 | - | 204,866 | 2.905% |
| **Total** | **$ 2,133,520** | **$ 1,954,671** | **$ 387,249** | $ **356,260** | **$ 4,831,700** | |

## VILLAGE OF PALM SPRINGS, FLORIDA

*$14,352,351 Water and Sewer Promissory Note, dated April 15, 2013*

| Fiscal Year Ending | Principal | | Interest | | | Interest |
|---|---|---|---|---|---|---|
| September 30, | November 1 | May 1 | November 1 | May 1 | Total | Rate |
| 2021 | $ 323,826 | $ 328,529 | $ 147,292 | $ 142,590 | $ 942,237 | 2.905% |
| 2022 | 333,301 | 338,142 | 137,818 | 132,976 | 942,237 | 2.905% |
| 2023 | 343,053 | 348,035 | 128,066 | 123,083 | 942,237 | 2.905% |
| 2024 | 353,090 | 358,218 | 118,029 | 112,900 | 942,237 | 2.905% |
| 2025 | 363,421 | 368,699 | 107,698 | 102,419 | 942,237 | 2.905% |
| 2026 | 374,054 | 379,487 | 97,064 | 91,632 | 942,237 | 2.905% |
| 2027 | 384,998 | 390,590 | 86,120 | 80,529 | 942,237 | 2.905% |
| 2028 | 396,263 | 402,018 | 74,856 | 69,100 | 942,237 | 2.905% |
| 2029 | 407,857 | 413,780 | 63,262 | 57,338 | 942,237 | 2.905% |
| 2030 | 419,790 | 425,887 | 51,328 | 45,232 | 942,237 | 2.905% |
| 2031 | 432,073 | 438,348 | 39,046 | 32,770 | 942,237 | 2.905% |
| 2032 | 444,714 | 451,173 | 26,404 | 19,946 | 942,237 | 2.905% |
| 2033 | 457,726 | 464,378 | 13,392 | 6,745 | 942,241 | 2.905% |
| **Total** | **$ 5,034,166** | **$ 5,107,284** | **$ 1,090,375** | **$ 1,017,260** | **$ 12,249,085** | |

# STATISTICAL SECTION

# STATISTICAL SECTION

This part of the Village of Palm Springs' comprehensive annual financial report presents detailed information as a context for understanding what the information in the financial statements, note disclosures, and required supplementary information says about the Village of Palm Springs' overall financial health.

**Contents** **Page**


Financial Trends ..... 100

*These schedules contain trend information to help the reader understand how the Village of Palm Springs' financial performance and well-being have changed over time.*

Revenue Capacity ..... 113

*These schedules contain information to help the reader assess the Village of Palm Springs' most significant local revenue sources, the property tax and water and sewer revenue.*

Debt Capacity ..... 118

*These schedules present information to help the reader assess the affordability of the Village of Palm Springs' current levels of outstanding debt and the Village of Palm Springs' ability to issue additional debt in the future.*

Demographic and Economic Information ..... 122

*These schedules offer demographic and economic indicators to help the reader understand the environment within which the Village of Palm Springs' financial activities take place.*

Operating Information ..... 124

*These schedules contain service and infrastructure data to help the reader understand how the information in the Village of Palm Springs' financial report relates to the services the Village of Palm Springs provides and the activities it performs.*


Sources: Unless otherwise noted, the information in these schedules is derived from the comprehensive annual financial reports for the relevant year.

## VILLAGE OF PALM SPRINGS, FLORIDA

*Net Position by Component*
*Last Ten Fiscal Years*
*Accrual Basis of Accounting*

| | Fiscal Year | | | |
|---|---|---|---|---|
| | **2011** | **2012** | **2013** | **2014** |
| **Governmental activities** | | | | |
| Net investment in capital assets | $ 7,886,263 | $ 7,814,268 | $ 8,421,324 | $ 8,549,304 |
| Restricted | 74,591 | 36,542 | 173,140 | 199,423 |
| Unrestricted (deficit) | 5,925,371 | 6,149,891 | 5,700,543 | 5,896,704 |
| **Total governmental activities net position** | **$ 13,886,225** | **$ 14,000,701** | **$ 14,295,007** | **$ 14,645,431** |
| **Business-type activities** | | | | |
| Net investment in capital assets | $ 34,478,958 | $ 36,404,485 | $ 34,510,573 | $ 33,752,308 |
| Restricted | 1,185,083 | 1,068,872 | - | - |
| Unrestricted | 2,719,288 | 3,402,239 | 8,326,003 | 12,361,298 |
| **Total business-type activities net position** | **$ 38,383,329** | **$ 40,875,595** | **$ 42,836,576** | **$ 46,113,606** |
| **Primary government** | | | | |
| Net investment in capital assets | $ 42,365,221 | $ 44,218,752 | $ 42,931,897 | $ 42,301,612 |
| Restricted | 1,259,674 | 1,105,414 | 173,140 | 199,423 |
| Unrestricted | 8,644,659 | 9,552,129 | 14,026,546 | 18,258,002 |
| **Total primary government net position** | **$ 52,269,554** | **$ 54,876,296** | **$ 57,131,583** | **$ 60,759,037** |

Note: GASB Statement No. 68 was adopted for 2015 resulting in the reduction of unrestricted net position by approximately $11 million for net pension liabilities of the Village's defined benefit pension plans.

| Fiscal Year | | | | | |
|---|---|---|---|---|---|
| 2015 | 2016 | 2017 | 2018 | 2019 | 2020 |
| $ 8,975,454 | $ 9,045,692 | $ 9,696,530 | $ 10,168,421 | $ 12,007,314 | $ 14,490,482 |
| 220,651 | 265,623 | 1,413,016 | 2,694,732 | 3,790,452 | 4,476,498 |
| (1,336,279) | 128,127 | 724,425 | 3,340,999 | 4,593,586 | 5,442,274 |
| **$ 7,859,826** | **$ 9,439,442** | **$ 11,833,971** | **$ 16,204,152** | **$ 20,391,352** | **$ 24,409,254** |
| $ 36,619,254 | $ 35,225,407 | $ 34,619,498 | $ 35,346,033 | $ 36,936,597 | $ 37,408,106 |
| - | - | - | - | - | - |
| 11,936,786 | 18,310,727 | 23,050,351 | 26,410,896 | 29,391,851 | 32,816,459 |
| **$ 48,556,040** | **$ 53,536,134** | **$ 57,669,849** | **$ 61,756,929** | **$ 66,328,448** | **$ 70,224,565** |
| $ 45,594,708 | $ 44,271,099 | $ 44,316,028 | $ 45,514,454 | $ 48,943,911 | $ 51,898,588 |
| 220,651 | 265,623 | 1,413,016 | 2,694,732 | 3,790,452 | 4,476,498 |
| 10,600,507 | 18,438,854 | 23,774,776 | 29,751,895 | 33,985,437 | 38,258,733 |
| **$ 56,415,866** | **$ 62,975,576** | **$ 69,503,820** | **$ 77,961,081** | **$ 86,719,800** | **$ 94,633,819** |

## VILLAGE OF PALM SPRINGS, FLORIDA

*Changes in Net Position*
*Last Ten Fiscal Years*
*Accrual Basis of Accounting*

| | Fiscal Year | | | |
|---|---|---|---|---|
| | **2011** | **2012** | **2013** | **2014** |
| **Expenses** | | | | |
| Governmental activities: | | | | |
| General government | $ 1,667,207 | $ 1,732,639 | $ 1,973,168 | $ 1,934,046 |
| Public safety | 6,433,149 | 7,271,962 | 7,574,060 | 7,743,529 |
| Physical environment | 856,370 | 891,160 | 951,966 | 942,471 |
| Transportation | 1,026,758 | 927,757 | 1,103,302 | 1,258,994 |
| Culture/recreation | 1,684,424 | 1,864,707 | 1,845,343 | 1,940,040 |
| Interest on long-term debt | 350,260 | 369,275 | 149,486 | 143,255 |
| **Total governmental activities expenses** | **12,018,168** | **13,057,501** | **13,597,325** | **13,962,335** |
| Business-type activities: | | | | |
| Water and Sewer Utility | 10,996,082 | 11,470,128 | 12,370,744 | 12,031,302 |
| Stormwater Utility | - | - | - | - |
| **Total business-type activities expenses** | **10,996,082** | **11,470,128** | **12,370,744** | **12,031,302** |
| **Total primary government expenses** | **$ 23,014,250** | **$ 24,527,629** | **$ 25,968,069** | **$ 25,993,637** |
| **Program Revenues** | | | | |
| Governmental activities: | | | | |
| Charges for services: | | | | |
| General government | $ 300,037 | $ 399,433 | $ 493,069 | $ 609,849 |
| Public safety | 1,458,760 | 1,239,586 | 1,110,553 | 908,282 |
| Physical environment | 882,409 | 883,230 | 924,432 | 971,312 |
| Culture/recreation | 408,706 | 393,644 | 332,020 | 369,651 |
| Operating grants and contributions: | | | | |
| General government | 2,800 | 7,200 | 4,669 | 931 |
| Public safety | 308,271 | 309,576 | 167,967 | 60,303 |
| Physical environment | 54,982 | 34,627 | 22,304 | 20,530 |
| Transportation | 54,020 | 68,854 | 69,743 | 71,833 |
| Culture/recreation | 14,034 | 16,741 | 19,128 | 20,840 |
| Capital grants and contributions: | | | | |
| General government | 13,544 | 27,755 | 35,237 | 20,351 |
| Public safety | 60,400 | 93,016 | 82,870 | 25,037 |
| Transportation | - | - | - | 7,495 |
| Culture/recreation | - | - | 250,000 | 144,796 |
| **Total governmental activities program revenues** | **3,557,963** | **3,473,665** | **3,511,992** | **3,231,210** |
| Business-type activities: | | | | |
| Charges for services: | | | | |
| Water/Sewer Utility | 13,871,774 | 14,510,608 | 15,065,056 | 15,681,023 |
| Stormwater Utility | - | - | - | - |
| Operating grants and contributions: Stormwater | - | - | - | - |
| Capital grants and contributions: | | | | |
| Water and Sewer Utility | 871,217 | 979,989 | 250,582 | 1,263,195 |
| **Total business-type activities program revenues** | **14,742,991** | **15,490,597** | **15,315,638** | **16,944,218** |
| **Total primary government program revenues** | **$ 18,300,954** | **$ 18,964,262** | **$ 18,827,630** | **$ 20,175,428** |
| **Net (expense)/revenue** | | | | |
| Governmental activities | $ (8,460,205) | $ (9,583,837) | $ (10,085,333) | $ (10,731,125) |
| Business-type activities | 3,746,909 | 4,020,470 | 2,944,894 | 4,912,916 |
| **Total primary government net expense** | **$ (4,713,296)** | **$ (5,563,367)** | **$ (7,140,439)** | **$ (5,818,209)** |

| Fiscal Year | | | | | |
|---|---|---|---|---|---|
| 2015 | 2016 | 2017 | 2018 | 2019 | 2020 |
| $ 1,926,924 | $ 2,066,477 | $ 2,294,992 | $ 2,211,693 | $ 2,835,997 | $ 2,879,926 |
| 7,519,632 | 8,503,036 | 8,797,959 | 8,839,413 | 9,970,520 | 9,446,884 |
| 936,986 | 966,071 | 1,119,815 | 1,067,111 | 1,075,033 | 1,173,626 |
| 1,278,825 | 1,703,726 | 2,214,506 | 1,787,841 | 2,093,367 | 2,201,178 |
| 1,940,121 | 1,998,486 | 1,925,521 | 1,875,636 | 1,986,225 | 1,644,442 |
| 136,871 | 130,337 | 123,644 | 133,395 | 133,416 | 124,680 |
| **13,739,359** | **15,368,133** | **16,476,437** | **15,915,089** | **18,094,558** | **17,470,736** |
| 11,916,368 | 12,980,353 | 13,870,807 | 14,465,968 | 15,383,962 | 15,595,379 |
| - | - | 109,848 | 125,644 | 87,898 | 12,885 |
| **11,916,368** | **12,980,353** | **13,980,655** | **14,591,612** | **15,471,860** | **15,608,264** |
| **$ 25,655,727** | **$ 28,348,486** | **$ 30,457,092** | **$ 30,506,701** | **$ 33,566,418** | **$ 33,079,000** |
| $ 761,725 | $ 595,521 | $ 640,371 | $ 772,038 | $ 866,346 | $ 938,452 |
| 1,410,893 | 1,297,305 | 1,335,980 | 1,492,961 | 1,997,624 | 1,055,961 |
| 977,800 | 1,078,923 | 1,090,501 | 1,109,491 | 1,133,848 | 1,147,017 |
| 406,639 | 353,494 | 383,402 | 267,262 | 285,825 | 102,789 |
| 12,789 | 6,269 | 47,206 | 7,281 | 368,408 | 69,606 |
| 200,830 | 97,117 | 70,454 | 31,083 | 35,217 | 38,517 |
| 15,180 | 12,553 | 22,208 | 5,731 | 2,015 | 461 |
| 73,985 | 76,203 | 104,519 | 107,930 | 111,168 | 114,504 |
| 28,194 | 29,510 | 26,173 | 22,159 | 25,188 | 17,166 |
| 100 | 27,642 | 292 | 9,936 | 6,993 | 16,578 |
| 24,453 | 38,173 | - | 34,779 | 30,446 | 35,840 |
| - | 6,288 | 148,881 | - | 97,305 | 84,103 |
| 231,224 | - | - | - | 247,522 | 882,802 |
| **4,143,812** | **3,618,998** | **3,869,987** | **3,860,651** | **5,207,905** | **4,503,796** |
| 16,916,445 | 18,010,253 | 19,159,149 | 19,920,293 | 20,955,084 | 21,095,572 |
| - | - | 366,756 | 382,799 | 382,253 | 519,265 |
| - | - | - | - | - | 6,902 |
| 928,503 | 1,479,734 | 779,774 | 544,508 | 732,102 | 134,188 |
| **17,844,948** | **19,489,987** | **20,305,679** | **20,847,600** | **22,069,439** | **21,755,927** |
| **$ 21,988,760** | **$ 23,108,985** | **$ 24,175,666** | **$ 24,708,251** | **$ 27,277,344** | **$ 26,259,723** |
| $ (9,595,547) | $ (11,749,135) | $ (12,606,450) | $ (12,054,438) | $ (12,886,653) | $ (12,966,940) |
| 5,928,580 | 6,509,634 | 6,325,024 | 6,255,988 | 6,597,579 | 6,147,663 |
| **$ (3,666,967)** | **$ (5,239,501)** | **$ (6,281,426)** | **$ (5,798,450)** | **$ (6,289,074)** | **$ (6,819,277)** |

## VILLAGE OF PALM SPRINGS, FLORIDA

*Changes in Net Position (Continued)*
*Last Ten Fiscal Years*
*Accrual Basis of Accounting*

| | Fiscal Year | | | |
|---|---|---|---|---|
| | **2011** | **2012** | **2013** | **2014** |
| **General Revenues and Other Changes in Net Position** | | | | |
| Governmental activities: | | | | |
| Taxes: | | | | |
| Property taxes | $ 2,647,462 | $ 2,560,178 | $ 2,594,762 | $ 2,821,713 |
| Utility service taxes | 1,992,185 | 2,060,461 | 2,325,477 | 2,344,161 |
| Franchise fees | 983,164 | 991,051 | 997,396 | 1,185,784 |
| Sales and use taxes | 1,353,681 | 1,595,146 | 1,710,823 | 1,850,102 |
| Business taxes | 246,354 | 273,306 | 281,084 | 304,853 |
| Intergovernmental, unrestricted | 452,923 | 496,719 | 590,295 | 669,279 |
| Investment revenues | 17,131 | 25,979 | 21,968 | - |
| Miscellaneous | 67,780 | 20,045 | 76,241 | 29,118 |
| Transfers | 1,541,902 | 1,675,428 | 1,781,592 | 1,876,539 |
| **Total governmental activities** | **9,302,582** | **9,698,313** | **10,379,638** | **11,081,549** |
| Business-type activities: | | | | |
| Investment revenues | 73,861 | 94,951 | 97,441 | 75,522 |
| Miscellaneous | 29,755 | 52,273 | 700,238 | 165,131 |
| Transfers | (1,541,902) | (1,675,428) | (1,781,592) | (1,876,539) |
| **Total business-type activities** | **(1,438,286)** | **(1,528,204)** | **(983,913)** | **(1,635,886)** |
| **Total primary government** | **$ 7,864,296** | **$ 8,170,109** | **$ 9,395,725** | **$ 9,445,663** |
| **Changes in Net Position** | | | | |
| Governmental activities | $ 842,377 | $ 114,476 | $ 294,305 | $ 350,424 |
| Business-type activities | 2,308,623 | 2,492,266 | 1,960,981 | 3,277,030 |
| **Total primary government** | **$ 3,151,000** | **$ 2,606,743** | **$ 2,255,286** | **$ 3,627,454** |

| Fiscal Year | | | | | |
|---|---|---|---|---|---|
| 2015 | 2016 | 2017 | 2018 | 2019 | 2020 |
| | | | | | |
| $ 2,998,529 | $ 3,548,352 | $ 3,875,182 | $ 4,326,702 | $ 4,593,448 | $ 4,905,214 |
| 2,434,013 | 2,756,176 | 2,701,235 | 2,746,260 | 2,782,726 | 2,790,188 |
| 1,280,301 | 1,426,438 | 1,469,041 | 1,523,434 | 1,547,089 | 1,505,749 |
| 1,996,947 | 2,095,247 | 3,225,861 | 3,984,756 | 4,055,851 | 3,792,719 |
| 309,652 | 343,981 | 362,931 | 395,733 | 386,375 | 394,669 |
| 783,950 | 853,427 | 890,179 | 918,574 | 952,709 | 851,029 |
| 5,648 | 3,933 | 21,112 | 107,903 | 233,021 | 110,534 |
| 133,277 | 67,163 | 76,907 | 135,819 | 107,496 | 144,641 |
| 1,935,796 | 2,234,034 | 2,378,531 | 2,423,338 | 2,415,138 | 2,490,099 |
| **11,878,113** | **13,328,751** | **15,000,979** | **16,562,519** | **17,073,853** | **16,984,842** |
| | | | | | |
| 129,029 | 120,205 | 143,781 | 214,215 | 326,288 | 186,550 |
| 259,680 | 584,289 | 43,441 | 71,805 | 62,790 | 52,003 |
| (1,935,796) | (2,234,034) | (2,378,531) | (2,423,338) | (2,415,138) | (2,490,099) |
| **(1,547,087)** | **(1,529,540)** | **(2,191,309)** | **(2,137,318)** | **(2,026,060)** | **(2,251,546)** |
| **$ 10,331,026** | **$ 11,799,211** | **$ 12,809,670** | **$ 14,425,201** | **$ 15,047,793** | **$ 14,733,296** |
| | | | | | |
| $ 2,282,566 | $ 1,579,616 | $ 2,394,529 | $ 4,508,081 | $ 4,187,200 | $ 4,017,902 |
| 4,381,493 | 4,980,094 | 4,133,715 | 4,118,670 | 4,571,519 | 3,896,117 |
| **$ 6,664,059** | **$ 6,559,710** | **$ 6,528,244** | **$ 8,626,751** | **$ 8,758,719** | **$ 7,914,019** |

## VILLAGE OF PALM SPRINGS, FLORIDA

*Governmental Activities Tax Revenues by Source*
*Last Ten Fiscal Years*
*Accrual Basis of Accounting*

| Fiscal Year | Property Tax | Utility Service Taxes | Franchise Fees | Sales and Use Taxes [1] | Business Taxes | Total |
|---|---|---|---|---|---|---|
| **2011** | $ 2,647,462 | $ 1,992,185 | $ 983,164 | $ 1,353,681 | $ 246,354 | $ 7,222,846 |
| **2012** | 2,560,178 | 2,060,461 | 991,051 | 1,595,146 | 273,306 | 7,480,142 |
| **2013** | 2,594,762 | 2,325,477 | 997,396 | 1,710,823 | 281,084 | 7,909,542 |
| **2014** | 2,821,713 | 2,344,161 | 1,185,784 | 1,850,102 | 304,853 | 8,506,613 |
| **2015** | 2,998,529 | 2,434,013 | 1,280,301 | 1,996,947 | 309,652 | 9,019,442 |
| **2016** | 3,548,352 | 2,756,176 | 1,426,438 | 2,095,247 | 343,981 | 10,170,194 |
| **2017** | 3,875,182 | 2,701,235 | 1,469,041 | 3,225,861 | 362,931 | 11,634,250 |
| **2018** | 4,326,702 | 2,746,260 | 1,523,434 | 3,984,756 | 395,733 | 12,976,885 |
| **2019** | 4,593,448 | 2,782,726 | 1,547,089 | 4,055,851 | 386,375 | 13,365,489 |
| **2020** | 4,905,214 | 2,790,188 | 1,505,749 | 3,792,719 | 394,669 | 13,388,539 |

[1] In 2017 the Village began receiving the proceeds of a local option sales tax approved by voters for a 10 year period to finance local infrastructure capital projects.

## VILLAGE OF PALM SPRINGS, FLORIDA

*Fund Balances of Governmental Funds*
*Last Ten Fiscal Years*
*Modified Accrual Basis of Accounting*

| | Fiscal Year | | | |
|---|---|---|---|---|
| | **2011** | **2012** | **2013** | **2014** |
| **General Fund** | | | | |
| Nonspendable: | | | | |
| Inventory | $ 34,717 | $ 28,984 | $ 40,204 | $ 25,056 |
| Noncurrent note receivable | - | 1,230,561 | 1,230,561 | - |
| Restricted | | | | |
| Sales tax infrastructure capital projects | - | - | - | - |
| Assigned to: | | | | |
| Disaster recovery | 1,500,000 | 1,500,000 | 1,500,000 | 1,500,000 |
| Capital projects | 3,000,000 | 1,769,439 | 1,500,000 | 1,500,000 |
| Library | 53,935 | 46,778 | 45,926 | 38,407 |
| Subsequent year's budget | 193,386 | 702,241 | 895,456 | - |
| Unassigned | 1,616,440 | 1,236,824 | 883,906 | 3,172,150 |
| **Total General Fund** | **$ 6,398,478** | **$ 6,514,827** | **$ 6,096,053** | **$ 6,235,613** |
| **All other governmental funds** | | | | |
| Restricted for: | | | | |
| Law enforcement | $ 30,045 | $ 32,875 | $ 73,102 | $ 67,356 |
| Debt service | 44,546 | 3,668 | 100,038 | 132,067 |
| **Total all other governmental funds** | **$ 74,591** | **$ 36,543** | **$ 173,140** | **$ 199,423** |

| Fiscal Year | | | | | |
|---|---|---|---|---|---|
| 2015 | 2016 | 2017 | 2018 | 2019 | 2020 |
| $ 20,999 | $ 39,648 | $ 69,969 | $ 84,622 | $ 85,456 | $ 70,539 |
| - | - | - | - | - | - |
| - | - | 1,141,086 | 2,419,381 | 3,488,534 | 4,172,367 |
| 1,500,000 | 1,500,000 | 1,500,000 | 3,000,000 | 3,000,000 | 3,000,000 |
| 1,500,000 | 1,500,000 | 1,500,000 | 1,500,000 | 1,500,000 | 1,500,000 |
| 38,851 | 38,240 | 37,488 | 36,651 | 36,651 | - |
| - | 1,227,384 | 1,625,101 | 1,471,258 | 2,338,399 | 1,183,000 |
| 4,308,087 | 4,208,075 | 4,523,176 | 5,741,431 | 6,307,593 | 8,095,194 |
| **$ 7,367,937** | **$ 8,513,347** | **$ 10,396,820** | **$ 14,253,343** | **$ 16,756,633** | **$ 18,021,100** |
| $ 61,393 | $ 73,907 | $ 51,890 | $ 44,309 | $ 54,669 | $ 54,669 |
| 159,258 | 191,716 | 220,040 | 231,042 | 247,249 | 249,462 |
| **$ 220,651** | **$ 265,623** | **$ 271,930** | **$ 275,351** | **$ 301,918** | **$ 304,131** |

## VILLAGE OF PALM SPRINGS, FLORIDA

*Changes in Fund Balances of Governmental Funds*
*Last Ten Fiscal Years*
*Modified Accrual Basis of Accounting*

| | Fiscal Year | | | |
|---|---|---|---|---|
| | **2011** | **2012** | **2013** | **2014** |
| **Revenues** | | | | |
| Taxes | $ 5,869,165 | $ 5,884,996 | $ 6,198,719 | $ 6,656,511 |
| Permits | 714,739 | 168,288 | 307,084 | 370,268 |
| Intergovernmental | 2,295,482 | 2,659,483 | 2,940,184 | 2,783,893 |
| Confiscated property | 15,917 | 13,141 | 54,418 | 13,006 |
| Charges for services | 1,610,698 | 1,714,744 | 1,725,760 | 1,791,823 |
| Fines and forfeitures | 502,914 | 722,558 | 442,231 | 344,128 |
| Contributions and donations | 15,051 | 15,163 | 8,755 | 10,437 |
| Investment income | 17,130 | 25,979 | 21,968 | - |
| Facility rental | 149,173 | 248,207 | 276,347 | 277,394 |
| Miscellaneous | 67,975 | 43,991 | 108,281 | 27,220 |
| **Total revenues** | **11,258,244** | **11,496,550** | **12,083,747** | **12,274,680** |
| **Expenditures** | | | | |
| General government | 1,488,923 | 1,548,147 | 1,778,375 | 1,790,739 |
| Public safety | 6,189,105 | 7,011,301 | 7,260,425 | 7,508,307 |
| Physical environment | 822,736 | 857,942 | 918,747 | 920,662 |
| Transportation | 993,226 | 866,362 | 1,031,956 | 1,152,511 |
| Culture/recreation | 1,512,891 | 1,678,324 | 1,682,918 | 1,756,672 |
| Capital outlay | 506,477 | 404,172 | 1,066,404 | 414,008 |
| Debt service | | | | |
| Principal | 170,000 | 6,706,976 | 258,690 | 264,908 |
| Interest and other fiscal charges | 353,182 | 497,915 | 150,001 | 143,783 |
| **Total expenditures** | **12,036,540** | **19,571,139** | **14,147,516** | **13,951,590** |
| Excess of revenues over (under) expenditures | (778,296) | (8,074,589) | (2,063,769) | (1,676,910) |
| **Other financing sources (uses)** | | | | |
| Proceeds from the sale of capital assets | - | - | - | - |
| Transfers in | 1,541,902 | 1,813,637 | 1,919,801 | 1,876,539 |
| Transfers out | - | (138,209) | (138,209) | - |
| Redemption of bonds | - | 6,477,462 | - | - |
| **Total other financing sources (uses)** | **1,541,902** | **8,152,890** | **1,781,592** | **1,876,539** |
| **Net change in fund balances** | **$ 763,606** | **$ 78,301** | **$ (282,177)** | **$ 199,629** |
| Debt service as a percentage of non-capital expenditures | 4.54% | 37.59% | 3.12% | 3.02% |

| Fiscal Year | | | | | |
|---|---|---|---|---|---|
| **2015** | **2016** | **2017** | **2018** | **2019** | **2020** |
| $ 7,022,495 | $ 7,869,639 | $ 8,499,637 | $ 9,083,377 | $ 9,332,450 | $ 9,595,820 |
| 806,590 | 665,536 | 690,965 | 909,219 | 1,265,557 | 617,014 |
| 3,204,028 | 3,261,846 | 4,597,449 | 5,176,714 | 5,983,674 | 5,918,164 |
| 16,493 | 16,785 | 1,280 | 2,703 | 10,357 | - |
| 1,878,058 | 1,914,794 | 2,021,952 | 1,940,784 | 2,400,465 | 2,142,807 |
| 485,486 | 389,492 | 370,904 | 431,063 | 220,837 | 170,208 |
| 17,917 | 8,249 | 14,729 | 23,378 | 36,729 | 20,602 |
| 5,648 | 3,933 | 21,112 | 107,903 | 233,021 | 110,534 |
| 280,365 | 288,091 | 291,873 | 266,395 | 274,923 | 260,495 |
| 137,825 | 90,042 | 73,782 | 149,544 | 131,419 | 105,112 |
| **13,854,905** | **14,508,407** | **16,583,683** | **18,091,080** | **19,889,432** | **18,940,756** |
| 1,828,984 | 1,832,467 | 1,974,447 | 1,875,696 | 2,370,836 | 2,592,658 |
| 7,774,189 | 8,344,900 | 8,679,630 | 8,935,301 | 9,725,185 | 8,992,315 |
| 936,986 | 966,071 | 1,119,815 | 1,067,111 | 1,075,033 | 1,173,626 |
| 1,201,392 | 1,549,616 | 2,009,735 | 1,607,774 | 1,903,355 | 2,055,397 |
| 1,876,357 | 1,841,391 | 1,674,011 | 1,568,223 | 1,683,120 | 1,493,489 |
| 644,337 | 608,924 | 1,285,469 | 1,180,940 | 2,630,253 | 3,484,721 |
| 271,279 | 277,800 | 284,480 | 291,319 | 298,323 | 305,496 |
| 137,411 | 130,890 | 124,211 | 131,962 | 134,138 | 125,420 |
| **14,670,935** | **15,552,059** | **17,151,798** | **16,658,326** | **19,820,243** | **20,223,122** |
| (816,030) | (1,043,652) | (568,115) | 1,432,754 | 69,189 | (1,282,366) |
| - | - | 79,364 | 3,852 | 45,530 | 58,947 |
| 1,935,796 | 2,234,034 | 2,378,531 | 2,423,338 | 2,415,138 | 2,490,099 |
| - | - | - | - | - | - |
| - | - | - | - | - | - |
| **1,935,796** | **2,234,034** | **2,457,895** | **2,427,190** | **2,460,668** | **2,549,046** |
| **$ 1,119,766** | **$ 1,190,382** | **$ 1,889,780** | **$ 3,859,944** | **$ 2,529,857** | **$ 1,266,680** |
| 2.91% | 2.73% | 2.58% | 2.73% | 2.52% | 2.57% |

## VILLAGE OF PALM SPRINGS, FLORIDA

*General Governmental Tax Revenues by Source*
*Last Ten Fiscal Years*
*Modified Accrual Basis of Accounting*

| Fiscal Year | Property Taxes | Utility Service Taxes | Franchise Fees | Sales Taxes [1] | Business Taxes | Total |
|---|---|---|---|---|---|---|
| **2011** | $ 2,647,462 | $ 1,992,185 | $ 983,164 | $ 1,011,880 | $ 246,354 | $ 6,881,045 |
| **2012** | 2,560,178 | 2,060,461 | 991,051 | 1,247,855 | 273,306 | 7,132,851 |
| **2013** | 2,594,762 | 2,325,477 | 997,396 | 1,361,148 | 281,084 | 7,559,867 |
| **2014** | 2,821,713 | 2,344,161 | 1,185,784 | 1,460,937 | 304,853 | 8,117,448 |
| **2015** | 2,998,529 | 2,434,013 | 1,280,301 | 1,588,037 | 309,652 | 8,610,532 |
| **2016** | 3,548,352 | 2,590,541 | 1,386,765 | 1,666,296 | 343,981 | 9,535,935 |
| **2017** | 3,875,182 | 2,718,868 | 1,542,656 | 2,775,694 | 362,931 | 11,275,331 |
| **2018** | 4,326,702 | 2,763,893 | 1,597,049 | 3,539,375 | 395,733 | 12,622,752 |
| **2019** | 4,593,448 | 2,787,134 | 1,565,493 | 3,593,496 | 386,375 | 12,925,946 |
| **2020** | 4,905,214 | 2,790,188 | 1,505,749 | 3,380,088 | 394,669 | 12,975,908 |

[1] In 2017 the Village began receiving the proceeds of a local option sales tax approved by voters for a 10 year period to finance local infrastructure capital projects.

## VILLAGE OF PALM SPRINGS, FLORIDA

*Assessed Value of Taxable Property*
*Last Ten Fiscal Years*

| Fiscal Year Ending September 30, | Assessed Values | | Total Taxable Assessed Value [1] | Total Direct Village Tax Rate | Estimated Actual Taxable Value [1] |
|---|---|---|---|---|---|
| | Real Property | Personal Property | | | |
| 2011 | $ 567,430,825 | $ 43,299,294 | $ 610,730,119 | 4.4368 | $ 642,873,809 |
| 2012 | 561,474,280 | 37,867,369 | 599,341,649 | 4.4560 | 630,885,946 |
| 2013 | 538,354,151 | 41,213,909 | 579,568,060 | 4.6520 | 610,071,642 |
| 2014 | 579,838,469 | 46,108,599 | 625,947,068 | 4.6117 | 658,891,651 |
| 2015 | 630,185,838 | 49,808,780 | 679,994,618 | 4.5620 | 715,783,808 |
| 2016 | 766,908,222 | 54,396,561 | 821,304,783 | 4.4484 | 864,531,351 |
| 2017 | 861,187,815 | 52,677,032 | 913,864,847 | 4.3930 | 961,962,997 |
| 2018 | 1,054,443,560 | 55,112,685 | 1,109,556,245 | 4.0562 | 1,167,954,409 |
| 2019 | 1,160,721,571 | 60,657,553 | 1,221,379,124 | 3.8777 | 1,285,662,236 |
| 2020 | 1,255,996,692 | 68,819,182 | 1,324,815,874 | 3.8381 | 1,394,543,025 |

[1] The basis of assessed taxable value is approximately one hundred percent (100%) of actual taxable value, which is reduced for allowable exemptions. For each fiscal year ending September 30, property is valued as of January 1st of the preceding calendar year.

Source: Palm Beach County Property Appraiser's Office.

## VILLAGE OF PALM SPRINGS, FLORIDA

*Property Tax Rates - Direct and Overlapping Governments*
*Last Ten Fiscal Years*

| Fiscal Year Ending September 30, | General Fund | Debt Service | Total Village of Palm Springs | School District | Palm Beach County | Palm Beach County Fire Rescue | Special Taxing Districts | Total All |
|---|---|---|---|---|---|---|---|---|
| 2011 | 3.5000 | 0.9368 | 4.4368 | 8.1539 | 4.9960 | 3.4581 | 2.5552 | 23.6000 |
| 2012 | 3.5000 | 0.9560 | 4.4560 | 8.1800 | 4.9928 | 3.4581 | 2.3436 | 23.4305 |
| 2013 | 3.5000 | 1.1520 | 4.6520 | 7.5859 | 4.9853 | 3.4581 | 2.2280 | 22.9093 |
| 2014 | 3.9000 | 0.7117 | 4.6117 | 7.5859 | 4.9853 | 3.4581 | 2.2280 | 22.8690 |
| 2015 | 3.9000 | 0.6620 | 4.5620 | 7.5940 | 4.9732 | 3.4581 | 2.1731 | 22.7604 |
| 2016 | 3.9000 | 0.5484 | 4.4484 | 7.5120 | 4.9277 | 3.4581 | 2.0974 | 22.4436 |
| 2017 | 3.9000 | 0.4930 | 4.3930 | 7.0700 | 4.9142 | 3.4581 | 1.9453 | 21.7806 |
| 2018 | 3.6500 | 0.4062 | 4.0562 | 6.7689 | 4.9024 | 3.4581 | 1.7817 | 20.9673 |
| 2019 | 3.5000 | 0.3777 | 3.8777 | 6.5720 | 4.8980 | 3.4581 | 1.6920 | 20.4978 |
| 2020 | 3.5000 | 0.3381 | 3.8381 | 7.1640 | 4.8500 | 3.4581 | 1.6800 | 20.9902 |

Tax rate limits - Ten mills per Florida Statute 200.81 (one mill equals $1 per $1,000 of assessed valuation).

Scope of tax rate limit - No municipality shall levy ad valorem taxes for real and tangible personal property in excess of ten mills of the assessed value, except for special benefits and debt service on obligations issued with the approval of those taxpayers subject to ad valorem taxes.

Taxes assessed - January 1

Taxes due - March 31

Taxes delinquent - April 1

Discount allowed - 4% November; 3% December; 2% January; 1% February

Penalties for delinquent taxes - 2.5% after April 1, increase .5% each ten days; maximum 5%

Tax collector - Palm Beach County

Tax collector's commission - None

## VILLAGE OF PALM SPRINGS, FLORIDA

*Principal Property Taxpayers*
*Current Year and Nine Years Ago*

| | 2020 | | | |
|---|---|---|---|---|
| | Taxable Assessed Valuation | Taxes | Rank | Percentage of Total Taxes Levied |
| Morguard Emerald Apartments LLC | $ 33,670,079 | $ 117,845 | 1 | 2.32% |
| Oxygen Holdings LLC | 23,278,490 | 81,475 | 2 | 1.60% |
| 555 Kirk LLC | 22,540,975 | 78,893 | 3 | 1.55% |
| Regency Centers LP | 18,316,944 | 64,109 | 4 | 1.26% |
| Florida Power & Light Co | 18,305,599 | 64,070 | 5 | 1.26% |
| Phillips Lake Worth | 16,200,000 | 56,700 | 6 | 1.11% |
| Jerjo, Inc. | 15,499,344 | 54,248 | 7 | 1.07% |
| Portofino Associates, Ltd | 13,000,000 | 45,500 | 8 | 0.89% |
| Woodhaven LLC | 12,747,728 | 44,617 | 9 | 0.88% |
| Four FLA Shopping Center Prop Ltd | 12,125,607 | 42,440 | 10 | 0.83% |
| IRT Property Co | - | - | - | - |
| CSC Village Club Apts LTD | - | - | - | - |
| Advenir at Pines LLC | - | - | - | - |
| Syms Corp. | - | - | - | - |
| Lakeshore Center LLC | - | - | - | - |
| Totals | $ 185,684,766 | $ 649,897 | | 12.77% |

Note: Information obtained from the Palm Beach County Tax Collector.

| 2011 | | | |
|---|---|---|---|
| Taxable Assessed Valuation | Taxes | Rank | Percentage of Total Taxes Levied |
| $ - | $ - | - | - |
| - | - | - | - |
| - | - | - | - |
| - | - | - | - |
| - | - | - | - |
| 14,500,000 | 62,815 | 1 | 2.32% |
| 5,579,619 | 24,171 | 9 | 0.89% |
| 10,500,000 | 45,487 | 4 | 1.68% |
| 6,973,540 | 30,210 | 8 | 1.11% |
| 8,500,000 | 36,823 | 5 | 1.36% |
| 13,493,798 | 58,456 | 2 | 2.16% |
| 12,531,251 | 54,287 | 3 | 2.00% |
| 8,200,537 | 35,526 | 6 | 1.31% |
| 8,052,222 | 34,883 | 7 | 1.29% |
| 5,529,309 | 23,954 | 10 | 0.88% |
| $ 93,860,276 | $ 406,612 | | 15.00% |

## VILLAGE OF PALM SPRINGS, FLORIDA

*Property Tax Levies and Collections*
*Last Ten Fiscal Years*

| Fiscal Year Ending September 30, | Net Tax Levy [1] | Current Tax Collections | Percent of Levy Collected | Delinquent Tax Collections | Total Property Tax Collections | Collections as a Percent of Current Levy |
|---|---|---|---|---|---|---|
| 2011 | $ 2,712,213 | $ 2,602,097 | 95.94% | $ 45,365 | $ 2,647,462 | 97.61% |
| 2012 | 2,676,525 | 2,536,007 | 94.75% | 24,171 | 2,560,178 | 95.65% |
| 2013 | 2,705,765 | 2,569,665 | 94.97% | 25,097 | 2,594,762 | 95.90% |
| 2014 | 2,891,310 | 2,766,116 | 95.67% | 55,597 | 2,821,713 | 97.59% |
| 2015 | 3,105,266 | 2,985,713 | 96.15% | 12,816 | 2,998,529 | 96.56% |
| 2016 | 3,626,644 | 3,523,215 | 97.15% | 25,137 | 3,548,352 | 97.84% |
| 2017 | 3,998,600 | 3,869,639 | 96.77% | 5,543 | 3,875,182 | 96.91% |
| 2018 | 4,501,583 | 4,324,653 | 96.07% | 2,049 | 4,326,702 | 96.12% |
| 2019 | 4,737,097 | 4,567,270 | 96.41% | 26,178 | 4,593,448 | 96.97% |
| 2020 | 5,085,728 | 4,897,102 | 96.29% | 8,112 | 4,905,214 | 96.45% |

Note: All property taxes are assessed and collected by Palm Beach County without charge to the Village. Collections are distributed in full as collected.

[1] Tax levy, net of allowance for discounts.

## VILLAGE OF PALM SPRINGS, FLORIDA

*Water and Sewer Revenue Base*
*Last Ten Fiscal Years*

| Fiscal Year Ending September 30, | Water | | | Number of Active Water Customer Accounts | Wastewater | | Number of Active Wastewater Customer Accounts |
|---|---|---|---|---|---|---|---|
| | Gallons Consumed [1] | | Base Rate [2] | | Gallons Treated [1] | Base Rate [3] | |
| 2011 | 1,368,202 | **(a)** | $ 18.26 | 12,374 | 859,929 | $ 29.39 | 10,375 |
| 2012 | 1,238,598 | **(a)** | 18.81 | 12,536 | 915,307 | 30.26 | 10,716 |
| 2013 | 1,367,780 | | 19.37 | 12,455 | 970,372 | 31.18 | 10,722 |
| 2014 | 1,387,109 | | 20.04 | 12,568 | 979,943 | 32.58 | 11,069 |
| 2015 | 1,423,793 | | 20.93 | 12,536 | 1,001,707 | 34.03 | 11,247 |
| 2016 | 1,436,737 | | 21.88 | 12,588 | 1,051,102 | 35.58 | 11,590 |
| 2017 | 1,560,048 | | 22.85 | 12,604 | 1,058,776 | 37.19 | 11,653 |
| 2018 | 1,407,411 | | 23.89 | 12,658 | 1,112,553 | 38.86 | 11,606 |
| 2019 | 1,397,500 | | 24.47 | 13,569 | 1,097,192 | 39.85 | 12,501 |
| 2020 | 1,496,422 | | 24.47 | 13,696 | 1,120,147 | 39.85 | 12,597 |

[1] Gallons are in thousands.

[2] The base water rate is for a residential customer located inside the Village incorporated area consuming 4,000 gallons a month.

[3] The base wastewater rate is for a residential customer located inside the Village incorporated area using 4,000 gallons a month.

Source: Village of Palm Springs Utility Department.

**(a)** Decrease in consumption due to mandatory water restrictions for severe drought conditions in South Florida.

## VILLAGE OF PALM SPRINGS, FLORIDA

*Ratios of Outstanding Debt by Type*
*Last Ten Fiscal Years*

| Fiscal Year | Governmental Activities | | Business-type Activities | | Total [1] Primary Government | Percentage of Personal Income [2] | Per Capita |
|---|---|---|---|---|---|---|---|
| | General Obligation Bonds | General Obligation Note Payable | Water & Sewer Revenue Bonds | Water & Sewer Notes Payable | | | |
| 2011 | $ 6,570,000 | $ - | $ 11,162,172 | $ 890,959 | $ 18,623,131 | 2.93% | $ 984 |
| 2012 | - | 6,340,486 | 10,376,252 | 69,933 | 16,786,671 | 2.79% | 849 |
| 2013 | - | 6,081,797 | - | 14,352,351 | 20,434,148 | 3.33% | 1,025 |
| 2014 | - | 5,816,888 | - | 13,799,533 | 19,616,421 | 3.01% | 957 |
| 2015 | - | 5,545,609 | - | 13,217,997 | 18,763,606 | 2.69% | 848 |
| 2016 | - | 5,267,809 | - | 12,622,479 | 17,890,288 | 2.46% | 803 |
| 2017 | - | 4,983,329 | - | 12,012,643 | 16,995,972 | 2.04% | 757 |
| 2018 | - | 4,692,010 | - | 11,408,224 | 16,100,234 | 1.94% | 694 |
| 2019 | - | 4,393,687 | - | 10,775,261 | 15,168,948 | 1.65% | 652 |
| 2020 | - | 4,088,191 | - | 10,141,450 | 14,229,641 | 1.48% | 607 |

**Note:** Details about the Village's outstanding debt can be found in the notes to the financial statements. The debt for the business-type activities represents debt for our water treatment plants and wastewater collection and transmission system. These facilities serve our residents, as well as non-residents on our water and sewer utility system.

[1] The Village does not have a legal debt margin.

[2] Based on personal income information for Palm Beach County, Florida. Personal income information is not available for the Village.

## VILLAGE OF PALM SPRINGS, FLORIDA

*Ratios of General Bonded Debt Outstanding*
*Last Ten Fiscal Years*

| Fiscal Year | General Obligation Bonded Debt | Less: Amounts Available in Debt Service Fund | Total | Assessed Value of Taxable Property | Percentage of Assessed Value of Taxable Property | Population | Per Capita |
|---|---|---|---|---|---|---|---|
| 2011 | $ 6,570,000 | $ 44,546 | $ 6,525,454 | $ 610,730,119 | 1.07% | 18,928 | $ 344.75 |
| 2012 | - | - | - | 599,341,649 | 0.00% | 19,769 | - |
| 2013 | - | - | - | 579,568,060 | 0.00% | 19,938 | - |
| 2014 | - | - | - | 625,947,068 | 0.00% | 20,497 | - |
| 2015 | - | - | - | 679,994,618 | 0.00% | 22,130 | - |
| 2016 | - | - | - | 821,304,783 | 0.00% | 22,282 | - |
| 2017 | - | - | - | 913,864,847 | 0.00% | 22,458 | - |
| 2018 | - | - | - | 1,109,556,245 | 0.00% | 23,193 | - |
| 2019 | - | - | - | 1,221,379,124 | 0.00% | 23,250 | - |
| 2020 | - | - | - | 1,324,815,874 | 0.00% | 23,448 | - |

**Note:** The basis of assessed value is approximately one hundred percent (100%) of actual value. For each fiscal year ending September 30, property is valued as of January 1st of the preceding calendar year.

## VILLAGE OF PALM SPRINGS, FLORIDA

*Direct and Overlapping Governmental Activities Debt*
*September 30, 2020*

| | Total Outstanding | Percentage Applicable to Village of Palm Springs[1] | Amount Applicable to Village of Palm Springs |
|---|---|---|---|
| Direct: | | | |
| Village of Palm Springs | $ 4,088,191 | 100.00% | $ 4,088,191 |
| Overlapping: | | | |
| Palm Beach County | 44,740,000 | 0.54% | 241,596 |
| Palm Beach County School District | 6,498,000 | 0.54% | 35,089 |
| Total overlapping debt | 51,238,000 | | 276,685 |
| **Total direct and overlapping debt payable from ad valorem taxes** | | | **$ 4,364,876** |
| Estimated population | | | 23,448 |
| Total direct and overlapping debt per capita | | | $ 186.15 |

[1] Estimates based on 2020 ratio of assessed taxable values.

Note: The Village of Palm Springs has no legal debt margin.

Source: Finance Department, Village of Palm Springs, Florida
Palm Beach County Property Appraiser
School Board of Palm Beach County

## VILLAGE OF PALM SPRINGS, FLORIDA

*Water and Sewer Utility Pledged Revenue Coverage*
*Last Ten Fiscal Years*

| Fiscal Year Ended September 30, | Gross Revenue* | Operating Expenses** | Revenue Available for Debt Coverage | Current Debt Service | Current Coverage |
|---|---|---|---|---|---|
| 2011 | $ 14,846,608 | $ 7,792,488 | $ 7,054,120 | $ 2,155,448 | 3.27 |
| 2012 | 15,637,821 | 8,280,748 | 7,357,073 | 2,158,448 | 3.41 |
| 2013 | 16,113,317 | 8,707,089 | 7,406,228 | 1,316,965 | 5.62 |
| 2014 | 17,184,871 | 9,053,467 | 8,131,404 | 909,225 | 8.94 |
| 2015 | 18,233,657 | 8,996,708 | 9,236,949 | 907,891 | 10.17 |
| 2016 | 20,194,481 | 9,828,868 | 10,365,613 | 907,891 | 11.42 |
| 2017 | 20,126,145 | 10,628,234 | 9,497,911 | 907,891 | 10.46 |
| 2018 | 20,750,821 | 11,253,134 | 9,497,687 | 907,891 | 10.46 |
| 2019 | 22,076,264 | 12,244,926 | 9,831,338 | 959,410 | 10.25 |
| 2020 | 21,443,640 | 12,295,481 | 9,148,159 | 942,237 | 9.71 |

* Includes investment revenues, miscellaneous revenue and capital contributions.

** Excludes depreciation and amortization expense.

## VILLAGE OF PALM SPRINGS, FLORIDA

*Demographic and Economic Statistics*
*Last Ten Fiscal Years*

| Fiscal Year | Population[1] | Per Capita Personal Income[2] | Estimated Total Personal Income[3] | Median Age[2] | Education Level in Years of Formal Schooling | School Enrollment[2] | Unemployment Rate[2] |
|---|---|---|---|---|---|---|---|
| 2011 | 18,928 | $ 33,610 | $ 636,170,080 | 43.5 | N/A | 174,004 | 11.7% |
| 2012 | 19,769 | 30,487 | 602,697,503 | 43.7 | N/A | 177,307 | 10.8% |
| 2013 | 19,938 | 30,747 | 613,033,686 | 43.7 | N/A | 202,013 | 7.1% |
| 2014 | 20,497 | 31,743 | 650,636,271 | 43.2 | N/A | 203,580 | 6.6% |
| 2015 | 22,130 | 31,481 | 696,674,530 | 43.2 | N/A | 183,000 | 5.1% |
| 2016 | 22,282 | 32,690 | 728,398,580 | 44.0 | N/A | 188,808 | 4.9% |
| 2017 | 22,458 | 37,047 | 832,001,526 | 37.1 | N/A | 193,000 | 4.4% |
| 2018 | 23,193 | 35,732 | 828,732,276 | 44.5 | N/A | 174,000 | 3.0% |
| 2019 | 23,250 | 39,508 | 918,561,000 | 44.7 | N/A | 176,000 | 2.9% |
| 2020 | 23,448 | 40,888 | 958,741,824 | 44.8 | N/A | 169,250 | 7.0% |

**Data Sources:**

(1) The population for 2011 through 2020 was obtained from the University of Florida, Bureau of Economic Business Administration.

(2) Information provided by the Business Development Board of Palm Beach County. Information is for Palm Beach County, Florida. Information is not available for the Village.

(3) Total personal income information estimated based on per capita personal income for Palm Beach County, Florida.

N/A - Not Available.

## VILLAGE OF PALM SPRINGS, FLORIDA

*Principal Employers*
*Current Year and Nine Years Ago*

| Employer | 2020[1] Employees | 2020[1] Rank | 2020[1] Percentage of Total Village Employment | 2011[1] Employees | 2011[1] Rank | 2011[1] Percentage of Total Village Employment |
|---|---|---|---|---|---|---|
| Palm Beach County School District | 22,049 | 1 | N/A | 21,718 | 1 | N/A |
| Tenet Healthcare Corp. | 6,505 | 2 | N/A | 5,127 | 3 | N/A |
| Palm Beach County | 5,438 | 3 | N/A | 11,381 | 2 | N/A |
| NextEra Energy (formerly FPL) | 4,807 | 4 | N/A | 3,658 | 5 | N/A |
| Florida Atlantic University | 2,898 | 5 | N/A | 2,776 | 7 | N/A |
| Hospital Corp of America - HCA | 2,806 | 6 | N/A | 4,150 | 4 | N/A |
| Boca Raton Regional Hospital | 2,800 | 7 | N/A | - | - | - |
| Veterans Health Adminstration | 2,700 | 8 | N/A | 2,205 | 9 | N/A |
| The Breakers Hotel | 2,300 | 9 | N/A | - | - | - |
| Bethesda Health, Inc. | 2,282 | 10 | N/A | 2,300 | 8 | N/A |
| Wackenhut Corporation | - | - | - | 3,000 | 6 | N/A |
| Office Depot | - | - | - | 2,200 | 10 | N/A |
| Totals | 54,585 | | N/A | 58,515 | | N/A |

[1] Source: Business Development Board of Palm Beach County. Data is for Palm Beach County, Florida. Employment information for the Village is not available.

N/A - Not Available.

## VILLAGE OF PALM SPRINGS, FLORIDA

*Full-time Equivalent Village Government Employees by Function*
*Last Ten Fiscal Years*

| | 2011 | 2012 | 2013 | 2014 | 2015 | 2016 | 2017 | 2018 | 2019 | 2020 |
|---|---|---|---|---|---|---|---|---|---|---|
| General government | 14.5 | 15 | 16 | 15 | 15 | 15.5 | 15.5 | 11.5 | 17.5 | 18 |
| Public safety **(a)** | | | | | | | | | | |
| Building official | 1 | 1 | 1 | - | 1 | 1 | 1 | - | - | - |
| Planning, zoning & building | 4.5 | 5.5 | 4.5 | 5 | 5 | 6 | 6 | 6.5 | 7 | 6 |
| Police officers | 40 | 40 | 40 | 40 | 41 | 42 | 42 | 43 | 38 | 43 |
| Civilian police | 15.5 | 17 | 19 | 18.5 | 19.5 | 19 | 21 | 19 | 25 | 23.5 |
| Transportation | 11 | 12 | 13 | 13 | 13 | 12 | 18 | 16 | 19 | 18 |
| Culture/recreation | | | | | | | | | | |
| Library | 10 | 10 | 10 | 10 | 10 | 10.5 | 10 | 10.5 | 9 | 9 |
| Parks & recreation | 7.5 | 13 | 10 | 12.5 | 13.5 | 6 | 7 | 7.5 | 6.5 | 6.0 |
| Water & Sewer Utility | 58 | 60 | 65.5 | 63.5 | 64 | 65 | 59.5 | 59.5 | 59.5 | 60 |
| **Total** | **162.0** | **173.5** | **179.0** | **177.5** | **182.0** | **177.0** | **180.0** | **173.5** | **181.5** | **183.5** |

Sources: Village departments

**(a)** The Village contracted with Palm Beach County for fire-rescue services effective October 1, 2009.

## VILLAGE OF PALM SPRINGS, FLORIDA

*Operating Indicators by Function*
*Last Ten Fiscal Years*

| Function | Fiscal Year 2011 | 2012 | 2013 |
|---|---|---|---|
| **Public Safety** | | | |
| **Police** | | | |
| Physical arrests | 1,021 | 1,039 | 1,017 |
| Parking violations | 79 | 54 | 32 |
| Traffic violations | 9,038 | 7,201 | 6,081 |
| **Fire (a)** | | | |
| **Sanitation (b)** | | | |
| **Roads and Streets** | | | |
| Street resurfacing (miles) | 2.27 | 3.2 | 2.1 |
| Pot holes repaired | 765 | 820 | 842 |
| **Culture/Recreation** | | | |
| **Library** | | | |
| Circulation | 114,881 | 91,643 | 80,014 |
| Active cardholders | 5,191 | 4,475 | 4,162 |
| Reference questions | 10,748 | 47,548 | 46,452 |
| Programs offered | 656 | 576 | 712 |
| Program attendance | 7,947 | 7,388 | 6,161 |
| Total library visitors | 109,002 | 96,817 | 91,514 |
| **Parks and Recreation** | | | |
| Baseball participants | 224 | 191 | 170 |
| Soccer participants | 224 | 233 | 201 |
| Flag football participants | 311 | 278 | 241 |
| Cheerleading participants | 22 | 28 | 14 |
| Basketball participants | 161 | 194 | 188 |
| Youth athletic participants | 942 | 924 | 814 |
| Adult flag football | 156 | 80 | 108 |
| Camp program participants | 385 | 365 | 442 |
| Travel Club members | 268 | 261 | 224 |
| Special event participants | 5,123 | 5109 | 4,536 |
| Facility rentals | 836 | 1241 | 1,199 |
| **Water/Sewer Utility** | | | |
| Water accounts | 12,374 | 12,536 | 12,455 |
| Water customers | 19,878 | 19,952 | 19,996 |
| Water main breaks | 6 | 11 | 84 |
| Sewer accounts | 10,375 | 10,716 | 10,722 |
| Sewer customers | 17,459 | 17,812 | 17,903 |
| Avg daily water consumption (thousands of gallons) | 3,743 | 3,710 | 3,747 |

Sources: Village departments
N/A: Not available.
**(a)** The Village contracted with Palm Beach County for fire-rescue services effective October 1, 2009.
**(b)** The Village privatized sanitation operations effective April 1, 2008.

| Fiscal Year | | | | | | |
|---|---|---|---|---|---|---|
| 2014 | 2015 | 2016 | 2017 | 2018 | 2019 | 2020 |
| 964 | 1,084 | 1,005 | 815 | 759 | 543 | 434 |
| 15 | 23 | 19 | 38 | 16 | 15 | 23 |
| 6,533 | 7,143 | 10,501 | 5,928 | 4,153 | 4,612 | 5,000 |
| 1.2 | 3.3 | 3.93 | 3.1 | 2.1 | 1.3 | 1.2 |
| 800 | 848 | 973 | 52 | 48 | 35 | 27 |
| 71,855 | 59,976 | 49,159 | 37,613 | 31,175 | 26,519 | 13,642 |
| 4,019 | 3,549 | 3,475 | 3,245 | 3,262 | 4,001 | 6,380 |
| 43,490 | 41,405 | 40,945 | 32,736 | 39,272 | 36,024 | 17,942 |
| 430 | 435 | 335 | 360 | 350 | 242 | 268 |
| 4,333 | 3,944 | 876 | 9,170 | 9,329 | 5,174 | 6,495 |
| 92,768 | 86,648 | 80,498 | 78,896 | 70,553 | 61,505 | 31,102 |
| 129 | 122 | 80 | 83 | 68 | 52 | - |
| 188 | 209 | 165 | 161 | 147 | 101 | 210 |
| 242 | 236 | 234 | 187 | 156 | 156 | 141 |
| 14 | - | - | - | - | - | - |
| 258 | 236 | 255 | 220 | 170 | 162 | - |
| 831 | 803 | 734 | 651 | 541 | 471 | 351 |
| 168 | - | - | - | - | - | - |
| 452 | 550 | 486 | 394 | 696 | 892 | 272 |
| 230 | 229 | 196 | 115 | 146 | 119 | 59 |
| 6,000 | 6,200 | 7,380 | 2,610 | 6,085 | 6,480 | 3,750 |
| 1,250 | 1,200 | 1,150 | 237 | 133 | 157 | 79 |
| 12,568 | 12,536 | 12,588 | 12,604 | 12,658 | 12,982 | 13,037 |
| 20,121 | 20,140 | 20,152 | 20,178 | 19,985 | 20,251 | 20,300 |
| 82 | 17 | 4 | 10 | 3 | - | 3 |
| 11,069 | 11,247 | 11,590 | 11,653 | 11,606 | 12,043 | 12,100 |
| 18,333 | 18,567 | 18,921 | 19,028 | 18,770 | 19,274 | 19,239 |
| 3,800 | 3,919 | 3,926 | 3,960 | 3,627 | 3,561 | 3,397 |

## VILLAGE OF PALM SPRINGS, FLORIDA

*Capital Asset Statistics by Function*
*Last Ten Fiscal Years*

| Function | Fiscal Year 2011 | 2012 | 2013 | 2014 | 2015 |
|---|---|---|---|---|---|
| **Public Safety** | | | | | |
| **Police** | | | | | |
| Stations | 1 | 1 | 1 | 1 | 1 |
| Patrol units | 56 | 58 | 58 | 58 | 60 |
| **Fire (a)** | | | | | |
| **Sanitation (b)** | | | | | |
| Garbage trucks | 1 | 1 | 1 | 1 | 1 |
| Trash trucks | 1 | 1 | 1 | 1 | 1 |
| **Roads and Streets** | | | | | |
| Street lights | 29 | 81 | 81 | 81 | 81 |
| Lane miles | 69.21 | 66.61 | 72.7 | 76.19 | 76.29 |
| **Culture/Recreation** | | | | | |
| **Library** | | | | | |
| Books | 54,493 | 55,155 | 56,797 | 57,802 | 47,619 |
| **Parks & Recreation** | | | | | |
| Ballfields - lighted | 4 | 4 | 4 | 4 | 4 |
| Basketball courts | 2 | 2 | 2 | 2 | 3 |
| Soccer fields | 3 | 3 | 3 | 3 | 4 |
| Tennis courts | 4 | 4 | 4 | 4 | 4 |
| Pickleball courts | - | - | - | - | - |
| Futsal courts | - | - | - | - | - |
| Mini-golf course | 1 | 1 | 1 | 1 | 1 |
| Parks | 6 | 7 | 8 | 9 | 10 |
| **Water/Sewer Utility** | | | | | |
| Water mains (miles) | 126 | 126 | 126.58 | 130 | 130.11 |
| Sanitary sewers (miles) | 95.55 | 99.05 | 99.48 | 103.5 | 105.6 |
| Storm sewers (miles) | 3.96 | 3.96 | 4.29 | 24.5 | 25.66 |
| Fire hydrants | 872 | 872 | 872 | 992 | 993 |
| Maximum daily water treatment capacity (thousands of gallons) | 10,000 | 10,000 | 10,000 | 10,000 | 10,000 |

Sources: Village departments
N/A: Not available.
**(a)** The Village contracted with Palm Beach County for fire-rescue services effective October 1, 2009.
**(b)** The Village privatized sanitation operations effective April 1, 2008.

| Fiscal Year | | | | |
|---|---|---|---|---|
| **2016** | **2017** | **2018** | **2019** | **2020** |
| 1 | 1 | 1 | 1 | 1 |
| 61 | 61 | 63 | 64 | 65 |
| 1 | 1 | 1 | 1 | 1 |
| 1 | 1 | 1 | 1 | 1 |
| 81 | 81 | 81 | 81 | 82 |
| 78.08 | 77.76 | 77.76 | 77.76 | 77.76 |
| 51,928 | 44,420 | 53,738 | 40,878 | 34,816 |
| 4 | 4 | 4 | 4 | 4 |
| 3 | 3 | 3 | 3 | 3 |
| 4 | 4 | 4 | 4 | 4 |
| 4 | 4 | 4 | 4 | 2 |
| - | - | - | - | 1 |
| - | - | - | - | 1 |
| 1 | 1 | 1 | 1 | 1 |
| 10 | 10 | 11 | 11 | 12 |
| 130.11 | 135.3 | 135.3 | 135.3 | 135.57 |
| 105.6 | 114.8 | 114.8 | 105.27 | 105.82 |
| 25.66 | 14.6 | 14.6 | 14.74 | 14.8 |
| 993 | 984 | 984 | 984 | 993 |
| 10,000 | 10,000 | 10,000 | 10,000 | 10,000 |

## VILLAGE OF PALM SPRINGS, FLORIDA

*Schedule of Insurance in Force*
*September 30, 2020*

| Company | Policy Number | Type of Coverage | Property Covered | Amount of Coverage |
|---|---|---|---|---|
| FMIT#0459 | U711-50850<br>General & Police | Fiduciary liability | Pension trustees | $1,000,000 |
| FMIT#0459 | PROP DEC 1013<br>PROP02-1013 | Property inland marine | Village property | $22,248,869 |
| FMIT#0459 | SEGL 1013 | General liability | Village property | $1,000,000<br>$2,000,000 |
| FMIT#0459 | AL 1013<br>APD 1009 | Automobile liability<br>Physical damage | Any auto<br>Owned vehicles | $1,000,000<br>per schedule |
| FMIT#0459 | ECLE1013 | Crime | Employee theft, dishonesty, forgery | $100,000 |
| FMIT#0459 | 105185397 | Fiduciary bond | Chief Financial Officer | $1,000,000 |
| FMIT#0459 | EO 1009<br>LE 1007 | Professional liability<br>Professional liability | Public officials<br>Law enforcement | $1,000,000 |
| National Union Fire Insurance Co. | SRG9043155-B | Accidental death and dismemberment | Village employees | $66,000/<br>$190,000 |
| FMIT#0459 | WC EL 1013 | Workers compensation | Village employees | Florida statutory |
| Commerce & Industry Insurance Co. | FPL011943510 | Pollution liability | Village property | $1,000,000 per claim |

# COMPLIANCE SECTION

CALER, DONTEN, LEVINE,
COHEN, PORTER & VEIL, P.A.

CERTIFIED PUBLIC ACCOUNTANTS

WILLIAM K CALER, JR , CPA
LAURA E CLARK, CPA
LOUIS M COHEN, CPA
JOHN C COURTNEY, CPA, JD
DAVID S DONTEN, CPA
JAMES B HUTCHISON, CPA
JOEL H LEVINE, CPA
PATRICK E MANGAN, CPA
JAMES F MULLEN, IV, CPA
MICHAEL J NALEZYTY, CPA
THOMAS A PENCE, JR , CPA
SCOTT L PORTER, CPA
MARK D VEIL, CPA
MARTIN R WOODS, CPA

505 SOUTH FLAGLER DRIVE, SUITE 900
WEST PALM BEACH, FL 33401-5948
TELEPHONE: (561) 832-9292

759 SW FEDERAL HIGHWAY, SUITE 301
STUART, FL 34994-1019
TELEPHONE: (772) 872-2123

info@cdlcpa com

MEMBERS
AMERICAN INSTITUTE OF
CERTIFIED PUBLIC ACCOUNTANTS

FLORIDA INSTITUTE OF
CERTIFIED PUBLIC ACCOUNTANTS

# Independent Auditor's Report on Internal Control Over Financial Reporting and on Compliance and Other Matters Based on an Audit of Financial Statements Performed in Accordance With *Government Auditing Standards*

The Honorable Mayor and
Village Council
Village of Palm Springs, Florida

We have audited, in accordance with U.S. generally accepted auditing standards and the standards applicable to financial audits contained in *Government Auditing Standards* issued by the Comptroller General of the United States, the accompanying financial statements of the governmental activities, business-type activities, each major fund and the aggregate remaining fund information of the Village of Palm Springs, Florida, as of and for the year ended September 30, 2020, and the related notes to the financial statements, which collectively comprise the basic financial statements of the Village of Palm Springs, Florida, and have issued our report thereon dated April 26, 2021.

**Internal Control Over Financial Reporting**

In planning and performing our audit of the financial statements, we considered the internal control over financial reporting (internal control) of the Village of Palm Springs, Florida, as a basis for designing audit procedures that are appropriate in the circumstances for the purpose of expressing our opinions on the financial statements, but not for the purpose of expressing an opinion on the effectiveness of the internal control of the Village of Palm Springs, Florida. Accordingly, we do not express an opinion on the effectiveness of the internal control of the Village of Palm Springs, Florida.

A *deficiency in internal control* exists when the design or operation of a control does not allow management or employees, in the normal course of performing their assigned functions, to prevent, or detect and correct misstatements on a timely basis. A *material weakness* is a deficiency, or a combination of deficiencies, in internal control such that there is a reasonable possibility that a material misstatement of the entity's financial statements will not be prevented, or detected and corrected, on a timely basis. A *significant deficiency* is a deficiency, or a combination of deficiencies, in internal control that is less severe than a material weakness, yet important enough to merit attention by those charged with governance.

Our consideration of internal control was for the limited purpose described in the first paragraph of this section and was not designed to identify all deficiencies in internal control that might be material weaknesses or, significant deficiencies. Given these limitations, during our audit we did not identify any deficiencies in internal control that we consider to be material weaknesses. However, material weaknesses may exist that have not been identified.

**Compliance and Other Matters**

As part of obtaining reasonable assurance about whether the financial statements of the Village of Palm Springs, Florida, are free from material misstatement, we performed tests of its compliance with certain provisions of laws, regulations, contracts, and grant agreements, noncompliance with which could have a direct and material effect on the financial statements. However, providing an opinion on compliance with those provisions was not an objective of our audit, and accordingly, we do not express such an opinion. The results of our tests disclosed no instances of noncompliance or other matters that are required to be reported under *Government Auditing Standards*.

**Purpose of this Report**

The purpose of this report is solely to describe the scope of our testing of internal control and compliance and the results of that testing, and not to provide an opinion on the effectiveness of the entity's internal control or on compliance. This report is an integral part of an audit performed in accordance with *Government Auditing Standards* in considering the entity's internal control and compliance. Accordingly, this communication is not suitable for any other purpose.

Caler, Donten, Levine,
Cohen, Porter & Veil, P.A.

West Palm Beach, Florida
April 26, 2021

## VILLAGE OF PALM SPRINGS, FLORIDA

*Schedule of Expenditures of Federal Awards*
*Year Ended September 30, 2020*

| Grantor/Pass-Through Grantor/ Program Title | Federal CFDA Number | Grant Number/ Pass-through Entity Identifying Number | 2020 Program Expenditures |
|---|---|---|---|
| **FEDERAL AWARDS** | | | |
| **U.S. Department of Housing and Urban Development** | | | |
| Pass-through Awards from Palm Beach County, Florida | | | |
| Community Development Block Grants/Entitlement Grants | 14.218 | R-2018-1569 | $ 397,100 |
| Community Development Block Grants/Entitlement Grants | 14.218 | R-2019-1762 | 300,488 |
| Total U.S. Department of Housing and Urban Development | | | 697,588 |
| **U.S. Department of Justice** | | | |
| Direct Award | | | |
| Bulletproof Vest Partnership Program | 16.607 | 2019-LEBG-PALM-12L4-113 | 953 |
| Pass-through Award from the State of Florida | | | |
| Florida Department of Law Enforcement | | | |
| Edward Byrne Memorial Justice Assistance Grant Program | 16.738 | 2018-MU-BX-0292 | 8,882 |
| Total U.S. Department of Justice | | | 9,835 |
| **Department of Homeland Security - Federal Emergency Management Agency (FEMA)** | | | |
| Pass-through Award from the State of Florida | | | |
| Florida Division of Emergency Management (FDEM) | | | |
| Disaster Grants - Public Assistance (Presidentially Declared Disasters) - Hurricane Irma | 97.036 | Z0716/FEMA-DR-4337-FL | 124,203 |
| Disaster Grants - Public Assistance (Presidentially Declared Disasters) - Hurricane Dorian | 97.036 | Z1575/FEMA-DR-4468-FL | 36,828 |
| Hazard Mitigation Grant Program | 97.039 | FEMA-DR-4283-28-R | 6,902 |
| Total Department of Homeland Security | | | 167,933 |
| **Total Federal Awards** | | | $ 875,356 |

See notes to schedule of expenditures of federal awards.

# VILLAGE OF PALM SPRINGS, FLORIDA

NOTES TO SCHEDULE OF EXPENDITURES OF FEDERAL AWARDS

September 30, 2020

## NOTE 1. BASIS OF PRESENTATION

The accompanying Schedule of Expenditures of Federal Awards (the "Schedule") includes the Federal grant activity of the Village of Palm Springs Florida (the "Village"), under programs of the Federal government for the year ended September 30, 2020. The information in the Schedule is presented in accordance with the requirements of Title 2 U.S. *Code of Federal Regulations* (CFR) Part 200, *Uniform Administrative Requirements, Cost Principles, and Audit Requirements for Federal Awards* (Uniform Guidance). Because the Schedule presents only a selected portion of the operations of the Village, it is not intended to and does not present the financial position or changes in net position, or cash flows of the Village. Expenditures of State financial assistance for the year ended September 30, 2020 did not exceed the $750,000 threshold for a State Single Audit.

## NOTE 2. SUMMARY OF SIGNIFICANT ACCOUNTING POLICIES

**a.** Expenditures reported on the Schedule are reported on the modified accrual basis of accounting. Such expenditures are recognized following the cost principles contained in the Uniform Guidance, wherein certain types of expenditures are not allowable or are limited as to reimbursement. Expenditures relating to U.S. Department of Homeland Security, Federal Emergency Management Agency ("FEMA"), CFDA 97.036 Disaster Grants – Public Assistance (Hurricane Irma and Hurricane Dorian) are reported when 1) FEMA has approved the project worksheet, and 2) eligible expenditures have been incurred in accordance with FEMA regulations (See Note 4).

**b.** Pass-through entity identifying numbers were not available for pass-through awards listed in the Schedule for the year ended September 30, 2020.

**c.** The Village made no payments to subrecipients from Federal awards for the year ended September 30, 2020.

## NOTE 3. INDIRECT COST RATE

The Village did not elect to use the 10% de minimus indirect cost rate as allowed under the Uniform Guidance.

## NOTE 4. EXPENDITURES INCURRED IN PRIOR YEARS

Amounts reported in the Schedule of Expenditures of Federal Awards for U.S. Department of Homeland Security, Federal Emergency Management Agency, CFDA 97.036 Disaster Grants - Public Assistance (Presidentially Declared Disasters) - Hurricane Irma and Hurricane Dorian includes expenditures of $161,031 incurred in a prior year.

## NOTE 5. CONTINGENCY

Amounts received or receivable from grantor agencies are subject to audit and adjustment by those agencies. Any disallowed claims, including amounts already received, might constitute a liability of the Village for the return of those funds. In the opinion of management, all grant expenditures were in substantial compliance with the terms of the grant agreements and applicable Federal statutes and regulations.

CALER, DONTEN, LEVINE,
COHEN, PORTER & VEIL, P.A.

CERTIFIED PUBLIC ACCOUNTANTS

WILLIAM K CALER, JR , CPA
LAURA E CLARK, CPA
LOUIS M COHEN, CPA
JOHN C COURTNEY, CPA, JD
DAVID S DONTEN, CPA
JAMES B HUTCHISON, CPA
JOEL H LEVINE, CPA
PATRICK E MANGAN, CPA
JAMES F MULLEN, IV, CPA
MICHAEL J NALEZYTY, CPA
THOMAS A PENCE, JR , CPA
SCOTT L PORTER, CPA
MARK D VEIL, CPA
MARTIN R WOODS, CPA

505 SOUTH FLAGLER DRIVE, SUITE 900
WEST PALM BEACH, FL 33401-5948
TELEPHONE: (561) 832-9292

759 SW FEDERAL HIGHWAY, SUITE 301
STUART, FL 34994-1019
TELEPHONE: (772) 872-2123

info@cdlcpa com

MEMBERS
AMERICAN INSTITUTE OF
CERTIFIED PUBLIC ACCOUNTANTS

FLORIDA INSTITUTE OF
CERTIFIED PUBLIC ACCOUNTANTS

# Independent Auditor's Report on Compliance for Each Major Federal Program and on Internal Control Over Compliance Required by the Uniform Guidance

To the Honorable Mayor and
Village Council
Village of Palm Springs, Florida

## Report on Compliance for Each Major Federal Program

We have audited the compliance of the Village of Palm Springs, Florida (the "Village"), with the types of compliance requirements described in the *OMB Compliance Supplement* that could have a direct and material effect on each of the Village's major Federal programs for the year ended September 30, 2020. The Village's major Federal programs are identified in the summary of auditor's results section of the accompanying Schedule of Findings and Questioned Costs.

### *Management's Responsibility*

Management is responsible for compliance with Federal statutes, regulations, and the terms and conditions of its Federal awards applicable to its Federal programs.

### *Auditor's Responsibility*

Our responsibility is to express an opinion on compliance for each of the Village's major Federal programs based on our audit of the types of compliance requirements referred to above. We conducted our audit of compliance in accordance with U.S. generally accepted auditing standards; the standards applicable to financial audits contained in *Government Auditing Standards*, issued by the Comptroller General of the United States; and the audit requirements of Title 2 U.S. *Code of Federal Regulations* Part 200, *Uniform Administrative Requirements, Cost Principles, and Audit Requirements for Federal Awards* (Uniform Guidance). Those standards and the Uniform Guidance require that we plan and perform the audit to obtain reasonable assurance about whether noncompliance with the types of compliance requirements referred to above that could have a direct and material effect on a major Federal program occurred. An audit includes examining, on a test basis, evidence about the Village's compliance with those requirements and performing such other procedures as we considered necessary in the circumstances.

We believe that our audit provides a reasonable basis for our opinion on compliance for each major Federal program. However, our audit does not provide a legal determination of the Village's compliance.

***Opinion on Each Major Federal Program***

In our opinion, the Village complied, in all material respects, with the types of compliance requirements referred to above that could have a direct and material effect on each of its major Federal programs for the year ended September 30, 2020.

**Report on Internal Control Over Compliance**

Management of the Village of Palm Springs, Florida, is responsible for establishing and maintaining effective internal control over compliance with the types of compliance requirements referred to above. In planning and performing our audit of compliance, we considered the Village's internal control over compliance with the types of requirements that could have a direct and material effect on each major Federal program to determine the auditing procedures that are appropriate in the circumstances for the purpose of expressing an opinion on compliance for each major Federal program and to test and report on internal control over compliance in accordance with the Uniform Guidance, but not for the purpose of expressing an opinion on the effectiveness of internal control over compliance. Accordingly, we do not express an opinion on the effectiveness of the Village's internal control over compliance.

A *deficiency in internal control over compliance* exists when the design or operation of a control over compliance does not allow management or employees, in the normal course of performing their assigned functions, to prevent, or detect and correct, noncompliance with a type of compliance requirement of a Federal program on a timely basis. A *material weakness in internal control over compliance* is a deficiency, or combination of deficiencies, in internal control over compliance, such that there is a reasonable possibility that material noncompliance with a type of compliance requirement of a Federal program will not be prevented, or detected and corrected, on a timely basis. A *significant deficiency in internal control over compliance* is a deficiency, or a combination of deficiencies, in internal control over compliance with a type of compliance requirement of a Federal program that is less severe than a material weakness in internal control over compliance, yet important enough to merit attention by those charged with governance.

Our consideration of internal control over compliance was for the limited purpose described in the first paragraph of this section and was not designed to identify all deficiencies in internal control over compliance that might be material weaknesses or significant deficiencies. We did not identify any deficiencies in internal control over compliance that we consider to be material weaknesses. However, material weaknesses may exist that have not been identified.

The purpose of this report on internal control over compliance is solely to describe the scope of our testing of internal control over compliance and the results of that testing based on the requirements of the Uniform Guidance. Accordingly, this report is not suitable for any other purpose.

Caler, Donten, Levine,
Cohen, Porter & Veil, P.A.

West Palm Beach, Florida
April 26, 2021

# VILLAGE OF PALM SPRINGS, FLORIDA

SCHEDULE OF FINDINGS AND QUESTIONED COSTS –
FEDERAL AWARD PROGRAMS

Year Ended September 30, 2020

## SECTION I – SUMMARY OF AUDITOR'S RESULTS

***Financial Statements***

| | |
|---|---|
| Type of auditor's report issued: | *Unmodified Opinion* |
| Internal control over financial reporting: | |
| Material weakness(es) identified? | ____ Yes __X__ No |
| Significant deficiency (ies) identified that are not considered to be material weakness? | ____ Yes __X__ None reported |
| Noncompliance material to financial statements noted? | ____ Yes __X__ No |

***Federal Award Programs***

| | |
|---|---|
| Internal control over major Federal Award Programs: | |
| Material weakness(es) identified? | ____ Yes __X__ No |
| Significant deficiency (ies) identified that are not considered to be material weakness? | ____ Yes __X__ None reported |
| Type of auditor's report issued on compliance for major Federal Programs | *Unmodified Opinion* |
| Any audit findings disclosed that are required to be reported in accordance with 2 CFR 200.516(a)? | ____ Yes __X__ No |

***Identification of Major Federal Award Programs***

| **Federal Award Programs** | **CFDA No.** |
|---|---|
| U.S. Department of Housing and Urban Development | |
| Pass-through Awards from Palm Beach County, Florida | |
| Community Development Block Grants/Entitlement Grants | 14.218 |
| Dollar threshold used to distinguish between Type A and Type B programs: | $ 750,000 |
| Auditee qualified as low-risk auditee? | ____ Yes __X__ No |

## SECTION II - FINANCIAL STATEMENT FINDINGS

None

## SECTION III – FEDERAL AWARD PROGRAMS FINDINGS AND QUESTIONED COSTS

None

**SECTION IV – OTHER MATTERS**

A Corrective Action Plan is not required because there were no audit findings reported.

A Summary Schedule of Prior Audit Findings is not required because there were no prior audit findings reported.

CALER, DONTEN, LEVINE,
COHEN, PORTER & VEIL, P.A.

CERTIFIED PUBLIC ACCOUNTANTS

WILLIAM K CALER, JR , CPA
LAURA E CLARK, CPA
LOUIS M COHEN, CPA
JOHN C COURTNEY, CPA, JD
DAVID S DONTEN, CPA
JAMES B HUTCHISON, CPA
JOEL H LEVINE, CPA
PATRICK E MANGAN, CPA
JAMES F MULLEN, IV, CPA
MICHAEL J NALEZYTY, CPA
THOMAS A PENCE, JR , CPA
SCOTT L PORTER, CPA
MARK D VEIL, CPA
MARTIN R WOODS, CPA

505 SOUTH FLAGLER DRIVE, SUITE 900
WEST PALM BEACH, FL 33401-5948
TELEPHONE: (561) 832-9292

759 SW FEDERAL HIGHWAY, SUITE 301
STUART, FL 34994-1019
TELEPHONE: (772) 872-2123

info@cdlcpa com

MEMBERS
AMERICAN INSTITUTE OF
CERTIFIED PUBLIC ACCOUNTANTS

FLORIDA INSTITUTE OF
CERTIFIED PUBLIC ACCOUNTANTS

# Management Letter

The Honorable Mayor and
Village Council
Village of Palm Springs, Florida

**Report on the Financial Statements**

We have audited the financial statements of the Village of Palm Springs, Florida, as of and for the year ended September 30, 2020, and have issued our report thereon dated April 26, 2021.

**Auditor's Responsibility**

We conducted our audit in accordance with U.S. generally accepted auditing standards; the standards applicable to financial audits contained in *Government Auditing Standards*, issued by the Comptroller General of the United States; the audit requirements of Title 2 U.S. *Code of Federal Regulations* Part 200, *Uniform Administrative Requirements, Cost Principles, and Audit Requirements for Federal Awards* (Uniform Guidance); and Chapter 10.550, Rules of the Auditor General.

**Other Reporting Requirements**

We have issued our Independent Auditor's Report on Internal Control Over Financial Reporting and on Compliance and Other Matters Based on an Audit of Financial Statements Performed in Accordance with *Government Auditing Standards*; Independent Auditor's Report on Compliance for Each Major Federal Program and Report on Internal Control over Compliance Required by the Uniform Guidance; Schedule of Findings and Questioned Costs; and Independent Accountant's Report on Investment Compliance on an examination conducted in accordance with *AICPA Professional Standards*, AT-C Section 315, regarding compliance requirements in accordance with Chapter 10.550, Rules of the Auditor General. Disclosures in those reports and schedule, which are dated April 26, 2021, should be considered in conjunction with this management letter.

**Prior Audit Findings**

Section 10.554(1)(i)1., Rules of the Auditor General, requires that we determine whether or not corrective actions have been taken to address findings and recommendations made in the preceding annual financial audit report. There were no prior audit findings.

**Official Title and Legal Authority**

Section 10.554(1)(i)4., Rules of the Auditor General, requires that the name or official title and legal authority for the primary government and each component unit of the reporting entity be disclosed in this management letter, unless disclosed in the notes to the financial statements. This information is disclosed in Note 1 to the financial statements. Also, as discussed in Note 1, the Village included the Palm Springs Community Redevelopment Agency as a component unit of the Village.

**Financial Condition and Management**

Sections 10.554(1)(i)5.a. and 10.556(7), Rules of the Auditor General, require us to apply appropriate procedures and communicate the results of our determination as to whether or not the Village met one or more of the conditions described in Section 218.503(1), Florida Statutes, and to identify the specific condition(s) met. In connection with our audit, we determined that the Village did not meet any of the conditions described in Section 218.503(1), Florida Statutes, as of and for the year ended September 30, 2020.

Pursuant to Sections 10.554(1)(i)5.b. and 10.556(8), Rules of the Auditor General, we applied financial condition assessment procedures for the Village. It is management's responsibility to monitor the Village's financial condition, and our financial condition assessment was based in part on representations made by management and review of financial information provided by the Village. The results of our procedures disclosed no matters that are required to be reported.

Section 10.554(1)(i)2., Rules of the Auditor General, requires that we communicate any recommendations to improve financial management. In connection with our audit, we did not have any such recommendations.

**Special District Component Units**

Section 10.554(1)(i)5.c., Rules of the Auditor General, requires, if appropriate, that we communicate the failure of a special district that is a component unit of a county, municipality, or special district, to provide the financial information necessary for proper reporting of the component unit within the audited financial statements of the county, municipality, or special district in accordance with Section 218.39(3)(b), Florida Statutes. In connection with our audit, we did not note any special district component units that failed to provide the necessary information for proper reporting in accordance with Section 218.39(3)(b), Florida Statutes.

**Additional Matters**

Section 10.554(1)(i)3., Rules of the Auditor General, requires us to communicate noncompliance with provisions of contracts or grant agreements, or abuse, that have occurred, or are likely to have occurred, that have an effect on the financial statements that is less than material but warrants the attention of those charged with governance. In connection with our audit, we did not note any such findings.

**Purpose of this Letter**

Our management letter is intended solely for the information and use of the Legislative Auditing Committee, members of the Florida Senate and Florida House of Representatives, the Florida Auditor General, Federal and other granting agencies and the Village Council and management of the Village of Palm Springs, Florida, and is not intended to be and should not be used by anyone other than these specified parties.

Caler, Donten, Levine,
Cohen, Porter & Veil, P.A.

West Palm Beach, Florida
April 26, 2021

CALER, DONTEN, LEVINE,
COHEN, PORTER & VEIL, P.A.

CERTIFIED PUBLIC ACCOUNTANTS

WILLIAM K CALER, JR , CPA
LAURA E CLARK, CPA
LOUIS M COHEN, CPA
JOHN C COURTNEY, CPA, JD
DAVID S DONTEN, CPA
JAMES B HUTCHISON, CPA
JOEL H LEVINE, CPA
PATRICK E MANGAN, CPA
JAMES F MULLEN, IV, CPA
MICHAEL J NALEZYTY, CPA
THOMAS A PENCE, JR , CPA
SCOTT L PORTER, CPA
MARK D VEIL, CPA
MARTIN R WOODS, CPA

505 SOUTH FLAGLER DRIVE, SUITE 900
WEST PALM BEACH, FL 33401-5948
TELEPHONE: (561) 832-9292

759 SW FEDERAL HIGHWAY, SUITE 301
STUART, FL 34994-1019
TELEPHONE: (772) 872-2123

info@cdlcpa com

MEMBERS
AMERICAN INSTITUTE OF
CERTIFIED PUBLIC ACCOUNTANTS

FLORIDA INSTITUTE OF
CERTIFIED PUBLIC ACCOUNTANTS

# Independent Accountant's Report on Investment Compliance

The Honorable Mayor and
Village Council
Village of Palm Springs, Florida

We have examined the Village of Palm Springs' compliance with Section 218.415, Florida Statutes, during the year ended September 30, 2020. Management of the Village of Palm Springs, Florida, (the "Village") is responsible for the Village's compliance with the specified requirements. Our responsibility is to express an opinion on the Village's compliance with the specified requirements based on our examination.

Our examination was conducted in accordance with attestation standards established by the American Institute of Certified Public Accountants. Those standards require that we plan and perform the examination to obtain reasonable assurance about whether the Village complied, in all material respects, with the specified requirements referenced above. An examination involves performing procedures to obtain evidence about whether the Village complied with the specified requirements. The nature, timing, and extent of the procedures selected depend on our judgment, including an assessment of the risks of material noncompliance, whether due to fraud or error. We believe that the evidence we obtained is sufficient and appropriate to provide a reasonable basis for our opinion.

Our examination does not provide a legal determination on the Village's compliance with the specified requirements.

In our opinion, the Village of Palm Springs, Florida, complied, in all material respects, with Section 218.415, Florida Statutes, during the year ended September 30, 2020.

This report is intended to describe our testing of compliance with Section 218.415, Florida Statutes, and is not suitable for any other purpose.

Caler, Donten, Levine,
Cohen, Porter & Veil, P.A.

West Palm Beach, Florida
April 26, 2021

## PRINCIPAL OFFICIALS

*(At September 30, 2020)*

**Bev O. Smith**
*Mayor*

**Patti Waller**
*Vice Mayor*

**Gary Ready**
*Mayor ProTem*

**Joni Brinkman**
*Council Member*

**Doug Gunther**
*Council Member*

**Richard J. Reade**
*Village Manager*

**Rebecca L. Morse**
*Chief Financial Officer*

**We appreciate the opportunity to serve The Village of Palm Springs.**

***Should you have a question on the Village's Audited Financial Statements or any other matters, please feel free to call me directly at 832-9292.***

***Scott Porter***
***Audit Partner***

DRAFT

The information presented has been derived from the Village's Financial Statements and information provided by the Village. It is not intended to be a complete financial report under U.S. generally accepted accounting principles.

**CALER, DONTEN, LEVINE, COHEN, PORTER & VEIL, P.A.**

# VILLAGE OF PALM SPRINGS, FLORIDA

## *FINANCIAL HIGHLIGHTS*

**For the Year Ended September 30, 2020**

# Revenue and Expenditures

## Revenue

The following graph presents General Fund revenues of the Village by source for the last five (5) years.

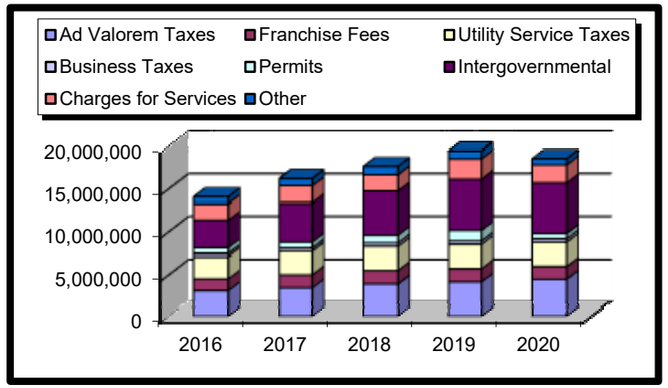


- Total General Fund revenues for the year ended September 30, 2020, were $18.6 million. This represents a decrease of $910,000, or 4.7%, when compared with the prior year.
- Total General Fund revenues have increased approximately $4.5 million, or 32.2%, since 2016. Increases in ad valorem taxes ($1,365,000), franchise fees ($119,000), utility service taxes ($200,000), business taxes ($51,000), intergovernmental ($2,656,000), and charges for services ($228,000), combined with decreases in permits ($49,000) and other revenues ($45,000), account for the overall increase in total revenues.
- The new local option sales tax for infrastructure improvements accounted for $1,620,000 of General Fund intergovernmental revenues for 2020.
- The assessed value of real and personal property was $1,325 million, an increase of $104 million (8.8%) over the prior year and an increase of $504 million (61.3%) since 2016.
- The General Fund millage rate adopted for the 2019/2020 fiscal year (3.50) has decreased 10.3% since 2016. The debt service millage rate decreased from .5484 in 2016 to .3381 in 2020.

## Expenditures

The following graph presents General Fund expenditures of the Village by function for the last five (5) years.

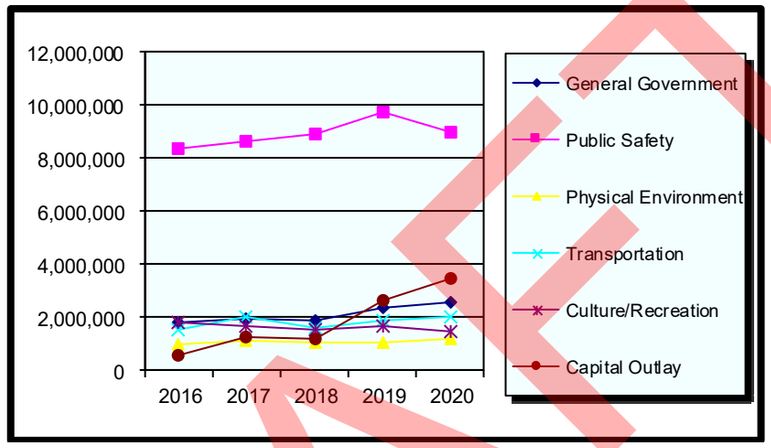


- Total General Fund expenditures for the year ended September 30, 2020, were approximately $19.8 million. This represents an increase of approximately $404,000, or 2.1%, when compared with 2019.
- Expenditures for all functions over the last five years have generally increased at an average annual rate of approximately 7.3%, compared to an average annual increase in the Village population of approximately 1.3%.
- Expenditures for debt service principal and interest were $430,916 or 2.1% of total governmental expenditures for 2020, which was slightly lower than the prior year total of $432,461 or 2.2%.

## Fund Balance

The following graph presents the trend in assigned and unassigned fund balance of the General Fund for the last five years.

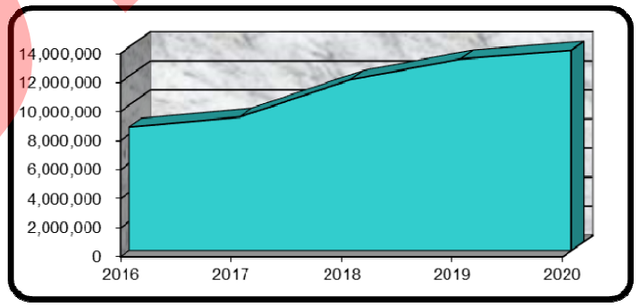


- Assigned and unassigned fund balance at September 30, 2020, was $13,778,194, including $3,000,000 assigned to disaster recovery, $1,500,000 assigned to capital projects, and $1,183,000 assigned to the 2021 budget.
- Unassigned fund balance was $8,095,194 and represents 40.9% of the 2020 actual expenditures (32.5% for 2019), or approximately 149 days of working capital (119 days in 2019).
- Unassigned fund balance increased by $1,787,601 in 2020 or 28.3% from the prior year unassigned fund balance.

## Water and Sewer Operations

Operations of the water and sewer facilities are presented on a budgetary cash flow basis, which is operating income without depreciation or amortization, but after payment of debt service. The graph provided below compares water and sewer operations over the last five years.

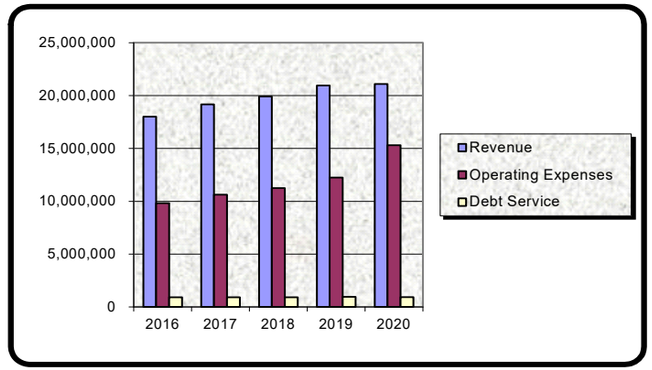


- The net revenues of the water and sewer utility have consistently exceeded the required debt service by more than three times. Debt service coverage was 9.7 for 2020.
- Operating income was approximately $5.8 million for 2020 as compared to $5.9 million for 2019.
- The net cash provided by operations was approximately $8.9 million for 2020, as compared to $8.9 million for 2019.
- The utility received approximately $134,000 for new connections in 2020, a decrease of approximately $598,000.
- The investment in capital facilities was approximately $2.6 million in 2020, a decrease of approximately $775,000. The investment in capital facilities was financed by the net revenues of the utility system and capital contributions.

DRAFT

CALER, DONTEN, LEVINE,
COHEN, PORTER & VEIL, P.A.

CERTIFIED PUBLIC ACCOUNTANTS

WILLIAM K CALER, JR , CPA
LAURA E CLARK, CPA
LOUIS M COHEN, CPA
JOHN C COURTNEY, CPA, JD
DAVID S DONTEN, CPA
JAMES B HUTCHISON, CPA
JOEL H LEVINE, CPA
PATRICK E MANGAN, CPA
JAMES F MULLEN, IV, CPA
MICHAEL J NALEZYTY, CPA
THOMAS A PENCE, JR , CPA
SCOTT L PORTER, CPA
MARK D VEIL, CPA
MARTIN R WOODS, CPA

505 SOUTH FLAGLER DRIVE, SUITE 900
WEST PALM BEACH, FL 33401-5948
TELEPHONE: (561) 832-9292

759 SW FEDERAL HIGHWAY, SUITE 301
STUART, FL 34994-1019
TELEPHONE: (772) 872-2123

info@cdlcpa com

MEMBERS
AMERICAN INSTITUTE OF
CERTIFIED PUBLIC ACCOUNTANTS

FLORIDA INSTITUTE OF
CERTIFIED PUBLIC ACCOUNTANTS

Communication With Those Charged With Governance

The Honorable Mayor and Members
of the Village Council
Village of Palm Springs
Palm Springs, Florida

We have audited the financial statements of the governmental activities, the business-type activities, each major fund and the aggregate remaining fund information of the Village of Palm Springs, Florida, for the year ended September 30, 2020. Professional standards require that we provide you with information about our responsibilities under U.S. generally accepted auditing standards, the standards applicable to financial audits contained in *Government Auditing Standards*, issued by the Comptroller General of the United States, Title 2 U.S. *Code of Federal Regulations* Part 200, *Uniform Administrative Requirements, Cost Principles, and Audit Requirements for Federal Awards* (the "Uniform Guidance"), and Chapter 10.550, Rules of the Auditor General, as well as certain information related to the planned scope and timing of our audit. We have communicated such information to you in our engagement letter dated June 10, 2020. Professional standards also require that we communicate to you the following information related to our audit.

**Significant Audit Matters**

*Qualitative Aspects of Accounting Practices*

Management is responsible for the selection and use of appropriate accounting policies. The significant accounting policies used by the Village of Palm Springs, Florida, are described in Note 1 to the financial statements. There were no new pronouncements of the Governmental Accounting Standards Board (GASB) adopted by the Village for the fiscal year ended September 30, 2020. We noted no transactions entered into by the Village during the year for which there is a lack of authoritative guidance or consensus. All significant transactions have been recognized in the financial statements in the proper period.

Accounting estimates are an integral part of the financial statements prepared by management and are based on management's knowledge and experience about past and current events and assumptions about future events. Certain accounting estimates are particularly sensitive because of their significance to the financial statements and because of the possibility that future events affecting them may differ significantly from those expected. The most sensitive estimates affecting the Village's financial statements were:

- Management's estimate of the fair value of investments at September 30, 2020. We evaluated the key factors and assumptions used to estimate the fair value of investments and related investment earnings in determining that the amounts are reasonable in relation to the financial statements as a whole.

- Management's estimate of the net realizable value of accounts receivable at September 30, 2020. We evaluated the key factors and assumptions used to estimate the net realizable value of receivables and the related allowance for doubtful accounts in determining that the amounts are reasonable in relation to the financial statements as a whole.
- Management's estimate of the remaining service lives of capital assets at September 30, 2020. We evaluated the key factors and assumptions used to estimate the useful service lives and related depreciation expense in determining that the amounts are reasonable in relation to the financial statements as a whole.
- Management's estimate of the net pension liability, deferred inflows/outflows related to pensions and pension expense as of and for the year ended September 30, 2020. We evaluated the key factors and assumptions used to estimate the Village's net pension liability, deferred inflows/outflows related to pensions and pension expense in determining the amounts are reasonable in relation to the financial statements as a whole. We read and compared these estimates to the actuarial reports provided by the Village's actuary in determining that the amounts are reasonable in relation to the financial statements as a whole.
- Management's estimate of the other postemployment benefits (OPEB) liability, deferred inflows/outflows related to OPEB and OPEB expense as of and for the year ended September 30, 2020. We evaluated the key factors and assumptions used to estimate the Village's total OPEB liability, deferred inflows/outflows related to OPEB and OPEB expense. We read and compared these estimates to the actuarial report provided by the Village's actuary in determining that the amounts are reasonable in relation to the financial statements as a whole.

Certain financial statement disclosures are particularly sensitive because of their significance to financial statement users. The most sensitive disclosures affecting the financial statements were:

- The disclosures related to deposits and investments in Note 2 to the financial statements.
- The disclosures related to the Village's long-term debt in Note 5 to the financial statements.
- The disclosures related to the Village's employee retirement plans in Note 9 to the financial statements.
- The disclosures related to the Village's other postemployment benefits (OPEB) plan in Note 10 to the financial statements.
- The disclosures related to commitments and contingencies in Note 11 to the financial statements.

The disclosures in the financial statements are neutral, consistent, and clear.

*Difficulties Encountered in Performing the Audit*

We encountered no difficulties in performing and completing our audit.

*Corrected and Uncorrected Misstatements*

Professional standards require us to accumulate all known and likely misstatements identified during the audit, other than those that are clearly trivial, and communicate them to the appropriate level of management. The attached summary of unadjusted audit differences summarizes the uncorrected misstatements of the financial statements. Management has determined that the effects are immaterial, both individually and in the aggregate, to the financial statements taken as a whole. In addition, none of the misstatements detected as a result of audit procedures and corrected by management were material, either individually or in the aggregate, to each opinion unit's financial statements taken as a whole.

*Disagreements with Management*

For purposes of this letter, a disagreement with management is a financial accounting, reporting, or auditing matter, whether or not resolved to our satisfaction that could be significant to the financial statements or the auditor's report. We are pleased to report that no such disagreements arose during the course of our audit.

*Management Representations*

We have requested certain representations from management that are included in the management representation letter dated April 26, 2021.

*Management Consultations with other Independent Accountants*

In some cases, management may decide to consult with other accountants about auditing and accounting matters, similar to obtaining a "second opinion" on certain situations. If a consultation involves application of an accounting principle to the Village's financial statements or a determination of the type of auditor's opinion that may be expressed on those statements, our professional standards require the consulting accountant to check with us to determine that the consultant has all the relevant facts. To our knowledge, there were no such consultations with other accountants.

*Internal Control Related Matters*

In planning and performing our audit, we considered the internal control over financial reporting (internal control) of the Village as a basis for designing our auditing procedures for the purpose of expressing our opinion on the financial statements, but not for the purpose of expressing an opinion on the effectiveness of the Village's internal control. Accordingly, we did not express an opinion on the effectiveness of the Village's internal control.

Our consideration of the Village's internal control was for the limited purpose described in the preceding paragraph and would not necessarily identify all deficiencies in internal control that might be significant deficiencies or material weaknesses. We did not identify any deficiencies in internal control that we consider to be material weaknesses.

In planning and performing our audit of the Village's compliance with the types of compliance requirements described in the *OMB Compliance Supplement* that are applicable to each of the Village's major Federal programs, we considered the Village's internal control over compliance with the types of requirements that could have a direct and material effect on each major Federal program to determine the auditing procedures that are appropriate in the circumstances for the purpose of expressing an opinion on compliance for each major Federal program and to test and report on internal control over compliance in accordance with the Uniform Guidance, but not for the purpose of expressing an opinion on the effectiveness of internal control over compliance. Accordingly, we did not express an opinion on the effectiveness of the Village's internal control over compliance.

Our consideration of internal control over compliance was for the limited purpose described in the preceding paragraph and was not designed to identify all deficiencies in internal control over compliance that might be material weaknesses or significant deficiencies and therefore, material weaknesses or significant deficiencies may exist that have not been identified. Given these limitations, during our audit we did not identify any deficiencies in internal control over compliance that we consider to be material weaknesses.

*Compliance Related Matters*

As part of obtaining reasonable assurance about whether the Village's financial statements are free of material misstatement, we performed tests of its compliance with certain provisions of laws, regulations, contracts, and grant agreements, noncompliance with which could have a direct and material effect on the determination of financial statement amounts. However, providing an opinion on compliance with those provisions was not an objective of our audit, and accordingly, we did not express such an opinion. The results of our tests disclosed no instances of noncompliance or other matters that are required to be reported under *Government Auditing Standards*.

We also audited the compliance of the Village with the types of compliance requirements described in the *OMB Compliance Supplement* that are applicable to each of the Village's major Federal programs for the year ended September 30, 2020. The results of our auditing procedures disclosed no instances of noncompliance which are required to be reported in accordance with the Uniform Guidance.

*Other Audit Findings or Issues*

We generally discuss a variety of matters, including the application of accounting principles and auditing standards, with management each year prior to retention as the Village's auditors. However, these discussions occurred in the normal course of our professional relationship and our responses were not a condition to our retention.

**Other Matters**

*Other Information Included in the Comprehensive Annual Financial Report (CAFR)*

We applied certain limited procedures to management's discussion and analysis, the budgetary comparison information, the condition rating of the Village's street system and certain pension and OPEB related information, which are required supplementary information (RSI) that supplements the basic financial statements. Our procedures consisted of inquiries of management regarding the methods of preparing the information and comparing the information for consistency with management's responses to our inquiries, the basic financial statements, and other knowledge we obtained during our audit of the basic financial statements. We did not audit the RSI and do not express an opinion or provide any assurance on the RSI.

We were engaged to report on the combining fund financial statements, debt schedules and the Schedule of Expenditures of Federal Awards, which accompany the financial statements but are not RSI. With respect to this supplementary information, we made certain inquiries of management and evaluated the form, content, and methods of preparing the information to determine that the information complies with U.S. generally accepted accounting principles, the method of preparing it has not changed from the prior period, and the information is appropriate and complete in relation to our audit of the financial statements. We compared and reconciled the supplementary information to the underlying accounting records used to prepare the financial statements or to the financial statements themselves. In our opinion, the combining fund financial statements, debt schedules and the Schedule of Expenditures of Federal Awards, are fairly stated in all material respects in relation to the financial statements as a whole.

We were not engaged to report on the introductory section and statistical section, which accompany the financial statements but are not RSI. Such information has not been subjected to the auditing procedures applied in the audit of the basic financial statements, and accordingly, we do not express an opinion or provide any assurance on it.

The Honorable Mayor and Members
of the Village Council
Village of Palm Springs

**Restriction on Use**

This report is intended solely for the information and use of the Village Council and management of the Village of Palm Springs, Florida, and is not intended to be and should not be used by anyone other than these specified parties.

Caler, Donten, Levine,
Cohen, Porter & Veil, P.A.

West Palm Beach, Florida
April 26, 2021

## Summary of Unadjusted Audit Differences

**Client:** Village of Palm Springs, Florida
**Audit date:** September 30, 2020

| | | | Analysis of audit differences Debit/(Credit) | | | | | | | | | | | |
|---|---|---|---|---|---|---|---|---|---|---|---|---|---|---|
| | | | Assets and Deferred Outflows - Governmental | | Assets and Deferred Outflows - Business-type | Liabilities and Deferred Inflows - Governmental | | Liabilities and Deferred Inflows Business-type | Income/Expenses | | | Fund Balance | Net Position | |
| No. | W/P ref. | Account (Audit differences are recorded as journal entries including a description of the entry) | Govt-Wide Debit/(Credit) | Fund Basis Debit/(Credit) | Debit/(Credit) | Govt-Wide Debit/(Credit) | Fund Basis Debit/(Credit) | Debit/(Credit) | Govt-Wide Debit/(Credit) | Fund Basis Debit/(Credit) | Business-type Debit/(Credit) | Fund Basis Debit/(Credit) | Govt-Wide Debit/(Credit) | Bus-Type Debit/(Credit) |
| **Unrecorded Audit Differences:** | | | | | | | | | | | | | | |
| 1 | 23.06 | Deferred loss on refunding | 39,922 | | | | | | | | | | | |
| | | Beginning net position | | | | | | | | | | | (15,944) | |
| | | Accumulated amortization on refunding loss | (23,978) | | | | | | | | | | | |
| | | Interest expense / Amortization expense | | | | | | | 3,233 | | | | | |
| | | Accumulated amortization on refunding loss | (3,233) | | | | | | | | | | | |
| | | *To record deferred loss on advance refunding of the FMLC 2002A Revenue Bonds by 2012 Note Payable.* | | | | | | | | | | | | |
| | **Balance sheet totals** | | 12,711 | 0 | 0 | 0 | 0 | 0 | 3,233 | 0 | 0 | 0 | (15,944) | 0 |
| | **Financial statement amounts** | | 43,128,487 | 19,450,289 | 86,279,661 | (18,719,233) | (1,125,058) | (16,055,096) | | | | (18,325,231) | (24,409,254) | (70,224,565) |
| **Effect of unrecorded audit differences on F/S amounts** | | | **0.03%** | **0.00%** | **0.00%** | **0.00%** | **0.00%** | **0.00%** | | | | **0.00%** | **0.07%** | **0.00%** |
| **Income effect of unrecorded audit differences** | | | | | | | | | 3,233 | 0 | 0 | | | |
| **Cumulative effect of unrecorded audit differences before turn-around effect** | | | | | | | | | 3,233 | 0 | 0 | | | |
| **Turn-around effect of prior-period unrecorded audit differences** | | | | | | | | | 0 | 0 | 0 | | | |
| **Cumulative effect of unrecorded audit differences, after turn-around effect** | | | | | | | | | 3,233 | 0 | 0 | | | |
| **Current year change in net position** | | | | | | | **GW Basis** | **0.08%** | 4,017,902 | N/A | 3,896,117 | **0.00%** | | |
| **Current year change in fund balances** | | | | | | | **Fund Basis** | **0.00%** | N/A | 1,266,680 | 3,896,117 | **0.00%** | | |

# Village of Palm Springs

# Executive Brief

**AGENDA DATE:** May 13, 2021

**DEPARTMENT:** Administration

---

**ITEM 9.1:** Proposed Ordinance No. 2021-03 - Village Code Amendment - Chapter 34 - Law Enforcement and Parks & Recreation Impact Fees [**TO BE CONTINUED TO JUNE 10, 2021** ]

**SUMMARY:**

The Planning, Zoning & Building Department is recommending an amendment to the Village Code - Chapter 34 to create a new Division 14 "Impact Fees" within Article VI "Land Use" to adopt by reference the "Village of Palm Springs Impact Fee Study" prepared by Tindale Oliver and to establish impact fee rates for Village law enforcement and Village parks and recreation facilities.

Impact fees are a one-time capital charge levied against new development to support the portion of Village capital costs (of infrastructure) that are expected to be needed/consumed as a result of the new development. Thus, ensuring that new development supports the cost of required infrastructure to meet expected levels of service and not place this cost exclusively on existing property owners.

Note: Legal requirements for impact fees have primarily been established through case law since the 1980's, but the Florida Legislature has also passed statutory procedural and methodological requirements and limitations (found in Chapter 163.31801, Florida Statutes).

The Village retained impact fee experts, Tindale Oliver, to prepare a technical study to recommend the calculation of new impact fees for law enforcement and parks and recreation in compliance with statutory and case law requirements.

Note: The Village has assessed law enforcement and parks and recreation impact fees since at least 2006, but a technical study outlining the methodology for the current rates has not been located in the archives. Additionally, the Village Code mentions impact fees, but does not currently contain the specificity of the proposed code amendments.

The proposed Ordinance includes:

1. Adoption of the impact fee study would provide a consumption-based methodology for calculating impact fee rates to be charged to new development based on the burden (demand) placed on law enforcement and parks and recreation services
2. Adoption of a schedule of rates established by land use category
3. Provisions for payment of impact fee at the time of issuance of building permits
4. Provisions for alternative fee calculations should an applicant desire to perform their own study to determine applicable rates for a proposed project
5. Allowances for developer-contribution credits
6. Allowances and restrictions on Village use of impact fees

The Consultant has developed recommended rates to be considered by the Village Council and are outlined within the attached schedule. A sample of these rates are as follows:

| Land Use | Impact Unit | Current Law Enforcement Impact Fee | Proposed Law Enforcement Impact Fee | Current Parks & Recreation Impact Fee | Proposed Parks & Recreation Impact Fee |
|---|---|---|---|---|---|
| Single Family Residential | dwelling unit | $131.80 | $274.44 | $273.00 | $659 |
| Multi-Family Residential | dwelling unit | $131.80 | $199.63 | $273.00 | $485 |
| General Office | 1,000 s.f. | $56.53 | $139.20 | $ 0 | $0 |
| Commercial Retail | 1,000 s.f. | $44.45 | $236.16 | $ 0 | $0 |
| Fast Food Restaurant & drive-thru | 1,000 s.f. | $44.45 | $1,517.08 | $ 0 | $0 |

The Village Council may adopt rates that below the recommended rates and/or may may also "phase in" rates by adopting an impact fee schedule with planned increases each fiscal year that are within the maximum rates calculated by the methodology outlined in the Tindale Oliver impact fee study.

Note: Currently, the Florida Legislature is considering a proposed bill that would limit impact fee increases. As currently proposed, increases must be adopted in four equal installments, not exceed 50% of the current fee, and can only occur once every four years. If approved, this legislation would limit the Village's ability to pursue the "phase in" approach. Further, this proposed cap by the Legislature may change as this legislation is actively being considered and debated.

The Planning & Zoning Board considered the proposed ordinance during their meeting on April 13, 2021 and recommended approval.

The proposed ordinance was prepared by the Assistant Village Manager and reviewed by the Village Attorney, the Interim Planning, Zoning & Building Director, Police Chief, Parks and Recreation Director and the Finance Director.

The proposed ordinance was approved by the Village Council on April 8, 2021 and is being presented on 2nd and final reading.

If approved, the proposed, new impact fees will begin to be collected on new building permits that are issued after the effective date of the ordinance on June 21, 2021 (the required 90-day notice was published March 23, 2021).

**FISCAL IMPACT:**

The proposed, new impact fees would increase Village revenues to assist in supporting the requisite costs to provide the highest levels of policing and parks & recreation infrastructure and would be determined by the new growth that occurs within the Village.

Based on FY 2020 permit activity, the proposed, new impact fees are expected to generate approximately $7,537.12 and $18,304 for law enforcement and parks & recreation, respectively, within FY 2022.

Note: Previous years' revenues for both law enforcement and parks & recreation are provided below:

| Fiscal Year (FY) | Law Enforcement Impact Fee | Parks & Recreation Impact Fee |
|---|---|---|
| 2010 | $ 4,936.53 | $ 2,139.82 |
| 2011 | $ 9,399.46 | $ 1,710.80 |
| 2012 | $ 621.19 | $ 0 |
| 2013 | $ 5,281.94 | $ 5,320.97 |
| 2014 | $ 3,145.59 | $ 2,076.40 |
| 2015 | $ 31,282.65 | $ 5,119.60 |
| 2016 | $ 3,435.58 | $ 1,029.75 |
| 2017 | $10,366.17 | $10,903.00 |
| 2018 | $ 9,747.23 | $21,144.24 |
| 2019 | $22,161.00 | $30,202.63 |
| 2020 | $ 1,213.14 | $ 4,564.42 |

If approved, the proposed, new impact fees will begin to be collected on new building permits that are issued after the effective date of the ordinance on June 21, 2021 (the required 90-day notice was published March 23, 2021).

**ATTACHMENTS:**

# Village of Palm Springs

# Executive Brief

**AGENDA DATE:** May 13, 2021

**DEPARTMENT:** Planning, Zoning & Building

---

**ITEM 9.2:**

Ordinance No. 2021-04 - Village of Code Amendment - Chapter 34 - Special Events (*Second Reading*)

**SUMMARY:**

The Planning Zoning & Building Department is recommending an amendment to the Village Code - Chapter 34 Article VI "Land Use", Division 7 "Supplemental District Regulations" to clarify the definition of "special event."

In lieu of referencing the effective business license, which establishes the specific business use and limits of the premises, the amended language provides specific examples of activities that, if approved, would be considered as special events.

Note: The application requirements and process for consideration of a proposed special event are unchanged.

The Planning & Zoning Board considered the proposed ordinance at their meeting on April 13, 2021 and recommended approval.

The proposed ordinance was prepared by the Village Attorney and was reviewed by the Assistant Village Manager, Interim Planning, Zoning & Building Director and Police Chief.

The proposed ordinance was approved by the Village Council on April 8, 2021 and is being presented for consideration on 2nd and final reading.

**FISCAL IMPACT:**

The proposed ordinance does not have a direct fiscal impact to the Village.

**ATTACHMENTS:**

Proposed Ordinance No. 2021-04 - Village Code - Chapter 34 - Special Events

**ORDINANCE NO. 2021-04**

**AN ORDINANCE OF THE VILLAGE OF PALM SPRINGS, FLORIDA, AMENDING THE VILLAGE CODE OF ORDINANCES AT CHAPTER 34 "LAND DEVELOPMENT", ARTICLE VI, "LAND USE", DIVISION 7 "SUPPLEMENTAL DISTRICT REGULATIONS" BY AMENDING SECTION 34-896 TO CLARIFY THE DEFINITION OF "SPECIAL EVENT" FOR WHICH A SPECIAL EVENT PERMIT IS REQUIRED; PROVIDING FOR CODIFICATION; PROVIDING FOR REPEAL OF CONFLICTING ORDINANCES; PROVIDING FOR SEVERABILITY, AND PROVIDING FOR AN EFFECTIVE DATE.**

**WHEREAS**, the Village of Palm Springs, Florida (the "Village") is a duly constituted municipality having such power and authority conferred upon it by the Florida Constitution and Chapter 166, Florida Statutes; and

**WHEREAS**, this proposed ordinance amends Section 34-896(a) of the Village Code of Ordinances to clarify the definition of "special event" for which a special event permit is required; and

**WHEREAS**, the Village Council has reviewed the recommended revisions and has determined that it is in the best interest of the public health, safety, and general welfare of the Village to adopt this ordinance.

**NOW THEREFORE, BE IT ORDAINED BY THE VILLAGE COUNCIL OF THE VILLAGE OF PALM SPRINGS, FLORIDA:**

**Section 1.** The foregoing recitals are incorporated herein as true and correct findings of fact of the Village Council and serve as a basis for adoption of this Ordinance.

**Section 2.** Chapter 34 "Land Development", Article VI, "Land Use,", Division 7 "Supplemental District Regulations" is hereby amended by amending subsection (a) of Section 34-896 as follows:

**Section 34-896 Special events**.

(a) *Permit required.* Any person, corporation, or other entity of any kind who desires to conduct any type of special event ~~or temporary recreational event~~ within the village ~~and which is not covered under the regular business tax receipt and registration required by article IV, or that is held in whole or in part upon village-owned property and/or public right-of-way~~, must obtain a special event permit from the village in order that the village may adequately provide for the potential impacts created by the proposed event. The fee for such permit shall be set by resolution of the Village

Council. Outdoor sales, grand opening promotions, and other similar events, per section 34-884, are not subject to this section. For the purposes of this section, “special event” shall mean any occasion, including but not limited to exhibitions, celebrations, festivals, special sales events, shows, and other activities taking place on non-residential private property that involves, on a temporary basis, the occupation of land and/or construction of improvements not identified in an approved site plan or other development approval. Special events shall not include activities to be conducted entirely within public parks or on public right-of-way or vacant property. Factors indicative of a special event includes any one or more of the following:

(1) Closing of a public street, sidewalk, or alleyway;

(2) Blocking or restricting public property.

(3) Blocking or restricting access to private property of others.

(4) Use of pyrotechnics or special effects.

(5) Use of open flame, explosions, or other potentially dangerous displays or actions.

(6) Use or display of animals, aircraft, or watercraft.

(7) Sale or service of merchandise, food or nonalcoholic and alcoholic beverages on public and private property where otherwise prohibited by ordinance.

(8) Installation of a stage, band shell, vehicle(s), of any kind, trailer, van, portable building, booth, grandstand, or bleachers on public or private property where otherwise prohibited by ordinance.

(9) Placement of "No Parking" signs or barricades in a public right-of-way.

(10) Electronic amplification of music, voices, sounds, or activities

(11) Determination by village staff that the event will result in substantial impact on city resources, facilities, or public safety services in response thereto.

Examples of special events include, but are not limited to, the promotion of concerts, markets, seminars, expositions, community events, fairs, festivals, carnivals, filming, processions, parades, circuses, amusement rides, rodeos, fundraising, marathons and other running events, walkathons, block party, bicycle races and tours, sporting events, car shows, revivals, dances, assemblages, or any other similar organized activity, whether for profit or not for profit, and any other situations which are outside the normal scope of permitted activities for a location, or which may have some impact on the community-at-large.

**Section 3. Codification.** The sections of the ordinance shall be made a part of the Village Code of Laws and ordinances and may be re-numbered or re-lettered to accomplish such, and the word "ordinance" may be changed to "section", "division", or any other appropriate word.

**Section 4. Repeal of Conflicting Ordinances.** All Ordinances, Resolutions or parts of Ordinances and Resolutions in conflict herewith are hereby repealed.

**Section 5. Severability.** If any word, clause, sentence, paragraph, section, or part thereof contained in this Ordinance is declared to be unconstitutional, unenforceable, void or inoperative by a court of competent jurisdiction, such declaration shall not affect the validity of the remainder of this Ordinance.

**Section 6. Effective Date.** This Ordinance shall become effective immediately upon adoption.

Council Member _____, offered the foregoing Ordinance, and moved its adoption. The motion was seconded by Council Member _____, and upon being put to a vote, the vote was as follows:

| | Aye | Nay | Absent |
|---|---|---|---|
| BEV SMITH, MAYOR | ☐ | ☐ | ☐ |
| GARY READY, VICE MAYOR | ☐ | ☐ | ☐ |
| DOUG GUNTHER, MAYOR PRO TEM | ☐ | ☐ | ☐ |
| JONI BRINKMAN, COUNCIL MEMBER | ☐ | ☐ | ☐ |
| PATTI WALLER, COUNCIL MEMBER | ☐ | ☐ | ☐ |

The Mayor thereupon declared this Ordinance approved and adopted by the Village Council of the Village of Palm Springs, Florida, on second reading, the _____ day of _____, 2021.

VILLAGE OF PALM SPRINGS, FLORIDA

BY: _____
BEV SMITH, MAYOR

First Reading:_____

Second Reading:_____

ATTEST:

BY: _____
KIMBERLY WYNN, VILLAGE CLERK

REVIEWED FOR LEGAL FORM AND SUFFICIENCY

BY: _____
GLEN J. TORCIVIA, VILLAGE ATTORNEY

# Village of Palm Springs

# Executive Brief

**AGENDA DATE:** May 13, 2021

**DEPARTMENT:** Planning, Zoning & Building

---

**ITEM 9.3:** Ordinance No. 2021-02 - Land Use and Rezoning (Small-Scale) Amendments - Fontana Townhomes - 4063 Davis Road & 4090 Coconut Road (Quasi-Judicial Hearing) (*Second Reading*)

**SUMMARY:**

Mr. Jerrod Purser, agent for Meritage Homes of Florida, Inc., is requesting a small-scale land use plan amendment and rezoning on 4.48 acres (comprised of two parcels) located at 4063 Davis Road and 4090 Coconut Road to facilitate a multi-family (townhome) development project.

The proposed small-scale land use and zoning changes would be from Palm Beach County designations to Palm Springs designations and the combined properties are less than 10 acres in size (4.48 acres total) and are planned for urban (residential) use:

| Existing PBC Future Land Use | Proposed Village Future Land Use | Existing PBC Zoning | Proposed Village Zoning |
|---|---|---|---|
| Palm Beach County Urban Infill | High Density Residential (up to 19 du/ac) | Palm Beach County Urban Infill (UI) | Residential Multiple-Family (RM) |

The Applicant is requesting that the property be designated with the Village's High-Density Residential future land use category (19 du/ac), which would allow up to a maximum intensity of 89 residential dwelling units. The property was annexed into the Village of Palm Springs in 2017 and 2019; however, Palm Beach County Future Land Use and Zoning designations were maintained until a specific use was proposed.

Note: The subject property is bound to the north and east by Commercial land use, to the south and west by Palm Beach County Medium Density Residential 5 (MR5) land use.

The Applicant is concurrently requesting site plan approval (SPR21-02) and four (4) waivers for residential planned development (RPD) to construct 59 two-story fee simple townhomes within 9 buildings. The proposed community would have access via Davis Road and Coconut Road. Amenities are expected to include playground equipment, a picnic table under shade structure and benches.

The Applicant is requesting four (4) waivers for the proposed RPD site plan:

1. Relief from Sec.34-1328 to allow a 20' wide drive aisle rather than 26' wide required.
2. Relief from Sec.34-1063(a)(1) to allow for one sidewalk on a street or primary driveway interconnected with other pedestrian ways instead of sidewalks on both sides of the main street.
3. Relief from Sec.34-766(1) to allow the construction of 59 residential dwelling units within 4.73 acres rather than 12.55 acres minimum required within the RM district.
4. Relief from Sec.34-1064(1)(b) to allow a 15' side setback rather than 20' minimum required.

The proposed site plan with waivers is presented (within this item) for informational purposes only (no action required at this time). If the proposed small-scale land use map and rezoning amendments are approved on the 2nd and final reading, the proposed site plan will be considered by the Village Council under a separate Resolution.

Note: The Village does not typically place conditions of approval on future land use map changes. The legislative decision as to the appropriateness of the land use, irrespective of potential development plans, is generally made with consideration on compatibility, impact on services and need for the land use to fulfill Village redevelopment and growth objectives.

The proposed request was submitted through the PBC Intergovernmental Plan Amendment Review Committee (IPARC) for intergovernmental review and no comments were received.

Note: IPARC is designated to provide coordination of proposed plan amendments, cooperation between affected local government and service providers and provides opportunities to resolve potential disputes only within the plan amendment process.

The Planning and Zoning Board considered this application during their March 9, 2021 meeting and recommended approval. The Local Planning Agency (LPA) considered this item during their April 8, 2021 meeting and recommended approval.

The proposed ordinance was approved by the Village Council on April 8, 2021 and is being presented for consideration on 2nd and final reading.

**FISCAL IMPACT:**

The proposed land use and rezoning amendments are not expected to provide a direct fiscal impact to the Village; however, it would facilitate development that will increase the Village's property valuation. Additionally, this project, if approved, would require various Village

services that will result in increased expenditures to the Village.

This property is located within the Palm Springs CRA - Lake Worth District and redevelopment would result in increased TIF revenue.

**ATTACHMENTS:**

Proposed Ordinance No. 2021-02 - Comprehensive Plan (Small Scale) Land Use Map & Rezoning Amendment - 4063 Davis Road & 4090 Coconut Road
Exhibit "A" Staff Report & Conditions of Approval (Both Applicants Combined)
Applicant's Justification Statements
Proposed Site Plan, Landscape Plans, Building Elevations (Information Only)
Color Site Plan and Color Rendering (Information Only)
Aerial, Location, FLU and Zoning Map

**ORDINANCE NO. 2021-02**

(SMALL SCALE LAND USE AMENDMENT & REZONING)

**AN ORDINANCE OF THE VILLAGE OF PALM SPRINGS, FLORIDA, AMENDING THE COMPREHENSIVE LAND USE PLAN OF THE VILLAGE, PURSUANT TO THE "SMALL SCALE" COMPREHENSIVE LAND USE AMENDMENT LAWS OF THE STATE OF FLORIDA, FOR THE 4.73 GROSS ACRE PARCEL LOCATED AT 4063 DAVIS ROAD AND 4090 COCONUT ROAD, AND BEING MORE FULLY DESCRIBED IN EXHIBIT "A" ATTACHED HERETO, FROM A LAND USE DESIGNATION OF "URBAN INFILL" TO A VILLAGE FUTURE LAND USE DESIGNATION OF "HIGH DENSITY RESIDENTIAL"; FURTHER CHANGING THE ZONING DESIGNATION FROM "URBAN INFILL (UI)" TO PROVIDE FOR A ZONING DESIGNATION OF "RESIDENTIAL MULTI-FAMILY (RM)" AND A PLANNED DEVELOPMENT SITE DISTRICT ON THE VILLAGE OF PALM SPRINGS OFFICIAL ZONING MAP; PROVIDING DIRECTIONS TO THE VILLAGE CLERK; PROVIDING FOR REPEAL OF ALL ORDINANCES IN CONFLICT; PROVIDING FOR SEVERABILITY; AND PROVIDING FOR AN EFFECTIVE DATE.**

**WHEREAS**, the Village has determined the need to amend the land use and zoning designations for the 4.73 gross acre parcels located at 4063 Davis Road and 4090 Coconut Road; and

**WHEREAS,** on December 21, 2017, Resolution No. 2017-49 the property located at 4090 Coconut Road was voluntarily annexed in the Village of Palm Springs, and the property located at 4063 Davis Road, was annexed via Interlocal Agreement with Palm Beach County on the same date; and

**WHEREAS**, the Village will initiate the small-scale land use and zoning changes from the existing Palm Beach County designation. The subject properties are less than 10 acres in size; and

**WHEREAS,** the Village has adopted a Comprehensive Plan pursuant to the Local Government Comprehensive Planning and Land Development Regulation Act (the "Act"); and

**WHEREAS,** the Village Council, sitting as the Village's Local Planning Agency (the "LPA") will consider this item on April 8, 2021 and their recommendation will be provided to the Council prior to consideration; and

**WHEREAS,** the Village Council has considered the request of Village Staff for small-scale land use amendments and re-zoning designations; and

**WHEREAS,** the Village Council has determined that granting the request for land use amendments and rezoning serves a valid public purpose.

**NOW THEREFORE, BE IT ORDAINED BY THE VILLAGE COUNCIL OF THE VILLAGE OF PALM SPRINGS, FLORIDA:**

**Section 1. Findings.** The Village Council finds the above statements are true and correct and serve as a basis for consideration of this ordinance.

**Section 2. Future Land Use.** The Future Land Use designation in the Village's Comprehensive Land Use Plan for the lands described herein, as more particularly designated in "**Exhibit A"** shall be established as "High Density Residential". Until such time as the appeal period expires, (if challenged, the new zoning is not effective until such time as the state land planning agency or the Administration Commission issues a final order of compliance) but not sooner than 31 days following the effective date of this ordinance, all development of said lands shall be subject to the requirement of the existing Village Land Use Plan, Zoning, and Subdivision regulations.

**Section 3. Zoning.** Concurrent with said small-scale land use amendments, the Land Development (Zoning) District designations on the official Village of Palm Springs Zoning Map shall be established as "Residential Multiple-Family (RM)" more particularly designated in **Exhibit "A"**, subject to the approval and appeal period stated in Section 2, above.

**Section 4. Directions to the Village Clerk.** The Village Clerk is hereby authorized and directed to forthwith cause the designations of the zoning of the properties described in the attached "**Exhibit A",** as set forth in Section 3 of this Ordinance, on the official Village of Palm Springs Zoning Map.

**Section 5. Repeal of Conflicting Ordinances.** All Ordinances, Resolutions or parts of Ordinances and Resolutions in conflict herewith are hereby repealed.

**Section 6. Severability.** If any word, clause, sentence, paragraph, section, or part thereof contained in this Ordinance is declared to be unconstitutional, unenforceable, void, or inoperative by a court of competent jurisdiction, such declaration shall not affect the validity of the remainder of this Ordinance.

**Section 7. Effective Date.** This Ordinance shall become effective immediately upon adoption.

Council Member _____, offered the foregoing Ordinance, and moved its adoption. The motion was seconded by Council Member _____, and upon being put to a vote, the vote was as follows:

| | Aye | Nay | Absent |
|---|---|---|---|
| BEVERLY SMITH, MAYOR | ☐ | ☐ | ☐ |
| GARY READY, VICE MAYOR | ☐ | ☐ | ☐ |
| DOUG GUNTHER, MAYOR PRO TEM | ☐ | ☐ | ☐ |
| JONI BRINKMAN, COUNCIL MEMBER | ☐ | ☐ | ☐ |
| PATTI WALLER, COUNCIL MEMBER | ☐ | ☐ | ☐ |

The Mayor thereupon declared this Ordinance approved and adopted by the Village Council of the Village of Palm Springs, Florida, on second reading, this _____ day of _____, 2021.

VILLAGE OF PALM SPRINGS, FLORIDA

BY: _____

BEVERLY SMITH, MAYOR

First Reading_____

Second Reading_____

ATTEST:

BY: _____

KIMBERLY M. WYNN, VILLAGE CLERK

REVIEWED FOR LEGAL FORM AND SUFFICIENCY

BY: _____

GLEN J. TORCIVIA, VILLAGE ATTORNEY

PLANNING, ZONING & BUILDING STAFF REPORT

SUBJECT: Small-Scale Land Use Amendment, Rezoning and Site Development Plan (Residential Planned Development Site Plan with Waivers) - Fontana Townhomes – 4063 Davis Road & 4090 Coconut Road.

| Application Summary | | | |
|---|---|---|---|
| Applicant / Petitioner | Meritage Homes of Florida, Inc. | Submittal Date | 10/20/2020 |
| Reference Name | Fontana Townhomes | Case Number | SPR21-02 |
| | | Parcel Control No | 70-42-44-24-00-000-6070 & 70-43-44-30-01-009-0040 |
| Location | Assembly of the properties 4063 Davis Rd & 4090 Coconut Road | Site Area | ±4.73 gross acres<br>±4.48 net acres |
| P&Z B Meeting | March 9, 2021 | Local Planning Agency | April 8, 2021 |
| Council Meeting (after LPA, 1st Reading) | April 8, 2021 | Council Meeting (2nd Reading) | May 13, 2021 |

| Requests | |
|---|---|
| Proposed Use(s) | Small-Scale Land Use Amendment of the Future Land Use Map to change the land use from Urban Infill to High Density Residential, concurrent with Rezoning from Urban Infill (UI) to Residential Multiple- Family and a Planned Development Site Plan for construction of 59 two-story townhomes within nine buildings. |
| Number of Buildings | 9 Buildings (approximately 50,000 SF total) |
| Waivers | 1. Requesting a waiver from Sec.34-1328 to allow a 20' drive aisle instead of 26' required.<br>2. Requesting a waiver from Sec.34-1063(a)(1) to allow for one sidewalk on a street or primary driveway interconnected with other pedestrian ways instead of sidewalks on both sides of the main street.<br>3. Requesting a waiver from Sec.34-766(1) to allow the construction of 59 residential dwelling units within 4.73 acres instead of 12.55 acres minimum required within the RM district.<br>4. Requesting a waiver from Sec.34-1064(1)(b) to allow a 15' side setback instead of 20' minimum required. |

| Parking | | | |
|---|---|---|---|
| Code | Required | Provided | Meets Requirement |
| Total Parking | Total of 185 parking needed<br>2.5/ DU + 25% for guest | 185 spaces total<br>59 garages spaces<br>118 driveway spaces (2 per unit)<br>8 guest spaces | Yes |

| Setbacks | | | |
|---|---|---|---|
| Code | Required Minimum | Proposed | Meets Requirement |
| Front yard (East & West) | 25' | 25' | Yes |
| Rear yard (South) | 20' | N/A (two frontage) | - |
| Side yard (North & South) | 20' | 15' | No* (waiver requested) |

| Site Characteristics | | | |
|---|---|---|---|
| Existing Use | Vacant lot & Single-Family Home | Proposed Use | Residential Multiple-family |
| Existing Zoning | Urban Infill (UI) | Proposed Zoning | Residential Multiple-Family (RM) |
| Existing Future Land Use | Urban Infill | Proposed Future Land Use | High Density Residential |

| | |
|---|---|
| Proposed Density | 12.5 du/acres<br>(Maximum permitted on High Density Residential is 19 du/acre) |

| Surrounding Existing Land Use, Future Land Use, and Zoning | | | |
|---|---|---|---|
| Direction | Existing Use | Future Land Use | Zoning District |
| North | Mobile home park & medical office building | Urban Infill & Commercial | Urban Infill (UI) & Commercial General (CG) |
| South | Single Family Home & Vacant lot | Unknown Unincorporated Palm Beach County | Unknown Unincorporated Palm Beach County |
| East | Drive in theater – Swap Shop | Commercial | Commercial General (CG) |
| West | PBC Governmental office | Unknown Unincorporated Palm Beach County | Unknown Unincorporated Palm Beach County |

| Recommendation |
|---|
| Planning, Zoning & Building Staff recommends conditional approval of the new residential high density planned development site plan, as depicted on the proposed site plan, based on consistency with the Village Comprehensive Plan, compatibility with surrounding uses and generally consistent with the CRA Lake Worth Road District objectives. |



I. Site History

- Ordinance 2017-35: Annexation

The property located at 4090 Coconut Road, was voluntarily annexed into the Village of Palm Springs on December 21, 2017. Palm Beach County's Future Land Use and Zoning designations were maintained until today's date.

- Resolution 2017-49: Annexation

The property located at 4063 Davis Road, was annexed into the Village of Palm Springs via interlocal agreement with Palm Beach County, the agreement was executed by Palm Beach County on October 22, 2019, Village's Council approved the annexation on December 21, 2017. Palm Beach County's Future Land Use and Zoning designations were maintained until today's date.

II. Comprehensive Plan Consistency

- The subject property's Future Land Use designation and Zoning are Palm Beach County Urban Infill and Urban Infill (UI), respectively. The proposed small-scale land use amendment is to assign the Village's Future Land Use of High Density Residential. Concurrently, rezoning from the Palm Beach County zoning designation of Urban Infill to Residential Multiple-Family is requested, and is supported with a planned development site plan. All requests are consistent with goals, objectives and policies of the Village's Comprehensive Plan.

III. Waivers Requested

The applicant is seeking the following waivers:

Waiver #1: The applicant is requesting a waiver relief from Sec.34-1328 to allow a 20' wide drive aisle instead of 26' wide required.

Waiver #2: The applicant is requesting a waiver relief from Sec.34-1063(a)(1) to allow for one sidewalk on a street or primary driveway interconnected with other pedestrian ways instead of sidewalks on both sides of the main street.

Waiver #3: The applicant is requesting a waiver relief from Sec.34-766(1) to allow the construction of 59 residential dwelling units within 4.73 acres instead of 12.55 acres minimum required within the RM district.

Waiver #4: The applicant is requesting a waiver relief from Sec.34-1064(1)(b) to allow a 15' side setback instead of 20' minimum required.

The applicant's full justification to the waivers is attached hereto.

a. <u>The request is in harmony with and is consistent with the purpose and intent of the Village's Comprehensive Plan and Land Development Code and that such waiver will not be injurious to the area involved or otherwise detrimental to the public health, safety, and welfare.</u>

Waiver 1: The request to allow a 20' wide drive aisle when adjacent to 90-degree parking is in harmony and is consistent with the purpose and intent of the Village's Comprehensive Plan and Land Development Code. The majority of the subject site is compliant with the required drive aisle dimensions, however there are even 90-degree parking spaces in a portion of the site which require a 26' wide drive aisle. This waiver will not be injurious to the area involved, as traffic can still safely maneuver into and out of the parking spaces.

Waiver 2: The request to allow a sidewalk along one side of the street where a sidewalk is required along both sides will not be injurious to the area involved or otherwise detrimental to the public health, safety, and welfare. As previously stated, this waiver will allow for greater flexibility in site design and adequate pedestrian connectivity will be provided.

Waiver 3: The request to allow a reduced lot size from the required minimum lot requirements is outside of the Applicant's control and will not affect the public health safety, and welfare.

Waiver 4: The request to allow a reduced side setback is consistent with the purpose and intent of the Village's Comprehensive Plan and Land Development Code, and will not be injurious to the area involved or otherwise detrimental to the public health, safety, and welfare. The subject area of this request is specific to lot 52, which is along the northern portion of the site. It is screened by the adjacent northern property by a 10' landscape buffer and existing 6' concrete wall. The request also applies to lots 14 and 15, along the southern portion of the site, adjacent to the LWDD L-12 Canal. These lots are screened by a 10' landscape buffer with a 5' vinyl fence.

b. The request results from innovative design in which other minimum standards are exceeded.

Waiver 1: The request to allow a reduced drive aisle width when adjacent to 90-degree parking results from innovative design in which other minimum standards are exceeded. The subject site is compliant with the required drive aisle width in all other areas.

Waiver 2: The request to allow a sidewalk along one side of the street where a sidewalk is required along both sides will not be injurious to the area involved or otherwise detrimental to the public health, safety, and welfare. As previously stated, this waiver will allow for greater flexibility in site design and adequate pedestrian continuity will be provided.

Waiver 3: The request to allow a reduced lot size is not the result of innovative design. The lot is predisposed to be smaller than the required minimum and is outside of the control of the applicant.

Waiver 4: The request to allow a reduced side setback distance results from innovative design in which other minimum standards are exceeded. The areas of focus for the reduced side setback, currently propose landscaping above code requirements and provide an existing 6' concrete wall and 5' vinyl fence.

c. The request demonstrates that granting of the waiver will result in preservation of valuable natural resources, including drainage and recharge areas, natural areas, etc.

Waiver 1: The granting of the waiver request related to reduced drive aisle width will result in the preservation of valuable natural resources. A narrower street width equates to less impervious area, as a result this will help preserve valuable natural resources.

Waiver 2: The granting of the waiver request will result in the preservation of valuable natural resources, including drainage and recharge areas, and natural areas. As aforementioned, by negating the requirement for an extra sidewalk, this will allow for increased pervious areas throughout the subject site.

Waiver 3: The request to allow a reduced lot size will not result in preservation of valuable natural resources. The lot is predisposed to be smaller than the required minimum and is outside of the control of the applicant.

Waiver 4: The reduced side setback will result in the preservation of valuable natural resources. This will be achieved, as the reduced setback will allow for greater design freedom and allow for more opportunity to preserve natural resources.

d. The request demonstrates public benefits to be derived, including but not limited to such benefits as dedication of rights-of-way, extensions of pedestrian linkages outside of the project boundaries, preservation of open areas and use of desirable architectural, building, and site design techniques.

Waiver 1: The request will demonstrate public benefits such as desirable site design techniques. By allowing for a narrower drive aisle adjacent to parking spaces, there is room for more pervious area and potential open spaces. This will create a more desirable community for future residents.

Waiver 2: The request will demonstrate public benefits such as extension of pedestrian linkages outside of the project boundaries. The subject site is located in an ideal area with close proximity (less than 300 feet) to the Lake Worth Road Corridor The proposed sidewalk network will connect to the existing Davis Road sidewalk and allow walkability to the surrounding areas and services.

Waiver 3: The request to allow a reduced lot size does not demonstrate public benefits to be derived. The lot is predisposed to be smaller than the required minimum and is outside of the control of the applicant.

Waiver 4: The waiver request will demonstrate public benefits such as desirable site design techniques and right-of-way dedication to the LWDD L-12 Canal. By allowing for a reduced side setback, the subject site will have more design freedoms to provide increased open space and additional drainage.

e. The request provides sufficient screening and buffering to screen adjacent uses from adverse impacts caused by the granting of a waiver.

Waiver 1: The request will not jeopardize the screening of the subject site as it relates to a decreased drive aisle width in a specific portion of the site.

Waiver 2: This waiver request is specific to the pedestrian sidewalks within the subject site and would not adversely impact adjacent properties. However, appropriate landscape buffering and screening is provided.

Waiver 3: The waiver does not generate any adverse impacts related to adjacent properties; however, the applicant will sufficiently screen and buffer the property.

Waiver 4: The waiver request will provide sufficient screening and buffering to screen adjacent uses from any adverse impacts created by the reduced side setback This reduced setback is specific to two areas of the subject site, which propose landscaping above code requirements and provide an existing 6' concrete wall and 5' vinyl fence.

f. Economic issues may not be used to justify waivers.

Waiver 1, 2, 3 & 4: Economic issues are not used as a justification for these requests.

g. The request is compatible with existing and potential land uses adjacent to the development site.

Waiver 1, 2, 3 &4: The request is consistent with the existing and potential land uses adjacent to the development site. A majority of the surrounding uses are residential communities which either provide one sidewalk or no sidewalks. There is a sidewalk along Davis Road which the subject site's sidewalk system will connect to. Overall, a waiver request for a decreased street width, single sidewalk, and a reduced side setback will not generate compatibility issues.

*Staff supports the applicant's request based on the intent of the applicant to maximize the utilization of the land reducing the amount of impervious surface and consistency with the Village Comprehensive Plan*

*allowing for innovative designs. Although the acreage is below the minimum required for 59 residential dwelling units, the property can still be developed in the proposed manner without any adverse impact to the surrounding properties.*

IV. Neighborhood Compatibility

1) The proposed project is located on the south side of Lake Worth Road between Coconut Road and Davis Road.
2) Surrounding properties are a mix of residential and commercial uses.
3) The property is located within the Lake Worth Road District CRA.
4) The Village Center is located within 1.5 miles.
5) A mix of different uses like general retails, restaurants, grocery supermarket and professional offices are located on the proximities along Lake Worth Road.
6) Available public transportation on Lake Worth Road and South Military Trail are existing within less than 1 mile from the property.

V. Consistency with Palm Springs Lake Worth Road District CRA

1. Detailed Description of the Proposal's Consistency with Five (5) Key Goals of CRA

I. Improving Utilities and Infrastructure

The development proposal will extend new Utilities and install new site-serving Infrastructure to the site, as improvements are necessary in order to construct the Townhouses.

II. Expanding Job Development and Economic Growth

The development proposal does not directly fulfill the CRA's key goal to expand job development and economic growth, but it will provide additional residents to supply the workforce and economy of the Village.

III. Enhancing Public Safety

The development proposal will enhance public safety, as the subject site is currently abandoned and an ideal area for vagrancy, illegal dumping and other criminal activities to occur due to its location adjacent to the LWDD canal and separation from Lake Worth Road. The development of buffers, fencing, and additional landscape screening around the perimeter of the subject site will significantly decrease the chance of any crime occurring on this property in the future.

IV. Increasing and Maintaining Workforce Housing

While Workforce Housing is not a component of this development proposal, the overall nature of the development program will create an equal opportunity for all Village residents to increase homeownership. Townhouses offer an affordable entry level homeownership opportunity. More ideal than renting and more achievable than purchasing a single-family residential house, the development proposal will provide much needed home options for residents of the Village.

V. Advancing the Partnership with Palm Beach County

The development proposal will advance the partnership with Palm Beach County due to its location within the Hernden Park Countywide Community Revitalization Area (CCRT) neighborhood core area. The Countywide Community Revitalization Area's within Palm Beach County are overseen by the County's Office of Community Revitalization (OCR). This request will require the continued coordination with the County and surrounding Hernden Park residents to ensure the communities needs are met.

2. Proposal's effect on existing conditions (identified in CRA Community Redevelopment Plan) in the CRA District.

As evidenced by the Lake Worth Road subdistrict study, the Lake Worth Road subdistrict is currently subject to slum/and or blighted conditions. Some of the existing conditions include faulty lot layout in relation to usefulness, inadequate building density patterns, and incidence of crime in the area higher than in the remainder of the county or municipality. This proposal will improve all of the aforementioned negative existing conditions on the subject site and in turn have an effect on the immediately surrounding area.

3. Proposal's ability to assist in achieving strategies and objectives of the Palm Springs CRA.

The development proposal will assist in achieving strategies and objectives of the CRA as it addresses an existing blighted area within the Village. As evidenced by the subdistrict study, the Lake Worth Road subdistrict is subject to slum/and or blighted conditions. The subject site has sat abandoned for many years and allows for an incidence of crime in the area due to its ideal location next to the LWDD canal and separation from Lake Worth Road. Proposing a residential development such as the Fontana Townhomes development will assist in achieving the CRA's strategies to address blighted areas, by improving the area and discouraging criminal traffic.

## VI. Regulatory Issues

- The site plan generally conforms to the property development standards of the Residential Planned Development.
  1) Proposed project plan generally meets required site development regulations.
  2) A High-Density Residential Land Use designation and rezoning to RM, shall be approved prior to consideration of the proposed Site Plan.
  3) The applicant is responsible to acquire all applicable permits from all regulatory agencies with jurisdiction over the project site, including but not limited to Palm Beach County, LWDD and the Village of Palm Springs.
  4) Civil/Utility plans shall be approved by the Village's Engineer.
  5) Proposed ROW dedications along the west, south and east shall be approved by PBC and LWDD respectively at time of Civil/Utility plan review.
  6) The project is located within the Airport Land Use Noise Zone (ALUNZ) for Palm Beach County Park Airport.
  7) The proposed development is located within the Airport Regulated area Zone 3 & Zone 1 for PBIA and Lantana Airport
  8) The 10' pipe easement (ORB. 2204PB. 1150) shall be abandoned at time of Civil/Utility review.
  9) Proposed Site Plan meets the Traffic Performance Standards of Palm Beach County.
  10) Property shall be platted.

## VII. Environmental Issues:

There are no environmental (wetlands, floodplains, etc.) issues identified.

## VIII. Community Outreach/ Notification

- The subject property was posted on February 26, 2021.
- Public Notification letters were mailed to all property owners within 300 feet radius of subject property on February 19, 2021.
- Legal advertisement was published in the paper on February 25, 2021 and will be re-advertise on March 25, 2021 and April 28, 2021.
- Staff has not received any inquiries or comments as a result of the notices.

## IX. Proposed Development Plan Details

The petitioner's development plans dated received on October 20, 2020 depicts the following:

- Application for Small-Scale Land Use Amendment, Rezoning and Residential Planned Development Site Plan approval with 4 waivers for the construction of 59 two-story fee-simply townhomes within 9 buildings.
  1. Site Plan dated received October 20, 2020 revised and resubmitted on February 24, 2021.
  2. Landscape plans dated received October 20, 2020 revised and resubmitted on February 24,

2021.
3. Engineering plans dated received October 20, 2020 revised and resubmitted on January 15, 2021.
4. Architectural plans dated received October 20, 2020 revised and resubmitted on December 21, 2020.
5. Photometric plan dated received October 20, 2020 revised and resubmitted on December 21, 2020.
6. Boundary and topographic survey dated received October 20, 2020.
7. Traffic study.
8. Project narrative and Justification Statement of proposed use.
9. Drainage calculations dated received October 20, 2020 revised and resubmitted on December 21, 2020.
10. Common amenities detail plan.

X Recommendation

The applicant is proposing the development of the 4.73 acres parcel with the construction of 59 two-story fee-simple townhomes. The townhomes will be three-bedroom homes with a one car garage and a driveway with space for two cars. The buildings will be configured with five (5) 6-townhome units, three (3) 7-townhome units and one (1) 8-townhome units, for a total of nine (9) buildings. The community will have two access driveways via the existing Davis Road and Coconut Road right-of-way. Amenities include a tot lot with playground equipment, a shade structure, picnic table and sports field for lawn games.

Planning, Zoning & Building Staff has conducted a review of the application and found the proposed Residential Planned Development Site Plan to be consistent with goal, objectives and policies of the Village's Comprehensive Plan. The proposed project is generally consistent with the Land Development and zoning regulations and all other portions of the code. The proposed residential multi-family project provides internal sidewalk connections between the common amenities (tot lot with playground equipment, a shade structure, picnic table and sports field for lawn games) and the buildings, to facilitate pedestrian circulation and safety. The proposed project provides open spaces creating common areas for passive/leisure activities. The proposed use does not significantly reduce light and air on adjacent properties and would not be a deterrent to surrounding properties. The new project does not negatively impact natural systems.

A respectively 15' and 10' wide right-of-way, along Coconut Road and Davis Road, is required to be dedicated to Palm Beach County to comply with county standards.

In addition, the project exceeds some of the minimum requirement for a Planned Development as shown on the table below:

| Land Development Regulations | Required | Proposed |
|---|---|---|
| 35 percent of the gross land area for open space | 68,302 sf (1.57 acres) | 81,457 sf (1.87 acres) |
| 40% maximum lot coverage | 82,415 sf | 50,000 sf |

Planning, Zoning & Building Staff recommends approval of the Small-Scale Land Use Amendment and Rezoning. PZ&B Staff recommends conditional approval of the Residential Planned Development Site Plan with 4 waivers, for the construction of 59 two-story fee simple townhomes subject to the following forty-eight (48) conditions below and a suggestion for a voluntary monetary contribution, requested by the School District to mitigate school impacts:

1. Build out date December 31, 2025.
2. Notice of Actual Construction or Alteration form shall be filled out (form 7460) to determine if the project will be a hazard to air navigation, according to PBIA, and a final determination letter shall be provided to the Village at time of permitting.

3. Per Palm Beach Department of Airports request, each perspective tenant and/or purchaser within the ALUNZ must be informed that occasionally will observe aircraft arriving at and departing from Palm Beach County Park Airport, and shall be disclosed prior to a real estate contract. The condition will become inclusive in the contract's conditions and shall be noted in subsequent contracts. Condition shall be added into the HOA covenants/ deed restrictions document and provided to the Village at time of Platting.
4. The final plat shall be approved by the Village Council prior to issuance of a building permit.
5. The Final Plat shall be approved and recorded prior to any sales.
6. The common amenities (tot lot with playground equipment, a shade structure, picnic table and sports field for lawn games) shall be completed in their entirety, open for use and accessible to the residents, prior to the issuance of the 23rd Certificate of Occupancy (40% of the project)
7. The dedication of 10' and 15' along Davis Road and Coconut Road respectively via Right-of-way Deed to Palm Beach County free and clear of all encumbrances (to comply with county standards) shall be executed at time of platting.
8. An opaque fence shall be provided around the lift station supplemented with landscaping and details shall be provided at time of permitting.
9. A Utility/Civil Plan shall be approved by the Village Engineer and Palm Beach County Water Utility Department at time of permitting and shall be revised to match site plan.
10. Garages shall be used for parking only. The HOA covenants/ deed restrictions shall include prohibit the conversion of garages into habitable spaces or used as storage.
11. The HOA covenants/ deed restrictions shall prohibit the installation of any additional impervious or semi-impervious surface.
12. The HOA shall be responsible for all landscape maintenance, including, but not limited to, mowing of private yards and trimming the trees adjacent to L-12 Canal. Canopy trees adjacent to L-12 Canal shall not impede, under any circumstances, the access to the canal for maintenance. The HOA shall be responsible for the removal of the trash after the any lawn work concluded. (this shall be included in the HOA documents).
13. The HOA covenants/deed restrictions shall prohibit the installation of sheds, the parking of boats, commercial vehicles, or recreational vehicles anywhere inside the property. Parking of oversized vehicles that do not fit within the typical parking stall (9'x18.5') shall also be prohibited.
14. Any/all legal instrument recorded shall include deed restrictions on the lots as follows:
    a. Garages shall remain as garages and shall not be converted to habitable space.
    b. Only two vehicles shall be parked in the driveways overnight and shall not be permitted to park on or block any sidewalk or drive isles.
    c. There shall be no screen enclosures or additions permitted including screening the rear patios.
    d. There shall be no pools permitted.
    e. Boats, RV'S, or recreational vehicles shall only be permitted if parked in the garage.
    f. No additional impervious or semi-impervious surface.
15. Each perspective tenant and/or purchaser shall be advised of noise issued due to the Swap Shop.
16. The construction dumpster shall be only provided by Waste Pro USA who is under franchise Agreement with the Village.
17. Conditions of approval stated in Village Engineer's letter (Engenuity Group, Inc.) issued on January 11, 2021 shall be satisfied at time of Civil/Utility application review.
18. No parking shall be allowed, under any circumstances, along the drive isle. Residents and guest parking shall only occur within designated parking stalls, private driveways and private garages.
19. The 10' pipe easement shall be abandoned at time of platting.
20. At time of permitting, provide value of construction and number of construction jobs created to be included in CRA annual report.
21. A future signalized intersection at Davis Road and Lake Worth Road will facilitate access via the Davis Road project entrance – this entrance should be enhanced as the main ingress/egress for the project.
22. Any existing or proposed utility box/cabinet shall be screened from view, Staff recommends wrapping the cabinets/box with a match design accordingly with the existing/proposed location.

23. Any existing or proposed utility easement shall not overlap more than 5' the landscape buffer.
24. Proposed 6' Vinyl fence along Davis Road and Coconut Road ROW is not a preferrable material by the Village, Staff recommends providing more durable/resistant material to prevent unwanted pedestrian traffic.
25. The property owner shall post a notice of annual boundary school assignments for students from this development. The district will provide an 11' x 17' sign to be posted in a clear and visible location in all sales offices and models with the following:

"NOTICE TO HOMEBUYERS/TENANTS"

"school age children may not be assigned to the public school closest to their residences. School Board policies regarding overcrowding or other boundary policy decisions affect school boundaries. Please contact the Palm Beach School District Boundary Office at (561)434-8100 for the most current school assignment(s)".

26. Photometric plans shall be approved by the Planning, Zoning and Building Department at time of permitting.
27. Landscaped areas shall be irrigated including but not limited to buffer, islands, planter boxes, etc.
28. The mail pickup and delivery system shall be approved by the United States Postal Service.
29. Irrigation plans shall be provided at the time of permitting. Non-potable water shall be used for the irrigation system per Village code.
30. Provide permits from all applicable permitting agencies, including but not limited to, Lake Worth Drainage District, PBC and Village of Palm Springs at the time of permitting.
31. The property owner shall register an Agent of Record, prior to issuance of a permit, to establish a contact person responsible for compliance with this Development Order, including site plan/landscape plan details and conditions of approval.
32. A copy of the NPDES Notice of Intent for Generic Permit shall be submitted to the PZB Department at time of permitting.
33. A stabilized surface shall be provided at all time during construction for access by emergency vehicles.
34. All mechanical equipment's and above-ground infrastructure shall be screened from view.
35. The Applicant may be required to undertake additional security measures, based on the number of complaints or calls for service for incidents at the premises, as determined by the Police Chief. Such additional security measures, as approved by the Police Chief, may include increased on-site security at the operator's sole expense.
36. Verify utility and easement locations to ensure that there are no conflicts with landscaping, revise at time of permitting as needed.
37. All electric utilities shall be underground.
38. A pre-construction meeting shall be scheduled with the Village Planning, Zoning & Building Development Department prior to commencement of any construction activity. Permits are required from the Planning, Zoning & Building Department prior to commencing any construction or renovation. The project shall be constructed in accordance with the FBC edition in effect at the time of permitting.
39. A silt barrier shall be installed around the perimeter of the property (within the affected area for the site improvements and new building construction) prior to commencement of any site work or construction activity, and a track pad shall be installed at the construction entrance(s), both of which shall remain through substantial completion.
40. Any sidewalk broken or damaged during construction shall be replaced by the contractor prior to CO.
41. The Landscaping shall be certified by the Landscape Architect upon completion and prior to Certificate of Occupancy/Certificate of Completion of each improvement area.
42. Absolutely no occupancy, other than construction personnel, is permitted prior to TCO/CO.
43. Photometrics must be certified by an engineer prior to CO.
44. The civil engineer of record shall certify the site construction prior to Certificate of Occupancy.
45. The applicant may be required to provide a resident inspector for structural elements such as concrete pours in accordance with Section 109.1.3 FBC 2010 and F.S. 553.791. Determination shall be made at time of pre-construction conference with Planning Zoning and Building Director.
46. The General Contractor shall be on site during any and all construction activity in accordance with FS 489.1195.
47. The project shall receive approval from all Authorities Having Jurisdiction and submit copies of approvals to the Village of Palm Springs.

48. At the time of CO, the petitioner shall provide the Planning, Zoning and Building Department with electronic copies of as-builts.

49. The School District has requested the Applicant offer a voluntary commitment to make a contribution of $24,465.00 to the School District of Palm Beach County prior to issuance of a building permit, based on School Capacity Availability Determination letter issued on January 7, 2021.

**JUSTIFICATION STATEMENT**
**FLU Map Amendment | Rezoning | Site Plan (Planned Development)**
**Fontana Townhomes**
*Initial Submittal: October 7, 2020*
*Resubmittal: November 23, 2020; December 21, 2020; January 15, 2021*

## REQUEST

On behalf of Meritage Homes of South Florida, the Applicant, WGI is requesting approval of the following:

1) **Future Land Use Map Amendment** from unincorporated Palm Beach County Urban Infill (UI) Future Land Use designation to the Village of Palm Springs High Density Residential Future Land Use.
2) **Rezoning** from unincorporated Palm Beach County UI zoning district to the Village of Palm Springs Residential Multifamily (RM) zoning district as a residential planned development.
3) **Site Plan (Planned Development)** to allow a 59 unit fee-simple townhouse residential planned development.
   - **Waivers** from the following development standards allowed as part of Planned Development Performance Standards:
     i. Drive aisle width adjacent to 90 degree parking.
     ii. Number of sidewalks along a street.
     iii. Minimum Lot Area
     iv. Side Setback

## SITE CHARACTERISTICS

The 4.73 acre subject site, known as "Fontana Townhomes", is located approximately 0.1 miles south of the Davis Road and Lake Worth Road intersection on the west side of Davis Road. It is comprised of two parcels identified by Parcel Control Numbers (PCNs) 70-43-44-30-01-009-0030 and 70-43-44-30-01-009-0040. Both subject parcels retain an unincorporated Future Land Use (FLU) Designation of Urban Infill (UI) and are within the unincorporated UI Zoning district. While the parcels retain unincorporated FLU designations and zoning districts, they were recently annexed into the Village of Palm Springs and are thus under the jurisdiction of the Village of Palm Springs (herein referred to as "the Village"). The subject site is within the Palm Spring's Community Redevelopment Agency (CRA) district boundary and can be further categorized under the Village's Lake Worth Road CRA Subdistrict. The larger of the two parcels is a former recreational facility and is mostly vacant with numerous residual dilapidated facilities/structures remaining. The smaller of the two parcels is presently occupied by a single-family residential dwelling. A map has been provided below which identifies the subject sites location within the Village, as well as an adjacent parcels view which provides greater detail regarding the site characteristics and surrounding areas.

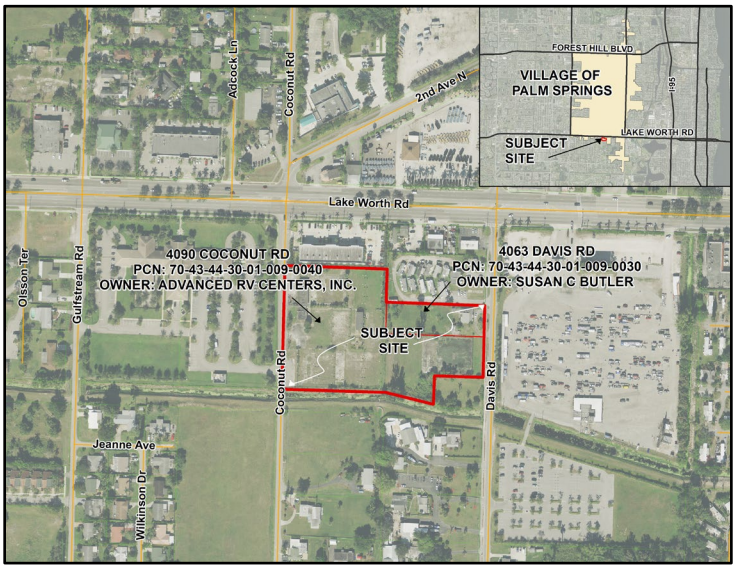

**SURROUNDING PROPERTIES**

The site is surrounded by a mix of uses, including a medical office, multifamily residential, single-family residential, and a flea-market/drive-in movie theater. The mix of surrounding uses adjacent to the subject site can generally be found to be consistent with the proposed development. A summary of the surrounding property information has been provided below.

| | FLU Designation | Zoning District | Existing Use |
|---|---|---|---|
| **North** | CG<br>(Village of Palm Springs) | CG<br>(Village of Palm Springs) | Medical Office |
| | UI<br>(Unincorporated) | UI<br>(Unincorporated) | Mobile Home Park |
| **South** | MR-5<br>(Unincorporated) | RM<br>(Unincorporated) | Vacant/Single-family Residential |
| **East** | CG<br>(Village of Palm Springs) | CG<br>(Village of Palm Springs) | Drive-in Movie Theater/Flea Market |
| **West** | MR-5<br>(Unincorporated) | PO<br>(Unincorporated) | Government Center |

**DEVELOPMENT HISTORY**

As previously mentioned, the subject site was recently annexed into the Village of Palm Springs. The annexation of the subject parcels was adopted in December 2017 and October 2019.

The largest of the two subject site parcels, is approximately four acres and was formerly a recreational facility. Palm Beach County (PBC) Petition Number 73-106, approved by Resolution No. 1973-429 by the PBC Board of County Commissioners (BCC) on August 7th, 1973 approved a Special Exception to allow a Tennis Recreation Facility. It is unclear how long the facility known as the *Lake Worth Racquet Club* was in operations and existed on the parcel, but aerial imagery and ownership information reflects that tennis facility site was no longer in operation by September 2000 as it was purchased by a Place of Worship entity, *Haitian Evangelical Crusade Association, Inc.* Subsequently, based on imagery, after the ownership change, many of the recreational facilities, such as tennis courts and a pool, were partially demolished but still remain on the site today in very poor condition.

According to PBC Planning & Zoning records, there were few inquiries to redevelop the tennis facility, but no formal requests were submitted.

The smaller of the two subject site parcels, is approximately 0.75 acres and presently accommodates a single family dwelling unit. No development history is associated with the single-family parcel other than the building information on file with the County, which indicates the home was built in 1946.

(This space is intentionally left blank.)

**DISTRICT BOUNDARY CHANGES FUTURE LAND USE MAP AMENDMENT/REZONING**

Pursuant to the review requirements provided in Section 34-602.-Land Development Board, the development proposal is consistent with said requirements as outlined below.

***1. A statement of the petitioner's interest in the property to be rezoned, including a copy of the last recorded warranty deed. The following shall also be included, if applicable:***

***(a) If the interest is a joint and several ownership, a written consent to the rezoning petition by all parties of record.***

***(b) If the interest is a contract purchase, a copy of the purchase contract and written consent of the seller/owner.***

***(c) If an authorized agent is involved, a copy of the agency agreement or written consent of the principal/owner.***

***(d) If a lessee is involved, a copy of the lease agreement and written consent of the owner.***

***(e) If a corporation or other business entity is involved, the name of the officer or person responsible for the application and written proof that the representative has the delegated authority to represent the corporation or other business entity, or in lieu thereof, written proof that he is in fact an officer of the corporation.***

***Response:*** The Applicant has provided a copy of the Agency Agreement/written consent from the applicable property owners. A copy of the latest warranty deed applicable to each property owner has been provided for review.

**2. A certified boundary survey by a surveyor registered in the state, at a scale prescribed by the village, containing the following:**

**(a) An accurate legal description of the property to be rezoned.**

**(b) A computation of the total acreage of the tract to the nearest one-tenth of an acre.**

***Response:*** A certified boundary survey by a surveyor registered in the state, at a scale prescribed by the Village has been provided as part of this land Use/district boundary change request. A legal description and computation of the total acreage of the tract to the nearest one-tenth of an acre have been provided within the survey.

**3. The location of the subject parcel, plotted on an official base map, land development map or other acceptable map of the village.**

***Response:*** As identified on Page One of this Justification Statement, a location map of the subject site within the Village has been provided. Furthermore, a radius map and location maps have been included to further identify the location of the subject site.

**4. A property owner's location drawing, showing all properties within 300 feet of the subject property and their relation to the subject parcel.**

***Response:*** As required by the Village to provide adjacent property owner information for Public Hearing applications/notices a location map showing all properties within 300 feet of the subject property and their relation to the subject site has been provided.

**5. A statement of special reasons or the basis for the rezoning request, including the intended use of the property.**

***Response:*** As aforementioned, the subject parcels were recently annexed into the Village however they were never assigned a Village Land Use Designation or Zoning district. This request to allow a high density residential land use and RM zoning are necessary in order for the subject site to remain consistent with the surrounding area and to initiate any sort of development on the subject parcels.

**6. A confirmation of the provisions of all necessary facilities and systems, and attested to by the applicant or authorized agent, for storm drainage, water supply, sewage treatment, solid waste disposal, public safety protection, recreational and park areas, school sites and any other services, where applicable.**

***Response:*** Due to the subject site being previously developed for an intense recreational facility, and also accommodating a residential dwelling unit, adequate provisions of all necessary facilities and systems will be achievable for the subject site.

As part of the required application, coordination has been initiated with the appropriate facilities and system providers in order to confirm adequate provisions can be provided to the subject site. Copies of all correspondence with providers has been included with this submittal, as well as any statements received.

**7. Payment of a filing fee as established by the village.**

***Response:*** The filing fee associated with the Future Land Use Map Amendment and Rezoning portion of the request required by this section have been provided as part of this submittal.

**CONSISTENCY WITH PALM SPRINGS CRA COMMUNITY REDEVELOPMENT PLAN**

As aforementioned, the subject site is within the Palm Springs CRA, under the Lake Worth Road CRA subdistrict. Per the CRA Community Redevelopment Plan, new development applications must demonstrate consistency with the Plan. A description of the development's proposal consistency with the Community Redevelopment Plan can be found below.

**1. Detailed Description of the Proposal's Consistency with Five (5) Key Goals of CRA**

- **I. Improving Utilities and Infrastructure**

  ***Response:*** The development proposal will improve the Utilities and Infrastructure of the area, as improvements are necessary in order to construct the Townhouses.

- **II. Expanding Job Development and Economic Growth**

  ***Response:*** The development proposal will remain consistent with the CRA's key goal to expand job development and economic growth, as it will provide additional residents to supply the workforce and economy of the Village.

- **III. Enhancing Public Safety**

  ***Response:*** The development proposal will enhance public safety, as the subject site is currently abandoned and an ideal area for crime to occur due to its location adjacent to the LWDD canal and separation from Lake Worth Road. The development of buffers, fencing, and additional landscape screening around the perimeter of the subject site will significantly decrease the chance of any crime occurring on this property in the future.

- **IV. Increasing and Maintaining Workforce Housing**

  ***Response:*** While Workforce Housing is not a component of this development proposal, the overall nature of the development program will create an equal opportunity for all Village residents to increase home-ownership. Townhouses offer an affordable entry level homeownership opportunity. More ideal than renting and more achievable than purchasing a single-family residential house, the development proposal will provide much needed home options for residents of the Village.

- **V. Advancing the Partnership with Palm Beach County**

  ***Response:*** The development proposal will advance the partnership with Palm Beach County due to its location within the Hernden Park Countywide Community Revitalization Area (CCRT) neighborhood core area. The Countywide Community Revitalization Area's within Palm Beach County are overseen by the County's Office of Community Revitalization (OCR). This request will require the continued coordination with the County and surrounding Hernden Park residents to ensure the communities needs are met.

**2. Proposal's effect on existing conditions (identified in CRA Community Redevelopment Plan) in the CRA District.**

***Response:*** As evidenced by the Lake Worth Road subdistrict study, the Lake Worth Road subdistrict is currently subject to slum/and or blighted conditions. Some of the existing conditions include faulty lot layout in relation to usefulness, inadequate building density patterns, and incidence of crime in the area higher than in the remainder of the county or municipality. This proposal will improve all of the aforementioned negative existing conditions on the subject site and in turn have an effect on the immediately surrounding area.

**3. Proposal's ability to assist in achieving strategies and objectives of the Palm Springs CRA.**

***Response:*** The development proposal will assist in achieving strategies and objectives of the CRA as it addresses an existing blighted area within the Village. As evidenced by the subdistrict study, the Lake Worth Road subdistrict is subject to slum/and or blighted conditions. The subject site has sat abandoned for many years and allows for an incidence of crime in the area due to its ideal location next to the LWDD canal and separation from Lake Worth Road. Proposing a residential development such as the Fontana Townhomes development will assist in achieving the CRA's strategies to address blighted areas, by improving the area and discouraging criminal traffic.

## DEVELOPMENT PROGRAM

The following outlines the development program for the proposed 59 unit multi-family residential townhouse development:

*Density*
The maximum density for the RM zoning district is 19 DU/AC. The proposed development remains consistent with the district's density regulations as a density of 12.5 DU/AC is proposed.

*Building Height*
Pursuant to Section 34-1064, the maximum height for a building within the residential planned development district shall be the same as allowed in the applicable land development district, or 35 feet, whichever is higher. The proposed RM zoning district and residential planned development height regulation remain consistent with one another, as three stories or 35 feet. The subject site is in compliance with this requirement as the proposed buildings are no more than 35 feet in height.

*Minimum Acreage Requirement*
The Village's code requirements state that all Residential Planned Developments shall be no less than three acres. The subject site is compliant with this requirement as it is 4.73 acres in size.

*Open Space and Common Amenity Area*
Pursuant to Section 34-1064(d) of the Village Code, a residential planned development is required to provide a minimum amount of open space and common amenity area. The minimum total open space requirement for residential planned developments shall be 35 percent of the gross land area, of which 20 percent shall be common amenity area. Based on the standard for required open space, the 4.73 acre subject site is required to provide 1.65 acres of open space. The subject site currently exceeds the code requirement for open space as 2.09 acres or 44 percent of the gross land are proposed to remain as open space. Of the 1.65 acre open space requirement, at least 20 percent of this area must be provided as a common amenity area to all lots such as parks, playgrounds, or other recreational purposes. Based on the open space land area requirement of 1.65 acres the subject site is required to provide 0.31 acres of common amenity area for the proposed community. This requirement is adequately satisfied, as 0.31 acres of common amenity area is proposed central to the community.

*Lot Coverage*
Pursuant to Sec. 34-1064(e)(2), all structures within a Residential Planned Developments shall have a maximum lot coverage of 40%, based on the net area of individual lots. The development proposal is compliant with this requirement as none of the proposed lots exceed 40% lot coverage.

*Access*
The subject site retains double frontage along Coconut Road and Davis Road. Two ingress/egress access points are proposed, one access point from Davis Road and another access point from Coconut Road. The two access points allow for increased circulation and flow of vehicular and pedestrian traffic throughout the subject site.

*Buffering*
Pursuant to Village Code *Article III*, *Section 34-162.-Required Landscaping,* in certain situations the Village requires landscaping around the perimeter of development parcels in order to create a buffer from adjoining land uses, streets and properties. The subject site is in compliance with this section of the Village's code as there is a 10 foot landscape buffer provided around the entirety of the subject site. This proposed perimeter buffer in conjunction with the adjacent properties' buffers will provide screening and will reduce the risk of any potential adverse impacts from the adjacent mobile home park and medical office developments to the north.

*Waivers*
As provided in Subdivision IX.-Planned Developments, the proposed residential planned development is subject to greater flexibility in design and development standards relative to specific dimensional regulations, in order to encourage ingenuity and originality in subdivision and site design while preserving open space to serve recreational, scenic and other public services. Therefore, this Subdivision of the Village's code allows for waivers from certain criteria. The waivers requested for the subject site, relate to the required sidewalk requirements, street width, and side setback requirements. The waiver details of these aforementioned requirements can be found within the subject site's *Conformance with Planned Development Code* section of this Justification Statement.

## CONFORMANCE WITH PLANNED DEVELOPMENT CODE

As required by the Village's Development Application, demonstration must be provided that the proposed residential planned development is in conformance with the Planned Development Code Objectives and Performance Standards provided in Subdivision IX of the Village's Code. An outline of how the project conforms with standards has been provided below.

### *SEC. 41-1062 OBJECTIVES*

1. ***To permit the creation of functional and unique residential, commercial and mixed-use developments that do not adversely impact the village's character and "small town feel".***

   ***Response:*** The proposed residential planned development is in conformance with this objective as the requested residential density of 12.5 dwelling units per acre (DU/AC) is not out of character for the surrounding area. The site is located in close proximity to many commercial services which will provide immediate service to future residents and create a functional balance between non-residential and residential uses. Furthermore, it is compatible with the surrounding residential land use designations to the north, east, south, and west. Therefore, by allowing for the approval of the proposed 59 dwelling unit townhouse development, the Village's "Small Town Feel" will not be adversely impacted.

2. ***To promote building siting that takes into consideration the context of the development, the location of nearby uses, and the new development's compatibility with existing neighborhoods.***

   ***Response:*** The site planning of the subject site took great consideration into the context of the development with the surrounding areas. The subject site's required dry detention areas and recreation area provide a great deal of open space and substantially less intensity, so they have been located adjacent to the southernmost property line which abuts residential on the opposite side of the LWDD L-12 Canal. This siting coupled with the canal along the southern property line provides for the utmost separation possible between the proposed townhouse development and neighboring single family residential.

3. ***To enhance landscaped open space and streetscapes.***

***Response:*** The development proposal is consistent with the aforementioned objective as areas of the subject site will exceed landscaping requirements for open space and streetscapes.

4. ***To bring unique and creative solutions to new development, the following elements should be considered in the context of the specific site, project and/or use:***

   ***a) Arrangement and spacing of buildings and open spaces;***
   ***b) Ability to aggregate adjacent lots or parcels, and/or eliminate nonconformities;***
   ***c) Location of access drive and sidewalks to promote circulation and access;***
   ***d) Building coverage;***
   ***e) Sufficient and convenient parking for uses and activities;***
   ***f) Landscape buffers and screening mechanisms to enhance aesthetics and promote compatibility***
   ***g) Adequate lighting for security and pedestrian/vehicular safety; and***
   ***h) Development of large employment centers predominately of light industrial or high technology uses in underutilized corridors. The flexibility of design should promote revitalization of the primary commercial areas and an economic stimulus through job creation to the local economy as well.***

***Response:*** The development proposal brings unique and creative solutions to new development, by remaining consistent with the aforementioned subobjectives. As previously mentioned, great consideration was given during the site planning of the subject site. The arrangement and spacing of buildings relative to open spaces was considered heavily to remain consistent with requirements such as the common amenity area requirements and to provide a better quality of living for future residents. Furthermore, the development proposal provides for a unique solution to develop a currently underutilized parcel by aggregating an adjacent single-family parcel rather than creating an enclave. As previously stated, the access drives have been located in a way to promote circulation and access of the unique double-frontage site. Each subobjective was weighed heavily as they relate to the specific subject site.

***SEC. 34-1063 PERFORMANCE STANDARDS***

The development proposal conforms with the performance standards for a Planned Development as outlined below.

***Standards:***

1. ***Sidewalks on both sides of a street or primary driveway, interconnected with other pedestrian-ways and/or providing access to each building.***

***Response:*** The development proposal is proposing sidewalks along one side of the street to provide for a greater sense of open space and to utilize the subject site's potential to the greatest extent possible. The Planned Development code requires that sidewalks be required on both sides of the streets. While sidewalks are not provided on both sides of the streets, adequate pedestrian circulation and access throughout the subject site is still achieved through the use of a five foot wide sidewalk and crosswalks throughout. The proposal of one sidewalk rather than two is subject to a waiver.

2. ***Consolidation of smaller parcels into a larger, unified development project.***

***Response:*** As aforementioned, consolidation of smaller parcels into a large, unified development project was incorporated into the planned development proposal. If the request were solely to develop the former tennis facility parcel, this would

result in an enclave of single-family residential. Therefore, the adjacent single-family lot is proposed to be consolidated with the larger parcel in order to provide a unified development and avoid any adverse impacts to the community.

3. ***Consolidation of driveways to eliminate curb cuts, with reciprocal easements for access; provision of access from secondary streets and alleys.***

   ***Response:*** The consolidation of driveways has been provided as evidenced within the provided site plan. Access from secondary streets and alleys is not appropriate for the subject site as Townhouse units are proposed, and the size of the subject site does not allow for the use of alleys and secondary streets.

4. ***Shared parking arrangements to reduce impervious surfaces and promote efficient* use *of facilities.***

   ***Response:*** As required by the Village's Parking Code, the subject site provides guest parking accommodations throughout the subject site. These guest parking locations were intentionally planned to be central to the entire development to promote efficient use by lots. Furthermore, this consideration allows for reduced impervious area as guest parking is not over abundant and throughout all areas of the subject site.

5. ***Provision of sufficient parking to avoid on-street parking, unless designed with on-street spaces.***

   ***Response:*** The subject site retains sufficient parking for the residential units per the Village's Code requirement of 2.5 spaces per unit. Parking spaces are provided for guest parking spaces as required by Village Code; the total parking provided is distributed throughout the development.

6. ***Pedestrian-scale street lighting along sidewalks and pedestrian ways.***

   ***Response:*** Street lighting will be provided along sidewalks and pedestrian-ways to create an appropriate pedestrian scale environment.

7. ***Aggregation of open space to create common areas of sufficient size for passive/leisure activities.***

   ***Response:*** The required 0.31 community amenity area is proposed to remain as one whole area located central to the development. By aggregating the amenity area into one tract rather than multiple smaller tracts throughout the subject site, the land will sufficiently be used for active and passive/leisure activities.

8. ***Continuity of sidewalks and pathways where disconnects occur; and provision of sidewalks to usable open spaces, recreation amenities or public facilities.***

   ***Response:*** As previously mentioned, crosswalks will be provided throughout the subject site to provide continuity of sidewalks and pathways where disconnects occur. The subject site has an extensive pedestrian circulation pattern which allows uninterrupted circulation from usable open spaces, recreation amenities, public facilities, and individual lots.

9. ***Residential setbacks that allow for a green, semi-private planting area between the sidewalk and house(s).***

   ***Response:*** The provided setbacks are proposed to allow for a green, semi-private planting area between the sidewalk and houses. Appropriate foundation planting has been planned to be incorporated into the individual lots.

10. ***Promote streetscape where feasible, with maintenance agreements assigning responsibility to adjacent properties.***

    ***Response:*** Streetscape is promoted throughout the subject site where feasible. This will be achieved through the use of pedestrian scale lighting, as previously mentioned, and by proposing appropriate landscaping to provide adequate streetscape.

11. ***Create bus waiting areas for safety, for school buses or mass transit, as may be applicable.***

    ***Response:*** As coordinated with Palm Beach County School Board, a 10'x15' school bus shelter has been provided along Davis Road.

12. ***Building stepbacks or setbacks to respect existing scale and massing of adjacent neighborhoods and promote compatibility.***

    ***Response:*** As aforementioned, the site was planned to provide the greatest amount of separation as possible from the least intense adjacent uses to the south. Much of the structures are massed closer to the northern boundary as the adjacent uses and structures are more compatible with the proposed townhouse structures.

13. ***Provision of original, self-confident building design, and prohibition of metal buildings.***

    ***Response:*** Metal buildings are not proposed as part of this development proposal. Original, self-confident building design is provided as the townhouse buildings are proposed to be contemporary modern.

14. ***Buffers between differing uses to include a masonry wall and landscaping to promote compatibility.***

    ***Response:*** As depicted in the site photos provided with this submittal, a masonry wall currently exists along the adjacent commercial property line to the north of the subject site. This wall is proposed to remain as is to provide further screening from the medical office use and to promote compatibility. As previously mentioned, a perimeter landscape buffer is proposed in conjunction with the neighboring medical office's landscape buffer to provide the utmost screening as possible.

15. ***Adequate vehicular circulation, traffic maintenance and/or operational measures that does not negatively impact existing roadway conditions, including avoidance of dead-end streets and t-style turnarounds.***

    ***Response:*** As aforementioned, the subject site is proposed to provide adequate vehicular circulation that does not negatively impact existing roadway conditions, including avoidance of dead-end streets and t-style turn arounds. Rather than providing access along one road, access along both frontages of the double frontage subject site is provided to negate the increased need for dead-end streets and t-style turn arounds that is commonly found in development patterns today.

## ***WAIVERS***

Pursuant to the Planned Development Performance standards of the Village's Code, the Applicant may utilize waivers to promote the use of innovative and creative techniques and concepts. As previously mentioned, waivers are requested for the development proposal to allow relief from certain requirements. The waivers requested have been outlined within the table below and meet the waiver criteria as identified within this *Waivers* section.

| Waiver | Subject | Code Section | Required | Proposed | Deviation |
|---|---|---|---|---|---|
| 1. | Street width adjacent to 90 degree parking | Sec. 34-1328 | 26’ wide drive aisle when adjacent to parking | 20’ wide drive aisle when adjacent to parking | -6’ |
| 2. | Sidewalk | Sec. 34-1063(a)(1) | Sidewalk along both sides of Street | Sidewalk along one side of street | Single-sided sidewalk |
| 3. | Side Setback | Sec. 34-1064(e)(1)(b) | 20’ | 15’ | -5’ |
| 4. | Min. Lot Area | Sec. 34-766(1) | 547,000 SF / 12.55 AC. | 205,881 SF / 4.73 AC. | -341,119 SF / -7.83 AC. |

1. ***The request is in harmony with and is consistent with the purpose and intent of the Village's Comprehensive Plan and* Land *Development Code and that such waiver will not be injurious to the area involved or otherwise detrimental to the public health, safety, and welfare.***

***Waiver 1 Response:*** The request to allow a 20’ wide drive aisle when adjacent to 90 degree parking is in harmony and is consistent with the purpose and intent of the Village’s Comprehensive Plan and Land Development Code. The majority of the subject site is compliant with the required drive aisle dimensions, however there are seven 90 degree parking spaces in a portion of the site which require a 26’ wide drive aisle. This waiver will not be injurious to the area involved, as traffic can still safely maneuver into and out of the parking spaces.

***Waiver 2 Response:*** The request to allow a sidewalk along one side of the street where a sidewalk is required along both sides will not be injurious to the area involved or otherwise detrimental to the public health, safety, and welfare. As previously stated, this waiver will allow for greater flexibility in site design and adequate pedestrian connectivity will be provided.

***Waiver 3 Response:*** The request to allow a reduced side setback is consistent with the purpose and intent of the Village’s Comprehensive Plan and Land Development Code, and will not be injurious to the area involved or otherwise detrimental to the public health, safety, and welfare. The subject area of this request is specific to lot 52, which is along the northern portion of the site. It is screened by the adjacent northern property by a 10’ landscape buffer and existing 6’ concrete wall. The request also applies to lots 14 and 15, along the southern portion of the site, adjacent to the LWDD L-12 Canal. These lots are screened by a 10’ landscape buffer with a 5’ vinyl fence.

***Waiver 4 Response:*** The request to allow a reduced lot size from the required minimum lot requirements is outside of the Applicant’s control and will not affect the public health safety, and welfare.

***2. The request results from innovative design in which other minimum standards are exceeded.***

***Waiver 1 Response:*** The request to allow a reduced drive aisle width when adjacent to 90 degree parking results from innovative design in which other minimum standards are exceeded. The subject site is compliant with the required drive aisle width in all other areas.

***Waiver 2 Response:*** The request to allow a sidewalk along one side of the street where a sidewalk is required along both sides will not be injurious to the area involved or otherwise detrimental to the public health, safety, and welfare. As previously stated, this waiver will allow for greater flexibility in site design and adequate pedestrian continuity will be provided.

***Waiver 3 Response:*** The request to allow a reduced side setback distance results from innovative design in which other minimum standards are exceeded. The areas of focus for the reduced side setback, currently propose landscaping above code requirements and provide an existing 6' concrete wall and 5' vinyl fence.

***Waiver 4 Response:*** The request to allow a reduced lot size is not the result of innovative design. The lot is predisposed to be smaller than the required minimum and is outside of the control of the applicant.

***3. The request demonstrates that granting of the waiver will result in preservation of valuable natural resources, including drainage and recharge areas, natural areas, etc.***

***Waiver 1 Response:*** The granting of the waiver request related to reduced drive aisle width will result in the preservation of valuable natural resources. A narrower street width equates to less impervious area, as a result this will help preserve valuable natural resources.

***Waiver 2 Response:*** The granting of the waiver request will result in the preservation of valuable natural resources, including drainage and recharge areas, and natural areas. As aforementioned, by negating the requirement for an extra sidewalk, this will allow for increased pervious areas throughout the subject site.

***Waiver 3 Response:*** The reduced side setback will result in the preservation of valuable natural resources. This will be achieved, as the reduced setback will allow for greater design freedom and allow for more opportunity to preserve natural resources.

***Waiver 4 Response:*** The request to allow a reduced lot size will not result in preservation of valuable natural resources. The lot is predisposed to be smaller than the required minimum and is outside of the control of the applicant.

***4. The request demonstrates public benefits to be derived, including but not limited to such benefits as dedication of rights-of-way, extensions of pedestrian linkages outside of the project boundaries, preservation of open areas and* use *of desirable architectural, building, and site design techniques.***

***Waiver 1 Response:*** The request will demonstrate public benefits such as desirable site design techniques. By allowing for a narrower drive aisle adjacent to parking spaces, there is room for more pervious area and potential open spaces. This will create a more desirable community for future residents.

***Waiver 2 Response:*** The request will demonstrate public benefits such as extension of pedestrian linkages outside of the project boundaries. The subject site is located in an ideal area with close proximity (less than 300 feet) to the Lake Worth Road Corridor. The proposed sidewalk network will connect to the existing Davis Road sidewalk and allow walkability to the surrounding areas and services.

***Waiver 3 Response:*** The waiver request will demonstrate public benefits such as desirable site design techniques and right-of-way dedication to the LWDD L-12 Canal. By allowing for a reduced side setback, the subject site will have more design freedoms to provide increased open space and additional drainage.

***Waiver 4 Response:*** The request to allow a reduced lot size does not demonstrate public benefits to be derived. The lot is predisposed to be smaller than the required minimum and is outside of the control of the applicant.

***5. The request provides sufficient screening and buffering to screen adjacent* uses *from adverse impacts caused by the granting of a waiver.***

***Waiver 1 Response:*** The request will not jeopardize the screening of the subject site as it relates to a decreased drive aisle width in a specific portion of the site.

***Waiver 2 Response:*** This waiver request is specific to the pedestrian sidewalks within the subject site and would not adversely impact adjacent properties. However, appropriate landscape buffering and screening is provided.

***Waiver 3 Response:*** The waiver request will provide sufficient screening and buffering to screen adjacent uses from any adverse impacts created by the reduced side setback. This reduced setback is specific to two areas of the subject site, which propose landscaping above code requirements and provide an existing 6' concrete wall and 5' vinyl fence.

***Waiver 4 Response:*** The waiver does not generate any adverse impacts related to adjacent properties, however, the Applicant will sufficiently screen and buffer the property.

***6. Economic issues may not be* used *to justify waivers.***

***Waiver Response:*** Economic issues are not used as a justification for these requests.

***7. The request is compatible with existing and potential* land uses *adjacent to the development site.***

***Response:*** The request is consistent with the existing and potential land uses adjacent to the development site. A majority of the surrounding uses are residential communities which either provide one sidewalk or no sidewalks. There is a sidewalk along Davis Road which the subject site's sidewalk system will connect to. Overall, a waiver request for a decreased street width, single sidewalk, reduced side setback, and minimum lot area will not generate compatibility issues.

***8. Waiver requests from minimum common amenity area requirements shall further demonstrate that adequate recreation area is available in the immediate vicinity of the proposed development.***

***Response:*** This criterion is not applicable as a waiver is not requested from the common amenity area requirements. The development proposal provides adequate community amenity area.

9. ***Waiver requests from maximum height limitations shall further demonstrate that the additional height will not adversely impact adjacent properties and appropriate setbacks are provided as building height increases.***

***Response:*** This criterion is not applicable as a waiver is not requested from the height limitation requirements. The development proposal is currently under the maximum height threshold of three stories or 35 feet.

**CONCLUSION**

***Based on the above justification and attached information, the petitioner respectfully requests approval of the Future Land Use Map Amendment, Rezoning, and Site Plan to allow a Residential Planned Development application for the subject site.***

## SITE DATA

| | |
|---|---|
| GROSS SITE AREA | 4.73 AC. |
| NET SITE AREA | 4.48 AC. |
| TOTAL PROPOSED UNITS (TOWNHOME) | 59 D.U. |
| GROSS DENSITY | 12.5 D.U./AC. |
| OPEN SPACE REQUIRED | 1.57 AC.(35%) |
| OPEN SPACE PROVIDED | 1.87 AC.(41%) |
| COMMON AMENITY REQUIRED/PROVIDED | 0.31 AC.(20% OF OPEN SPACE) |
| DRY DETENTION AREA | 0.36 AC. |

COCONUT ROAD

DAVIS ROAD

DRY DETENTION
0.32 AC.

DRY DETENTION
0.04 AC.

RECREATION AREA
0.31 AC.

TOT LOT

# Fontana Townhomes

Site Plan Graphic

N

0′ 15′ 30′ 60′ 90′

SCALE: 1″ = 30′-0″

WGI

LAKE WORTH RD

USE: MEDICAL CENTER
FLU: N/A
ZONING: CG

LIFT STATION

8'x6' PATIO (TYP.)

10' BUFFER

S88° 03' 57"E 317.32'

O.S.T.

EX. 6' CONC. WALL

15' (SEE WAIVER CHART)

8' VINYL FENCE

10' BUFFER

6' VINYL FENCE (TYP.)

USE: RESIDENTIAL
FLU: N/A
ZONING: UI

BUILDING 9 (7 UNITS)

BUILDING 8 (8 UNITS)

BUILDING 7 (6 UNITS)

BUILDING 6 (6 UNITS)

BUILDING 5 (6 UNITS)

BUILDING 4 (6 UNITS)

BUILDING 3 (6 UNITS)

BUILDING 2 (7 UNITS)

BUILDING 1 (7 UNITS)

15' ROW DEDICATION

15' ROW
DB. 352, PG. 165

COVERED ENTRY, TYP.
1 CAR GARAGE, TYP.

6' VINYL FENCE

30' R.O.W.

10' U.E.

5' S/W

32' ROW

N88° 03' 57"W 211.33

2' VALLEY GUTTER, TYP.

4' SEPARATION

ENTRANCE SIGN

10' SIGN S.B.

USE: SERVICE CENTER
FLU: MR-5
ZONING: PO

COCONUT RD

N01° 27' 04"E 393.30'

DAVIS RD

S01° 26' 48"W 230.91'

MAIL KIOSK

15' D.E.

18' TYP.

S88° 02' 58"E 408.29

MAIN ENTRANCE

40'

10' ROW DEDICATION

ENTRANCE SIGN

11' SIGN S.B.

EX. O.H.E.

10'x15' BUS SHELTER

USE: OUTDOOR MARKET
FLU: N/A
ZONING: CG

0.32 AC.
DRY DETENTION

DRY DETENTION
0.04 AC.

S01° 26' 48"W 107.39'

S01° 26' 48"W 95.87'

S01° 26' 48"W 167.26'

S01° 26' 48"W 107.25'

S01° 26' 48"W 86.70'

N88° 01' 48"W 141.84'

0.31 AC.
REC AREA

BENCHES & TRASH RECEPTACLE

SHADE STRUCTURE W/ PICNIC TABLE & TRASH RECEPTACLE

SPRING RIDERS

6' VINYL FENCE (TYP.)

5' PATH

10' PIPE EASEMENT (T.B.A.)
ORB. 2204 PB. 1150

15' (SEE WAIVER CHART)

S01° 26' 48"W 86.70'

15' (SEE WAIVER CHART)

10' BUFFER

5' LWDD DEDICATION

5' VINYL FENCE

N75° 55' 18"W 23.86'

N88° 01' 05"W 14.32'

4 SEAT SWING SET

N75° 55' 18"W 125.36'

ENGINEERED WOOD FIBER SURFACE

2 SEAT SEESAW

SPORTS FIELD/
LAWN GAMES AREA

ADDITIONAL RIGHT OF WAY
ORB. 2806 PG. 1202

LWDD L-12 CANAL
ROAD PLAT BOOK 2, PG. 101
CANAL RIGHT OF WAY
ORB. 589, PG. 369

LWDD L-12 CANAL

USE: RESIDENTIAL (SINGLE FAMILY)
FLU: MR-5
ZONING: RM

REQUIRED RIGHT OF WAY
PER: LAKE WORTH DRAINAGE DISTRICT
RIGHT OF WAY MAP
LATERAL CANAL NO. 12
JOB:64-122
SHEET 43, PG. 240

## LOCATION MAP

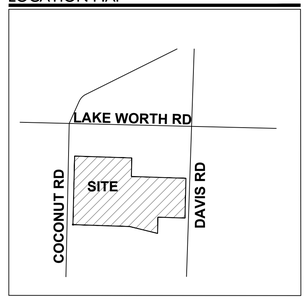


N

0 20 40 80

SCALE: 1" = 40'

## SITE DATA

| | |
|---|---|
| APPLICATION NAME | FONTANA TOWNHOMES |
| EXISTING LAND USE DESIGNATION (PBC) | UI |
| PROPOSED LAND USE DESIGNATION (VILLAGE) | HIGH DENSITY RESIDENTIAL |
| EXISTING ZONING DISTRICT (PBC) | UI |
| PROPOSED ZONING DISTRICT (VILLAGE) | RM/PUD |
| PCN | 70-43-44-30-01-009-0040 |
| | 70-43-44-30-01-009-0030 |
| EXISTING USE | SINGLE FAMILY/VACANT |
| PROPOSED USE | TOWNHOME RESIDENTIAL |
| GROSS SITE AREA | 4.73 AC. |
| NET SITE AREA | 4.48 AC. |
| TOTAL PROPOSED UNITS (TOWNHOME) | 59 D.U. |
| GROSS DENSITY | 12.5 D.U./AC. |
| OPEN SPACE REQUIRED | 1.57 AC.(35%)* |
| OPEN SPACE PROVIDED | 1.87 AC.(41%) |
| PROPOSED PERVIOUS | 2.23 AC.(47.1%) |
| PROPOSED IMPERVIOUS | 2.50 AC.(52.9%) |
| COMMON AMENITY REQUIRED/PROVIDED | 0.31 AC.(20% OF OPEN SPACE) |
| DRY DETENTION AREA | 0.36 AC. |
| TOTAL PARKING REQUIRED | 185 SP. |
| RESIDENTIAL PARKING REQUIRED (2.5 SP./D.U.) | 148 SP. |
| GUEST SPACES REQUIRED (25% OF REQ. SP.) | 37 SP. |
| TOTAL PARKING PROVIDED | 185 SP. |
| GARAGE SPACES | 59 SP. |
| DRIVEWAY SPACES | 118 SP. |
| GUEST SPACES | 8 SP. |
| BUILDING HEIGHT | 30' MAX |
| TRAFFIC ANALYSIS ZONE (TAZ) | 362 |

*CALCULATION BASED ON NET SITE AREA

## PROPERTY DEVELOPMENT REGULATIONS (TOWNHOMES)

| ZONING DISTRICT (RM) | MAX BLDG COVER | MIN. SETBACKS | | | |
|---|---|---|---|---|---|
| | | FRONT | SIDE INT. | CORNER STREET | REAR |
| REQUIRED | 40% | 25' | 20' | 25' | 20' |
| PROPOSED | 24% | 20' | 15*** | N/A | N/A |

NOTE: PROPERTY DEVELOPMENT REGULATIONS TAKEN FROM PERIMETER OF DEVELOPMENT.
** SEE WAIVER CHART

## WAIVER CHART

| WAIVER SUBJECT | CODE SECTION | REQUIRED | PROPOSED | DEVIATION |
|---|---|---|---|---|
| PARKING DRIVE AISLE | 34-1328 | 26' | 20' | -6' |
| SIDEWALK | 34-1063(a)(1) | SIDEWALK ON BOTH SIDES OF STREET | SIDEWALK ON ONE SIDE OF STREET | SINGLE SIDEWALK |
| SIDE SETBACK | 34-1064(e)(1)(b) | 20' | 15' | -5' |
| MIN. LOT AREA | 34-766(1) | 547,000 SF / 12.55 AC. | 205,881 SF / 4.73 AC. | 341,119 SF / 7.83 AC. |

## LEGEND

AC. = ACRES
D.E. = DRAINAGE EASEMENT
DRO = DEVELOPMENT REVIEW OFFICERS
D.U. = DWELLING UNITS
EX. = EXISTING
FLU = FUTURE LAND USE
M = MODEL UNIT
O.H.E. = OVERHANG EASEMENT
O.R.B. = OFFICIAL RECORD BOOK
O.S.T. = OPEN SPACE TRACT
P = POSTAL DELIVERY PARKING
P.B. = PLAT BOOK
PDR = PROPERTY DEVELOPMENT REGULATIONS
PG. = PAGE
R = RADIUS
R.O.W. = RIGHT-OF-WAY
S.B. = SETBACK
S/W = SIDEWALK
S.F. = SQUARE FEET
T.B.A. = TO BE ABANDONED
TYP = TYPICAL
TH = TOWNHOME
U.E. = UTILITY EASEMENT


WGI
2035 Vista Parkway, West Palm Beach, FL 33411
Phone No. 866.909.2220 www.wginc.com
Cert No. 6091 - LB No. 7055


REVISIONS

| NO. | DATE | DESCRIPTION | BY |
|---|---|---|---|
| 1 | 2020-10-07 | INITIAL SUBMITTAL | CB |
| 2 | 2020-11-20 | RESUBMITTAL | CB |
| 3 | 2020-12-21 | RESUBMITTAL | CB |
| 4 | 2020-1-15 | RESUBMITTAL | CB |
| 5 | 2020-2-24 | RESUBMITTAL | CB |

CAD 5407\01-PLANS\5407701-PA-SITEDWG
JOB NO. 5407.01
DRAWN BY R.C.
CHECK BY J.P.
DATE 8/27/2020

# FONTANA TOWNHOMES
# VILLAGE OF PALM SPRINGS
## SITE PLAN

SHEET:
SP-1


Christian Bryant C:\Users\chrisg\AppData\Local\Temp\acpublish_bryant\5407701-PA_SITE.dwg — Printed: 2/24/2021 2:15:41 PM Saved: 2/24/2021 1:41:48 PM

## TYPICAL UNIT DETAILS

SCALE: NTS

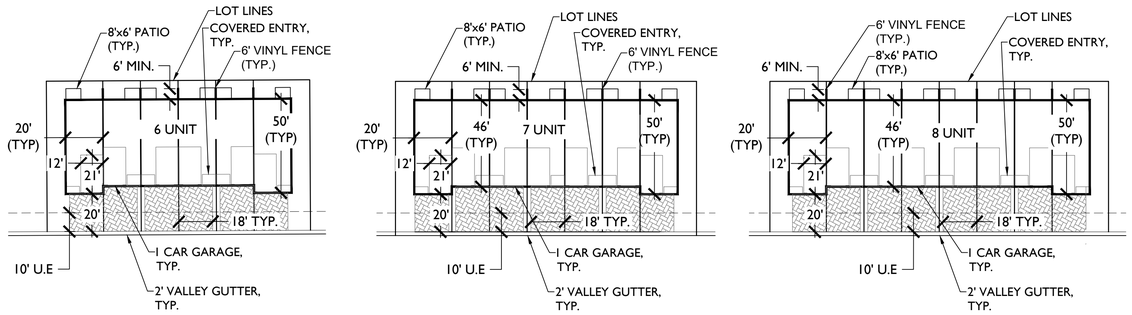


## ENTRANCE SIGN DETAIL

SCALE: NTS

SIGN REQUIREMENTS:

- MAXIMUM 8' SIGN HEIGHT.

- MAXIMUM 150' SQUARE FEET SIGN AREA.




## OPEN SPACE PLAN EXHIBIT

SCALE: NTS




WGI
2035 Vista Parkway, West Palm Beach, FL 33411
Phone No. 866.909.2220 www.wginc.com
Cert No. 6091 - LB No. 7055

REVISIONS

| NO. | DATE | DESCRIPTION | BY |
|---|---|---|---|
| 1 | 2020-10-07 | INITIAL SUBMITTAL | CB |
| 2 | 2020-11-20 | RESUBMITTAL | CB |
| 3 | 2020-12-21 | RESUBMITTAL | CB |
| 4 | 2020-1-15 | RESUBMITTAL | CB |
| 5 | 2020-2-24 | RESUBMITTAL | CB |

| | |
|---|---|
| CAD 5407/01-PL-SITE.DWG | |
| JOB NO. | 5407.01 |
| DRAWN BY | R.C. |
| CHECK BY | J.P. |
| DATE | 8/27/2020 |

**FONTANA TOWNHOMES**
**VILLAGE OF PALM SPRINGS**
REGULATING PLAN

SHEET:
RP-1

Christian Bryant C:\pwworking\wgi\christian.bryant\d0899203\5407.01-PL-SITE.dwg — Plotted: 2/24/2021 2:10:44 PM Saved: 2/24/2021 1:41:48 PM

## REC. AREA DETAIL

SCALE: NTS

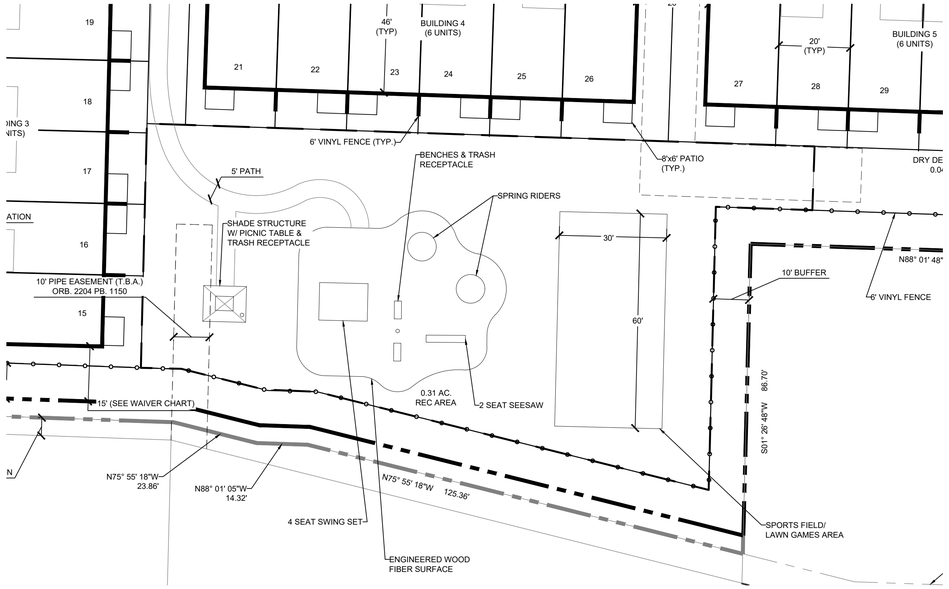


## FENCE EXHIBIT DETAIL

SCALE: NTS

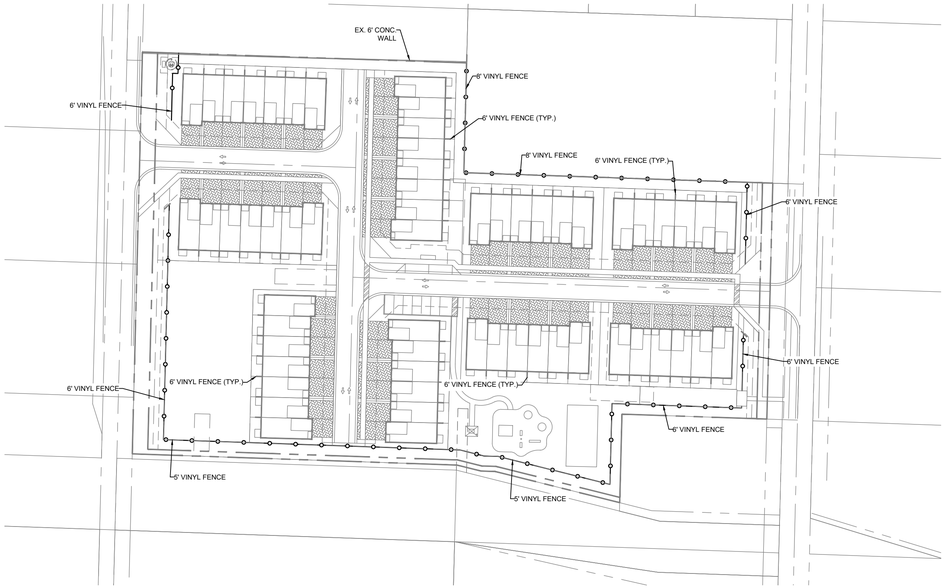


## PERVIOUS / IMPERVIOUS PLAN EXHIBIT

SCALE: NTS





WGI
2035 Vista Parkway, West Palm Beach, FL 33411
Phone No. 866.909.2220 www.wginc.com
Cert No. 6091 - LB No. 7055


REVISIONS

| NO. | DATE | DESCRIPTION | BY |
|---|---|---|---|
| 1 | 2020-10-07 | INITIAL SUBMITTAL | CB |
| 2 | 2020-11-20 | RESUBMITTAL | CB |
| 3 | 2020-12-21 | RESUBMITTAL | CB |
| 4 | 2020-1-15 | RESUBMITTAL | CB |
| 5 | 2020-2-24 | RESUBMITTAL | CB |

| | |
|---|---|
| CAD 5407001-PL-SITE.DWG | |
| JOB NO. | 5407.01 |
| DRAWN BY | R.C. |
| CHECK BY | J.P. |
| DATE | 8/27/2020 |

**FONTANA TOWNHOMES**
**VILLAGE OF PALM SPRINGS**
**REGULATING PLAN**

SHEET:
RP-2


Drawn By:ef C:\wgi\working\jpf\christian bryant\5400\5407001\5407001-PL-SITE.dwg — Plotted: 2/24/2021 2:10:47 PM Saved: 2/24/2021 1:41:48 PM

LOCATION MAP

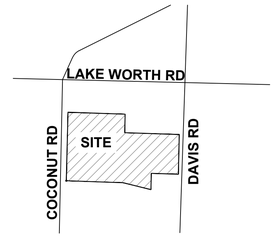


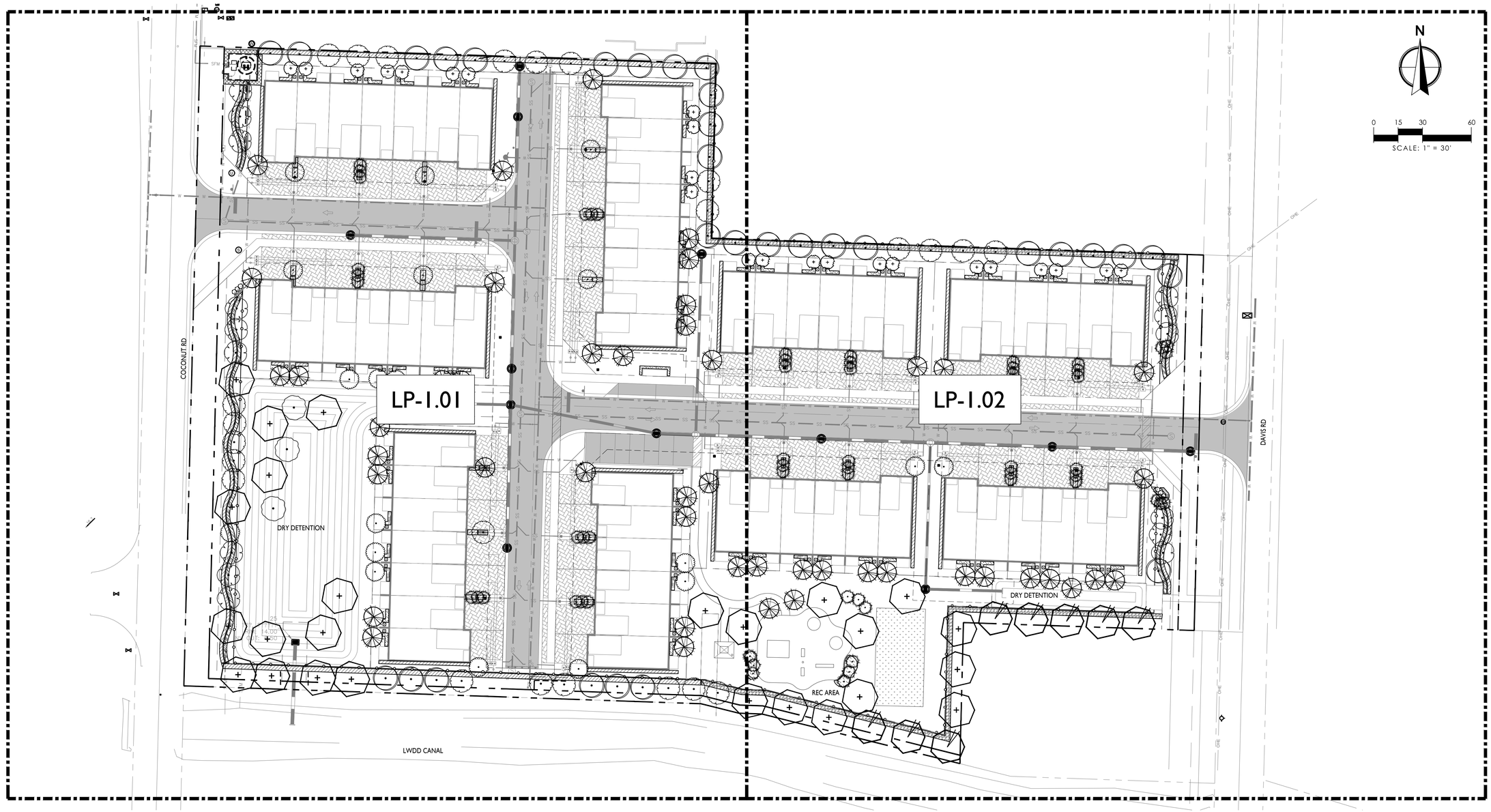


WGI
2035 Vista Parkway, West Palm Beach, FL 33411
Phone No. 866.909.2220 www.wginc.com
Cert No. 6091 - LB No. 7055

| NO | DATE | DESCRIPTION | BY |
|---|---|---|---|
| 1 | 11-20-2020 | RESUBMITTAL | BJ |
| 2 | 12-21-2020 | RESUBMITTAL | BJ |
| 3 | 01-15-2021 | RESUBMITTAL | BJ |
| 4 | 02-24-2021 | RESUBMITTAL | BJ |

REVISIONS

| | |
|---|---|
| CAD 5407001-LP.DWG | |
| JOB NO. | 5407.01 |
| DRAWN BY | BJ/LC/DN |
| CHECK BY | TM |
| DATE | 10/07/2020 |

LANDSCAPE ARCHITECT OF RECORD
TIFFANY DELYNN MAY
FL# LA6667274

DAVIS ROAD PROPERTY
PALM SPRINGS, FL

**OVERALL LANDSCAPE PLAN**

SHEET:
LP-1.00

Bryan Jackman C:\pworkcing\bjackman\d1868616\5407001-LP.dwg, pdf Plotted: 2/24/2021 5:08:02 PM Saved: 2/24/2021 3:24:56 PM

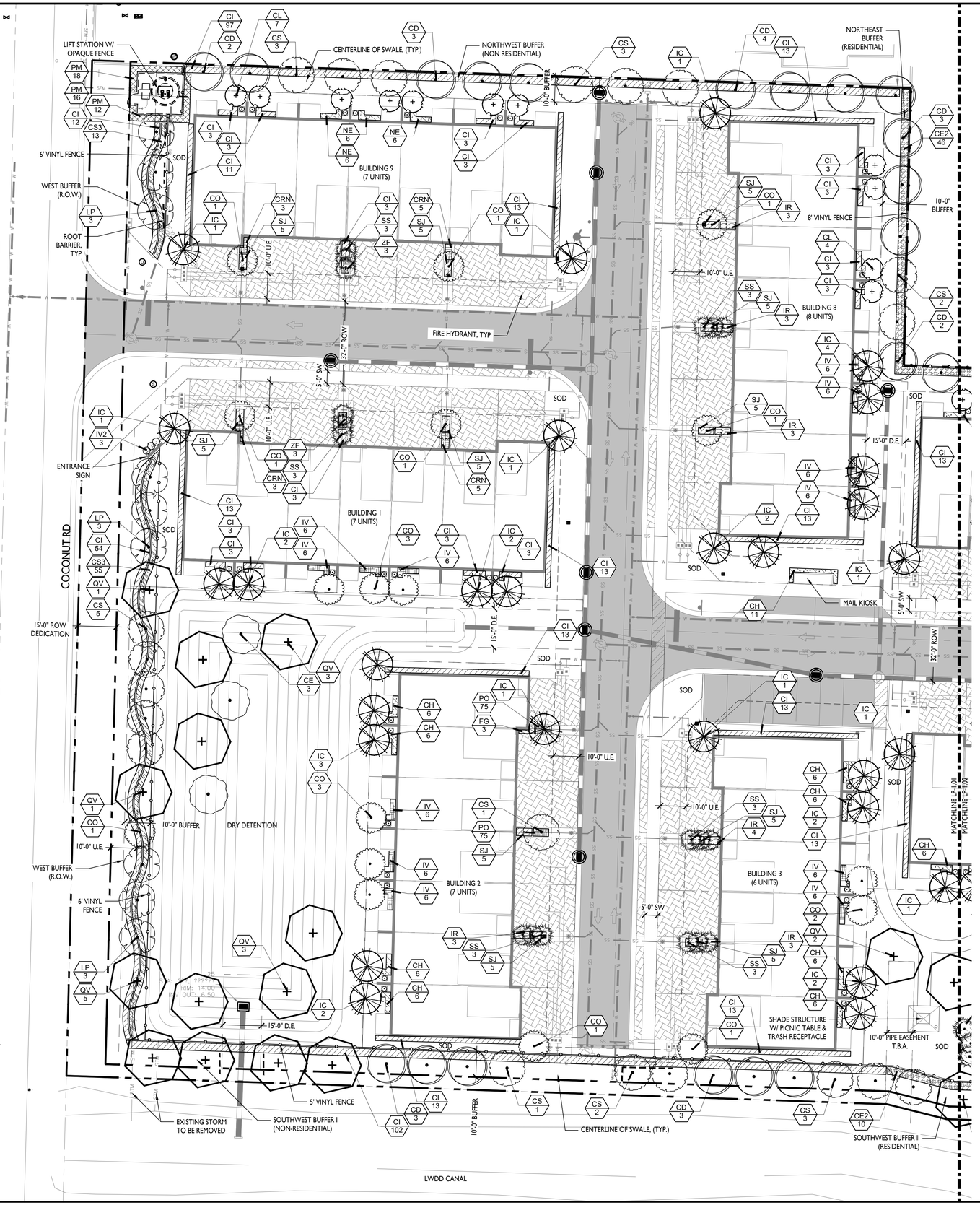


## SHEET KEY MAP

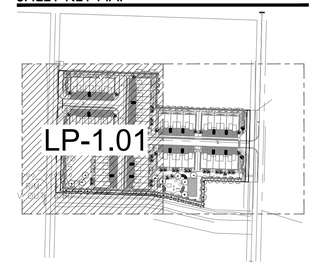


N

0 10 20 40

SCALE: 1" = 20'

## LANDSCAPE REQUIREMENTS

PALM SPRINGS, FLORIDA

| PERIMETER LANDSCAPING | REQUIRED | PROVIDED |
|---|---|---|
| LOCAL/ PRIVATE R.O.W. BUFFER | | |
| CATEGORY 6 STANDARD - 10' BUFFER<br>1 CANOPY TREE PER 20 LINEAR FEET AND A MEANDERING 3' HEDGE WITH 2 TIERS | WEST BUFFER<br>360 LF / 20 = 18 TREES AND A MEANDERING 3' HEDGE WITH 2 TIERS<br><br>EAST BUFFER<br>200 LF / 20 = 10 TREES AND A MEANDERING 3' HEDGE WITH 2 TIERS | WEST BUFFER<br>18 TREES<br>AND A MEANDERING 3' HEDGE WITH 2 TIERS<br><br>EAST BUFFER<br>10 TREES (8 TREES AND 6 PALMS @ 3:1)<br>AND A MEANDERING 3' HEDGE WITH 2 TIERS |
| RESIDENTIAL BUFFER | | |
| CATEGORY 2 STANDARD - 10' BUFFER<br>1 CANOPY TREE PER 20 LINEAR FEET<br>WALL/FENCE AND 4' HEDGE AT TIME OF PLANTING | NORTHEAST BUFFER<br>410 LF / 20 = 21 TREES<br><br>SOUTHWEST BUFFER II<br>160 LF / 20 = 8 TREES | NORTHEAST BUFFER<br>21 TREES AND 4' HEDGE AT TIME OF PLANTING*<br><br>SOUTHWEST BUFFER II<br>8 TREES AND 4' HEDGE AT TIME OF PLANTING*<br><br>*WALL/FENCE IS NOT DEEMED NECESSARY FOR THESE SMALL PORTIONS OF THE SITE |
| NONRESIDENTIAL BUFFER | | |
| NON-VEHICULAR USE AREAS -<br>PERIMETER LANDSCAPING ALONG BOUNDARY<br>1 TREE PER 25 LF | NORTHWEST BUFFER<br>317 LF / 25 = 13 TREES<br><br>SOUTHWEST BUFFER I<br>317 LF / 25 = 13 TREES<br><br>SOUTHEAST BUFFER<br>225 LF / 25 = 8 TREES | NORTHWEST BUFFER<br>14 TREES<br><br>SOUTHWEST BUFFER I<br>14 TREES<br><br>SOUTHEAST BUFFER<br>8 TREES |
| **INTERIOR LANDSCAPING** | **REQUIRED** | **PROVIDED** |
| FOUNDATION PLANTING | | |
| AT LEAST 1 TREE OR CLUSTER OF 3 PALMS SHALL BE INSTALLED FOR EACH 30 LF OF BUILDING FACADE FACING A STREET | 6 UNIT BUILDING<br>120 LF/ 30 = 4 TREES AT STREET FACADE FOR EACH BUILDING<br><br>7 UNIT BUILDING<br>140 LF/ 30 = 5 TREES AT STREET FACADE FOR EACH BUILDING<br><br>8 UNIT BUILDING<br>160 LF/ 30 = 6 TREES AT STREET FACADE FOR EACH BUILDING | 6 UNIT BUILDING<br>4 TREES FOR EACH BUILDING<br>(2 TREES AND 6 PALMS @ 3:1)<br><br>7 UNIT BUILDING<br>MIN. 5 TREES FOR EACH BUILDING<br>(4 TREES AND 3 PALMS @ 3:1)<br><br>8 UNIT BUILDING<br>6 TREES FOR EACH BUILDING<br>(5 TREES AND 3 PALMS @ 3:1) |
| RESIDENTIAL PARCEL - TREE PLANTING | | |
| 1 TREE PLANTED FOR EVERY 2,500 SF OF A PARCEL USED FOR NON RESIDENTIAL PURPOSES | 6 UNIT BUILDING<br>11,300 SF / 1,500 SF = 8 TREES FOR EACH BUILDING<br><br>7 UNIT BUILDING<br>12,540 SF / 1,500 SF = 9 TREES FOR EACH BUILDING<br><br>8 UNIT BUILDING<br>14,715 SF / 1,500 SF = 10 TREES FOR EACH BUILDING | 6 UNIT BUILDING<br>10 TREES FOR EACH BUILDING<br>(8 TREES AND 6 PALMS @ 3:1)<br><br>7 UNIT BUILDING<br>12 TREES FOR EACH BUILDING<br>(11 TREES AND 3 PALMS @ 3:1)<br><br>8 UNIT BUILDING<br>14 TREES FOR EACH BUILDING<br>(13 TREES AND 3 PALMS @ 3:1) |
| NON-RESIDENTIAL PARCEL - TREE PLANTING | | |
| 1 TREE PLANTED FOR EVERY 2,500 SF OF A PARCEL USED FOR NON RESIDENTIAL PURPOSES | WEST DETENTION AREA<br>19,141 SF / 2,500 SF = 8 TREES<br><br>REC AREA<br>14,175 SF / 2,500 SF = 6 TREES<br><br>EAST DRY DETENTION AREA<br>1,961 SF / 2,500 SF = 1 TREE | WEST DETENTION AREA<br>9 TREES<br><br>REC AREA<br>11 TREES (8 TREES AND 9 PALMS @ 3:1)<br><br>EAST DETENTION AREA<br>1 TREE |

## PLANT SCHEDULE OVERALL

| TREES | QTY | COMMON NAME | BOTANICAL NAME | NATIVE | REMARKS |
|---|---|---|---|---|---|
| BS | 8 | Gumbo Limbo | Bursera simaruba | YES | 12` HT X 5` SPRD, MIN 2" CAL |
| CL | 23 | Spiny Fiddlewood | Citharexylum spinosum | YES | 12` HT X 5` SPRD, 2" CAL, 5` CT |
| CD | 31 | Pigeon Plum | Coccoloba diversiolia | YES | 12` HT X 5` SPRD, MIN 2" CAL |
| CE | 3 | Green Buttonwood | Conocarpus erectus | YES | 12` HT X 5` SPRD, MIN 2" CAL |
| CS | 24 | Silver Buttonwood | Conocarpus erectus sericeus | YES | 12` HT X 5` SPRD, MIN 2" CAL |
| CO | 19 | Orange Geiger Tree | Cordia sebestena | YES | 12` HT X 5` SPRD, MIN 2" CAL |
| IC | 47 | Dahoon Holly | Ilex cassine | YES | 12` HT X 5` SPRD, MIN 2" CAL |
| LP | 15 | Crape Myrtle | Lagerstroemia indica | NO | 12` HT X 5` SPRD, MIN 2" CAL |
| QV | 25 | Southern Live Oak | Quercus virginiana | YES | 12` HT X 5` SPRD, MIN 2" CAL |
| **PALMS** | **QTY** | **COMMON NAME** | **BOTANICAL NAME** | **NATIVE** | **REMARKS** |
| SS | 57 | Cabbage Palmetto | Sabal palmetto | YES | 12` - 16` OAH, STAGGERED, BOOTED |
| **SHRUBS** | **QTY** | **COMMON NAME** | **BOTANICAL NAME** | **NATIVE** | **REMARKS** |
| IV2 | 6 | Schilling`s Dwarf Holly | Ilex vomitoria `Schilling`s Dwarf` | YES | 36" HT X 36" SPRD, MOUNDS |
| **SHRUB AREAS** | **QTY** | **COMMON NAME** | **BOTANICAL NAME** | **NATIVE** | **REMARKS** |
| CI | 587 | Cocoplum | Chrysobalanus icaco | YES | 36" HT X 36" SPRD X 36" O.C. |
| CH | 143 | Horizontal Cocoplum | Chrysobalanus icaco `Horizontalis` | YES | 18" HT X 18" SPRD @ 24" O.C. |
| CRN | 16 | Dwarf Clusia | Clusia fluminensis | YES | 18" HT X 18" SPRD @ 24" O.C. |
| CE2 | 265 | Green Buttonwood | Conocarpus erectus | NO | 48` HT X 48" SPRD, @ 36" O.C. |
| CS3 | 99 | Silver Buttonwood | Conocarpus erectus `Sericeus` | YES | 48" HT X 36" SPRD @ 36" O.C. |
| FG | 3 | Green Island Ficus | Ficus microcapra `Green Island` | NO | 24" HT X 24" SPRD @ 24" O.C. |
| IV | 103 | Schilling`s Dwarf Holly | Ilex vomitoria `Schilling`s Dwarf` | YES | 24" HT 24" SPRD, @ 24" O.C. |
| IR | 19 | Red Dwarf Ixora | Ixora chinensis `Red Dwarf` | NO | 24" HT X 24" SPRD, @ 30" O.C. |
| NE | 54 | Boston Fern | Nephrolepis exaltata | YES | 18" HT. X 18" SPRD., @ 24" O.C. |
| PM | 46 | Podocarpus | Podocarpus macrophyllus | NO | 4` HT, FULL TO BASE, @ 24" O.C. |
| SJ | 55 | Native Porterweed | Stachytarpheta jamaicensis | YES | 10" HT X 10" SPRD, @ 24" O.C. |
| ZF | 30 | Coontie Palm | Zamia floridana | YES | 24" HT X 24" SPRD, @ 30" O.C. |
| **GROUND COVERS** | **QTY** | **COMMON NAME** | **BOTANICAL NAME** | **NATIVE** | **REMARKS** |
| PO | 150 | Baby Rubber Plant | Florida Peperomia obtusifolia | YES | 8" HT X 6" SPRD @ 6" O.C. |
| DFG | 57 | Dwarf Fakahatchee Grass | Tripsacum floridanum | YES | 18" HT. X 18" SPRD., @ 24" O.C. |

FLORIDA ZOYSIAGRASS - ONLY TO BE USED IN SPORTS FIELD/LAWN GAMES AREA. CONTRACTOR TO VERIFY QUANTITY IN FIELD.

WGI
2035 Vista Parkway, West Palm Beach, FL 33411
Phone No. 866.909.2220 www.wginc.com
Cert No. 6091 - LB No. 7055

| NO | DATE | DESCRIPTION | BY |
|---|---|---|---|
| 1 | 11-20-2020 | RESUBMITTAL | BJ |
| 2 | 12-21-2020 | RESUBMITTAL | BJ |
| 3 | 01-15-2021 | RESUBMITTAL | BJ |
| 4 | 02-24-2021 | RESUBMITTAL | BJ |

REVISIONS

CAD 54070\LP.DWG
JOB NO. 5407.01
DRAWN BY BJ/LC/DN
CHECK BY TM
DATE 10/07/2020

LANDSCAPE ARCHITECT OF RECORD
TIFFANY DELYNN MAY
FL# LA6667274

DAVIS ROAD PROPERTY
PALM SPRINGS, FL

**LANDSCAPE PLAN**

SHEET:
LP-1.01

Bryan Jackman C:\projects\gwg\bryan.jackman\d1f8981615405701-LP.dwg, pdf Plotted: 2/24/2021 5:08:09 PM Saved: 2/24/2021 3:24:56 PM

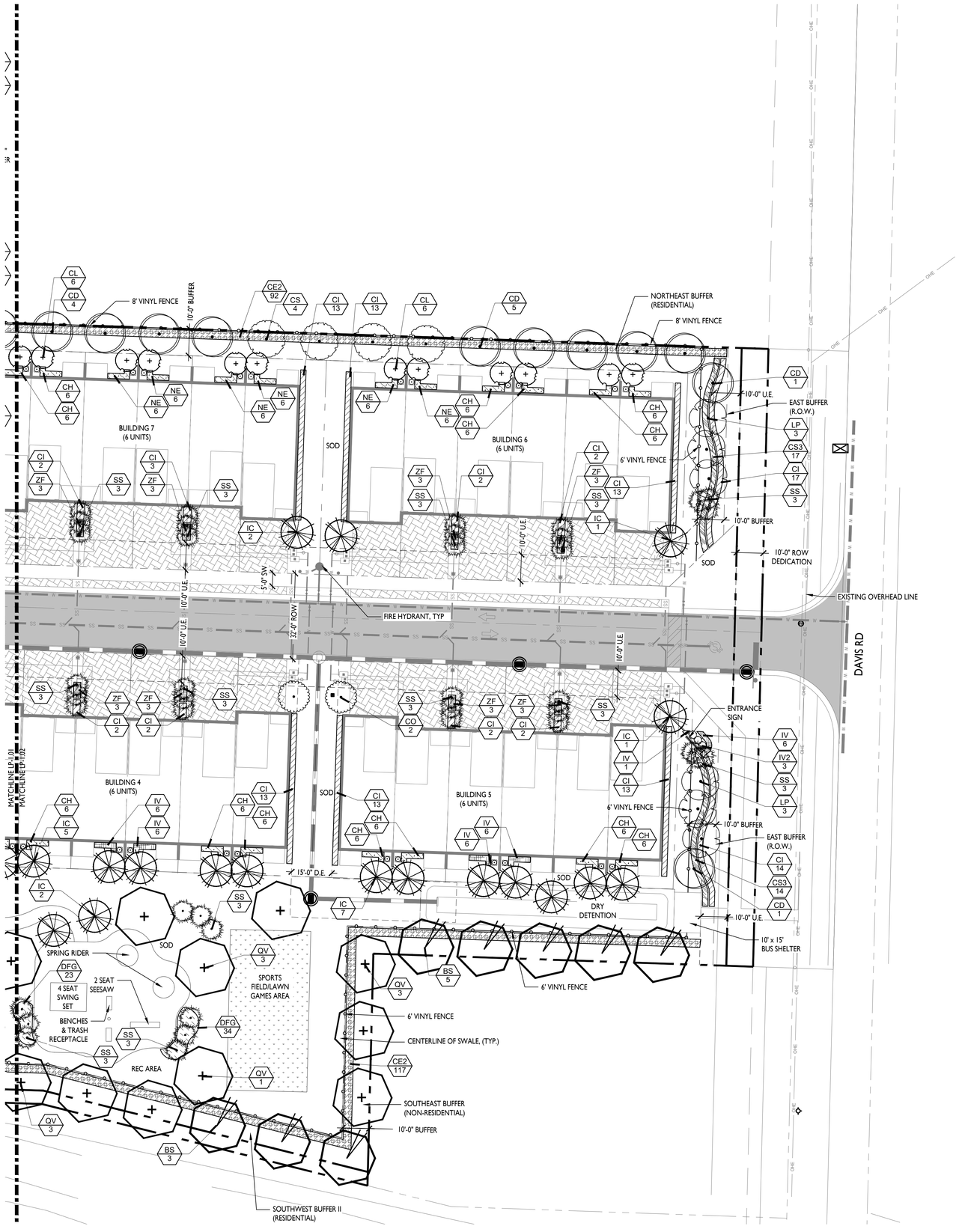


## SHEET KEY MAP

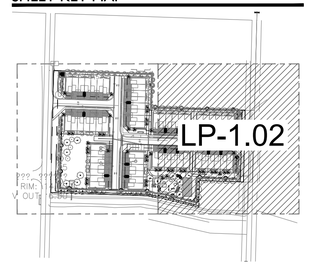


N

0 10 20 40

SCALE: 1" = 20'

## LANDSCAPE REQUIREMENTS

PALM SPRINGS, FLORIDA

| PERIMETER LANDSCAPING | REQUIRED | PROVIDED |
|---|---|---|
| LOCAL/ PRIVATE R.O.W. BUFFER | | |
| CATEGORY 6 STANDARD - 10' BUFFER<br>1 CANOPY TREE PER 20 LINEAR FEET AND A MEANDERING 3' HEDGE WITH 2 TIERS | WEST BUFFER<br>360 LF / 20 = 18 TREES AND A MEANDERING 3' HEDGE WITH 2 TIERS<br><br>EAST BUFFER<br>200 LF / 20 = 10 TREES AND A MEANDERING 3' HEDGE WITH 2 TIERS | WEST BUFFER<br>18 TREES<br>AND A MEANDERING 3' HEDGE WITH 2 TIERS<br><br>EAST BUFFER<br>10 TREES (8 TREES AND 6 PALMS @ 3:1)<br>AND A MEANDERING 3' HEDGE WITH 2 TIERS |
| RESIDENTIAL BUFFER | | |
| CATEGORY 2 STANDARD - 10' BUFFER<br>1 CANOPY TREE PER 20 LINEAR FEET<br>WALL/FENCE AND 4' HEDGE AT TIME OF PLANTING | NORTHEAST BUFFER<br>410 LF / 20 = 21 TREES<br><br>SOUTHWEST BUFFER II<br>160 LF / 20 = 8 TREES | NORTHEAST BUFFER<br>21 TREES AND 4' HEDGE AT TIME OF PLANTING*<br><br>SOUTHWEST BUFFER II<br>8 TREES AND 4' HEDGE AT TIME OF PLANTING*<br><br>*WALL/FENCE IS NOT DEEMED NECESSARY FOR THESE SMALL PORTIONS OF THE SITE |
| NONRESIDENTIAL BUFFER | | |
| NON-VEHICULAR USE AREAS -<br>PERIMETER LANDSCAPING ALONG BOUNDARY<br>1 TREE PER 25 LF | NORTHWEST BUFFER<br>317 LF / 25 = 13 TREES<br><br>SOUTHWEST BUFFER I<br>317 LF / 25 = 13 TREES<br><br>SOUTHEAST BUFFER<br>225 LF / 25 = 8 TREES | NORTHWEST BUFFER<br>14 TREES<br><br>SOUTHWEST BUFFER I<br>14 TREES<br><br>SOUTHEAST BUFFER<br>8 TREES |
| **INTERIOR LANDSCAPING** | **REQUIRED** | **PROVIDED** |
| FOUNDATION PLANTING | | |
| AT LEAST 1 TREE OR CLUSTER OF 3 PALMS SHALL BE INSTALLED FOR EACH 30 LF OF BUILDING FACADE FACING A STREET | 6 UNIT BUILDING<br>120 LF/ 30 = 4 TREES AT STREET FACADE FOR EACH BUILDING<br><br>7 UNIT BUILDING<br>140 LF/ 30 = 5 TREES AT STREET FACADE FOR EACH BUILDING<br><br>8 UNIT BUILDING<br>160 LF/ 30 = 6 TREES AT STREET FACADE FOR EACH BUILDING | 6 UNIT BUILDING<br>4 TREES FOR EACH BUILDING<br>(2 TREES AND 6 PALMS @ 3:1)<br><br>7 UNIT BUILDING<br>MIN. 5 TREES FOR EACH BUILDING<br>(4 TREES AND 3 PALMS @ 3:1)<br><br>8 UNIT BUILDING<br>6 TREES FOR EACH BUILDING<br>(5 TREES AND 3 PALMS @ 3:1) |
| RESIDENTIAL PARCEL - TREE PLANTING | | |
| 1 TREE PLANTED FOR EVERY 2,500 SF OF A PARCEL USED FOR NON RESIDENTIAL PURPOSES | 6 UNIT BUILDING<br>11,300 SF / 1,500 SF = 8 TREES FOR EACH BUILDING<br><br>7 UNIT BUILDING<br>12,540 SF / 1,500 SF = 9 TREES FOR EACH BUILDING<br><br>8 UNIT BUILDING<br>14,715 SF / 1,500 SF = 10 TREES FOR EACH BUILDING | 6 UNIT BUILDING<br>10 TREES FOR EACH BUILDING<br>(8 TREES AND 6 PALMS @ 3:1)<br><br>7 UNIT BUILDING<br>12 TREES FOR EACH BUILDING<br>(11 TREES AND 3 PALMS @ 3:1)<br><br>8 UNIT BUILDING<br>14 TREES FOR EACH BUILDING<br>(13 TREES AND 3 PALMS @ 3:1) |
| NON-RESIDENTIAL PARCEL - TREE PLANTING | | |
| 1 TREE PLANTED FOR EVERY 2,500 SF OF A PARCEL USED FOR NON RESIDENTIAL PURPOSES | WEST DETENTION AREA<br>19,141 SF / 2,500 SF = 8 TREES<br><br>REC AREA<br>14,175 SF / 2,500 SF = 6 TREES<br><br>EAST DRY DETENTION AREA<br>1,961 SF / 2,500 SF = 1 TREE | WEST DETENTION AREA<br>9 TREES<br><br>REC AREA<br>11 TREES (8 TREES AND 9 PALMS @ 3:1)<br><br>EAST DETENTION AREA<br>1 TREE |

## PLANT SCHEDULE OVERALL

| TREES | QTY | COMMON NAME | BOTANICAL NAME | NATIVE | REMARKS |
|---|---|---|---|---|---|
| BS | 8 | Gumbo Limbo | Bursera simaruba | YES | 12` HT X 5` SPRD, MIN 2" CAL |
| CL | 23 | Spiny Fiddlewood | Citharexylum spinosum | YES | 12` HT X 5` SPRD, 2" CAL, 5` CT |
| CD | 31 | Pigeon Plum | Coccoloba diversiolia | YES | 12` HT X 5` SPRD, MIN 2" CAL |
| CE | 3 | Green Buttonwood | Conocarpus erectus | YES | 12` HT X 5` SPRD, MIN 2" CAL |
| CS | 24 | Silver Buttonwood | Conocarpus erectus sericeus | YES | 12` HT X 5` SPRD, MIN 2" CAL |
| CO | 19 | Orange Geiger Tree | Cordia sebestena | YES | 12` HT X 5` SPRD, MIN 2" CAL |
| IC | 47 | Dahoon Holly | Ilex cassine | YES | 12` HT X 5` SPRD, MIN 2" CAL |
| LP | 15 | Crape Myrtle | Lagerstroemia indica | NO | 12` HT X 5` SPRD, MIN 2" CAL |
| QV | 25 | Southern Live Oak | Quercus virginiana | YES | 12` HT X 5` SPRD, MIN 2" CAL |
| **PALMS** | **QTY** | **COMMON NAME** | **BOTANICAL NAME** | **NATIVE** | **REMARKS** |
| SS | 57 | Cabbage Palmetto | Sabal palmetto | YES | 12` - 16` OAH, STAGGERED, BOOTED |
| **SHRUBS** | **QTY** | **COMMON NAME** | **BOTANICAL NAME** | **NATIVE** | **REMARKS** |
| IV2 | 6 | Schilling`s Dwarf Holly | Ilex vomitoria `Schilling`s Dwarf` | YES | 36" HT X 36" SPRD, MOUNDS |
| **SHRUB AREAS** | **QTY** | **COMMON NAME** | **BOTANICAL NAME** | **NATIVE** | **REMARKS** |
| CI | 587 | Cocoplum | Chrysobalanus icaco | YES | 36" HT X 36" SPRD X 36" O.C. |
| CH | 143 | Horizontal Cocoplum | Chrysobalanus icaco `Horizontalis` | YES | 18" HT X 18" SPRD @ 24" O.C. |
| CRN | 16 | Dwarf Clusia | Clusia fluminensis | YES | 18" HT X 18" SPRD @ 24" O.C. |
| CE2 | 265 | Green Buttonwood | Conocarpus erectus | NO | 48` HT X 48" SPRD. @ 36" O.C. |
| CS3 | 99 | Silver Buttonwood | Conocarpus erectus `Sericeus` | YES | 48" HT X 36" SPRD @ 36" O.C. |
| FG | 3 | Green Island Ficus | Ficus microcapra `Green Island` | NO | 24" HT X 24" SPRD @ 24" O.C. |
| IV | 103 | Schilling`s Dwarf Holly | Ilex vomitoria `Schilling`s Dwarf` | YES | 24" HT 24" SPRD, @ 24" O.C. |
| IR | 19 | Red Dwarf Ixora | Ixora chinensis `Red Dwarf` | NO | 24" HT X 24" SPRD, @ 30" O.C. |
| NE | 54 | Boston Fern | Nephrolepis exaltata | YES | 18" HT. X 18" SPRD., @ 24" O.C. |
| PM | 46 | Podocarpus | Podocarpus macrophyllus | NO | 4` HT, FULL TO BASE, @ 24" O.C. |
| SJ | 55 | Native Porterweed | Stachytarpheta jamaicensis | YES | 10" HT X 10" SPRD, @ 24" O.C. |
| ZF | 30 | Coontie Palm | Zamia floridana | YES | 24" HT X 24" SPRD, @ 30" O.C. |
| **GROUND COVERS** | **QTY** | **COMMON NAME** | **BOTANICAL NAME** | **NATIVE** | **REMARKS** |
| PO | 150 | Baby Rubber Plant | Florida Peperomia obtusifolia | YES | 8" HT X 6" SPRD @ 6" O.C. |
| DFG | 57 | Dwarf Fakahatchee Grass | Tripsacum floridanum | YES | 18" HT. X 18" SPRD., @ 24" O.C. |

FLORIDA ZOYSIAGRASS - ONLY TO BE USED IN SPORTS FIELD/LAWN GAMES AREA. CONTRACTOR TO VERIFY QUANTITY IN FIELD.


WGI
2035 Vista Parkway, West Palm Beach, FL 33411
Phone No. 866.909.2220 www.wginc.com
Cert No. 6091 - LB No. 7055


| NO | DATE | DESCRIPTION | BY |
|---|---|---|---|
| 1 | 11-20-2020 | RESUBMITTAL | BJ |
| 2 | 12-21-2020 | RESUBMITTAL | BJ |
| 3 | 01-15-2021 | RESUBMITTAL | BJ |
| 4 | 02-24-2021 | RESUBMITTAL | BJ |

REVISIONS

CAD 54070-LP.DWG
JOB NO. 5407.01
DRAWN BY BJ/LC/DN
CHECK BY TM
DATE 10/07/2020

LANDSCAPE ARCHITECT OF RECORD
TIFFANY DELYNN MAY
FL# LA6667274

DAVIS ROAD PROPERTY
PALM SPRINGS, FL

**LANDSCAPE PLAN**

SHEET:
LP-1.02


Bryan Jackman C:\pwworkingphj\bryan.jackman\d1899816\54070-LP.dwg .pdf Plotted: 2/24/2021 1:08:07 PM Saved: 2/24/2021 1:24:56 PM

## SMALL PALM STAKING PLAN

NTS.

NOTE:
1. APPLICABLE TO ALL PALMS WITH CALIPER SIZE OF LESS THAN SIX (6) INCHES.
2. ALL TREE SUPPORTS MATERIALS ARE TO BE REMOVED FROM EACH TREE ONCE IT IS ESTABLISHED. TYPICALLY SIX MONTHS FOR SHADE TREES OR ONE YEAR FOR PALMS.

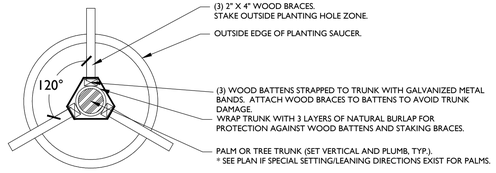


## LARGE PALM OR TREE STAKING PLAN

NTS.

NOTE:
1. APPLICABLE TO ALL MULTI-TRUNK PALMS AND PALMS WITH CALIPER SIZE OF SIX (6) INCHES OR GREATER
2. ALL TREE SUPPORTS MATERIALS ARE TO BE REMOVED FROM EACH TREE ONCE IT IS ESTABLISHED. TYPICALLY SIX MONTHS FOR SHADE TREES OR ONE YEAR FOR PALMS.

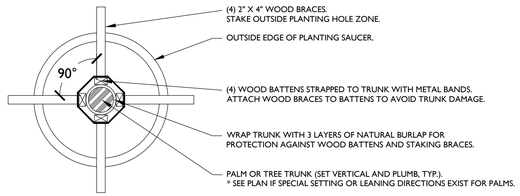


## PALM PLANTING DETAIL

NTS.

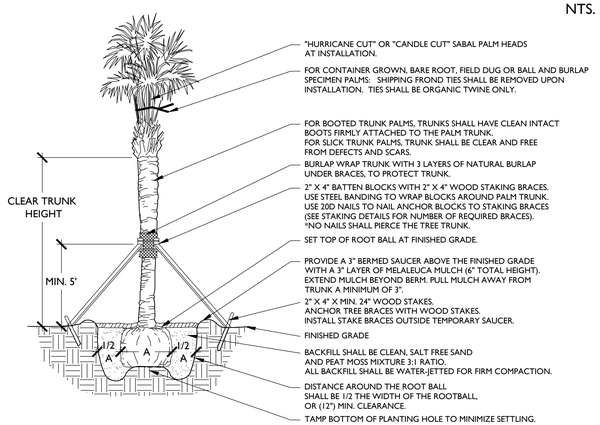


## TREE PLANTING DETAIL

NOTE:
1. ALL TREE SUPPORT MATERIALS ARE TO BE REMOVED FROM EACH TREE ONCE IT IS ESTABLISHED. TYPICALLY SIX MONTHS TO ONE YEAR AFTER PLANTING FOR SHADE TREES.

NTS.

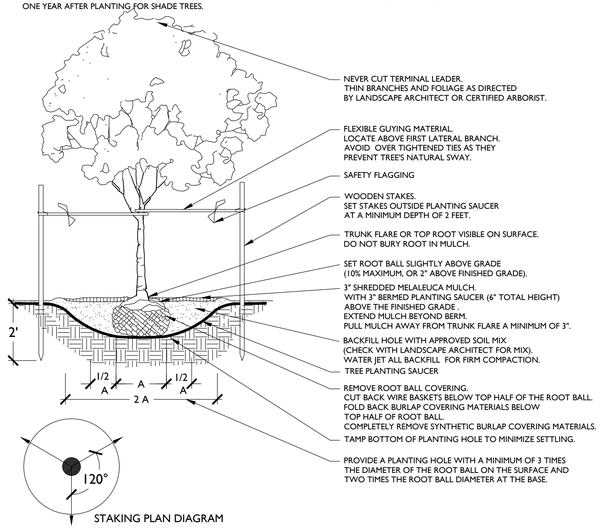


## GROUNDCOVER DETAIL

NTS.

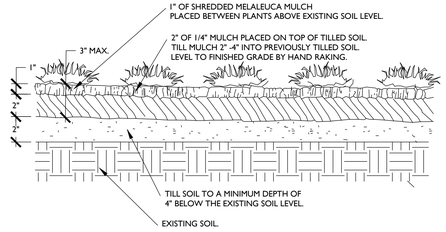


## PLANT SPACING DETAIL

NTS.

| SPACING "D" | ROW "A" |
|---|---|
| 6" O.C. | 5.2" |
| 8" O.C. | 6.93" |
| 10" O.C. | 8.66" |
| 12" O.C. | 10.4" |
| 18" O.C. | 15.6" |
| 24" O.C. | 20.8" |
| 30" O.C. | 26.0" |
| 36" O.C. | 31.2" |
| 48" O.C. | 41.6" |

PLANT SPACING CHART

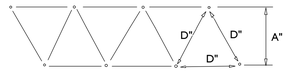


## SHRUB PLANTING DETAIL

NTS.

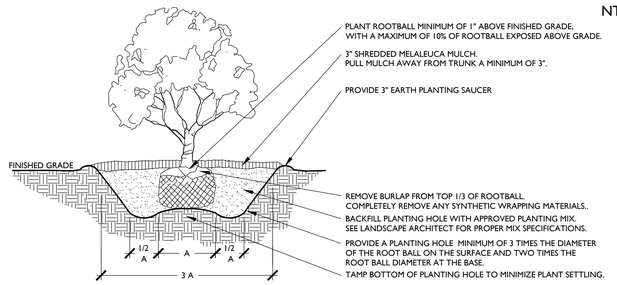


## ROOT BARRIER DETAIL

NOTE:
1. TREES ARE TO BE INSTALLED WITH A MINIMUM TEN FOOT (10') SEPARATION FROM ANY PUBLIC WATER OR PUBLIC SEWER MAIN AND/OR SERVICE, HYDRANTS, AND LIFT STATIONS. IF A TEN FOOT (10') SEPARATION CANNOT BE ACHIEVED, THE TREE SHALL BE INSTALLED WITH A ROOT BARRIER SYSTEM.

2. ROOT BARRIERS SHALL COMPLY WITH ALL REQUIREMENTS OF THE MUNICIPALITY WITHIN WHICH THEY ARE LOCATED AS WELL AS WITH ANY REQUIREMENTS OF THE UTILITY HOLDER OF THE AFFECTED UTILITIES. IN THE EVENT THAT CONFLICTING REQUIREMENTS EXIST BETWEEN THIS ROOT BARRIER DETAIL AND THE MUNTICIPALITY/UTILITY HOLDER REQUIREMENTS, THE MORE STRINGENT OF THE REQUIREMENTS SHALL BE APPLICABLE.

NTS.

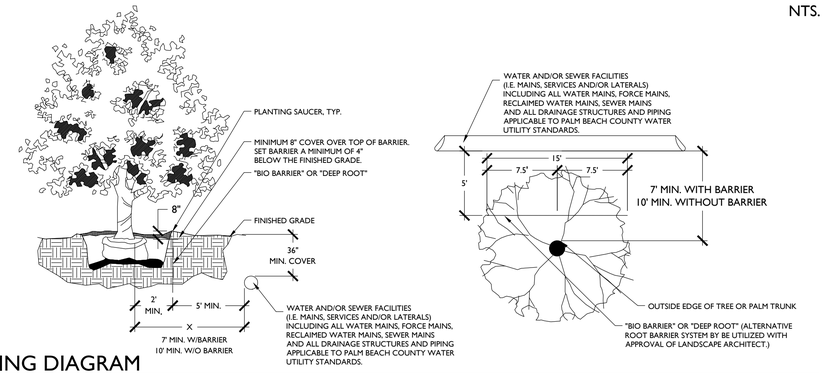


## TYPICAL PLANTING DIAGRAM

NTS.

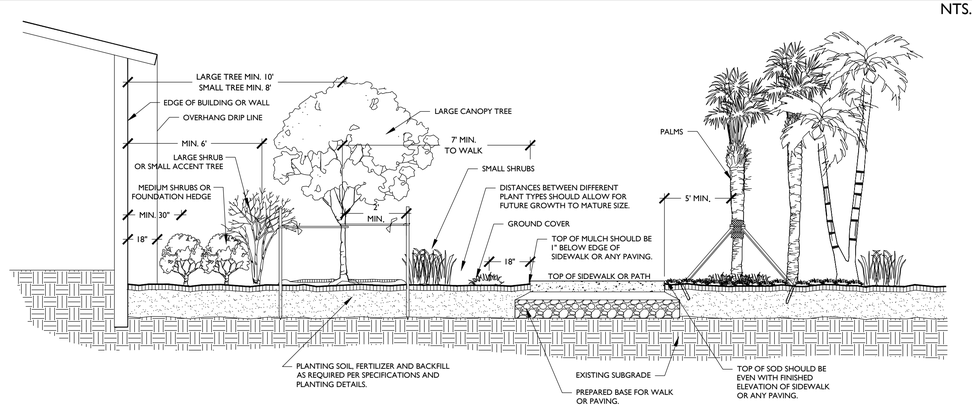


## TREE PROTECTION DETAIL

NOTE: 1. THIS DETAIL APPLIES TO ALL TREES THAT WILL BE PRESERVED IN PLACE OR BE RELOCATED.

NTS.

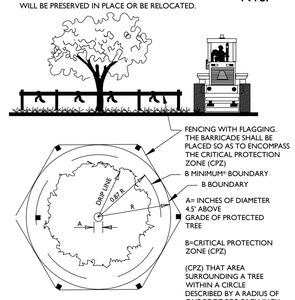


## SHRUB AND GROUNDCOVER PLANTING DETAIL

NTS.

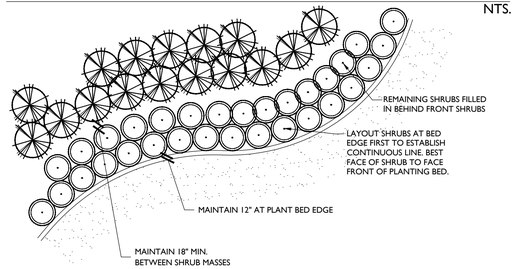


## LANDSCAPE NOTES:

1. STRUCTURAL ELEMENTS AND HARDSCAPE FEATURES INDICATED ON LANDSCAPE PLANS ARE FOR INFORMATIONAL PURPOSES ONLY. LANDSCAPE PLANS ARE TO BE UTILIZED FOR LOCATION OF LIVING PLANT MATERIAL ONLY. LANDSCAPE PLANS SHOULD NOT BE UTILIZED FOR STAKING AND LAYOUT OR LOCATION OF ANY STRUCTURAL SITE FEATURES INCLUDING BUT NOT LIMITED TO: BUILDINGS, SIGNAGE, PATHWAYS, EASEMENTS, BERMS, WALL, FENCES, UTILITIES OR ROADWAYS.
2. CONTRACTOR SHALL ACQUIRE ALL APPLICABLE FEDERAL, STATE, LOCAL, JURISDICTIONAL OR UTILITY COMPANY PERMITS REQUIRED PRIOR TO REMOVAL, RELOCATION, AND/OR INSTALLATION OF LANDSCAPE MATERIALS INDICATED WITHIN PLAN DOCUMENTS. THE CONTRACTOR SHALL HAVE PERMITS "IN HAND" PRIOR TO STARTING WORK. LANDSCAPE ARCHITECT SHALL BEAR NO RESPONSIBILITY FOR WORK PERFORMED WITHOUT PERMITTED DRAWINGS. THE CONTRACTOR SHALL BE RESPONSIBLE FOR ALL CHANGES TO THE WORK, AT NO ADDITIONAL COST TO THE OWNER, AS A RESULT OF UNAUTHORIZED WORK PRIOR TO RECEIPT OF PERMIT.
3. TREES SHOWN ON THIS PLAN ARE FOR GRAPHIC REPRESENTATION ONLY. TREE SPACING IS BASED ON DESIGN REQUIREMENTS AND THE TREES SHOWN ON THESE PLANS ATTEMPT TO ACCOMPLISH THAT SPACING WHILE MAINTAINING THE REQUIRED SETBACKS FROM UTILITIES. IN THE EVENT OF A CONFLICT, AFFECTED PLANT MATERIAL SHALL BE FIELD ADJUSTED WITH THE APPROVAL OF THE LANDSCAPE ARCHITECT TO AVOID CONFLICTS WITH THE WITH EXISTING AND PROPOSED UTILITIES, LIGHT POLES, DRAINAGE STRUCTURES OR LINES, LAKE MAINTENANCE EASEMENTS OR OTHER AFFECTED SITE FEATURES.
4. ANY PLANTING WITHIN THE SIGHT TRIANGLES SHALL PROVIDE UNOBSTRUCTED VIEWS AT A LEVEL BETWEEN 30" AND 8' ABOVE THE PAVEMENT.
5. ALL UTILITY BOXES/ STRUCTURES TO BE SCREENED ON 3 SIDES W/ APPROVED PLANTING MATERIAL.
6. IRRIGATION IS REQUIRED PROVIDING 100% COVERAGE WITH A MAXIMUM OF 50% OVERLAP, AN AUTOMATIC RAIN SENSOR MUST BE INCLUDED.
7. ALL PLANT MATERIAL TO BE INSTALLED SHALL CONFORM TO FLORIDA POWER AND LIGHT'S (FPL'S) RIGHT TREE RIGHT PLACE GUIDELINES.
8. IN CASE OF DISCREPANCIES PLANS TAKE PRECEDENCE OVER PLANT LIST.
9. LANDSCAPE CONTRACTOR RESPONSIBLE FOR VERIFICATION OF ALL QUANTITIES PRIOR TO BIDDING.
10. REMOVAL OF EXISTING VEGETATION IS RESPONSIBILITY OF LANDSCAPE CONTRACTOR.
11. RELOCATION OF EXISTING VEGETATION IS RESPONSIBILITY OF LANDSCAPE CONTRACTOR. REFER TO SPECIFICATIONS FOR RELOCATION INSTRUCTIONS.
12. ALL PLANT MATERIAL TO BE FLORIDA GRADE #1 AT TIME OF INSTALLATION UNLESS OTHERWISE NOTED.

WGL
2035 Vista Parkway, West Palm Beach, FL 33411
Phone No. 866.909.2220 www.wglinc.com
Cert No. 6091 - LB No. 7055

| REVISIONS | | | |
|---|---|---|---|
| NO | DATE | DESCRIPTION | BY |
| 1 | 11-20-2020 | RESUBMITTAL | BJ |
| 2 | 12-17-2020 | RESUBMITTAL | BJ |
| 3 | 01-15-2021 | RESUBMITTAL | BJ |
| 4 | 02-24-2021 | RESUBMITTAL | BJ |

| | |
|---|---|
| CAD 5407014-LP.DWG | |
| JOB NO. | 5407.01 |
| DRAWN BY | BJ/LC/DN |
| CHECK BY | TM |
| DATE | 10/07/2020 |

LANDSCAPE ARCHITECT OF RECORD
TIFFANY DELYNN MAY
FL# LA6667274

DAVIS ROAD PROPERTY
PALM SPRINGS, FL

**LANDSCAPE DETAILS**

SHEET:
LP-5.00

Bryan Jackman C:\pwworking\mgr\bryan.jackman\d186661\05407014-LP.dwg pdf Plotted: 2/24/2021 5:08:07 PM Saved: 2/24/2021 1:24:56 PM

## Landscape Planting - Part I. General

I. Description of Work

A. Provide all exterior planting as shown on the drawings or inferable therefrom and/or as specified in accordance with the requirements of the Contract Documents. Landscape plans provided indicate the proposed location of living plant material only. Structural elements and hardscape features indicated on the landscape plans are for information purposes only. Landscape plans are not to be utilized for staking and layout or location of any structural site features including but not limited to, buildings, signage, pathways, easements, utilities or roadways.

B. These specifications include standards necessary for and incidental to the execution and completion of planting as indicated on the prepared drawings and specified herein.

C. All applicable federal, state and local permits shall be attained prior to the removal, relocation, or installation of plant materials indicated within the plan documents.

D. Protection of existing features. During construction, protect all existing trees, shrubs, and other specified vegetation, site features and improvements, structures, and utilities specified herein and/or on submitted drawings. Removal or destruction of existing plantings is prohibited unless specifically authorized by the owner, and with permit as required by associated federal, state and local government agencies.

II. Applicable Standards

A. American National Standards for Tree Care Operations, ANSI A300. American National Standards Institute, 11 West 42nd Street, New York, N.Y. 10036.

B. American Standard for Nursery Stock, ANSI Z60.1. American Nursery and Landscape Association, 1250 Eye Street. NW, Suite 500, Washington, D.C. 20005.

C. Hortus Third, The Staff of the L.H. Bailey Hortorium. 1976. MacMillan Publishing Co., New York.

D. Florida Department of Agriculture "Grades and Standards for Nursery Plants", most recent addition.

E. National Arborist Association- Pruning Standards for Shade Trees

F. All standards shall include the latest additions and amendments as of the date of advertisement for bids

III. Qualifications

A. Landscape planting and related work shall be performed by a firm with a minimum of five years experience specializing in this type of work. All contractors and their sub-contractors who will be performing any landscape work included in this section of the specification shall be approved by the landscape architect.

B. Landscape Contractor shall be licensed and shall carry any necessary insurance and shall protect the Landscape Architect and Owner against all liabilities, claims or demands for injuries or damage to any person or property growing out of the performance of the work under this contract. All workers shall be covered by Workman's Compensation Insurance.

IV. Requirements of Regulatory Agencies

A. Certificates of inspection shall accompany the invoice for each shipment of plants as may be required by law for transportation. File certificates with the landscape architect prior to acceptance of the material. Inspection by federal or state authorities at place of growth does not preclude rejection of the plants at the site.

V. Submittals

A. Manufacturer's Data: Submit copies of the manufacturer's and/or source data for all materials specified, including soils, soil amendments and fertilizer materials. Comply with regulations applicable to landscape materials.

B. Samples: Submit samples of all topsoil, soil mixes, mulches, and organic materials. Samples shall weigh 1 kg (2 lb) and be packaged in plastic bags. Samples shall be typical of the lot of material to be delivered to the site and provide an accurate indication of color, texture, and organic makeup of the material.

C. Nursery Sources: Submit a list of all nurseries that will supply plants, along with a list of the plants they will provide and the location of the nursery.

D. Soil Test: Submit soil test analysis report for each sample of topsoil and planting mix from a soil testing laboratory approved by the landscape architect.

1. Provide a particle size analysis, including the following gradient of mineral content:

| USDA Designation | Size in mm |
|---|---|
| Gravel | +2 mm |
| Very Course Sand | 1-2 mm |
| Coarse Sand | 0.5-1 mm |
| Medium Sand | 0.25-0.5 mm |
| Fine Sand | 0.1-0.25 mm |
| Very fine sand | 0.05-0.1 mm |
| Silt | 0.002-0.05 mm |
| Clay | smaller than 0.002 |

2. Provide a chemical analysis, including the following:

a. pH and buffer pH

b. Percentage of organic content by oven-dried weight.

c. Nutrient levels by parts per million, including phosphorus, potassium magnesium, manganese, iron, zinc, and calcium. Nutrient test shall include the testing laboratory recommendations for supplemental additions to the soil based on the requirements of horticultural plants.

d. Soluble salt by electrical conductivity of a 1:2, soil: water, sample measured in millimho per cm.

e. Cation exchange capacity (CEC).

E. Material Testing: Submit the manufacturers particle size analysis, and the pH analysis and provide a description and source location for the content material of all organic materials.

F. Maintenance Instructions: Prior to the end of maintenance period, Landscape Contractor shall furnish three copies of written maintenance instructions to the Landscape Architect for transmittal to the Owner for maintenance and care of installed plants through their full growing season.

VI. Utility Verification

A. The contractor shall contact the local utility companies for verification of the location of all underground utility lines in the area of the work. The contractor shall be responsible for all damage resulting from neglect or failure to comply with this requirement.

## Part 2. Materials

I. Plants

A. Plants shall be true to species and variety specified and nursery-grown in accordance with good horticultural practices under climatic conditions similar to those in the locality of the project for at least two years. They shall have been freshly dug.

1. All plant names and descriptions shall be as defined in Hortus Third.
2. All plants shall be grown and harvested in accordance with the American Standard for Nursery Stock and Florida Department of Agriculture Grades and Standards for Nursery Plants.
3. Unless approved by the landscape architect, plants shall have been grown at a latitude not more than 325 km (200 miles) north or south of the latitude of the project unless the provenance of the plant can be documented to be compatible with the latitude and cold hardiness zone of the planting location.

B. Unless specifically noted, all plants shall be exceptionally heavy, symmetrical, and so trained or favored in development and appearance as to be unquestionably and outstandingly superior in form, compactness, and symmetry. They shall be sound, healthy, vigorous, well branched, and densely foliated when in leaf; free of disease and insects, eggs, or larvae; and shall have healthy, well-developed root systems. They shall be free from physical damage or other conditions that would prevent vigorous growth.

1. Trees with multiple leaders, unless specified, will be rejected. Trees with a damaged or crooked leader, bark abrasions, sunscald, disfiguring knots, insect damage, or cuts of limbs over 20 mm (3/4 in.) in diameter that are not completely closed will be rejected.

C. Plants shall conform to the measurements specified, except that plants larger than those specified may be used if approved by the landscape architect. Use of larger plants shall not increase the contract price. If larger plants are approved, the root ball shall be increased in proportion to the size of the plant.

1. Caliper measurements shall be taken on the trunk 150 mm (6 in.) above the natural ground line for trees up to and including 100 mm (4 in.) in caliper, and 300 mm (12 in.) above the natural ground line for trees over 100 mm (4 in.) in caliper. Height and spread dimensions specified refer to the main body of the plant and not from branch tip to branch tip. Plants shall be measured when branches are in their normal position. If a range of sizes is given, no plant shall be less than the minimum size, and no less than 50 percent of the plants shall be as large as the maximum size specified. Measurements specified are minimum sizes acceptable after pruning, where pruning is required. Plants that meet measurements but do not possess a standard relationship between height and spread, according to the Florida Department of Agriculture Grades and Standards for Nursery Plants, shall be rejected.

D. Substitutions of plant materials will not be permitted unless authorized in writing by the landscape architect. If proof is submitted in writing that a plant specified is not obtainable, consideration will be given to the nearest available size or similar variety, with a corresponding adjustment of the contract price.

E. The plant schedule provided at the end of this section, or on the drawing, is for the contractor's information only, and no guarantee is expressed or implied that quantities therein are correct or that the list is complete. The contractor shall ensure that all plant materials shown on the drawings are included in his or her bid.

F. All plants shall be labeled by plant name. Labels shall be attached securely to all plants, bundles, and containers of plant materials when delivered. Plant labels shall be durable and legible, with information given in weather-resistant ink or embossed process lettering.

G. Selection and Tagging

1. Plants shall be subject to inspection for conformity to specification requirements and approval by the landscape architect at their place of growth and upon delivery. Such approval shall not impair the right of inspection and rejection during progress of the work.
2. A written request for the inspection of plant material at their place of growth shall be submitted to the landscape architect at least ten calendar days prior to digging. This request shall state the place of growth and the quantity of plants to be inspected. The landscape architect may refuse inspection at this time if, in his or her judgment, sufficient quantities of plants are not available for inspection or landscape architect deems inspection is not required.
3. All field grown deciduous trees shall be marked to indicate the trees north orientation in the nursery. Place a 1-in. diameter spot of white paint onto the north side of the tree trunk within the bottom 12 inches of the trunk.

H. Anti-Desiccants

1. Anti-desiccants, if specified, are to be applied to plants in full leaf immediately before digging or as required by the landscape architect. Anti-desiccants are to be sprayed so that all leaves and branches are covered with a continuous protective film.

I. Balled and Burlapped (B&B) Plant Materials

1. Trees designated B&B shall be properly dug with firm, natural balls of soil retaining as many fibrous roots as possible, in sizes and shapes as specified in the Florida Department of Agriculture Grades and Standards for Nursery Plants. Balls shall be firmly wrapped with synthetic, natural, or treated burlap, and/or wire. All synthetic fabric should be removed from the rootball prior to planting. True biodegradable burlap can be left around the root ball. The root collar shall be apparent at surface of ball. Trees with loose, broken, processed, or manufactured root balls will not be accepted, except with special written approval before planting.

J. Container Plants

1. Plants grown in containers shall be of appropriate size for the container as specified in the most recent edition of the Florida Department of Agriculture Grades and Standards for Nursery Plants and be free of circling roots on the exterior and interior of the root ball.
2. Container plants shall have been grown in the container long enough to have established roots throughout the growing medium.

K. Bareroot and Collected Plants

1. Plants designated as bareroot or collected plants shall conform to the American Standard for Nursery Stock.
2. Bareroot material shall not be dug or installed after bud break or before dormancy.
3. Collected plant material that has not been taken from active nursery operations shall be dug with a root ball spread at least 1/3 greater than nursery grown plants. When specified or approved, shall be in good health, free from disease, insect or weed infestation and shall not be planted before inspection and acceptance at the site. Testing may be required at the discretion of the Landscape Architect and/or the Owner and shall be provided at no additional cost.

L. Specimen Material: Plant material specified as specimens are to be approved by the Landscape Architect before being brought to the site. Unless otherwise noted on the drawings, these plants shall be Florida Fancy.

M. Palms

1. Coconut Palms shall be grown from a certified seed.
2. All palm species except Sabal palmetto shall have roots adequately wrapped before transporting.
3. Sabal palms shall have a hurricane cut. Sabal palms shall be installed on site at the earliest opportunity in the construction process. All Sabal palms shall be from Palm Beach County or other sandy soils. All Sabal palms shall be Florida Fancy.
4. For booted trunk palms, trunks shall have clean intact boots firmly attached to the palm trunk. For slick trunk palms, trunk shall be clear and free from defect and scars.
5. The Contractor shall treat all palms as required to prevent infestation by the palmetto weevil.

N. Sod

1. Sod shall be graded #1 or better. Sod shall be loam or muck grown with a firm, full texture and good root development. Sod shall be thick, healthy and free from defects and debris including but not limited to dead thatch, insects, fungus, diseases and contamination by weeds, other grass varieties or objectionable plant material.
2. Sod shall be sufficiently thick to insure a dense stand of live grass. Sod shall be live, fresh, and uninjured at the time of planting. Plant sod within 48 hours after harvesting.
3. Sod area shall be all areas not otherwise identified and shall include the area beyond the property line to the edge of pavement and/or edge of water.

O. Immediately after harvesting plants, protect from drying and damage until shipped and delivered to the planting site. Rootballs shall be checked regularly and watered sufficiently to maintain root viability.

P. Transportation and Storage of Plant Material

1. Branches shall be tied with rope or twine only, and in such a manner that no damage will occur to the bark or branches.
2. During transportation of plant material, the contractor shall exercise care to prevent injury and drying out of the trees. Should the roots be dried out, large branches broken, balls of earth broken or loosened, or areas of bark torn, the landscape architect may reject the injured tree(s) and order them replaced at no additional cost to the owner. All loads of plants shall be covered at all times with tarpaulin or canvas. Loads that are not protected will be rejected.
3. All bareroot stock sent from the storage facility shall be adequately covered with wet soil, sawdust, woodchips, moss, peat, straw, hay, or other acceptable moisture-holding medium, and shall be covered with a tarpaulin or canvas. Loads that are not protected in the above manner may be rejected.
4. Plants must be protected at all times from sun or drying winds. Those that cannot be planted immediately on delivery shall be kept in the shade, well protected with soil, wet mulch, or other acceptable material, and kept well watered. Plants shall not remain unplanted any longer than three days after delivery. Plants shall not be bound with wire or rope at any time so as to damage the bark or break branches. Plants shall be lifted and handled with suitable support of the soil ball to avoid damaging it.

Q. Mechanized Tree Spade Requirements

Trees may be moved and planted with an approved mechanical tree spade. The tree spade shall move trees limited to the maximum size allowed for a similar B&B root-ball diameter according to the American Standard for Nursery Stock or the manufacturer's maximum size recommendation for the tree spade being used, whichever is smaller. The machine shall be approved by the landscape architect prior to use. Trees shall be planted at the designated locations in the manner shown in the plans and in accordance with applicable sections of the specifications.

II Materials for Planting

A. Mulch: Except as otherwise specified, mulch shall be shredded Melaleuca mulch - grade "A". All Melaleuca mulch shall be made entirely from the wood and bark of the Melaleuca quinquinerva tree. It shall not contain more than 10% bark (by volume). Shreds and chips shall not be larger the ¾" diameter and 1½" in length. Mulch shall be free of weeds, seeds, and any other organic or inorganic material other than Melaleuca wood and bark. It shall not contain stones or other foreign material that will prevent its eventual decay. This shall be applied to all planted areas where indicated so that, after installation, the mulch thickness will not be less than 3". Submit sample for approval.

B. Peat: Shall be horticultural peat composed of not less than 60% decomposed organic matter by weight, on an oven dried basis. Peat shall be delivered to the site in a workable condition free from lumps.

C. Gravel Mulch: Use only where specifically indicated on the plans of the size and type shown. Unless otherwise specified it shall be water-worn, hard durable gravel, washed free of loam, sand, clay and other foreign substances. It shall be a minimum of 3" deep and shall be contained with edging or other approved gravel stop as indicated on the plans. It shall be a maximum of 1 1/2", a minimum of 3/4" and of a readily-available natural gravel color range. Provide geotextile filter fabric below aggregate rock. Submit sample for approval.

D. Root Barrier: Where specified, root barriers shall be installed on all tree and palm material in accordance with the root barrier detail provided within the plan drawings. Root barriers shall comply with all requirements of the municipality within which they are located as well as with any utility holder requirements of any affected utilities. In the event that conflicting requirements exist between the root barrier detail provided within the plan documents and the municipality/utility holder requirements, the more stringent of the requirements shall be applicable.

E. Planter Edging: Use only where specifically indicated on plans. Edging shall be the color black.

F. Anti-desiccant: shall be an emulsion specifically manufactured for agricultural use, which provides a protective film over plant surfaces. Anti-desiccants shall be delivered in containers of the manufacturer and shall be mixed according to the manufacturer's directions. Submit manufacturer literature for approval.

III. Materials for Soil Amendment

A. Pine Bark: Horticultural-grade milled pine bark, with 80 percent of the material by volume sized between 0.1 and 15.0 mm.

1. Pine bark shall be aged sufficiently to break down all woody material. Pine bark shall be screened.
2. pH shall range between 4 and 7.0.
3. Submit manufacturer literature for approval.

B. Organic Matter: Leaf matter and yard waste composted sufficiently to break down all woody fibers, seeds, and leaf structures, and free of toxic and nonorganic matter. Organic matter shall be commercially prepared compost. Submit 0.5 kg (1 lb) sample and suppliers literature for approval.

C. Course Sand: Course concrete sand, ASTM C-33 Fine Aggregate, with a Fines Modulus Index of 2.75 or greater.

1. Sands shall be clean, sharp, natural sands free of limestone, shale and slate particles.
2. Provide the following particle size distribution:

| Sieve | Percentage Passing |
|---|---|
| 3/8 in (9.5 mm) | 100 |
| No. 4 (4.75 mm) | 95-100 |
| No. 8 (2.36 mm) | 80-100 |
| No. 16 (1.18 mm) | 50-85 |
| No. 30 (0.60 mm) | 25-60 |
| No. 50 (0.30 mm) | 10-30 |
| No. 100 (0.15 mm) | 2-10 |

D. Lime: shall be ground, palletized, or pulverized lime manufactured to meet agricultural standards and contain a maximum of 60 percent oxide (i.e. calcium oxide plus magnesium oxide). Submit manufacturer literature for approval.

E. Sulfur: shall be flowers of sulfur, pelletized or granular sulfur, or iron sulfate. Submit manufacturer literature for approval.

F. Fertilizer: Agricultural fertilizer of a formula indicated by the soil test. Fertilizers shall be organic, slow-release compositions whenever applicable. Submit manufacturer literature for approval.

IV. Planting Mix

A. Planting Mix

1. Planting Mix for Trees, Shrubs, Groundcovers and vines: Check with landscape architect for appropriate mixture.
2. Planting Mix for Palms: Mixture of course sand and peat mixed to the following proportion:

| Component | Percent by Volume |
|---|---|
| Coarse Sand | 75% |
| Peat | 25% |

B. Planting mix shall be thoroughly mixed, screened, and shredded.

C. Prior to beginning the mixing process, submit a 1-kg (2-lb) sample of the proposed mix with soil test results that indicate the mix ratio and the results achieved.

D. During the mixing process but prior to installing the mix, submit a 1-kg (2-lb) sample for each 200 cubic meters (250 cubic yards) of planting mix, taken randomly from the finished soil mix, with soil test results for approval. In the event that the test results do not meet the required particle size distribution, remix and resubmit a revised planting mix.

E. Make all amendments of lime/sulfur and fertilizer indicated by the soil test results at the time of mixing.

F. All mixing shall take place in the contractors yard, using commercial mixing equipment sufficient to thoroughly mix all components uniformly

G. Protect the planting mix from erosion prior to installation.

## Part 3. Execution

I. Excavation of Planted Areas

A. Locations for plants and/or outlines of areas to be planted are to be staked out at the site. Locate and mark all subsurface utility lines. Approval of the stakeout by the landscape architect is required before excavation begins.

B. Tree, shrub, and groundcover beds are to be excavated to the depth and widths indicated on the landscape plan detail drawings. If the planting area under any tree is initially dug too deep, the soil added to bring it up to the correct level should be thoroughly tamped.

1. The sides of the excavation of all planting areas shall be sloped at a 45 degrees. The bottom of all beds shall slope parallel to the proposed grades or toward any subsurface drain lines within the planting bed. The bottom of the planting bed directly under any tree shall be horizontal such that the tree sits plumb.
2. Maintain all required angles of repose of the adjacent materials as shown on the drawings. Do not excavate compacted subgrades of adjacent pavement or structures.
3. Subgrade soils shall be separated from the topsoil, removed from the area, and not used as backfill in any planted or lawn area. Excavations shall not be left uncovered or unprotected overnight.

C. For trees and shrubs planted in individual holes in areas of good soil that is to remain in place and/or to receive amendment in the top 150-mm (6 in.) layer, excavate the hole to the depth of the root ball and to widths shown on the drawing. Slope the sides of the excavation at a 45 degree angle up and away from the bottom of the excavation.

1. In areas of slowly draining soils, the root ball may be set up to 75 mm (3 in.) or 1/8 of the depth of the root ball above the adjacent soil level.
2. Save the existing soil to be used as backfill around the tree.
3. On steep slopes, the depth of the excavation shall be measured at the center of the hole and the excavation dug as shown on the drawings.

D. Detrimental soil conditions: The landscape architect is to be notified, in writing, of soil conditions encountered, including poor drainage, that the contractor considers detrimental to the growth of plant material. When detrimental conditions are uncovered, planting shall be discontinued until instructions to resolve the conditions are received from the landscape architect.

E. Obstructions: If rock, underground construction work, utilities, tree roots, or other obstructions are encountered in the excavation of planting areas, alternate locations for any planting shall be determined by the landscape architect.

II. Installation of Planting Mix

A. Prior to the installation of the planting mix, install subsurface drains, irrigation main lines, lateral lines, and irrigation risers shown on the drawings.

B. The landscape architect shall review the preparation of subgrades prior to the installation of planting mix.

C. Do not proceed with the installation of planting mix until all utility work in the area has been installed.

D. Protect adjacent walls, walks, and utilities from damage or staining by the soil. Use 12-mm (1/2 in.) plywood and/or plastic sheeting as directed to cover existing concrete, metal, masonry work, and other items as directed during the progress of the work.

1. Clean up any soil or dirt spilled on any paved surface at the end of each working day.
2. Any damage to the paving or architectural work caused by the soils installation contractor shall be repaired by the general contractor at the soils installation contractors expense.

E. Till the subsoil into the bottom layer of topsoil or planting mix.

1. Loosen the soil of the subgrade to a depth of 50 to 75 mm (2 to 3 in.) with a rototiller or other suitable device.
2. Spread a layer of the specified topsoil or planting mix 50 mm (2 in.) deep over the subgrade. Thoroughly till the planting mix and the subgrade together.
3. Immediately install the remaining topsoil or planting mix in accordance with the following specifications. Protect the tilled area from traffic. DO NOT allow the tilled subgrade to become compacted.
4. In the event that the tilled area becomes compacted, till the area again prior to installing the planting mix.

F. Install the remaining topsoil or planting mix in 200- to 250-mm (8- to 10-in.) lifts to the depths and shown on the drawing details. The depths and grades shown on the drawings are the final grades after soil settlement and shrinkage of the organic material. The contractor shall install the soil at a higher level to anticipate this reduction of soil volume, depending on predicted settling properties for each type of soil.

1. Phase the installation of the soil such that equipment does not have to travel over already-installed topsoil or planting mixes.
2. Compact each lift sufficiently to reduce settling but not enough to prevent the movement of water and feeder roots through the soil. The soil in each lift should feel firm to the foot in all areas and make only slight heel prints. Overcompaction shall be determined by the following field percolation test.
   a. Dig a hole 250 mm (10 in.) in diameter and 250 mm (10 in.) deep.
   b. Fill the hole with water and let it drain completely. Immediately refill the hole with water, and measure the rate of fall in the water level.
   c. In the event that the water drains at a rate less than 25 mm (1 in.) per hour, till the soil to a depth required to break the overcompaction.
   d. The landscape architect shall determine the need for, and the number and location of percolation tests based on observed field conditions of the soil.
3. Maintain moisture conditions within the soils during installation to allow for satisfactory compaction. Suspend installation operations if the soil becomes wet. Do not place soils on wet subgrade.
4. Provide adequate equipment to achieve consistent and uniform compaction of the soils. Use the smallest equipment that can reasonably perform the task of spreading and compaction.
5. Add lime, sulfur, fertilizer, and other amendments during soil installation. Spread the amendments over the top layer of soil and till into the top 100 mm (4 in.) of soil. Soil amendments may be added at the same time that organic matter, when required, is added to the top layer of soil.
6. Protect soil from overcompaction after placement. An area that becomes overcompacted shall be tilled to a depth of 125 mm (6 in.). Uneven or settled areas shall be filled and regraded.

III. Fine Grading

A. It shall be the responsibility of the Contractor to finish grade (min. 6" below adjacent F.F.E.). Finish grades in planting areas shall be one inch lower than adjacent paving and are to include 3" of mulching. New earthwork shall blend smoothly into the existing earthwork, and grades shall pitch evenly between spot grades. All planted areas must pitch to drain at a minimum of 1/4" per foot. Any discrepancies not allowing this to occur shall be reported to the Landscape Architect prior to continuing work.

B. Fill all dips and remove any bumps in the overall plane of the slope.

1. The tolerance for dips and bumps in lawn areas shall be a 12-mm (1/2 in.) deviation from the plane in 3,000 mm (10 ft).
2. The tolerance for dips and bumps in shrub planting areas shall be a 25-mm (1 in.) deviation from the plane in 3,000 mm (10 ft).
3. All fine grading shall be inspected and approved by the landscape architect prior to planting, mulching, sodding, or seeding.

C. Berming shall not be placed within 10' of any existing tree nor will it be allowed to encroach upon any utility, drainage, or maintenance easement. Berming shall not impede or obstruct any necessary swales needed to drain other areas for the property.

IV. Planting Operations

A. Plants shall be set on flat-tamped or unexcavated pads at the same relationship to finished grade as they were to the ground from which they were dug, unless otherwise noted on the drawings. Plants must be set plumb and braced in position until topsoil or planting mix has been placed and tamped around the base of the root ball. Improper compacting of the soil around the root ball may result in the tree settling or leaning. Plants shall be set so that they will be at the same depth and so that the root ball does not shift or move laterally one year later.

1. Determine the elevation of the root flare and ensure that it is planted at grade. This may require that the tree be set higher than the grade in the nursery.
2. If the root flare is less than 50 mm (2 in.) below the soil level of the root ball, plant the tree the appropriate level above the grade to set the flare even with the grade. If the flare is more than 50 mm (2 in) at the center of the root ball the tree shall be rejected.

B. Lift plants only from the bottom of the root balls or with belts or lifting harnesses of sufficient width not to damage the root balls. Do not lift trees by their trunk or use the trunk as a lever in positioning or moving the tree in the planting area.

C. Remove plastic, paper, or fiber pots from containerized plant material. Pull roots out of the root mat. Loosen the potting medium and shake away from the root mat. Immediately after removing the container, install the plant such that the roots do not dry out. Pack planting mix around the exposed roots while planting.

D. The roots of bare-root trees shall be pruned at the time of planting to remove damaged or undesirable roots (those likely to become a detriment to future growth of the root system). Bare-root trees shall have the roots spread to approximate the natural position of the roots and shall be centered in the planting pit. The planting-soil backfill shall be worked firmly into and around the roots, with care taken to fill in completely with no air pockets.

E. Cut ropes or strings from the top of shrub root balls and trees smaller than 3 in. caliper after plant has been set. Remove burlap or cloth wrapping and any wire baskets from around top half of balls. Do not turn under and bury portions of burlap at top of ball.

1. Do not immediately remove the ropes and burlap from trees larger than 3 in. caliper. Return to each tree three months after planting and cut all ropes around the trunks and tops of the root balls of these trees.
2. Completely remove any waterproof or water-repellant strings or wrappings from the root ball and trunk before backfilling.

F. Set balled and burlapped trees in the hole with the north marker facing north unless otherwise approved by the landscape architect.

G. Place native soil, topsoil, or planting mix into the area around the tree, tamping lightly to reduce settlement.

1. For plants planted in individual holes in existing soil, add any required soil amendments to the soils, as the material is being backfilled around the plant. Ensure that the amendments are thoroughly mixed into the backfill.
2. For plants planted in large beds of prepared soil, add soil amendments during the soil installation process.
3. Ensure that the backfill immediately around the base of the root ball is tamped with foot pressure sufficient to prevent the root ball from shifting or leaning.

H. Solid sod shall be laid with closely abutting joints with a tamped or rolled, even surface. Stagger strips to offset joints in adjacent courses. Bring the sod edge in a neat, clean manner to the edge of all paving and shrub areas. Sod along slopes shall be pegged to hold sod in place along slopes or banks a wood peg acceptable to the Landscape Architect shall be used at no additional cost to the Owner. If, in the opinion of the Landscape Architect, top-dressing is necessary after rolling, clean sand will be evenly applied over the entire surface and thoroughly washed in without additional charge.

I. Thoroughly water all plants immediately after planting. Apply water by hose directly to the root ball and the adjacent soil.

J. Remove all tags, labels, strings, etc. from all plants.

K. Remove any excess soil, debris, and planting material from the job site at the end of each workday.

L. Form watering saucers 100 mm (4 in.) high immediately outside the area of the root ball of each tree as indicated on the drawings.

V. Relocation of Existing Material:

A. Landscape Contractor shall root prune trees which are to be relocated in accordance with approved horticultural practices and the following procedures.

1. Select a healthy tree
2. Selectively trim the canopy removing dead limbs, cross branching over crowned areas, and lower undesirable limbs. Fertilize and water trees before pruning.
3. Root prune 50% of the root system approximately 18"-2' deep (depending upon species and size). This is done by hand with sharp hand tools or a root pruning saw. The diameter of the root ball to be pruned is 8-12 inches per every one inch of diameter at breast height of the tree.
4. Back fill the existing soil with peat moss to stimulate new root growth of the pruned roots.
5. Water in thoroughly and treat with a mycorrhizae and a low nitrogen fertilizer (so not to burn the pruned roots). Brace trees if deemed necessary.
6. The root pruned tree should be watered every day (especially during warm months of the season), the equivalent of 5 gallons for every DBH of tree per day.
7. Root pruned trees should be let to stand for a minimum of 6 weeks for trees less than 8" DBH and as long as 3 months for larger specimens prior to transplanting.
8. For best results and survivorship, new root growth should be evident on root pruned trees prior to transplanting.
9. Upon transplanting, water should be applied every day as outlined in step 6 for at least one year.

VI. Staking and Guying

A. The Contractor shall stake all trees and palms in accordance with the tree and palm staking details provided within the plan drawings. Alternate methods of guying or staking may be employed with the prior approval of the Landscape Architect.

B. The Contractor shall be responsible for the replacement or adjustment of all trees, palms or shrubs that fall or lean during the guarantee period. The Contractor shall be responsible for any damage caused by the falling or leaning of trees.

C. Stakes and guys shall be installed immediately upon approval or planting, and shall be removed in accordance with the staking details provide within the plan drawings. Any tree that is not stable at the end of the warranty period shall be rejected.

VII. Pruning

A. Plants shall not be heavily pruned at the time of planting. Pruning is required at planting time to correct defects in the tree structure, including removal of injured branches, waterspouts, suckers, and interfering branches. Healthy lower branches and interior small twigs should not be removed except as necessary to clear walks and roads. In no case should more than one-quarter of the branching structure be removed. Retain the normal or natural shape of the plant.

B. All pruning shall be completed using clean, sharp tools. All cuts shall be clean and smooth, with the bark intact with no rough edges or tears.

C. Pruning of large trees shall be done from a hydraulic man-lift such that it is not necessary to climb the tree.

VIII. Mulching

A. All trees, palms, shrubs, and other plantings will be mulched with mulch previously approved by the landscape architect. The mulch shall be a minimum 3" thick layer over all tree, shrub and ground cover planting areas, unless otherwise specified. All mulch layers shall be of the specified thickness at the time of the final acceptance of the work. Mulch must not be placed within 3 inches of the trunks of trees, palms or shrubs.

B. Place mulch at least 3" in depth in a circle around all trees located in lawn areas. The diameter of the circle shall be 18" in diameter larger than the ball of the plant provided. Mulch must not be placed within 3 inches of the trunks of trees, palms or shrubs.

IX. Maintenance of Trees, Shrubs, and Vines

A. Maintenance shall begin immediately after each plant is planted and continue until its acceptance has been confirmed by the landscape architect.

B. Maintenance shall consist of pruning, watering, cultivating, weeding, mulching, fertilizing, tightening and repairing guys and stakes, resetting plants to proper grades or upright position, restoring of the planting saucer, and furnishing and applying such sprays or other materials as necessary to keep plantings free of insects and diseases and in vigorous condition.

C. Planting areas and plants shall be protected at all times against trespassing and damage of all kinds for the duration of the maintenance period. If a plant becomes damaged or injured, it shall be treated or replaced as directed by the landscape architect at no additional cost.

D. Watering: Contractor shall irrigate as required to maintain vigorous and healthy tree growth. Overwatering or flooding shall not be allowed. The contractor shall monitor, adjust, and use existing irrigation facilities, if available, and furnish any additional material, equipment, or water to ensure adequate irrigation. Root balls of all trees and large shrubs shall be spot watered using handheld hoses during the first four months after planting, as required to ensure adequate water within the root ball.

E. During periods of restricted water usage, all governmental regulations (permanent and temporary) shall be followed. The contractor may have to transport water from ponds or other sources, at no additional expense to the owner when irrigation systems are unavailable.

F. Remove soil ridges from around watering basins prior to end of maintenance period, as directed by Landscape Architect

X. Acceptance

A. The landscape architect shall inspect all work for acceptance upon written request of the contractor. The request shall be received at least ten calendar days before the anticipated date of inspection.

B. Acceptance of plant material shall be for general conformance to specified size, character, and quality and shall not relieve the contractor of responsibility for full conformance to the contract documents, including correct species.

C. Upon completion and re-inspection of all repairs or renewals necessary in the judgment of the landscape architect, the landscape architect shall certify in writing that the work has been accepted.

XI. Acceptance in Part

A. Work may be accepted in parts when the landscape architect and contractor deem that practice to be in their mutual interest. Approval must be given in writing by the landscape architect to the contractor verifying that the work is to be completed in parts. Acceptance of work in parts shall not waive any other provision of this contract.

XII. Guarantee Period and Replacements

A. The guarantee period for trees and shrubs shall begin at the date of acceptance.

B. The contractor shall guarantee all plant material to be in healthy and flourishing condition for a period of one year from the date of acceptance.

C. When work is accepted in parts, the guarantee periods extend from each of the partial acceptances to the terminal date of the guarantee of the last acceptance. Thus, all guarantee periods terminate at one time.

D. The contractor shall replace, without cost, as soon as weather conditions permit, and within a specified planting period, all plants determined by the landscape architect to be dead or in an unacceptable condition during and at the end of the guarantee period. To be considered acceptable, plants shall be free of dead or dying branches and branch tips and shall bear foliage of normal density, size, and color. Replacements shall closely match adjacent specimens of the same species. Replacements shall be subject to all requirements stated in this specification.

E. The guarantee of all replacement plants shall extend for an additional period of one year from the date of their acceptance after replacement. In the event that a replacement plant is not acceptable during or at the end of said extended guarantee period, the landscape architect may elect subsequent replacement or credit for that item.

F. At the end of the guarantee, the contractor shall reset grades that have settled below the proposed grades on the drawings.

G. The contractor shall make periodic inspections, at no extra cost, during the guarantee period to determine what changes, if any, should be made in the maintenance program. If changes are recommended, they shall be submitted in writing to the landscape architect. Claims by the contractor that the owners maintenance practices or lack of maintenance resulted in dead or dying plants will not be considered if such claims have not been documented by the contractor during the guarantee period.

XIII. Final Inspection and Final Acceptance

At the end of the guarantee period and upon written request of the contractor, the landscape architect will inspect all guaranteed work for final acceptance. The request shall be received at least ten calendar days before the anticipated date for final inspection. Upon completion and re-inspection of all repairs or renewals necessary in the judgment of the landscape architect at that time, the landscape architect shall certify, in writing, that the project has received final acceptance.

WGI™
2035 Vista Parkway, West Palm Beach, FL 33411
Phone No. 866.909.2220 www.wginc.com
Cert No. 6091 - LB No. 7055

REVISIONS

| NO. | DATE | DESCRIPTION | BY |
|---|---|---|---|
| 1 | 11-20-2020 | RESUBMITTAL | BJ |
| 2 | 12-21-2020 | RESUBMITTAL | BJ |
| 3 | 01-15-2021 | RESUBMITTAL | BJ |
| 4 | 02-24-2021 | RESUBMITTAL | BJ |

| | |
|---|---|
| CAD | 540701-LP.DWG |
| JOB NO. | 5407.01 |
| DRAWN BY | BJ/LC/DN |
| CHECK BY | TM |
| DATE | 10/07/2020 |

LANDSCAPE ARCHITECT OF RECORD
TIFFANY DELYNN MAY
FL# LA6667274

DAVIS ROAD PROPERTY
PALM SPRINGS, FL

**LANDSCAPE SPECIFICATIONS**

SHEET:
LP-6.00

Bryan Jackman C:\pwworking\wgi\bryan.jackman\d1899616\540701-LP.dwg pdf Plotted: 2/24/2021 5:08:08 PM Saved: 2/24/2021 3:24:56 PM



T163 T148 T148 T148 T148 T163

Fieldstone ARCHITECTURE & ENGINEERING

# SFL - 6 Unit - CONTEMPORARY - FRONT ELEVATION

08-07-2020

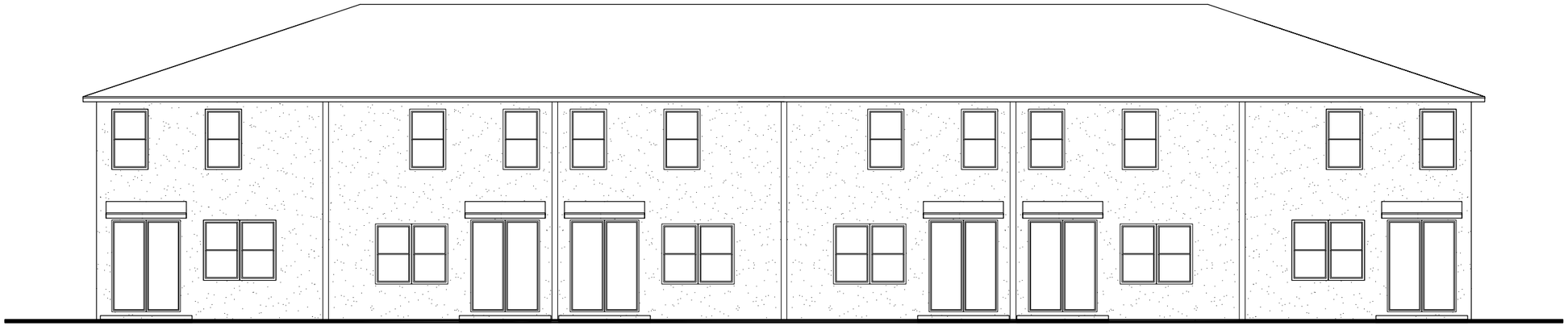

T163 T148 T148 T148 T148 T163

# SFL - 6 Unit - CONTEMPORARY - REAR ELEVATION

Fieldstone ARCHITECTURE & ENGINEERING

08-07-2020

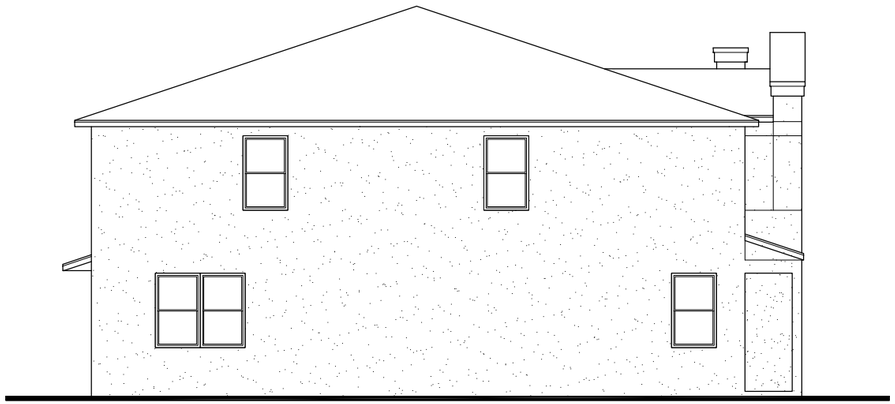

T163

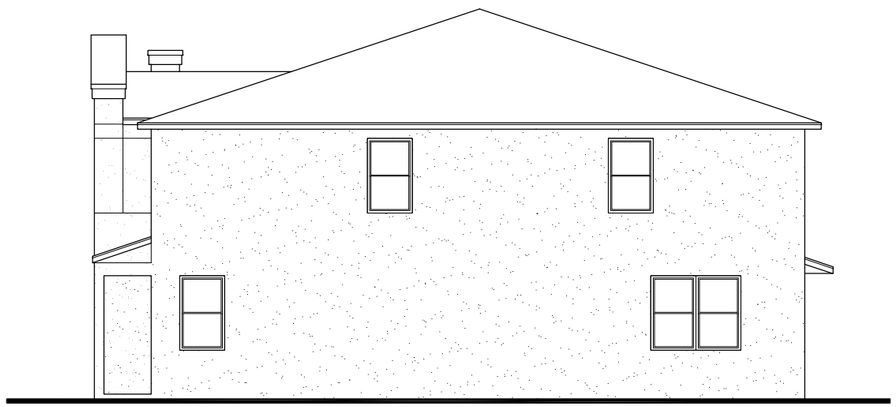

T163

# SFL - 6 Unit - CONTEMPORARY - SIDE ELEVATION

Fieldstone ARCHITECTURE & ENGINEERING

08-07-2020

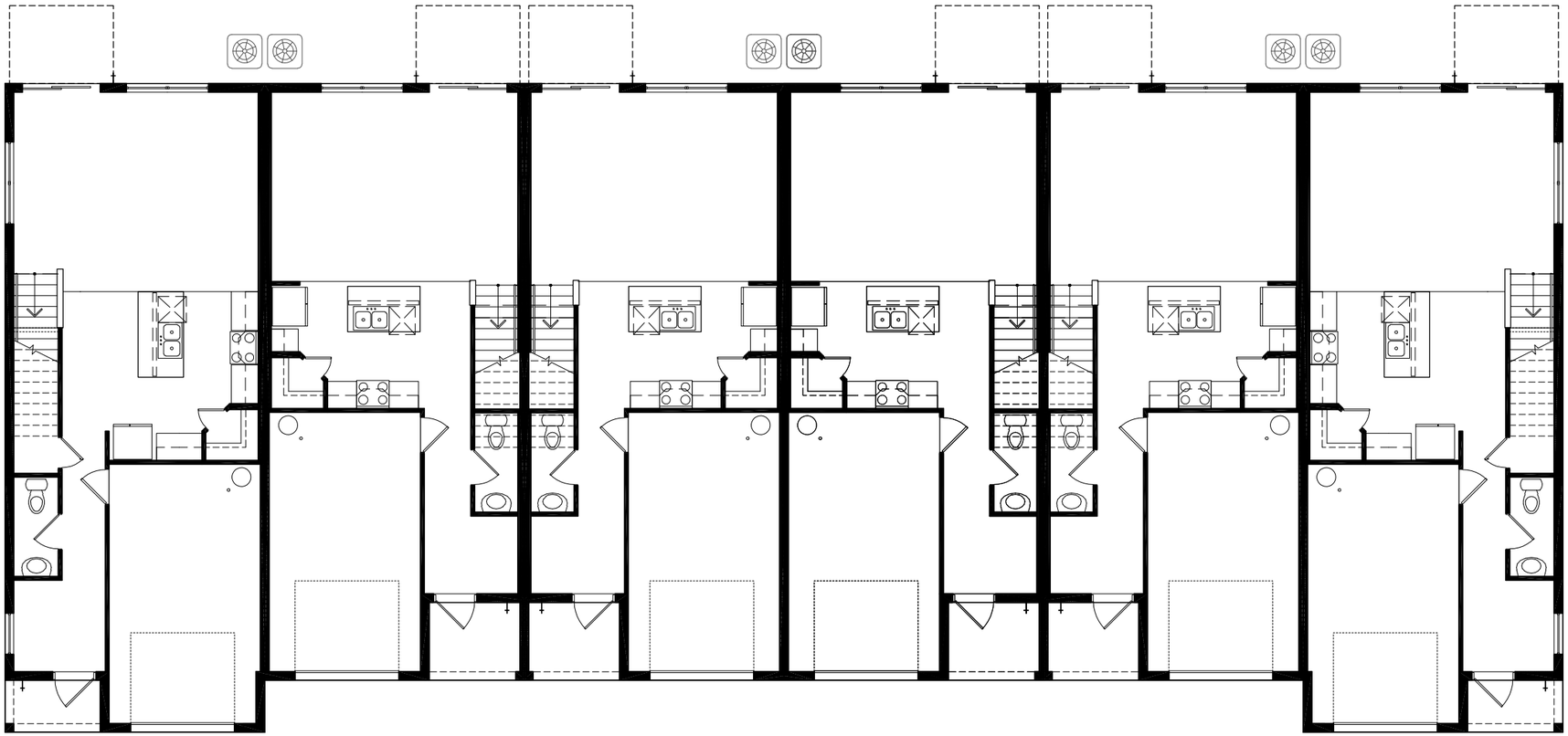

T163 T148 T148 T148 T148 T163

Fieldstone ARCHITECTURE & ENGINEERING

# SFL - 6 Unit - CONTEMPORARY - 1st floor

08-07-2020

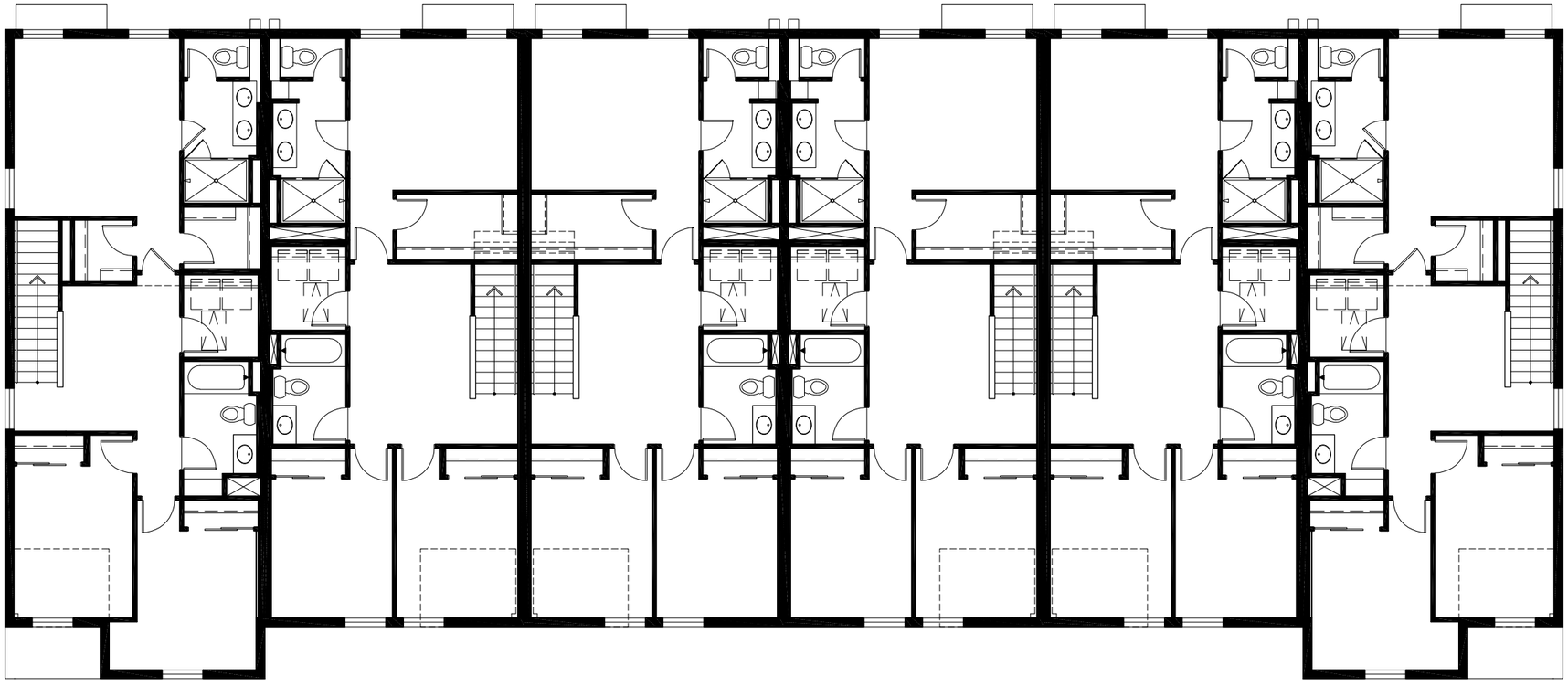

T163 T148 T148 T148 T148 T163

Fieldstone ARCHITECTURE & ENGINEERING

# SFL - 6 Unit - CONTEMPORARY - 2nd floor

08-07-2020

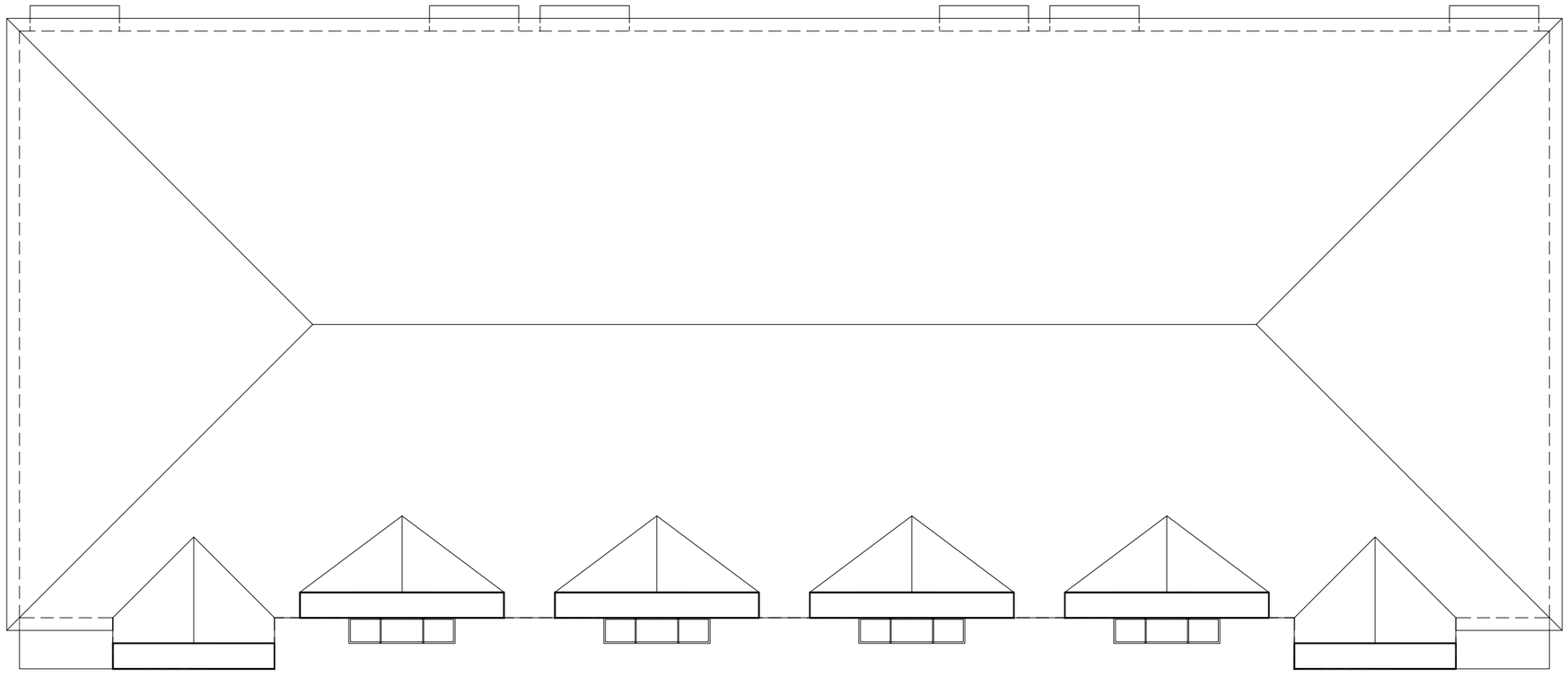

T163 T148 T148 T148 T148 T163

Fieldstone ARCHITECTURE & ENGINEERING

# SFL - 6 Unit - CONTEMPORARY - Roof

08-07-2020



T163 T148 T148 T148 T148 T148 T163

Fieldstone ARCHITECTURE & ENGINEERING

# SFL - 7 Unit - CONTEMPORARY - FRONT ELEVATION

08-07-2020



T163 T148 T148 T148 T148 T148 T163

Fieldstone ARCHITECTURE & ENGINEERING

# SFL - 7 Unit - CONTEMPORARY - REAR ELEVATION

08-07-2020

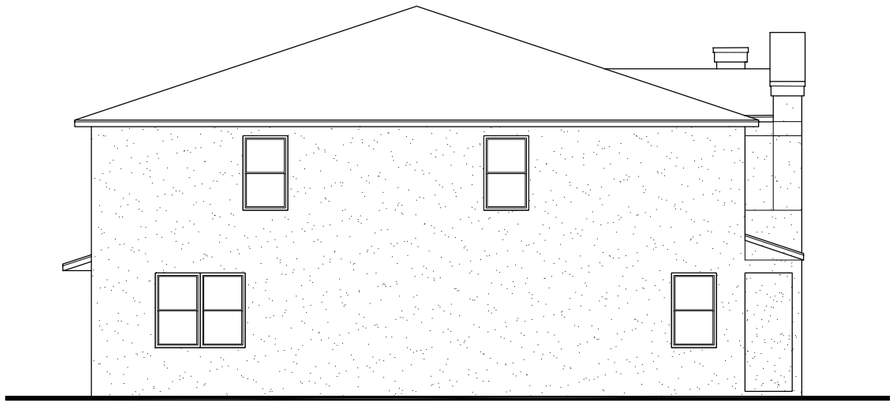

T163

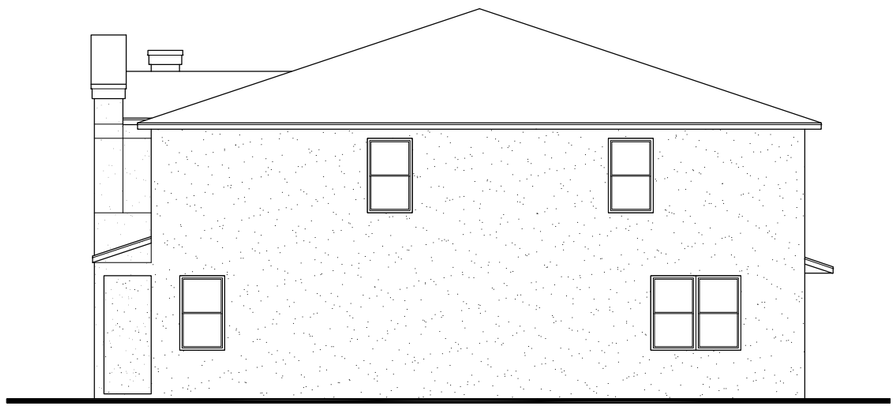

T163

# SFL - 7 Unit - CONTEMPORARY - SIDE ELEVATION

Fieldstone ARCHITECTURE & ENGINEERING

08-07-2020



T163 T148 T148 T148 T148 T148 T163

Fieldstone ARCHITECTURE & ENGINEERING

# SFL - 7 Unit - CONTEMPORARY - 1st floor

08-07-2020

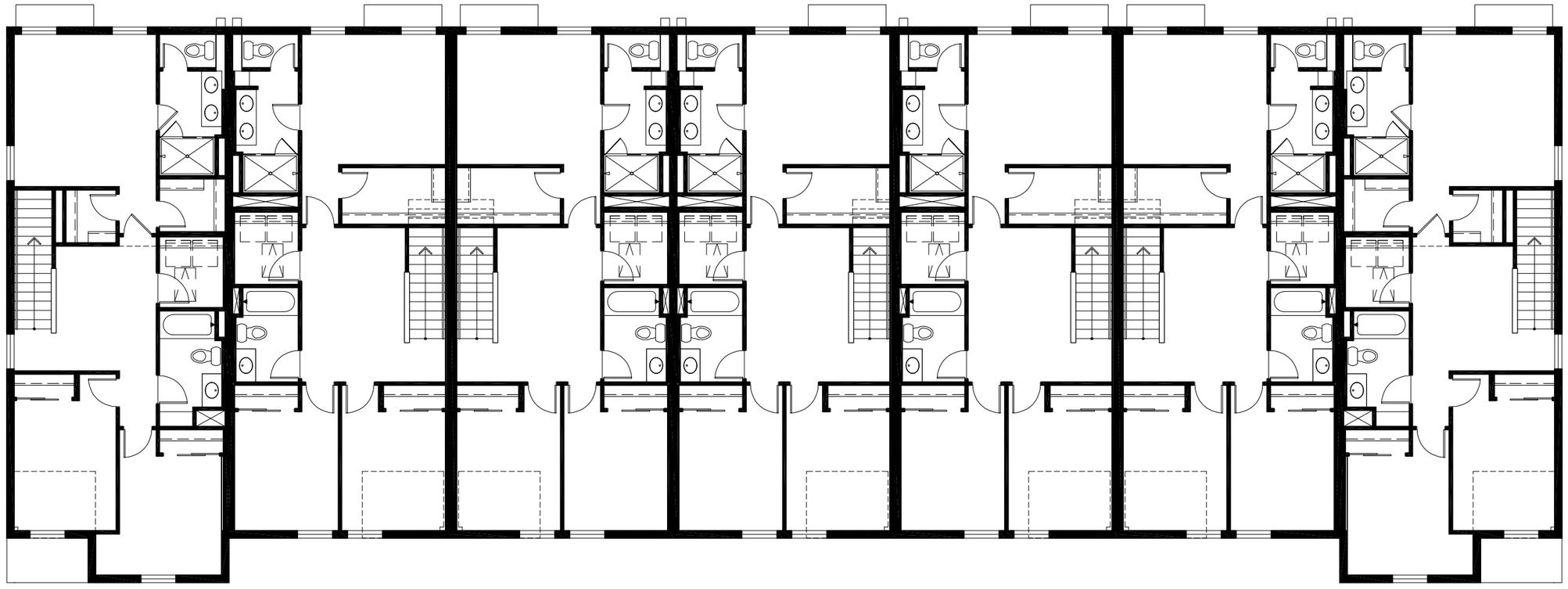

T163 T148 T148 T148 T148 T148 T163

Fieldstone ARCHITECTURE & ENGINEERING

# SFL - 7 Unit - CONTEMPORARY - 2nd floor

08-07-2020

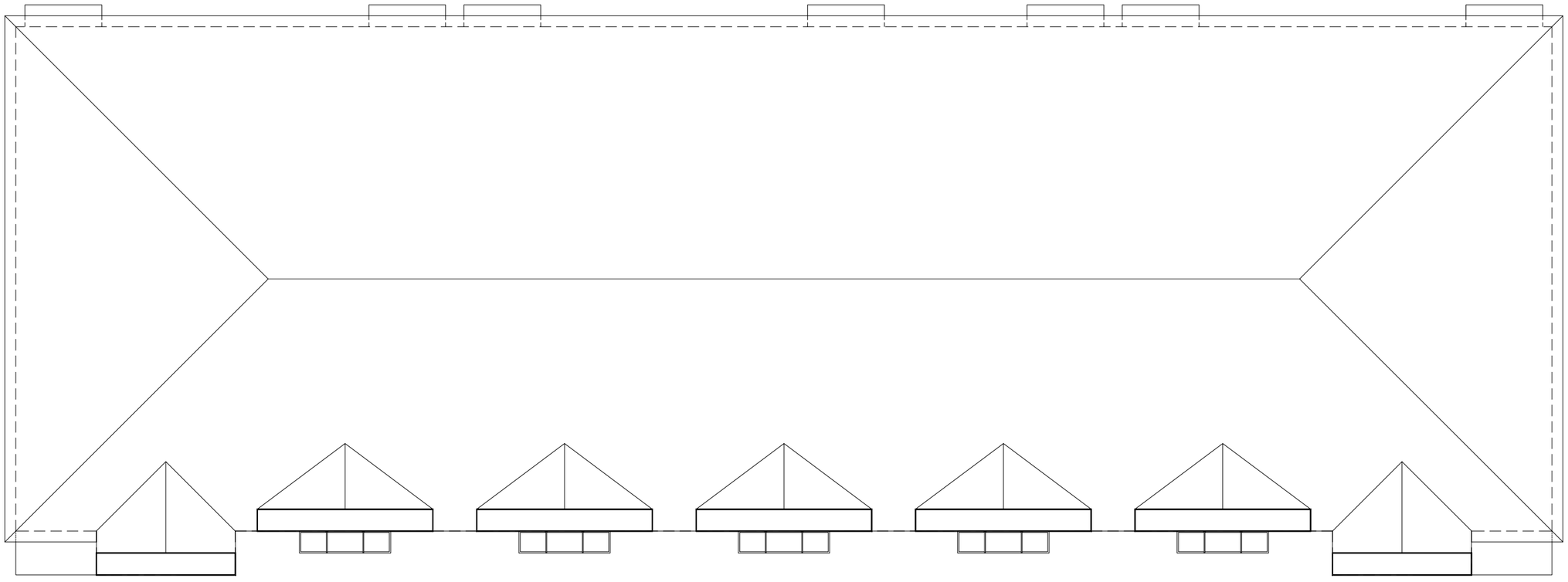

T163 T148 T148 T148 T148 T148 T163

Fieldstone ARCHITECTURE & ENGINEERING

# SFL - 7 Unit - CONTEMPORARY - Roof

08-07-2020

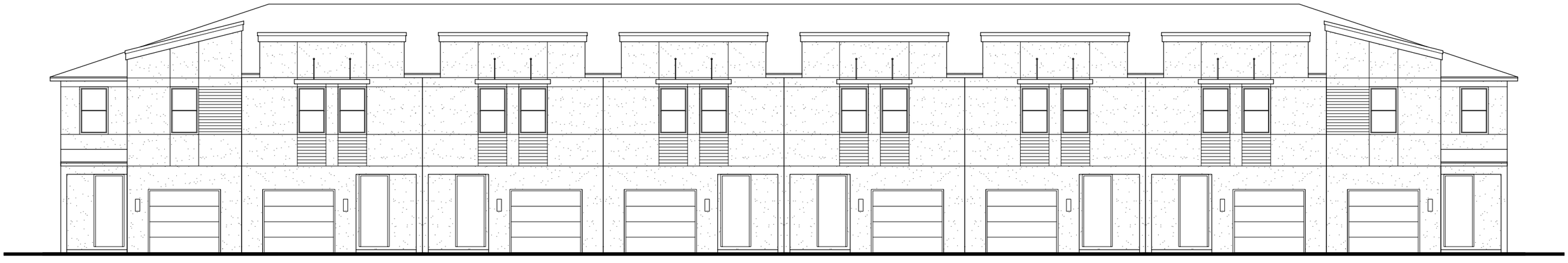

T163 T148 T148 T148 T148 T148 T148 T148 T163

# SFL - 8 Unit - CONTEMPORARY - FRONT ELEVATION

Fieldstone ARCHITECTURE & ENGINEERING

08-07-2020



T163 T148 T148 T148 T148 T148 T148 T163

Fieldstone ARCHITECTURE & ENGINEERING

# SFL - 8 Unit - CONTEMPORARY - REAR ELEVATION

08-07-2020

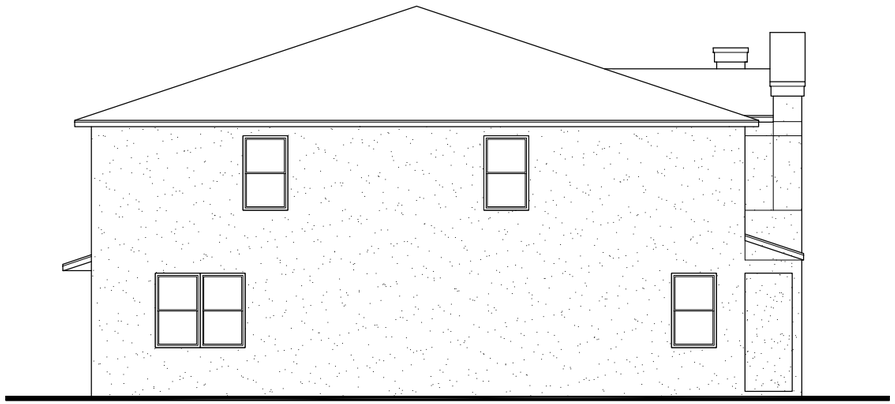

T163

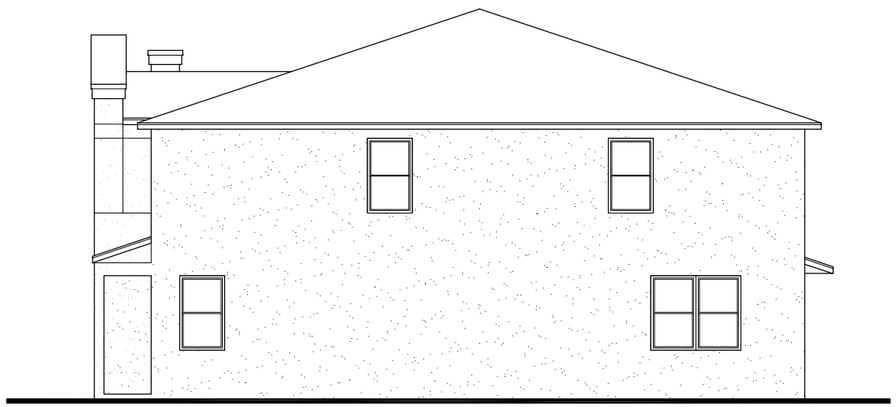

T163

Fieldstone ARCHITECTURE & ENGINEERING

# SFL - 8 Unit - CONTEMPORARY - SIDE ELEVATION

08-07-2020

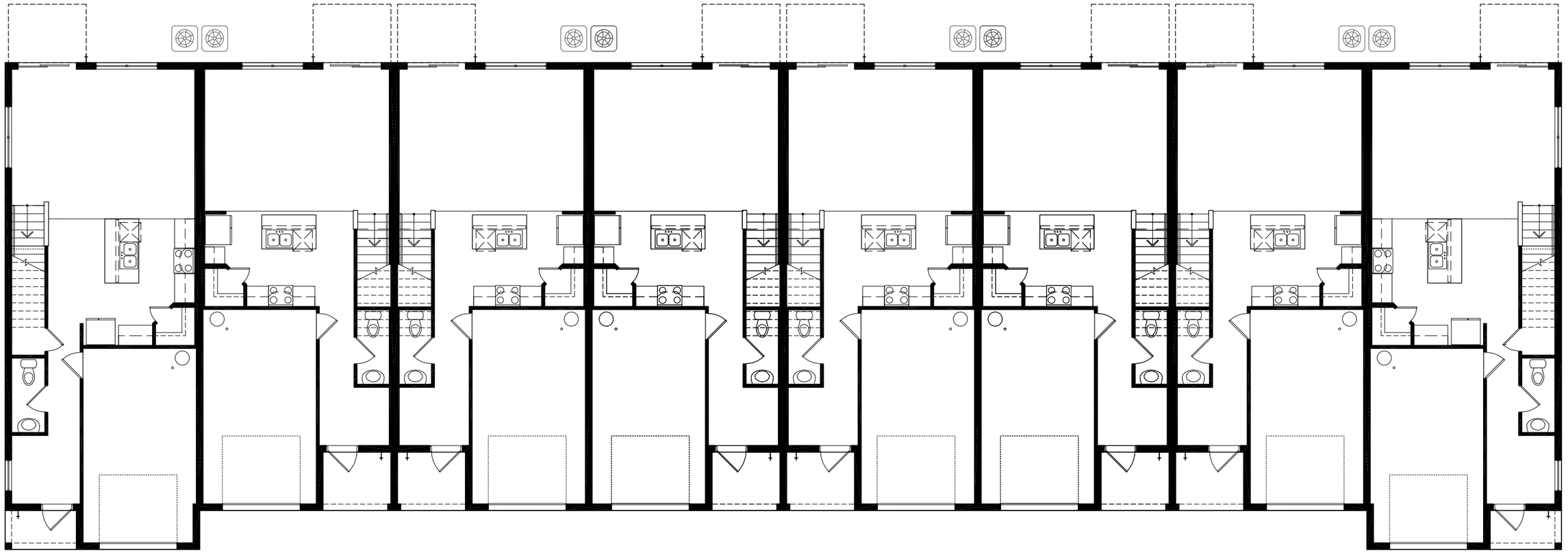

T163 T148 T148 T148 T148 T148 T148 T163

Fieldstone ARCHITECTURE & ENGINEERING

# SFL - 8 Unit - CONTEMPORARY - 1st floor

08-07-2020

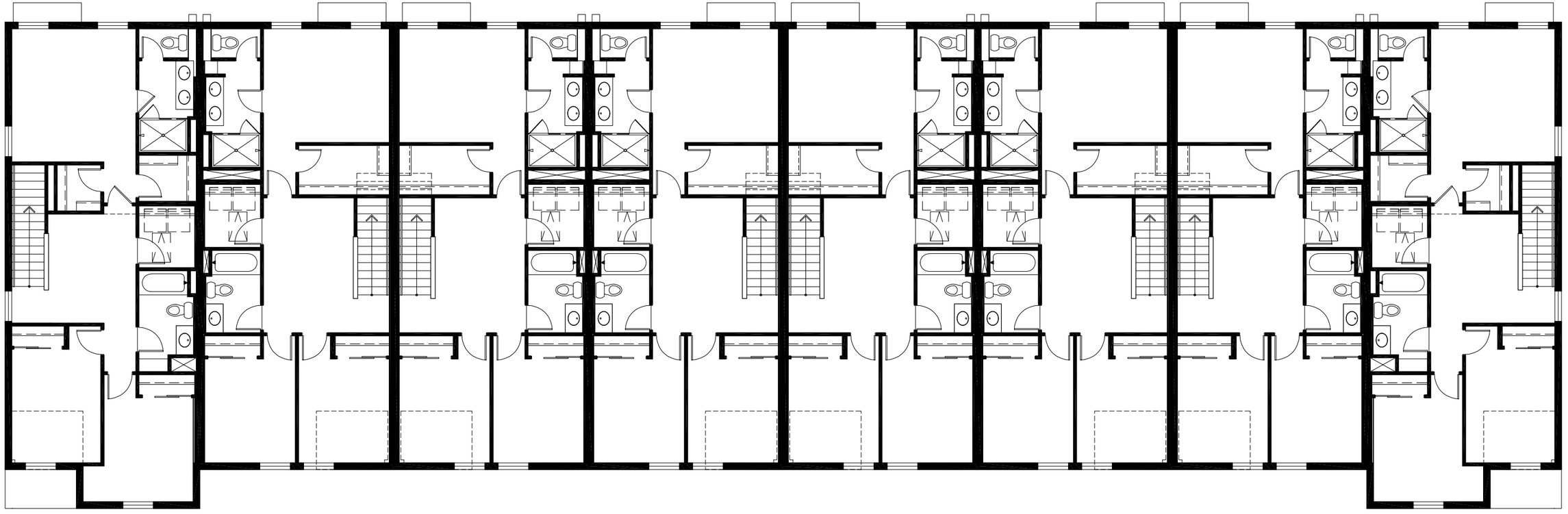

T163 T148 T148 T148 T148 T148 T148 T163

Fieldstone ARCHITECTURE & ENGINEERING

# SFL - 8 Unit - CONTEMPORARY - 2nd floor

08-07-2020

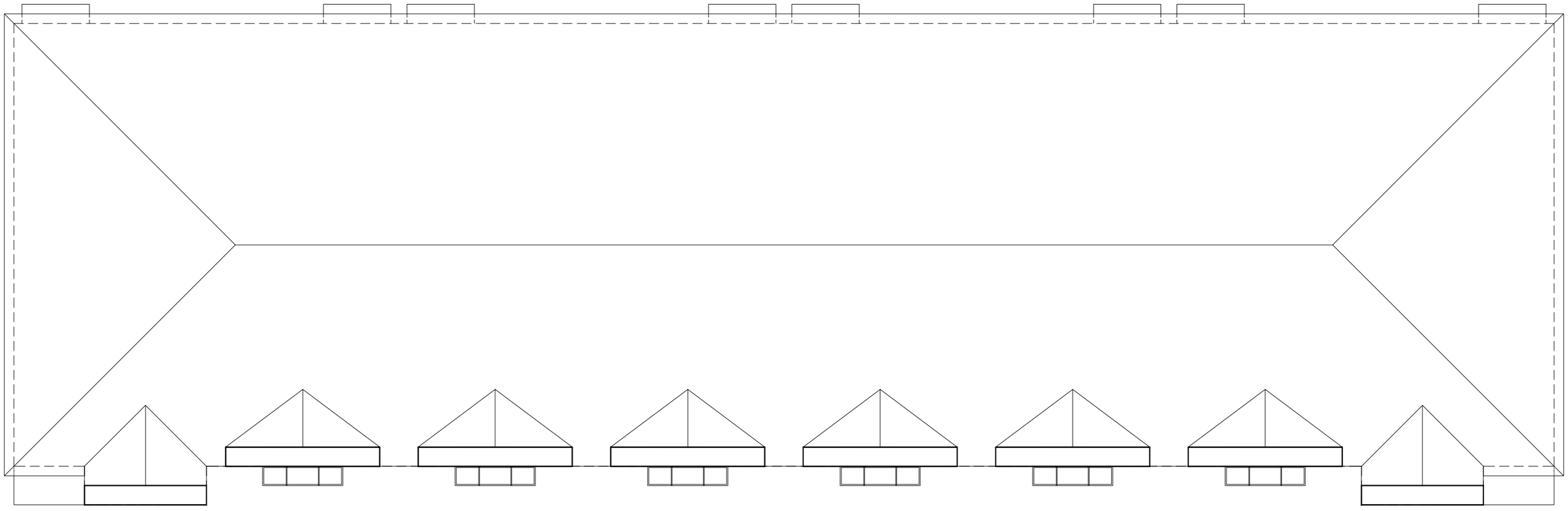

T163 T148 T148 T148 T148 T148 T148 T148 T163

Fieldstone ARCHITECTURE & ENGINEERING

# SFL - 8 Unit - CONTEMPORARY - Roof

08-07-2020

## SITE DATA

| | |
|---|---|
| GROSS SITE AREA | 4.73 AC. |
| NET SITE AREA | 4.48 AC. |
| TOTAL PROPOSED UNITS (TOWNHOME) | 59 D.U. |
| GROSS DENSITY | 12.5 D.U./AC. |
| OPEN SPACE REQUIRED | 1.57 AC.(35%) |
| OPEN SPACE PROVIDED | 1.87 AC.(41%) |
| COMMON AMENITY REQUIRED/PROVIDED | 0.31 AC.(20% OF OPEN SPACE) |
| DRY DETENTION AREA | 0.36 AC. |

COCONUT ROAD

DAVIS ROAD

DRY DETENTION
0.32 AC.

DRY DETENTION
0.04 AC.

RECREATION AREA
0.31 AC.

TOT LOT

# Fontana Townhomes

Site Plan Graphic

N

0′ 15′ 30′ 60′ 90′

SCALE: 1″ = 30′-0″

WGI

# SCHEME 1 of 3


DRIFT OF MIST SW 9166
IRON ORE SW 7069
ALPACA SW 7022
EXTRA WHITE SW 7006
ACTUAL COLOR MAY VARY FROM ON-SCREEN PRESENTATION

# SCHEME 2 of 3


DRIFT OF MIST SW 9166
IRON ORE SW 7069
PASSIVE SW 7064
EXTRA WHITE SW 7006
ACTUAL COLOR MAY VARY FROM ON-SCREEN PRESENTATION

# SCHEME 3 of 3


DRIFT OF MIST SW 9166
NORTH STAR SW 6246
IRON ORE SW 7069
EXTRA WHITE SW 7006
ACTUAL COLOR MAY VARY FROM ON-SCREEN PRESENTATION

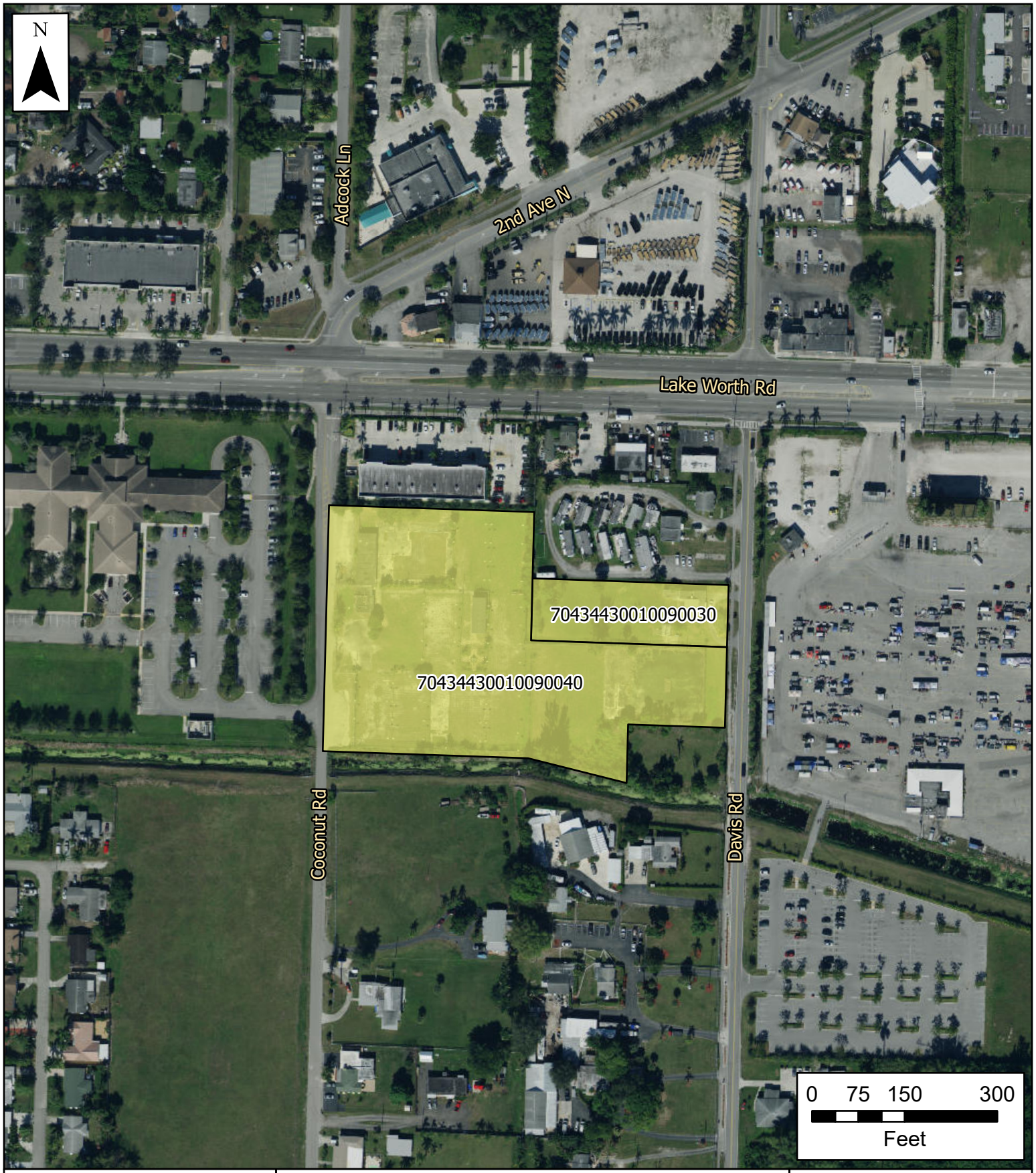


# Village of Palm Springs

## Fontana Townhomes

Property Boundary

The Data is provided "as is" without warranty or any representation of accuracy, timeliness or completeness. The burden for determining accuracy, completeness, timeliness, merchantability and fitness for or the appropriateness for use rests solely on the requester. The Village of Palm Springs make no warranties, express or implied, as to the use of the licensed Data. There are no implied warranties of merchantability or fitness for a particular purpose. The requester acknowledges and accepts the limitations of the Data, including the fact that the Data is dynamic and is in a constant state of maintenance, correction and update

Data Source: Property boundary provided by Palm Beach County, World Imagery Basemap provided by ESRI Online Services.

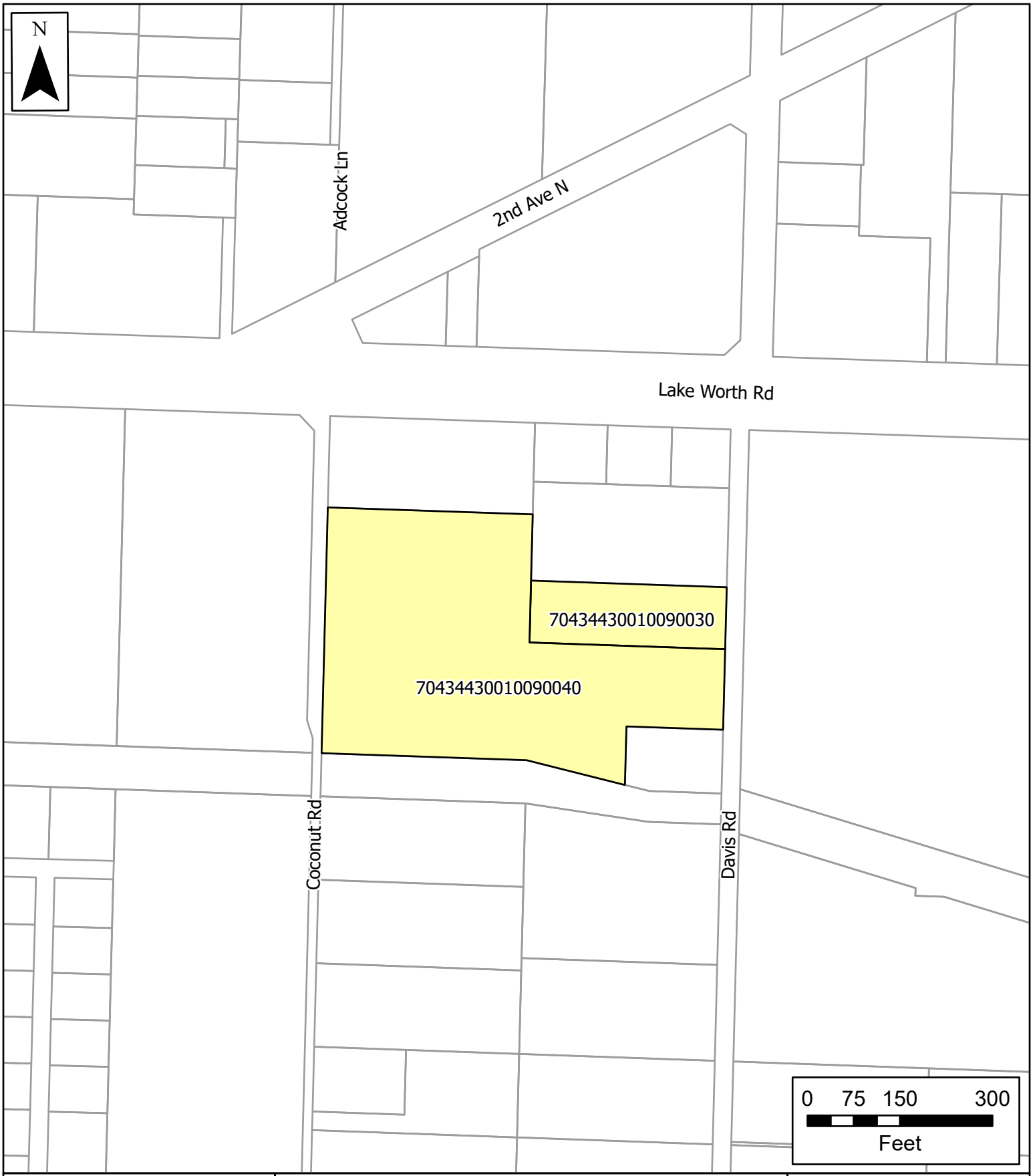


# Village of Palm Springs

## Fontana Townhomes

Parcels

Property Boundary

The Data is provided "as is" without warranty or any representation of accuracy, timeliness or completeness. The burden for determining accuracy, completeness, timeliness, merchantability and fitness for or the appropriateness for use rests solely on the requester. The Village of Palm Springs make no warranties, express or implied, as to the use of the licensed Data. There are no implied warranties of merchantability or fitness for a particular purpose. The requester acknowledges and accepts the limitations of the Data, including the fact that the Data is dynamic and is in a constant state of maintenance, correction and update

Data Source: Parcels provided by Palm Beach County

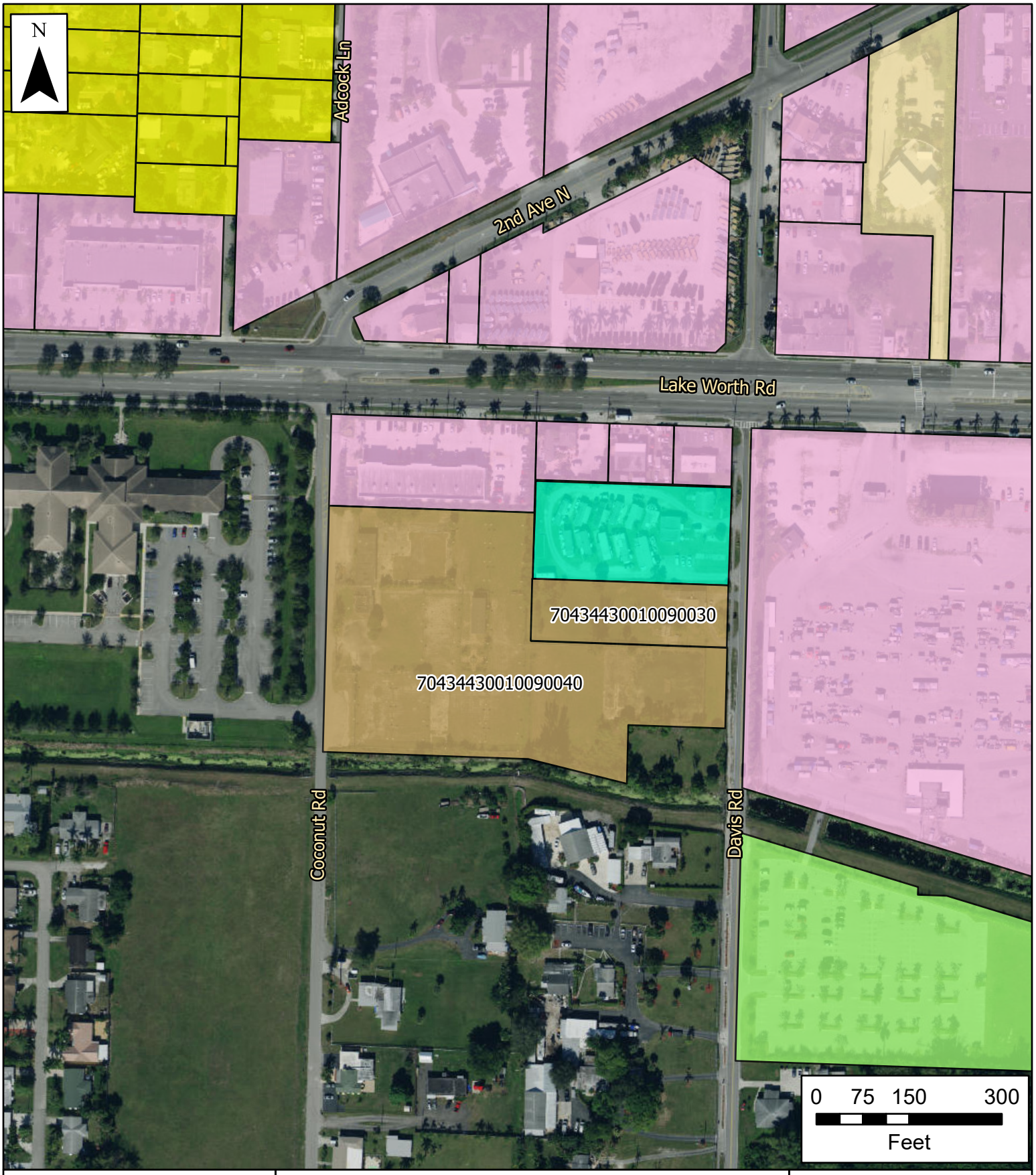


# Village of Palm Springs

## Fontana Townhomes

## Future Land Use Map

- Commercial
- High Density Residential
- Low Density Residential
- Medium Density Residential
- Public Buildings and Facilities
- County FLU

The Data is provided "as is" without warranty or any representation of accuracy, timeliness or completeness. The burden for determining accuracy, completeness, timeliness, merchantability and fitness for or the appropriateness for use rests solely on the requester. The Village of Palm Springs make no warranties, express or implied, as to the use of the licensed Data. There are no implied warranties of merchantability or fitness for a particular purpose. The requester acknowledges and accepts the limitations of the Data, including the fact that the Data is dynamic and is in a constant state of maintenance, correction and update

Data Source: Parcels provided by Palm Beach County, FLU provided by the Village of Palm Springs

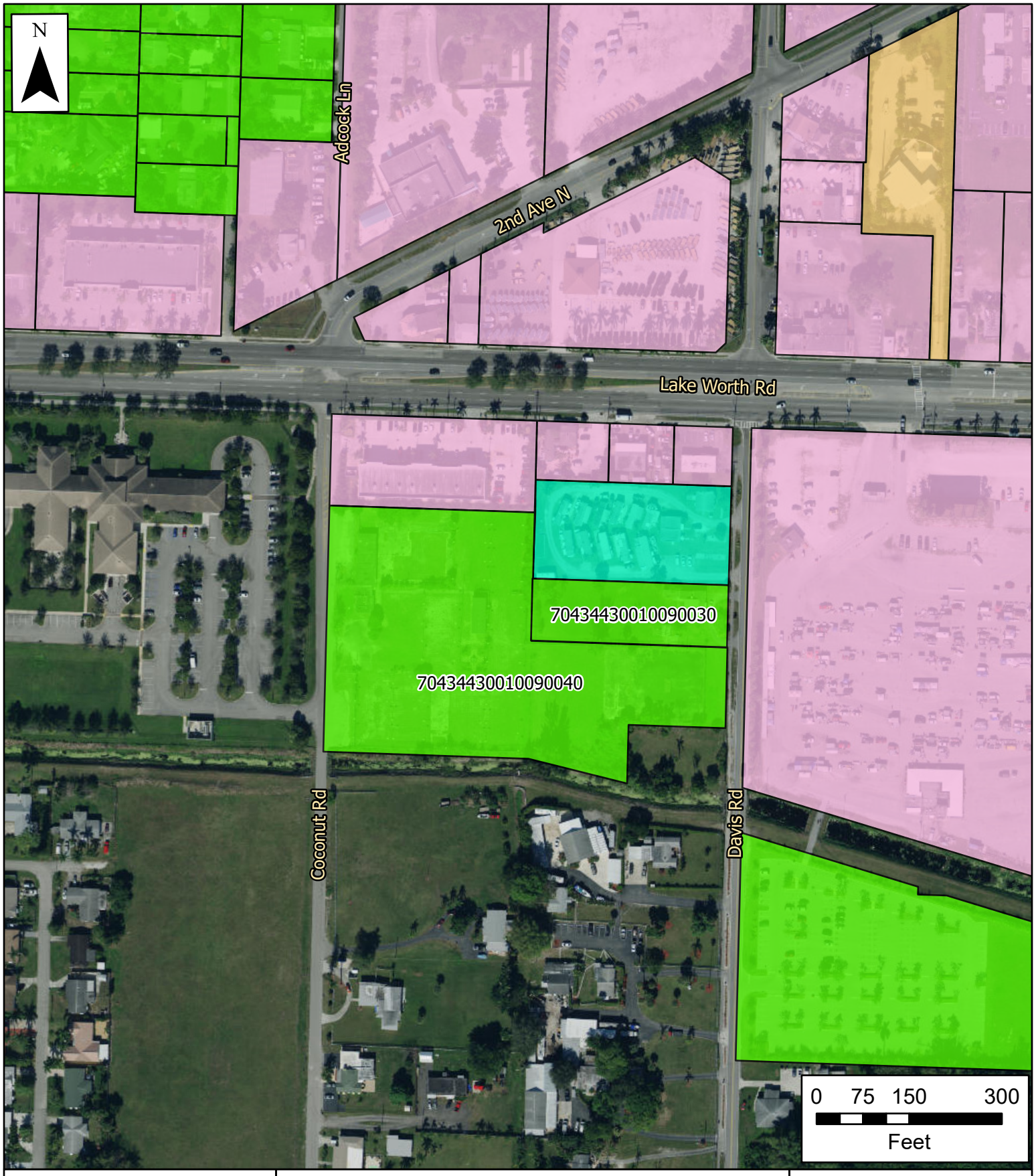


# Village of Palm Springs

## Fontana Townhomes

## Zoning Map

County Zoning
CG (Commercial General)
G (Governmental)
RM (Residential Multi-Family)

The Data is provided "as is" without warranty or any representation of accuracy, timeliness or completeness. The burden for determining accuracy, completeness, timeliness, merchantability and fitness for or the appropriateness for use rests solely on the requester. The Village of Palm Springs make no warranties, express or implied, as to the use of the licensed Data. There are no implied warranties of merchantability or fitness for a particular purpose. The requester acknowledges and accepts the limitations of the Data, including the fact that the Data is dynamic and is in a constant state of maintenance, correction and update

Data Source: Parcels provided by Palm Beach County, Zoning provided by the Village of Palm Springs

# Village of Palm Springs

# Executive Brief

**AGENDA DATE:** May 13, 2021

**DEPARTMENT:** Planning, Zoning & Building

---

**ITEM 9.4:**

Resolution 2021-03 - Site Development Plan Amendment - Fontana Townhomes Residential Planned Development Site Plan (SPR21-02) - 4063 Davis Road and 4090 Coconut Road *(Quasi-Judicial Hearing)*

**SUMMARY:**

Jerrod Purser, agent for Meritage Homes of Florida, Inc., is requesting site development plan approval (SPR2021-02) for a residential planned development project for the combination of the properties located at 4063 Davis Road and 4090 Coconut Road. The applicant is proposing to develop the 4.73 acres site with the construction of 59 two-story fee-simple townhomes. Each townhome will be a three-bedroom home with a one car garage and a driveway with space for two cars.

The buildings will be configured with five (5) 6-townhome units, three (3) 7-townhome units and one (1) 8-townhome unit for a total of nine (9) buildings. The community will have two access driveways via the existing Davis Road and Coconut Road right-of-way. Amenities include a tot lot with playground equipment, a shade structure, picnic table and sports field for lawn games.

Note: The Village Code - Section 34-1063(c) Waivers - provides that waivers may be granted by the Village Council following and advisory recommendation by the Planning & Zoning Board. All requests for waivers shall be identified on the site plan and shall accompany an application for site plan approval of planned development.

The applicant is requesting four (4) waivers for the proposed RPD site plan:

1. Relief from Sec.34-1328 - Allow a 20' wide drive aisle rather than the required 26' wide drive aisle for 2-way traffic
2. Relief from Sec.34-1063(a)(1) - Allow one sidewalk along the street rather than the required sidewalks on both sides of the street
3. Relief from Sec.34-766(1) - Allow 59 townhomes to be constructed on a 4.73-acre property rather than 12.55 acres minimum lot size.
4. Relief from Sec.34-1064(1)(b) - Allow a 15' side setback rather than the required 20' side setback.

Note: Based on the property standards within the Residential Multi-Family (RM) zoning district (specifically the minimum lot area requirements) outlined in Village Code section 34-766(1), this proposed 4.73-acre parcel could only support a maximum of 23 dwelling units rather than the proposed fifty-nine (59) by the developer. The applicant is seeking one (1) waiver in order to obtain approval as a Residential Planned Development (RPD) and therefore the ability to maximize density on the property with fifty-nine (59) townhomes.

The Applicant is requesting a Future Land Use Amendment and Rezoning which are subject of a separate agenda item. Approval of the Residential Planned Development site plan is dependent of the approval of the Land Use Amendment and Rezoning.

The Planning & Zoning Board considered the requested RPD during its regular meeting on March 9, 2021 and recommended approval, but were not in favor of requiring the school contribution.

Planning, Zoning & Building Staff does not object to the Residential Planned Development Site Plan with four (4) waivers and recommends conditional approval of the proposed development subject to forty-eight (48) conditions.

**FISCAL IMPACT:**

The proposed project is expected to increase the Village's assessed property valuation.

**ATTACHMENTS:**

Proposed Resolution No. 2021-03 - Site Development Plan Amendment - 4063 Davis Road & 4090 Coconut Road - SPR21-02
Exhibit "A" Staff Recommendation and Conditions of Approval
Project Narrative and Justification Statement
Site Plan, Landscape Plans, Architectural Plans, Civil Plans and Letters
Color Site Plan and Color Rendering
Legal Descriptions
Aerial, Location, FLU and Zoning Maps
Lake Worth Herald Advertisement Dates: February 25, 2021, March 25, 2021, and April 29, 2021

# RESOLUTION NO. 2021-03

**A RESOLUTION OF THE VILLAGE COUNCIL OF THE VILLAGE OF PALM SPRINGS, FLORIDA, REQUESTING (APPROVING/DENYING), WITH CONDITIONS, A SITE PLAN, (SPR21-02) FOR THE CONSTRUCTION OF A RESIDENTIAL PLANNED DEVELOPMENT PROJECT CONSISTING OF NINE (9) BUILDINGS (APPROXIMATELY 50,000 SQUARE FEET) WITH 59 TWO-STORY TOWNHOMES, LOCATED AT 4063 DAVIS ROAD & 4090 COCONUT ROAD AND PROVIDING FOR AN EFFECTIVE DATE.**

**WHEREAS,** WGI, Agent for Meritage Homes of South Florida ("Applicant") is requesting a Site Development Plan (SPR21-02) for a Residential Planned Development Project with four (4) waivers. The proposed project is ±4.73 gross acres (gross area) acres, located at 4063 Davis Road & 4090 Coconut Road; and

**WHEREAS,** WGI, Agent for Meritage Homes of South Florida, is requesting the following four (4) waivers:

1) Requesting a waiver from Sec.34-1328 to allow a 20' drive aisle instead of 26' required.

2) Requesting a waiver from Sec.34-1063(a)(1) to allow for one sidewalk on a street or primary driveway interconnected with other pedestrian ways instead of sidewalks on both sides of the main street.

3) Requesting a waiver from Sec.34-766(1) to allow the construction of 59 residential dwelling units within 4.73 acres instead of 12.55 acres minimum required within the RM district.

4) Requesting a waiver from Sec.34-1064(1)(b) to allow a 15' side setback instead of 20' minimum required.

**WHEREAS,** the recommendation of the Planning, Zoning and Building Department is to approve this application, subject to staff report conditions; and

**WHEREAS,** the Village Council and Planning & Zoning Board has heard this matter in public session; has considered the presentation and other evidence presented by the Applicant; has received and considered the recommendations of the Village Staff; and has otherwise been fully informed regarding this matter.

**NOW THEREFORE, BE IT RESOLVED BY THE VILLAGE COUNCIL OF THE VILLAGE OF PALM SPRINGS, FLORIDA:**

**Section 1.** The Village Council having received and considered the request of WGI, Agent for Meritage Homes of Florida, Inc. ("Applicant"), for approval of Site Development Plan (SPR21-02) and four (4) waivers within the proposed Residential Planned Development.

Note: Within the proposed Site Development Plan Amendment, the Applicant is requesting four (4) waivers:

The Planning & Zoning Board ("Board") considered these requests during their March 9, 2021 meeting and in light of the applicable legal criteria set forth in Chapter 34 of the Palm Springs Code and the sworn testimony and other evidence presented at public hearing, and the Board recommended approval of the application, finding that good cause for the waivers has been shown and they have been demonstrated to be in harmony with the purpose, objectives, and performance standards of this subdivision based upon the criteria set forth in Palm Springs Code Section 34-1063(c).

_____**Having been otherwise fully apprised of the premises herein, the Village Council hereby adopts the findings of the Board and approves the said application as revised, with the staff report conditions attached hereto as Exhibit "A", and which is incorporated herein by reference**.

**OR**

**_____Having been otherwise fully apprised of the premises herein, the Village Council hereby rejects the Board findings and denies the application, finding that good cause for the waivers has NOT been shown and they have NOT been demonstrated to be in harmony with the purpose, objectives, and performance standards of this subdivision based upon the criteria set forth in Palm Springs Code Section 34-1063(c), for the following reason(s):**

_____
_____
_____

Notwithstanding any exceptions, conditions or other approvals granted herein, the applicant must conform to all other applicable codes, ordinances, and laws whether stated herein or not.

**Section 2.** This Resolution shall take effect immediately upon adoption.

Council Member _____ offered the foregoing resolution. Council Member_____ seconded the motion, and upon being put to a vote, the vote was as follows:

| | Aye | Nay | Absent |
|---|---|---|---|
| BEV SMITH, MAYOR | □ | □ | □ |
| PATTI WALLER, VICE MAYOR | □ | □ | □ |
| GARY M. READY, MAYOR PRO TEM | □ | □ | □ |
| DOUG GUNTHER, COUNCIL MEMBER | □ | □ | □ |
| JONI BRINKMAN, COUNCIL MEMBER | □ | □ | □ |

The Mayor thereupon declared the Resolution duly passed and adopted this _____ day of _____2021.

VILLAGE OF PALM SPRINGS, FLORIDA

BY:_____
BEV SMITH, MAYOR

ATTEST:

BY:_____
KIMBERLY M. WYNN, VILLAGE CLERK

REVIEWED FOR FORM AND LEGAL SUFFICIENCY

BY:_____
GLENN J. TORCIVIA, VILLAGE ATTORNEY

PLANNING, ZONING & BUILDING STAFF REPORT

SUBJECT: Small-Scale Land Use Amendment, Rezoning and Site Development Plan (Residential Planned Development Site Plan with Waivers) - Fontana Townhomes – 4063 Davis Road & 4090 Coconut Road.

| Application Summary | | | |
|---|---|---|---|
| Applicant / Petitioner | Meritage Homes of Florida, Inc. | Submittal Date | 10/20/2020 |
| Reference Name | Fontana Townhomes | Case Number | SPR21-02 |
| | | Parcel Control No | 70-42-44-24-00-000-6070 & 70-43-44-30-01-009-0040 |
| Location | Assembly of the properties 4063 Davis Rd & 4090 Coconut Road | Site Area | ±4.73 gross acres<br>±4.48 net acres |
| P&Z B Meeting | March 9, 2021 | Local Planning Agency | April 8, 2021 |
| Council Meeting (after LPA, 1st Reading) | April 8, 2021 | Council Meeting (2nd Reading) | May 13, 2021 |

| Requests | |
|---|---|
| Proposed Use(s) | Small-Scale Land Use Amendment of the Future Land Use Map to change the land use from Urban Infill to High Density Residential, concurrent with Rezoning from Urban Infill (UI) to Residential Multiple- Family and a Planned Development Site Plan for construction of 59 two-story townhomes within nine buildings. |
| Number of Buildings | 9 Buildings (approximately 50,000 SF total) |
| Waivers | 1. Requesting a waiver from Sec.34-1328 to allow a 20' drive aisle instead of 26' required.<br>2. Requesting a waiver from Sec.34-1063(a)(1) to allow for one sidewalk on a street or primary driveway interconnected with other pedestrian ways instead of sidewalks on both sides of the main street.<br>3. Requesting a waiver from Sec.34-766(1) to allow the construction of 59 residential dwelling units within 4.73 acres instead of 12.55 acres minimum required within the RM district.<br>4. Requesting a waiver from Sec.34-1064(1)(b) to allow a 15' side setback instead of 20' minimum required. |

| Parking | | | |
|---|---|---|---|
| Code | Required | Provided | Meets Requirement |
| Total Parking | Total of 185 parking needed<br>2.5/ DU + 25% for guest | 185 spaces total<br>59 garages spaces<br>118 driveway spaces (2 per unit)<br>8 guest spaces | Yes |

| Setbacks | | | |
|---|---|---|---|
| Code | Required Minimum | Proposed | Meets Requirement |
| Front yard (East & West) | 25' | 25' | Yes |
| Rear yard (South) | 20' | N/A (two frontage) | - |
| Side yard (North & South) | 20' | 15' | No* (waiver requested) |

| Site Characteristics | | | |
|---|---|---|---|
| Existing Use | Vacant lot & Single-Family Home | Proposed Use | Residential Multiple-family |
| Existing Zoning | Urban Infill (UI) | Proposed Zoning | Residential Multiple-Family (RM) |
| Existing Future Land Use | Urban Infill | Proposed Future Land Use | High Density Residential |

| | |
|---|---|
| Proposed Density | 12.5 du/acres<br>(Maximum permitted on High Density Residential is 19 du/acre) |

| Surrounding Existing Land Use, Future Land Use, and Zoning | | | |
|---|---|---|---|
| Direction | Existing Use | Future Land Use | Zoning District |
| North | Mobile home park & medical office building | Urban Infill & Commercial | Urban Infill (UI) & Commercial General (CG) |
| South | Single Family Home & Vacant lot | Unknown Unincorporated Palm Beach County | Unknown Unincorporated Palm Beach County |
| East | Drive in theater – Swap Shop | Commercial | Commercial General (CG) |
| West | PBC Governmental office | Unknown Unincorporated Palm Beach County | Unknown Unincorporated Palm Beach County |

| Recommendation |
|---|
| Planning, Zoning & Building Staff recommends conditional approval of the new residential high density planned development site plan, as depicted on the proposed site plan, based on consistency with the Village Comprehensive Plan, compatibility with surrounding uses and generally consistent with the CRA Lake Worth Road District objectives. |



I. Site History

- Ordinance 2017-35: Annexation

The property located at 4090 Coconut Road, was voluntarily annexed into the Village of Palm Springs on December 21, 2017. Palm Beach County's Future Land Use and Zoning designations were maintained until today's date.

- Resolution 2017-49: Annexation

The property located at 4063 Davis Road, was annexed into the Village of Palm Springs via interlocal agreement with Palm Beach County, the agreement was executed by Palm Beach County on October 22, 2019, Village's Council approved the annexation on December 21, 2017. Palm Beach County's Future Land Use and Zoning designations were maintained until today's date.

II. Comprehensive Plan Consistency

- The subject property's Future Land Use designation and Zoning are Palm Beach County Urban Infill and Urban Infill (UI), respectively. The proposed small-scale land use amendment is to assign the Village's Future Land Use of High Density Residential. Concurrently, rezoning from the Palm Beach County zoning designation of Urban Infill to Residential Multiple-Family is requested, and is supported with a planned development site plan. All requests are consistent with goals, objectives and policies of the Village's Comprehensive Plan.

III. Waivers Requested

The applicant is seeking the following waivers:

Waiver #1: The applicant is requesting a waiver relief from Sec.34-1328 to allow a 20' wide drive aisle instead of 26' wide required.

Waiver #2: The applicant is requesting a waiver relief from Sec.34-1063(a)(1) to allow for one sidewalk on a street or primary driveway interconnected with other pedestrian ways instead of sidewalks on both sides of the main street.

Waiver #3: The applicant is requesting a waiver relief from Sec.34-766(1) to allow the construction of 59 residential dwelling units within 4.73 acres instead of 12.55 acres minimum required within the RM district.

Waiver #4: The applicant is requesting a waiver relief from Sec.34-1064(1)(b) to allow a 15' side setback instead of 20' minimum required.

The applicant's full justification to the waivers is attached hereto.

a. <u>The request is in harmony with and is consistent with the purpose and intent of the Village's Comprehensive Plan and Land Development Code and that such waiver will not be injurious to the area involved or otherwise detrimental to the public health, safety, and welfare.</u>

Waiver 1: The request to allow a 20' wide drive aisle when adjacent to 90-degree parking is in harmony and is consistent with the purpose and intent of the Village's Comprehensive Plan and Land Development Code. The majority of the subject site is compliant with the required drive aisle dimensions, however there are even 90-degree parking spaces in a portion of the site which require a 26' wide drive aisle. This waiver will not be injurious to the area involved, as traffic can still safely maneuver into and out of the parking spaces.

Waiver 2: The request to allow a sidewalk along one side of the street where a sidewalk is required along both sides will not be injurious to the area involved or otherwise detrimental to the public health, safety, and welfare. As previously stated, this waiver will allow for greater flexibility in site design and adequate pedestrian connectivity will be provided.

Waiver 3: The request to allow a reduced lot size from the required minimum lot requirements is outside of the Applicant's control and will not affect the public health safety, and welfare.

Waiver 4: The request to allow a reduced side setback is consistent with the purpose and intent of the Village's Comprehensive Plan and Land Development Code, and will not be injurious to the area involved or otherwise detrimental to the public health, safety, and welfare. The subject area of this request is specific to lot 52, which is along the northern portion of the site. It is screened by the adjacent northern property by a 10' landscape buffer and existing 6' concrete wall. The request also applies to lots 14 and 15, along the southern portion of the site, adjacent to the LWDD L-12 Canal. These lots are screened by a 10' landscape buffer with a 5' vinyl fence.

b. The request results from innovative design in which other minimum standards are exceeded.

Waiver 1: The request to allow a reduced drive aisle width when adjacent to 90-degree parking results from innovative design in which other minimum standards are exceeded. The subject site is compliant with the required drive aisle width in all other areas.

Waiver 2: The request to allow a sidewalk along one side of the street where a sidewalk is required along both sides will not be injurious to the area involved or otherwise detrimental to the public health, safety, and welfare. As previously stated, this waiver will allow for greater flexibility in site design and adequate pedestrian continuity will be provided.

Waiver 3: The request to allow a reduced lot size is not the result of innovative design. The lot is predisposed to be smaller than the required minimum and is outside of the control of the applicant.

Waiver 4: The request to allow a reduced side setback distance results from innovative design in which other minimum standards are exceeded. The areas of focus for the reduced side setback, currently propose landscaping above code requirements and provide an existing 6' concrete wall and 5' vinyl fence.

c. The request demonstrates that granting of the waiver will result in preservation of valuable natural resources, including drainage and recharge areas, natural areas, etc.

Waiver 1: The granting of the waiver request related to reduced drive aisle width will result in the preservation of valuable natural resources. A narrower street width equates to less impervious area, as a result this will help preserve valuable natural resources.

Waiver 2: The granting of the waiver request will result in the preservation of valuable natural resources, including drainage and recharge areas, and natural areas. As aforementioned, by negating the requirement for an extra sidewalk, this will allow for increased pervious areas throughout the subject site.

Waiver 3: The request to allow a reduced lot size will not result in preservation of valuable natural resources. The lot is predisposed to be smaller than the required minimum and is outside of the control of the applicant.

Waiver 4: The reduced side setback will result in the preservation of valuable natural resources. This will be achieved, as the reduced setback will allow for greater design freedom and allow for more opportunity to preserve natural resources.

d. The request demonstrates public benefits to be derived, including but not limited to such benefits as dedication of rights-of-way, extensions of pedestrian linkages outside of the project boundaries, preservation of open areas and use of desirable architectural, building, and site design techniques.

Waiver 1: The request will demonstrate public benefits such as desirable site design techniques. By allowing for a narrower drive aisle adjacent to parking spaces, there is room for more pervious area and potential open spaces. This will create a more desirable community for future residents.

Waiver 2: The request will demonstrate public benefits such as extension of pedestrian linkages outside of the project boundaries. The subject site is located in an ideal area with close proximity (less than 300 feet) to the Lake Worth Road Corridor The proposed sidewalk network will connect to the existing Davis Road sidewalk and allow walkability to the surrounding areas and services.

Waiver 3: The request to allow a reduced lot size does not demonstrate public benefits to be derived. The lot is predisposed to be smaller than the required minimum and is outside of the control of the applicant.

Waiver 4: The waiver request will demonstrate public benefits such as desirable site design techniques and right-of-way dedication to the LWDD L-12 Canal. By allowing for a reduced side setback, the subject site will have more design freedoms to provide increased open space and additional drainage.

e. The request provides sufficient screening and buffering to screen adjacent uses from adverse impacts caused by the granting of a waiver.

Waiver 1: The request will not jeopardize the screening of the subject site as it relates to a decreased drive aisle width in a specific portion of the site.

Waiver 2: This waiver request is specific to the pedestrian sidewalks within the subject site and would not adversely impact adjacent properties. However, appropriate landscape buffering and screening is provided.

Waiver 3: The waiver does not generate any adverse impacts related to adjacent properties; however, the applicant will sufficiently screen and buffer the property.

Waiver 4: The waiver request will provide sufficient screening and buffering to screen adjacent uses from any adverse impacts created by the reduced side setback This reduced setback is specific to two areas of the subject site, which propose landscaping above code requirements and provide an existing 6' concrete wall and 5' vinyl fence.

f. Economic issues may not be used to justify waivers.

Waiver 1, 2, 3 & 4: Economic issues are not used as a justification for these requests.

g. The request is compatible with existing and potential land uses adjacent to the development site.

Waiver 1, 2, 3 &4: The request is consistent with the existing and potential land uses adjacent to the development site. A majority of the surrounding uses are residential communities which either provide one sidewalk or no sidewalks. There is a sidewalk along Davis Road which the subject site's sidewalk system will connect to. Overall, a waiver request for a decreased street width, single sidewalk, and a reduced side setback will not generate compatibility issues.

*Staff supports the applicant's request based on the intent of the applicant to maximize the utilization of the land reducing the amount of impervious surface and consistency with the Village Comprehensive Plan*

*allowing for innovative designs. Although the acreage is below the minimum required for 59 residential dwelling units, the property can still be developed in the proposed manner without any adverse impact to the surrounding properties.*

IV. Neighborhood Compatibility

1) The proposed project is located on the south side of Lake Worth Road between Coconut Road and Davis Road.
2) Surrounding properties are a mix of residential and commercial uses.
3) The property is located within the Lake Worth Road District CRA.
4) The Village Center is located within 1.5 miles.
5) A mix of different uses like general retails, restaurants, grocery supermarket and professional offices are located on the proximities along Lake Worth Road.
6) Available public transportation on Lake Worth Road and South Military Trail are existing within less than 1 mile from the property.

V. Consistency with Palm Springs Lake Worth Road District CRA

1. Detailed Description of the Proposal's Consistency with Five (5) Key Goals of CRA

I. Improving Utilities and Infrastructure

The development proposal will extend new Utilities and install new site-serving Infrastructure to the site, as improvements are necessary in order to construct the Townhouses.

II. Expanding Job Development and Economic Growth

The development proposal does not directly fulfill the CRA's key goal to expand job development and economic growth, but it will provide additional residents to supply the workforce and economy of the Village.

III. Enhancing Public Safety

The development proposal will enhance public safety, as the subject site is currently abandoned and an ideal area for vagrancy, illegal dumping and other criminal activities to occur due to its location adjacent to the LWDD canal and separation from Lake Worth Road. The development of buffers, fencing, and additional landscape screening around the perimeter of the subject site will significantly decrease the chance of any crime occurring on this property in the future.

IV. Increasing and Maintaining Workforce Housing

While Workforce Housing is not a component of this development proposal, the overall nature of the development program will create an equal opportunity for all Village residents to increase homeownership. Townhouses offer an affordable entry level homeownership opportunity. More ideal than renting and more achievable than purchasing a single-family residential house, the development proposal will provide much needed home options for residents of the Village.

V. Advancing the Partnership with Palm Beach County

The development proposal will advance the partnership with Palm Beach County due to its location within the Hernden Park Countywide Community Revitalization Area (CCRT) neighborhood core area. The Countywide Community Revitalization Area's within Palm Beach County are overseen by the County's Office of Community Revitalization (OCR). This request will require the continued coordination with the County and surrounding Hernden Park residents to ensure the communities needs are met.

2. Proposal's effect on existing conditions (identified in CRA Community Redevelopment Plan) in the CRA District.

As evidenced by the Lake Worth Road subdistrict study, the Lake Worth Road subdistrict is currently subject to slum/and or blighted conditions. Some of the existing conditions include faulty lot layout in relation to usefulness, inadequate building density patterns, and incidence of crime in the area higher than in the remainder of the county or municipality. This proposal will improve all of the aforementioned negative existing conditions on the subject site and in turn have an effect on the immediately surrounding area.

3. Proposal's ability to assist in achieving strategies and objectives of the Palm Springs CRA.

The development proposal will assist in achieving strategies and objectives of the CRA as it addresses an existing blighted area within the Village. As evidenced by the subdistrict study, the Lake Worth Road subdistrict is subject to slum/and or blighted conditions. The subject site has sat abandoned for many years and allows for an incidence of crime in the area due to its ideal location next to the LWDD canal and separation from Lake Worth Road. Proposing a residential development such as the Fontana Townhomes development will assist in achieving the CRA's strategies to address blighted areas, by improving the area and discouraging criminal traffic.

## VI. Regulatory Issues

- The site plan generally conforms to the property development standards of the Residential Planned Development.
  1) Proposed project plan generally meets required site development regulations.
  2) A High-Density Residential Land Use designation and rezoning to RM, shall be approved prior to consideration of the proposed Site Plan.
  3) The applicant is responsible to acquire all applicable permits from all regulatory agencies with jurisdiction over the project site, including but not limited to Palm Beach County, LWDD and the Village of Palm Springs.
  4) Civil/Utility plans shall be approved by the Village's Engineer.
  5) Proposed ROW dedications along the west, south and east shall be approved by PBC and LWDD respectively at time of Civil/Utility plan review.
  6) The project is located within the Airport Land Use Noise Zone (ALUNZ) for Palm Beach County Park Airport.
  7) The proposed development is located within the Airport Regulated area Zone 3 & Zone 1 for PBIA and Lantana Airport
  8) The 10' pipe easement (ORB. 2204PB. 1150) shall be abandoned at time of Civil/Utility review.
  9) Proposed Site Plan meets the Traffic Performance Standards of Palm Beach County.
  10) Property shall be platted.

## VII. Environmental Issues:

There are no environmental (wetlands, floodplains, etc.) issues identified.

## VIII. Community Outreach/ Notification

- The subject property was posted on February 26, 2021.
- Public Notification letters were mailed to all property owners within 300 feet radius of subject property on February 19, 2021.
- Legal advertisement was published in the paper on February 25, 2021 and will be re-advertise on March 25, 2021 and April 28, 2021.
- Staff has not received any inquiries or comments as a result of the notices.

## IX. Proposed Development Plan Details

The petitioner's development plans dated received on October 20, 2020 depicts the following:

- Application for Small-Scale Land Use Amendment, Rezoning and Residential Planned Development Site Plan approval with 4 waivers for the construction of 59 two-story fee-simply townhomes within 9 buildings.
  1. Site Plan dated received October 20, 2020 revised and resubmitted on February 24, 2021.
  2. Landscape plans dated received October 20, 2020 revised and resubmitted on February 24,

2021.
3. Engineering plans dated received October 20, 2020 revised and resubmitted on January 15, 2021.
4. Architectural plans dated received October 20, 2020 revised and resubmitted on December 21, 2020.
5. Photometric plan dated received October 20, 2020 revised and resubmitted on December 21, 2020.
6. Boundary and topographic survey dated received October 20, 2020.
7. Traffic study.
8. Project narrative and Justification Statement of proposed use.
9. Drainage calculations dated received October 20, 2020 revised and resubmitted on December 21, 2020.
10. Common amenities detail plan.

X Recommendation

The applicant is proposing the development of the 4.73 acres parcel with the construction of 59 two-story fee-simple townhomes. The townhomes will be three-bedroom homes with a one car garage and a driveway with space for two cars. The buildings will be configured with five (5) 6-townhome units, three (3) 7-townhome units and one (1) 8-townhome units, for a total of nine (9) buildings. The community will have two access driveways via the existing Davis Road and Coconut Road right-of-way. Amenities include a tot lot with playground equipment, a shade structure, picnic table and sports field for lawn games.

Planning, Zoning & Building Staff has conducted a review of the application and found the proposed Residential Planned Development Site Plan to be consistent with goal, objectives and policies of the Village's Comprehensive Plan. The proposed project is generally consistent with the Land Development and zoning regulations and all other portions of the code. The proposed residential multi-family project provides internal sidewalk connections between the common amenities (tot lot with playground equipment, a shade structure, picnic table and sports field for lawn games) and the buildings, to facilitate pedestrian circulation and safety. The proposed project provides open spaces creating common areas for passive/leisure activities. The proposed use does not significantly reduce light and air on adjacent properties and would not be a deterrent to surrounding properties. The new project does not negatively impact natural systems.

A respectively 15' and 10' wide right-of-way, along Coconut Road and Davis Road, is required to be dedicated to Palm Beach County to comply with county standards.

In addition, the project exceeds some of the minimum requirement for a Planned Development as shown on the table below:

| Land Development Regulations | Required | Proposed |
|---|---|---|
| 35 percent of the gross land area for open space | 68,302 sf (1.57 acres) | 81,457 sf (1.87 acres) |
| 40% maximum lot coverage | 82,415 sf | 50,000 sf |

Planning, Zoning & Building Staff recommends approval of the Small-Scale Land Use Amendment and Rezoning. PZ&B Staff recommends conditional approval of the Residential Planned Development Site Plan with 4 waivers, for the construction of 59 two-story fee simple townhomes subject to the following forty-eight (48) conditions below and a suggestion for a voluntary monetary contribution, requested by the School District to mitigate school impacts:

1. Build out date December 31, 2025.
2. Notice of Actual Construction or Alteration form shall be filled out (form 7460) to determine if the project will be a hazard to air navigation, according to PBIA, and a final determination letter shall be provided to the Village at time of permitting.

3. Per Palm Beach Department of Airports request, each perspective tenant and/or purchaser within the ALUNZ must be informed that occasionally will observe aircraft arriving at and departing from Palm Beach County Park Airport, and shall be disclosed prior to a real estate contract. The condition will become inclusive in the contract's conditions and shall be noted in subsequent contracts. Condition shall be added into the HOA covenants/ deed restrictions document and provided to the Village at time of Platting.
4. The final plat shall be approved by the Village Council prior to issuance of a building permit.
5. The Final Plat shall be approved and recorded prior to any sales.
6. The common amenities (tot lot with playground equipment, a shade structure, picnic table and sports field for lawn games) shall be completed in their entirety, open for use and accessible to the residents, prior to the issuance of the 23rd Certificate of Occupancy (40% of the project)
7. The dedication of 10' and 15' along Davis Road and Coconut Road respectively via Right-of-way Deed to Palm Beach County free and clear of all encumbrances (to comply with county standards) shall be executed at time of platting.
8. An opaque fence shall be provided around the lift station supplemented with landscaping and details shall be provided at time of permitting.
9. A Utility/Civil Plan shall be approved by the Village Engineer and Palm Beach County Water Utility Department at time of permitting and shall be revised to match site plan.
10. Garages shall be used for parking only. The HOA covenants/ deed restrictions shall include prohibit the conversion of garages into habitable spaces or used as storage.
11. The HOA covenants/ deed restrictions shall prohibit the installation of any additional impervious or semi-impervious surface.
12. The HOA shall be responsible for all landscape maintenance, including, but not limited to, mowing of private yards and trimming the trees adjacent to L-12 Canal. Canopy trees adjacent to L-12 Canal shall not impede, under any circumstances, the access to the canal for maintenance. The HOA shall be responsible for the removal of the trash after the any lawn work concluded. (this shall be included in the HOA documents).
13. The HOA covenants/deed restrictions shall prohibit the installation of sheds, the parking of boats, commercial vehicles, or recreational vehicles anywhere inside the property. Parking of oversized vehicles that do not fit within the typical parking stall (9'x18.5') shall also be prohibited.
14. Any/all legal instrument recorded shall include deed restrictions on the lots as follows:
    a. Garages shall remain as garages and shall not be converted to habitable space.
    b. Only two vehicles shall be parked in the driveways overnight and shall not be permitted to park on or block any sidewalk or drive isles.
    c. There shall be no screen enclosures or additions permitted including screening the rear patios.
    d. There shall be no pools permitted.
    e. Boats, RV'S, or recreational vehicles shall only be permitted if parked in the garage.
    f. No additional impervious or semi-impervious surface.
15. Each perspective tenant and/or purchaser shall be advised of noise issued due to the Swap Shop.
16. The construction dumpster shall be only provided by Waste Pro USA who is under franchise Agreement with the Village.
17. Conditions of approval stated in Village Engineer's letter (Engenuity Group, Inc.) issued on January 11, 2021 shall be satisfied at time of Civil/Utility application review.
18. No parking shall be allowed, under any circumstances, along the drive isle. Residents and guest parking shall only occur within designated parking stalls, private driveways and private garages.
19. The 10' pipe easement shall be abandoned at time of platting.
20. At time of permitting, provide value of construction and number of construction jobs created to be included in CRA annual report.
21. A future signalized intersection at Davis Road and Lake Worth Road will facilitate access via the Davis Road project entrance – this entrance should be enhanced as the main ingress/egress for the project.
22. Any existing or proposed utility box/cabinet shall be screened from view, Staff recommends wrapping the cabinets/box with a match design accordingly with the existing/proposed location.

23. Any existing or proposed utility easement shall not overlap more than 5' the landscape buffer.
24. Proposed 6' Vinyl fence along Davis Road and Coconut Road ROW is not a preferrable material by the Village, Staff recommends providing more durable/resistant material to prevent unwanted pedestrian traffic.
25. The property owner shall post a notice of annual boundary school assignments for students from this development. The district will provide an 11' x 17' sign to be posted in a clear and visible location in all sales offices and models with the following:

"NOTICE TO HOMEBUYERS/TENANTS"

"school age children may not be assigned to the public school closest to their residences. School Board policies regarding overcrowding or other boundary policy decisions affect school boundaries. Please contact the Palm Beach School District Boundary Office at (561)434-8100 for the most current school assignment(s)".

26. Photometric plans shall be approved by the Planning, Zoning and Building Department at time of permitting.
27. Landscaped areas shall be irrigated including but not limited to buffer, islands, planter boxes, etc.
28. The mail pickup and delivery system shall be approved by the United States Postal Service.
29. Irrigation plans shall be provided at the time of permitting. Non-potable water shall be used for the irrigation system per Village code.
30. Provide permits from all applicable permitting agencies, including but not limited to, Lake Worth Drainage District, PBC and Village of Palm Springs at the time of permitting.
31. The property owner shall register an Agent of Record, prior to issuance of a permit, to establish a contact person responsible for compliance with this Development Order, including site plan/landscape plan details and conditions of approval.
32. A copy of the NPDES Notice of Intent for Generic Permit shall be submitted to the PZB Department at time of permitting.
33. A stabilized surface shall be provided at all time during construction for access by emergency vehicles.
34. All mechanical equipment's and above-ground infrastructure shall be screened from view.
35. The Applicant may be required to undertake additional security measures, based on the number of complaints or calls for service for incidents at the premises, as determined by the Police Chief. Such additional security measures, as approved by the Police Chief, may include increased on-site security at the operator's sole expense.
36. Verify utility and easement locations to ensure that there are no conflicts with landscaping, revise at time of permitting as needed.
37. All electric utilities shall be underground.
38. A pre-construction meeting shall be scheduled with the Village Planning, Zoning & Building Development Department prior to commencement of any construction activity. Permits are required from the Planning, Zoning & Building Department prior to commencing any construction or renovation. The project shall be constructed in accordance with the FBC edition in effect at the time of permitting.
39. A silt barrier shall be installed around the perimeter of the property (within the affected area for the site improvements and new building construction) prior to commencement of any site work or construction activity, and a track pad shall be installed at the construction entrance(s), both of which shall remain through substantial completion.
40. Any sidewalk broken or damaged during construction shall be replaced by the contractor prior to CO.
41. The Landscaping shall be certified by the Landscape Architect upon completion and prior to Certificate of Occupancy/Certificate of Completion of each improvement area.
42. Absolutely no occupancy, other than construction personnel, is permitted prior to TCO/CO.
43. Photometrics must be certified by an engineer prior to CO.
44. The civil engineer of record shall certify the site construction prior to Certificate of Occupancy.
45. The applicant may be required to provide a resident inspector for structural elements such as concrete pours in accordance with Section 109.1.3 FBC 2010 and F.S. 553.791. Determination shall be made at time of pre-construction conference with Planning Zoning and Building Director.
46. The General Contractor shall be on site during any and all construction activity in accordance with FS 489.1195.
47. The project shall receive approval from all Authorities Having Jurisdiction and submit copies of approvals to the Village of Palm Springs.

48. At the time of CO, the petitioner shall provide the Planning, Zoning and Building Department with electronic copies of as-builts.

49. The School District has requested the Applicant offer a voluntary commitment to make a contribution of $24,465.00 to the School District of Palm Beach County prior to issuance of a building permit, based on School Capacity Availability Determination letter issued on January 7, 2021.

**JUSTIFICATION STATEMENT**
**FLU Map Amendment | Rezoning | Site Plan (Planned Development)**
**Fontana Townhomes**
*Initial Submittal: October 7, 2020*
*Resubmittal: November 23, 2020; December 21, 2020; January 15, 2021*

## REQUEST

On behalf of Meritage Homes of South Florida, the Applicant, WGI is requesting approval of the following:

1) **Future Land Use Map Amendment** from unincorporated Palm Beach County Urban Infill (UI) Future Land Use designation to the Village of Palm Springs High Density Residential Future Land Use.
2) **Rezoning** from unincorporated Palm Beach County UI zoning district to the Village of Palm Springs Residential Multifamily (RM) zoning district as a residential planned development.
3) **Site Plan (Planned Development)** to allow a 59 unit fee-simple townhouse residential planned development.
   - **Waivers** from the following development standards allowed as part of Planned Development Performance Standards:
     i. Drive aisle width adjacent to 90 degree parking.
     ii. Number of sidewalks along a street.
     iii. Minimum Lot Area
     iv. Side Setback

## SITE CHARACTERISTICS

The 4.73 acre subject site, known as "Fontana Townhomes", is located approximately 0.1 miles south of the Davis Road and Lake Worth Road intersection on the west side of Davis Road. It is comprised of two parcels identified by Parcel Control Numbers (PCNs) 70-43-44-30-01-009-0030 and 70-43-44-30-01-009-0040. Both subject parcels retain an unincorporated Future Land Use (FLU) Designation of Urban Infill (UI) and are within the unincorporated UI Zoning district. While the parcels retain unincorporated FLU designations and zoning districts, they were recently annexed into the Village of Palm Springs and are thus under the jurisdiction of the Village of Palm Springs (herein referred to as "the Village"). The subject site is within the Palm Spring's Community Redevelopment Agency (CRA) district boundary and can be further categorized under the Village's Lake Worth Road CRA Subdistrict. The larger of the two parcels is a former recreational facility and is mostly vacant with numerous residual dilapidated facilities/structures remaining. The smaller of the two parcels is presently occupied by a single-family residential dwelling. A map has been provided below which identifies the subject sites location within the Village, as well as an adjacent parcels view which provides greater detail regarding the site characteristics and surrounding areas.

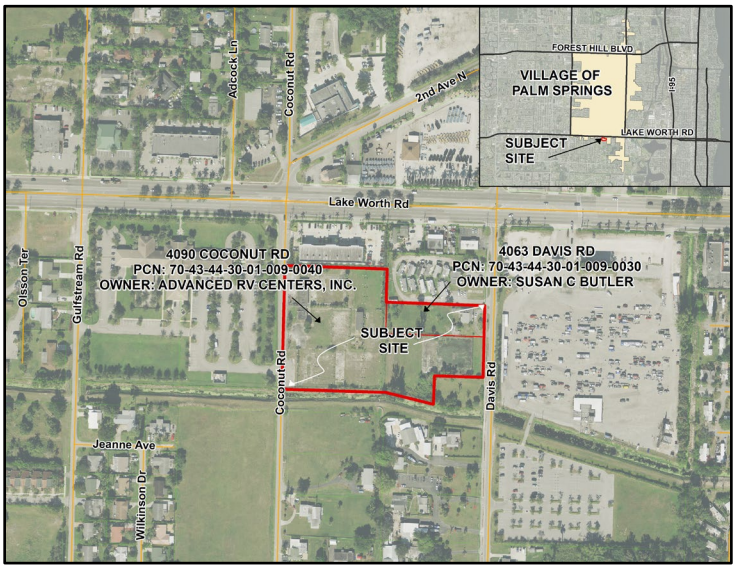

**SURROUNDING PROPERTIES**

The site is surrounded by a mix of uses, including a medical office, multifamily residential, single-family residential, and a flea-market/drive-in movie theater. The mix of surrounding uses adjacent to the subject site can generally be found to be consistent with the proposed development. A summary of the surrounding property information has been provided below.

| | FLU Designation | Zoning District | Existing Use |
|---|---|---|---|
| **North** | CG<br>(Village of Palm Springs) | CG<br>(Village of Palm Springs) | Medical Office |
| | UI<br>(Unincorporated) | UI<br>(Unincorporated) | Mobile Home Park |
| **South** | MR-5<br>(Unincorporated) | RM<br>(Unincorporated) | Vacant/Single-family Residential |
| **East** | CG<br>(Village of Palm Springs) | CG<br>(Village of Palm Springs) | Drive-in Movie Theater/Flea Market |
| **West** | MR-5<br>(Unincorporated) | PO<br>(Unincorporated) | Government Center |

**DEVELOPMENT HISTORY**

As previously mentioned, the subject site was recently annexed into the Village of Palm Springs. The annexation of the subject parcels was adopted in December 2017 and October 2019.

The largest of the two subject site parcels, is approximately four acres and was formerly a recreational facility. Palm Beach County (PBC) Petition Number 73-106, approved by Resolution No. 1973-429 by the PBC Board of County Commissioners (BCC) on August 7th, 1973 approved a Special Exception to allow a Tennis Recreation Facility. It is unclear how long the facility known as the *Lake Worth Racquet Club* was in operations and existed on the parcel, but aerial imagery and ownership information reflects that tennis facility site was no longer in operation by September 2000 as it was purchased by a Place of Worship entity, *Haitian Evangelical Crusade Association, Inc.* Subsequently, based on imagery, after the ownership change, many of the recreational facilities, such as tennis courts and a pool, were partially demolished but still remain on the site today in very poor condition.

According to PBC Planning & Zoning records, there were few inquiries to redevelop the tennis facility, but no formal requests were submitted.

The smaller of the two subject site parcels, is approximately 0.75 acres and presently accommodates a single family dwelling unit. No development history is associated with the single-family parcel other than the building information on file with the County, which indicates the home was built in 1946.

(This space is intentionally left blank.)

**DISTRICT BOUNDARY CHANGES FUTURE LAND USE MAP AMENDMENT/REZONING**

Pursuant to the review requirements provided in Section 34-602.-Land Development Board, the development proposal is consistent with said requirements as outlined below.

***1. A statement of the petitioner's interest in the property to be rezoned, including a copy of the last recorded warranty deed. The following shall also be included, if applicable:***

***(a) If the interest is a joint and several ownership, a written consent to the rezoning petition by all parties of record.***

***(b) If the interest is a contract purchase, a copy of the purchase contract and written consent of the seller/owner.***

***(c) If an authorized agent is involved, a copy of the agency agreement or written consent of the principal/owner.***

***(d) If a lessee is involved, a copy of the lease agreement and written consent of the owner.***

***(e) If a corporation or other business entity is involved, the name of the officer or person responsible for the application and written proof that the representative has the delegated authority to represent the corporation or other business entity, or in lieu thereof, written proof that he is in fact an officer of the corporation.***

***Response:*** The Applicant has provided a copy of the Agency Agreement/written consent from the applicable property owners. A copy of the latest warranty deed applicable to each property owner has been provided for review.

**2. A certified boundary survey by a surveyor registered in the state, at a scale prescribed by the village, containing the following:**

**(a) An accurate legal description of the property to be rezoned.**

**(b) A computation of the total acreage of the tract to the nearest one-tenth of an acre.**

***Response:*** A certified boundary survey by a surveyor registered in the state, at a scale prescribed by the Village has been provided as part of this land Use/district boundary change request. A legal description and computation of the total acreage of the tract to the nearest one-tenth of an acre have been provided within the survey.

**3. The location of the subject parcel, plotted on an official base map, land development map or other acceptable map of the village.**

***Response:*** As identified on Page One of this Justification Statement, a location map of the subject site within the Village has been provided. Furthermore, a radius map and location maps have been included to further identify the location of the subject site.

**4. A property owner's location drawing, showing all properties within 300 feet of the subject property and their relation to the subject parcel.**

***Response:*** As required by the Village to provide adjacent property owner information for Public Hearing applications/notices a location map showing all properties within 300 feet of the subject property and their relation to the subject site has been provided.

**5. A statement of special reasons or the basis for the rezoning request, including the intended use of the property.**

***Response:*** As aforementioned, the subject parcels were recently annexed into the Village however they were never assigned a Village Land Use Designation or Zoning district. This request to allow a high density residential land use and RM zoning are necessary in order for the subject site to remain consistent with the surrounding area and to initiate any sort of development on the subject parcels.

**6. A confirmation of the provisions of all necessary facilities and systems, and attested to by the applicant or authorized agent, for storm drainage, water supply, sewage treatment, solid waste disposal, public safety protection, recreational and park areas, school sites and any other services, where applicable.**

***Response:*** Due to the subject site being previously developed for an intense recreational facility, and also accommodating a residential dwelling unit, adequate provisions of all necessary facilities and systems will be achievable for the subject site.

As part of the required application, coordination has been initiated with the appropriate facilities and system providers in order to confirm adequate provisions can be provided to the subject site. Copies of all correspondence with providers has been included with this submittal, as well as any statements received.

**7. Payment of a filing fee as established by the village.**

***Response:*** The filing fee associated with the Future Land Use Map Amendment and Rezoning portion of the request required by this section have been provided as part of this submittal.

**CONSISTENCY WITH PALM SPRINGS CRA COMMUNITY REDEVELOPMENT PLAN**

As aforementioned, the subject site is within the Palm Springs CRA, under the Lake Worth Road CRA subdistrict. Per the CRA Community Redevelopment Plan, new development applications must demonstrate consistency with the Plan. A description of the development's proposal consistency with the Community Redevelopment Plan can be found below.

**1. Detailed Description of the Proposal's Consistency with Five (5) Key Goals of CRA**

- **I. Improving Utilities and Infrastructure**

  ***Response:*** The development proposal will improve the Utilities and Infrastructure of the area, as improvements are necessary in order to construct the Townhouses.

- **II. Expanding Job Development and Economic Growth**

  ***Response:*** The development proposal will remain consistent with the CRA's key goal to expand job development and economic growth, as it will provide additional residents to supply the workforce and economy of the Village.

- **III. Enhancing Public Safety**

  ***Response:*** The development proposal will enhance public safety, as the subject site is currently abandoned and an ideal area for crime to occur due to its location adjacent to the LWDD canal and separation from Lake Worth Road. The development of buffers, fencing, and additional landscape screening around the perimeter of the subject site will significantly decrease the chance of any crime occurring on this property in the future.

- **IV. Increasing and Maintaining Workforce Housing**

  ***Response:*** While Workforce Housing is not a component of this development proposal, the overall nature of the development program will create an equal opportunity for all Village residents to increase home-ownership. Townhouses offer an affordable entry level homeownership opportunity. More ideal than renting and more achievable than purchasing a single-family residential house, the development proposal will provide much needed home options for residents of the Village.

- **V. Advancing the Partnership with Palm Beach County**

  ***Response:*** The development proposal will advance the partnership with Palm Beach County due to its location within the Hernden Park Countywide Community Revitalization Area (CCRT) neighborhood core area. The Countywide Community Revitalization Area's within Palm Beach County are overseen by the County's Office of Community Revitalization (OCR). This request will require the continued coordination with the County and surrounding Hernden Park residents to ensure the communities needs are met.

**2. Proposal's effect on existing conditions (identified in CRA Community Redevelopment Plan) in the CRA District.**

***Response:*** As evidenced by the Lake Worth Road subdistrict study, the Lake Worth Road subdistrict is currently subject to slum/and or blighted conditions. Some of the existing conditions include faulty lot layout in relation to usefulness, inadequate building density patterns, and incidence of crime in the area higher than in the remainder of the county or municipality. This proposal will improve all of the aforementioned negative existing conditions on the subject site and in turn have an effect on the immediately surrounding area.

**3. Proposal's ability to assist in achieving strategies and objectives of the Palm Springs CRA.**

***Response:*** The development proposal will assist in achieving strategies and objectives of the CRA as it addresses an existing blighted area within the Village. As evidenced by the subdistrict study, the Lake Worth Road subdistrict is subject to slum/and or blighted conditions. The subject site has sat abandoned for many years and allows for an incidence of crime in the area due to its ideal location next to the LWDD canal and separation from Lake Worth Road. Proposing a residential development such as the Fontana Townhomes development will assist in achieving the CRA's strategies to address blighted areas, by improving the area and discouraging criminal traffic.

## DEVELOPMENT PROGRAM

The following outlines the development program for the proposed 59 unit multi-family residential townhouse development:

*Density*
The maximum density for the RM zoning district is 19 DU/AC. The proposed development remains consistent with the district's density regulations as a density of 12.5 DU/AC is proposed.

*Building Height*
Pursuant to Section 34-1064, the maximum height for a building within the residential planned development district shall be the same as allowed in the applicable land development district, or 35 feet, whichever is higher. The proposed RM zoning district and residential planned development height regulation remain consistent with one another, as three stories or 35 feet. The subject site is in compliance with this requirement as the proposed buildings are no more than 35 feet in height.

*Minimum Acreage Requirement*
The Village's code requirements state that all Residential Planned Developments shall be no less than three acres. The subject site is compliant with this requirement as it is 4.73 acres in size.

*Open Space and Common Amenity Area*
Pursuant to Section 34-1064(d) of the Village Code, a residential planned development is required to provide a minimum amount of open space and common amenity area. The minimum total open space requirement for residential planned developments shall be 35 percent of the gross land area, of which 20 percent shall be common amenity area. Based on the standard for required open space, the 4.73 acre subject site is required to provide 1.65 acres of open space. The subject site currently exceeds the code requirement for open space as 2.09 acres or 44 percent of the gross land are proposed to remain as open space. Of the 1.65 acre open space requirement, at least 20 percent of this area must be provided as a common amenity area to all lots such as parks, playgrounds, or other recreational purposes. Based on the open space land area requirement of 1.65 acres the subject site is required to provide 0.31 acres of common amenity area for the proposed community. This requirement is adequately satisfied, as 0.31 acres of common amenity area is proposed central to the community.

*Lot Coverage*
Pursuant to Sec. 34-1064(e)(2), all structures within a Residential Planned Developments shall have a maximum lot coverage of 40%, based on the net area of individual lots. The development proposal is compliant with this requirement as none of the proposed lots exceed 40% lot coverage.

*Access*
The subject site retains double frontage along Coconut Road and Davis Road. Two ingress/egress access points are proposed, one access point from Davis Road and another access point from Coconut Road. The two access points allow for increased circulation and flow of vehicular and pedestrian traffic throughout the subject site.

*Buffering*
Pursuant to Village Code *Article III*, *Section 34-162.-Required Landscaping,* in certain situations the Village requires landscaping around the perimeter of development parcels in order to create a buffer from adjoining land uses, streets and properties. The subject site is in compliance with this section of the Village's code as there is a 10 foot landscape buffer provided around the entirety of the subject site. This proposed perimeter buffer in conjunction with the adjacent properties' buffers will provide screening and will reduce the risk of any potential adverse impacts from the adjacent mobile home park and medical office developments to the north.

*Waivers*
As provided in Subdivision IX.-Planned Developments, the proposed residential planned development is subject to greater flexibility in design and development standards relative to specific dimensional regulations, in order to encourage ingenuity and originality in subdivision and site design while preserving open space to serve recreational, scenic and other public services. Therefore, this Subdivision of the Village's code allows for waivers from certain criteria. The waivers requested for the subject site, relate to the required sidewalk requirements, street width, and side setback requirements. The waiver details of these aforementioned requirements can be found within the subject site's *Conformance with Planned Development Code* section of this Justification Statement.

## CONFORMANCE WITH PLANNED DEVELOPMENT CODE

As required by the Village's Development Application, demonstration must be provided that the proposed residential planned development is in conformance with the Planned Development Code Objectives and Performance Standards provided in Subdivision IX of the Village's Code. An outline of how the project conforms with standards has been provided below.

### *SEC. 41-1062 OBJECTIVES*

1. ***To permit the creation of functional and unique residential, commercial and mixed-use developments that do not adversely impact the village's character and "small town feel".***

   ***Response:*** The proposed residential planned development is in conformance with this objective as the requested residential density of 12.5 dwelling units per acre (DU/AC) is not out of character for the surrounding area. The site is located in close proximity to many commercial services which will provide immediate service to future residents and create a functional balance between non-residential and residential uses. Furthermore, it is compatible with the surrounding residential land use designations to the north, east, south, and west. Therefore, by allowing for the approval of the proposed 59 dwelling unit townhouse development, the Village's "Small Town Feel" will not be adversely impacted.

2. ***To promote building siting that takes into consideration the context of the development, the location of nearby uses, and the new development's compatibility with existing neighborhoods.***

   ***Response:*** The site planning of the subject site took great consideration into the context of the development with the surrounding areas. The subject site's required dry detention areas and recreation area provide a great deal of open space and substantially less intensity, so they have been located adjacent to the southernmost property line which abuts residential on the opposite side of the LWDD L-12 Canal. This siting coupled with the canal along the southern property line provides for the utmost separation possible between the proposed townhouse development and neighboring single family residential.

3. ***To enhance landscaped open space and streetscapes.***

***Response:*** The development proposal is consistent with the aforementioned objective as areas of the subject site will exceed landscaping requirements for open space and streetscapes.

4. ***To bring unique and creative solutions to new development, the following elements should be considered in the context of the specific site, project and/or use:***

   ***a) Arrangement and spacing of buildings and open spaces;***
   ***b) Ability to aggregate adjacent lots or parcels, and/or eliminate nonconformities;***
   ***c) Location of access drive and sidewalks to promote circulation and access;***
   ***d) Building coverage;***
   ***e) Sufficient and convenient parking for uses and activities;***
   ***f) Landscape buffers and screening mechanisms to enhance aesthetics and promote compatibility***
   ***g) Adequate lighting for security and pedestrian/vehicular safety; and***
   ***h) Development of large employment centers predominately of light industrial or high technology uses in underutilized corridors. The flexibility of design should promote revitalization of the primary commercial areas and an economic stimulus through job creation to the local economy as well.***

***Response:*** The development proposal brings unique and creative solutions to new development, by remaining consistent with the aforementioned subobjectives. As previously mentioned, great consideration was given during the site planning of the subject site. The arrangement and spacing of buildings relative to open spaces was considered heavily to remain consistent with requirements such as the common amenity area requirements and to provide a better quality of living for future residents. Furthermore, the development proposal provides for a unique solution to develop a currently underutilized parcel by aggregating an adjacent single-family parcel rather than creating an enclave. As previously stated, the access drives have been located in a way to promote circulation and access of the unique double-frontage site. Each subobjective was weighed heavily as they relate to the specific subject site.

***SEC. 34-1063 PERFORMANCE STANDARDS***

The development proposal conforms with the performance standards for a Planned Development as outlined below.

***Standards:***

1. ***Sidewalks on both sides of a street or primary driveway, interconnected with other pedestrian-ways and/or providing access to each building.***

***Response:*** The development proposal is proposing sidewalks along one side of the street to provide for a greater sense of open space and to utilize the subject site's potential to the greatest extent possible. The Planned Development code requires that sidewalks be required on both sides of the streets. While sidewalks are not provided on both sides of the streets, adequate pedestrian circulation and access throughout the subject site is still achieved through the use of a five foot wide sidewalk and crosswalks throughout. The proposal of one sidewalk rather than two is subject to a waiver.

2. ***Consolidation of smaller parcels into a larger, unified development project.***

***Response:*** As aforementioned, consolidation of smaller parcels into a large, unified development project was incorporated into the planned development proposal. If the request were solely to develop the former tennis facility parcel, this would

result in an enclave of single-family residential. Therefore, the adjacent single-family lot is proposed to be consolidated with the larger parcel in order to provide a unified development and avoid any adverse impacts to the community.

3. ***Consolidation of driveways to eliminate curb cuts, with reciprocal easements for access; provision of access from secondary streets and alleys.***

   ***Response:*** The consolidation of driveways has been provided as evidenced within the provided site plan. Access from secondary streets and alleys is not appropriate for the subject site as Townhouse units are proposed, and the size of the subject site does not allow for the use of alleys and secondary streets.

4. ***Shared parking arrangements to reduce impervious surfaces and promote efficient* use *of facilities.***

   ***Response:*** As required by the Village's Parking Code, the subject site provides guest parking accommodations throughout the subject site. These guest parking locations were intentionally planned to be central to the entire development to promote efficient use by lots. Furthermore, this consideration allows for reduced impervious area as guest parking is not over abundant and throughout all areas of the subject site.

5. ***Provision of sufficient parking to avoid on-street parking, unless designed with on-street spaces.***

   ***Response:*** The subject site retains sufficient parking for the residential units per the Village's Code requirement of 2.5 spaces per unit. Parking spaces are provided for guest parking spaces as required by Village Code; the total parking provided is distributed throughout the development.

6. ***Pedestrian-scale street lighting along sidewalks and pedestrian ways.***

   ***Response:*** Street lighting will be provided along sidewalks and pedestrian-ways to create an appropriate pedestrian scale environment.

7. ***Aggregation of open space to create common areas of sufficient size for passive/leisure activities.***

   ***Response:*** The required 0.31 community amenity area is proposed to remain as one whole area located central to the development. By aggregating the amenity area into one tract rather than multiple smaller tracts throughout the subject site, the land will sufficiently be used for active and passive/leisure activities.

8. ***Continuity of sidewalks and pathways where disconnects occur; and provision of sidewalks to usable open spaces, recreation amenities or public facilities.***

   ***Response:*** As previously mentioned, crosswalks will be provided throughout the subject site to provide continuity of sidewalks and pathways where disconnects occur. The subject site has an extensive pedestrian circulation pattern which allows uninterrupted circulation from usable open spaces, recreation amenities, public facilities, and individual lots.

9. ***Residential setbacks that allow for a green, semi-private planting area between the sidewalk and house(s).***

   ***Response:*** The provided setbacks are proposed to allow for a green, semi-private planting area between the sidewalk and houses. Appropriate foundation planting has been planned to be incorporated into the individual lots.

10. ***Promote streetscape where feasible, with maintenance agreements assigning responsibility to adjacent properties.***

    ***Response:*** Streetscape is promoted throughout the subject site where feasible. This will be achieved through the use of pedestrian scale lighting, as previously mentioned, and by proposing appropriate landscaping to provide adequate streetscape.

11. ***Create bus waiting areas for safety, for school buses or mass transit, as may be applicable.***

    ***Response:*** As coordinated with Palm Beach County School Board, a 10'x15' school bus shelter has been provided along Davis Road.

12. ***Building stepbacks or setbacks to respect existing scale and massing of adjacent neighborhoods and promote compatibility.***

    ***Response:*** As aforementioned, the site was planned to provide the greatest amount of separation as possible from the least intense adjacent uses to the south. Much of the structures are massed closer to the northern boundary as the adjacent uses and structures are more compatible with the proposed townhouse structures.

13. ***Provision of original, self-confident building design, and prohibition of metal buildings.***

    ***Response:*** Metal buildings are not proposed as part of this development proposal. Original, self-confident building design is provided as the townhouse buildings are proposed to be contemporary modern.

14. ***Buffers between differing uses to include a masonry wall and landscaping to promote compatibility.***

    ***Response:*** As depicted in the site photos provided with this submittal, a masonry wall currently exists along the adjacent commercial property line to the north of the subject site. This wall is proposed to remain as is to provide further screening from the medical office use and to promote compatibility. As previously mentioned, a perimeter landscape buffer is proposed in conjunction with the neighboring medical office's landscape buffer to provide the utmost screening as possible.

15. ***Adequate vehicular circulation, traffic maintenance and/or operational measures that does not negatively impact existing roadway conditions, including avoidance of dead-end streets and t-style turnarounds.***

    ***Response:*** As aforementioned, the subject site is proposed to provide adequate vehicular circulation that does not negatively impact existing roadway conditions, including avoidance of dead-end streets and t-style turn arounds. Rather than providing access along one road, access along both frontages of the double frontage subject site is provided to negate the increased need for dead-end streets and t-style turn arounds that is commonly found in development patterns today.

## ***WAIVERS***

Pursuant to the Planned Development Performance standards of the Village's Code, the Applicant may utilize waivers to promote the use of innovative and creative techniques and concepts. As previously mentioned, waivers are requested for the development proposal to allow relief from certain requirements. The waivers requested have been outlined within the table below and meet the waiver criteria as identified within this *Waivers* section.

| Waiver | Subject | Code Section | Required | Proposed | Deviation |
|---|---|---|---|---|---|
| 1. | Street width adjacent to 90 degree parking | Sec. 34-1328 | 26’ wide drive aisle when adjacent to parking | 20’ wide drive aisle when adjacent to parking | -6’ |
| 2. | Sidewalk | Sec. 34-1063(a)(1) | Sidewalk along both sides of Street | Sidewalk along one side of street | Single-sided sidewalk |
| 3. | Side Setback | Sec. 34-1064(e)(1)(b) | 20’ | 15’ | -5’ |
| 4. | Min. Lot Area | Sec. 34-766(1) | 547,000 SF / 12.55 AC. | 205,881 SF / 4.73 AC. | -341,119 SF / -7.83 AC. |

1. ***The request is in harmony with and is consistent with the purpose and intent of the Village's Comprehensive Plan and* Land *Development Code and that such waiver will not be injurious to the area involved or otherwise detrimental to the public health, safety, and welfare.***

***Waiver 1 Response:*** The request to allow a 20’ wide drive aisle when adjacent to 90 degree parking is in harmony and is consistent with the purpose and intent of the Village’s Comprehensive Plan and Land Development Code. The majority of the subject site is compliant with the required drive aisle dimensions, however there are seven 90 degree parking spaces in a portion of the site which require a 26’ wide drive aisle. This waiver will not be injurious to the area involved, as traffic can still safely maneuver into and out of the parking spaces.

***Waiver 2 Response:*** The request to allow a sidewalk along one side of the street where a sidewalk is required along both sides will not be injurious to the area involved or otherwise detrimental to the public health, safety, and welfare. As previously stated, this waiver will allow for greater flexibility in site design and adequate pedestrian connectivity will be provided.

***Waiver 3 Response:*** The request to allow a reduced side setback is consistent with the purpose and intent of the Village’s Comprehensive Plan and Land Development Code, and will not be injurious to the area involved or otherwise detrimental to the public health, safety, and welfare. The subject area of this request is specific to lot 52, which is along the northern portion of the site. It is screened by the adjacent northern property by a 10’ landscape buffer and existing 6’ concrete wall. The request also applies to lots 14 and 15, along the southern portion of the site, adjacent to the LWDD L-12 Canal. These lots are screened by a 10’ landscape buffer with a 5’ vinyl fence.

***Waiver 4 Response:*** The request to allow a reduced lot size from the required minimum lot requirements is outside of the Applicant’s control and will not affect the public health safety, and welfare.

***2. The request results from innovative design in which other minimum standards are exceeded.***

***Waiver 1 Response:*** The request to allow a reduced drive aisle width when adjacent to 90 degree parking results from innovative design in which other minimum standards are exceeded. The subject site is compliant with the required drive aisle width in all other areas.

***Waiver 2 Response:*** The request to allow a sidewalk along one side of the street where a sidewalk is required along both sides will not be injurious to the area involved or otherwise detrimental to the public health, safety, and welfare. As previously stated, this waiver will allow for greater flexibility in site design and adequate pedestrian continuity will be provided.

***Waiver 3 Response:*** The request to allow a reduced side setback distance results from innovative design in which other minimum standards are exceeded. The areas of focus for the reduced side setback, currently propose landscaping above code requirements and provide an existing 6' concrete wall and 5' vinyl fence.

***Waiver 4 Response:*** The request to allow a reduced lot size is not the result of innovative design. The lot is predisposed to be smaller than the required minimum and is outside of the control of the applicant.

***3. The request demonstrates that granting of the waiver will result in preservation of valuable natural resources, including drainage and recharge areas, natural areas, etc.***

***Waiver 1 Response:*** The granting of the waiver request related to reduced drive aisle width will result in the preservation of valuable natural resources. A narrower street width equates to less impervious area, as a result this will help preserve valuable natural resources.

***Waiver 2 Response:*** The granting of the waiver request will result in the preservation of valuable natural resources, including drainage and recharge areas, and natural areas. As aforementioned, by negating the requirement for an extra sidewalk, this will allow for increased pervious areas throughout the subject site.

***Waiver 3 Response:*** The reduced side setback will result in the preservation of valuable natural resources. This will be achieved, as the reduced setback will allow for greater design freedom and allow for more opportunity to preserve natural resources.

***Waiver 4 Response:*** The request to allow a reduced lot size will not result in preservation of valuable natural resources. The lot is predisposed to be smaller than the required minimum and is outside of the control of the applicant.

***4. The request demonstrates public benefits to be derived, including but not limited to such benefits as dedication of rights-of-way, extensions of pedestrian linkages outside of the project boundaries, preservation of open areas and* use *of desirable architectural, building, and site design techniques.***

***Waiver 1 Response:*** The request will demonstrate public benefits such as desirable site design techniques. By allowing for a narrower drive aisle adjacent to parking spaces, there is room for more pervious area and potential open spaces. This will create a more desirable community for future residents.

***Waiver 2 Response:*** The request will demonstrate public benefits such as extension of pedestrian linkages outside of the project boundaries. The subject site is located in an ideal area with close proximity (less than 300 feet) to the Lake Worth Road Corridor. The proposed sidewalk network will connect to the existing Davis Road sidewalk and allow walkability to the surrounding areas and services.

***Waiver 3 Response:*** The waiver request will demonstrate public benefits such as desirable site design techniques and right-of-way dedication to the LWDD L-12 Canal. By allowing for a reduced side setback, the subject site will have more design freedoms to provide increased open space and additional drainage.

***Waiver 4 Response:*** The request to allow a reduced lot size does not demonstrate public benefits to be derived. The lot is predisposed to be smaller than the required minimum and is outside of the control of the applicant.

***5. The request provides sufficient screening and buffering to screen adjacent* uses *from adverse impacts caused by the granting of a waiver.***

***Waiver 1 Response:*** The request will not jeopardize the screening of the subject site as it relates to a decreased drive aisle width in a specific portion of the site.

***Waiver 2 Response:*** This waiver request is specific to the pedestrian sidewalks within the subject site and would not adversely impact adjacent properties. However, appropriate landscape buffering and screening is provided.

***Waiver 3 Response:*** The waiver request will provide sufficient screening and buffering to screen adjacent uses from any adverse impacts created by the reduced side setback. This reduced setback is specific to two areas of the subject site, which propose landscaping above code requirements and provide an existing 6' concrete wall and 5' vinyl fence.

***Waiver 4 Response:*** The waiver does not generate any adverse impacts related to adjacent properties, however, the Applicant will sufficiently screen and buffer the property.

***6. Economic issues may not be* used *to justify waivers.***

***Waiver Response:*** Economic issues are not used as a justification for these requests.

***7. The request is compatible with existing and potential* land uses *adjacent to the development site.***

***Response:*** The request is consistent with the existing and potential land uses adjacent to the development site. A majority of the surrounding uses are residential communities which either provide one sidewalk or no sidewalks. There is a sidewalk along Davis Road which the subject site's sidewalk system will connect to. Overall, a waiver request for a decreased street width, single sidewalk, reduced side setback, and minimum lot area will not generate compatibility issues.

***8. Waiver requests from minimum common amenity area requirements shall further demonstrate that adequate recreation area is available in the immediate vicinity of the proposed development.***

***Response:*** This criterion is not applicable as a waiver is not requested from the common amenity area requirements. The development proposal provides adequate community amenity area.

9. ***Waiver requests from maximum height limitations shall further demonstrate that the additional height will not adversely impact adjacent properties and appropriate setbacks are provided as building height increases.***

***Response:*** This criterion is not applicable as a waiver is not requested from the height limitation requirements. The development proposal is currently under the maximum height threshold of three stories or 35 feet.

**CONCLUSION**

***Based on the above justification and attached information, the petitioner respectfully requests approval of the Future Land Use Map Amendment, Rezoning, and Site Plan to allow a Residential Planned Development application for the subject site.***

LAKE WORTH RD

USE: MEDICAL CENTER
FLU: N/A
ZONING: CG

LIFT STATION

8'x6' PATIO (TYP.)

10' BUFFER

S88° 03' 57"E 317.32'

O.S.T.

EX. 6' CONC. WALL

15' (SEE WAIVER CHART)

8' VINYL FENCE

10' BUFFER

6' VINYL FENCE (TYP.)

USE: RESIDENTIAL
FLU: N/A
ZONING: UI

BUILDING 9 (7 UNITS)

BUILDING 8 (8 UNITS)

BUILDING 7 (6 UNITS)

BUILDING 6 (6 UNITS)

BUILDING 5 (6 UNITS)

BUILDING 4 (6 UNITS)

BUILDING 3 (6 UNITS)

BUILDING 2 (7 UNITS)

BUILDING 1 (7 UNITS)

15' ROW DEDICATION

15' ROW
DB. 352, PG. 165

COVERED ENTRY, TYP.
1 CAR GARAGE, TYP.

6' VINYL FENCE

30' R.O.W.

10' U.E.

5' S/W

32' ROW

N88° 03' 57"W 211.33

2' VALLEY GUTTER, TYP.

4' SEPARATION

ENTRANCE SIGN

10' SIGN S.B.

USE: SERVICE CENTER
FLU: MR-5
ZONING: PO

COCONUT RD

N01° 27' 04"E 393.30'

DAVIS RD

S01° 26' 48"W 230.91'

MAIL KIOSK

15' D.E.

18' TYP.

S88° 02' 58"E 408.29

MAIN ENTRANCE

40'

10' ROW DEDICATION

ENTRANCE SIGN

11' SIGN S.B.

EX. O.H.E.

10'x15' BUS SHELTER

USE: OUTDOOR MARKET
FLU: N/A
ZONING: CG

0.32 AC.
DRY DETENTION

DRY DETENTION
0.04 AC.

S01° 26' 48"W 107.39'

S01° 26' 48"W 95.87'

S01° 26' 48"W 167.26'

S01° 26' 48"W 107.25'

S01° 26' 48"W 86.70'

N88° 01' 48"W 141.84'

0.31 AC.
REC AREA

BENCHES & TRASH RECEPTACLE

SHADE STRUCTURE W/ PICNIC TABLE & TRASH RECEPTACLE

SPRING RIDERS

6' VINYL FENCE (TYP.)

5' PATH

10' PIPE EASEMENT (T.B.A.)
ORB. 2204 PB. 1150

15' (SEE WAIVER CHART)

S01° 26' 48"W 86.70'

15' (SEE WAIVER CHART)

10' BUFFER

5' LWDD DEDICATION

5' VINYL FENCE

N75° 55' 18"W 23.86'

N88° 01' 05"W 14.32'

4 SEAT SWING SET

N75° 55' 18"W 125.36'

ENGINEERED WOOD FIBER SURFACE

2 SEAT SEESAW

SPORTS FIELD/
LAWN GAMES AREA

ADDITIONAL RIGHT OF WAY
ORB. 2806 PG. 1202

LWDD L-12 CANAL
ROAD PLAT BOOK 2, PG. 101
CANAL RIGHT OF WAY
ORB. 589, PG. 369

LWDD L-12 CANAL

USE: RESIDENTIAL (SINGLE FAMILY)
FLU: MR-5
ZONING: RM

REQUIRED RIGHT OF WAY
PER: LAKE WORTH DRAINAGE DISTRICT
RIGHT OF WAY MAP
LATERAL CANAL NO. 12
JOB:64-122
SHEET 43, PG. 240

## LOCATION MAP

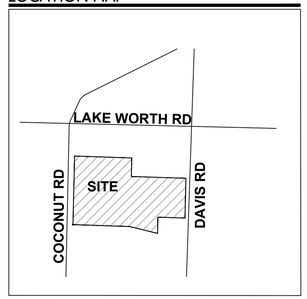


N

0 20 40 80

SCALE: 1" = 40'

## SITE DATA

| | |
|---|---|
| APPLICATION NAME | FONTANA TOWNHOMES |
| EXISTING LAND USE DESIGNATION (PBC) | UI |
| PROPOSED LAND USE DESIGNATION (VILLAGE) | HIGH DENSITY RESIDENTIAL |
| EXISTING ZONING DISTRICT (PBC) | UI |
| PROPOSED ZONING DISTRICT (VILLAGE) | RM/PUD |
| PCN | 70-43-44-30-01-009-0040 |
| | 70-43-44-30-01-009-0030 |
| EXISTING USE | SINGLE FAMILY/VACANT |
| PROPOSED USE | TOWNHOME RESIDENTIAL |
| GROSS SITE AREA | 4.73 AC. |
| NET SITE AREA | 4.48 AC. |
| TOTAL PROPOSED UNITS (TOWNHOME) | 59 D.U. |
| GROSS DENSITY | 12.5 D.U./AC. |
| OPEN SPACE REQUIRED | 1.57 AC.(35%)* |
| OPEN SPACE PROVIDED | 1.87 AC.(41%) |
| PROPOSED PERVIOUS | 2.23 AC.(47.1%) |
| PROPOSED IMPERVIOUS | 2.50 AC.(52.9%) |
| COMMON AMENITY REQUIRED/PROVIDED | 0.31 AC.(20% OF OPEN SPACE) |
| DRY DETENTION AREA | 0.36 AC. |
| TOTAL PARKING REQUIRED | 185 SP. |
| RESIDENTIAL PARKING REQUIRED (2.5 SP./D.U.) | 148 SP. |
| GUEST SPACES REQUIRED (25% OF REQ. SP.) | 37 SP. |
| TOTAL PARKING PROVIDED | 185 SP. |
| GARAGE SPACES | 59 SP. |
| DRIVEWAY SPACES | 118 SP. |
| GUEST SPACES | 8 SP. |
| BUILDING HEIGHT | 30' MAX |
| TRAFFIC ANALYSIS ZONE (TAZ) | 362 |

*CALCULATION BASED ON NET SITE AREA

## PROPERTY DEVELOPMENT REGULATIONS (TOWNHOMES)

| ZONING DISTRICT (RM) | MAX BLDG COVER | MIN. SETBACKS | | | |
|---|---|---|---|---|---|
| | | FRONT | SIDE INT. | CORNER STREET | REAR |
| REQUIRED | 40% | 25' | 20' | 25' | 20' |
| PROPOSED | 24% | 20' | 15*** | N/A | N/A |

NOTE: PROPERTY DEVELOPMENT REGULATIONS TAKEN FROM PERIMETER OF DEVELOPMENT.
** SEE WAIVER CHART

## WAIVER CHART

| WAIVER SUBJECT | CODE SECTION | REQUIRED | PROPOSED | DEVIATION |
|---|---|---|---|---|
| PARKING DRIVE AISLE | 34-1328 | 26' | 20' | -6' |
| SIDEWALK | 34-1063(a)(1) | SIDEWALK ON BOTH SIDES OF STREET | SIDEWALK ON ONE SIDE OF STREET | SINGLE SIDEWALK |
| SIDE SETBACK | 34-1064(e)(1)(b) | 20' | 15' | -5' |
| MIN. LOT AREA | 34-766(1) | 547,000 SF / 12.55 AC. | 205,881 SF / 4.73 AC. | 341,119 SF / 7.83 AC. |

## LEGEND

AC. = ACRES
D.E. = DRAINAGE EASEMENT
DRO = DEVELOPMENT REVIEW OFFICERS
D.U. = DWELLING UNITS
EX. = EXISTING
FLU = FUTURE LAND USE
M = MODEL UNIT
O.H.E. = OVERHANG EASEMENT
O.R.B. = OFFICIAL RECORD BOOK
O.S.T. = OPEN SPACE TRACT
P = POSTAL DELIVERY PARKING
P.B. = PLAT BOOK
PDR = PROPERTY DEVELOPMENT REGULATIONS
PG. = PAGE
R = RADIUS
R.O.W. = RIGHT-OF-WAY
S.B. = SETBACK
S/W = SIDEWALK
S.F. = SQUARE FEET
T.B.A. = TO BE ABANDONED
TYP = TYPICAL
TH = TOWNHOME
U.E. = UTILITY EASEMENT


WGI
2035 Vista Parkway, West Palm Beach, FL 33411
Phone No. 866.909.2220 www.wginc.com
Cert No. 6091 - LB No. 7055


REVISIONS

| NO. | DATE | DESCRIPTION | BY |
|---|---|---|---|
| 1 | 2020-10-07 | INITIAL SUBMITTAL | CB |
| 2 | 2020-11-20 | RESUBMITTAL | CB |
| 3 | 2020-12-21 | RESUBMITTAL | CB |
| 4 | 2020-1-15 | RESUBMITTAL | CB |
| 5 | 2020-2-24 | RESUBMITTAL | CB |

CAD 5407\01-PLANS\5407701-PA-SITEDWG
JOB NO. 5407.01
DRAWN BY R.C.
CHECK BY J.P.
DATE 8/27/2020

# FONTANA TOWNHOMES
# VILLAGE OF PALM SPRINGS
## SITE PLAN

SHEET:
SP-1


Christian Bryant C:\Users\chrisg\AppData\Local\Temp\acpublish_bryant\5407701-PA_SITE.dwg — Printed: 2/24/2021 2:15:41 PM Saved: 2/24/2021 1:41:48 PM

## TYPICAL UNIT DETAILS

SCALE: NTS

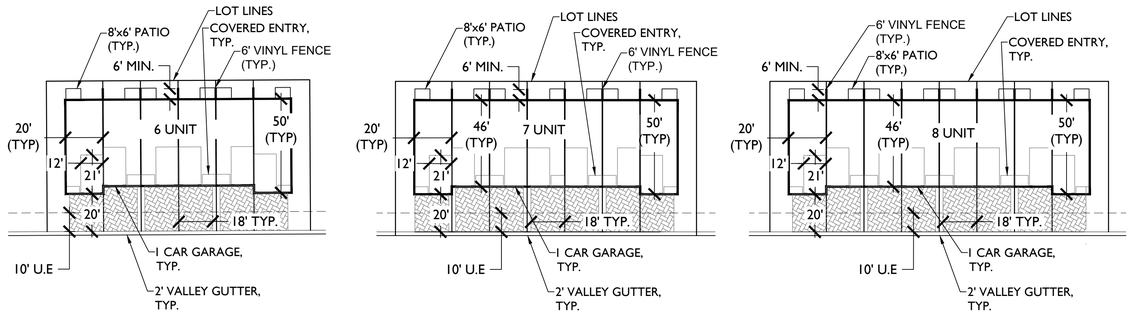


## ENTRANCE SIGN DETAIL

SCALE: NTS

SIGN REQUIREMENTS:

- MAXIMUM 8' SIGN HEIGHT.

- MAXIMUM 150' SQUARE FEET SIGN AREA.




## OPEN SPACE PLAN EXHIBIT

SCALE: NTS




WGI
2035 Vista Parkway, West Palm Beach, FL 33411
Phone No. 866.909.2220 www.wginc.com
Cert No. 6091 - LB No. 7055

REVISIONS

| NO. | DATE | DESCRIPTION | BY |
|---|---|---|---|
| 1 | 2020-10-07 | INITIAL SUBMITTAL | CB |
| 2 | 2020-11-20 | RESUBMITTAL | CB |
| 3 | 2020-12-21 | RESUBMITTAL | CB |
| 4 | 2020-1-15 | RESUBMITTAL | CB |
| 5 | 2020-2-24 | RESUBMITTAL | CB |

| | |
|---|---|
| CAD 5407/01-PL-SITE.DWG | |
| JOB NO. | 5407.01 |
| DRAWN BY | R.C. |
| CHECK BY | J.P. |
| DATE | 8/27/2020 |

**FONTANA TOWNHOMES**
**VILLAGE OF PALM SPRINGS**
REGULATING PLAN

SHEET:
RP-1

Christian Bryant C:\pwworking\wgi\christian.bryant\d0899203\5407.01-PL-SITE.dwg — Plotted: 2/24/2021 2:10:44 PM Saved: 2/24/2021 1:41:48 PM

## REC. AREA DETAIL

SCALE: NTS

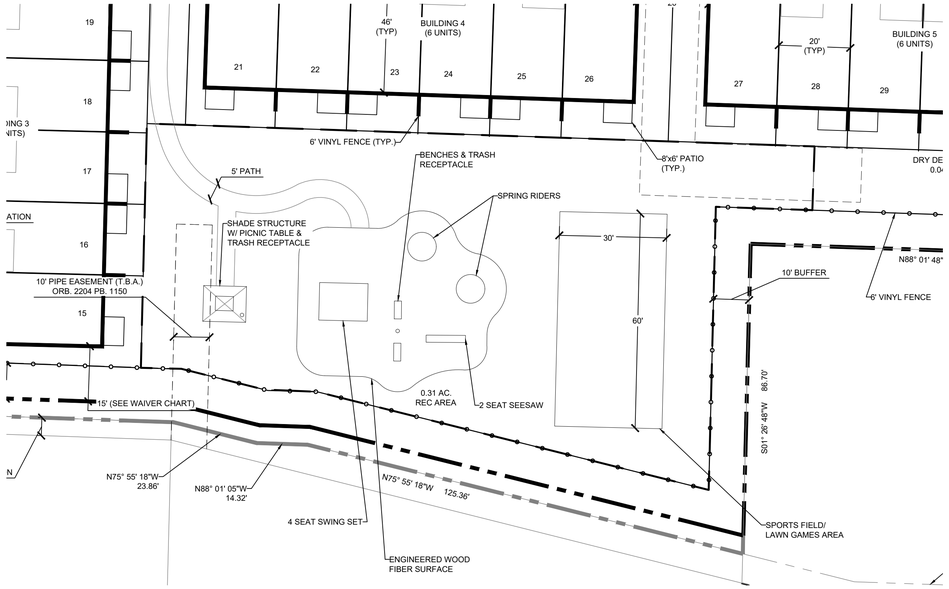


## FENCE EXHIBIT DETAIL

SCALE: NTS

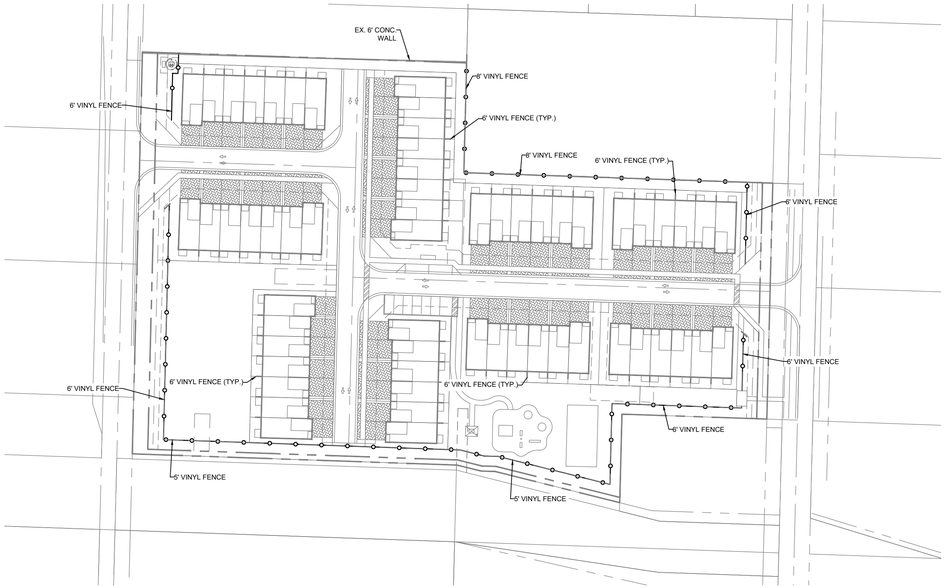


## PERVIOUS / IMPERVIOUS PLAN EXHIBIT

SCALE: NTS





WGI
2035 Vista Parkway, West Palm Beach, FL 33411
Phone No. 866.909.2220 www.wginc.com
Cert No. 6091 - LB No. 7055


REVISIONS

| NO. | DATE | DESCRIPTION | BY |
|---|---|---|---|
| 1 | 2020-10-07 | INITIAL SUBMITTAL | CB |
| 2 | 2020-11-20 | RESUBMITTAL | CB |
| 3 | 2020-12-21 | RESUBMITTAL | CB |
| 4 | 2020-1-15 | RESUBMITTAL | CB |
| 5 | 2020-2-24 | RESUBMITTAL | CB |

| | |
|---|---|
| CAD 5407001-PL-SITE.DWG | |
| JOB NO. | 5407.01 |
| DRAWN BY | R.C. |
| CHECK BY | J.P. |
| DATE | 8/27/2020 |

**FONTANA TOWNHOMES**
**VILLAGE OF PALM SPRINGS**
**REGULATING PLAN**

SHEET:
RP-2


Drawn By:ef C:\wgi\working\jpf\christian bryant\5400\5407001\5407001-PL-SITE.dwg — Plotted: 2/24/2021 2:10:47 PM Saved: 2/24/2021 1:41:48 PM

LOCATION MAP

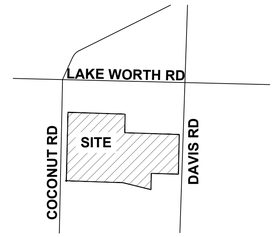


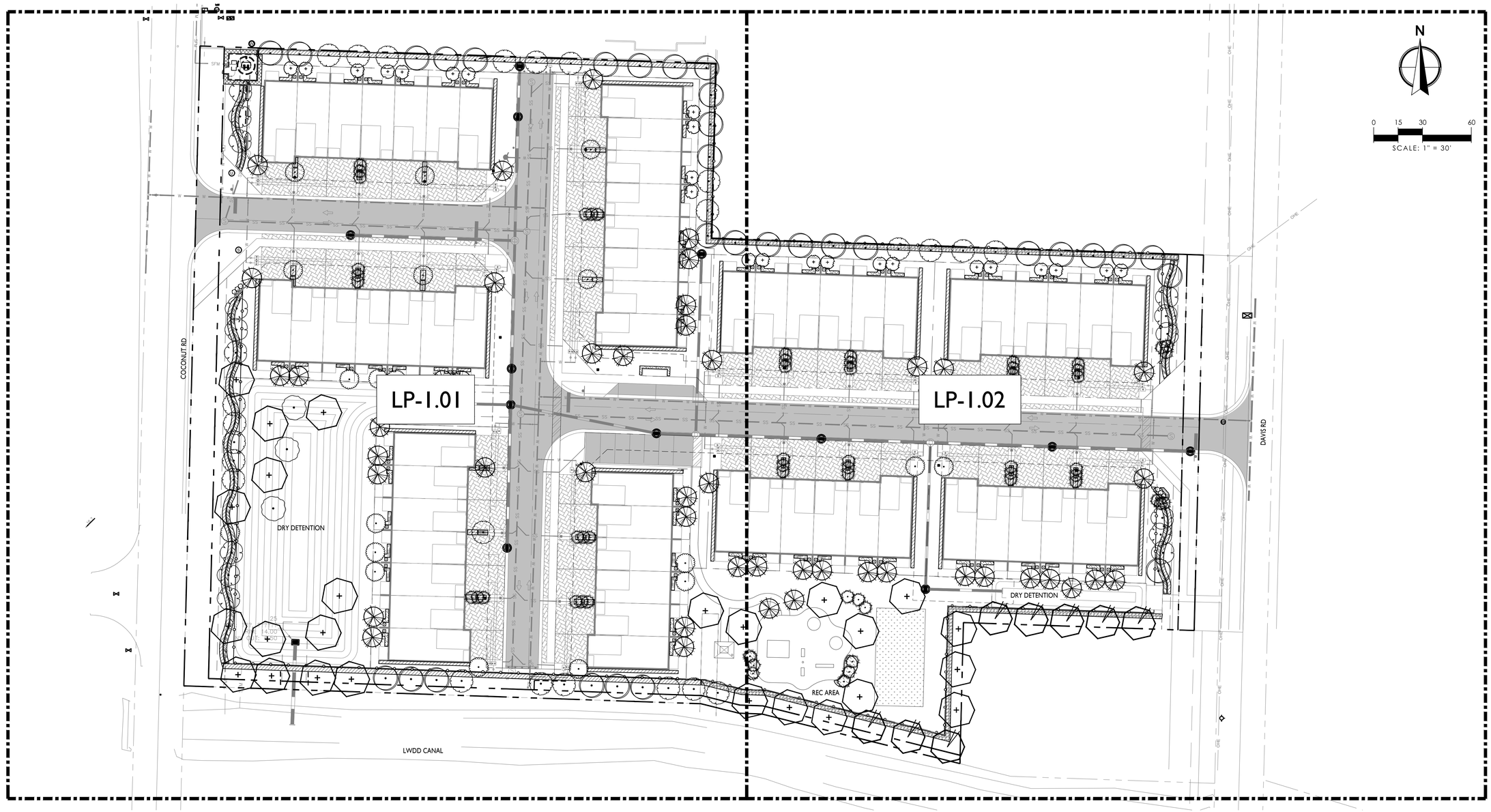


WGI
2035 Vista Parkway, West Palm Beach, FL 33411
Phone No. 866.909.2220 www.wginc.com
Cert No. 6091 - LB No. 7055

| NO | DATE | DESCRIPTION | BY |
|---|---|---|---|
| 1 | 11-20-2020 | RESUBMITTAL | BJ |
| 2 | 12-21-2020 | RESUBMITTAL | BJ |
| 3 | 01-15-2021 | RESUBMITTAL | BJ |
| 4 | 02-24-2021 | RESUBMITTAL | BJ |

REVISIONS

| | |
|---|---|
| CAD 5407001-LP.DWG | |
| JOB NO. | 5407.01 |
| DRAWN BY | BJ/LC/DN |
| CHECK BY | TM |
| DATE | 10/07/2020 |

LANDSCAPE ARCHITECT OF RECORD
TIFFANY DELYNN MAY
FL# LA6667274

DAVIS ROAD PROPERTY
PALM SPRINGS, FL

**OVERALL LANDSCAPE PLAN**

SHEET:
LP-1.00

Bryan Jackman C:\pworkcing\bjackman\d1868616\5407001-LP.dwg, pdf Plotted: 2/24/2021 5:08:02 PM Saved: 2/24/2021 3:24:56 PM

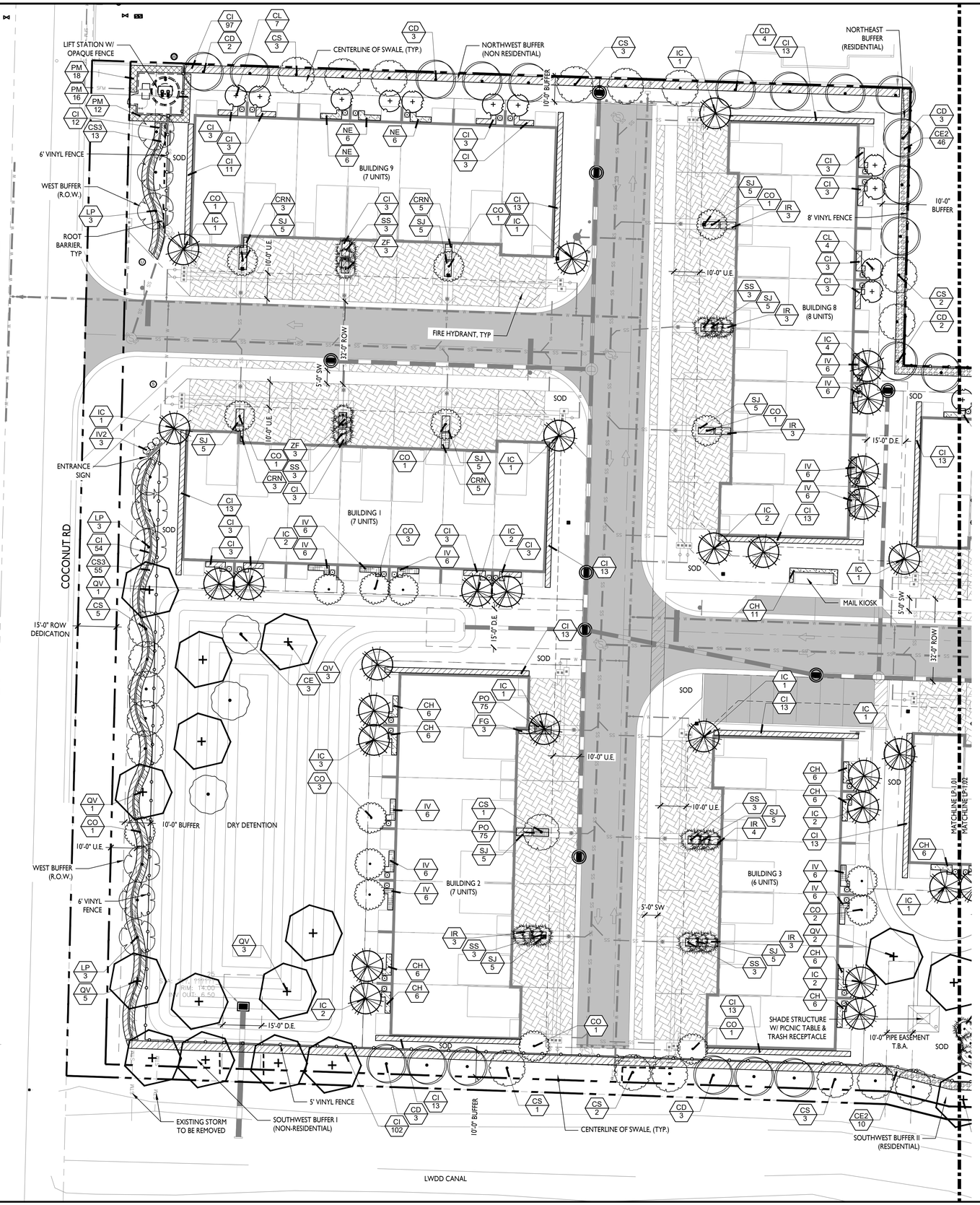


## SHEET KEY MAP

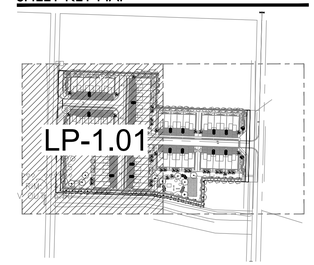


N

0 10 20 40

SCALE: 1" = 20'

## LANDSCAPE REQUIREMENTS

PALM SPRINGS, FLORIDA

| PERIMETER LANDSCAPING | REQUIRED | PROVIDED |
|---|---|---|
| LOCAL/ PRIVATE R.O.W. BUFFER | | |
| CATEGORY 6 STANDARD - 10' BUFFER<br>1 CANOPY TREE PER 20 LINEAR FEET AND A MEANDERING 3' HEDGE WITH 2 TIERS | WEST BUFFER<br>360 LF / 20 = 18 TREES AND A MEANDERING 3' HEDGE WITH 2 TIERS<br><br>EAST BUFFER<br>200 LF / 20 = 10 TREES AND A MEANDERING 3' HEDGE WITH 2 TIERS | WEST BUFFER<br>18 TREES<br>AND A MEANDERING 3' HEDGE WITH 2 TIERS<br><br>EAST BUFFER<br>10 TREES (8 TREES AND 6 PALMS @ 3:1)<br>AND A MEANDERING 3' HEDGE WITH 2 TIERS |
| RESIDENTIAL BUFFER | | |
| CATEGORY 2 STANDARD - 10' BUFFER<br>1 CANOPY TREE PER 20 LINEAR FEET<br>WALL/FENCE AND 4' HEDGE AT TIME OF PLANTING | NORTHEAST BUFFER<br>410 LF / 20 = 21 TREES<br><br>SOUTHWEST BUFFER II<br>160 LF / 20 = 8 TREES | NORTHEAST BUFFER<br>21 TREES AND 4' HEDGE AT TIME OF PLANTING*<br><br>SOUTHWEST BUFFER II<br>8 TREES AND 4' HEDGE AT TIME OF PLANTING*<br><br>*WALL/FENCE IS NOT DEEMED NECESSARY FOR THESE SMALL PORTIONS OF THE SITE |
| NONRESIDENTIAL BUFFER | | |
| NON-VEHICULAR USE AREAS -<br>PERIMETER LANDSCAPING ALONG BOUNDARY<br>1 TREE PER 25 LF | NORTHWEST BUFFER<br>317 LF / 25 = 13 TREES<br><br>SOUTHWEST BUFFER I<br>317 LF / 25 = 13 TREES<br><br>SOUTHEAST BUFFER<br>225 LF / 25 = 8 TREES | NORTHWEST BUFFER<br>14 TREES<br><br>SOUTHWEST BUFFER I<br>14 TREES<br><br>SOUTHEAST BUFFER<br>8 TREES |
| **INTERIOR LANDSCAPING** | **REQUIRED** | **PROVIDED** |
| FOUNDATION PLANTING | | |
| AT LEAST 1 TREE OR CLUSTER OF 3 PALMS SHALL BE INSTALLED FOR EACH 30 LF OF BUILDING FACADE FACING A STREET | 6 UNIT BUILDING<br>120 LF/ 30 = 4 TREES AT STREET FACADE FOR EACH BUILDING<br><br>7 UNIT BUILDING<br>140 LF/ 30 = 5 TREES AT STREET FACADE FOR EACH BUILDING<br><br>8 UNIT BUILDING<br>160 LF/ 30 = 6 TREES AT STREET FACADE FOR EACH BUILDING | 6 UNIT BUILDING<br>4 TREES FOR EACH BUILDING<br>(2 TREES AND 6 PALMS @ 3:1)<br><br>7 UNIT BUILDING<br>MIN. 5 TREES FOR EACH BUILDING<br>(4 TREES AND 3 PALMS @ 3:1)<br><br>8 UNIT BUILDING<br>6 TREES FOR EACH BUILDING<br>(5 TREES AND 3 PALMS @ 3:1) |
| RESIDENTIAL PARCEL - TREE PLANTING | | |
| 1 TREE PLANTED FOR EVERY 2,500 SF OF A PARCEL USED FOR NON RESIDENTIAL PURPOSES | 6 UNIT BUILDING<br>11,300 SF / 1,500 SF = 8 TREES FOR EACH BUILDING<br><br>7 UNIT BUILDING<br>12,540 SF / 1,500 SF = 9 TREES FOR EACH BUILDING<br><br>8 UNIT BUILDING<br>14,715 SF / 1,500 SF = 10 TREES FOR EACH BUILDING | 6 UNIT BUILDING<br>10 TREES FOR EACH BUILDING<br>(8 TREES AND 6 PALMS @ 3:1)<br><br>7 UNIT BUILDING<br>12 TREES FOR EACH BUILDING<br>(11 TREES AND 3 PALMS @ 3:1)<br><br>8 UNIT BUILDING<br>14 TREES FOR EACH BUILDING<br>(13 TREES AND 3 PALMS @ 3:1) |
| NON-RESIDENTIAL PARCEL - TREE PLANTING | | |
| 1 TREE PLANTED FOR EVERY 2,500 SF OF A PARCEL USED FOR NON RESIDENTIAL PURPOSES | WEST DETENTION AREA<br>19,141 SF / 2,500 SF = 8 TREES<br><br>REC AREA<br>14,175 SF / 2,500 SF = 6 TREES<br><br>EAST DRY DETENTION AREA<br>1,961 SF / 2,500 SF = 1 TREE | WEST DETENTION AREA<br>9 TREES<br><br>REC AREA<br>11 TREES (8 TREES AND 9 PALMS @ 3:1)<br><br>EAST DETENTION AREA<br>1 TREE |

## PLANT SCHEDULE OVERALL

| TREES | QTY | COMMON NAME | BOTANICAL NAME | NATIVE | REMARKS |
|---|---|---|---|---|---|
| BS | 8 | Gumbo Limbo | Bursera simaruba | YES | 12` HT X 5` SPRD, MIN 2" CAL |
| CL | 23 | Spiny Fiddlewood | Citharexylum spinosum | YES | 12` HT X 5` SPRD, 2" CAL, 5` CT |
| CD | 31 | Pigeon Plum | Coccoloba diversiolia | YES | 12` HT X 5` SPRD, MIN 2" CAL |
| CE | 3 | Green Buttonwood | Conocarpus erectus | YES | 12` HT X 5` SPRD, MIN 2" CAL |
| CS | 24 | Silver Buttonwood | Conocarpus erectus sericeus | YES | 12` HT X 5` SPRD, MIN 2" CAL |
| CO | 19 | Orange Geiger Tree | Cordia sebestena | YES | 12` HT X 5` SPRD, MIN 2" CAL |
| IC | 47 | Dahoon Holly | Ilex cassine | YES | 12` HT X 5` SPRD, MIN 2" CAL |
| LP | 15 | Crape Myrtle | Lagerstroemia indica | NO | 12` HT X 5` SPRD, MIN 2" CAL |
| QV | 25 | Southern Live Oak | Quercus virginiana | YES | 12` HT X 5` SPRD, MIN 2" CAL |
| **PALMS** | **QTY** | **COMMON NAME** | **BOTANICAL NAME** | **NATIVE** | **REMARKS** |
| SS | 57 | Cabbage Palmetto | Sabal palmetto | YES | 12` - 16` OAH, STAGGERED, BOOTED |
| **SHRUBS** | **QTY** | **COMMON NAME** | **BOTANICAL NAME** | **NATIVE** | **REMARKS** |
| IV2 | 6 | Schilling`s Dwarf Holly | Ilex vomitoria `Schilling`s Dwarf` | YES | 36" HT X 36" SPRD, MOUNDS |
| **SHRUB AREAS** | **QTY** | **COMMON NAME** | **BOTANICAL NAME** | **NATIVE** | **REMARKS** |
| CI | 587 | Cocoplum | Chrysobalanus icaco | YES | 36" HT X 36" SPRD X 36" O.C. |
| CH | 143 | Horizontal Cocoplum | Chrysobalanus icaco `Horizontalis` | YES | 18" HT X 18" SPRD @ 24" O.C. |
| CRN | 16 | Dwarf Clusia | Clusia fluminensis | YES | 18" HT X 18" SPRD @ 24" O.C. |
| CE2 | 265 | Green Buttonwood | Conocarpus erectus | NO | 48` HT X 48" SPRD, @ 36" O.C. |
| CS3 | 99 | Silver Buttonwood | Conocarpus erectus `Sericeus` | YES | 48" HT X 36" SPRD @ 36" O.C. |
| FG | 3 | Green Island Ficus | Ficus microcapra `Green Island` | NO | 24" HT X 24" SPRD @ 24" O.C. |
| IV | 103 | Schilling`s Dwarf Holly | Ilex vomitoria `Schilling`s Dwarf` | YES | 24" HT 24" SPRD, @ 24" O.C. |
| IR | 19 | Red Dwarf Ixora | Ixora chinensis `Red Dwarf` | NO | 24" HT X 24" SPRD, @ 30" O.C. |
| NE | 54 | Boston Fern | Nephrolepis exaltata | YES | 18" HT. X 18" SPRD., @ 24" O.C. |
| PM | 46 | Podocarpus | Podocarpus macrophyllus | NO | 4` HT, FULL TO BASE, @ 24" O.C. |
| SJ | 55 | Native Porterweed | Stachytarpheta jamaicensis | YES | 10" HT X 10" SPRD, @ 24" O.C. |
| ZF | 30 | Coontie Palm | Zamia floridana | YES | 24" HT X 24" SPRD, @ 30" O.C. |
| **GROUND COVERS** | **QTY** | **COMMON NAME** | **BOTANICAL NAME** | **NATIVE** | **REMARKS** |
| PO | 150 | Baby Rubber Plant | Florida Peperomia obtusifolia | YES | 8" HT X 6" SPRD @ 6" O.C. |
| DFG | 57 | Dwarf Fakahatchee Grass | Tripsacum floridanum | YES | 18" HT. X 18" SPRD., @ 24" O.C. |

FLORIDA ZOYSIAGRASS - ONLY TO BE USED IN SPORTS FIELD/LAWN GAMES AREA. CONTRACTOR TO VERIFY QUANTITY IN FIELD.

WGI
2035 Vista Parkway, West Palm Beach, FL 33411
Phone No. 866.909.2220 www.wginc.com
Cert No. 6091 - LB No. 7055

| NO | DATE | DESCRIPTION | BY |
|---|---|---|---|
| 1 | 11-20-2020 | RESUBMITTAL | BJ |
| 2 | 12-21-2020 | RESUBMITTAL | BJ |
| 3 | 01-15-2021 | RESUBMITTAL | BJ |
| 4 | 02-24-2021 | RESUBMITTAL | BJ |

REVISIONS

CAD 54070\LP.DWG
JOB NO. 5407.01
DRAWN BY BJ/LC/DN
CHECK BY TM
DATE 10/07/2020

LANDSCAPE ARCHITECT OF RECORD
TIFFANY DELYNN MAY
FL# LA6667274

DAVIS ROAD PROPERTY
PALM SPRINGS, FL

**LANDSCAPE PLAN**

SHEET:
LP-1.01

Bryan Jackman C:\projects\gwg\bryan.jackman\d1f8981615405701-LP.dwg, pdf Plotted: 2/24/2021 5:08:09 PM Saved: 2/24/2021 3:24:56 PM

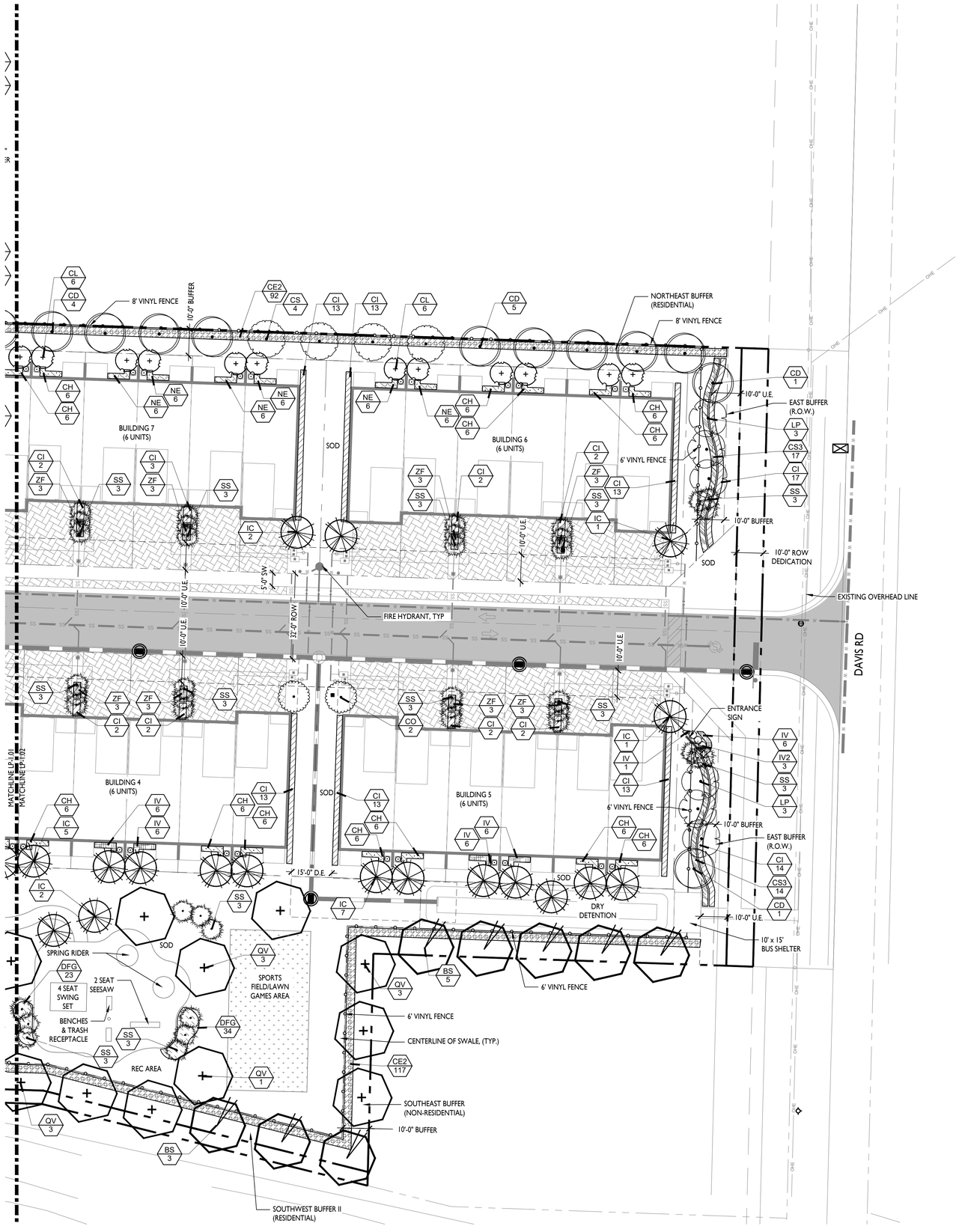


## SHEET KEY MAP

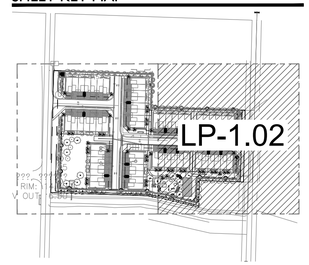


N

0 10 20 40

SCALE: 1" = 20'

## LANDSCAPE REQUIREMENTS

PALM SPRINGS, FLORIDA

| PERIMETER LANDSCAPING | REQUIRED | PROVIDED |
|---|---|---|
| LOCAL/ PRIVATE R.O.W. BUFFER | | |
| CATEGORY 6 STANDARD - 10' BUFFER<br>1 CANOPY TREE PER 20 LINEAR FEET AND A MEANDERING 3' HEDGE WITH 2 TIERS | WEST BUFFER<br>360 LF / 20 = 18 TREES AND A MEANDERING 3' HEDGE WITH 2 TIERS<br><br>EAST BUFFER<br>200 LF / 20 = 10 TREES AND A MEANDERING 3' HEDGE WITH 2 TIERS | WEST BUFFER<br>18 TREES<br>AND A MEANDERING 3' HEDGE WITH 2 TIERS<br><br>EAST BUFFER<br>10 TREES (8 TREES AND 6 PALMS @ 3:1)<br>AND A MEANDERING 3' HEDGE WITH 2 TIERS |
| RESIDENTIAL BUFFER | | |
| CATEGORY 2 STANDARD - 10' BUFFER<br>1 CANOPY TREE PER 20 LINEAR FEET<br>WALL/FENCE AND 4' HEDGE AT TIME OF PLANTING | NORTHEAST BUFFER<br>410 LF / 20 = 21 TREES<br><br>SOUTHWEST BUFFER II<br>160 LF / 20 = 8 TREES | NORTHEAST BUFFER<br>21 TREES AND 4' HEDGE AT TIME OF PLANTING*<br><br>SOUTHWEST BUFFER II<br>8 TREES AND 4' HEDGE AT TIME OF PLANTING*<br><br>*WALL/FENCE IS NOT DEEMED NECESSARY FOR THESE SMALL PORTIONS OF THE SITE |
| NONRESIDENTIAL BUFFER | | |
| NON-VEHICULAR USE AREAS -<br>PERIMETER LANDSCAPING ALONG BOUNDARY<br>1 TREE PER 25 LF | NORTHWEST BUFFER<br>317 LF / 25 = 13 TREES<br><br>SOUTHWEST BUFFER I<br>317 LF / 25 = 13 TREES<br><br>SOUTHEAST BUFFER<br>225 LF / 25 = 8 TREES | NORTHWEST BUFFER<br>14 TREES<br><br>SOUTHWEST BUFFER I<br>14 TREES<br><br>SOUTHEAST BUFFER<br>8 TREES |
| **INTERIOR LANDSCAPING** | **REQUIRED** | **PROVIDED** |
| FOUNDATION PLANTING | | |
| AT LEAST 1 TREE OR CLUSTER OF 3 PALMS SHALL BE INSTALLED FOR EACH 30 LF OF BUILDING FACADE FACING A STREET | 6 UNIT BUILDING<br>120 LF/ 30 = 4 TREES AT STREET FACADE FOR EACH BUILDING<br><br>7 UNIT BUILDING<br>140 LF/ 30 = 5 TREES AT STREET FACADE FOR EACH BUILDING<br><br>8 UNIT BUILDING<br>160 LF/ 30 = 6 TREES AT STREET FACADE FOR EACH BUILDING | 6 UNIT BUILDING<br>4 TREES FOR EACH BUILDING<br>(2 TREES AND 6 PALMS @ 3:1)<br><br>7 UNIT BUILDING<br>MIN. 5 TREES FOR EACH BUILDING<br>(4 TREES AND 3 PALMS @ 3:1)<br><br>8 UNIT BUILDING<br>6 TREES FOR EACH BUILDING<br>(5 TREES AND 3 PALMS @ 3:1) |
| RESIDENTIAL PARCEL - TREE PLANTING | | |
| 1 TREE PLANTED FOR EVERY 2,500 SF OF A PARCEL USED FOR NON RESIDENTIAL PURPOSES | 6 UNIT BUILDING<br>11,300 SF / 1,500 SF = 8 TREES FOR EACH BUILDING<br><br>7 UNIT BUILDING<br>12,540 SF / 1,500 SF = 9 TREES FOR EACH BUILDING<br><br>8 UNIT BUILDING<br>14,715 SF / 1,500 SF = 10 TREES FOR EACH BUILDING | 6 UNIT BUILDING<br>10 TREES FOR EACH BUILDING<br>(8 TREES AND 6 PALMS @ 3:1)<br><br>7 UNIT BUILDING<br>12 TREES FOR EACH BUILDING<br>(11 TREES AND 3 PALMS @ 3:1)<br><br>8 UNIT BUILDING<br>14 TREES FOR EACH BUILDING<br>(13 TREES AND 3 PALMS @ 3:1) |
| NON-RESIDENTIAL PARCEL - TREE PLANTING | | |
| 1 TREE PLANTED FOR EVERY 2,500 SF OF A PARCEL USED FOR NON RESIDENTIAL PURPOSES | WEST DETENTION AREA<br>19,141 SF / 2,500 SF = 8 TREES<br><br>REC AREA<br>14,175 SF / 2,500 SF = 6 TREES<br><br>EAST DRY DETENTION AREA<br>1,961 SF / 2,500 SF = 1 TREE | WEST DETENTION AREA<br>9 TREES<br><br>REC AREA<br>11 TREES (8 TREES AND 9 PALMS @ 3:1)<br><br>EAST DETENTION AREA<br>1 TREE |

## PLANT SCHEDULE OVERALL

| TREES | QTY | COMMON NAME | BOTANICAL NAME | NATIVE | REMARKS |
|---|---|---|---|---|---|
| BS | 8 | Gumbo Limbo | Bursera simaruba | YES | 12` HT X 5` SPRD, MIN 2" CAL |
| CL | 23 | Spiny Fiddlewood | Citharexylum spinosum | YES | 12` HT X 5` SPRD, 2" CAL, 5` CT |
| CD | 31 | Pigeon Plum | Coccoloba diversiolia | YES | 12` HT X 5` SPRD, MIN 2" CAL |
| CE | 3 | Green Buttonwood | Conocarpus erectus | YES | 12` HT X 5` SPRD, MIN 2" CAL |
| CS | 24 | Silver Buttonwood | Conocarpus erectus sericeus | YES | 12` HT X 5` SPRD, MIN 2" CAL |
| CO | 19 | Orange Geiger Tree | Cordia sebestena | YES | 12` HT X 5` SPRD, MIN 2" CAL |
| IC | 47 | Dahoon Holly | Ilex cassine | YES | 12` HT X 5` SPRD, MIN 2" CAL |
| LP | 15 | Crape Myrtle | Lagerstroemia indica | NO | 12` HT X 5` SPRD, MIN 2" CAL |
| QV | 25 | Southern Live Oak | Quercus virginiana | YES | 12` HT X 5` SPRD, MIN 2" CAL |
| **PALMS** | **QTY** | **COMMON NAME** | **BOTANICAL NAME** | **NATIVE** | **REMARKS** |
| SS | 57 | Cabbage Palmetto | Sabal palmetto | YES | 12` - 16` OAH, STAGGERED, BOOTED |
| **SHRUBS** | **QTY** | **COMMON NAME** | **BOTANICAL NAME** | **NATIVE** | **REMARKS** |
| IV2 | 6 | Schilling`s Dwarf Holly | Ilex vomitoria `Schilling`s Dwarf` | YES | 36" HT X 36" SPRD, MOUNDS |
| **SHRUB AREAS** | **QTY** | **COMMON NAME** | **BOTANICAL NAME** | **NATIVE** | **REMARKS** |
| CI | 587 | Cocoplum | Chrysobalanus icaco | YES | 36" HT X 36" SPRD X 36" O.C. |
| CH | 143 | Horizontal Cocoplum | Chrysobalanus icaco `Horizontalis` | YES | 18" HT X 18" SPRD @ 24" O.C. |
| CRN | 16 | Dwarf Clusia | Clusia fluminensis | YES | 18" HT X 18" SPRD @ 24" O.C. |
| CE2 | 265 | Green Buttonwood | Conocarpus erectus | NO | 48` HT X 48" SPRD. @ 36" O.C. |
| CS3 | 99 | Silver Buttonwood | Conocarpus erectus `Sericeus` | YES | 48" HT X 36" SPRD @ 36" O.C. |
| FG | 3 | Green Island Ficus | Ficus microcapra `Green Island` | NO | 24" HT X 24" SPRD @ 24" O.C. |
| IV | 103 | Schilling`s Dwarf Holly | Ilex vomitoria `Schilling`s Dwarf` | YES | 24" HT 24" SPRD, @ 24" O.C. |
| IR | 19 | Red Dwarf Ixora | Ixora chinensis `Red Dwarf` | NO | 24" HT X 24" SPRD, @ 30" O.C. |
| NE | 54 | Boston Fern | Nephrolepis exaltata | YES | 18" HT. X 18" SPRD., @ 24" O.C. |
| PM | 46 | Podocarpus | Podocarpus macrophyllus | NO | 4` HT, FULL TO BASE, @ 24" O.C. |
| SJ | 55 | Native Porterweed | Stachytarpheta jamaicensis | YES | 10" HT X 10" SPRD, @ 24" O.C. |
| ZF | 30 | Coontie Palm | Zamia floridana | YES | 24" HT X 24" SPRD, @ 30" O.C. |
| **GROUND COVERS** | **QTY** | **COMMON NAME** | **BOTANICAL NAME** | **NATIVE** | **REMARKS** |
| PO | 150 | Baby Rubber Plant | Florida Peperomia obtusifolia | YES | 8" HT X 6" SPRD @ 6" O.C. |
| DFG | 57 | Dwarf Fakahatchee Grass | Tripsacum floridanum | YES | 18" HT. X 18" SPRD., @ 24" O.C. |

FLORIDA ZOYSIAGRASS - ONLY TO BE USED IN SPORTS FIELD/LAWN GAMES AREA. CONTRACTOR TO VERIFY QUANTITY IN FIELD.


WGI
2035 Vista Parkway, West Palm Beach, FL 33411
Phone No. 866.909.2220 www.wginc.com
Cert No. 6091 - LB No. 7055


| NO | DATE | DESCRIPTION | BY |
|---|---|---|---|
| 1 | 11-20-2020 | RESUBMITTAL | BJ |
| 2 | 12-21-2020 | RESUBMITTAL | BJ |
| 3 | 01-15-2021 | RESUBMITTAL | BJ |
| 4 | 02-24-2021 | RESUBMITTAL | BJ |

REVISIONS

CAD 54070-LP.DWG
JOB NO. 5407.01
DRAWN BY BJ/LC/DN
CHECK BY TM
DATE 10/07/2020

LANDSCAPE ARCHITECT OF RECORD
TIFFANY DELYNN MAY
FL# LA6667274

DAVIS ROAD PROPERTY
PALM SPRINGS, FL

**LANDSCAPE PLAN**

SHEET:
LP-1.02


Bryan Jackman C:\pwworkingphj\bryan.jackman\d1899816\54070-LP.dwg .pdf Plotted: 2/24/2021 1:08:07 PM Saved: 2/24/2021 1:24:56 PM

## SMALL PALM STAKING PLAN

NTS.

NOTE:
1. APPLICABLE TO ALL PALMS WITH CALIPER SIZE OF LESS THAN SIX (6) INCHES.
2. ALL TREE SUPPORTS MATERIALS ARE TO BE REMOVED FROM EACH TREE ONCE IT IS ESTABLISHED. TYPICALLY SIX MONTHS FOR SHADE TREES OR ONE YEAR FOR PALMS.

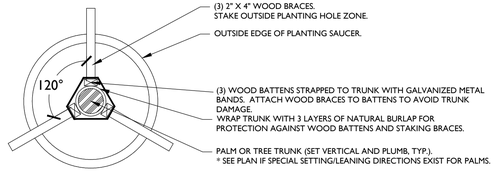


## LARGE PALM OR TREE STAKING PLAN

NTS.

NOTE:
1. APPLICABLE TO ALL MULTI-TRUNK PALMS AND PALMS WITH CALIPER SIZE OF SIX (6) INCHES OR GREATER
2. ALL TREE SUPPORTS MATERIALS ARE TO BE REMOVED FROM EACH TREE ONCE IT IS ESTABLISHED. TYPICALLY SIX MONTHS FOR SHADE TREES OR ONE YEAR FOR PALMS.

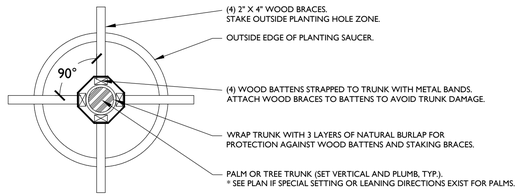


## PALM PLANTING DETAIL

NTS.

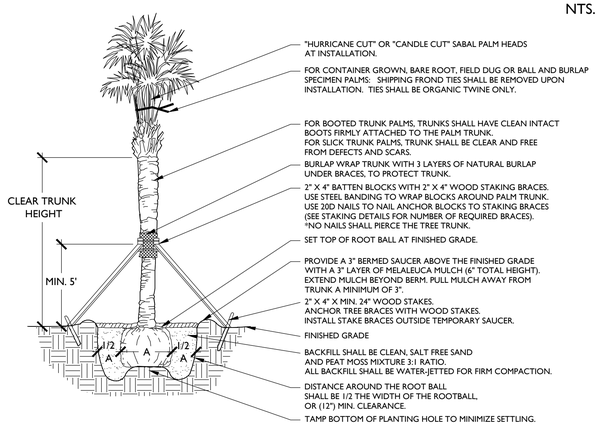


## TREE PLANTING DETAIL

NOTE:
1. ALL TREE SUPPORT MATERIALS ARE TO BE REMOVED FROM EACH TREE ONCE IT IS ESTABLISHED. TYPICALLY SIX MONTHS TO ONE YEAR AFTER PLANTING FOR SHADE TREES.

NTS.

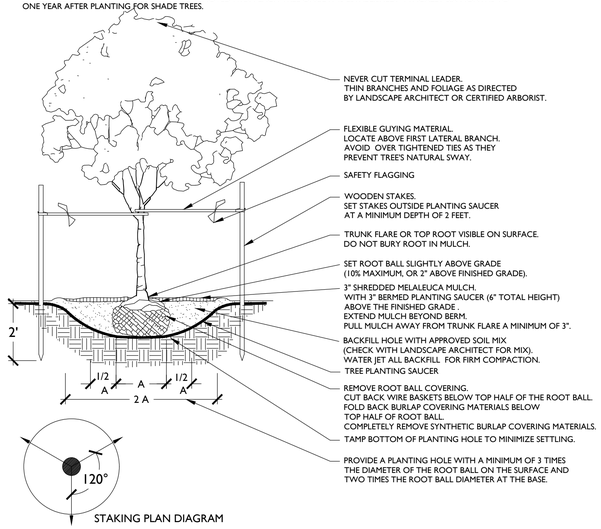


## GROUNDCOVER DETAIL

NTS.

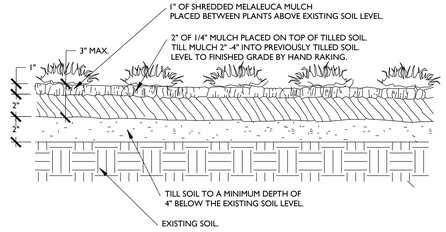


## PLANT SPACING DETAIL

NTS.

| SPACING "D" | ROW "A" |
|---|---|
| 6" O.C. | 5.2" |
| 8" O.C. | 6.93" |
| 10" O.C. | 8.66" |
| 12" O.C. | 10.4" |
| 18" O.C. | 15.6" |
| 24" O.C. | 20.8" |
| 30" O.C. | 26.0" |
| 36" O.C. | 31.2" |
| 48" O.C. | 41.6" |

PLANT SPACING CHART

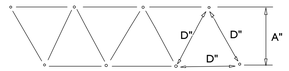


## SHRUB PLANTING DETAIL

NTS.

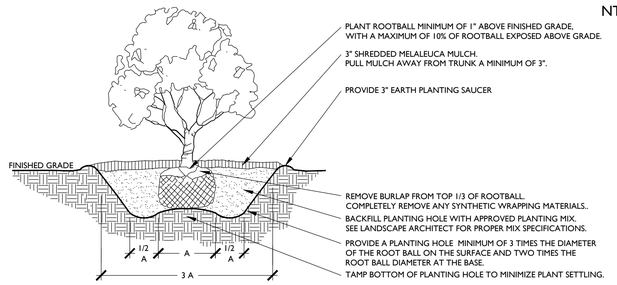


## ROOT BARRIER DETAIL

NOTE:
1. TREES ARE TO BE INSTALLED WITH A MINIMUM TEN FOOT (10') SEPARATION FROM ANY PUBLIC WATER OR PUBLIC SEWER MAIN AND/OR SERVICE, HYDRANTS, AND LIFT STATIONS. IF A TEN FOOT (10') SEPARATION CANNOT BE ACHIEVED, THE TREE SHALL BE INSTALLED WITH A ROOT BARRIER SYSTEM.

2. ROOT BARRIERS SHALL COMPLY WITH ALL REQUIREMENTS OF THE MUNICIPALITY WITHIN WHICH THEY ARE LOCATED AS WELL AS WITH ANY REQUIREMENTS OF THE UTILITY HOLDER OF THE AFFECTED UTILITIES. IN THE EVENT THAT CONFLICTING REQUIREMENTS EXIST BETWEEN THIS ROOT BARRIER DETAIL AND THE MUNTICIPALITY/UTILITY HOLDER REQUIREMENTS, THE MORE STRINGENT OF THE REQUIREMENTS SHALL BE APPLICABLE.

NTS.

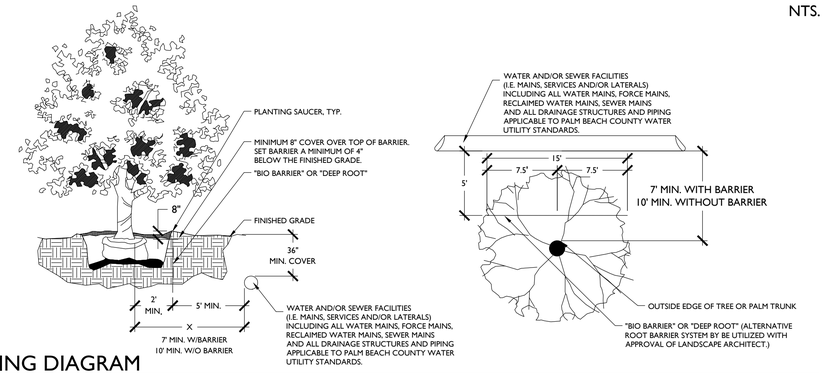


## TYPICAL PLANTING DIAGRAM

NTS.

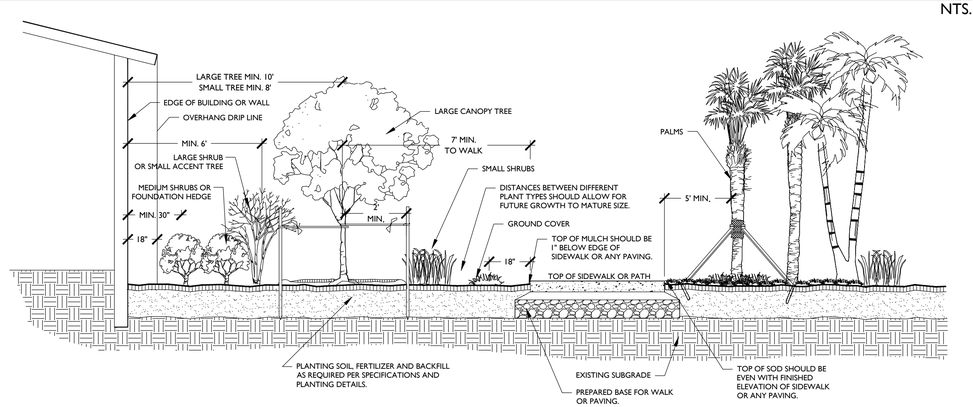


## TREE PROTECTION DETAIL

NOTE: 1. THIS DETAIL APPLIES TO ALL TREES THAT WILL BE PRESERVED IN PLACE OR BE RELOCATED.

NTS.

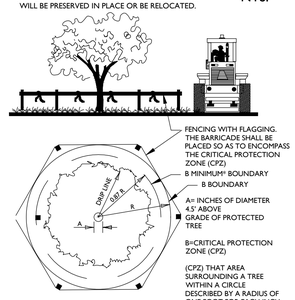


## SHRUB AND GROUNDCOVER PLANTING DETAIL

NTS.

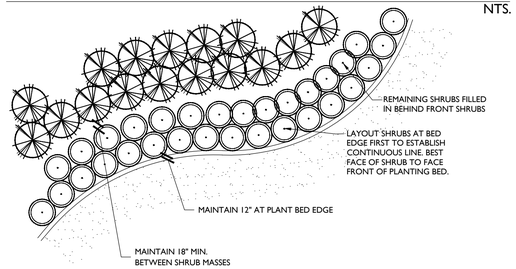


## LANDSCAPE NOTES:

1. STRUCTURAL ELEMENTS AND HARDSCAPE FEATURES INDICATED ON LANDSCAPE PLANS ARE FOR INFORMATIONAL PURPOSES ONLY. LANDSCAPE PLANS ARE TO BE UTILIZED FOR LOCATION OF LIVING PLANT MATERIAL ONLY. LANDSCAPE PLANS SHOULD NOT BE UTILIZED FOR STAKING AND LAYOUT OR LOCATION OF ANY STRUCTURAL SITE FEATURES INCLUDING BUT NOT LIMITED TO: BUILDINGS, SIGNAGE, PATHWAYS, EASEMENTS, BERMS, WALL, FENCES, UTILITIES OR ROADWAYS.
2. CONTRACTOR SHALL ACQUIRE ALL APPLICABLE FEDERAL, STATE, LOCAL, JURISDICTIONAL OR UTILITY COMPANY PERMITS REQUIRED PRIOR TO REMOVAL, RELOCATION, AND/OR INSTALLATION OF LANDSCAPE MATERIALS INDICATED WITHIN PLAN DOCUMENTS. THE CONTRACTOR SHALL HAVE PERMITS "IN HAND" PRIOR TO STARTING WORK. LANDSCAPE ARCHITECT SHALL BEAR NO RESPONSIBILITY FOR WORK PERFORMED WITHOUT PERMITTED DRAWINGS. THE CONTRACTOR SHALL BE RESPONSIBLE FOR ALL CHANGES TO THE WORK, AT NO ADDITIONAL COST TO THE OWNER, AS A RESULT OF UNAUTHORIZED WORK PRIOR TO RECEIPT OF PERMIT.
3. TREES SHOWN ON THIS PLAN ARE FOR GRAPHIC REPRESENTATION ONLY. TREE SPACING IS BASED ON DESIGN REQUIREMENTS AND THE TREES SHOWN ON THESE PLANS ATTEMPT TO ACCOMPLISH THAT SPACING WHILE MAINTAINING THE REQUIRED SETBACKS FROM UTILITIES. IN THE EVENT OF A CONFLICT, AFFECTED PLANT MATERIAL SHALL BE FIELD ADJUSTED WITH THE APPROVAL OF THE LANDSCAPE ARCHITECT TO AVOID CONFLICTS WITH THE WITH EXISTING AND PROPOSED UTILITIES, LIGHT POLES, DRAINAGE STRUCTURES OR LINES, LAKE MAINTENANCE EASEMENTS OR OTHER AFFECTED SITE FEATURES.
4. ANY PLANTING WITHIN THE SIGHT TRIANGLES SHALL PROVIDE UNOBSTRUCTED VIEWS AT A LEVEL BETWEEN 30" AND 8' ABOVE THE PAVEMENT.
5. ALL UTILITY BOXES/ STRUCTURES TO BE SCREENED ON 3 SIDES W/ APPROVED PLANTING MATERIAL.
6. IRRIGATION IS REQUIRED PROVIDING 100% COVERAGE WITH A MAXIMUM OF 50% OVERLAP, AN AUTOMATIC RAIN SENSOR MUST BE INCLUDED.
7. ALL PLANT MATERIAL TO BE INSTALLED SHALL CONFORM TO FLORIDA POWER AND LIGHT'S (FPL'S) RIGHT TREE RIGHT PLACE GUIDELINES.
8. IN CASE OF DISCREPANCIES PLANS TAKE PRECEDENCE OVER PLANT LIST.
9. LANDSCAPE CONTRACTOR RESPONSIBLE FOR VERIFICATION OF ALL QUANTITIES PRIOR TO BIDDING.
10. REMOVAL OF EXISTING VEGETATION IS RESPONSIBILITY OF LANDSCAPE CONTRACTOR.
11. RELOCATION OF EXISTING VEGETATION IS RESPONSIBILITY OF LANDSCAPE CONTRACTOR. REFER TO SPECIFICATIONS FOR RELOCATION INSTRUCTIONS.
12. ALL PLANT MATERIAL TO BE FLORIDA GRADE #1 AT TIME OF INSTALLATION UNLESS OTHERWISE NOTED.

WGL
2035 Vista Parkway, West Palm Beach, FL 33411
Phone No. 866.909.2220 www.wglinc.com
Cert No. 6091 - LB No. 7055

| REVISIONS | | | |
|---|---|---|---|
| NO | DATE | DESCRIPTION | BY |
| 1 | 11-20-2020 | RESUBMITTAL | BJ |
| 2 | 12-17-2020 | RESUBMITTAL | BJ |
| 3 | 01-15-2021 | RESUBMITTAL | BJ |
| 4 | 02-24-2021 | RESUBMITTAL | BJ |

| | |
|---|---|
| CAD 5407014-LP.DWG | |
| JOB NO. | 5407.01 |
| DRAWN BY | BJ/LC/DN |
| CHECK BY | TM |
| DATE | 10/07/2020 |

LANDSCAPE ARCHITECT OF RECORD
TIFFANY DELYNN MAY
FL# LA6667274

DAVIS ROAD PROPERTY
PALM SPRINGS, FL

**LANDSCAPE DETAILS**

SHEET:
LP-5.00

Bryan Jackman C:\pwworking\mgr\bryan.jackman\d186661\05407014-LP.dwg pdf Plotted: 2/24/2021 5:08:07 PM Saved: 2/24/2021 1:24:56 PM

## Landscape Planting - Part I. General

I. Description of Work

A. Provide all exterior planting as shown on the drawings or inferable therefrom and/or as specified in accordance with the requirements of the Contract Documents. Landscape plans provided indicate the proposed location of living plant material only. Structural elements and hardscape features indicated on the landscape plans are for information purposes only. Landscape plans are not to be utilized for staking and layout or location of any structural site features including but not limited to, buildings, signage, pathways, easements, utilities or roadways.

B. These specifications include standards necessary for and incidental to the execution and completion of planting as indicated on the prepared drawings and specified herein.

C. All applicable federal, state and local permits shall be attained prior to the removal, relocation, or installation of plant materials indicated within the plan documents.

D. Protection of existing features. During construction, protect all existing trees, shrubs, and other specified vegetation, site features and improvements, structures, and utilities specified herein and/or on submitted drawings. Removal or destruction of existing plantings is prohibited unless specifically authorized by the owner, and with permit as required by associated federal, state and local government agencies.

II. Applicable Standards

A. American National Standards for Tree Care Operations, ANSI A300. American National Standards Institute, 11 West 42nd Street, New York, N.Y. 10036.

B. American Standard for Nursery Stock, ANSI Z60.1. American Nursery and Landscape Association, 1250 Eye Street. NW, Suite 500, Washington, D.C. 20005.

C. Hortus Third, The Staff of the L.H. Bailey Hortorium. 1976. MacMillan Publishing Co., New York.

D. Florida Department of Agriculture "Grades and Standards for Nursery Plants", most recent addition.

E. National Arborist Association- Pruning Standards for Shade Trees

F. All standards shall include the latest additions and amendments as of the date of advertisement for bids

III. Qualifications

A. Landscape planting and related work shall be performed by a firm with a minimum of five years experience specializing in this type of work. All contractors and their sub-contractors who will be performing any landscape work included in this section of the specification shall be approved by the landscape architect.

B. Landscape Contractor shall be licensed and shall carry any necessary insurance and shall protect the Landscape Architect and Owner against all liabilities, claims or demands for injuries or damage to any person or property growing out of the performance of the work under this contract. All workers shall be covered by Workman's Compensation Insurance.

IV. Requirements of Regulatory Agencies

A. Certificates of inspection shall accompany the invoice for each shipment of plants as may be required by law for transportation. File certificates with the landscape architect prior to acceptance of the material. Inspection by federal or state authorities at place of growth does not preclude rejection of the plants at the site.

V. Submittals

A. Manufacturer's Data: Submit copies of the manufacturer's and/or source data for all materials specified, including soils, soil amendments and fertilizer materials. Comply with regulations applicable to landscape materials.

B. Samples: Submit samples of all topsoil, soil mixes, mulches, and organic materials. Samples shall weigh 1 kg (2 lb) and be packaged in plastic bags. Samples shall be typical of the lot of material to be delivered to the site and provide an accurate indication of color, texture, and organic makeup of the material.

C. Nursery Sources: Submit a list of all nurseries that will supply plants, along with a list of the plants they will provide and the location of the nursery.

D. Soil Test: Submit soil test analysis report for each sample of topsoil and planting mix from a soil testing laboratory approved by the landscape architect.

1. Provide a particle size analysis, including the following gradient of mineral content:

| USDA Designation | Size in mm |
|---|---|
| Gravel | +2 mm |
| Very Course Sand | 1-2 mm |
| Coarse Sand | 0.5-1 mm |
| Medium Sand | 0.25-0.5 mm |
| Fine Sand | 0.1-0.25 mm |
| Very fine sand | 0.05-0.1 mm |
| Silt | 0.002-0.05 mm |
| Clay | smaller than 0.002 |

2. Provide a chemical analysis, including the following:
   a. pH and buffer pH
   b. Percentage of organic content by oven-dried weight.
   c. Nutrient levels by parts per million, including phosphorus, potassium magnesium, manganese, iron, zinc, and calcium. Nutrient test shall include the testing laboratory recommendations for supplemental additions to the soil based on the requirements of horticultural plants.
   d. Soluble salt by electrical conductivity of a 1:2, soil: water, sample measured in millimho per cm.
   e. Cation exchange capacity (CEC).

E. Material Testing: Submit the manufacturers particle size analysis, and the pH analysis and provide a description and source location for the content material of all organic materials.

F. Maintenance Instructions: Prior to the end of maintenance period, Landscape Contractor shall furnish three copies of written maintenance instructions to the Landscape Architect for transmittal to the Owner for maintenance and care of installed plants through their full growing season.

VI. Utility Verification

A. The contractor shall contact the local utility companies for verification of the location of all underground utility lines in the area of the work. The contractor shall be responsible for all damage resulting from neglect or failure to comply with this requirement.

## Part 2. Materials

I. Plants

A. Plants shall be true to species and variety specified and nursery-grown in accordance with good horticultural practices under climatic conditions similar to those in the locality of the project for at least two years. They shall have been freshly dug.
1. All plant names and descriptions shall be as defined in Hortus Third.
2. All plants shall be grown and harvested in accordance with the American Standard for Nursery Stock and Florida Department of Agriculture Grades and Standards for Nursery Plants.
3. Unless approved by the landscape architect, plants shall have been grown at a latitude not more than 325 km (200 miles) north or south of the latitude of the project unless the provenance of the plant can be documented to be compatible with the latitude and cold hardiness zone of the planting location.

B. Unless specifically noted, all plants shall be exceptionally heavy, symmetrical, and so trained or favored in development and appearance as to be unquestionably and outstandingly superior in form, compactness, and symmetry. They shall be sound, healthy, vigorous, well branched, and densely foliated when in leaf; free of disease and insects, eggs, or larvae; and shall have healthy, well-developed root systems. They shall be free from physical damage or other conditions that would prevent vigorous growth.
1. Trees with multiple leaders, unless specified, will be rejected. Trees with a damaged or crooked leader, bark abrasions, sunscald, disfiguring knots, insect damage, or cuts of limbs over 20 mm (3/4 in.) in diameter that are not completely closed will be rejected.

C. Plants shall conform to the measurements specified, except that plants larger than those specified may be used if approved by the landscape architect. Use of larger plants shall not increase the contract price. If larger plants are approved, the root ball shall be increased in proportion to the size of the plant.
1. Caliper measurements shall be taken on the trunk 150 mm (6 in.) above the natural ground line for trees up to and including 100 mm (4 in.) in caliper, and 300 mm (12 in.) above the natural ground line for trees over 100 mm (4 in.) in caliper. Height and spread dimensions specified refer to the main body of the plant and not from branch tip to branch tip. Plants shall be measured when branches are in their normal position. If a range of sizes is given, no plant shall be less than the minimum size, and no less than 50 percent of the plants shall be as large as the maximum size specified. Measurements specified are minimum sizes acceptable after pruning, where pruning is required. Plants that meet measurements but do not possess a standard relationship between height and spread, according to the Florida Department of Agriculture Grades and Standards for Nursery Plants, shall be rejected.

D. Substitutions of plant materials will not be permitted unless authorized in writing by the landscape architect. If proof is submitted in writing that a plant specified is not obtainable, consideration will be given to the nearest available size or similar variety, with a corresponding adjustment of the contract price.

E. The plant schedule provided at the end of this section, or on the drawing, is for the contractor's information only, and no guarantee is expressed or implied that quantities therein are correct or that the list is complete. The contractor shall ensure that all plant materials shown on the drawings are included in his or her bid.

F. All plants shall be labeled by plant name. Labels shall be attached securely to all plants, bundles, and containers of plant materials when delivered. Plant labels shall be durable and legible, with information given in weather-resistant ink or embossed process lettering.

G. Selection and Tagging
1. Plants shall be subject to inspection for conformity to specification requirements and approval by the landscape architect at their place of growth and upon delivery. Such approval shall not impair the right of inspection and rejection during progress of the work.
2. A written request for the inspection of plant material at their place of growth shall be submitted to the landscape architect at least ten calendar days prior to digging. This request shall state the place of growth and the quantity of plants to be inspected. The landscape architect may refuse inspection at this time if, in his or her judgment, sufficient quantities of plants are not available for inspection or landscape architect deems inspection is not required.
3. All field grown deciduous trees shall be marked to indicate the trees north orientation in the nursery. Place a 1-in. diameter spot of white paint onto the north side of the tree trunk within the bottom 12 inches of the trunk.

H. Anti-Desiccants
1. Anti-desiccants, if specified, are to be applied to plants in full leaf immediately before digging or as required by the landscape architect. Anti-desiccants are to be sprayed so that all leaves and branches are covered with a continuous protective film.

I. Balled and Burlapped (B&B) Plant Materials
1. Trees designated B&B shall be properly dug with firm, natural balls of soil retaining as many fibrous roots as possible, in sizes and shapes as specified in the Florida Department of Agriculture Grades and Standards for Nursery Plants. Balls shall be firmly wrapped with synthetic, natural, or treated burlap, and/or wire. All synthetic fabric should be removed from the rootball prior to planting. True biodegradable burlap can be left around the root ball. The root collar shall be apparent at surface of ball. Trees with loose, broken, processed, or manufactured root balls will not be accepted, except with special written approval before planting.

J. Container Plants
1. Plants grown in containers shall be of appropriate size for the container as specified in the most recent edition of the Florida Department of Agriculture Grades and Standards for Nursery Plants and be free of circling roots on the exterior and interior of the root ball.
2. Container plants shall have been grown in the container long enough to have established roots throughout the growing medium.

K. Bareroot and Collected Plants
1. Plants designated as bareroot or collected plants shall conform to the American Standard for Nursery Stock.
2. Bareroot material shall not be dug or installed after bud break or before dormancy.
3. Collected plant material that has not been taken from active nursery operations shall be dug with a root ball spread at least 1/3 greater than nursery grown plants. When specified or approved, shall be in good health, free from disease, insect or weed infestation and shall not be planted before inspection and acceptance at the site. Testing may be required at the discretion of the Landscape Architect and/or the Owner and shall be provided at no additional cost.

L. Specimen Material: Plant material specified as specimens are to be approved by the Landscape Architect before being brought to the site. Unless otherwise noted on the drawings, these plants shall be Florida Fancy.

M. Palms
1. Coconut Palms shall be grown from a certified seed.
2. All palm species except Sabal palmetto shall have roots adequately wrapped before transporting.
3. Sabal palms shall have a hurricane cut. Sabal palms shall be installed on site at the earliest opportunity in the construction process. All Sabal palms shall be from Palm Beach County or other sandy soils. All Sabal palms shall be Florida Fancy.
4. For booted trunk palms, trunks shall have clean intact boots firmly attached to the palm trunk. For slick trunk palms, trunk shall be clear and free from defect and scars.
5. The Contractor shall treat all palms as required to prevent infestation by the palmetto weevil.

N. Sod
1. Sod shall be graded #1 or better. Sod shall be loam or muck grown with a firm, full texture and good root development. Sod shall be thick, healthy and free from defects and debris including but not limited to dead thatch, insects, fungus, diseases and contamination by weeds, other grass varieties or objectionable plant material.
2. Sod shall be sufficiently thick to insure a dense stand of live grass. Sod shall be live, fresh, and uninjured at the time of planting. Plant sod within 48 hours after harvesting.
3. Sod area shall be all areas not otherwise identified and shall include the area beyond the property line to the edge of pavement and/or edge of water.

O. Immediately after harvesting plants, protect from drying and damage until shipped and delivered to the planting site. Rootballs shall be checked regularly and watered sufficiently to maintain root viability.

P. Transportation and Storage of Plant Material
1. Branches shall be tied with rope or twine only, and in such a manner that no damage will occur to the bark or branches.
2. During transportation of plant material, the contractor shall exercise care to prevent injury and drying out of the trees. Should the roots be dried out, large branches broken, balls of earth broken or loosened, or areas of bark torn, the landscape architect may reject the injured tree(s) and order them replaced at no additional cost to the owner. All loads of plants shall be covered at all times with tarpaulin or canvas. Loads that are not protected will be rejected.
3. All bareroot stock sent from the storage facility shall be adequately covered with wet soil, sawdust, woodchips, moss, peat, straw, hay, or other acceptable moisture-holding medium, and shall be covered with a tarpaulin or canvas. Loads that are not protected in the above manner may be rejected.
4. Plants must be protected at all times from sun or drying winds. Those that cannot be planted immediately on delivery shall be kept in the shade, well protected with soil, wet mulch, or other acceptable material, and kept well watered. Plants shall not remain unplanted any longer than three days after delivery. Plants shall not be bound with wire or rope at any time so as to damage the bark or break branches. Plants shall be lifted and handled with suitable support of the soil ball to avoid damaging it.

Q. Mechanized Tree Spade Requirements

Trees may be moved and planted with an approved mechanical tree spade. The tree spade shall move trees limited to the maximum size allowed for a similar B&B root-ball diameter according to the American Standard for Nursery Stock or the manufacturer's maximum size recommendation for the tree spade being used, whichever is smaller. The machine shall be approved by the landscape architect prior to use. Trees shall be planted at the designated locations in the manner shown in the plans and in accordance with applicable sections of the specifications.

II Materials for Planting

A. Mulch: Except as otherwise specified, mulch shall be shredded Melaleuca mulch - grade "A". All Melaleuca mulch shall be made entirely from the wood and bark of the Melaleuca quinquinerva tree. It shall not contain more than 10% bark (by volume). Shreds and chips shall not be larger the ¾" diameter and 1½" in length. Mulch shall be free of weeds, seeds, and any other organic or inorganic material other than Melaleuca wood and bark. It shall not contain stones or other foreign material that will prevent its eventual decay. This shall be applied to all planted areas where indicated so that, after installation, the mulch thickness will not be less than 3". Submit sample for approval.

B. Peat: Shall be horticultural peat composed of not less than 60% decomposed organic matter by weight, on an oven dried basis. Peat shall be delivered to the site in a workable condition free from lumps.

C. Gravel Mulch: Use only where specifically indicated on the plans of the size and type shown. Unless otherwise specified it shall be water-worn, hard durable gravel, washed free of loam, sand, clay and other foreign substances. It shall be a minimum of 3" deep and shall be contained with edging or other approved gravel stop as indicated on the plans. It shall be a maximum of 1 1/2", a minimum of 3/4" and of a readily-available natural gravel color range. Provide geotextile filter fabric below aggregate rock. Submit sample for approval.

D. Root Barrier: Where specified, root barriers shall be installed on all tree and palm material in accordance with the root barrier detail provided within the plan drawings. Root barriers shall comply with all requirements of the municipality within which they are located as well as with any utility holder requirements of any affected utilities. In the event that conflicting requirements exist between the root barrier detail provided within the plan documents and the municipality/utility holder requirements, the more stringent of the requirements shall be applicable.

E. Planter Edging: Use only where specifically indicated on plans. Edging shall be the color black.

F. Anti-desiccant: shall be an emulsion specifically manufactured for agricultural use, which provides a protective film over plant surfaces. Anti-desiccants shall be delivered in containers of the manufacturer and shall be mixed according to the manufacturer's directions. Submit manufacturer literature for approval.

III. Materials for Soil Amendment

A. Pine Bark: Horticultural-grade milled pine bark, with 80 percent of the material by volume sized between 0.1 and 15.0 mm.
1. Pine bark shall be aged sufficiently to break down all woody material. Pine bark shall be screened.
2. pH shall range between 4 and 7.0.
3. Submit manufacturer literature for approval.

B. Organic Matter: Leaf matter and yard waste composted sufficiently to break down all woody fibers, seeds, and leaf structures, and free of toxic and nonorganic matter. Organic matter shall be commercially prepared compost. Submit 0.5 kg (1 lb) sample and suppliers literature for approval.

C. Course Sand: Course concrete sand, ASTM C-33 Fine Aggregate, with a Fines Modulus Index of 2.75 or greater.
1. Sands shall be clean, sharp, natural sands free of limestone, shale and slate particles.
2. Provide the following particle size distribution:

| Sieve | Percentage Passing |
|---|---|
| 3/8 in (9.5 mm) | 100 |
| No. 4 (4.75 mm) | 95-100 |
| No. 8 (2.36 mm) | 80-100 |
| No. 16 (1.18 mm) | 50-85 |
| No. 30 (0.60 mm) | 25-60 |
| No. 50 (0.30 mm) | 10-30 |
| No. 100 (0.15 mm) | 2-10 |

D. Lime: shall be ground, palletized, or pulverized lime manufactured to meet agricultural standards and contain a maximum of 60 percent oxide (i.e. calcium oxide plus magnesium oxide). Submit manufacturer literature for approval.

E. Sulfur: shall be flowers of sulfur, pelletized or granular sulfur, or iron sulfate. Submit manufacturer literature for approval.

F. Fertilizer: Agricultural fertilizer of a formula indicated by the soil test. Fertilizers shall be organic, slow-release compositions whenever applicable. Submit manufacturer literature for approval.

IV. Planting Mix

A. Planting Mix
1. Planting Mix for Trees, Shrubs, Groundcovers and vines: Check with landscape architect for appropriate mixture.
2. Planting Mix for Palms: Mixture of course sand and peat mixed to the following proportion:

| Component | Percent by Volume |
|---|---|
| Coarse Sand | 75% |
| Peat | 25% |

B. Planting mix shall be thoroughly mixed, screened, and shredded.

C. Prior to beginning the mixing process, submit a 1-kg (2-lb) sample of the proposed mix with soil test results that indicate the mix ratio and the results achieved.

D. During the mixing process but prior to installing the mix, submit a 1-kg (2-lb) sample for each 200 cubic meters (250 cubic yards) of planting mix, taken randomly from the finished soil mix, with soil test results for approval. In the event that the test results do not meet the required particle size distribution, remix and resubmit a revised planting mix.

E. Make all amendments of lime/sulfur and fertilizer indicated by the soil test results at the time of mixing.

F. All mixing shall take place in the contractors yard, using commercial mixing equipment sufficient to thoroughly mix all components uniformly

G. Protect the planting mix from erosion prior to installation.

## Part 3. Execution

I. Excavation of Planted Areas

A. Locations for plants and/or outlines of areas to be planted are to be staked out at the site. Locate and mark all subsurface utility lines. Approval of the stakeout by the landscape architect is required before excavation begins.

B. Tree, shrub, and groundcover beds are to be excavated to the depth and widths indicated on the landscape plan detail drawings. If the planting area under any tree is initially dug too deep, the soil added to bring it up to the correct level should be thoroughly tamped.
1. The sides of the excavation of all planting areas shall be sloped at a 45 degrees. The bottom of all beds shall slope parallel to the proposed grades or toward any subsurface drain lines within the planting bed. The bottom of the planting bed directly under any tree shall be horizontal such that the tree sits plumb.
2. Maintain all required angles of repose of the adjacent materials as shown on the drawings. Do not excavate compacted subgrades of adjacent pavement or structures.
3. Subgrade soils shall be separated from the topsoil, removed from the area, and not used as backfill in any planted or lawn area. Excavations shall not be left uncovered or unprotected overnight.

C. For trees and shrubs planted in individual holes in areas of good soil that is to remain in place and/or to receive amendment in the top 150-mm (6 in.) layer, excavate the hole to the depth of the root ball and to widths shown on the drawing. Slope the sides of the excavation at a 45 degree angle up and away from the bottom of the excavation.
1. In areas of slowly draining soils, the root ball may be set up to 75 mm (3 in.) or 1/8 of the depth of the root ball above the adjacent soil level.
2. Save the existing soil to be used as backfill around the tree.
3. On steep slopes, the depth of the excavation shall be measured at the center of the hole and the excavation dug as shown on the drawings.

D. Detrimental soil conditions: The landscape architect is to be notified, in writing, of soil conditions encountered, including poor drainage, that the contractor considers detrimental to the growth of plant material. When detrimental conditions are uncovered, planting shall be discontinued until instructions to resolve the conditions are received from the landscape architect.

E. Obstructions: If rock, underground construction work, utilities, tree roots, or other obstructions are encountered in the excavation of planting areas, alternate locations for any planting shall be determined by the landscape architect.

II. Installation of Planting Mix

A. Prior to the installation of the planting mix, install subsurface drains, irrigation main lines, lateral lines, and irrigation risers shown on the drawings.

B. The landscape architect shall review the preparation of subgrades prior to the installation of planting mix.

C. Do not proceed with the installation of planting mix until all utility work in the area has been installed.

D. Protect adjacent walls, walks, and utilities from damage or staining by the soil. Use 12-mm (1/2 in.) plywood and/or plastic sheeting as directed to cover existing concrete, metal, masonry work, and other items as directed during the progress of the work.
1. Clean up any soil or dirt spilled on any paved surface at the end of each working day.
2. Any damage to the paving or architectural work caused by the soils installation contractor shall be repaired by the general contractor at the soils installation contractors expense.

E. Till the subsoil into the bottom layer of topsoil or planting mix.
1. Loosen the soil of the subgrade to a depth of 50 to 75 mm (2 to 3 in.) with a rototiller or other suitable device.
2. Spread a layer of the specified topsoil or planting mix 50 mm (2 in.) deep over the subgrade. Thoroughly till the planting mix and the subgrade together.
3. Immediately install the remaining topsoil or planting mix in accordance with the following specifications. Protect the tilled area from traffic. DO NOT allow the tilled subgrade to become compacted.
4. In the event that the tilled area becomes compacted, till the area again prior to installing the planting mix.

F. Install the remaining topsoil or planting mix in 200- to 250-mm (8- to 10-in.) lifts to the depths and shown on the drawing details. The depths and grades shown on the drawings are the final grades after soil settlement and shrinkage of the organic material. The contractor shall install the soil at a higher level to anticipate this reduction of soil volume, depending on predicted settling properties for each type of soil.
1. Phase the installation of the soil such that equipment does not have to travel over already-installed topsoil or planting mixes.
2. Compact each lift sufficiently to reduce settling but not enough to prevent the movement of water and feeder roots through the soil. The soil in each lift should feel firm to the foot in all areas and make only slight heel prints. Overcompaction shall be determined by the following field percolation test.
   a. Dig a hole 250 mm (10 in.) in diameter and 250 mm (10 in.) deep.
   b. Fill the hole with water and let it drain completely. Immediately refill the hole with water, and measure the rate of fall in the water level.
   c. In the event that the water drains at a rate less than 25 mm (1 in.) per hour, till the soil to a depth required to break the overcompaction.
   d. The landscape architect shall determine the need for, and the number and location of percolation tests based on observed field conditions of the soil.
3. Maintain moisture conditions within the soils during installation to allow for satisfactory compaction. Suspend installation operations if the soil becomes wet. Do not place soils on wet subgrade.
4. Provide adequate equipment to achieve consistent and uniform compaction of the soils. Use the smallest equipment that can reasonably perform the task of spreading and compaction.
5. Add lime, sulfur, fertilizer, and other amendments during soil installation. Spread the amendments over the top layer of soil and till into the top 100 mm (4 in.) of soil. Soil amendments may be added at the same time that organic matter, when required, is added to the top layer of soil.
6. Protect soil from overcompaction after placement. An area that becomes overcompacted shall be tilled to a depth of 125 mm (6 in.). Uneven or settled areas shall be filled and regraded.

III. Fine Grading

A. It shall be the responsibility of the Contractor to finish grade (min. 6" below adjacent F.F.E.). Finish grades in planting areas shall be one inch lower than adjacent paving and are to include 3" of mulching. New earthwork shall blend smoothly into the existing earthwork, and grades shall pitch evenly between spot grades. All planted areas must pitch to drain at a minimum of 1/4" per foot. Any discrepancies not allowing this to occur shall be reported to the Landscape Architect prior to continuing work.

B. Fill all dips and remove any bumps in the overall plane of the slope.
1. The tolerance for dips and bumps in lawn areas shall be a 12-mm (1/2 in.) deviation from the plane in 3,000 mm (10 ft).
2. The tolerance for dips and bumps in shrub planting areas shall be a 25-mm (1 in.) deviation from the plane in 3,000 mm (10 ft).
3. All fine grading shall be inspected and approved by the landscape architect prior to planting, mulching, sodding, or seeding.

C. Berming shall not be placed within 10' of any existing tree nor will it be allowed to encroach upon any utility, drainage, or maintenance easement. Berming shall not impede or obstruct any necessary swales needed to drain other areas for the property.

IV. Planting Operations

A. Plants shall be set on flat-tamped or unexcavated pads at the same relationship to finished grade as they were to the ground from which they were dug, unless otherwise noted on the drawings. Plants must be set plumb and braced in position until topsoil or planting mix has been placed and tamped around the base of the root ball. Improper compacting of the soil around the root ball may result in the tree settling or leaning. Plants shall be set so that they will be at the same depth and so that the root ball does not shift or move laterally one year later.
1. Determine the elevation of the root flare and ensure that it is planted at grade. This may require that the tree be set higher than the grade in the nursery.
2. If the root flare is less than 50 mm (2 in.) below the soil level of the root ball, plant the tree the appropriate level above the grade to set the flare even with the grade. If the flare is more than 50 mm (2 in) at the center of the root ball the tree shall be rejected.

B. Lift plants only from the bottom of the root balls or with belts or lifting harnesses of sufficient width not to damage the root balls. Do not lift trees by their trunk or use the trunk as a lever in positioning or moving the tree in the planting area.

C. Remove plastic, paper, or fiber pots from containerized plant material. Pull roots out of the root mat. Loosen the potting medium and shake away from the root mat. Immediately after removing the container, install the plant such that the roots do not dry out. Pack planting mix around the exposed roots while planting.

D. The roots of bare-root trees shall be pruned at the time of planting to remove damaged or undesirable roots (those likely to become a detriment to future growth of the root system). Bare-root trees shall have the roots spread to approximate the natural position of the roots and shall be centered in the planting pit. The planting-soil backfill shall be worked firmly into and around the roots, with care taken to fill in completely with no air pockets.

E. Cut ropes or strings from the top of shrub root balls and trees smaller than 3 in. caliper after plant has been set. Remove burlap or cloth wrapping and any wire baskets from around top half of balls. Do not turn under and bury portions of burlap at top of ball.
1. Do not immediately remove the ropes and burlap from trees larger than 3 in. caliper. Return to each tree three months after planting and cut all ropes around the trunks and tops of the root balls of these trees.
2. Completely remove any waterproof or water-repellant strings or wrappings from the root ball and trunk before backfilling.

F. Set balled and burlapped trees in the hole with the north marker facing north unless otherwise approved by the landscape architect.

G. Place native soil, topsoil, or planting mix into the area around the tree, tamping lightly to reduce settlement.
1. For plants planted in individual holes in existing soil, add any required soil amendments to the soils, as the material is being backfilled around the plant. Ensure that the amendments are thoroughly mixed into the backfill.
2. For plants planted in large beds of prepared soil, add soil amendments during the soil installation process.
3. Ensure that the backfill immediately around the base of the root ball is tamped with foot pressure sufficient to prevent the root ball from shifting or leaning.

H. Solid sod shall be laid with closely abutting joints with a tamped or rolled, even surface. Stagger strips to offset joints in adjacent courses. Bring the sod edge in a neat, clean manner to the edge of all paving and shrub areas. Sod along slopes shall be pegged to hold sod in place along slopes or banks a wood peg acceptable to the Landscape Architect shall be used at no additional cost to the Owner. If, in the opinion of the Landscape Architect, top-dressing is necessary after rolling, clean sand will be evenly applied over the entire surface and thoroughly washed in without additional charge.

I. Thoroughly water all plants immediately after planting. Apply water by hose directly to the root ball and the adjacent soil.

J. Remove all tags, labels, strings, etc. from all plants.

K. Remove any excess soil, debris, and planting material from the job site at the end of each workday.

L. Form watering saucers 100 mm (4 in.) high immediately outside the area of the root ball of each tree as indicated on the drawings.

V. Relocation of Existing Material:

A. Landscape Contractor shall root prune trees which are to be relocated in accordance with approved horticultural practices and the following procedures.
1. Select a healthy tree
2. Selectively trim the canopy removing dead limbs, cross branching over crowned areas, and lower undesirable limbs. Fertilize and water trees before pruning.
3. Root prune 50% of the root system approximately 18"-2' deep (depending upon species and size). This is done by hand with sharp hand tools or a root pruning saw. The diameter of the root ball to be pruned is 8-12 inches per every one inch of diameter at breast height of the tree.
4. Back fill the existing soil with peat moss to stimulate new root growth of the pruned roots.
5. Water in thoroughly and treat with a mycorrhizae and a low nitrogen fertilizer (so not to burn the pruned roots). Brace trees if deemed necessary.
6. The root pruned tree should be watered every day (especially during warm months of the season), the equivalent of 5 gallons for every DBH of tree per day.
7. Root pruned trees should be let to stand for a minimum of 6 weeks for trees less than 8" DBH and as long as 3 months for larger specimens prior to transplanting.
8. For best results and survivorship, new root growth should be evident on root pruned trees prior to transplanting.
9. Upon transplanting, water should be applied every day as outlined in step 6 for at least one year.

VI. Staking and Guying

A. The Contractor shall stake all trees and palms in accordance with the tree and palm staking details provided within the plan drawings. Alternate methods of guying or staking may be employed with the prior approval of the Landscape Architect.

B. The Contractor shall be responsible for the replacement or adjustment of all trees, palms or shrubs that fall or lean during the guarantee period. The Contractor shall be responsible for any damage caused by the falling or leaning of trees.

C. Stakes and guys shall be installed immediately upon approval or planting, and shall be removed in accordance with the staking details provide within the plan drawings. Any tree that is not stable at the end of the warranty period shall be rejected.

VII. Pruning

A. Plants shall not be heavily pruned at the time of planting. Pruning is required at planting time to correct defects in the tree structure, including removal of injured branches, waterspouts, suckers, and interfering branches. Healthy lower branches and interior small twigs should not be removed except as necessary to clear walks and roads. In no case should more than one-quarter of the branching structure be removed. Retain the normal or natural shape of the plant.

B. All pruning shall be completed using clean, sharp tools. All cuts shall be clean and smooth, with the bark intact with no rough edges or tears.

C. Pruning of large trees shall be done from a hydraulic man-lift such that it is not necessary to climb the tree.

VIII. Mulching

A. All trees, palms, shrubs, and other plantings will be mulched with mulch previously approved by the landscape architect. The mulch shall be a minimum 3" thick layer over all tree, shrub and ground cover planting areas, unless otherwise specified. All mulch layers shall be of the specified thickness at the time of the final acceptance of the work. Mulch must not be placed within 3 inches of the trunks of trees, palms or shrubs.

B. Place mulch at least 3" in depth in a circle around all trees located in lawn areas. The diameter of the circle shall be 18" in diameter larger than the ball of the plant provided. Mulch must not be placed within 3 inches of the trunks of trees, palms or shrubs.

IX. Maintenance of Trees, Shrubs, and Vines

A. Maintenance shall begin immediately after each plant is planted and continue until its acceptance has been confirmed by the landscape architect.

B. Maintenance shall consist of pruning, watering, cultivating, weeding, mulching, fertilizing, tightening and repairing guys and stakes, resetting plants to proper grades or upright position, restoring of the planting saucer, and furnishing and applying such sprays or other materials as necessary to keep plantings free of insects and diseases and in vigorous condition.

C. Planting areas and plants shall be protected at all times against trespassing and damage of all kinds for the duration of the maintenance period. If a plant becomes damaged or injured, it shall be treated or replaced as directed by the landscape architect at no additional cost.

D. Watering: Contractor shall irrigate as required to maintain vigorous and healthy tree growth. Overwatering or flooding shall not be allowed. The contractor shall monitor, adjust, and use existing irrigation facilities, if available, and furnish any additional material, equipment, or water to ensure adequate irrigation. Root balls of all trees and large shrubs shall be spot watered using handheld hoses during the first four months after planting, as required to ensure adequate water within the root ball.

E. During periods of restricted water usage, all governmental regulations (permanent and temporary) shall be followed. The contractor may have to transport water from ponds or other sources, at no additional expense to the owner when irrigation systems are unavailable.

F. Remove soil ridges from around watering basins prior to end of maintenance period, as directed by Landscape Architect

X. Acceptance

A. The landscape architect shall inspect all work for acceptance upon written request of the contractor. The request shall be received at least ten calendar days before the anticipated date of inspection.

B. Acceptance of plant material shall be for general conformance to specified size, character, and quality and shall not relieve the contractor of responsibility for full conformance to the contract documents, including correct species.

C. Upon completion and re-inspection of all repairs or renewals necessary in the judgment of the landscape architect, the landscape architect shall certify in writing that the work has been accepted.

XI. Acceptance in Part

A. Work may be accepted in parts when the landscape architect and contractor deem that practice to be in their mutual interest. Approval must be given in writing by the landscape architect to the contractor verifying that the work is to be completed in parts. Acceptance of work in parts shall not waive any other provision of this contract.

XII. Guarantee Period and Replacements

A. The guarantee period for trees and shrubs shall begin at the date of acceptance.

B. The contractor shall guarantee all plant material to be in healthy and flourishing condition for a period of one year from the date of acceptance.

C. When work is accepted in parts, the guarantee periods extend from each of the partial acceptances to the terminal date of the guarantee of the last acceptance. Thus, all guarantee periods terminate at one time.

D. The contractor shall replace, without cost, as soon as weather conditions permit, and within a specified planting period, all plants determined by the landscape architect to be dead or in an unacceptable condition during and at the end of the guarantee period. To be considered acceptable, plants shall be free of dead or dying branches and branch tips and shall bear foliage of normal density, size, and color. Replacements shall closely match adjacent specimens of the same species. Replacements shall be subject to all requirements stated in this specification.

E. The guarantee of all replacement plants shall extend for an additional period of one year from the date of their acceptance after replacement. In the event that a replacement plant is not acceptable during or at the end of said extended guarantee period, the landscape architect may elect subsequent replacement or credit for that item.

F. At the end of the guarantee, the contractor shall reset grades that have settled below the proposed grades on the drawings.

G. The contractor shall make periodic inspections, at no extra cost, during the guarantee period to determine what changes, if any, should be made in the maintenance program. If changes are recommended, they shall be submitted in writing to the landscape architect. Claims by the contractor that the owners maintenance practices or lack of maintenance resulted in dead or dying plants will not be considered if such claims have not been documented by the contractor during the guarantee period.

XIII. Final Inspection and Final Acceptance

At the end of the guarantee period and upon written request of the contractor, the landscape architect will inspect all guaranteed work for final acceptance. The request shall be received at least ten calendar days before the anticipated date for final inspection. Upon completion and re-inspection of all repairs or renewals necessary in the judgment of the landscape architect at that time, the landscape architect shall certify, in writing, that the project has received final acceptance.

WGI™
2035 Vista Parkway, West Palm Beach, FL 33411
Phone No. 866.909.2220 www.wginc.com
Cert No. 6091 - LB No. 7055

REVISIONS

| NO. | DATE | DESCRIPTION | BY |
|---|---|---|---|
| 1 | 11-20-2020 | RESUBMITTAL | BJ |
| 2 | 12-21-2020 | RESUBMITTAL | BJ |
| 3 | 01-15-2021 | RESUBMITTAL | BJ |
| 4 | 02-24-2021 | RESUBMITTAL | BJ |

| | |
|---|---|
| CAD | 540701-LP.DWG |
| JOB NO. | 5407.01 |
| DRAWN BY | BJ/LC/DN |
| CHECK BY | TM |
| DATE | 10/07/2020 |

LANDSCAPE ARCHITECT OF RECORD
TIFFANY DELYNN MAY
FL# LA6667274

DAVIS ROAD PROPERTY
PALM SPRINGS, FL

**LANDSCAPE SPECIFICATIONS**

SHEET:
LP-6.00

Bryan Jackman C:\pwworking\wgi\bryan.jackman\d1899616\540701-LP.dwg pdf Plotted: 2/24/2021 5:08:08 PM Saved: 2/24/2021 3:24:56 PM

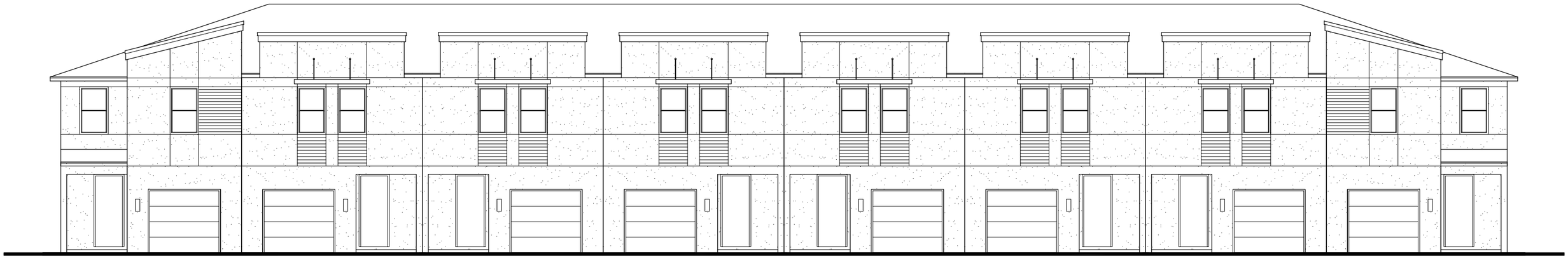

T163 T148 T148 T148 T148 T148 T148 T148 T163

# SFL - 8 Unit - CONTEMPORARY - FRONT ELEVATION

Fieldstone ARCHITECTURE & ENGINEERING

08-07-2020



T163 T148 T148 T148 T148 T148 T148 T163

Fieldstone ARCHITECTURE & ENGINEERING

# SFL - 8 Unit - CONTEMPORARY - REAR ELEVATION

08-07-2020

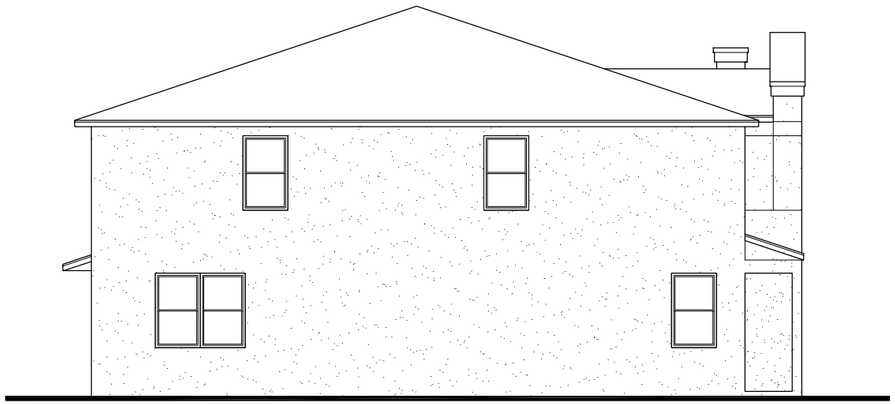

T163

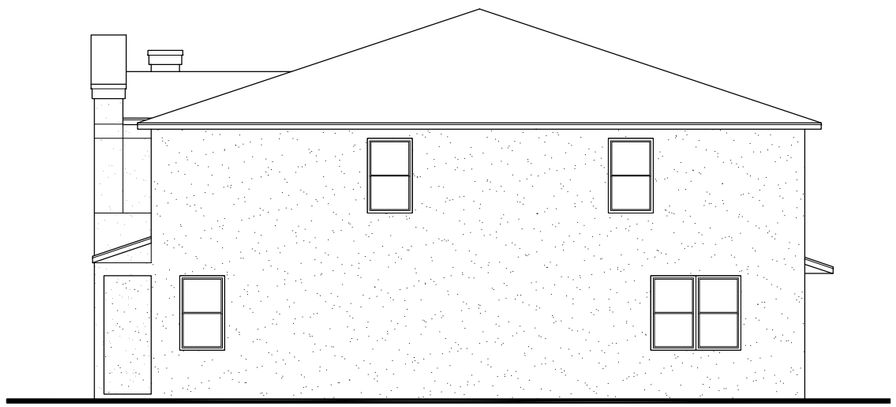

T163

Fieldstone ARCHITECTURE & ENGINEERING

# SFL - 8 Unit - CONTEMPORARY - SIDE ELEVATION

08-07-2020

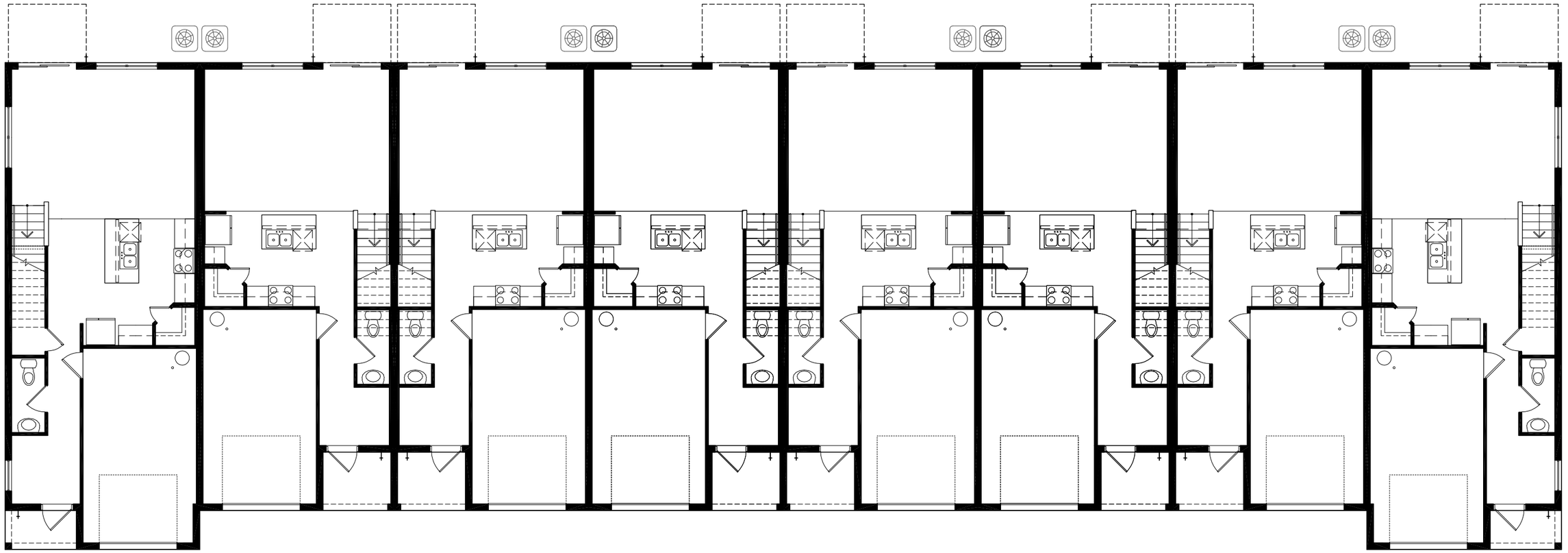

T163 T148 T148 T148 T148 T148 T148 T163

Fieldstone ARCHITECTURE & ENGINEERING

# SFL - 8 Unit - CONTEMPORARY - 1st floor

08-07-2020

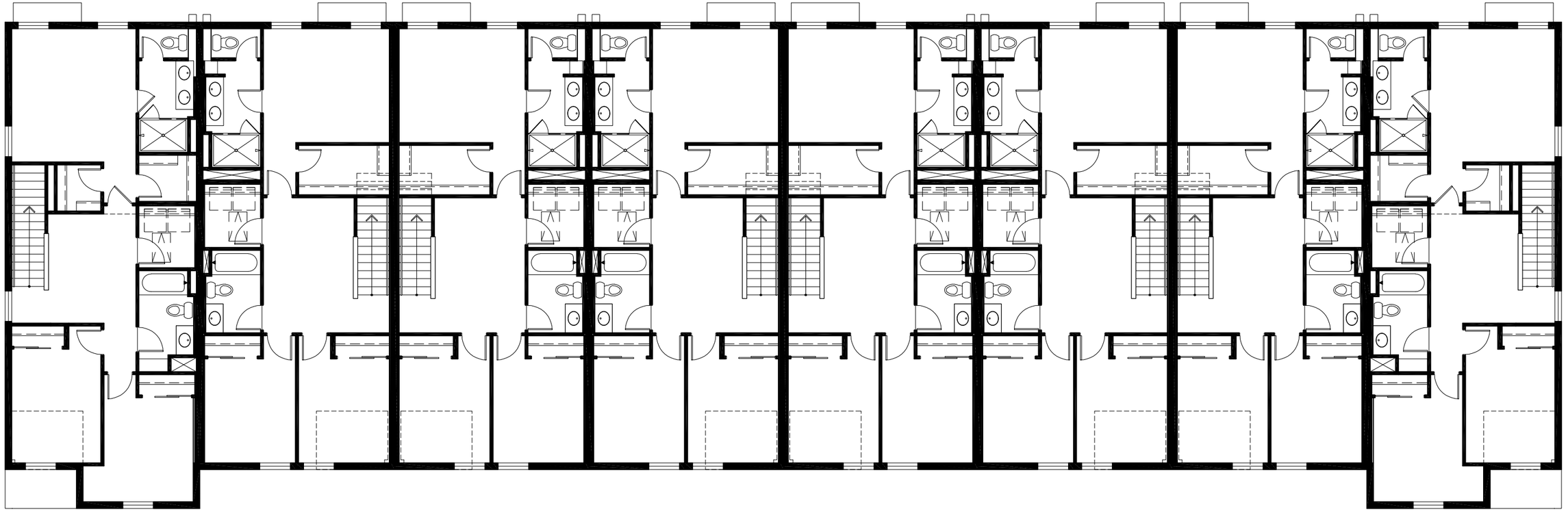

T163 T148 T148 T148 T148 T148 T148 T163

Fieldstone ARCHITECTURE & ENGINEERING

# SFL - 8 Unit - CONTEMPORARY - 2nd floor

08-07-2020

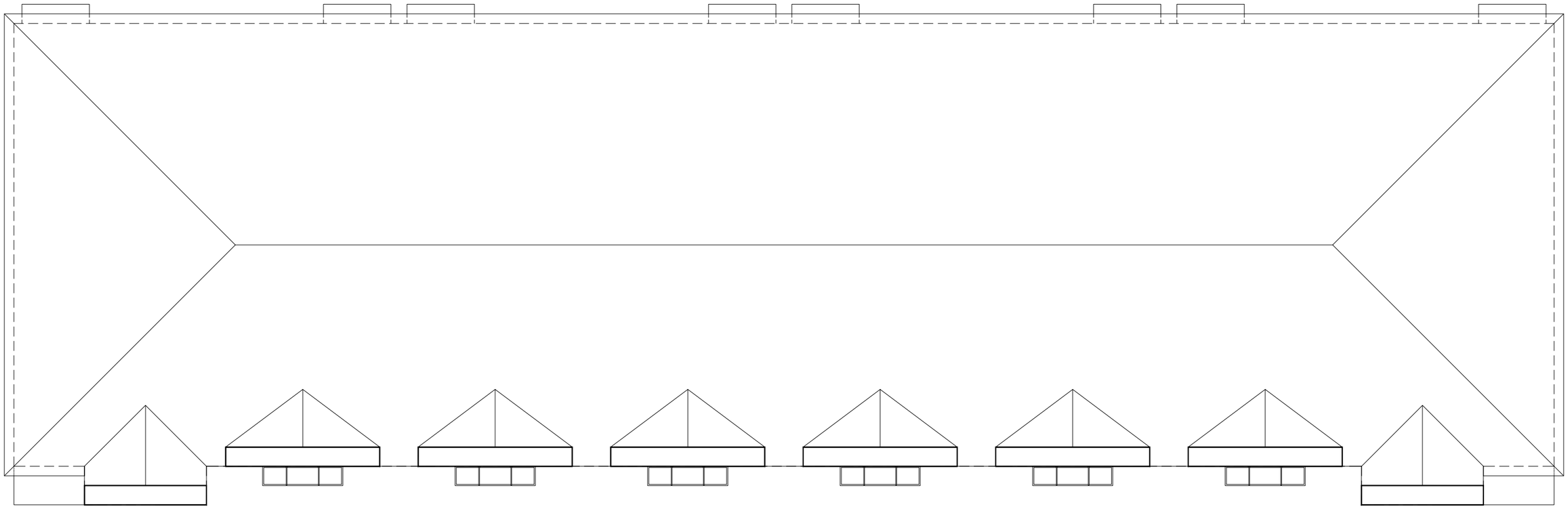

T163 T148 T148 T148 T148 T148 T148 T148 T163

Fieldstone ARCHITECTURE & ENGINEERING

# SFL - 8 Unit - CONTEMPORARY - Roof

08-07-2020



T163 T148 T148 T148 T148 T148 T163

Fieldstone ARCHITECTURE & ENGINEERING

# SFL - 7 Unit - CONTEMPORARY - FRONT ELEVATION

08-07-2020



T163 T148 T148 T148 T148 T148 T163

Fieldstone ARCHITECTURE & ENGINEERING

# SFL - 7 Unit - CONTEMPORARY - REAR ELEVATION

08-07-2020

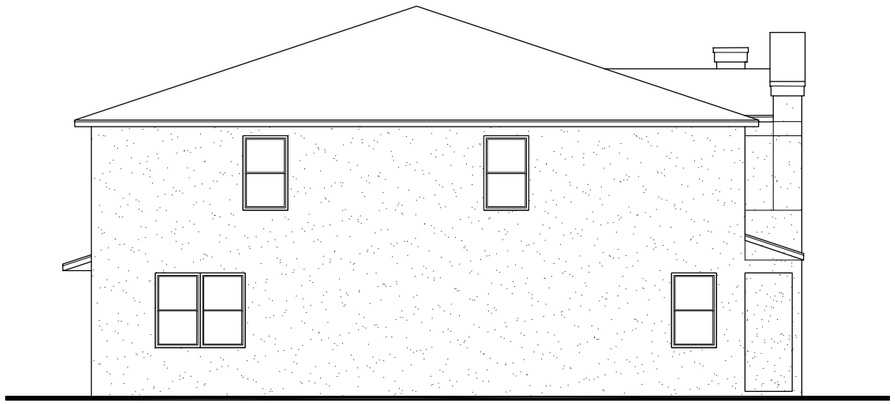

T163

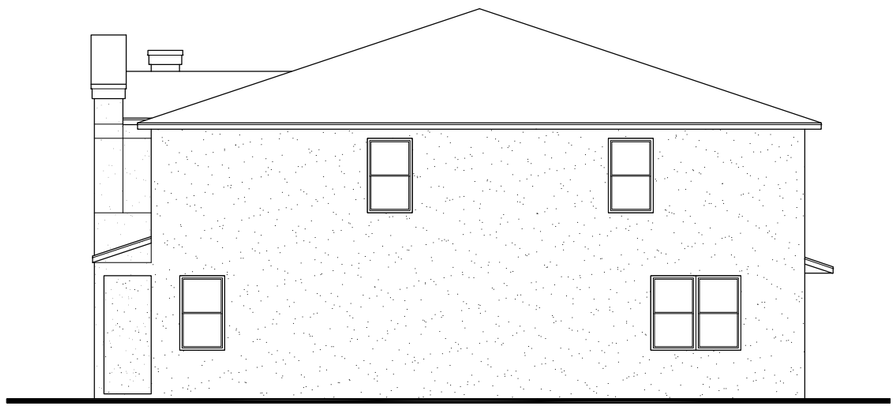

T163

# SFL - 7 Unit - CONTEMPORARY - SIDE ELEVATION

Fieldstone ARCHITECTURE & ENGINEERING

08-07-2020



T163 T148 T148 T148 T148 T148 T163

Fieldstone ARCHITECTURE & ENGINEERING

# SFL - 7 Unit - CONTEMPORARY - 1st floor

08-07-2020

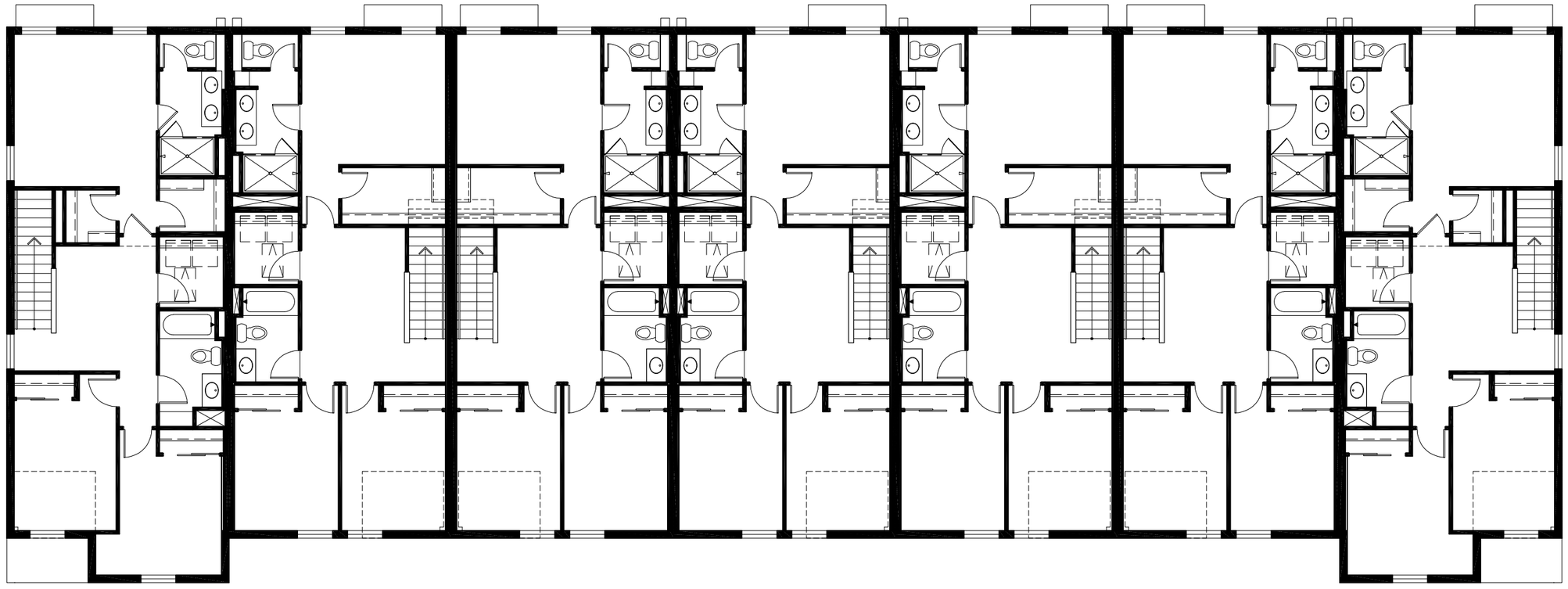

T163 T148 T148 T148 T148 T148 T163

Fieldstone ARCHITECTURE & ENGINEERING

# SFL - 7 Unit - CONTEMPORARY - 2nd floor

08-07-2020

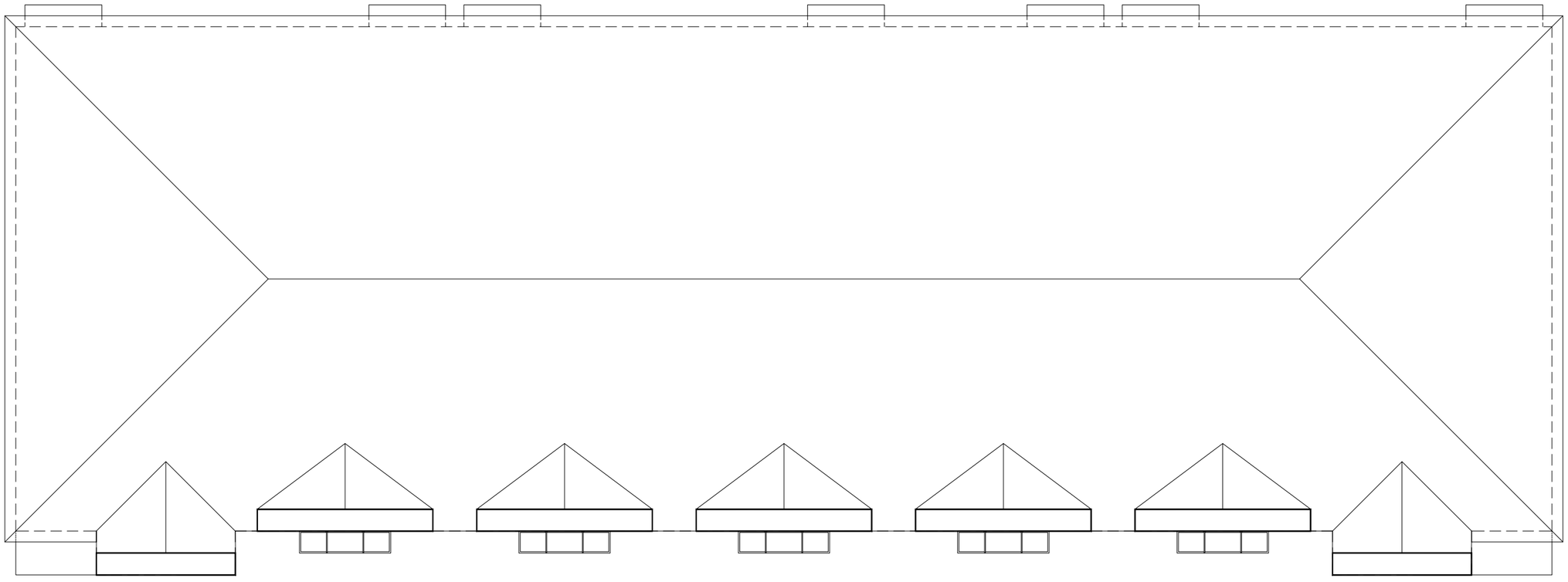

T163 T148 T148 T148 T148 T148 T163

Fieldstone ARCHITECTURE & ENGINEERING

# SFL - 7 Unit - CONTEMPORARY - Roof

08-07-2020



T163 T148 T148 T148 T148 T163

Fieldstone ARCHITECTURE & ENGINEERING

# SFL - 6 Unit - CONTEMPORARY - FRONT ELEVATION

08-07-2020

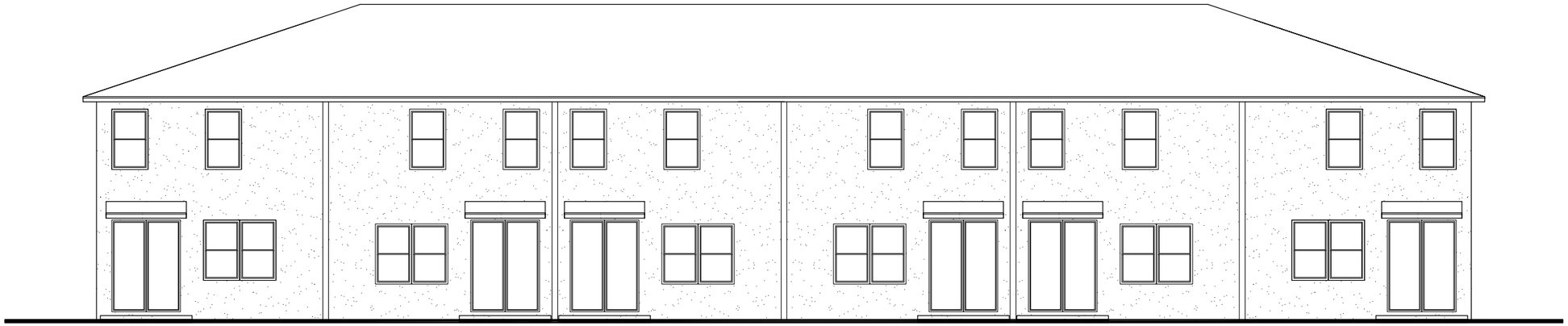

T163 T148 T148 T148 T148 T163

# SFL - 6 Unit - CONTEMPORARY - REAR ELEVATION

Fieldstone ARCHITECTURE & ENGINEERING

08-07-2020

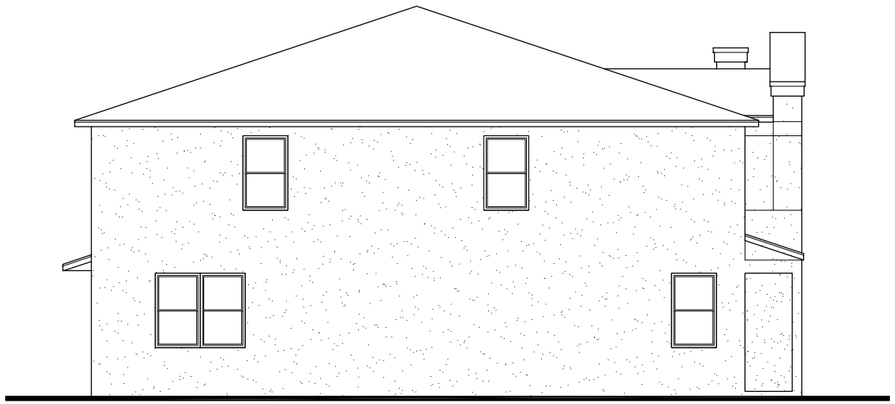

T163

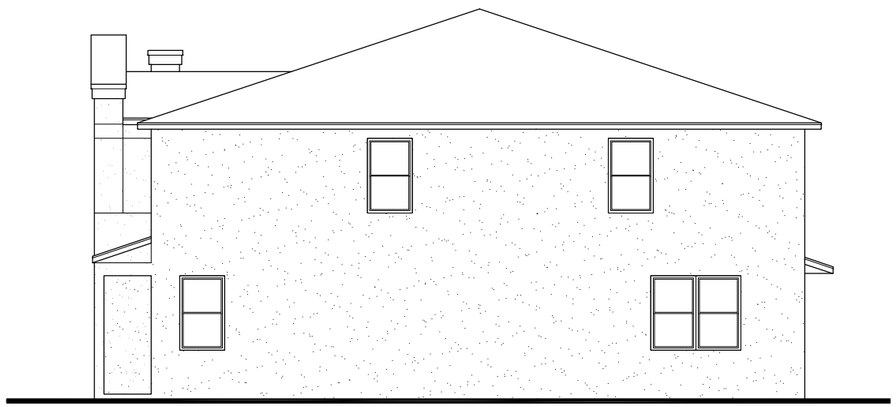

T163

# SFL - 6 Unit - CONTEMPORARY - SIDE ELEVATION

Fieldstone ARCHITECTURE & ENGINEERING

08-07-2020

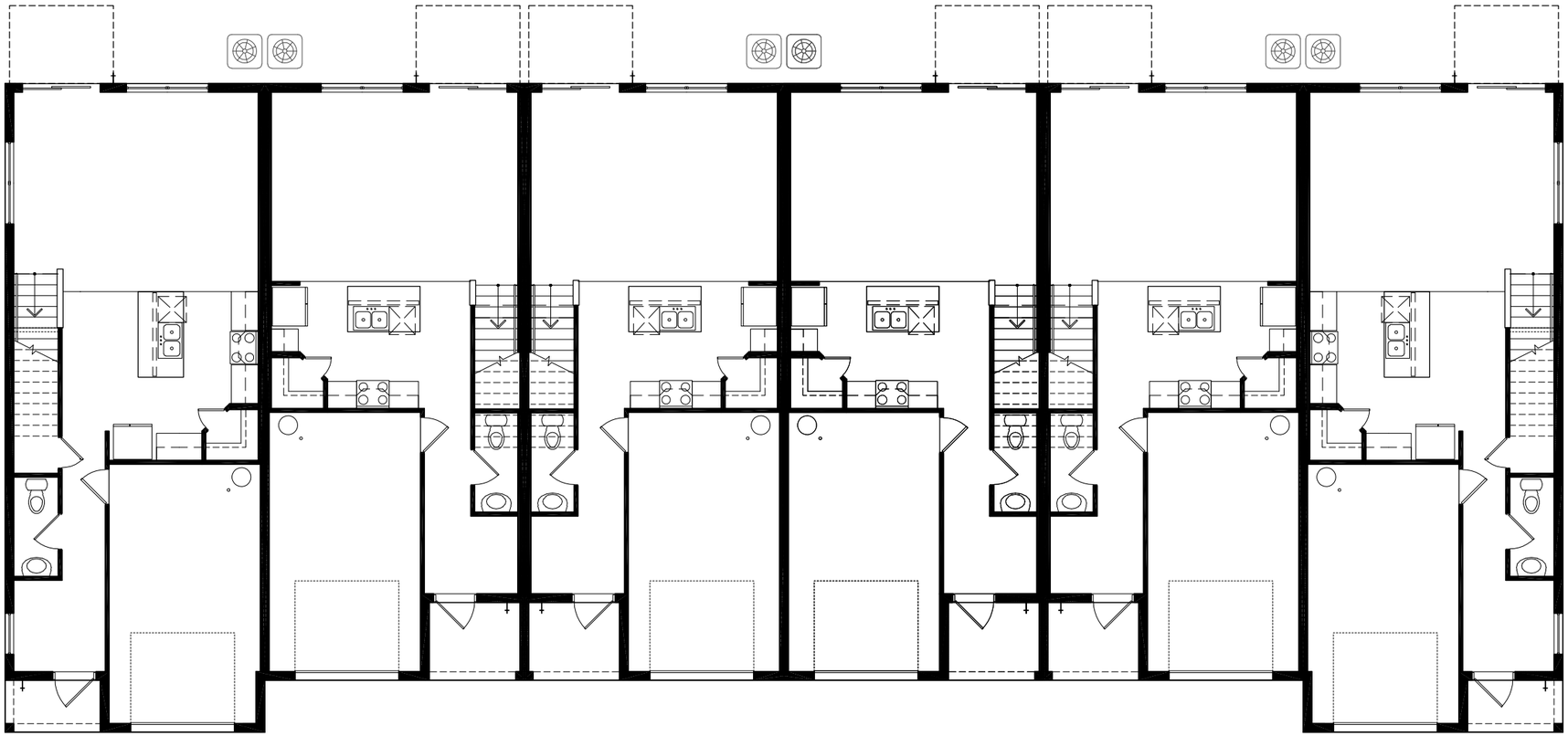

T163 T148 T148 T148 T148 T163

Fieldstone ARCHITECTURE & ENGINEERING

# SFL - 6 Unit - CONTEMPORARY - 1st floor

08-07-2020

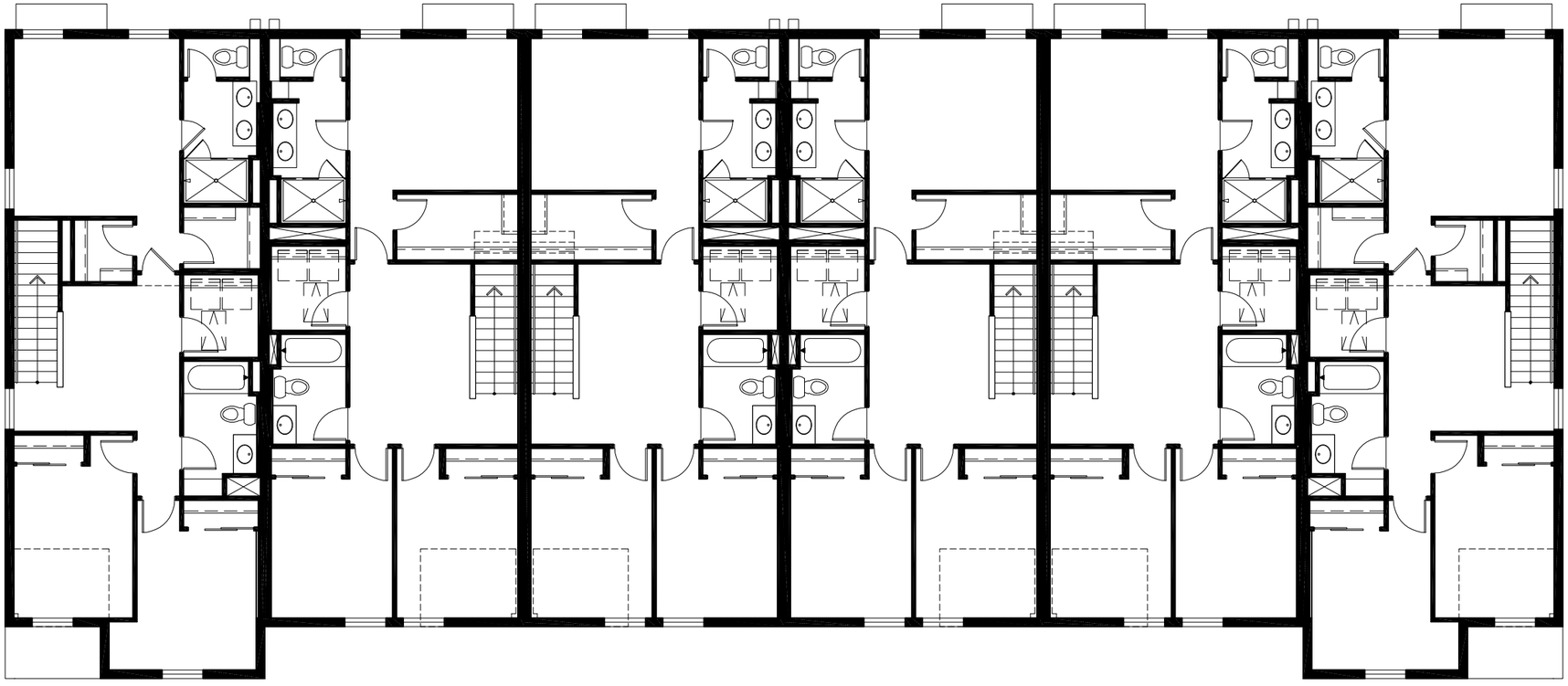

T163 T148 T148 T148 T148 T163

Fieldstone ARCHITECTURE & ENGINEERING

# SFL - 6 Unit - CONTEMPORARY - 2nd floor

08-07-2020

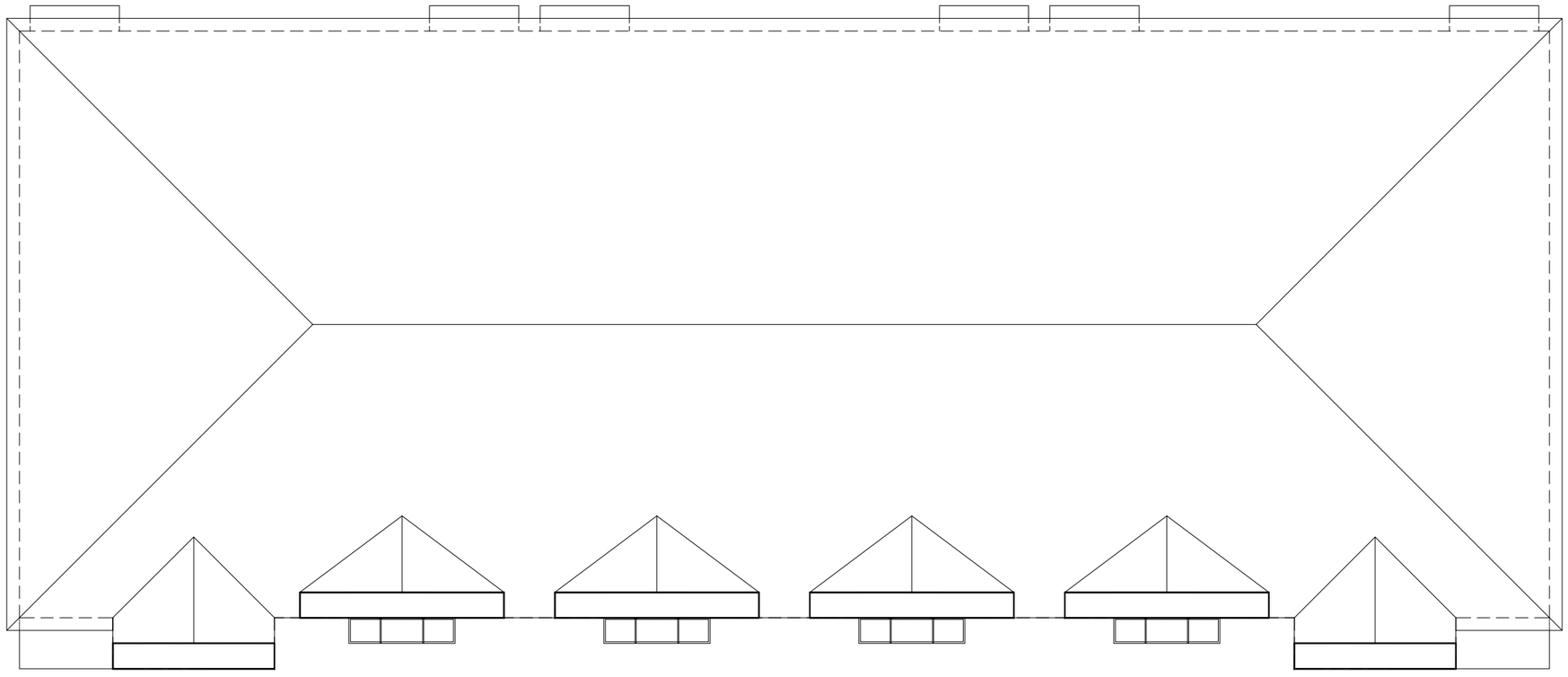

T163 T148 T148 T148 T148 T163

Fieldstone ARCHITECTURE & ENGINEERING

# SFL - 6 Unit - CONTEMPORARY - Roof

08-07-2020




# SITE DEVELOPMENT PLANS
FOR
# FONTANA TOWNHOMES
## VILLAGE OF PALM SPRINGS, FL
JANUARY 2021

## PROJECT TEAM


DEVELOPER
MERITAGE HOMES – SOUTH FLORIDA DIVISION
1127 GATEWAY BLVD.
BOYNTON BEACH, FL 33426
PHONE: (561) 847–7517
CONTACT: DANTE FRAIEGARI

CIVIL ENGINEER
KIMLEY–HORN AND ASSOCIATES, INC.
1615 SOUTH CONGRESS AVENUE, SUITE 201
DELRAY BEACH, FL 33445
PHONE: (561) 330–2545
CONTACT: MICHAEL D. SPRUCE, P.E.

PLANNER
WANTMAN GROUP, INC.
2035 VISTA PWKY
WEST PALM BEACH, FL 33411
PHONE: (561) 687–2220
CONTACT: JARROD PURSER





VICINITY MAP
NOT TO SCALE
SECTION: 30 TOWNSHIP: 44 RANGE: 43E

4063 DAVIS RD
PALM SPRINGS, FL 33461-4601

## Sheet List Table

| Sheet Number | Sheet Title |
|---|---|
| C0.00 | COVER SHEET |
| C1.00 | GENERAL NOTES |
| C1.01 | GENERAL NOTES |
| C2.00 | DEMOLITION PLAN |
| C3.00 | EROSION AND SEDIMENTATION CONTROL PLAN |
| C3.10 | EROSION AND SEDIMENTATION CONTROL DETAILS |
| C4.00 | HORIZONTAL CONTROL PLAN |
| C4.10 | SITE DETAILS |
| C5.00 | PAVING GRADING AND DRAINAGE PLAN |
| C5.01 | CROSS SECTIONS PLAN |
| C5.10 | PAVING GRADING AND DRAINAGE DETAILS |
| C6.00 | UTILITY PLAN |
| C6.02 | UTILITY PLAN – OFFSITE |
| 1 OF 4 | WUD – PWS–1 |
| 2 OF 4 | WUD – PWS–2 |
| 3 OF 4 | WUD – PWS–3 |
| 4 OF 4 | WUD – PWS–4 |
| 1 OF 5 | WUD – WW–1 |
| 2 OF 5 | WUD – WW–2 |
| 3 OF 5 | WUD – WW–3 |
| 4 OF 5 | WUD – WW–4 |
| 5 OF 5 | WUD – WW–5 |
| C7.00 | PHOTOMETRICS PLAN |
| C8.00 | AUTOTURN PLAN |
| C8.01 | AUTOTURN PLAN |

PLANS ARE IN NAVD 1988 DATUM

Always call 811 two full business days before you dig to have underground utilities located and marked.
Sunshine811.com

THE PRESENCE OF GROUNDWATER SHOULD BE ANTICIPATED. CONTRACTOR'S BID SHALL INCLUDE CONSIDERATION FOR ADDRESSING THIS ISSUE AND OBTAINING ALL NECESSARY PERMITS.

| No. | REVISIONS | DATE | BY |
|---|---|---|---|
| 1 | VILLAGE OF PALM SPRINGS COMMENTS | 01/14/21 | YXY |
| 2 | VILLAGE OF PALM SPRINGS COMMENTS | 12/17/20 | TVC |


Kimley»Horn
© 2021 KIMLEY–HORN AND ASSOCIATES, INC.
1615 S. CONGRESS AVE, SUITE 201,
DELRAY BEACH, FL 33445
PHONE: 561–330–2345 FAX: 561–863–8175
WWW.KIMLEY–HORN.COM REGISTRY 696

LICENSED PROFESSIONAL
MICHAEL D. SPRUCE, P.E.
FLORIDA LICENSE NUMBER
52776
DATE: _____


KHA PROJECT 149658011
DATE JAN 2021
SCALE AS SHOWN
DESIGNED BY YXY
DRAWN BY YXY
CHECKED BY MDS

FONTANA TOWNHOMES
PREPARED FOR
MERITAGE HOMES
VILLAGE OF PALM SPRINGS FLORIDA

COVER SHEET

SHEET NUMBER
C0.00


Plotted By: YL Yonai Sheet Set: FONTANA TOWNHOMES Layout: C0.00_COVER SHEET January 15, 2021 10:23:22am K:\bcd_civil\149658011 – davis road\CADD\plansheets\C0.00_COVER SHEET.dwg
This document, together with the concepts and designs presented herein, as an instrument of service, is intended only for the specific purpose and client for which it was prepared. Reuse of and improper reliance on this document without written authorization and adaptation by Kimley–Horn and Associates, Inc. shall be without liability to Kimley–Horn and Associates, Inc.

## GENERAL CONSTRUCTION NOTES

1. THE CONTRACTOR AND SUBCONTRACTORS SHALL OBTAIN A COPY OF THE FLORIDA DEPARTMENT OF TRANSPORTATION "STANDARD SPECIFICATIONS FOR ROAD AND BRIDGE CONSTRUCTION" (LATEST EDITION), AND BECOME FAMILIAR WITH THE CONTENTS PRIOR TO COMMENCING WORK.
2. THE CONTRACTOR SHALL BE RESPONSIBLE FOR FURNISHING ALL MATERIAL AND LABOR TO CONSTRUCT THE FACILITY AS SHOWN AND DESCRIBED IN THE CONSTRUCTION DOCUMENTS IN ACCORDANCE WITH THE APPROPRIATE APPROVING AUTHORITIES, SPECIFICATIONS AND REQUIREMENTS. CONTRACTOR SHALL CLEAR AND GRUB ALL AREAS UNLESS OTHERWISE INDICATED, REMOVING TREES, STUMPS, ROOTS, MUCK, EXISTING PAVEMENT AND ALL OTHER DELETERIOUS MATERIAL.
3. IT IS THE CONTRACTOR'S RESPONSIBILITY TO CONTACT THE VARIOUS UTILITY COMPANIES WHICH MAY HAVE BURIED OR AERIAL UTILITIES WITHIN OR NEAR THE CONSTRUCTION AREA BEFORE COMMENCING WORK. THE CONTRACTOR SHALL PROVIDE 2 WORKING DAYS MINIMUM NOTICE TO ALL UTILITY COMPANIES PRIOR TO BEGINNING CONSTRUCTION. THE CONTRACTOR MUST CALL THE UTILITY COMPANIES BEFORE COMMENCING WORK.
4. THE CONTRACTOR SHALL BE RESPONSIBLE FOR OBTAINING ALL REQUIRED CONSTRUCTION PERMITS AND BONDS IF REQUIRED PRIOR TO CONSTRUCTION.
5. THE CONTRACTOR SHALL HAVE AVAILABLE AT THE JOB SITE AT ALL TIMES ONE COPY OF THE CONSTRUCTION DOCUMENTS INCLUDING PLANS, SPECIFICATIONS, AND SPECIAL CONDITIONS AND COPIES OF ANY REQUIRED CONSTRUCTION PERMITS.
6. ANY DISCREPANCIES ON THE DRAWINGS SHALL BE IMMEDIATELY BROUGHT TO THE ATTENTION OF THE OWNER AND ENGINEER BEFORE COMMENCING WORK. NO FIELD CHANGES OR DEVIATIONS FROM DESIGN ARE TO BE MADE WITHOUT PRIOR APPROVAL OF THE OWNER AND THE ENGINEER.
7. ALL COPIES OF COMPACTION, CONCRETE AND OTHER REQUIRED TEST RESULTS ARE TO BE SENT TO THE OWNER AND ENGINEER DIRECTLY FROM THE TESTING AGENCY.
8. THE CONTRACTOR SHALL BE RESPONSIBLE FOR SUBMITTING TO THE ENGINEER A CERTIFIED RECORD SURVEY SIGNED AND SEALED BY A PROFESSIONAL LAND SURVEYOR REGISTERED IN THE STATE OF FLORIDA DEPICTING THE ACTUAL FIELD LOCATION OF ALL CONSTRUCTED IMPROVEMENTS THAT ARE REQUIRED BY THE JURISDICTIONAL AGENCIES FOR THE CERTIFICATION PROCESS. ALL SURVEY COSTS WILL BE THE CONTRACTOR'S RESPONSIBILITY.
9. THE CONTRACTOR SHALL BE RESPONSIBLE FOR DOCUMENTING AND MAINTAINING AS-BUILT INFORMATION WHICH SHALL BE RECORDED AS CONSTRUCTION PROGRESSES OR AT THE COMPLETION OF APPROPRIATE CONSTRUCTION INTERVALS AND SHALL BE RESPONSIBLE FOR PROVIDING AS-BUILT DRAWINGS TO THE OWNER FOR THE PURPOSE OF CERTIFICATION TO JURISDICTIONAL AGENCIES AS REQUIRED. ALL AS-BUILT DATA SHALL BE COLLECTED BY A STATE OF FLORIDA PROFESSIONAL LAND SURVEYOR WHOSE SERVICES ARE ENGAGED BY THE CONTRACTOR.
10. THE CONTRACTOR SHALL BE RESPONSIBLE FOR VERIFYING THAT THE PROPOSED IMPROVEMENTS SHOWN ON THE PLANS DO NOT CONFLICT WITH ANY KNOWN EXISTING OR OTHER PROPOSED IMPROVEMENTS. IF ANY CONFLICTS ARE DISCOVERED, THE CONTRACTOR SHALL NOTIFY THE OWNER PRIOR TO INSTALLATION OF ANY PORTION OF THE SITE WORK THAT WOULD BE AFFECTED. FAILURE TO NOTIFY OWNER OF AN IDENTIFIABLE CONFLICT PRIOR TO PROCEEDING WITH INSTALLATION RELIEVES OWNER OF ANY OBLIGATION TO PAY FOR A RELATED CHANGE ORDER.
11. CONTRACTOR SHALL BE SOLELY RESPONSIBLE FOR VERIFYING ALL QUANTITIES, TAKE-OFF MEASUREMENTS, MATERIALS, ETC. DURING THE BID PROCESS WHEN DISCREPANCIES OCCUR, THE PHYSICAL PLAN TAKES PRECEDENCE. THE ENGINEER, LANDSCAPE ARCHITECT, COUNTY, CITY OR PROJECT MANAGERS ARE NOT TO BE HELD RESPONSIBLE FOR DISCREPANCIES TO THE SPECIFICATIONS OR PLANS.
12. THE CONTRACTOR SHALL LIMIT CONSTRUCTION OPERATIONS TO WITHIN THE LIMITS OF CONSTRUCTION. THE CONTRACTOR IS SOLELY RESPONSIBLE FOR ANY DAMAGES OUTSIDE THE LIMITS OF CONSTRUCTION.
13. CONTRACTOR IS ADVISED THAT THE U.S. ENVIRONMENTAL PROTECTION AGENCY REQUIRES THAT ALL OPERATORS FILE A NOTICE OF INTENT (NOI) FOR STORMWATER DISCHARGES ASSOCIATED WITH CONSTRUCTION ACTIVITY UNDER THE NPDES GENERAL PERMIT PRIOR TO BEGINNING WORK. IT IS THE CONTRACTOR'S SOLE RESPONSIBILITY TO OBTAIN THE SAME. A COPY SHALL BE SENT TO THE ENGINEER OF RECORD, ARCHITECT OF RECORD AND THE OWNER.
14. FLORIDA LAW (F.S. 553.851) PROTECTION OF UNDERGROUND PIPELINES MANDATES THAT NO EXCAVATOR SHALL COMMENCE OR PERFORM ANY EXCAVATION WITHOUT FIRST OBTAINING INFORMATION CONCERNING THE POSSIBLE LOCATION OF GAS PIPELINES IN THE AREA OF PROPOSED EXCAVATION. THE EXCAVATOR MUST NOTIFY THE GAS UTILITY A MINIMUM OF 2 WORKING DAYS AND A MAXIMUM OF 5 WORKING DAYS PRIOR TO EXCAVATION.
15. THE CONTRACTOR SHALL BE RESPONSIBLE TO COORDINATE WITH THE LOCAL ELECTRICAL PROVIDER ON ANY WORK IN THE VICINITY OF OVERHEAD OR UNDERGROUND POWER LINES.
16. CONTRACTOR SHALL BE RESPONSIBLE FOR REVIEWING ALL PLANS RELATED TO SITE WORK INCLUDING (BUT NOT LIMITED TO) LANDSCAPE, IRRIGATION, SITE LIGHTING, BUILDING FOUNDATION, PLUMBING, FIRE SPRINKLER, AND OTHER APPLICABLE PLANS FOR CONFLICTING INFORMATION AND ALERT OWNER'S REPRESENTATIVE OF ANY CONFLICT FOR RESOLUTION.
17. CONTRACTOR SHALL VERIFY LOCATION OF ALL IRRIGATION, STREET LIGHTING, AND ELECTRICAL CONDUIT THAT WILL BE IN CONFLICT WITH ANY PROPOSED CONSTRUCTION AND SHALL RESOLVE CONFLICT ACCORDINGLY. COST OF CONFLICT RESOLUTION SHALL BE INCLUDED IN THE BID.
18. ANY DEBRIS RESULTING FROM STRIPPING AND DEMOLITION OPERATIONS SHALL BE REMOVED FROM THE SITE AT FREQUENT INTERVALS TO PREVENT THIS MATERIAL FROM ACCUMULATING ON SITE.
19. UPON REMOVAL OF TREES, SHRUBS OR ANY STUMP GRINDING, NO ROOT GREATER THAN THREE INCHES IN DIAMETER SHALL REMAIN WITHIN FIVE FEET OF AN UNDERGROUND STRUCTURE OR UTILITY LINE OR UNDER SLABS OR FOOTINGS OR PAVED AREAS.
20. THE CONTRACTOR SHALL RESTORE ALL DISTURBED VEGETATION IN KIND, UNLESS SHOWN OTHERWISE.
21. THE CONTRACTOR SHALL ENSURE THAT ANY TREE OR SHRUB PLACED WITHIN WATER, SEWER OR DRAINAGE EASEMENTS SHALL CONFORM TO THE VILLAGE OF PALM SPRINGS STANDARD DETAILS

## PRECONSTRUCTION RESPONSIBILITIES

1. UPON RECEIPT OF NOTICE OF AWARD, THE CONTRACTOR SHALL ARRANGE A PRECONSTRUCTION CONFERENCE TO INCLUDE ALL INVOLVED GOVERNMENTAL AGENCIES, ALL AFFECTED UTILITY OWNERS, THE OWNER, THE ENGINEER AND ITSELF.
2. THE CONTRACTOR SHALL CONTACT 'SUNSHINE STATE ONE CALL OF FLORIDA, INC. (811)' AT LEAST 2 WORKING DAYS PRIOR TO BEGINNING ANY EXCAVATION.
3. PRIOR TO BEGINNING CONSTRUCTION, THE CONTRACTOR SHALL VERIFY THE SIZE, LOCATION, ELEVATION, AND MATERIAL OF ALL EXISTING UTILITIES WITHIN THE AREA OF CONSTRUCTION.
4. EXISTING UTILITY LOCATIONS SHOWN ON THESE PLANS ARE APPROXIMATE. THE ENGINEER ASSUMES NO RESPONSIBILITY FOR THE ACCURACY OF EXISTING UTILITIES SHOWN OR FOR ANY EXISTING UTILITIES NOT SHOWN.
5. IF UPON EXCAVATION, AN EXISTING UTILITY IS FOUND TO BE IN CONFLICT WITH THE PROPOSED CONSTRUCTION OR TO BE OF A SIZE OR MATERIAL DIFFERENT FROM THAT SHOWN ON THE PLANS; THE CONTRACTOR SHALL IMMEDIATELY NOTIFY THE ENGINEER.

## CONSTRUCTION SAFETY

ALL CONSTRUCTION SHALL BE DONE IN A SAFE MANNER, SPECIFICALLY, THE RULES AND REGULATIONS OF THE OCCUPATIONAL SAFETY AND HEALTH ADMINISTRATION (OSHA), THE FLORIDA DEPARTMENT OF TRANSPORTATION (FDOT) AND THE MANUAL OF UNIFORM TRAFFIC CONTROL DEVICES (MUTCD) SHALL BE STRICTLY OBSERVED.

## UTILITIES

EXISTING UTILITIES SHOWN ARE LOCATED ACCORDING TO THE INFORMATION AVAILABLE TO THE ENGINEER AT THE TIME OF THE TOPOGRAPHIC SURVEY AND HAVE NOT BEEN INDEPENDENTLY VERIFIED BY THE OWNER OR THE ENGINEER. GUARANTEE IS NOT MADE THAT ALL EXISTING UNDERGROUND UTILITIES ARE SHOWN OR THAT THE LOCATION OF THOSE SHOWN ARE ENTIRELY ACCURATE. FINDING THE ACTUAL LOCATION OF ANY EXISTING UTILITIES IS THE CONTRACTOR'S RESPONSIBILITY AND SHALL BE DONE BEFORE HE COMMENCES ANY WORK IN THE VICINITY. FURTHERMORE, THE CONTRACTOR SHALL BE FULLY RESPONSIBLE FOR ANY AND ALL DAMAGES DUE TO THE CONTRACTOR'S FAILURE TO EXACTLY LOCATE AND PRESERVE ANY AND ALL UNDERGROUND UTILITIES. THE OWNER OR ENGINEER WILL ASSUME NO LIABILITY FOR ANY DAMAGES SUSTAINED OR COST INCURRED BECAUSE OF THE OPERATIONS IN THE VICINITY OF EXISTING UTILITIES OR STRUCTURES, NOR FOR TEMPORARY BRACING AND SHORING OF SAME. IF IT IS NECESSARY TO SHORE, BRACE, SWING OR RELOCATE A UTILITY, THE UTILITY COMPANY OR DEPARTMENT AFFECTED SHALL BE CONTACTED AND THEIR PERMISSION OBTAINED REGARDING THE METHOD TO USE FOR SUCH WORK.

## EROSION CONTROL NOTES

1. THE STORM WATER POLLUTION PREVENTION PLAN ("SWPPP") IS COMPRISED OF THIS EROSION AND SEDIMENTATION CONTROL PLAN, THE STANDARD DETAILS, AND ALL SUBSEQUENT REPORTS AND RELATED DOCUMENTS PROVIDED BY THE CONTRACTOR.
2. ALL CONTRACTORS AND SUBCONTRACTORS INVOLVED WITH STORM WATER POLLUTION PREVENTION SHALL OBTAIN A COPY OF THE STORM WATER POLLUTION PREVENTION PLAN AND THE STATE OF FLORIDA NATIONAL POLLUTANT DISCHARGE ELIMINATION SYSTEM GENERAL PERMIT (NPDES PERMIT) AND BECOME FAMILIAR WITH THEIR CONTENTS.
3. THE CONTRACTOR SHALL IMPLEMENT BEST MANAGEMENT PRACTICES AS REQUIRED BY THE SWPPP. ADDITIONAL BEST MANAGEMENT PRACTICES SHALL BE IMPLEMENTED AS DICTATED BY CONDITIONS AT NO ADDITIONAL COST TO THE OWNER THROUGHOUT ALL PHASES OF CONSTRUCTION.
4. BEST MANAGEMENT PRACTICES (BMP'S) AND CONTROLS SHALL CONFORM TO FEDERAL, STATE, OR LOCAL REQUIREMENTS OR MANUAL OF PRACTICE, AS APPLICABLE. THE CONTRACTOR SHALL IMPLEMENT ADDITIONAL CONTROLS AS DIRECTED BY THE PERMITTING AGENCY OR OWNER.
5. EROSION AND SEDIMENTATION CONTROL PLAN MUST CLEARLY DELINEATE ALL STATE WATERS. PERMITS FOR ANY CONSTRUCTION ACTIVITY IMPACTING STATE WATERS OR REGULATED WETLANDS MUST BE MAINTAINED ON SITE AT ALL TIMES.
6. THE CONTRACTOR SHALL MINIMIZE CLEARING TO THE MAXIMUM EXTENT PRACTICAL OR AS REQUIRED BY THE GENERAL PERMIT.
7. CONTRACTOR SHALL DENOTE ON PLAN THE TEMPORARY PARKING AND STORAGE AREA WHICH SHALL ALSO BE USED AS THE EQUIPMENT MAINTENANCE AND CLEANING AREA, EMPLOYEE PARKING AREA, AND AREA FOR LOCATING PORTABLE FACILITIES, OFFICE TRAILERS, AND TOILET FACILITIES.
8. ALL WASH WATER (CONCRETE TRUCKS, VEHICLE CLEANING, EQUIPMENT CLEANING, ETC.) SHALL BE DETAINED AND PROPERLY TREATED OR DISPOSED.
9. SUFFICIENT OIL AND GREASE ABSORBING MATERIALS AND FLOTATION BOOMS SHALL BE MAINTAINED ON SITE OR READILY AVAILABLE TO CONTAIN AND CLEAN-UP FUEL OR CHEMICAL SPILLS AND LEAKS.
10. RUBBISH, TRASH, GARBAGE, LITTER, OR OTHER SUCH MATERIALS SHALL BE DEPOSITED INTO SEALED CONTAINERS. MATERIALS SHALL BE PREVENTED FROM LEAVING THE PREMISES THROUGH THE ACTION OF WIND OR STORM WATER DISCHARGE INTO DRAINAGE DITCHES OR WATERS OF THE STATE.
11. ALL STORM WATER POLLUTION PREVENTION MEASURES PRESENTED ON THE PLAN, SHALL BE INITIATED AS SOON AS PRACTICABLE.
12. STABILIZATION PRACTICES SHOULD BE INITIATED AS SOON AS PRACTICAL, BUT IN NO CASE MORE THAN 7 DAYS WHERE CONSTRUCTION HAS TEMPORARILY OR PERMANENTLY CEASED.
13. DISTURBED PORTIONS OF THE SITE WHERE CONSTRUCTION ACTIVITY HAS PERMANENTLY STOPPED SHALL BE PERMANENTLY STABILIZED. THESE AREAS SHALL BE STABILIZED NO LATER THAN 7 DAYS AFTER THE LAST CONSTRUCTION ACTIVITY OCCURRED.
14. IF THE ACTION OF VEHICLES TRAVELING OVER THE GRAVEL CONSTRUCTION ENTRANCES IS NOT SUFFICIENT TO REMOVE THE MAJORITY OF DIRT OR MUD, THEN THE TIRES MUST BE WASHED BEFORE THE VEHICLES ENTER A PUBLIC ROAD. IF WASHING IS USED, PROVISIONS MUST BE MADE TO INTERCEPT THE WASH WATER AND TRAP THE SEDIMENT BEFORE IT IS CARRIED OFF THE SITE.
15. ALL MATERIALS SPILLED, DROPPED, WASHED, OR TRACKED FROM VEHICLES ONTO ROADWAYS OR INTO STORM DRAINS MUST BE REMOVED AS SOON AS POSSIBLE.
16. THE CONTRACTOR SHALL BE RESPONSIBLE FOR REMOVING SEDIMENT IN THE DETENTION POND AND ANY SEDIMENT THAT MAY HAVE COLLECTED IN THE STORM SEWER DRAINAGE SYSTEMS IN CONJUNCTION WITH THE STABILIZATION OF THE SITE.
17. ON-SITE & OFF-SITE SOIL STOCKPILE AND BORROW AREAS SHALL BE PROTECTED FROM EROSION AND SEDIMENTATION THROUGH IMPLEMENTATION OF BEST MANAGEMENT PRACTICES. STOCKPILE AND BORROW AREA LOCATIONS SHALL BE NOTED ON THE EROSION AND SEDIMENTATION CONTROL PLAN AND PERMITTED IN ACCORDANCE WITH GENERAL PERMIT REQUIREMENTS.
18. SLOPES SHALL BE LEFT IN A ROUGHENED CONDITION DURING THE GRADING PHASE TO REDUCE RUNOFF VELOCITIES AND EROSION.
19. DUE TO GRADE CHANGES DURING THE DEVELOPMENT OF THE PROJECT, THE CONTRACTOR SHALL BE RESPONSIBLE FOR ADJUSTING THE EROSION CONTROL MEASURES AS NECESSARY AS CONSTRUCTION PROGRESSES (SILT FENCES, ETC.) TO PREVENT EROSION.
20. ALL CONSTRUCTION SHALL BE STABILIZED AT THE END OF EACH WORKING DAY, THIS INCLUDES BACK FILLING OF TRENCHES FOR UTILITY CONSTRUCTION AND PLACEMENT OF GRAVEL OR BITUMINOUS PAVING FOR ROAD CONSTRUCTION.
21. EROSION AND SEDIMENTATION CONTROL PLANS PROVIDED HEREIN ARE A GUIDELINE ONLY. THE CONTRACTOR IS RESPONSIBLE FOR PREPARING THE FINAL STORM WATER POLLUTION PREVENTION PLAN. THE PLAN SHALL BE SUBMITTED TO THE OWNER AND ENGINEER WHICH DEMONSTRATES THE MECHANISMS AND PRACTICES THAT WILL BE EMPLOYED TO PROTECT THE CONSTRUCTION SITE AND SURROUNDING AREA DURING CONSTRUCTION. THE PLAN SHALL BE CONSISTENT WITH FEDERAL NATIONAL POLLUTANT DISCHARGE ELIMINATION SYSTEM (NPDES PERMIT REQUIREMENTS PERTAINING TO POLLUTION PREVENTION PLANS. THE PLAN SHALL INCLUDE, BUT NOT BE LIMITED TO, THE LOCATIONS OF SILT BARRIERS, TURBIDITY SCREENS OR TEMPORARY SHEETING, EMERGENCY RESPONSE PRACTICES, AND OTHER METHODS TO PREVENT POLLUTION. REFUELING OR STORAGE OF VEHICLES OR EQUIPMENT THAT UTILIZE PETROLEUM BASED PRODUCTS SHALL BE PROHIBITED ANYWHERE WITHIN 50 FEET OF A WATER'S EDGE. THE PLAN SHALL BE SUBMITTED TO THE OWNER AFTER NOTICE OF AWARD AND PRIOR TO NOTICE TO PROCEED. AFTER REVIEW BY OWNER THE PLAN SHALL BE FILED WITH ALL APPLICABLE REGULATORY AGENCIES BY THE CONTRACTOR. REFER TO FURTHER NOTES AND DETAILS WITHIN THESE DOCUMENTS.
22. SILT FENCE IS REQUIRED AS SHOWN ON THE PLANS AND ANYWHERE ADDITIONAL AS REQUIRED BY CONSTRUCTION. SILT FENCE IS NOT APPLICABLE IN PAVEMENT AREAS. LIMITS OF CONSTRUCTION SHOWN ARE DIAGRAMATIC. CONTRACTOR TO PROVIDE PLAN FOR SHOP DRAWING REVIEW.
23. THE CONTRACTOR SHALL BE RESPONSIBLE FOR THE CONTROL OF DUST AND DIRT RISING AND SCATTERING IN THE AIR DURING CONSTRUCTION AND SHALL PROVIDE WATER SPRINKLING OR OTHER SUITABLE METHODS OF CONTROL. THE USE OF MOTOR OILS AND OTHER PETROLEUM BASED OR TOXIC LIQUIDS FOR DUST SUPPRESSION OPERATIONS IS PROHIBITED. THE CONTRACTOR SHALL COMPLY WITH ALL GOVERNING REGULATIONS PERTAINING TO ENVIRONMENTAL PROTECTION.

## DEMOLITION NOTES

1. ALL MATERIAL REMOVED FROM THIS SITE BY THE CONTRACTOR SHALL BE DISPOSED OF BY THE CONTRACTOR IN A LEGAL MANNER.
2. REFER TO THE TOPOGRAPHIC SURVEY FOR ADDITIONAL DETAILS OF EXISTING STRUCTURES, ETC., LOCATED WITHIN THE PROJECT SITE. UNLESS OTHERWISE NOTED, ALL EXISTING BUILDINGS, STRUCTURES, SLABS, CONCRETE, ASPHALT, DEBRIS PILES, SIGNS, AND ALL APPURTENANCES ARE TO BE REMOVED FROM THE SITE BY THE CONTRACTOR AND PROPERLY DISPOSED OF IN A LEGAL MANNER AS PART OF THIS CONTRACT. SOME ITEMS TO BE REMOVED MAY NOT BE DEPICTED ON THE TOPOGRAPHIC SURVEY. IT IS THE CONTRACTOR'S RESPONSIBILITY TO VISIT THE SITE AND DETERMINE THE FULL EXTENT OF ITEMS TO BE REMOVED. IF ANY ITEMS ARE IN QUESTION, THE CONTRACTOR SHALL CONTACT THE OWNER PRIOR TO REMOVAL OF SAID ITEMS.
3. THE CONTRACTOR SHALL REFER TO THE DEMOLITION PLAN AND LANDSCAPE PLAN FOR DEMOLITION/PRESERVATION OF EXISTING TREES. ALL TREES NOT SPECIFICALLY SHOWN TO BE REMOVED OR RELOCATED SHALL BE PRESERVED AS A PART OF THIS CONTRACT. TREE PROTECTION FENCING SHALL BE INSTALLED PRIOR TO ANY DEMOLITION. CONTRACTOR TO SEE LANDSCAPE PLAN FOR TREE PROTECTION REQUIREMENTS. ALL TREES TO REMAIN UNLESS OTHERWISE NOTED. CONTRACTOR TO NOTE EXISTING TREES TO REMAIN. SHOULD ANY TREE TO BE REMAIN BE DAMAGED BY THE CONTRACTOR, IT WILL REQUIRE REPLACEMENT IN KIND.

## MAINTENANCE

1. ALL MEASURES STATED ON THE EROSION AND SEDIMENT CONTROL PLAN, AND IN THE STORM WATER POLLUTION PREVENTION PLAN, SHALL BE MAINTAINED IN FULLY FUNCTIONAL CONDITION UNTIL NO LONGER REQUIRED FOR A COMPLETED PHASE OF WORK OR FINAL STABILIZATION OF THE SITE. ALL EROSION AND SEDIMENTATION CONTROL MEASURES SHALL BE CHECKED BY A QUALIFIED PERSON AT LEAST ONCE EVERY SEVEN CALENDAR DAYS AND WITHIN 24 HOURS OF THE END OF A 0.5" RAINFALL EVENT, AND CLEANED AND REPAIRED IN ACCORDANCE WITH THE FOLLOWING:
2. INLET PROTECTION DEVICES AND BARRIERS SHALL BE REPAIRED OR REPLACED IF THEY SHOW SIGNS OF UNDERMINING, OR DETERIORATION. INLET PROTECTION DEVICES SHALL BE CLEANED OUT AT REGULAR INTERVALS OR AS THEY BECOME FULL OF DEBRIS.
3. ALL SEEDED AREAS SHALL BE CHECKED REGULARLY TO SEE THAT A GOOD STAND IS MAINTAINED. AREAS SHOULD BE FERTILIZED, WATERED AND RESEEDED AS NEEDED.
4. SILT FENCES SHALL BE REPAIRED TO THEIR ORIGINAL CONDITIONS IF DAMAGED. SEDIMENT SHALL BE REMOVED FROM THE SILT FENCES WHEN IT REACHES ONE-HALF THE HEIGHT OF THE SILT FENCE.
5. THE CONSTRUCTION ENTRANCES SHALL BE MAINTAINED IN A CONDITION WHICH WILL PREVENT TRACKING OR FLOW OF MUD ONTO PUBLIC RIGHTS-OF-WAY. THIS MAY REQUIRE PERIODIC TOP DRESSING OF THE CONSTRUCTION ENTRANCES AS CONDITIONS DEMAND.
6. ALL MAINTENANCE OPERATIONS SHALL BE DONE IN A TIMELY MANNER BUT IN NO CASE LATER THAN 2 CALENDAR DAYS FOLLOWING THE INSPECTION.

## INTERRUPTION OF EXISTING UTILITIES

ANY CONSTRUCTION WORK THAT REQUIRES INTERRUPTION OF SERVICE TO ANY CUSTOMER SHALL BE DONE SO WITH A MINIMUM OF SEVENTY-TWO (72) HOUR NOTICE TO, AND WRITTEN APPROVAL BY THE APPROPRIATE UTILITY COMPANY. THE CONTRACTOR SHALL ARRANGE A MEETING WITH THE LOCAL JURISDICTIONAL AGENCIES AND OTHER GOVERNING AGENCIES, AND OTHER AFFECTED UTILITIES PRIOR TO SCHEDULING THE SHUTDOWN TO ASSESS THE SCOPE OF WORK. ALL SYSTEM SHUT DOWNS SHALL BE SCHEDULED BY THE CONTRACTOR AT SUCH TIME THAT SYSTEM DEMAND IS LOW. THIS GENERALLY REQUIRES NIGHT TIME WORK BY THE CONTRACTOR AND REQUIRES FULL TIME INSPECTION BY A REPRESENTATIVE OF THE UTILITY. ALL COST FOR OVERTIME WORK BY THE REPRESENTATIVE OF THE UTILITY SHALL BE BORNE BY THE CONTRACTOR. EACH CUSTOMER AFFECTED BY THE SHUT DOWN SHALL BE PROVIDED, MINIMUM, FORTY-EIGHT (48) HOURS WRITTEN NOTIFICATION BY THE CONTRACTOR.

## PAVING, GRADING AND DRAINAGE NOTES

1. ALL PAVING, CONSTRUCTION, MATERIALS, AND WORKMANSHIP WITHIN PUBLIC RIGHT-OF-WAY SHALL BE IN ACCORDANCE WITH LOCAL COUNTY OR STATE SPECIFICATIONS AND STANDARDS (LATEST EDITION) OR FDOT STANDARDS AND SPECIFICATIONS (LATEST EDITION) IF NOT COVERED BY LOCAL OR COUNTY REGULATIONS, WHICHEVER IS MOST RESTRICTIVE.
2. ALL UNPAVED AREAS DISTURBED BY CONSTRUCTION SHALL BE REGRADED AND SODDED, UNLESS OTHERWISE NOTED.
3. TRAFFIC CONTROL ON ALL FDOT, LOCAL AND COUNTY RIGHTS-OF-WAY SHALL MEET THE REQUIREMENTS OF THE MANUAL OF UNIFORM TRAFFIC CONTROL DEVICES (U.S. DOT/FHA) AND THE REQUIREMENTS OF THE STATE AND ANY LOCAL AGENCY HAVING JURISDICTION. IN THE EVENT THAT THE CONTRACT DOCUMENTS AND THE JURISDICTIONAL AGENCY REQUIREMENTS ARE NOT IN AGREEMENT, THE MOST STRINGENT SHALL GOVERN.
4. THE CONTRACTOR SHALL GRADE THE SITE TO THE ELEVATIONS INDICATED AND SHALL REGRADE WASHOUTS WHERE THEY OCCUR AFTER EVERY RAINFALL UNTIL A GRASS STAND IS WELL ESTABLISHED OR ADEQUATE STABILIZATION OCCURS.
5. ALL OPEN AREAS WITHIN THE PROJECT SITE SHALL BE SODDED WITH BAHIA SOD UNLESS INDICATED OTHERWISE ON THE ENGINEERING OR LANDSCAPE PLANS.
6. ALL AREAS INDICATED AS PAVEMENT SHALL BE CONSTRUCTED IN ACCORDANCE WITH THE TYPICAL PAVEMENT SECTIONS AS INDICATED ON THE DRAWINGS.
7. WHERE EXISTING PAVEMENT IS INDICATED TO BE REMOVED AND REPLACED, THE CONTRACTOR SHALL SAW CUT A MINIMUM 2" DEEP FOR A SMOOTH AND STRAIGHT JOINT AND REPLACE THE PAVEMENT WITH THE SAME TYPE AND DEPTH OF MATERIAL AS EXISTING OR AS INDICATED.
8. WHERE NEW PAVEMENT MEETS THE EXISTING PAVEMENT, THE CONTRACTOR SHALL SAW CUT THE EXISTING PAVEMENT A MINIMUM 2" DEEP FOR A SMOOTH AND STRAIGHT JOINT AND MATCH THE EXISTING PAVEMENT ELEVATION WITH THE PROPOSED PAVEMENT UNLESS OTHERWISE INDICATED.
9. THE CONTRACTOR SHALL INSTALL FILTER FABRIC OVER ALL DRAINAGE STRUCTURES FOR THE DURATION OF CONSTRUCTION AND UNTIL ACCEPTANCE OF THE PROJECT BY THE OWNER. ALL DRAINAGE STRUCTURES AND PIPES WITHIN THE LIMITS OF CONSTRUCTION SHALL BE CLEANED OF DEBRIS AS REQUIRED DURING AND AT THE END OF CONSTRUCTION TO PROVIDE POSITIVE DRAINAGE FLOWS.
10. IF DEWATERING IS REQUIRED, THE CONTRACTOR SHALL OBTAIN ANY APPLICABLE REQUIRED PERMITS. THE CONTRACTOR IS TO COORDINATE WITH THE OWNER AND THE ENGINEER PRIOR TO ANY EXCAVATION.
11. CONTRACTOR TO STRIP TOPSOIL AND ORGANIC MATTER FROM ALL AREAS OF THE SITE AS REQUIRED. IN SOME CASES TOPSOIL MAY BE STOCKPILED ON SITE FOR PLACEMENT WITHIN LANDSCAPED AREAS BUT ONLY AS DIRECTED BY THE OWNER.
12. FIELD DENSITY TESTS SHALL BE TAKEN AT INTERVALS IN ACCORDANCE WITH THE LOCAL JURISDICTIONAL AGENCY OR TO FDOT STANDARDS. IN THE EVENT THAT THE CONTRACT DOCUMENTS AND THE JURISDICTIONAL AGENCY REQUIREMENTS ARE NOT IN AGREEMENT, THE MOST STRINGENT SHALL GOVERN.
13. ALL SLOPES AND AREAS DISTURBED BY CONSTRUCTION SHALL BE GRADED AS PER PLANS. THE AREAS SHALL THEN BE SODDED AS SPECIFIED IN THE PLANS, FERTILIZED, MULCHED, WATERED, AND MAINTAINED UNTIL A GOOD STAND OF GRASS GROWTH IS ESTABLISHED IN ALL AREAS. ANY AREAS DISTURBED FOR ANY REASON PRIOR TO FINAL ACCEPTANCE OF THE JOB SHALL BE CORRECTED BY THE CONTRACTOR AT NO ADDITIONAL COST TO THE OWNER.
14. ALL CUT OR FILL SLOPES SHALL BE 4 (HORIZONTAL) :1 (VERTICAL) OR FLATTER UNLESS OTHERWISE SHOWN.
15. THE CONTRACTOR SHALL ENSURE THAT ISLAND PLANTING AREAS AND OTHER PLANTING AREAS ARE NOT COMPACTED AND DO NOT CONTAIN ROAD BASE MATERIALS. THE CONTRACTOR SHALL ALSO EXCAVATE AND REMOVE ALL UNDESIRABLE MATERIAL FROM ALL AREAS ON THE SITE TO BE PLANTED AND PROPERLY DISPOSED OF IN A LEGAL MANNER.

## WATER AND SEWER UTILITY NOTES

1. ALL CONSTRUCTION SHALL MEET OR EXCEED THE LOCAL WATER AND SEWER REQUIREMENTS AND THE FLORIDA DEPARTMENT OF ENVIRONMENTAL PROTECTION REQUIREMENTS UNLESS OTHERWISE NOTED. IT IS THE CONTRACTOR'S RESPONSIBILITY TO OBTAIN THE SPECIFICATIONS AND DETAILS FROM THE LOCAL AGENCY.
2. THE CONTRACTOR SHALL CONSTRUCT GRAVITY SEWER LATERALS, MANHOLES AND GRAVITY SEWER LINES AS SHOWN ON THESE PLANS. THE CONTRACTOR SHALL FURNISH ALL NECESSARY MATERIALS, EQUIPMENT, MACHINERY, TOOLS, MEANS OF TRANSPORTATION AND LABOR NECESSARY TO COMPLETE THE WORK IN FULL AND COMPLETE ACCORDANCE WITH THE SHOWN, DESCRIBED AND REASONABLY INTENDED REQUIREMENTS OF THE CONTRACT DOCUMENTS AND JURISDICTIONAL AGENCY REQUIREMENTS. IN THE EVENT THAT THE CONTRACT DOCUMENTS AND THE JURISDICTIONAL AGENCY REQUIREMENTS ARE NOT IN AGREEMENT, THE MOST STRINGENT SHALL GOVERN.
3. EXISTING UTILITIES SHOWN ARE LOCATED ACCORDING TO THE INFORMATION AVAILABLE TO THE ENGINEER AT THE TIME OF THE TOPOGRAPHIC SURVEY AND HAVE NOT BEEN INDEPENDENTLY VERIFIED BY THE OWNER OR THE ENGINEER. GUARANTEE IS NOT MADE THAT ALL EXISTING UNDERGROUND UTILITIES ARE SHOWN OR THAT THE LOCATION OF THOSE SHOWN ARE ENTIRELY ACCURATE. FINDING THE ACTUAL LOCATION OF ANY EXISTING UTILITIES IS THE CONTRACTOR'S RESPONSIBILITY AND SHALL BE DONE BEFORE HE COMMENCES ANY WORK IN THE VICINITY. FURTHERMORE, THE CONTRACTOR SHALL BE FULLY RESPONSIBLE FOR ANY AND ALL DAMAGES DUE TO THE CONTRACTOR'S FAILURE TO EXACTLY LOCATE AND PRESERVE ANY AND ALL UNDERGROUND UTILITIES. THE OWNER OR ENGINEER WILL ASSUME NO LIABILITY FOR ANY DAMAGES SUSTAINED OR COST INCURRED BECAUSE OF THE OPERATIONS IN THE VICINITY OF EXISTING UTILITIES OR STRUCTURES, NOR FOR TEMPORARY BRACING AND SHORING OF SAME. IF IT IS NECESSARY TO SHORE, BRACE, SWING OR RELOCATE A UTILITY, THE UTILITY COMPANY OR DEPARTMENT AFFECTED SHALL BE CONTACTED AND THEIR PERMISSION OBTAINED REGARDING THE METHOD TO USE FOR SUCH WORK.
4. DEFLECTION OF PIPE JOINTS AND CURVATURE OF PIPE SHALL NOT EXCEED THE MANUFACTURER'S SPECIFICATIONS. SECURELY CLOSE ALL OPEN ENDS OF PIPE AND FITTINGS WITH A WATERTIGHT PLUG WHEN WORK IS NOT IN PROGRESS. THE INTERIOR OF ALL PIPES SHALL BE CLEAN AND JOINT SURFACES WIPED CLEAN AND DRY AFTER THE PIPE HAS BEEN LOWERED INTO THE TRENCH. VALVES SHALL BE PLUMB AND LOCATED ACCORDING TO THE PLANS.
5. ALL PHASES OF INSTALLATION, INCLUDING UNLOADING, TRENCHING, LAYING AND BACK FILLING, SHALL BE DONE IN A FIRST CLASS WORKMANLIKE MANNER. ALL PIPE AND FITTINGS SHALL BE CAREFULLY STORED FOLLOWING MANUFACTURER'S RECOMMENDATIONS. CARE SHALL BE TAKEN TO AVOID DAMAGE TO THE COATING OR LINING OF ANY D.I. PIPE FITTINGS. ANY PIPE OR FITTING WHICH IS DAMAGED OR WHICH HAS FLAWS OR IMPERF

## TRENCH SAFETY ACT

1. CONTRACTOR SHALL BE SOLELY RESPONSIBLE FOR COMPLIANCE WITH THE STATE OF FLORIDA TRENCH SAFETY ACT.
2. WHERE EXCAVATIONS TO A DEPTH IN EXCESS OF FIVE FEET (5') ARE REQUIRED. THE CONTRACTOR SHALL INCLUDE THE FOLLOWING INFORMATION IN THE BID:
   A. A REFERENCE TO THE TRENCH SAFETY STANDARDS THAT WILL BE IN EFFECT DURING THE PERIOD OF CONSTRUCTION OF THE PROJECT.
   B. WRITTEN ASSURANCES BY THE CONTRACTOR PERFORMING THE TRENCH EXACTION THAT SUCH CONTRACTOR WILL COMPLY WITH THE APPLICABLE TRENCH SAFETY STANDARDS.
   C. A SEPARATE ITEM IDENTIFYING THE COST OF COMPLIANCE WITH THE APPLICABLE TRENCH SAFETY STANDARDS.
3. WHEN A BID IS NOT SUBMITTED, THE CONTRACTOR SHALL SUBMIT THE INFORMATION LISTED IN ITEM "2" TO THE ENGINEER PRIOR TO STARTING WORK.

## SURVEY DATA

1. THE CONTRACTOR SHALL PROTECT ALL PERMANENT REFERENCE MONUMENTS AND TAKE ALL PRECAUTIONS NECESSARY TO AVOID DAMAGE TO SURVEY MAKERS DURING CONSTRUCTION. ANY SURVEY MARKERS DAMAGED DURING CONSTRUCTION WILL BE REPLACED AT THE EXPENSE OF THE CONTRACTOR.
2. BENCHMARK LOCATION AND ELEVATION ARE AS REPRESENTED BY SURVEYOR AT THE TIME OF SURVEY. CONTRACTOR SHALL VERIFY ITS CORRECTNESS AT TIME OF CONSTRUCTION.
3. ALL ELEVATIONS ON THE PLANS OR REFERENCED IN THE SPECIFICATIONS ARE BASED ON NAVD 1988 DATUM.

## MINIMUM REQUIRED AS-BUILT INFORMATION

1. ALL AS-BUILT INFORMATION SUBMITTED TO THE ENGINEER SHALL BE SUFFICIENTLY ACCURATE, CLEAR, AND LEGIBLE TO SATISFY THE ENGINEER THAT THE INFORMATION PROVIDES A TRUE REPRESENTATION OF THE IMPROVEMENTS CONSTRUCTED.
2. STORM DRAINAGE:
   A. TOP ELEVATION OF EACH MANHOLE FRAME AND COVER / GRATE AS WELL ALL OTHER STRUCTURES (HEADWALLS, CONTROL STRUCTURES, ETC.).
   B. INVERT ELEVATION OF EACH LINE ENTERING AND LEAVING EACH STRUCTURE, INCLUDING UNDERDRAIN PIPES.
   C. INVERTS OF ALL MITERED END SECTIONS
   D. ACTUAL GRADE OF PIPE BETWEEN THE STRUCTURES
   E. INVERT ELEVATION AND TWO HORIZONTAL TIES FROM PERMANENT VISIBLE OBJECTS TO ALL STORM STUB-OUTS.
   F. CONTRACTOR SHALL PROVIDE ACCURATE AS-BUILT DIMENSIONS AND ELEVATIONS OF THE STORM WATER MANAGEMENT AREAS IMMEDIATELY AFTER FINAL GRADING AND PRIOR TO SEEDING OR SODDING OF THE SLOPES. AT A MINIMUM, THE CONTRACTOR SHALL PROVIDE CROSS SECTIONS ON ALL SIDES OF THE WATER MANAGEMENT AREAS AT 100-FOOT INTERVALS. THE CROSS SECTIONS SHALL BE PROVIDED FROM TOP OF BANK TO THE SLOPE BREAK BELOW CONTROL ELEVATION THE ENGINEER'S APPROVAL IS REQUIRED PRIOR TO GRASSING OF THE BANK. IF ANY MODIFICATIONS ARE SPECIFIED, ADDITIONAL AS-BUILTS MAY BE REQUIRED.
3. LOCATIONS AND DEPTHS OF UNDERGROUND UTILITIES.
4. REVISIONS TO ROUTING OF PIPING AND CONDUITS.
5. REVISIONS TO ELECTRICAL CIRCUITRY.
6. ACTUAL EQUIPMENT LOCATIONS.
7. CHANGES MADE BY CHANGE ORDER OR CONSTRUCTION CHANGE DIRECTIVE.
8. CHANGES MADE FOLLOWING ENGINEER'S WRITTEN ORDERS.
9. DETAILS NOT ON THE ORIGINAL CONTRACT DRAWINGS.
10. FIELD RECORDS FOR VARIABLE AND CONCEALED CONDITIONS.
11. ALL SLEEVES, FITTINGS, TEES, BENDS, VALVES, ETC. SHALL BE LOCATED BY STATION/OFFSET (OR METHOD APPROVED BY ENGINEER) AND ELEVATION OF TOP OF PIPE FOR ALL CONSTRUCTED SLEEVING. AS-BUILTS FOR ALL SLEEVING DEPICTING TOP OF PIPE AT 100-FOOT INTERVALS MUST BE PROVIDED.
12. RECORD DRAWINGS SHALL INDICATE AS-BUILT DATA FOR EVERY ELEVATION SHOWN ON THE PLANS.
13. IF A NEW BENCHMARK LOCATION IS ESTABLISHED, CONTRACTOR SHALL PROVIDE A BENCH LOOP CLOSURE TO THE CLOSEST EXISTING BENCHMARKS IN BOTH DIRECTIONS. ALL BENCHMARK DATA SHALL BE SUBMITTED BY A REGISTERED LAND SURVEYOR.
14. IDENTIFICATION OF ADDENDUM ITEMS ISSUED DURING BIDDING PERIOD.
15. THE CONTRACTOR IS RESPONSIBLE FOR ENSURING THAT ALL AS-BUILT DATA FOR UTILITIES AND SLEEVING IS COLLECTED PRIOR TO PAVEMENT SECTION CONSTRUCTION. PRELIMINARY UTILITY AS-BUILTS MUST BE PROVIDED TO THE ENGINEER FOR REVIEW PRIOR TO PAVEMENT SECTION CONSTRUCTION.
16. PRESSURE SYSTEMS (WATER):
   A. ACTUAL LENGTHS BETWEEN BRANCHES AND VALVES ALONG THE MAIN RUN.
   B. TOP OF PIPE AND FINISHED GRADE ELEVATIONS AT 100' INTERVALS.
   C. LOCATE WITH MEASUREMENTS FROM PERMANENT VISIBLE OBJECTS ALL FITTINGS/ACCESSORIES NOT VISIBLE FROM THE SURFACE (MINIMUM TWO POINT TIES).
   D. AS-BUILT INFORMATION SUBMITTED TO THE ENGINEER SHALL BE SUFFICIENTLY ACCURATE, CLEAR AND LEGIBLE TO SATISFY THE ENGINEER THAT THE INFORMATION PROVIDES A TRUE REPRESENTATION OF THE IMPROVEMENTS CONSTRUCTED.
   E. ALL AS-BUILT INFORMATION SUBMITTED TO THE ENGINEER SHALL BE SUFFICIENTLY ACCURATE, CLEAR AND LEGIBLE TO SATISFY THE ENGINEER THAT THE INFORMATION PROVIDES A TRUE REPRESENTATION OF THE IMPROVEMENTS CONSTRUCTED.
   F. UPON COMPLETION OF CONSTRUCTION, THE CONTRACTOR SHALL SUBMIT TO THE ENGINEER OF RECORD COMPLETE SETS OF AS-BUILT CONSTRUCTION DRAWINGS AS REQUIRED FOR SUBMITTAL AND APPROVAL. THESE DRAWINGS SHALL BE MARKED TO SHOW "AS-BUILT" CONSTRUCTION CHANGES AND DIMENSIONED LOCATIONS AND ELEVATIONS OF ALL IMPROVEMENTS AND SHALL BE SIGNED AND SEALED BY A FLORIDA REGISTERED LAND SURVEYOR.
   G. ALL OTHER REQUIRED PRESSURE PIPE INFORMATION IN ACCORDANCE WITH THE AS-BUILT REQUIREMENTS OF PALM BEACH COUNTY.
17. UTILITY CROSSING SEPARATION INFORMATION FOR THAT PROVIDED ON THE PLANS VERIFYING:
   A. SIZE AND MATERIAL OF CROSSING PIPES
   B. TOP ELEVATION OF BOTTOM PIPE
   C. BOTTOM ELEVATION OF TOP PIPE
   D. FINISH SURFACE ELEVATION OVER UTILITY CROSSING

| No. | REVISIONS | DATE | BY |
|---|---|---|---|

Kimley»Horn
© 2021 KIMLEY-HORN AND ASSOCIATES, INC.
1615 S. CONGRESS AVE, SUITE 201,
DELRAY BEACH, FL 33445
PHONE: 561-330-2345 FAX: 561-863-8175
WWW.KIMLEY-HORN.COM REGISTRY 696

LICENSED PROFESSIONAL
MICHAEL D. SPRUCE, P.E.
FLORIDA LICENSE NUMBER
52776
DATE: _____

| | | | |
|---|---|---|---|
| KHA PROJECT 149658011 | | DRAWN BY | YXY |
| DATE | JAN 2021 | CHECKED BY | MDS |
| SCALE | AS SHOWN | | |
| DESIGNED BY | YXY | | |

# GENERAL NOTES

FONTANA TOWNHOMES
PREPARED FOR
MERITAGE HOMES
VILLAGE OF PALM SPRINGS FLORIDA

SHEET NUMBER
C1.01

Plotted By: Yomal Sheet Set: FONTANA TOWNHOMES Layout: C1.01 GENERAL NOTES January 15, 2021 10:23:32am K:\bcd_civil\149658011 – davis road\CADD\plansheets\C1.01 GENERAL NOTES.dwg
This document, together with the concepts and designs presented herein, as an instrument of service, is intended only for the specific purpose and client for which it was prepared. Reuse of and improper reliance on this document without written authorization and adaptation by Kimley-Horn and Associates, Inc. shall be without liability to Kimley-Horn and Associates, Inc.

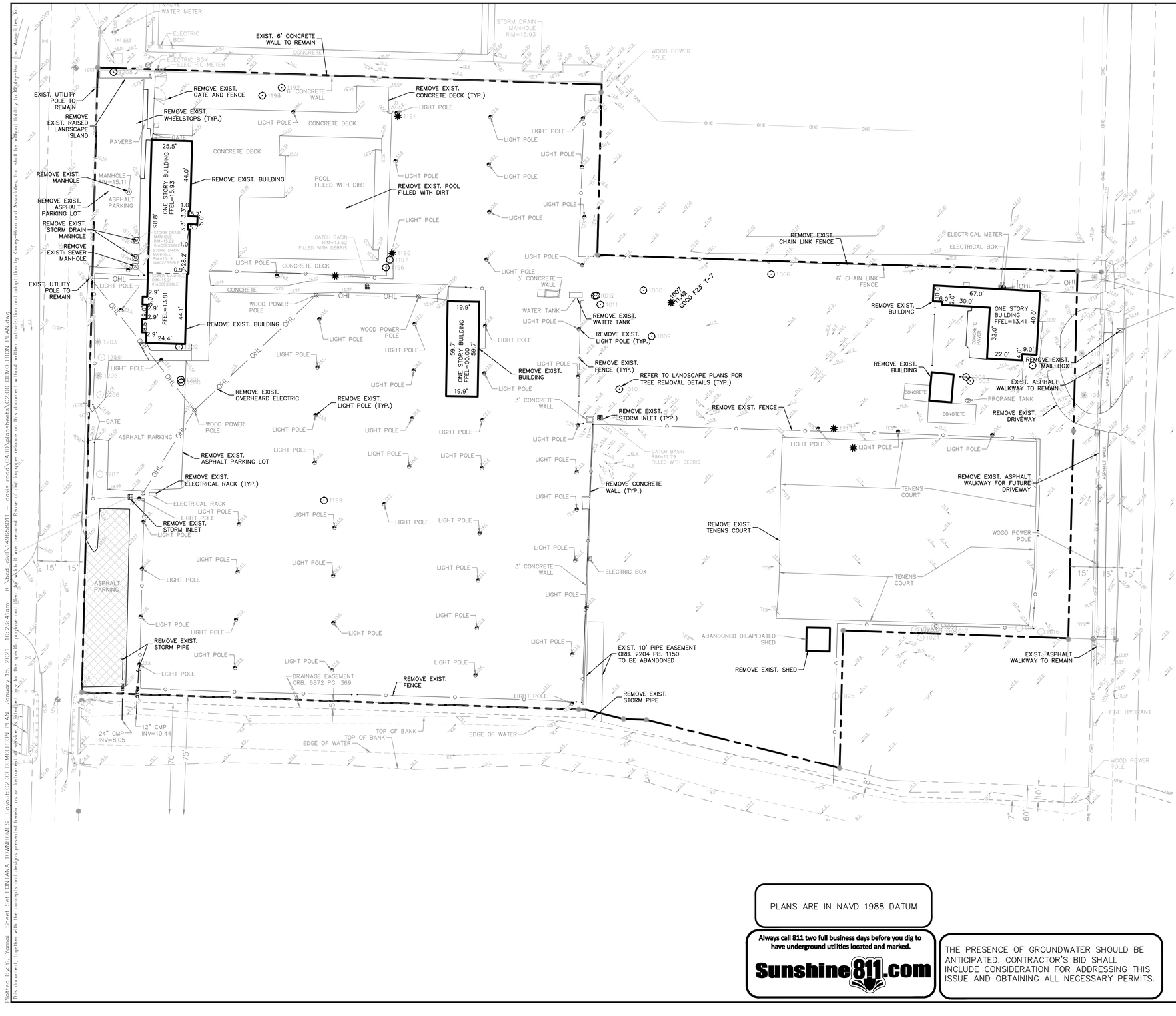


GRAPHIC SCALE IN FEET
0 15 30 60

NORTH

## LEGEND

- PROPERTY LINE
- EXISTING SANITARY LINE
- EXISTING UNDERGROUND ELECTRICAL
- EXISTING WATER
- EXISTING STORM
- EXISTING GAS
- EXISTING TELEPHONE
- EXISTING OVERHEAD ELECTRIC
- EXISTING LANDSCAPE
- EXISTING LIGHT POLES
- EXISTING SEWER TO BE DEMOLISHED
- EXISTING WATER TO BE DEMOLISHED
- EXISTING STORM TO BE DEMOLISHED
- EXISTING U.G. ELECTRICAL TO BE DEMOLISHED
- EXISTING GAS TO BE DEMOLISHED
- EXISTING TELEPHONE TO BE DEMOLISHED
- EXISTING OVERHEAD ELECTRIC TO BE DEMOLISHED
- EXISTING LANDSCAPE TO BE REMOVED (SEE LANDSCAPE PLANS FOR DETAILS)
- EXISTING LIGHT POLES TO BE REMOVED (SEE PHOTOMETRIC PLANS FOR DETAILS)
- REMOVE EXISTING ASPHALT
- 30.00+ EXISTING ELEVATION

## DEMOLITION NOTES

1. ANY ITEMS TO REMAIN THAT ARE DAMAGED BY THE CONTRACTOR SHALL BE REPLACED TO THE EXISTING CONDITION OR BETTER AT THE CONTRACTOR'S EXPENSE.
2. REFER TO LANDSCAPE PLANS FOR TREE REMOVAL, RELOCATION, AND PROTECTION INFORMATION. ANY AREAS FOR LANDSCAPING SHALL HAVE ALL BASE AND SUBGRADE MATERIAL REMOVED TO A DEPTH OF 3 FEET.
3. ALL VALVE BOXES, MANHOLES, CATCH BASINS, AND OTHER ITEMS TO REMAIN SHALL BE ADJUSTED TO PROPOSED GRADE.
4. THE INTENT OF THE DEMOLITION PLAN IS TO DEPICT EXISTING FEATURES THAT ENCUMBER THE PROPOSED CONSTRUCTION AREA AND ARE SCHEDULED FOR REMOVAL. SOME INCIDENTAL ITEMS MAY HAVE BEEN INADVERTENTLY OMITTED FROM THE PLAN. THE CONTRACTOR IS ENCOURAGED TO THOROUGHLY INSPECT THE SITE AS WELL AS REVIEW THE PLANS AND SPECIFICATIONS PRIOR TO SUBMITTING PRICING. CONTRACTOR WILL NOT RECEIVE ADDITIONAL COMPENSATION FOR INCIDENTAL ITEMS NOT SHOWN ON THIS DEMOLITION PLAN.
5. THIS DEMOLITION PLAN IS BASED ON AVAILABLE UTILITY INFORMATION AND MAY OR MAY NOT BE ALL INCLUSIVE FOR THIS SITE. ANY UTILITIES ENCOUNTERED DURING DEMOLITION THAT ARE NOT DEPICTED/ADDRESSED ON THIS DRAWING SHOULD BE BROUGHT TO THE ATTENTION OF THE PROJECT ENGINEER IMMEDIATELY.
6. CONTRACTOR IS REQUIRED TO OBTAIN ALL DEMOLITION AND DEWATERING PERMITS, IF APPLICABLE.
7. ALL FEATURES IDENTIFIED ON THIS PLAN WHICH ARE LISTED TO BE DEMOLISHED ARE TO BE REMOVED FROM THE SITE AND DISPOSED OF IN A LEGAL MANNER.
8. CONTRACTOR SHALL LIMIT ALL DEMOLITION ACTIVITIES TO THOSE AREAS DELINEATED ON THE CONSTRUCTION DRAWINGS UNLESS OTHERWISE DIRECTED BY THE DEVELOPER OR AS REQUIRED FOR CONSTRUCTION OF IMPROVEMENTS.
9. CONTRACTOR IS RESPONSIBLE FOR CONTROLLING AIRBORNE DUST AND POLLUTANTS BY USING WATER SPRINKLING OR OTHER SUITABLE MEANS OF CONTROL.
10. CONTRACTOR TO USE CARE IN HANDLING DEBRIS FROM SITE TO ENSURE THE SAFETY OF THE PUBLIC. HAUL ROUTE TO BE CLOSELY MONITORED FOR DEBRIS OR MATERIALS TRACKED ONTO ADJOINING ROADWAYS, SIDEWALKS, ETC. ROADWAYS AND WALKWAYS TO BE CLEARED DAILY OR AS NECESSARY TO MAINTAIN PUBLIC SAFETY.
11. ALL ASPHALT TO BE REMOVED SHALL BE SAW CUT ADJACENT TO REMAINING IMPROVEMENTS.
12. WHERE REMAINING, INLETS, MANHOLE COVERS, AND VALVE COVERS TO BE PROTECTED IN PAVEMENT REMOVAL AREAS. CONTRACTOR SHALL REPLACE DAMAGED STRUCTURES AT THEIR EXPENSE.
13. CONTRACTOR MUST PROTECT THE PUBLIC AT ALL TIMES WITH FENCING, BARRICADES, ENCLOSURES, ETC. AS APPROVED BY THE VILLAGE OF PALM SPRINGS AND CONSTRUCTION MANAGER.
14. CONTINUOUS ACCESS SHALL BE MAINTAINED FOR SURROUNDING PROPERTIES AT ALL TIMES DURING DEMOLITION OF EXISTING FACILITIES AND CONSTRUCTION OF NEW FACILITIES. SIGNAGE SHALL BE POSTED TO DIRECT THE PUBLIC TO THE PATH OF TRAVEL.
15. REFER TO THE TOPOGRAPHIC SURVEY FOR ADDITIONAL DETAILS OF EXISTING STRUCTURES, ETC., LOCATED WITHIN THE PROJECT SITE. UNLESS OTHERWISE NOTED, ALL EXISTING BUILDINGS, STRUCTURES, SLABS, CONCRETE, ASPHALT, DEBRIS PILES, SIGNS, AND ALL APPURTENANCES ARE TO BE REMOVED FROM THE SITE BY THE CONTRACTOR AND PROPERLY DISPOSED OF IN A LEGAL MANNER AS PART OF THIS CONTRACT. SOME ITEMS TO BE REMOVED MAY NOT BE DEPICTED ON THE TOPOGRAPHIC SURVEY. IT IS THE CONTRACTOR'S RESPONSIBILITY TO VISIT THE SITE AND DETERMINE THE FULL EXTENT OF ITEMS TO BE REMOVED. IF ANY ITEMS ARE IN QUESTION, THE CONTRACTOR SHALL CONTACT THE OWNER PRIOR TO REMOVAL OF SAID ITEMS.
16. ALL TREES NOT SPECIFICALLY SHOWN TO BE PRESERVED OR RELOCATED SHALL BE REMOVED AS A PART OF THIS CONTRACT. TREE PROTECTION FENCING SHALL BE INSTALLED PRIOR TO ANY DEMOLITION.
17. CONTRACTOR SHALL COORDINATE THE LIMITS OF UTILITY DEMOLITION WITH PROPOSED PLANS.

PLANS ARE IN NAVD 1988 DATUM

Always call 811 two full business days before you dig to have underground utilities located and marked.
Sunshine811.com

THE PRESENCE OF GROUNDWATER SHOULD BE ANTICIPATED. CONTRACTOR'S BID SHALL INCLUDE CONSIDERATION FOR ADDRESSING THIS ISSUE AND OBTAINING ALL NECESSARY PERMITS.

| No. | REVISIONS | DATE | BY |
|---|---|---|---|

Kimley»Horn
© 2021 KIMLEY-HORN AND ASSOCIATES, INC.
1615 S. CONGRESS AVE, SUITE 201,
DELRAY BEACH, FL 33445
PHONE: 561-330-2345 FAX: 561-863-8175
WWW.KIMLEY-HORN.COM REGISTRY 696

LICENSED PROFESSIONAL
MICHAEL D. SPRUCE, P.E.
FLORIDA LICENSE NUMBER
52776
DATE: ———

| | | | |
|---|---|---|---|
| KHA PROJECT 149658011 | | PROJECT MANAGER | MDS |
| DATE | JAN. 2021 | QUALITY CONTROL | MDS |
| SCALE | AS SHOWN | DESIGNED BY | YXY |
| | | DRAWN BY | YXY |
| | | CHECKED BY | MDS |

# DEMOLITION PLAN

FONTANA TOWNHOMES
PREPARED FOR
MERITAGE HOMES
VILLAGE OF PALM SPRINGS FLORIDA

SHEET NUMBER
C2.00

Plotted By: Yanoi Sheet Set:FONTANA TOWNHOMES Layout:C2.00 DEMOLITION PLAN January 15, 2021 10:23:41am K:\brd_civil\149658011 – doris root\CADD\plansheets\C2.00 DEMOLITION PLAN.dwg
This document, together with the concepts and designs presented herein, as an instrument of service, is intended only for the specific purpose and client for which it was prepared. Reuse of and improper reliance on this document without written authorization and adaptation by Kimley-Horn and Associates, Inc. shall be without liability to Kimley-Horn and Associates, Inc.

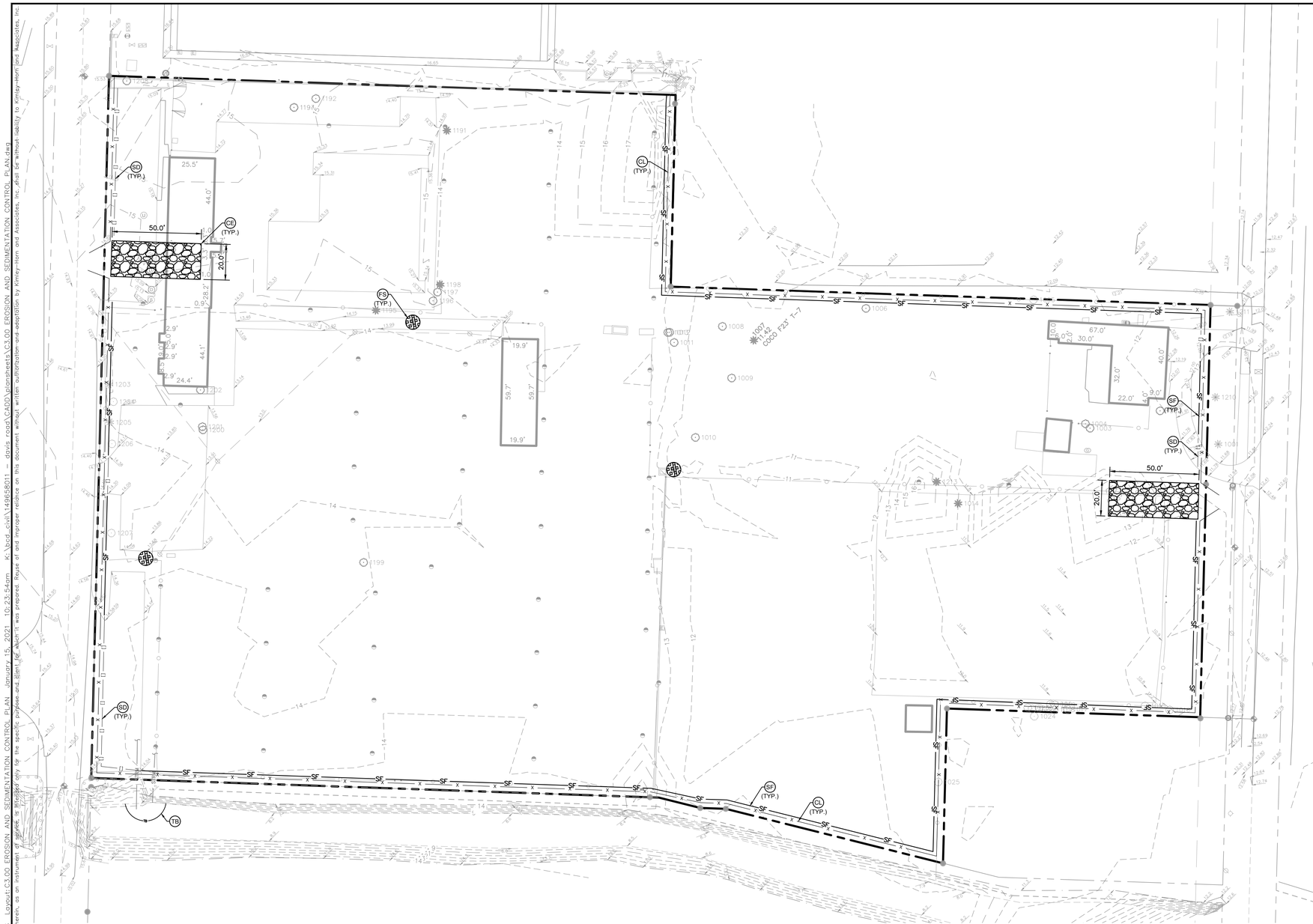


## LEGEND

- PROPERTY LINE
- SF — SILT FENCE
- SD — SILT DIKE
- TB — TURBIDITY BARRIER
- CL — CHAINLINK FENCE
- FS — FILTER SACK
- GSF — GRAVEL CURB INLET SEDIMENT FILTER
- CE — CONSTRUCTION ENTRANCE
- 27 — EXISTING CONTOUR ELEVATIONS
- 27 — PROPOSED CONTOUR ELEVATIONS
- 30.00+ EXISTING ELEVATION

## EROSION CONTROL NOTES

1. SEDIMENT BASINS AND TRAPS, PERIMETER DIKES, SEDIMENT BARRIERS AND OTHER MEASURES INTENDED TO TRAP SEDIMENT SHALL BE CONSTRUCTED AS A FIRST STEP IN ANY LAND DISTURBING ACTIVITY AND SHALL BE MADE FUNCTIONAL BEFORE UP-SLOPE LAND DISTURBANCE TAKES PLACE.
2. ALL SEDIMENT CONTROL MEASURES ARE TO BE ADJUSTED TO MEET FIELD CONDITIONS AT THE TIME OF CONSTRUCTION AND BE CONSTRUCTED PRIOR TO ANY GRADING OR DISTURBANCE OF EXISTING SURFACE MATERIAL ON BALANCE OF SITE. PERIMETER SEDIMENT BARRIERS SHALL BE CONSTRUCTED TO PREVENT SEDIMENT OR TRASH FROM FLOWING OR FLOATING ON TO ADJACENT PROPERTIES.
3. PERMANENT OR TEMPORARY SOIL STABILIZATION SHALL BE APPLIED TO DENUDED AREAS WITHIN SEVEN (7) DAYS AFTER FINAL GRADE IS REACHED ON ANY PORTION OF THE SITE. TEMPORARY SOIL STABILIZATION SHALL BE APPLIED WITHIN SEVEN (7) DAYS TO DENUDED AREAS THAT MAY NOT BE AT FINAL GRADE BUT WILL REMAIN UNDISTURBED FOR LONGER THAN 30 DAYS. PERMANENT STABILIZATION SHALL BE APPLIED TO AREAS THAT ARE TO BE LEFT UNDISTURBED FOR MORE THAN ONE YEAR.
4. DURING CONSTRUCTION OF THE PROJECT, SOIL STOCK PILES SHALL BE STABILIZED, COVERED OR CONTAINED WITH SEDIMENT TRAPPING MEASURES. THE APPLICANT IS RESPONSIBLE FOR THE TEMPORARY PROTECTION AND PERMANENT STABILIZATION OF ALL SOIL STOCKPILES ON SITE AS WELL AS SOIL INTENTIONALLY TRANSPORTED FROM THE PROJECT SITE.
5. A PERMANENT VEGETATIVE COVER SHALL BE ESTABLISHED ON DENUDED AREAS NOT OTHERWISE PERMANENTLY STABILIZED.
6. AFTER ANY SIGNIFICANT RAINFALL, SEDIMENT CONTROL STRUCTURES WILL BE INSPECTED FOR INTEGRITY. ANY DAMAGED DEVICES SHALL BE CORRECTED IMMEDIATELY.
7. CONCENTRATED RUNOFF SHALL NOT FLOW DOWN CUT OR FILL SLOPES UNLESS CONTAINED WITHIN AN ADEQUATE TEMPORARY OR PERMANENT CHANNEL, FLUME, SLOPE DRAIN STRUCTURE OR APPROVED CONTROL.
8. SEDIMENT WILL BE PREVENTED FROM ENTERING ANY STORM WATER SYSTEM, DITCH OR CHANNEL. ALL STORM WATER INLETS THAT ARE MADE OPERABLE DURING CONSTRUCTION SHALL BE PROTECTED SO THAT SEDIMENT-LADEN WATER CANNOT ENTER THE CONVEYANCE SYSTEM WITHOUT FIRST BEING FILTERED OR OTHERWISE TREATED TO REMOVE SEDIMENT.
9. WHEN WORK IN A LIVE WATERCOURSE IS PERFORMED, PRECAUTIONS SHALL BE TAKEN TO MINIMIZE ENCROACHMENT, CONTROL SEDIMENT TRANSPORT AND STABILIZE THE WORK AREA TO THE GREATEST EXTENT POSSIBLE DURING CONSTRUCTION.
10. PERIODIC INSPECTION AND MAINTENANCE OF ALL SEDIMENT CONTROL STRUCTURES MUST BE PROVIDED TO ENSURE INTENDED PURPOSE IS ACCOMPLISHED. THE DEVELOPER, OWNER AND/OR CONTRACTOR SHALL BE CONTINUALLY RESPONSIBLE FOR ALL SEDIMENT CONTROLS. SEDIMENT CONTROL MEASURES SHALL BE IN WORKING CONDITION AT THE END OF EACH WORKING DAY.
11. WHERE CONSTRUCTION VEHICLE ACCESS ROUTES INTERSECT PAVED PUBLIC ROADS, PROVISIONS SHALL BE MADE TO MINIMIZE THE TRANSPORT OF SEDIMENT BY TRACKING ONTO THE PAVED SURFACE. WHERE SEDIMENT IS TRANSPORTED ONTO A PUBLIC ROAD SURFACE WITH CURBS AND GUTTERS, THE ROAD SHALL BE CLEANED THOROUGHLY AT THE END OF EACH DAY. SEDIMENT SHALL BE REMOVED FROM THE ROADS BY SHOVELING OR SWEEPING AND TRANSPORTED TO A SEDIMENT CONTROL DISPOSAL AREA. STREET WASHING SHALL BE ALLOWED ONLY AFTER SEDIMENT IS REMOVED IN THIS MANNER. THIS PROVISION SHALL APPLY TO INDIVIDUAL SUBDIVISION LOTS AS WELL AS TO LARGER LAND DISTURBING ACTIVITIES.
12. ALL TEMPORARY EROSION AND SEDIMENT CONTROL MEASURES SHALL BE REMOVED WITHIN 30 DAYS AFTER FINAL SITE STABILIZATION OR AFTER THE TEMPORARY MEASURES ARE NO LONGER NEEDED.
13. PROPERTIES AND WATERWAYS DOWNSTREAM FROM CONSTRUCTION SITES SHALL BE PROTECTED FROM SEDIMENT DEPOSITION AND EROSION AT ALL TIMES DURING CONSTRUCTION.
14. EROSION CONTROL DESIGN AND CONSTRUCTION SHALL FOLLOW THE REQUIREMENTS IN INDEX NUMBERS 101, 102 AND 103 OF F.D.O.T. ROADWAY AND TRAFFIC DESIGN STANDARDS AND COUNTY PERMITS.
15. CONTRACTOR IS RESPONSIBLE FOR ALL SURFACE WATER DISCHARGES, RAINFALL RUN OFF OR DEWATERING ACTIVITIES.
16. CONTRACTOR MUST INCORPORATE ALL BMP'S NECESSARY TO MEET OR EXCEED STATE WATER QUALITY AND SWPPP REQUIREMENTS.
17. THE POLLUTION PREVENTION PLAN IS A MINIMUM GUIDELINE ONLY. ADDITIONAL BMP'S MAY BE NECESSARY AT CONTRACTOR'S EXPENSE.
18. NOI TO BE POSTED ON SITE.
19. DEWATERING ACTIVITIES:
    A. DISCHARGE MUST NOT EXCEED STATE WATER QUALITY STANDARDS.
    B. CONTRACTOR MUST HAVE A TRANSFERABLE SFWMD DEWATERING PERMIT.
    C. NO HYDRAULIC PUMPS MAY BE USED FOR DEWATERING UNLESS APPROVED BY THE WATER MANAGEMENT DISTRICT FOR THAT AREA.

### SOIL EROSION/SEDIMENTATION CONTROL OPERATION TIME SCHEDULE

NOTE: GENERAL CONTRACTOR TO COMPLETE TABLE WITH THEIR SPECIFIC PROJECT SCHEDULE

| CONSTRUCTION SEQUENCE | JAN | FEB | MAR | APR | MAY | JUN | JUL | AUG | SEP | OCT | NOV | DEC | JAN | FEB | MAR | APR | MAY | JUN |
|---|---|---|---|---|---|---|---|---|---|---|---|---|---|---|---|---|---|---|
| TEMPORARY CONSTRUCTION ENTRANCE | | | | | | | | | | | | | | | | | | |
| TEMPORARY CONTROL MEASURES | | | | | | | | | | | | | | | | | | |
| STRIP & STOCKPILE TOPSOIL | | | | | | | | | | | | | | | | | | |
| ROUGH GRADE | | | | | | | | | | | | | | | | | | |
| STORM FACILITIES | | | | | | | | | | | | | | | | | | |
| SITE CONSTRUCTION | | | | | | | | | | | | | | | | | | |
| BUILDING PAD CONSTRUCTION | | | | | | | | | | | | | | | | | | |
| FINISH GRADING | | | | | | | | | | | | | | | | | | |
| LANDSCAPING/SEED/FINAL STABILIZATION | | | | | | | | | | | | | | | | | | |
| | | | | | | | | | | | | | | | | | | |
| | | | | | | | | | | | | | | | | | | |
| | | | | | | | | | | | | | | | | | | |

PLANS ARE IN NAVD 1988 DATUM

**Always call 811 two full business days before you dig to have underground utilities located and marked.**

**Sunshine811.com**

THE PRESENCE OF GROUNDWATER SHOULD BE ANTICIPATED. CONTRACTOR'S BID SHALL INCLUDE CONSIDERATION FOR ADDRESSING THIS ISSUE AND OBTAINING ALL NECESSARY PERMITS.

| No. | REVISIONS | DATE | BY |
|---|---|---|---|
| | | | |

Kimley»Horn
© 2021 KIMLEY-HORN AND ASSOCIATES, INC.
1615 S. CONGRESS AVE., SUITE 201,
DELRAY BEACH, FL 33445
PHONE: 561-330-2345 FAX: 561-863-8175
WWW.KIMLEY-HORN.COM REGISTRY 696

LICENSED PROFESSIONAL
MICHAEL D. SPRUCE, P.E.
FLORIDA LICENSE NUMBER
52776
DATE: ____

| KHA PROJECT 149658011 | SCALE AS SHOWN | DESIGNED BY YXY |
|---|---|---|
| DATE JAN 2021 | | DRAWN BY YXY |
| | | CHECKED BY MDS |

# EROSION AND SEDIMENTATION CONTROL PLAN

# FONTANA TOWNHOMES

PREPARED FOR
MERITAGE HOMES FLORIDA
VILLAGE OF PALM SPRINGS

SHEET NUMBER
C3.00

Plotted By: YJ Yanoi Sheet Set: FONTANA TOWNHOMES Layout: C3.00 EROSION AND SEDIMENTATION CONTROL PLAN January 15, 2021 10:23:54am K:\brd_civil\149658011 - davis coast\CADD\plansheets\C3.00 EROSION AND SEDIMENTATION CONTROL PLAN.dwg
This document, together with the concepts and designs presented herein, as an instrument of service, is intended only for the specific purpose and client for which it was prepared. Reuse of and improper reliance on this document without written authorization and adaptation by Kimley-Horn and Associates, Inc. shall be without liability to Kimley-Horn and Associates, Inc.

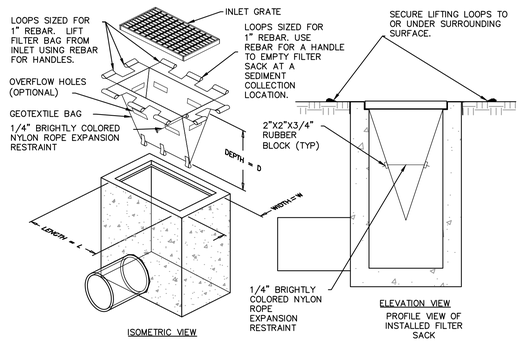


1. EMPTY FILTER SACK WHEN BRIGHTLY COLORED EXPANSION RESTRAINT CAN NO LONGER BE SEEN.
2. GEOTEXTILE WILL BE A WOVEN POLYPROPYLENE FABRIC THAT MEETS OR EXCEEDS REQUIREMENTS IN THE SPECIFICATIONS TABLE.
3. AN OIL ADSORBENT PAD OR PILLOW CAN BE PURCHASED WHEN OIL SPILLS ARE A CONCERN.
4. INSPECT PER REGULATORY REQUIREMENTS.
5. THE WIDTH, "W", OF THE FILTER SACK WILL MATCH THE INSIDE WIDTH OF THE GRATED INLET BOX.
6. THE DEPTH, "D", OF THE FILTER SACK WILL BE BETWEEN 18 INCHES AND 36 INCHES.
7. THE LENGTH, "L", OF THE FILTER SACK WILL MATCH THE INSIDE LENGTH OF THE GRATED INLET BOX.

| LOW TO MODERATE FLOW GEOTEXTILE FABRIC SPECIFICATION TABLE | | |
|---|---|---|
| PROPERTIES | TEST METHOD | UNITS |
| GRAB TENSILE STRENGTH | ASTM D-4632 | 300 LBS |
| GRAB TENSILE ELONGATION | ASTM D-4632 | 20 % |
| PUNCTURE | ASTM D-4833 | 120 LBS |
| MULLEN BURST | ASTM D-3786 | 800 PSI |
| TRAPEZOID TEAR | ASTM D-4533 | 120 LBS |
| UV RESISTANCE | ASTM D-4355 | 80 % |
| APPARENT OPENING SIZE | ASTM D-4751 | 40 US SIEVE |
| FLOW RATE | ASTM D-4491 | 40 GAL/MIN/SQ FT |
| PERMITTIVITY | ASTM D-4491 | 0.55 SEC -1 |
| MODERATE TO HIGH FLOW GEOTEXTILE FABRIC SPECIFICATION TABLE | | |
| PROPERTIES | TEST METHOD | UNITS |
| GRAB TENSILE STRENGTH | ASTM D-4632 | 265 LBS |
| GRAB TENSILE ELONGATION | ASTM D-4632 | 20 % |
| PUNCTURE | ASTM D-4833 | 135 LBS |
| MULLEN BURST | ASTM D-3786 | 420 PSI |
| TRAPEZOID TEAR | ASTM D-4533 | 45 LBS |
| UV RESISTANCE | ASTM D-4355 | 90 % |
| APPARENT OPENING SIZE | ASTM D-4751 | 20 US SIEVE |
| FLOW RATE | ASTM D-4491 | 200 GAL/MIN/SQ FT |
| PERMITTIVITY | ASTM D-4491 | 1.5 SEC -1 |

## FILTER SACK INLET PROTECTION
NOT TO SCALE

K-H

NOTES:
1. INSTALLED SILT DIKE UNIT SHALL HAVE CONTINUOUS AND FIRM CONTACT WITH PAVEMENT.

2. ADHESIVES SHALL BE LIQUID NAIL OR APPROVED EQUAL FOR CONCRETE PAVEMENT APPLICATIONS AND EMULSIFIED ASPHALT FOR ASPHALT APPLICATIONS. ADHESIVE SHALL BE PLACED WHERE THE UNITS OVERLAP AND A 20" STRIP ALONG BOTH EDGES.

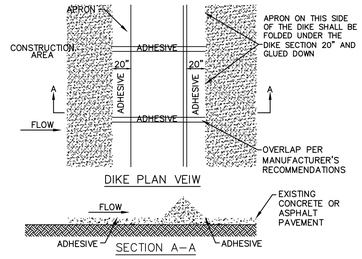


## SILT DIKE ON EXISTING PAVEMENT
NOT TO SCALE

K-H

## SEQUENCE OF CONSTRUCTION

UPON IMPLEMENTATION AND INSTALLATION OF THE FOLLOWNG AREAS: TRAILER, PARKING, LAYDOWN, PORTA-POTTY, WHEEL WASH, CONCRETE WASHOUT, FUEL AND MATERIAL STORAGE CONTAINERS, SOLID WASTE CONTAINERS, ETC., IMMEDIATELY DENOTE THEM ON THE SITE MAPS AND NOTE ANY CHANGES IN LOCATION AS THEY OCCUR THROUGHOUT THE CONSTRUCTION PROCESS.

PHASE 1:
1. CONSTRUCT STABILIZED CONSTRUCTION ENTRANCE AND INSTALL SILT FENCE, TURBIDITY BARRIER AND INLET PROTECTION.
2. PERFORM CLEARING AND GRUBBING AND DEMOLITION.

PHASE 2:
1. PERFORM MASS GRADING. ROUGH GRADE TO ESTABLISH PROPOSED DRAINAGE PATTERNS.
2. CONSTRUCT PROPOSED DRAINAGE INFRASTRUCTURE.
3. TEMPORARILY SEED WITH PURE LIVE SEED, THROUGHOUT CONSTRUCTION, DISTURBED AREAS THAT WILL BE INACTIVE FOR 7 DAYS OR MORE OR AS REQUIRED BY GENERIC PERMIT.
4. CONSTRUCT PROPOSED IMPROVEMENTS.
5. COMPLETE FINAL GRADING AND FINAL STABILIZATION.
6. REMOVE TEMPORARY EROSION CONTROL MEASURES.

## MAINTENANCE (ALL PHASES)

ALL MEASURES STATED ON THIS SITE MAP, AND IN THE STORM WATER POLLUTION PREVENTION PLAN, SHALL BE MAINTAINED IN FULLY FUNCTIONAL CONDITION UNTIL NO LONGER REQUIRED FOR A COMPLETED PHASE OF WORK OR FINAL STABILIZATION OF THE SITE. ALL EROSION AND SEDIMENTATION CONTROL MEASURES AND PRACTICES WHETHER TEMPORARY OR PERMANENT, SHALL BE AT ALL TIMES THE RESPONSIBILITY OF THE CONTRACTOR/PRIMARY PERMITEE. THESE MEASURES SHALL BE CHECKED BY A QUALIFIED PERSON IN ACCORDANCE WITH THE CONTRACT DOCUMENTS OR THE APPLICABLE PERMIT, WHICHEVER IS MORE STRINGENT, AND REPAIRED IN ACCORDANCE WITH THE FOLLOWING:

1. INLET PROTECTION DEVICES AND BARRIERS SHALL BE REPAIRED OR REPLACED IF THEY SHOW SIGNS OF UNDERMINING OR DETERIORATION.
2. ALL SEEDED AREAS SHALL BE CHECKED REGULARLY TO SEE THAT A GOOD STAND IS MAINTAINED. AREAS SHOULD BE FERTILIZED, WATERED, AND RESEEDED AS NEEDED.
3. SILT FENCES SHALL BE REPAIRED TO THEIR ORIGINAL CONDITIONS IF DAMAGED. SEDIMENT SHALL BE REMOVED FROM THE SILT FENCES WHEN IT REACHES ONE-HALF THE HEIGHT OF THE SILT FENCE.
4. THE CONSTRUCTION EXITS SHALL BE MAINTAINED IN A CONDITION WHICH WILL PREVENT TRACKING OR FLOW OF MUD ONTO PUBLIC RIGHTS-OF-WAY. THIS MAY REQUIRE PERIODIC TOP DRESSING OF THE CONSTRUCTION EXITS AS CONDITIONS DEMAND.
5. THE TEMPORARY PARKING AND STORAGE AREA SHALL BE KEPT IN GOOD CONDITION (SUITABLE FOR PARKING AND STORAGE). THIS MAY REQUIRE PERIODIC TOP DRESSING OF THE TEMPORARY PARKING AREA AS CONDITIONS DEMAND.

## NOTES

1. CONTRACTOR TO CONSIDER POTENTIAL DEWATERING ACTIVITIES WHEN PREPARING BID DOCUMENTS FOR THIS PROJECT.
2. CONTRACTOR SHALL OBTAIN ANY NECESSARY DEWATERING PERMITS AS SITE CONDITIONS AND CONSTRUCTION ACTIVITIES REQUIRE.
3. CONTRACTOR TO USE B.M.P.'S TO ENSURE COMPLIANCE WITH NPDES AND WATER MANAGEMENT DISTRICT REGULATIONS FOR STORMWATER DISCHARGE FROM CONSTRUCTION ACTIVITIES AND DEWATERING OPERATIONS.
4. THE ESCAPE OF SEDIMENT FROM THE SITE SHALL BE PREVENTED BY THE INSTALLATION OF EROSION AND SEDIMENT CONTROL MEASURES AND PRACTICES PRIOR, OR CONCURRENT WITH LAND DISTURBING ACTIVITIES.

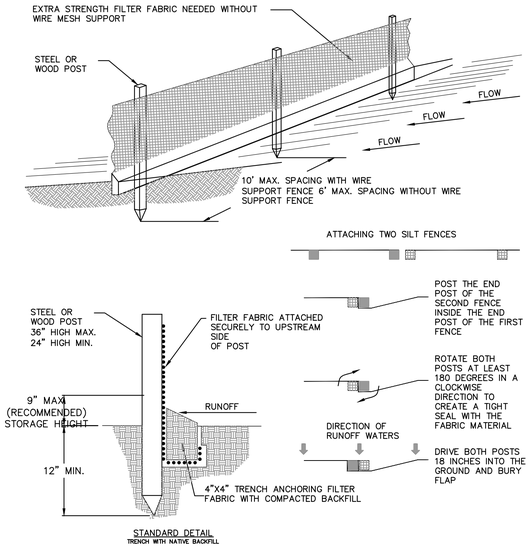


NOTE:

1. INSPECT AND REPAIR FENCE EVERY 7 DAYS AND AFTER EACH STORM EVENT AND REMOVE SEDIMENT WHEN NECESSARY.
2. REMOVED SEDIMENT SHALL BE DEPOSITED TO AN AREA THAT WILL NOT CONTRIBUTE SEDIMENT OFF-SITE AND CAN BE PERMANENTLY STABILIZED.
3. SILT FENCE SHALL BE PLACED ON SLOPE CONTOURS TO MAXIMIZE PONDING EFFICIENCY.
4. DOUBLE ROW SILT FENCE SHALL BE INSTALLED WITH 3' HORIZONTAL SPACING.

## STAKED SILT FENCE
NOT TO SCALE

K-H

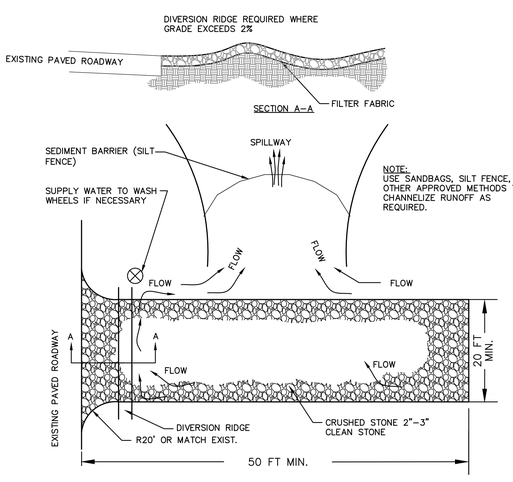


NOTES:

1. THE ENTRANCE SHALL BE MAINTAINED IN A CONDITION THAT WILL PREVENT TRACKING OR FLOWING OF SEDIMENT ONTO PUBLIC RIGHTS-OF-WAY. THIS MAY REQUIRE TOP DRESSING, REPAIR AND/OR CLEANOUT OF ANY MEASURES USED TO TRAP SEDIMENT.
2. WHEN NECESSARY, WHEELS SHALL BE CLEANED PRIOR TO ENTRANCE ONTO PUBLIC RIGHT-OF-WAY.
3. WHEN WASHING IS REQUIRED, IT SHALL BE DONE ON AN AREA STABILIZED WITH CRUSHED STONE THAT DRAINS INTO AN APPROVED SEDIMENT TRAP OR SEDIMENT BASIN.

## TEMPORARY GRAVEL CONSTRUCTION ENTRANCE
NOT TO SCALE

K-H

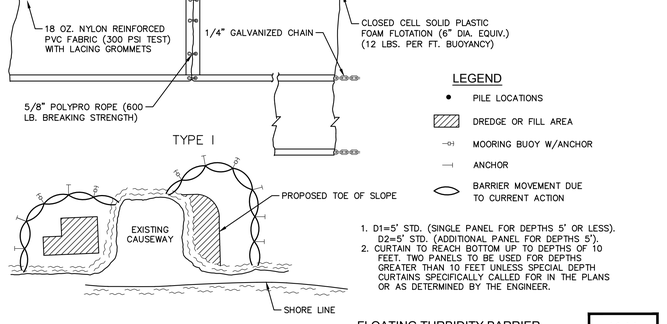


1. D1=5' STD. (SINGLE PANEL FOR DEPTHS 5' OR LESS). D2=5' STD. (ADDITIONAL PANEL FOR DEPTHS 5').
2. CURTAIN TO REACH BOTTOM UP TO DEPTHS OF 10 FEET. TWO PANELS TO BE USED FOR DEPTHS GREATER THAN 10 FEET UNLESS SPECIAL DEPTH CURTAINS SPECIFICALLY CALLED FOR IN THE PLANS OR AS DETERMINED BY THE ENGINEER.

## FLOATING TURBIDITY BARRIER
NOT TO SCALE

K-H

PLANS ARE IN NAVD 1988 DATUM

**Always call 811 two full business days before you dig to have underground utilities located and marked.**

**Sunshine811.com**

THE PRESENCE OF GROUNDWATER SHOULD BE ANTICIPATED. CONTRACTOR'S BID SHALL INCLUDE CONSIDERATION FOR ADDRESSING THIS ISSUE AND OBTAINING ALL NECESSARY PERMITS.

| No. | REVISIONS | DATE | BY |
|---|---|---|---|

Kimley»Horn
© 2021 KIMLEY-HORN AND ASSOCIATES, INC.
1615 S. CONGRESS AVE., SUITE 201,
DELRAY BEACH, FL 33445
PHONE: 561-330-2345 FAX: 561-863-8175
WWW.KIMLEY-HORN.COM REGISTRY 696

LICENSED PROFESSIONAL
MICHAEL D. SPRUCE, P.E.
FLORIDA LICENSE NUMBER
52776
DATE: _____

KHA PROJECT 149658011
DATE JAN 2021
SCALE AS SHOWN
DESIGNED BY YXY
DRAWN BY YXY
CHECKED BY MDS

# EROSION AND SEDIMENTATION CONTROL DETAILS

# FONTANA TOWNHOMES
PREPARED FOR
MERITAGE HOMES
VILLAGE OF PALM SPRINGS FLORIDA

SHEET NUMBER
C3.10

Plotted By: YL Yamai Sheet Set: FONTANA TOWNHOMES Layout: C3.10 EROSION AND SEDIMENTATION CONTROL DETAILS January 15, 2021 10:23:58am K:\bcd_civil\149658011 - davis road\CADD\plansheets\C3.00 EROSION AND SEDIMENTATION CONTROL DETAILS.dwg
This document, together with the concepts and designs presented herein, as an instrument of service, is intended only for the specific purpose and client for which it was prepared. Reuse of and improper reliance on this document without written authorization and adaptation by Kimley-Horn and Associates, Inc. shall be without liability to Kimley-Horn and Associates, Inc.

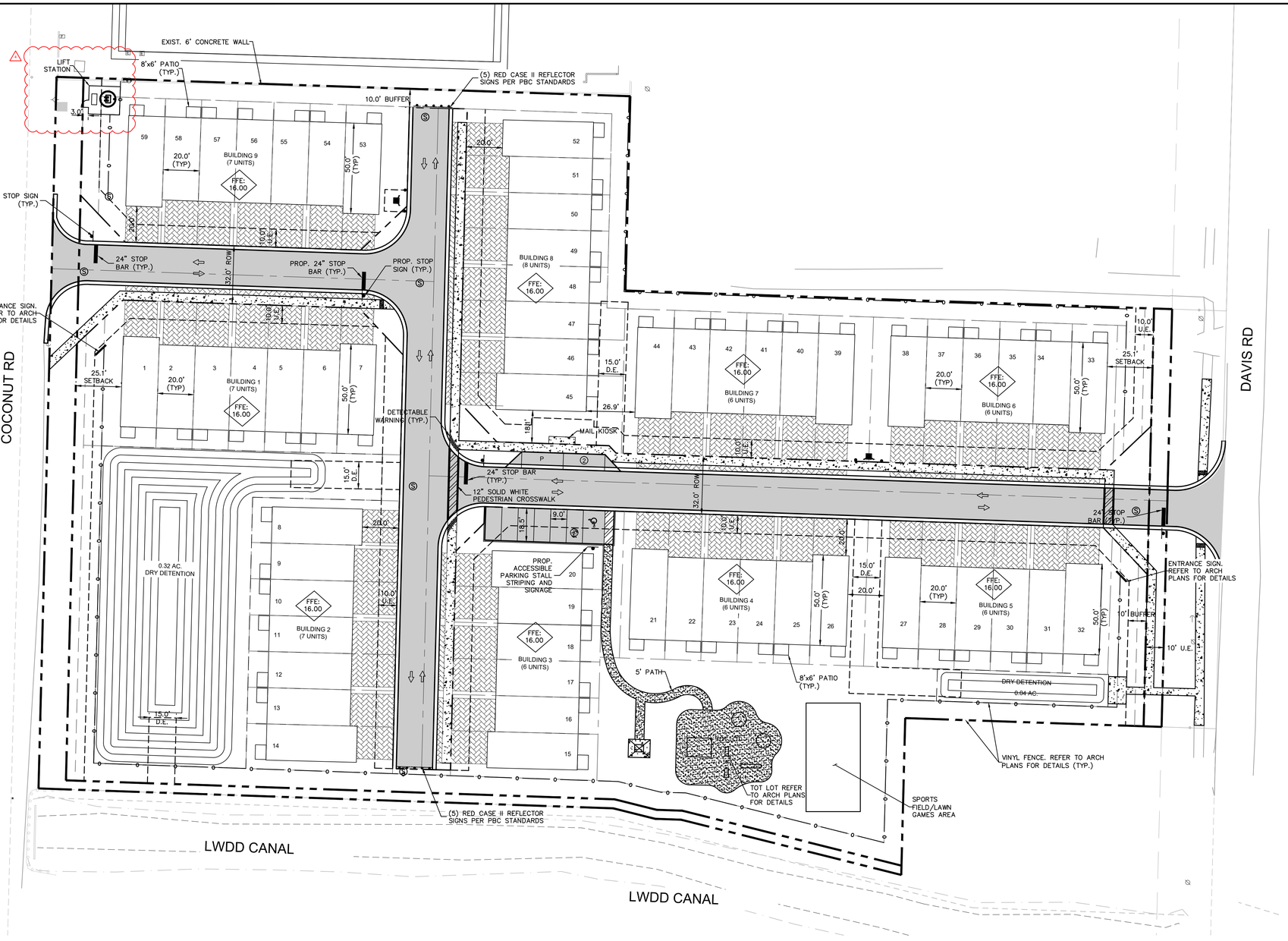


GRAPHIC SCALE IN FEET
0 15 30 60

NORTH

## LEGEND

- PROPERTY LINE
- CENTERLINE OF R/W
- (1) PARKING STALL COUNT
- ADA PARKING STALL
- PROPOSED CONCRETE SIDEWALK
- PROPOSED LIGHT POLES (SEE PHOTOMETRIC PLANS FOR DETAILS)

## HORIZONTAL CONTROL NOTES

1. ALL RAISED CURBING IS TYPE "D" UNLESS OTHERWISE STATED.
2. TYPE "D" CURB AND TYPE "F" CURB AND GUTTER SHALL BE CONSTRUCTED PER FDOT INDEX 300. ALL TYPE "D" CURB SHALL HAVE A 3' STRAIGHT TRANSITION AT THE BEGINNING AND ENDING POINTS WHEN NOT CONNECTING TO TYPE "F" CURB AND GUTTER.
3. ALL DIMENSIONS SHOWN ARE TO FACE OF CURB OR EDGE OF PAVEMENT FOR NO CURB, UNLESS OTHERWISE NOTED.
4. ALL CURB RAMPS AND SIDEWALKS ENTERING PARKING OR TRAVEL WAYS SHALL HAVE DETECTABLE WARNING SURFACES 2' DEEP AND THE WIDTH OF THE SIDEWALK. REFER TO FDOT 2015 DESIGN STANDARDS INDEX 304.
5. 
6. ALL STOP BARS AND CROSSWALKS SHALL BE THERMOPLASTIC. ALL OTHER PAVEMENT MARKINGS ARE PAINT, UNLESS OTHERWISE NOTED.
7. REFER TO LANDSCAPE PLANS FOR PLANTING AND DETAILS.

PLANS ARE IN NAVD 1988 DATUM

**Always call 811 two full business days before you dig to have underground utilities located and marked.**

**Sunshine811.com**

THE PRESENCE OF GROUNDWATER SHOULD BE ANTICIPATED. CONTRACTOR'S BID SHALL INCLUDE CONSIDERATION FOR ADDRESSING THIS ISSUE AND OBTAINING ALL NECESSARY PERMITS.

| No. | REVISIONS | DATE | BY |
|---|---|---|---|
| 1 | VILLAGE OF PALM SPRINGS COMMENTS | 01/14/21 | YXY |


Kimley»Horn
© 2021 KIMLEY-HORN AND ASSOCIATES, INC.
1615 S. CONGRESS AVE., SUITE 201,
DELRAY BEACH, FL 33445
PHONE: 561-330-2345 FAX: 561-863-8175
WWW.KIMLEY-HORN.COM REGISTRY 696


LICENSED PROFESSIONAL
MICHAEL D. SPRUCE, P.E.
FLORIDA LICENSE NUMBER
52776
DATE: ____

KHA PROJECT 149658011
DATE JAN. 2021
SCALE AS SHOWN
DESIGNED BY YXY
DRAWN BY YXY
CHECKED BY MDS

# HORIZONTAL CONTROL PLAN

# FONTANA TOWNHOMES

PREPARED FOR
MERITAGE HOMES
VILLAGE OF PALM SPRINGS FLORIDA

SHEET NUMBER
C4.00


Plotted By: YXY Sheet Set: FONTANA TOWNHOMES Layout: C4.00 HORIZONTAL CONTROL PLAN January 15, 2021 10:24:11am K:\bcd_civil\149658011 – davis road\CADD\plansheets\C4.00 HORIZONTAL CONTROL PLAN.dwg
This document, together with the concepts and designs presented herein, as an instrument of service, is intended only for the specific purpose and client for which it was prepared. Reuse of and improper reliance on this document without written authorization and adaptation by Kimley-Horn and Associates, Inc. shall be without liability to Kimley-Horn and Associates, Inc.

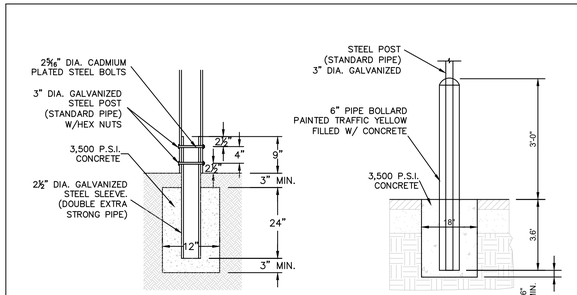


BASE DETAIL IN LAWN OR LANDSCAPED AREAS

ADA BASE DETAIL IN PAVED AREAS

SIGN BASE
NOT TO SCALE

K-H

R1-1




SIGN
NOT TO SCALE

K-H

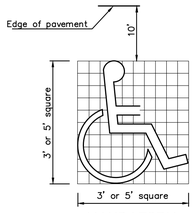


MANDATORY
White Paint

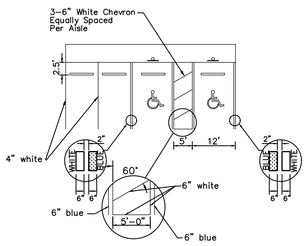


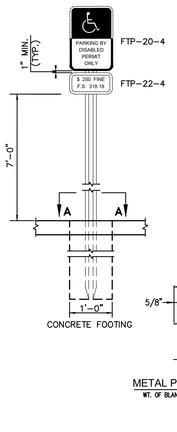


METAL POST - SECTION A-A
WT. OF BLANK POST SHALL BE 2-2.5 #/FT.

NOTES:

1. STRIPING IS TO BE PAINT, CONFORMING WITH FDOT STANDARD INDEX 17346.
2. DIMENSIONS SHOWN ARE TO THE CENTERLINE OF THE STRIPE.
3. EACH SPACE SHALL HAVE FTP-20-4 AND FTP-22-4 SIGNS AS SHOWN, FABRICATED WITH REFLECTIVE COATING IN THE SYMBOL, MESSAGE, AND BORDER, APPLIED TO A SHEET ALUMINUM BACKING 0.080 IN THICKNESS. MESSAGE LETTERING SHALL BE PER THE MANUAL ON UNIFORM TRAFFIC CONTROL DEVICES, LATEST EDITION.
4. CONCRETE FOOTING SHALL BE PORTLAND CEMENT CONCRETE AND HAVE A MINIMUM COMPRESSIVE STRENGTH OF 3,000 PSI AT 28 DAYS.
5. METAL POST SHALL BE GALVANIZED AND ALL BOLTS, NUTS, WASHERS, AND SCREWS SHALL BE RUSTPROOF. POST SHALL BE PLACED A MINIMUM OF 2'-6" CLEAR FROM FACE OF CURB OR WHEELSTOP. POST SHALL HAVE 3/8" HOLES DRILLED 1" ON CENTER FULL LENGTH. MOUNT SIGNS WITH 5/16"x2-1/4" BOLTS, TOP AND BOTTOM OF SIGNS.

ADA STRIPING AND SIGNAGE
NOT TO SCALE

K-H

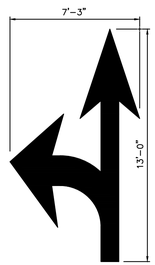


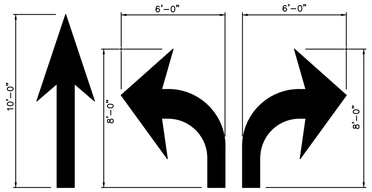


SOLID ARROW MARKINGS
USED AT EXITS FROM THE PARKING LOT TO PUBLIC STREETS

PAVEMENT MARKING
NOT TO SCALE

NOTES:

1. ARROWS SHALL BE APPLIED IN ACCORDANCE WITH SECTION 3B.20 OF THE MANUAL ON UNIFORM TRAFFIC CONTROL DEVICES FOR STREETS AND HIGHWAYS.
2. THESE ARROWS ARE TO BE PAINTED RETROREFLECTIVE WHITE.
3. OPEN ARROWS SHALL CONSIST OF A 4" PERIMETER STRIPE.

K-H

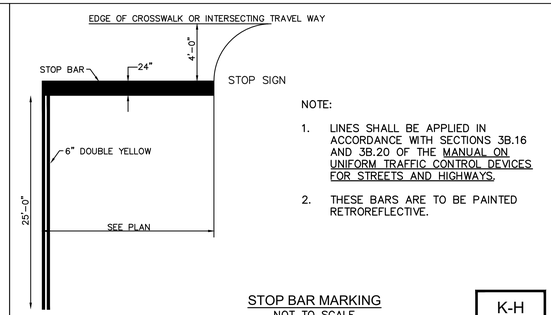


NOTE:

1. LINES SHALL BE APPLIED IN ACCORDANCE WITH SECTIONS 3B.16 AND 3B.20 OF THE MANUAL ON UNIFORM TRAFFIC CONTROL DEVICES FOR STREETS AND HIGHWAYS.
2. THESE BARS ARE TO BE PAINTED RETROREFLECTIVE.

STOP BAR MARKING
NOT TO SCALE

K-H

R1-5L




SIGN
NOT TO SCALE

K-H

R1-5R




SIGN
NOT TO SCALE

K-H

PLANS ARE IN NAVD 1988 DATUM

Always call 811 two full business days before you dig to have underground utilities located and marked.

Sunshine811.com

THE PRESENCE OF GROUNDWATER SHOULD BE ANTICIPATED. CONTRACTOR'S BID SHALL INCLUDE CONSIDERATION FOR ADDRESSING THIS ISSUE AND OBTAINING ALL NECESSARY PERMITS.

| No. | REVISIONS | DATE | BY |
|---|---|---|---|

Kimley»Horn

© 2021 KIMLEY-HORN AND ASSOCIATES, INC.
1615 S. CONGRESS AVE, SUITE 201,
DELRAY BEACH, FL 33445
PHONE: 561-330-2345 FAX: 561-863-8175
WWW.KIMLEY-HORN.COM REGISTRY 696

LICENSED PROFESSIONAL
MICHAEL D. SPRUCE, P.E.
FLORIDA LICENSE NUMBER
52776
DATE: _____

| KHA PROJECT 149658011 | DATE JAN 2021 | SCALE AS SHOWN | DESIGNED BY YXY | DRAWN BY YXY | CHECKED BY MDS |
|---|---|---|---|---|---|

SITE DETAILS

FONTANA TOWNHOMES
PREPARED FOR
MERITAGE HOMES
VILLAGE OF PALM SPRINGS FLORIDA

SHEET NUMBER
C4.10

Plotted By: YL Yampi Sheet Set: FONTANA TOWNHOMES Layout: C4.10 SITE DETAILS January 15, 2021 10:24:15am K:\brd_civil\149658011 - davis road\CADD\plan sheets\C4.00 HORIZONTAL CONTROL PLAN.dwg
This document, together with the concepts and designs presented herein, as an instrument of service, is intended only for the specific purpose and client for which it was prepared. Reuse of and improper reliance on this document without written authorization and adaptation by Kimley-Horn and Associates, Inc. shall be without liability to Kimley-Horn and Associates, Inc.

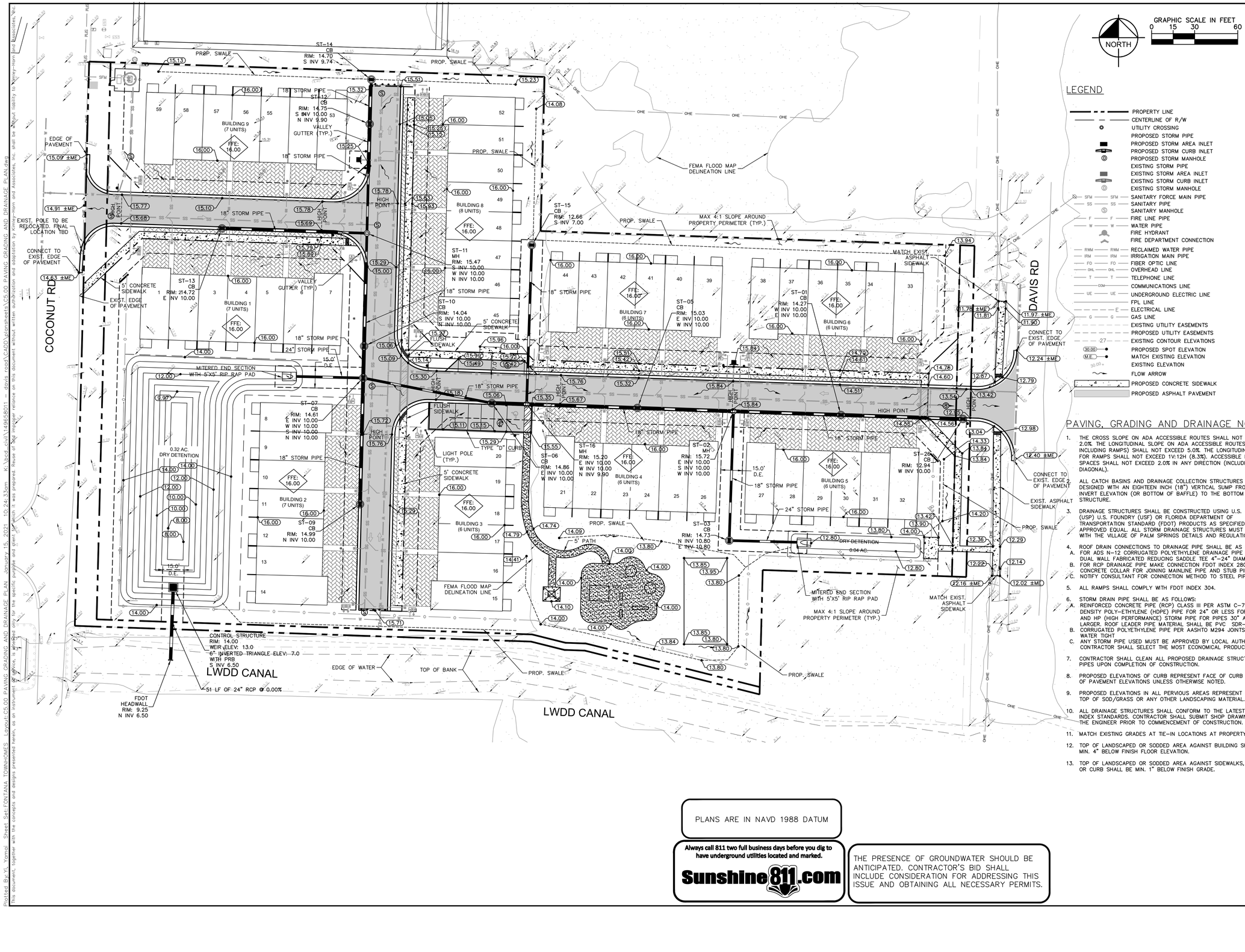


## LEGEND

- PROPERTY LINE
- CENTERLINE OF R/W
- UTILITY CROSSING
- PROPOSED STORM PIPE
- PROPOSED STORM AREA INLET
- PROPOSED STORM CURB INLET
- PROPOSED STORM MANHOLE
- EXISTING STORM PIPE
- EXISTING STORM AREA INLET
- EXISTING STORM CURB INLET
- EXISTING STORM MANHOLE
- SFM — SANITARY FORCE MAIN PIPE
- SS — SANITARY PIPE
- SANITARY MANHOLE
- F — FIRE LINE PIPE
- W — WATER PIPE
- FIRE HYDRANT
- FIRE DEPARTMENT CONNECTION
- RWM — RECLAIMED WATER PIPE
- IRM — IRRIGATION MAIN PIPE
- FO — FIBER OPTIC LINE
- OHL — OVERHEAD LINE
- T — TELEPHONE LINE
- COM — COMMUNICATIONS LINE
- UE — UNDERGROUND ELECTRIC LINE
- FPL LINE
- E — ELECTRICAL LINE
- G — GAS LINE
- EXISTING UTILITY EASEMENTS
- PROPOSED UTILITY EASEMENTS
- 27 — EXISTING CONTOUR ELEVATIONS
- 30.00 — PROPOSED SPOT ELEVATION
- M.E. — MATCH EXISTING ELEVATION
- 30.00 — EXISTING ELEVATION
- FLOW ARROW
- PROPOSED CONCRETE SIDEWALK
- PROPOSED ASPHALT PAVEMENT

## PAVING, GRADING AND DRAINAGE NOTES

1. THE CROSS SLOPE ON ADA ACCESSIBLE ROUTES SHALL NOT EXCEED 2.0%. THE LONGITUDINAL SLOPE ON ADA ACCESSIBLE ROUTES (NOT INCLUDING RAMPS) SHALL NOT EXCEED 5.0%. THE LONGITUDINAL SLOPE FOR RAMPS SHALL NOT EXCEED 1V:12H (8.3%). ACCESSIBLE PARKING SPACES SHALL NOT EXCEED 2.0% IN ANY DIRECTION (INCLUDING DIAGONAL).
2. ALL CATCH BASINS AND DRAINAGE COLLECTION STRUCTURES SHALL BE DESIGNED WITH AN EIGHTEEN INCH (18") VERTICAL SUMP FROM THE INVERT ELEVATION (OR BOTTOM OF BAFFLE) TO THE BOTTOM OF THE STRUCTURE.
3. DRAINAGE STRUCTURES SHALL BE CONSTRUCTED USING U.S. PRECAST (USP) U.S. FOUNDRY (USF) OR FLORIDA DEPARTMENT OF TRANSPORTATION STANDARD (FDOT) PRODUCTS AS SPECIFIED OR APPROVED EQUAL. ALL STORM DRAINAGE STRUCTURES MUST COMPLY WITH THE VILLAGE OF PALM SPRINGS DETAILS AND REGULATIONS.
4. ROOF DRAIN CONNECTIONS TO DRAINAGE PIPE SHALL BE AS FOLLOWS:
   A. FOR ADS N-12 CORRUGATED POLYETHYLENE DRAINAGE PIPE USE ADS DUAL WALL FABRICATED REDUCING SADDLE TEE 4"-24" DIAMETER
   B. FOR RCP DRAINAGE PIPE MAKE CONNECTION FDOT INDEX 280, CONCRETE COLLAR FOR JOINING MAINLINE PIPE AND STUB PIPE DETAIL
   C. NOTIFY CONSULTANT FOR CONNECTION METHOD TO STEEL PIPE.
5. ALL RAMPS SHALL COMPLY WITH FDOT INDEX 304.
6. STORM DRAIN PIPE SHALL BE AS FOLLOWS:
   A. REINFORCED CONCRETE PIPE (RCP) CLASS III PER ASTM C-76 OR HIGH DENSITY POLY-ETHYLENE (HDPE) PIPE FOR 24" OR LESS FOR PIPES AND HP (HIGH PERFORMANCE) STORM PIPE FOR PIPES 30" AND LARGER. ROOF LEADER PIPE MATERIAL SHALL BE PVC SDR-35.
   B. CORRUGATED POLYETHYLENE PIPE PER AASHTO M294 JOINTS SHALL BE WATER TIGHT
   C. ANY STORM PIPE USED MUST BE APPROVED BY LOCAL AUTHORITIES. CONTRACTOR SHALL SELECT THE MOST ECONOMICAL PRODUCT.
7. CONTRACTOR SHALL CLEAN ALL PROPOSED DRAINAGE STRUCTURES AND PIPES UPON COMPLETION OF CONSTRUCTION.
8. PROPOSED ELEVATIONS OF CURB REPRESENT FACE OF CURB OR EDGE OF PAVEMENT ELEVATIONS UNLESS OTHERWISE NOTED.
9. PROPOSED ELEVATIONS IN ALL PERVIOUS AREAS REPRESENT FINISHED TOP OF SOD/GRASS OR ANY OTHER LANDSCAPING MATERIAL.
10. ALL DRAINAGE STRUCTURES SHALL CONFORM TO THE LATEST FDOT INDEX STANDARDS. CONTRACTOR SHALL SUBMIT SHOP DRAWINGS TO THE ENGINEER PRIOR TO COMMENCEMENT OF CONSTRUCTION.
11. MATCH EXISTING GRADES AT TIE-IN LOCATIONS AT PROPERTY LINES.
12. TOP OF LANDSCAPED OR SODDED AREA AGAINST BUILDING SHALL BE MIN. 4" BELOW FINISH FLOOR ELEVATION.
13. TOP OF LANDSCAPED OR SODDED AREA AGAINST SIDEWALKS, PAVEMENT OR CURB SHALL BE MIN. 1" BELOW FINISH GRADE.

PLANS ARE IN NAVD 1988 DATUM

**Always call 811 two full business days before you dig to have underground utilities located and marked.**

Sunshine811.com

THE PRESENCE OF GROUNDWATER SHOULD BE ANTICIPATED. CONTRACTOR'S BID SHALL INCLUDE CONSIDERATION FOR ADDRESSING THIS ISSUE AND OBTAINING ALL NECESSARY PERMITS.

| No. | REVISIONS | DATE | BY |
|---|---|---|---|
| 2 | VILLAGE OF PALM SPRINGS COMMENTS | 12/17/20 | TVC |


Kimley»Horn


© 2021 KIMLEY-HORN AND ASSOCIATES, INC.


1615 S. CONGRESS AVE., SUITE 201,
DELRAY BEACH, FL 33445
PHONE: 561-330-2345 FAX: 561-863-8175
WWW.KIMLEY-HORN.COM REGISTRY 696


LICENSED PROFESSIONAL
MICHAEL D. SPRUCE, P.E.
FLORIDA LICENSE NUMBER
52776

| | |
|---|---|
| KHA PROJECT | 149658011 |
| DATE | JAN 2021 |
| SCALE | AS SHOWN |
| DESIGNED BY | YXY |
| DRAWN BY | YXY |
| CHECKED BY | MDS |

# PAVING GRADING AND DRAINAGE PLAN

# FONTANA TOWNHOMES

PREPARED FOR
MERITAGE HOMES
VILLAGE OF PALM SPRINGS FLORIDA

SHEET NUMBER
C5.00


Plotted By: YJ Yomoi Sheet Set: FONTANA TOWNHOMES Layout: C5.00 PAVING GRADING AND DRAINAGE PLAN January 15, 2021 10:24:33am K:\bcd_civil\149658011 - davis road\CADD\sheetsets\C5.00 PAVING GRADING AND DRAINAGE PLAN.dwg
This document, together with the concepts and designs presented herein, as an instrument of service, is intended only for the specific purpose and client for which it was prepared. Reuse of and improper reliance on this document without written authorization and adaptation by Kimley-Horn and Associates, Inc. shall be without liability to Kimley-Horn and Associates, Inc.

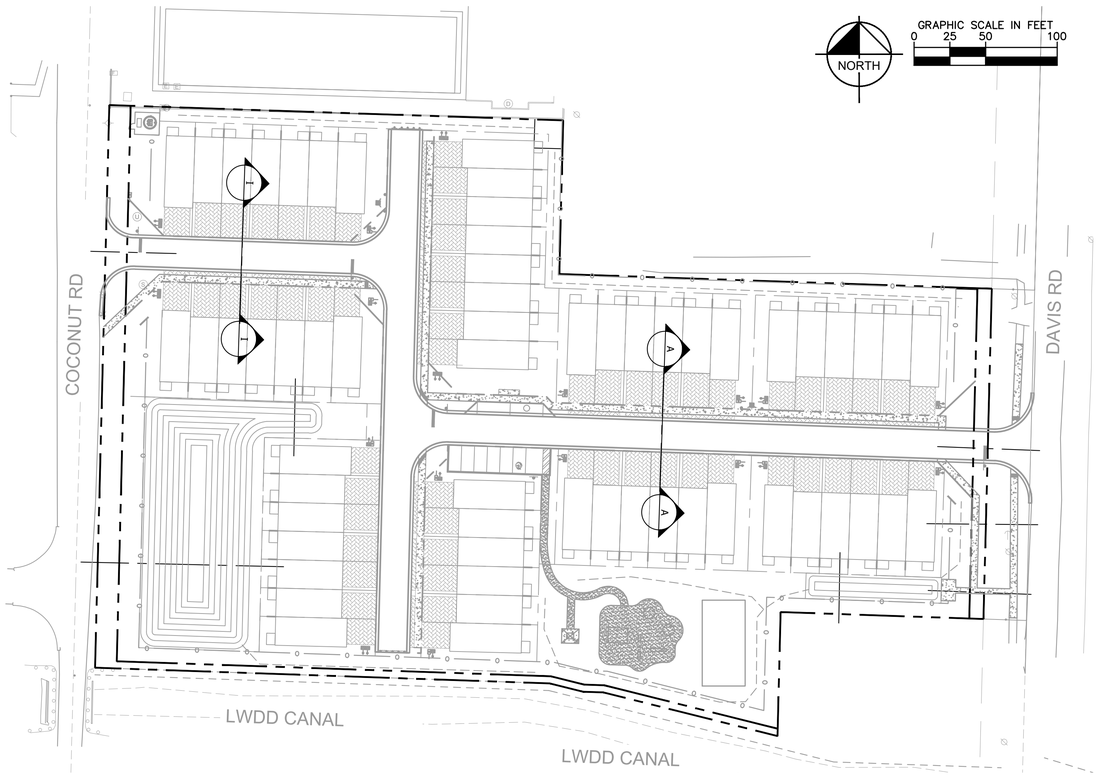


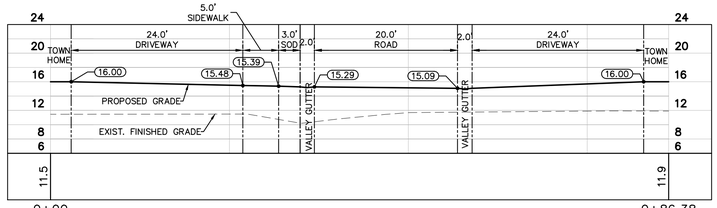


SECTION A-A
ROAD CROSS SECTION EAST SIDE OF SITE

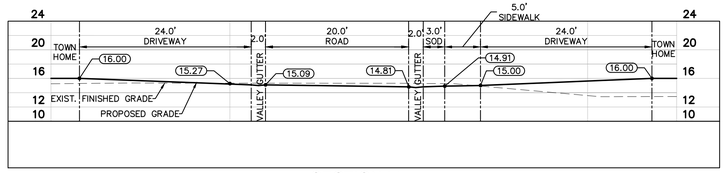


SECTION I-I
ROAD CROSS SECTION WEST SIDE OF SITE

| No. | REVISIONS | DATE | BY |
|---|---|---|---|
| 1 | VILLAGE OF PALM SPRINGS COMMENTS | 12/17/20 | TVC |

Kimley»Horn

© 2021 KIMLEY-HORN AND ASSOCIATES, INC.
1615 S. CONGRESS AVE, SUITE 201,
DELRAY BEACH, FL 33445
PHONE: 561-330-2345 FAX: 561-863-8175
WWW.KIMLEY-HORN.COM REGISTRY 696

LICENSED PROFESSIONAL
MICHAEL D. SPRUCE, P.E.
FLORIDA LICENSE NUMBER
52776
DATE: ____

KHA PROJECT 149658011
DATE JAN 2021
SCALE AS SHOWN
DESIGNED BY YXY
DRAWN BY YXY
CHECKED BY MDS

# CROSS SECTIONS PLAN

# FONTANA TOWNHOMES

PREPARED FOR
MERITAGE HOMES
VILLAGE OF PALM SPRINGS FLORIDA

SHEET NUMBER
C5.01

Plotted By: YL Yampi Sheet Set: FONTANA TOWNHOMES Layout: C5.01 CROSS SECTIONS PLAN January 15, 2021 10:24:50am K:\bcd_civil\149658011 — docs — cond\CADD\plansheets\C5.01 CROSS SECTIONS PLAN.dwg
This document, together with the concepts and designs presented herein, as an instrument of service, is intended only for the specific purpose and client for which it was prepared. Reuse of and improper reliance on this document without written authorization and adaptation by Kimley-Horn and Associates, Inc. shall be without liability to Kimley-Horn and Associates, Inc.

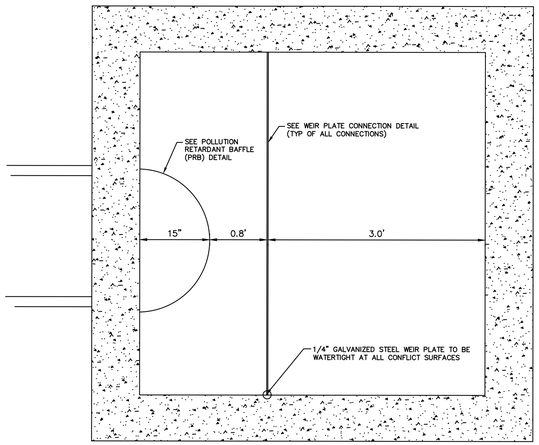


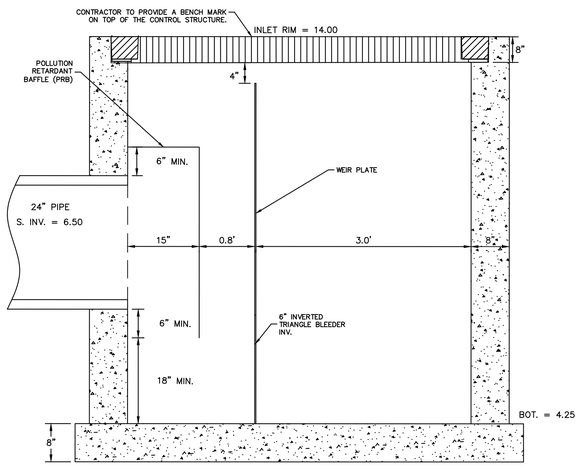


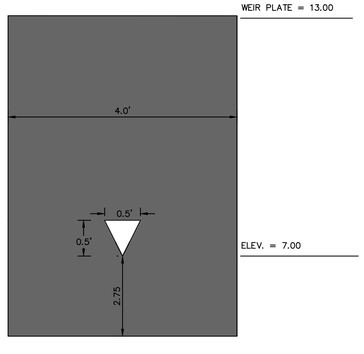


CONTROL STRUCTURE DETAIL
NOT TO SCALE

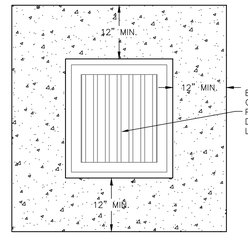


CATCH BASIN CONCRETE COLLAR
NOT TO SCALE

NOTES:
1. CONCRETE COLLAR SHALL HAVE POSITIVE DRAINAGE TOWARDS INLET CATCH BASIN. SLOPE SHALL NOT EXCEED 1.0%.

K-H

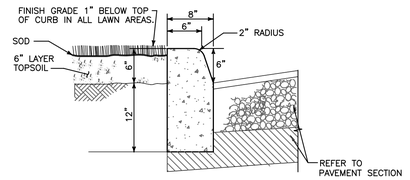


TYPE "D" CURB
NOT TO SCALE

K-H

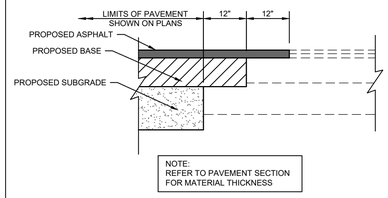


PAVEMENT MATCHING DETAIL
NOT TO SCALE

K-H

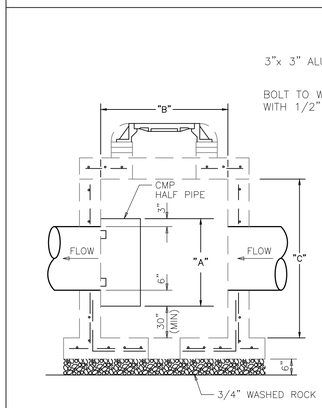


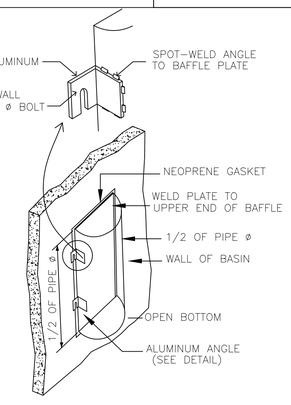


| PIPE DIAMETER | BAFFLE SCHEDULE "A" | "B" | "C" |
|---|---|---|---|
| 15" | 27" | 24" | 37" |
| 18" | 30" | 24" | 37" |
| 24" | 36" | 36" | 36" |
| 30" | 42" | 36" | 42" |
| 36" | 48" | 42" | 54" |
| 42" | 56" | 56" | 56" |
| 48" | 60" | 48" | 60" |
| 60" | 72" | 72" | 72" |

NOTES:
1. HALF ROUND PLATE TO BE WELDED TO TOP FOR POLLUTION RETARDANT BASIN.
2. THE HALF ROUND PIPE SHALL BE ONE SIZE LARGER THAN DISCHARGE PIPE.
3. FOR STRUCTURE'S CONSTRUCTION DIMENSIONS AND SPEC'S., SEE PRECAST CATCH BASIN DETAIL.
4. WEEP HOLES ARE NOT PERMITED IN WELLFIELD AREAS.

POLLUTION RETARDANT BAFFLE (PRB)
NOT TO SCALE

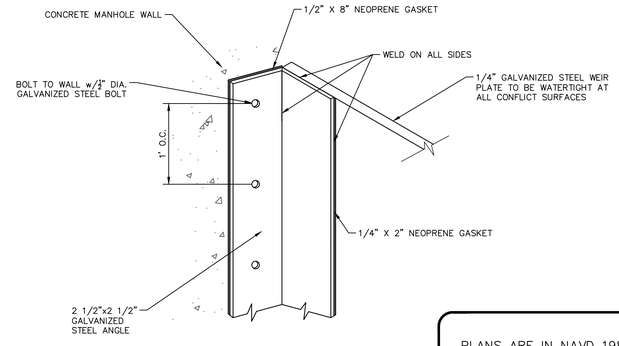


WEIR PLATE CONNECTION DETAIL
NOT TO SCALE

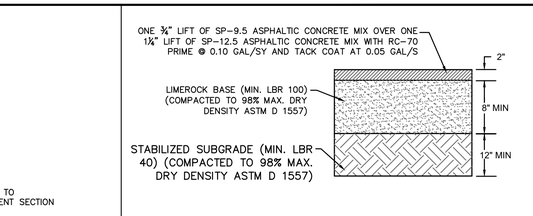


HEAVY DUTY ASPHALTIC CONCRETE PAVEMENT SECTION
NOT TO SCALE

K-H

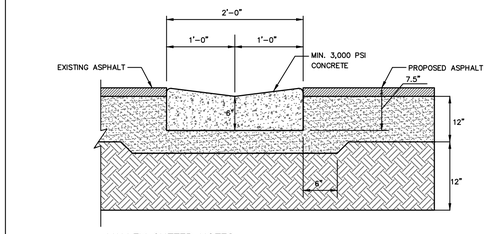


VALLEY GUTTER NOTES:

ALL TYPE "F" CURB ELEMENTS SHALL BE PLACED SO THAT THEY ARE ONE-QUARTER (1/4) INCH HIGHER THAN ADJACENT INLET FRAMES AND GRATES. CONCRETE SHALL HAVE A MINIMUM TWENTY-EIGHT (28) DAY STRENGTH OF 3000 P.S.I.

UNLESS OTHERWISE APPROVED, ALL CURB ELEMENTS SHALL HAVE A LIMEROCK FOUNDATION OR "PAD" WITH A MINIMUM LBR OF 100 AND MINIMUM CARBONATE CONTENT OF 70%. PADS SHALL BE AT LEAST FOUR (4) INCHES THICK, EXTENDING SIX (6) INCHES (MIN.) BEYOND THE EDGES OF THE CONCRETE COMPACTED TO 98% OF MAXIMUM DENSITY, PER AASHTO T-180. THE USE OF OTHER MATERIALS SHALL BE CONSIDERED ON A CASE BY CASE BASIS.

VALLEY GUTTER DETAIL
NOT TO SCALE

K-H

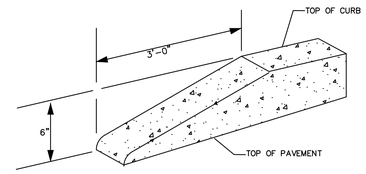


ALL CURBS TO HAVE STANDARD 3' TRANSITION FROM 6" HEIGHT TO FLUSH (0" HEIGHT). A STANDARD TEMPLATE SHALL BE USED AT ALL LOCATIONS TO PROVIDE UNIFORM CURB TRNASITION THROUGHOUT THE PROJECT.

STANDARD CURB END
NOT TO SCALE

K-H

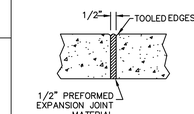


EXPANSION JOINT
NOT TO SCALE
(120 FT. MAX. SPACING)

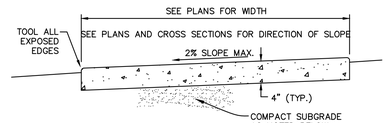


TYPICAL SECTION

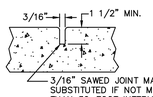


CONTRACTION JOINT
NOT TO SCALE
(5 FT. MAX. SPACING)

NOTES:
1. PROVIDE EXPANSION JOINTS BETWEEN SIDEWALK AND CURB, SIDEWALK, OR AT ANY OTHER RIGID STRUCTURE.
2. EXPANSION JOINTS SHALL BE PROVIDED AT 120 FT. MAXIMUM SPACING.
3. ULTIMATE COMPRESSIVE STRENGTH OF CONCRETE SHALL BE 3,000 P.S.I. (MIN.) @ 28 DAYS FOR SIDEWALKS.
4. MINIMUM THICKNESS OF SIDEWALK SHALL BE AS NOTED ABOVE.
5. FOR SIDEWALKS OR DRIVEWAYS WITHIN R.O.W., COMPACT SUBGRADE TO 98% OF MAXIMUM DENSITY AS DETERMINED BY ASTM1557. COMPACTION OUTSIDE R.O.W. MAY BE 95% OF MAXIMUM DENSITY.

CONCRETE SIDEWALK DETAIL
NOT TO SCALE

K-H

PLANS ARE IN NAVD 1988 DATUM

Always call 811 two full business days before you dig to have underground utilities located and marked.
Sunshine811.com

THE PRESENCE OF GROUNDWATER SHOULD BE ANTICIPATED. CONTRACTOR'S BID SHALL INCLUDE CONSIDERATION FOR ADDRESSING THIS ISSUE AND OBTAINING ALL NECESSARY PERMITS.

| No. | REVISIONS | DATE | BY |
|---|---|---|---|
| 1 | VILLAGE OF PALM SPRINGS COMMENTS | 12/17/20 | TVC |

Kimley»Horn

© 2021 KIMLEY-HORN AND ASSOCIATES, INC.
1615 S. CONGRESS AVE., SUITE 201,
DELRAY BEACH, FL 33445
PHONE: 561-330-2345 FAX: 561-863-8175
WWW.KIMLEY-HORN.COM REGISTRY 696

LICENSED PROFESSIONAL
MICHAEL D. SPRUCE, P.E.
FLORIDA LICENSE NUMBER
52776
DATE: _____

| KHA PROJECT 149658011 | DATE JAN 2021 |
|---|---|
| SCALE AS SHOWN | |
| DESIGNED BY YXY | |
| DRAWN BY YXY | |
| CHECKED BY MDS | |

PAVING GRADING AND DRAINAGE DETAILS

FONTANA TOWNHOMES
PREPARED FOR
MERITAGE HOMES
VILLAGE OF PALM SPRINGS FLORIDA

SHEET NUMBER
C5.10

Plotted By: YXY Yomoi Sheet Set: FONTANA TOWNHOMES Layout: C5.10 PAVING GRADING AND DRAINAGE DETAILS January 15, 2021 10:25:05am K:\tod_civil\149658011 – davis road\CADD\plansheets\C5.00 PAVING GRADING AND DRAINAGE PLAN.dwg
This document, together with the concepts and designs presented herein, as an instrument of service, is intended only for the specific purpose and client for which it was prepared. Reuse of and improper reliance on this document without written authorization and adaptation by Kimley-Horn and Associates, Inc. shall be without liability to Kimley-Horn and Associates, Inc.

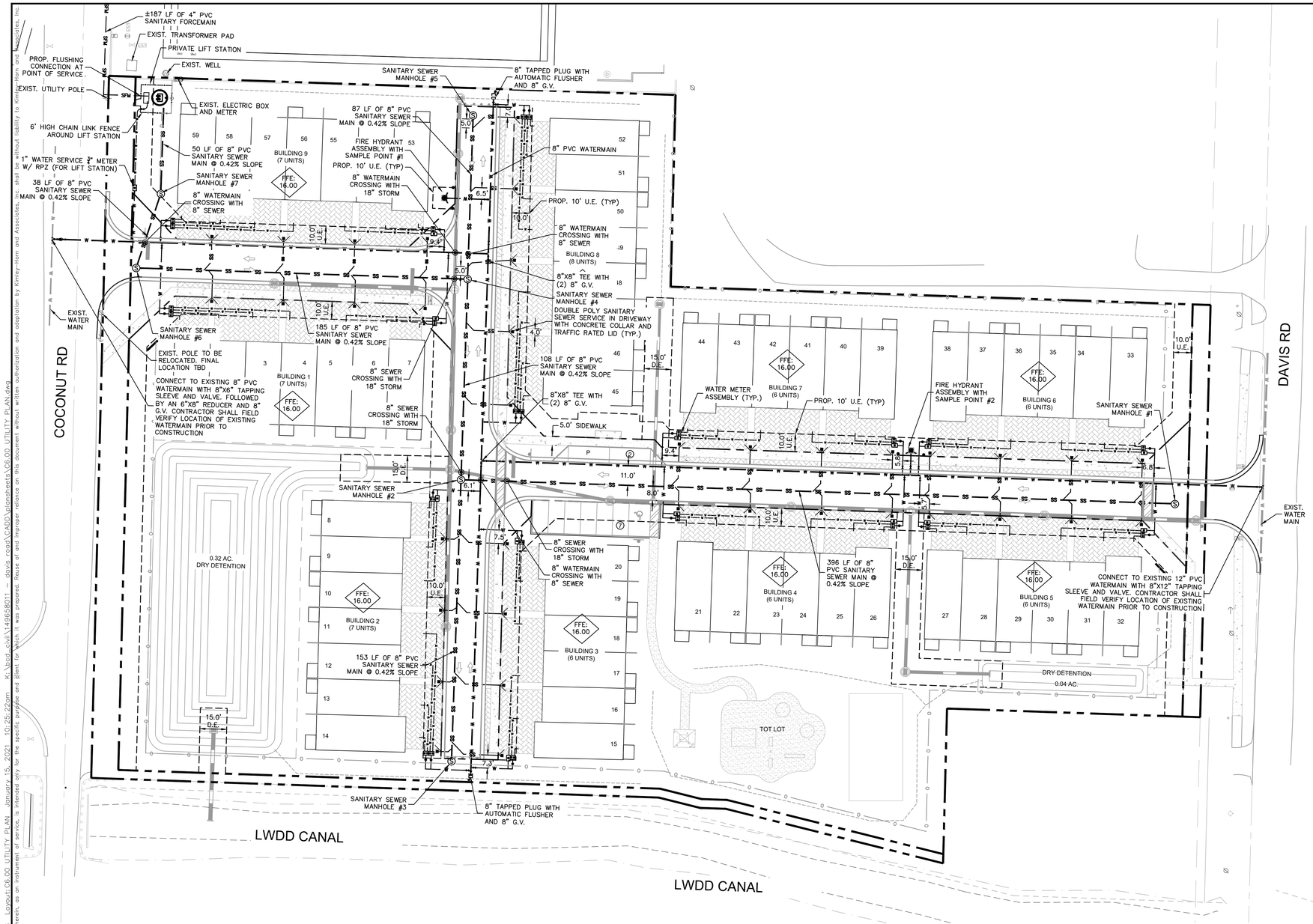


GRAPHIC SCALE IN FEET
0 15 30 60

NORTH

## LEGEND

- PROPERTY LINE
- CENTERLINE OF R/W
- UTILITY CROSSING
- SFM — SFM — PROPOSED SANITARY FORCE MAIN PIPE
- SS — SS — PROPOSED SANITARY PIPE
- PROPOSED SANITARY MANHOLE
- F — F — PROPOSED FIRE LINE PIPE
- W — W — PROPOSED WATER LINE PIPE
- PROPOSED FIRE HYDRANT
- OHL — OHL — PROPOSED OVERHEAD LINE
- T — T — PROPOSED TELEPHONE LINE
- COM — PROPOSED COMMUNICATIONS LINE
- UE — UE — PROPOSED UNDERGROUND ELECTRIC LINE
- PROPOSED UTILITY EASEMENTS
- SFM — SFM — EXISTING SANITARY FORCE MAIN PIPE
- SS — SS — EXISTING SANITARY PIPE
- EXISTING SANITARY MANHOLE
- W — W — EXISTING WATER PIPE
- EXISTING FIRE HYDRANT
- OHL — OHL — EXISTING OVERHEAD LINE
- T — T — EXISTING TELEPHONE LINE
- COM — EXISTING COMMUNICATIONS LINE
- UE — UE — EXISTING UNDERGROUND ELECTRIC LINE
- G — G — EXISTING GAS LINE
- EXISTING UTILITY EASEMENTS
- STORM PIPE (SEE PAVING, GRADING AND DRAINAGE PLANS)
- STORM AREA INLET
- STORM MANHOLE

## UTILITY NOTES

1. CONTRACTOR SHALL FURNISH AND INSTALL NECESSARY PIPE AND FITTINGS TO TRANSITION PIPE MATERIALS WHEN REQUIRED AND TO CONNECT TO BUILDING PLUMBING.
2. CONTRACTOR SHALL SUPPORT AND PROTECT ALL EXISTING UTILITIES WHEN CONSTRUCTING NEW UTILITIES.
3. ALL MANHOLES, VALVES, CLEANOUTS AND OTHER SUCH BOXES IN PAVEMENT OR SIDEWALKS SHALL BE SET FLUSH WITH PAVEMENT TO MATCH THE PROPOSED SLOPE AND SHALL BE H-20 TRAFFIC RATED.
4. ANY TREES OR SHRUBS PLACED WITHIN WATER, SEWER, OR DRAINAGE EASEMENTS SHALL CONFORM TO PALM BEACH COUNTY WATER UTILITIES DEPARTMENT STANDARD DETAILS.
5. NO PROPOSED IMPROVEMENTS, BUILDINGS OR ANY KIND OF CONSTRUCTION CAN BE PLACED ON OR WITHIN ANY WATER, SEWER, OR DRAINAGE EASEMENTS, UNLESS APPROVED BY PALM BEACH COUNTY WATER UTILITIES DEPARTMENT'S ENGINEER.
6. NO PROPOSED STRUCTURES SHALL BE INSTALLED WITHIN A HORIZONTAL DISTANCE OF 10-FEET FROM ANY EXISTING OR PROPOSED WATER, SEWER, OR DRAINAGE FACILITIES, UNLESS APPROVED BY PALM BEACH COUNTY WATER UTILITIES DEPARTMENT'S ENGINEER.
7. ALL WATER MAIN (WM) SHALL BE PVC C-900 DR-18 UNLESS OTHERWISE NOTED.
8. ALL FIRE MAIN (FM) SHALL BE DIP WITH ALL JOINTS RESTRAINED WITH MEGALUGS UNLESS OTHERWISE NOTED. ALL FIRE MAIN SHALL BE LAID AT 36" MIN. COVER. ALL FIRE RELATED CONSTRUCTION SHALL FOLLOW THE FLORIDA FIRE PREVENTION CODE 5TH EDITION – FLORIDA SPECIFIC NFPA 1, FIRE CODE, 2012 EDITION AND FLORIDA SPECIFIC NFPA 101, LIFE SAFETY CODE, 2012 EDITION.
9. ALL DUCTILE IRON PIPE (DIP) SHALL BE CLASS 350 UNLESS OTHERWISE NOTED. ALL DIP SHALL BE MARKED PER FLORIDA DEPARTMENT OF ENVIRONMENTAL PROTECTION (FDEP) STANDARDS.
10. ALL NEW FIRE HYDRANTS SHALL HAVE "OUT OF SERVICE" SIGNS AFFIXED AT TIME OF INSTALLATION. SIGNS SHALL REMAIN IN PLACE UNTIL THE WATER SYSTEM IS CLEARED FOR USE.
11. ALL WATER MAIN AND FORCE MAINS SHALL HAVE A MINIMUM 36" COVER OVER THE TOP OF THE PIPE UNLESS OTHERWISE NOTED. WATER AND FIRE MAINS SHALL HAVE MIN. 6" VERTICAL SEPARATION FROM EACH OTHER.
12. A MINIMUM HORIZONTAL DISTANCE OF 10 FEET MUST BE PROVIDED BETWEEN WATER MAINS AND STORM OR SANITARY SEWERS.ALL FITTINGS FOR WATER MAIN AND FIRE MAIN SHALL BE DUCTILE IRON MECHANICAL JOINT FITTINGS UNLESS OTHERWISE NOTED.
13. WATER METER SIZES SHALL BE DESIGNED BY ENGINEER OF RECORD AND SHALL BE CHECKED AND AUTHORIZED BY PALM BEACH COUNTY WATER UTILITIES..
14. PIPE DEFLECTION OF WATER MAIN AND FIRE MAIN SHALL NOT EXCEED MANUFACTURER'S RECOMMENDATIONS.
15. ALL GRAVITY SEWER MAINS SHALL BE PVC SDR-26 UNLESS OTHERWISE NOTED
16. ALL GRAVITY SEWER LATERALS SHALL BE PVC SDR-35 UNLESS OTHERWISE NOTED.
17. ALL SEWER FORCE MAIN (SFM) SHALL BE PVC C-900 DR-18 UNLESS OTHERWISE NOTED. ALL SEWER FORCE MAIN IS PRIVATE.
18. ANY VITRIFIED CLAY PIPE (VCP) DAMAGED BY NEW CONSTRUCTION OR CONNECTIONS SHALL BE REPLACED WITH NEW SANITARY SEWER MAIN PIPE.
19. SANITARY SEWER PIPE LENGTHS ARE MEASURED FROM CENTER OF MANHOLE TO CENTER OF MANHOLE. CONTRACTOR SHALL ADJUST LIMITS OF PVC TO DIP AS SHOWN IN PROFILE.
20. ALL SEWER LATERALS SHALL BE CONNECTED TO SEWER MAIN AND NOT DIRECTLY INTO SEWER MANHOLES.
21. EXISTING WATER MAIN AND SEWER MAIN SHALL BE REMOVED AFTER PROPOSED WATER MAIN AND/OR SEWER MAIN HAS BEEN TESTED AND ACCEPTED BY PALM BEACH COUNTY HEALTH DEPARTMENT AND EXISTING SERVICES HAVE BEEN RELOCATED.
22. PROPOSED WATER AND SEWER IMPROVEMENTS IN PRIVATE PROPERTY SHALL MEET PALM BEACH COUNTY HEALTH DEPARTMENT SEPARATION REQUIREMENTS, THESE CONFLICTS WILL BE ADDRESS DURING CONSTRUCTION AND WON'T AFFECT THE PUBLIC SAFETY.
23. CONTRACTOR SHALL COORDINATE UNDERGROUND ELECTRIC SERVICE CONNECTION WITH FPL FOR CONDUIT SIZE AND BURIED DEPTH REQUIREMENT.

## ADDITIONAL UTILITY NOTES

1. PALM BEACH COUNTY WATER UTILITIES DEPARTMENT MUST BE GIVEN AT LEAST 48 HOURS NOTIFICATION PRIOR TO ANY SHUT-DOWN AND/OR REMOVAL OF EXISTING WATER MAIN OR SANITARY SEWER LINES.
2. COUNTY MAINTAINED UTILITIES WILL NEED TO BE TESTED AND PROTECTED (IE. PAVED AT LEAST UP TO FIRST LIFT, IF NOT ROADWAY) PRIOR TO ISSUANCE OF CERTIFICATION OF OCCUPANCY.
3. LEAD FREE BRASS WATER WORKS PRODUCTS SHALL MEET THE REQUIREMENT OF ASNI/AWWA C800 AND THE MAXIMUM LEAD CONTENT OF S.3872 AND NSF 61 ANNEX G. THE MANUFACTURER'S DESIGNATION AS A LEAD FREE PRODUCT SHALL BE PERMANENTLY STAMPED OR CAST INTO THE PRODUCT'S BODY. EFFECTIVE JANUARY 1, 2013, ONLY LEAD FREE BRASS WATER WORKS PRODUCTS SHALL BE INSTALLED IN CONTACT WITH POTABLE WATER.
4. ALL PROPOSED BACKFLOW PREVENTERS AND DOUBLE DETECTOR CHECK VALVES SHALL BE USC CERTIFIED AND LEAD FREE.

PLANS ARE IN NAVD 1988 DATUM

Always call 811 two full business days before you dig to have underground utilities located and marked.
Sunshine811.com

WATER MAIN AND FORCE MAIN ARE PUBLIC. SANITARY SEWER AND LIFT STATION ARE PRIVATE.

THE PRESENCE OF GROUNDWATER SHOULD BE ANTICIPATED. CONTRACTOR'S BID SHALL INCLUDE CONSIDERATION FOR ADDRESSING THIS ISSUE AND OBTAINING ALL NECESSARY PERMITS.

| No. | REVISIONS | DATE | BY |
|---|---|---|---|
| 3 | VILLAGE OF PALM SPRINGS COMMENTS | 12/17/20 | TVC |

Kimley»Horn

© 2021 KIMLEY-HORN AND ASSOCIATES, INC.
1615 S. CONGRESS AVE, SUITE 201,
DELRAY BEACH, FL 33445
PHONE: 561-330-2345 FAX: 561-863-8175
WWW.KIMLEY-HORN.COM REGISTRY 696

LICENSED PROFESSIONAL
MICHAEL D. SPRUCE, P.E.
FLORIDA LICENSE NUMBER
52776
DATE: ____

KHA PROJECT 149658011
DATE JAN. 2021
SCALE AS SHOWN
DESIGNED BY YXY
DRAWN BY YXY
CHECKED BY MDS

# UTILITY PLAN

# FONTANA TOWNHOMES

PREPARED FOR
MERITAGE HOMES FLORIDA
VILLAGE OF PALM SPRINGS

SHEET NUMBER
C6.00

Plotted By: Yanoi Sheet Set: FONTANA TOWNHOMES Layout: C6.00 UTILITY PLAN January 15, 2021 10:25:22pm K:\bcd_civil\149658011 – davis road\CADD\plansheets\C6.00 UTILITY PLAN.dwg
This document, together with the concepts and designs presented herein, as an instrument of service, is intended only for the specific purpose and client for which it was prepared. Reuse of and improper reliance on this document without written authorization and adaptation by Kimley-Horn and Associates, Inc. shall be without liability to Kimley-Horn and Associates, Inc.




GRAPHIC SCALE IN FEET
0 15 30 60

NORTH

## LEGEND

- PROPERTY LINE
- CENTERLINE OF R/W
- UTILITY CROSSING
- SFM — SFM — PROPOSED SANITARY FORCE MAIN PIPE
- SS — SS — PROPOSED SANITARY PIPE
- PROPOSED SANITARY MANHOLE
- F — F — PROPOSED FIRE LINE PIPE
- W — W — PROPOSED WATER LINE PIPE
- PROPOSED FIRE HYDRANT
- OHL — OHL — PROPOSED OVERHEAD LINE
- T — T — PROPOSED TELEPHONE LINE
- COM — PROPOSED COMMUNICATIONS LINE
- UE — UE — PROPOSED UNDERGROUND ELECTRIC LINE
- PROPOSED UTILITY EASEMENTS
- SFM — SFM — EXISTING SANITARY FORCE MAIN PIPE
- SS — SS — EXISTING SANITARY PIPE
- EXISTING SANITARY MANHOLE
- W — W — EXISTING WATER PIPE
- EXISTING FIRE HYDRANT
- OHL — OHL — EXISTING OVERHEAD LINE
- T — T — EXISTING TELEPHONE LINE
- COM — EXISTING COMMUNICATIONS LINE
- UE — UE — EXISTING UNDERGROUND ELECTRIC LINE
- G — G — EXISTING GAS LINE
- EXISTING UTILITY EASEMENTS
- STORM PIPE (SEE PAVING, GRADING AND DRAINAGE PLANS)
- STORM AREA INLET
- STORM MANHOLE

## UTILITY NOTES

1. CONTRACTOR SHALL FURNISH AND INSTALL NECESSARY PIPE AND FITTINGS TO TRANSITION PIPE MATERIALS WHEN REQUIRED AND TO CONNECT TO BUILDING PLUMBING.
2. CONTRACTOR SHALL SUPPORT AND PROTECT ALL EXISTING UTILITIES WHEN CONSTRUCTING NEW UTILITIES.
3. ALL MANHOLES, VALVES, CLEANOUTS AND OTHER SUCH BOXES IN PAVEMENT OR SIDEWALKS SHALL BE SET FLUSH WITH PAVEMENT TO MATCH THE PROPOSED SLOPE AND SHALL BE H-20 TRAFFIC RATED.
4. ANY TREES OR SHRUBS PLACED WITHIN WATER, SEWER, OR DRAINAGE EASEMENTS SHALL CONFORM TO PALM BEACH COUNTY WATER UTILITIES DEPARTMENT STANDARD DETAILS.
5. NO PROPOSED IMPROVEMENTS, BUILDINGS OR ANY KIND OF CONSTRUCTION CAN BE PLACED ON OR WITHIN ANY WATER, SEWER, OR DRAINAGE EASEMENTS, UNLESS APPROVED BY PALM BEACH COUNTY WATER UTILITIES DEPARTMENT'S ENGINEER.
6. NO PROPOSED STRUCTURES SHALL BE INSTALLED WITHIN A HORIZONTAL DISTANCE OF 10-FEET FROM ANY EXISTING OR PROPOSED WATER, SEWER, OR DRAINAGE FACILITIES, UNLESS APPROVED BY PALM BEACH COUNTY WATER UTILITIES DEPARTMENT'S ENGINEER.
7. ALL WATER MAIN (WM) SHALL BE PVC C-900 DR-18 UNLESS OTHERWISE NOTED.
8. ALL FIRE MAIN (FM) SHALL BE DIP WITH ALL JOINTS RESTRAINED WITH MEGALUGS UNLESS OTHERWISE NOTED. ALL FIRE MAIN SHALL BE LAID AT 36" MIN. COVER. ALL FIRE RELATED CONSTRUCTION SHALL FOLLOW THE FLORIDA FIRE PREVENTION CODE 5TH EDITION – FLORIDA SPECIFIC NFPA 1, FIRE CODE, 2012 EDITION AND FLORIDA SPECIFIC NFPA 101, LIFE SAFETY CODE, 2012 EDITION.
9. ALL DUCTILE IRON PIPE (DIP) SHALL BE CLASS 350 UNLESS OTHERWISE NOTED. ALL DIP SHALL BE MARKED PER FLORIDA DEPARTMENT OF ENVIRONMENTAL PROTECTION (FDEP) STANDARDS.
10. ALL NEW FIRE HYDRANTS SHALL HAVE "OUT OF SERVICE" SIGNS AFFIXED AT TIME OF INSTALLATION. SIGNS SHALL REMAIN IN PLACE UNTIL THE WATER SYSTEM IS CLEARED FOR USE.
11. ALL WATER MAIN AND FORCE MAINS SHALL HAVE A MINIMUM 36" COVER OVER THE TOP OF THE PIPE UNLESS OTHERWISE NOTED. WATER AND FIRE MAINS SHALL HAVE MIN. 6" VERTICAL SEPARATION FROM EACH OTHER.
12. A MINIMUM HORIZONTAL DISTANCE OF 10 FEET MUST BE PROVIDED BETWEEN WATER MAINS AND STORM OR SANITARY SEWERS.ALL FITTINGS FOR WATER MAIN AND FIRE MAIN SHALL BE DUCTILE IRON MECHANICAL JOINT FITTINGS UNLESS OTHERWISE NOTED.
13. WATER METER SIZES SHALL BE DESIGNED BY ENGINEER OF RECORD AND SHALL BE CHECKED AND AUTHORIZED BY PALM BEACH COUNTY WATER UTILITIES.
14. PIPE DEFLECTION OF WATER MAIN AND FIRE MAIN SHALL NOT EXCEED MANUFACTURER'S RECOMMENDATIONS.
15. ALL GRAVITY SEWER MAINS SHALL BE PVC SDR-26 UNLESS OTHERWISE NOTED
16. ALL GRAVITY SEWER LATERALS SHALL BE PVC SDR-35 UNLESS OTHERWISE NOTED.
17. ALL SEWER FORCE MAIN (SFM) SHALL BE PVC C-900 DR-18 UNLESS OTHERWISE NOTED. ALL SEWER FORCE MAIN IS PRIVATE.
18. ANY VITRIFIED CLAY PIPE (VCP) DAMAGED BY NEW CONSTRUCTION OR CONNECTIONS SHALL BE REPLACED WITH NEW SANITARY SEWER MAIN PIPE.
19. SANITARY SEWER PIPE LENGTHS ARE MEASURED FROM CENTER OF MANHOLE TO CENTER OF MANHOLE. CONTRACTOR SHALL ADJUST LIMITS OF PVC TO DIP AS SHOWN IN PROFILE.
20. ALL SEWER LATERALS SHALL BE CONNECTED TO SEWER MAIN AND NOT DIRECTLY INTO SEWER MANHOLES.
21. EXISTING WATER MAIN AND SEWER MAIN SHALL BE REMOVED AFTER PROPOSED WATER MAIN AND/OR SEWER MAIN HAS BEEN TESTED AND ACCEPTED BY PALM BEACH COUNTY HEALTH DEPARTMENT AND EXISTING SERVICES HAVE BEEN RELOCATED.
22. PROPOSED WATER AND SEWER IMPROVEMENTS IN PRIVATE PROPERTY SHALL MEET PALM BEACH COUNTY HEALTH DEPARTMENT SEPARATION REQUIREMENTS, THESE CONFLICTS WILL BE ADDRESS DURING CONSTRUCTION AND WON'T AFFECT THE PUBLIC SAFETY.
23. CONTRACTOR SHALL COORDINATE UNDERGROUND ELECTRIC SERVICE CONNECTION WITH FPL FOR CONDUIT SIZE AND BURIED DEPTH REQUIREMENT.

## ADDITIONAL UTILITY NOTES

1. PALM BEACH COUNTY WATER UTILITIES DEPARTMENT MUST BE GIVEN AT LEAST 48 HOURS NOTIFICATION PRIOR TO ANY SHUT-DOWN AND/OR REMOVAL OF EXISTING WATER MAIN OR SANITARY SEWER LINES.
2. COUNTY MAINTAINED UTILITIES WILL NEED TO BE TESTED AND PROTECTED (IE. PAVED AT LEAST UP TO FIRST LIFT, IF NOT ROADWAY) PRIOR TO ISSUANCE OF CERTIFICATION OF OCCUPANCY.
3. LEAD FREE BRASS WATER WORKS PRODUCTS SHALL MEET THE REQUIREMENT OF ASNI/AWWA C800 AND THE MAXIMUM LEAD CONTENT OF S.3372 AND NSF 61 ANNEX G. THE MANUFACTURER'S DESIGNATION AS A LEAD FREE PRODUCT SHALL BE PERMANENTLY STAMPED OR CAST INTO THE PRODUCT'S BODY. EFFECTIVE JANUARY 1, 2013, ONLY LEAD FREE BRASS WATER WORKS PRODUCTS SHALL BE INSTALLED IN CONTACT WITH POTABLE WATER.
4. ALL PROPOSED BACKFLOW PREVENTERS AND DOUBLE DETECTOR CHECK VALVES SHALL BE USC CERTIFIED AND LEAD FREE.

PLANS ARE IN NAVD 1988 DATUM

Always call 811 two full business days before you dig to have underground utilities located and marked.

Sunshine811.com

THE PRESENCE OF GROUNDWATER SHOULD BE ANTICIPATED. CONTRACTOR'S BID SHALL INCLUDE CONSIDERATION FOR ADDRESSING THIS ISSUE AND OBTAINING ALL NECESSARY PERMITS.

| No. | REVISIONS | DATE | BY |
|---|---|---|---|

Kimley»Horn
© 2021 KIMLEY-HORN AND ASSOCIATES, INC.
1615 S. CONGRESS AVE, SUITE 201,
DELRAY BEACH, FL 33445
PHONE: 561-330-2345 FAX: 561-863-8175
WWW.KIMLEY-HORN.COM REGISTRY 696

LICENSED PROFESSIONAL
MICHAEL D. SPRUCE, P.E.
FLORIDA LICENSE NUMBER
52776
DATE: ———

| | |
|---|---|
| KHA PROJECT | 149658011 |
| DATE | JAN 2021 |
| SCALE | AS SHOWN |
| DESIGNED BY | YXY |
| DRAWN BY | YXY |
| CHECKED BY | MDS |

# UTILITY PLAN - OFFSITE

# FONTANA TOWNHOMES

PREPARED FOR
MERITAGE HOMES

VILLAGE OF PALM SPRINGS FLORIDA

SHEET NUMBER
C6.02

Plotted By: YL Yomoi Sheet Set: FONTANA TOWNHOMES Layout: C6.02 UTILITY PLAN – OFFSITE January 15, 2021 10:25:29am K:\bcd_civil\149658011 – davis road\CAD\xlconstruct\C6.00_UTILITY PLAN.dwg
This document, together with the concepts and designs presented herein, as an instrument of service, is intended only for the specific purpose and client for which it was prepared. Reuse of and improper reliance on this document without written authorization and adaptation by Kimley-Horn and Associates, Inc. shall be without liability to Kimley-Horn and Associates, Inc.

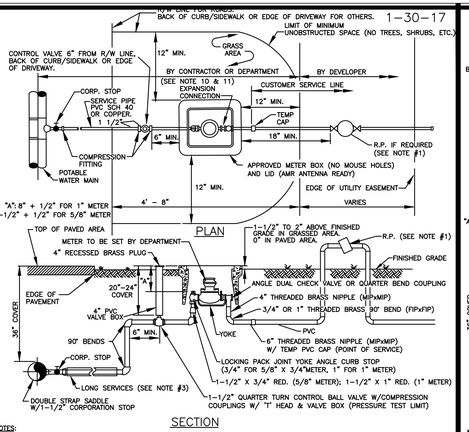


NOTES:

1. ALL NON-RESIDENTIAL SERVICES, SERVICES FOR ALL BUILDINGS OVER THREE STORIES, AND RESIDENTIAL SERVICES WITH INDIVIDUALLY METERED RECLAIMED WATER SERVICE TO HAVE AN APPROVED REDUCED PRESSURE PRINCIPLE BACKFLOW PREVENTION ASSEMBLY (R.P.). THE INITIAL TEST OF THE R.P. SHALL BE PERFORMED BY THE DEPARTMENT. THE R.P. SHALL BE INSTALLED AS CLOSE AS POSSIBLE TO THE POINT OF SERVICE.
2. 12" MINIMUM CLEARANCE TO BE MAINTAINED BETWEEN METER BOX AND ANY OBSTRUCTION.
3. FOR INSTALLATION OF SERVICES UNDER DRIVEWAYS AND ROADWAYS USE MIN. 3" DIAMETER BLACK IRON, PVC SCH 40, OR HDPE SDR 9 CASING. CASING SHALL EXTEND MIN. 24" BEYOND EDGE OF PAVEMENT. END OF CASING TO BE SEALED WITH FOAM SEALANT. CASING SHALL BE COLOR-CODED BLACK, WHITE, BLUE, OR BLUE STRIPED.
4. SUCCESSIVE TAPS INTO THE WATER MAIN SHALL BE SPACED A MINIMUM OF 18" APART. TAPS SPACED BETWEEN 18" AND 48" SHALL BE OFFSET TO EACH SIDE OF THE MAIN. TAPS ON THE SAME SIDE OF A PVC PIPE SECTION SHALL BE MIN. 10' APART.
5. METER SHALL NOT BE PLACED IN SIDEWALK OR DRIVEWAY AREAS. SERVICE LINES AND TAPS SHALL NOT BE PLACED UNDER DRIVEWAYS WHENEVER POSSIBLE.
6. COPPER SHALL BE "TYPE K" CONTINUOUS AND SUITABLE FOR UNDERGROUND SERVICE WITH FLARED CONNECTIONS. PVC SHALL BE SCH. 40 PIPE WITH SCH 80 PVC FITTINGS. ALL BRASS SHALL BE "LEAD FREE".
7. MAXIMUM SERVICE LENGTH IS 100' TO METER.
8. BEDDING (MIN. 4") AND COVER (MIN. 4") OVER SERVICE LINE OR CASING SHALL CONSIST OF FINE GRANULAR MATERIAL. UNSUITABLE IN-SITU MATERIALS SUCH AS MUCK, DEBRIS AND LARGER ROCKS SHALL BE REMOVED WITH 2" MAXIMUM SIZE.
9. METER/SERVICE WILL NOT BE INSTALLED/ACTIVATED UNTIL:
   A. – FORM BOARDS FOR DRIVEWAY AND/OR SIDEWALK ARE IN PLACE OR – DRIVEWAY OR SIDEWALK IS IN PLACE
   B. "MINIMUM UNOBSTRUCTED SPACE" (AS SHOWN) IS PROVIDED. (MIN 12" VERTICAL SEPARATION IS REQUIRED TO OTHER UTILITIES.)
   C. – THE REQUIRED BACKFLOW PREVENTION ASSEMBLY/DEVICE IS INSTALLED AND HAS PASSED THE INITIAL TEST.
10. METER TO BE SET BY THE DEPARTMENT.
11. THE DEVELOPER/PROPERTY OWNER OR ASSIGNEE SHALL BE RESPONSIBLE FOR INSTALLATION OF SERVICES BEYOND PRESSURE TEST LIMITS AS SPECIFIED BY THE DEPARTMENT.
12. THREADED AREAS OF CORPORATION STOP AND OTHER FITTINGS SHALL BE SPIRAL WRAPPED WITH TWO (2) WRAPS OF TEFLON TAPE.
13. METER BOXES IN NON-GRASS AREAS SHALL HAVE TRAFFIC RATED LIDS.
14. A 12" THICK COMPACTED 3/4" ROCK BASE IS REQUIRED FOR METER BOXES OUTSIDE OF GRASS AREA. THE BASE SHALL EXTEND MIN. 12" BEYOND THE METER BOX PERIMETER.

POTABLE WATER SERVICE SINGLE 5/8" X 3/4" & 1" METER INSTALLATION DETAIL (PVC) — 1W

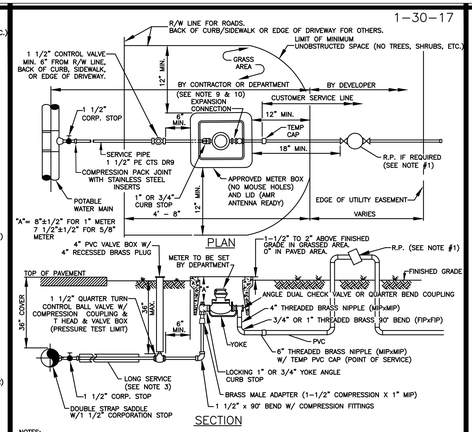


NOTES:

1. ALL NON-RESIDENTIAL SERVICES, SERVICES FOR ALL BUILDINGS OVER THREE STORIES, AND RESIDENTIAL SERVICES WITH INDIVIDUALLY METERED RECLAIMED WATER SERVICE TO HAVE AN APPROVED REDUCED PRESSURE PRINCIPLE BACKFLOW PREVENTION ASSEMBLY (R.P.). THE INITIAL TEST OF THE R.P. SHALL BE PERFORMED BY THE DEPARTMENT. THE R.P. SHALL BE INSTALLED AS CLOSE AS POSSIBLE TO THE POINT OF SERVICE.
2. 12" MINIMUM CLEARANCE TO BE MAINTAINED BETWEEN METER BOX AND ANY OBSTRUCTION.
3. FOR INSTALLATION OF SERVICES UNDER DRIVEWAYS AND ROADWAYS USE MIN. 3" DIAMETER BLACK IRON, PVC SCH 40 OR HDPE SDR 9 CASING. CASING SHALL EXTEND MIN. 24" BEYOND EDGE OF PAVEMENT. END OF CASING TO BE SEALED WITH FOAM SEALANT. CASING SHALL BE COLOR-CODED BLACK, WHITE, BLUE, OR BLUE STRIPED.
4. SUCCESSIVE TAPS INTO THE WATER MAIN SHALL BE SPACED A MINIMUM OF 18" APART. TAPS SPACED BETWEEN 18" AND 48" SHALL BE OFFSET TO EACH SIDE OF THE MAIN. TAPS ON THE SAME SIDE OF A PVC PIPE SECTION SHALL BE MIN. 10' APART.
5. METER SHALL NOT BE PLACED IN SIDEWALK OR DRIVEWAY AREAS. SERVICE LINES AND TAPS SHALL NOT BE PLACED UNDER DRIVEWAYS WHENEVER POSSIBLE.
6. MAXIMUM SERVICE LENGTH IS 100' TO METER.
7. BEDDING (MIN. 4") AND COVER (MIN. 4") OVER SERVICE LINE OR CASING SHALL CONSIST OF FINE GRANULAR MATERIAL. UNSUITABLE IN-SITU MATERIALS SUCH AS MUCK, DEBRIS AND LARGER ROCKS SHALL BE REMOVED WITH 2" MAXIMUM SIZE.
8. METER/SERVICE WILL NOT BE INSTALLED/ACTIVATED UNTIL:
   A. – FORM BOARDS FOR DRIVEWAY AND/OR SIDEWALK ARE IN PLACE OR – DRIVEWAY OR SIDEWALK IS IN PLACE
   B. "MINIMUM UNOBSTRUCTED SPACE" (AS SHOWN) IS PROVIDED. (MIN 12" VERTICAL SEPARATION IS REQUIRED TO OTHER UTILITIES.)
   C. – THE REQUIRED BACKFLOW PREVENTION ASSEMBLY/DEVICE IS INSTALLED AND HAS PASSED THE INITIAL TEST.
9. METER TO BE SET BY THE DEPARTMENT.
10. THE DEVELOPER/PROPERTY OWNER OR ASSIGNEE SHALL BE RESPONSIBLE FOR INSTALLATION OF SERVICES BEYOND PRESSURE TEST LIMITS AS SPECIFIED BY THE DEPARTMENT.
11. THREADED AREAS OF CORPORATION STOP AND OTHER FITTINGS SHALL BE SPIRAL WRAPPED WITH TWO (2) WRAPS OF TEFLON TAPE. ALL BRASS SHALL BE "LEAD FREE".
12. METER BOXES IN NON-GRASS AREAS SHALL HAVE TRAFFIC RATED LIDS.
13. A 12" THICK COMPACTED 3/4" ROCK BASE IS REQUIRED FOR METER BOXES OUTSIDE OF GRASS AREA. THE BASE SHALL EXTEND MIN. 12" BEYOND THE METER BOX PERIMETER.
14. STAINLESS STEEL INSERTS ARE REQUIRED FOR ALL COMPRESSION FITTINGS.

POTABLE WATER SERVICE SINGLE 5/8" X 3/4" & 1" METER INSTALLATION DETAIL (POLYETHYLENE) — 2W

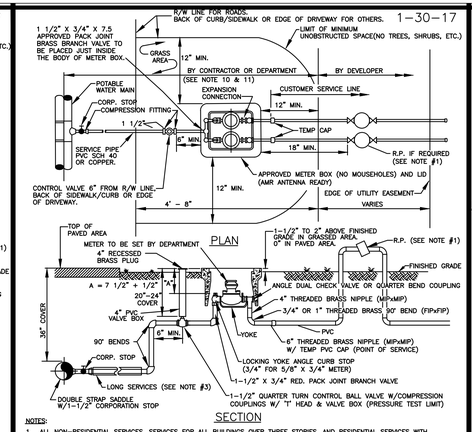


NOTES:

1. ALL NON-RESIDENTIAL SERVICES, SERVICES FOR ALL BUILDINGS OVER THREE STORIES, AND RESIDENTIAL SERVICES WITH INDIVIDUALLY METERED RECLAIMED WATER SERVICE TO HAVE AN APPROVED REDUCED PRESSURE PRINCIPLE BACKFLOW PREVENTION ASSEMBLY (R.P.). THE INITIAL TEST OF THE R.P. SHALL BE PERFORMED BY THE DEPARTMENT. THE R.P. SHALL BE INSTALLED AS CLOSE AS POSSIBLE TO THE POINT OF SERVICE.
2. 12" MINIMUM CLEARANCE TO BE MAINTAINED BETWEEN METER BOX AND ANY OBSTRUCTION.
3. FOR INSTALLATION OF SERVICES UNDER DRIVEWAYS AND ROADWAYS USE MIN. 3" DIAMETER BLACK IRON, PVC SCH 40 OR HDPE SDR 9 CASING. CASING SHALL EXTEND MIN. 24" BEYOND EDGE OF PAVEMENT. END OF CASING TO BE SEALED WITH FOAM SEALANT. CASING SHALL BE COLOR-CODED BLACK, WHITE, BLUE, OR BLUE STRIPED.
4. SUCCESSIVE TAPS INTO THE WATER MAIN SHALL BE SPACED A MINIMUM OF 18" APART. TAPS SPACED BETWEEN 18" AND 48" SHALL BE OFFSET TO EACH SIDE OF THE MAIN. TAPS ON THE SAME SIDE OF A PVC PIPE SECTION SHALL BE MIN. 10' APART.
5. METER SHALL NOT BE PLACED IN SIDEWALK OR DRIVEWAY AREAS. SERVICE LINES AND TAPS SHALL NOT BE PLACED UNDER DRIVEWAYS WHENEVER POSSIBLE.
6. MAXIMUM SERVICE LENGTH IS 100' TO METER.
7. BEDDING (MIN. 4") AND COVER (MIN. 4") OVER SERVICE LINE OR CASING SHALL CONSIST OF FINE GRANULAR MATERIAL. UNSUITABLE IN-SITU MATERIALS SUCH AS MUCK, DEBRIS AND LARGER ROCKS SHALL BE REMOVED WITH 2" MAXIMUM SIZE.
8. METER/SERVICE WILL NOT BE INSTALLED/ACTIVATED UNTIL:
   A. – FORM BOARDS FOR DRIVEWAY AND/OR SIDEWALK ARE IN PLACE OR – DRIVEWAY OR SIDEWALK IS IN PLACE
   B. "MINIMUM UNOBSTRUCTED SPACE" (AS SHOWN) IS PROVIDED. (MIN 12" VERTICAL SEPARATION IS REQUIRED TO OTHER UTILITIES.)
   C. – THE REQUIRED BACKFLOW PREVENTION ASSEMBLY/DEVICE IS INSTALLED AND HAS PASSED THE INITIAL TEST.
9. METER TO BE SET BY THE DEPARTMENT.
10. THE DEVELOPER/PROPERTY OWNER OR ASSIGNEE SHALL BE RESPONSIBLE FOR INSTALLATION OF SERVICES BEYOND PRESSURE TEST LIMITS AS SPECIFIED BY THE DEPARTMENT.
11. THREADED AREAS OF CORPORATION STOP AND OTHER FITTINGS SHALL BE SPIRAL WRAPPED WITH TWO (2) WRAPS OF TEFLON TAPE. ALL BRASS SHALL BE "LEAD FREE".
12. METER BOXES IN NON-GRASS AREAS SHALL HAVE TRAFFIC RATED LIDS.
13. A 12" THICK COMPACTED 3/4" ROCK BASE IS REQUIRED FOR METER BOXES OUTSIDE OF GRASS AREA. THE BASE SHALL EXTEND MIN. 12" BEYOND THE METER BOX PERIMETER.
14. A 12" THICK COMPACTED 3/4" ROCK BASE IS REQUIRED FOR METER BOX PERIMETER.

POTABLE WATER SERVICE DUAL 5/8" X 3/4" METER INSTALLATION DETAIL (PVC) — 3W

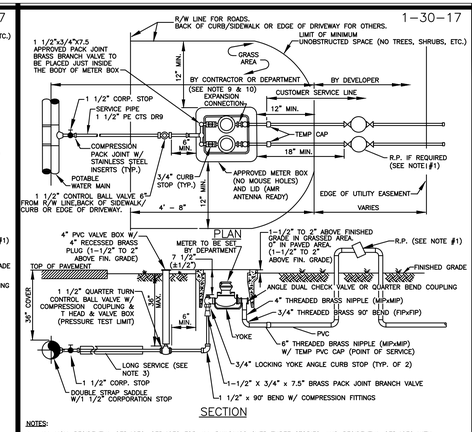


NOTES:

1. ALL NON-RESIDENTIAL SERVICES, SERVICES FOR ALL BUILDINGS OVER THREE STORIES, AND RESIDENTIAL SERVICES WITH INDIVIDUALLY METERED RECLAIMED WATER SERVICE TO HAVE AN APPROVED REDUCED PRESSURE PRINCIPLE BACKFLOW PREVENTION ASSEMBLY (R.P.). THE INITIAL TEST OF THE R.P. SHALL BE PERFORMED BY THE DEPARTMENT. THE R.P. SHALL BE INSTALLED AS CLOSE AS POSSIBLE TO THE POINT OF SERVICE.
2. 12" MINIMUM CLEARANCE TO BE MAINTAINED BETWEEN METER BOX AND ANY OBSTRUCTION.
3. FOR INSTALLATION OF SERVICES UNDER DRIVEWAYS AND ROADWAYS USE MIN. 3" DIAMETER BLACK IRON, PVC SCH 40 OR HDPE SDR 9 CASING. CASING SHALL EXTEND MIN. 24" BEYOND EDGE OF PAVEMENT. END OF CASING TO BE SEALED WITH FOAM SEALANT. CASING SHALL BE COLOR-CODED BLACK, WHITE, BLUE, OR BLUE STRIPED.
4. SUCCESSIVE TAPS INTO THE WATER MAIN SHALL BE SPACED A MINIMUM OF 18" APART. TAPS SPACED BETWEEN 18" AND 48" SHALL BE OFFSET TO EACH SIDE OF THE MAIN. TAPS ON THE SAME SIDE OF A PVC PIPE SECTION SHALL BE MIN. 10' APART.
5. METER SHALL NOT BE PLACED IN SIDEWALK OR DRIVEWAY AREAS. SERVICE LINES AND TAPS SHALL NOT BE PLACED UNDER DRIVEWAYS WHENEVER POSSIBLE.
6. MAXIMUM SERVICE LENGTH IS 100' TO METER.
7. BEDDING (MIN. 4") AND COVER (MIN. 4") OVER SERVICE LINE OR CASING SHALL CONSIST OF FINE GRANULAR MATERIAL. UNSUITABLE IN-SITU MATERIALS SUCH AS MUCK, DEBRIS AND LARGER ROCKS SHALL BE REMOVED WITH 2" MAXIMUM SIZE.
8. METER/SERVICE WILL NOT BE INSTALLED/ACTIVATED UNTIL:
   A. – FORM BOARDS FOR DRIVEWAY AND/OR SIDEWALK ARE IN PLACE OR – DRIVEWAY OR SIDEWALK IS IN PLACE
   B. "MINIMUM UNOBSTRUCTED SPACE" (AS SHOWN) IS PROVIDED. (MIN 12" VERTICAL SEPARATION IS REQUIRED TO OTHER UTILITIES.)
   C. – THE REQUIRED BACKFLOW PREVENTION ASSEMBLY/DEVICE IS INSTALLED AND HAS PASSED THE INITIAL TEST.
9. METER TO BE SET BY THE DEPARTMENT.
10. THE DEVELOPER/PROPERTY OWNER OR ASSIGNEE SHALL BE RESPONSIBLE FOR INSTALLATION OF SERVICES BEYOND PRESSURE TEST LIMITS AS SPECIFIED BY THE DEPARTMENT.
11. THREADED AREAS OF CORPORATION STOP AND OTHER FITTINGS SHALL BE SPIRAL WRAPPED WITH TWO (2) WRAPS OF TEFLON TAPE. ALL BRASS SHALL BE "LEAD FREE".
12. METER BOXES IN NON-GRASS AREAS SHALL HAVE TRAFFIC RATED LIDS.
13. A 12" THICK COMPACTED 3/4" ROCK BASE IS REQUIRED FOR METER BOXES OUTSIDE OF GRASS AREA. THE BASE SHALL EXTEND MIN. 12" BEYOND THE METER BOX PERIMETER.
14. STAINLESS STEEL INSERTS ARE REQUIRED FOR ALL COMPRESSION FITTINGS.

POTABLE WATER SERVICE DUAL 5/8" X 3/4" METER INSTALLATION DETAIL (POLYETHYLENE) — 4W

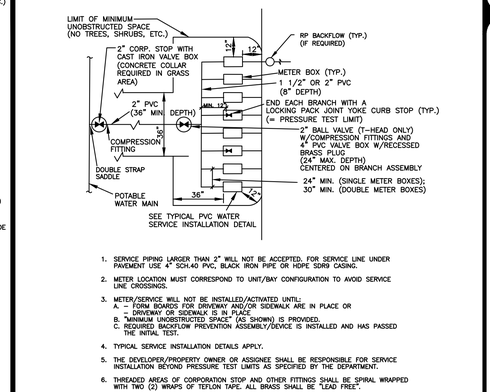


1. SERVICE PIPING LARGER THAN 2" WILL NOT BE ACCEPTED. FOR SERVICE LINE UNDER PAVEMENT USE 4" SCH.40 PVC, BLACK IRON PIPE OR HDPE SDR9 CASING.
2. METER LOCATION MUST CORRESPOND TO UNIT/BAY CONFIGURATION TO AVOID SERVICE LINE CROSSINGS.
3. METER/SERVICE WILL NOT BE INSTALLED/ACTIVATED UNTIL:
   A. – FORM BOARDS FOR DRIVEWAY AND/OR SIDEWALK ARE IN PLACE OR – DRIVEWAY OR SIDEWALK IS IN PLACE
   B. "MINIMUM UNOBSTRUCTED SPACE" (AS SHOWN) IS PROVIDED.
   C. REQUIRED BACKFLOW PREVENTION ASSEMBLY/DEVICE IS INSTALLED AND HAS PASSED THE INITIAL TEST.
4. TYPICAL SERVICE INSTALLATION DETAILS APPLY.
5. THE DEVELOPER/PROPERTY OWNER OR ASSIGNEE SHALL BE RESPONSIBLE FOR SERVICE INSTALLATION BEYOND PRESSURE TEST LIMITS AS SPECIFIED BY THE DEPARTMENT.
6. THREADED AREAS OF CORPORATION STOP AND OTHER FITTINGS SHALL BE SPIRAL WRAPPED WITH TWO (2) WRAPS OF TEFLON TAPE. ALL BRASS SHALL BE "LEAD FREE".
7. MAX. (8) 5/8" METERS OR MAX. (4) 1" METERS MAY BE CONNECTED TO A SINGLE 2" SERVICE LINE.
8. PLEASE NOTE THAT ADDITIONAL UNOBSTRUCTED SPACE WILL BE REQUIRED FOR THE INSTALLATION OF A BACKFLOW PREVENTERS (IF REQUIRED).

POTABLE WATER TYPICAL CONNECTION FOR MULTIPLE SERVICES — 5W

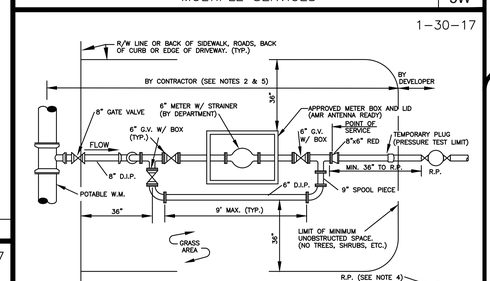


NOTES:

1. ALL SERVICE PIPING SHALL BE 4" DUCTILE IRON WITH 4" GATE VALVES WITH VALVE BOXES AND CONCRETE COLLARS (IF APPLICABLE).
2. ONLY APPROVED METER BOXES SHALL BE USED. THE BOX SHALL BE PROVIDED BY CUSTOMER AND PLACED ABOVE GROUND NEAR THE METER LOCATION. PROPERTY OWNER SHALL EXCAVATE THE METER BOX AREA, EXPOSE THE BYPASS PIPING, THEN INSTALL THE BOX AND BACKFILL THE AREA AFTER METER INSTALLATION.
3. APPROVED RESTRAINED FLANGED ADAPTERS ARE REQUIRED. PLACE 4"x3" FLANGED REDUCERS AS SHOWN ON DETAIL.
4. ALL SERVICES TO HAVE AN APPROVED REDUCED PRESSURE PRINCIPLE BACKFLOW PREVENTION ASSEMBLY (R.P.). THE INITIAL TEST OF THE R.P. SHALL BE PERFORMED BY THE DEPARTMENT. THE R.P. SHALL BE INSTALLED AS CLOSE AS POSSIBLE TO THE POINT OF SERVICE.
5. WATER METER SHALL BE INSTALLED BY THE DEPARTMENT. LAYING LENGTH OF THE METER TO BE CONFIRMED PRIOR TO SERVICE INSTALLATION.
6. SERVICE COMPONENTS SHALL BE CONSTRUCTED FOR THE METER TO BE INSTALLED "TRUE" AND "PLUMB" AND TO ALLOW METER READING THROUGH THE METER READER LID.
7. THE ENTIRE ASSEMBLY (WITHOUT METER/SPOOL PIECES AS SHOWN) SHALL BE PRESSURE TESTED AS REQUIRED.
8. METER/SERVICE WILL NOT BE INSTALLED/ACTIVATED UNTIL:
   A. – FORM BOARDS FOR DRIVEWAY AND/OR SIDEWALK ARE IN PLACE OR – DRIVEWAY OR SIDEWALK IS IN PLACE
   B. "MINIMUM UNOBSTRUCTED SPACE" (AS SHOWN) IS PROVIDED. MIN. 12" VERTICAL SEPARATION IS REQUIRED TO OTHER UTILITIES.
   C. REQUIRED BACKFLOW PREVENTION ASSEMBLY IS INSTALLED AND HAS PASSED THE INITIAL TEST.
9. BYPASS PIPING SHALL BE INSTALLED ON THE RIGHT SIDE OF METER IN DIRECTION OF FLOW UNLESS OTHERWISE APPROVED BY COUNTY.
10. ALL HARDWARE FOR FLANGED CONNECTIONS (BOLTS, ETC.) TO BE STAINLESS STEEL.
11. METER BOXES IN NON-GRASS AREAS SHALL HAVE TRAFFIC RATED LIDS.
12. A 4" THICK COMPACTED 3/4" ROCK BASE IS REQUIRED. THE BASE SHALL EXTEND MINIMUM 12" BEYOND THE METER BOX PERIMETER.

POTABLE WATER 6" METER INSTALLATION — 10W

POTABLE WATER #1
STANDARD DETAILS

CONSULTANT:
Kimley»Horn

IT'S THE LAW! CALL 48 HOURS BEFORE YOU DIG 1-800-432-4770 SUNSHINE STATE ONE CALL OF FLORIDA, INC. UTILITIES NOTIFICATION CENTER

DESIGNED BY: WUD
DRAWN BY: WUD CADD
CHECKED BY: A. GALICKI
APPROVED BY: WUD

MICHAEL D. SPRUCE, P.E.
52776

Palm Beach County
Water Utilities Department
P.O.Box 16097
West Palm Beach, FL 33416-6097

Jan 15, 2021

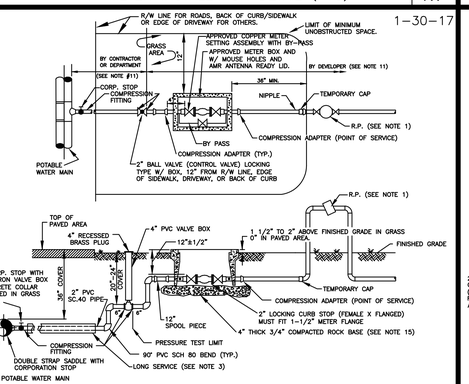


NOTES:

1. ALL SERVICES TO HAVE AN APPROVED REDUCED PRESSURE PRINCIPLE BACKFLOW PREVENTION ASSEMBLY (R.P.). THE INITIAL TEST OF THE R.P. SHALL BE PERFORMED BY THE DEPARTMENT. THE R.P. SHALL BE INSTALLED AS CL

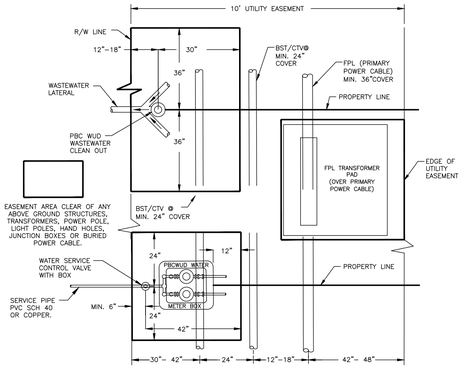


PLAN (N.T.S.)

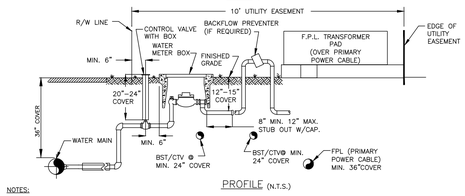


PROFILE (N.T.S.)

NOTES:

1. THE DETAIL WAS DEVELOPED IN COLLABORATION WITH UTILITY COMPANIES SUPPLYING VARIOUS UTILITY SERVICES TO P.B.C.W.U.D. CUSTOMERS.
2. THE DIMENSIONS SHOWN SHALL SERVE AS A GENERAL GUIDELINE TO INSTALL UTILITIES WITHIN A 10' WIDE UTILITY EASEMENT PARALLELING A RIGHT-OF-WAY.
3. THE PARTICIPATING UTILITIES PLEDGE TO OBSERVE, FOLLOW, AND ENFORCE THE INSTALLATION PARAMETERS SHOWN ON THIS DETAIL.

## TYPICAL UTILITY INSTALLATION DETAIL IN A 10' UTILITY EASEMENT ADJACENT TO R/W ✳ 11W

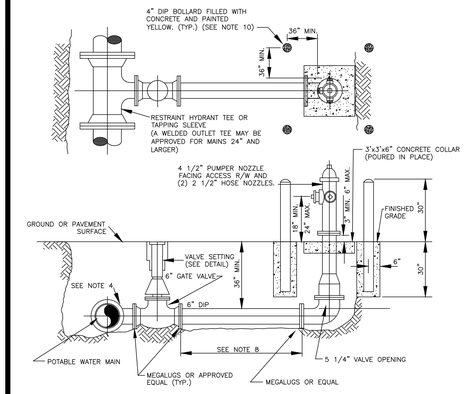


NOTES:

1. HYDRANT SHALL BE INSTALLED PLUMB AND TRUE IN UNOBSTRUCTED LOCATION AND SHALL NOT INTERFERE WITH PEDESTRIAN WALKWAYS, BIKEPATHS, ETC. (MIN. 7.5' FEET CLEARANCE ON ALL SIDES).
2. THE SAME MODEL HYDRANT SHALL BE USED THROUGHOUT CURRENT CONTRACT PHASE. HYDRANTS MUST BE ORDERED RED IN COLOR, WITH FINISHED EPOXY COAT APPLIED BY THE HYDRANT MANUFACTURER. HYDRANT SHALL BE FACTORY EQUIPPED WITH PLUGGED DRAIN HOLES.
3. VALVE SHALL BE PLACED ADJACENT TO MAIN AND RESTRAINED WITH MEGALUGS OR EQUAL.
4. HYDRANT TEES ARE PREFERRED.
5. ALL HYDRANTS SHALL BE TEE'D OFF OF MAINS
6. HYDRANTS SHALL NOT BE PLACED IN SIDEWALKS, ROADWAYS, OR BIKEPATHS.
7. FIRE HYDRANT SHALL BE LOCATED 5' MIN. FROM EDGE OF PAVEMENT WITH RAISED CURBING.
8. ON RUNS LONGER THAN 60 FEET ANOTHER VALVE IS REQUIRED LESS THAN ONE PIPE JOINT OF THE HYDRANT.
9. PAINT SAFETY RED, IF REQUIRED, WITH APPROVED PAINT.
10. BOLLARDS MAY BE REQUIRED FOR HYDRANTS WITH LESS THAN 7 FEET TO EDGE OF PAVEMENT (WITHOUT RAISED CURBING). NO BOLLARDS SHALL BE INSTALLED IN COUNTY RIGHT-OF-WAY "CLEAR ZONE".
11. BURIED HYDRANT HARDWARE SHALL BE STAINLESS STEEL (TYPE 304L OR TYPE 304 BOLTS/TYPE 304 NUTS).
12. NO CONNECTION (TEE, TAP) IS ALLOWED BETWEEN THE HYDRANT CONTROL VALVE AND THE FIRE HYDRANT.
13. APPROVED SECURITY CAPS WITH CHAINS ARE REQUIRED FOR ALL NOZZLES.

## TYPICAL FIRE HYDRANT INSTALLATION WITH BOLLARDS DETAIL ✳ 12W

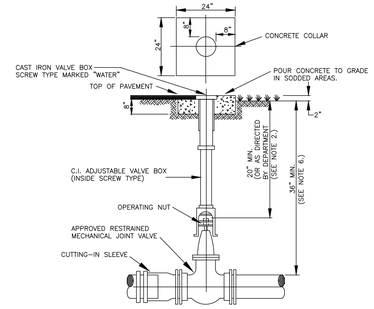


NOTES:

1. CONCRETE COLLAR IS NOT REQUIRED IN PAVED AREAS IF PAVEMENT SURFACE IS FINISHED PRIOR TO CONDITIONAL FINAL INSPECTION.
2. WHEN OPERATING NUT IS DEEPER THAN 36" A ONE PIECE EXTENSION WILL BE REQUIRED TO BRING OPERATING NUT 20"-30" BELOW FINISHED GRADE. EXTENSION BOLTS & NUTS ARE TO BE STAINLESS STEEL. A HIGH STRENGTH STEEL CENTERING PLATE, WELDED TO THE EXTENSION, IS ALSO REQUIRED.
3. VALVE BOXES SHALL HAVE COVERS MARKED "WATER".
4. VALVE BOX EXTENSION TO BE D.I.P. OR C-900 PVC SDR 18 (BLUE)
5. A CUT-IN INSTALLATION SHALL REQUIRE MEGALUGS OR EQUAL THROUGHOUT ASSEMBLY.
6. IN ORDER TO MAINTAIN ADEQUATE COVER OVER VALVE NUT, THE FOLLOWING MINIMUM COVERS OVER PIPE ARE REQUIRED

| GATE VALVE SIZE | MIN. COVER OVER PIPE |
|---|---|
| 16" | 48" |
| 20" | 54" |
| 24" | 60" |
| 30" | 72" |
| 36" | 84" |

7. VALVES IN ROADWAYS SHALL BE LOCATED OUTSIDE OF WHEEL PATHS WHENEVER POSSIBLE.

## POTABLE WATER MAIN TYPICAL GATE VALVE SETTING AND MAIN CUT-IN DETAIL 13W

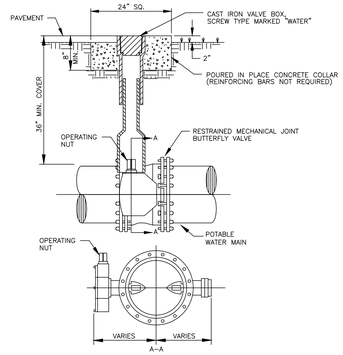


NOTES:

1. CONCRETE COLLAR IS NOT REQUIRED IN PAVED AREAS IF PAVEMENT SURFACE IS FINISHED PRIOR TO CONDITIONAL FINAL INSPECTION.
2. WHEN TOP OF OPERATING NUT IS DEEPER THAN 42" AN EXTENSION WILL BE REQUIRED TO BRING OPERATING NUT 24"-30" BELOW FINISHED GRADE. EXTENSION BOLTS & NUTS ARE TO BE STAINLESS STEEL. A HIGH STRENGTH STEEL CENTERING PLATE, WELDED TO THE EXTENSION, IS ALSO REQUIRED.
3. VALVE BOXES SHALL HAVE COVERS MARKED "WATER".
4. A CUT-IN INSTALLATION SHALL REQUIRE MEGALUGS OR EQUAL THROUGHOUT ASSEMBLY.
5. EXTENSION VALVE BOX TO BE D.I.P. OR C-900 PVC DR 18 (COLOR: BLUE)
6. VALVES IN ROADWAYS SHALL BE LOCATED OUTSIDE OF WHEEL PATHS WHENEVER POSSIBLE.

## POTABLE WATER MAIN TYPICAL BUTTERFLY VALVE SETTING 14W

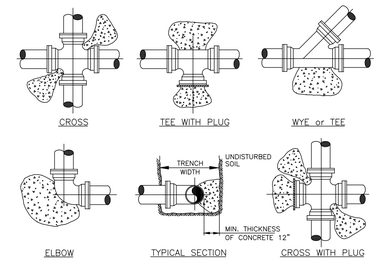


| PIPE | THRUST BLOCK AREA REQ'D | REMARKS | NOTE: |
|---|---|---|---|
| 4" | 2.0 SQ. FT. | VALUES ARE FOR 90° BEND, BASED ON 2000 P.S.F. SAFE BEARING LOAD AND PIPE PRESSURE OF 150 P.S.I. FOR OTHER SOILS & PRESSURES THE AREA REQUIRED IS IN DIRECT PROPORTION | FOR OTHER FITTINGS USE THE FOLLOWING FACTORS, TEE 100% 45° BEND 71% 22 1/2° BEND 39% 11 1/4° BEND 20% DEAD END 100% |
| 6" | 4.0 SQ. FT. | | |
| 8" | 6.6 SQ. FT. | | |
| 10" | 10.0 SQ. FT. | | |
| 12" | 14.0 SQ. FT. | | |
| 14" | 18.6 SQ. FT. | | |

NOTES:

1. CONCRETE THRUST BLOCKS OR THRUST COLLARS MAY BE UTILIZED ONLY IF NECESSARY FOR CONNECTIONS TO AN EXISTING PIPING SYSTEM, OTHERWISE MECHANICAL RESTRAINTS SHALL BE USED. KEEP "T" BOLTS CLEAR OF CONCRETE, WRAPPED IN VISQUEEN FOR FUTURE ACCESS, WITH A MINIMUM OF 1" THICKNESS BETWEEN THE FITTING AND SOIL.
2. BEFORE POURING CONCRETE, PLUGS SHALL BE WRAPPED WITH VISQUEEN AND A BOARD PLACED IN FRONT.
3. CONCRETE SHALL BE 2500 P.S.I. MINIMUM.
4. THE ENGINEER OF RECORD SHALL SUBMIT A THRUST BLOCK SIZE CALCULATION FOR TEE CONNECTIONS INTO UNRESTRAINED EXISTING MAINS LARGER THAN 14".
5. THE ENGINEER OF RECORD SHALL SUBMIT A PIPE RESTRAINT DESIGN FOR INLINE EXTENSIONS OF A EXISTING UNRESTRAINED MAIN IF MECHANICAL JOINT RESTRAINT CAN NOT BE INSTALLED ON THE EXISTING MAIN.

## TYPICAL THRUST BLOCKS FOR PRESSURE PIPE 20W

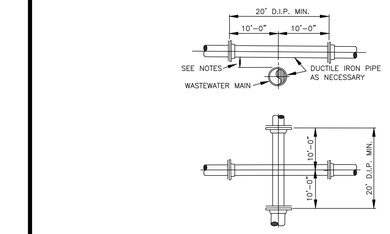


NOTES:

1. STORM SEWER, GRAVITY WASTEWATER AND RECLAIMED WATER MAIN CROSSING UNDER POTABLE WATER MAINS SHALL BE LAID TO PROVIDE A MINIMUM VERTICAL DISTANCE OF TWELVE (12) INCHES BETWEEN THE INVERT OF THE UPPER PIPE AND THE CROWN OF THE LOWER PIPE. WHERE THIS MINIMUM SEPARATION CANNOT BE MAINTAINED, THE CROSSING SHALL BE ARRANGED SO THAT THE STORM/WASTEWATER/RECLAIMED WATER PIPE JOINTS AND POTABLE WATER MAIN JOINTS ARE EQUIDISTANT FROM THE POINT OF CROSSING WITH NO LESS THAN TEN (10) FEET BETWEEN ANY TWO JOINTS, BOTH PIPES SHALL BE D.I.P., AND THE MINIMUM VERTICAL SEPARATION SHALL BE 6 INCHES. WHERE THERE IS NO ALTERNATIVE TO STORM/WASTEWATER/RECLAIMED WATER PIPES CROSSING OVER A POTABLE WATER MAIN, THE CRITERIA FOR MINIMUM 12" VERTICAL SEPARATION BETWEEN LINES AND JOINT ARRANGEMENT, AS STATED ABOVE, SHALL BE REQUIRED, AND BOTH PIPES SHALL BE D.I.P. IRRESPECTIVE OF SEPARATION. D.I.P. IS NOT REQUIRED FOR STORM SEWERS.
2. WHENEVER POSSIBLE MAINTAIN MIN. TEN (10) FEET HORIZONTAL DISTANCE (WALL TO WALL) BETWEEN POTABLE WATER MAIN AND STORM SEWER, WASTEWATER MAIN, OR FORCE MAIN (A MIN. 6' SEPARATION MAY BE APPROVED ON A CASE BY CASE BASIS). MAINTAIN MIN. THREE (3) FEET HORIZONTAL DISTANCE (WALL TO WALL) BETWEEN RECLAIMED WATER MAIN AND POTABLE WATER MAIN, STORM SEWER, WASTEWATER GRAVITY MAIN OR FORCE MAIN.
3. FORCE MAIN CROSSING POTABLE WATER MAIN OR RECLAIMED WATER MAIN SHALL BE LAID TO PROVIDE A MINIMUM VERTICAL DISTANCE OF TWELVE (12) INCHES BETWEEN THE OUTSIDE OF THE FORCE MAIN AND OUTSIDE OF THE POTABLE WATER MAIN OR RECLAIMED WATER MAIN WITH THE POTABLE WATER MAIN OR RECLAIMED WATER MAIN CROSSING OVER THE FORCE MAIN.
4. WASTEWATER LATERALS SHALL CROSS UNDER POTABLE WATER MAINS WITH A MIN. 12" VERTICAL SEPARATION WHENEVER POSSIBLE. WHERE THIS MINIMUM SEPARATION CANNOT BE MAINTAINED, A 20' SECTION OF DUCTILE IRON PIPE POTABLE WATER MAIN CENTERED ON THE CROSSING IS REQUIRED AND THE MINIMUM VERTICAL SEPARATION SHALL BE 6". WHERE THERE IS NO ALTERNATIVE TO A WASTEWATER LATERAL PIPE CROSSING OVER A POTABLE WATER MAIN, A MINIMUM 12" VERTICAL SEPARATION IS REQUIRED, THE LATERAL SHALL BE P.V.C. C-900 SDR18 OR BETTER, THE POTABLE WATER MAIN SHALL BE D.I.P. AND THE PIPE JOINTS SHALL BE EQUIDISTANT FROM THE POINT OF CROSSING.
5. POTABLE WATER SERVICE LINES SHALL CROSS OVER WASTEWATER MAINS WITH MIN. 12" VERTICAL SEPARATION. WHERE THIS MIN. SEPARATION CAN NOT BE MAINTAINED, THE WATER SERVICE SHALL BE ENCASED IN A MIN. 10' LONG CASING CENTERED OVER THE CROSSING WITH MIN. 6" VERTICAL SEPARATION.
6. WASTEWATER MAINS, WATER MAINS, STORM PIPES AND OTHER UTILITY PIPES SHALL CROSS PERPENDICULAR WHENEVER POSSIBLE.

## POTABLE WATER, WASTEWATER MAIN AND STORM SEWER CONFLICT 18W

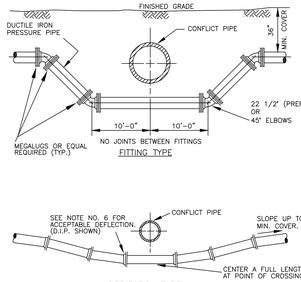


NOTES:

1. STORM SEWER, GRAVITY WASTEWATER AND RECLAIMED WATER MAIN CROSSING UNDER POTABLE WATER MAINS SHALL BE LAID TO PROVIDE A MINIMUM VERTICAL DISTANCE OF TWELVE (12) INCHES BETWEEN THE INVERT OF THE UPPER PIPE AND THE CROWN OF THE LOWER PIPE. WHERE THIS MINIMUM SEPARATION CANNOT BE MAINTAINED, THE CROSSING SHALL BE ARRANGED SO THAT THE STORM/WASTEWATER/RECLAIMED WATER PIPE JOINTS AND POTABLE WATER MAIN JOINTS ARE EQUIDISTANT FROM THE POINT OF CROSSING WITH NO LESS THAN TEN (10) FEET BETWEEN ANY TWO JOINTS, BOTH PIPES SHALL BE D.I.P., AND THE MINIMUM VERTICAL SEPARATION SHALL BE 6 INCHES. WHERE THERE IS NO ALTERNATIVE TO STORM/WASTEWATER/RECLAIMED WATER PIPES CROSSING OVER A POTABLE WATER MAIN, THE CRITERIA FOR MINIMUM 12" VERTICAL SEPARATION BETWEEN LINES AND JOINT ARRANGEMENT, AS STATED ABOVE, SHALL BE REQUIRED, AND BOTH PIPES SHALL BE D.I.P. IRRESPECTIVE OF SEPARATION. D.I.P. IS NOT REQUIRED FOR STORM SEWERS.
2. WHENEVER POSSIBLE MAINTAIN MIN. TEN (10) FEET HORIZONTAL DISTANCE (WALL TO WALL) BETWEEN POTABLE WATER MAIN AND STORM SEWER, WASTEWATER MAIN, OR FORCE MAIN (A MIN. 6' SEPARATION MAY BE APPROVED ON A CASE BY CASE BASIS.) MAINTAIN MIN. THREE (3) FEET HORIZONTAL DISTANCE (WALL TO WALL) BETWEEN RECLAIMED WATER MAIN AND POTABLE WATER MAIN, STORM SEWER, WASTEWATER GRAVITY MAIN OR FORCE MAIN.
3. FORCE MAIN CROSSING POTABLE WATER MAIN OR RECLAIMED WATER MAIN SHALL BE LAID TO PROVIDE A MINIMUM VERTICAL DISTANCE OF TWELVE (12) INCHES BETWEEN THE OUTSIDE OF THE FORCE MAIN AND OUTSIDE OF THE POTABLE WATER MAIN OR RECLAIMED WATER MAIN WITH THE POTABLE WATER MAIN OR RECLAIMED WATER MAIN CROSSING OVER THE FORCE MAIN.
4. FITTINGS SHALL BE RESTRAINED.
5. THE DEFLECTION TYPE CROSSING IS PREFERRED.
6. DO NOT EXCEED 75% OF MANUFACTURER'S RECOMMENDED MAXIMUM JOINT DEFLECTION FOR DUCTILE IRON PIPE. PVC PIPE CURVATURE MAY ONLY BE ACCOMPLISHED BY INSTALLING APPROPRIATE BENDS.
7. ALL EXPOSED TIE STEEL SHALL BE COATED WITH COAL-TAR EPOXY.
8. POTABLE WATER SERVICE LINES SHALL CROSS OVER WASTEWATER MAINS WITH MIN. 12" VERTICAL SEPARATION. WHERE THIS MIN. SEPARATION CAN NOT BE MAINTAINED, THE WATER SERVICE SHALL BE ENCASED IN A MIN. 10' LONG CASING CENTERED OVER THE CROSSING WITH MIN. 6" VERTICAL SEPARATION.
9. WASTEWATER MAINS, WATER MAINS, STORM PIPES AND OTHER UTILITY PIPES SHALL CROSS PERPENDICULAR WHENEVER POSSIBLE.

## POTABLE WATER MAIN / FORCE MAIN PRESSURE PIPE CONFLICT DETAIL 19W

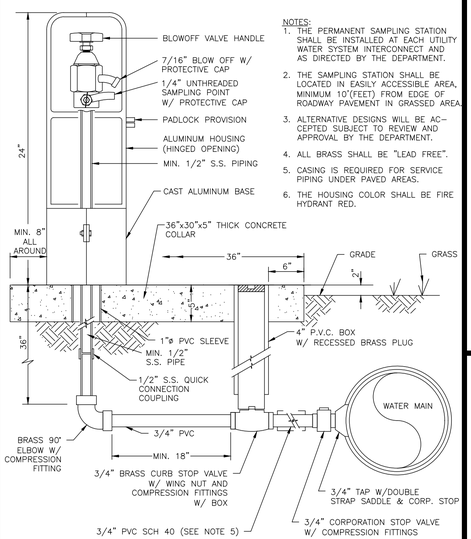


NOTES:

1. THE PERMANENT SAMPLING STATION SHALL BE INSTALLED AT EACH UTILITY WATER SYSTEM INTERCONNECT AND AS DIRECTED BY THE DEPARTMENT.
2. THE SAMPLING STATION SHALL BE LOCATED IN EASILY ACCESSIBLE AREA, MINIMUM 10'(FEET) FROM EDGE OF ROADWAY PAVEMENT IN GRASSED AREA.
3. ALTERNATIVE DESIGNS WILL BE ACCEPTED SUBJECT TO REVIEW AND APPROVAL BY THE DEPARTMENT.
4. ALL BRASS SHALL BE "LEAD FREE".
5. CASING IS REQUIRED FOR SERVICE PIPING UNDER PAVED AREAS.
6. THE HOUSING COLOR SHALL BE FIRE HYDRANT RED.

## PERMANENT SAMPLING POINT 15W

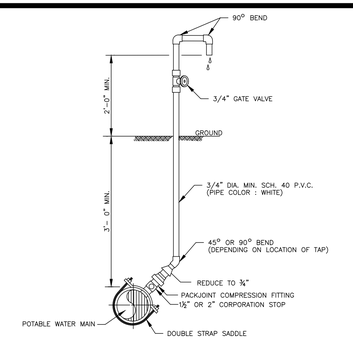


NOTE:

1. SAMPLE POINT SHOULD BE A SERVICE LINE OR FIRE HYDRANT IF POSSIBLE.
2. THREADED AREAS OF CORPORATION STOP SHALL BE SPIRAL WRAPPED WITH TWO WRAPS OF TEFLON TAPE.
3. CLOSE AND CAP CORPORATION STOP AFTER SAMPLING COMPLETION.

## POTABLE WATER MAIN TEMPORARY SAMPLING POINT 16W

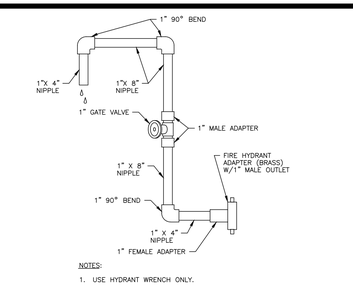


NOTES:

1. USE HYDRANT WRENCH ONLY.
2. ALL PIPES AND FITTINGS SCH. 40 P.V.C. (PIPE COLOR : WHITE)

## POTABLE WATER MAIN FIRE HYDRANT SAMPLING POINT 17W

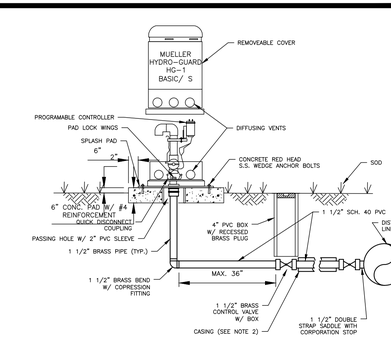


NOTES:

1. 12" MINIMUM CLEARANCE TO BE MAINTAINED BETWEEN AUTOMATIC FLUSHING SYSTEM PAD AND ANY OBSTRUCTION.
2. FOR INSTALLATION OF SERVICES UNDER DRIVEWAYS AND ROADWAYS, USE MIN. 4" DIAMETER BLACK IRON, PVC SCH 40, OR HDPE SDR 9 CASING. CASING SHALL EXTEND MIN. 24" BEYOND EDGE OF PAVEMENT. CASING TO BE SEALED WITH CEMENT. CASING SHALL BE COLOR-CODED BLACK, WHITE, BLUE, OR BLUE STRIPED.
3. AUTOMATIC FLUSHING ASSEMBLY TO BE INSTALLED AS CLOSE AS POSSIBLE TO THE WATER MAIN.
4. BEDDING (MIN. 4") AND COVER (MIN. 4") OVER SERVICE LINE OR CASING SHALL CONSIST OF FINE GRANULAR MATERIAL. UNSUITABLE IN-SITU MATERIALS SUCH AS MUCK, DEBRIS AND LARGER ROCKS SHALL BE REMOVED WITH 2" MAXIMUM SIZE.
5. ALL HARDWARE FOR FLANGED CONNECTIONS (BOLTS, ETC.) TO BE STAINLESS STEEL.
6. THREADED AREAS OF CORPORATION STOP AND OTHER FITTINGS SHALL BE SPIRAL WRAPPED WITH TWO (2) WRAPS OF TEFLON TAPE. ALL BRASS SHALL BE "LEAD FREE".
7. A 4" THICK COMPACTED 3/4" ROCK BASE IS REQUIRED. THE BASE SHALL EXTEND MINIMUM 12" BEYOND AUTOMATIC FLUSHING ASSEMBLY PAD PERIMETER.

## AUTOMATIC FLUSHING ASSEMBLY (TYPE A) 43W

# POTABLE WATER #2 STANDARD DETAILS


CONSULTANT:
Kimley»Horn



IT'S THE LAW ! CALL 48 HOURS BEFORE YOU DIG
1-800-432-4770
SUNSHINE STATE ONE CALL OF FLORIDA, INC.
UTILITIES NOTIFICATION CENTER


| | | |
|---|---|---|
| DESIGNED BY: | WUD | MICHAEL D. SPRUCE, P.E. 52776 |
| DRAWN BY: | WUD CADD | Palm Beach County |
| CHECKED BY: | A. GALICKI | Water Utilities Department |
| APPROVED BY: | WUD | P.O.Box 16097 |
| | | West Palm Beach, FL 33416-6097 |

PROJECT NO. 149658011

FONTANA TOWNHOMES
PREPARED FOR
MERITAGE HOMES

PALM BEACH COUNTY
WATER UTILITIES DEPARTMENT
P.O. BOX 16097
WEST PALM BEACH, FL 33416
(561)493-6000

| NO. | DATE | REVISION / REMARKS | BY |
|---|---|---|---|
| 1 | 04/02/20 | FINAL PERMIT/CONST. PLANS | J.L. |
| 2 | JUNE 2019 | GENERAL REVISION | J.L. |

STD DETAILS

SHEET NUMBER 2 OF 4

SEAL

Jan 15, 2021

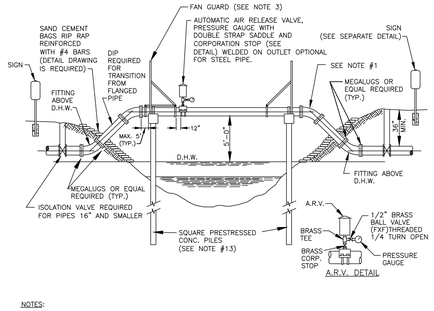


A.R.V. DETAIL

NOTES:

1. ALL EXPOSED PIPE SHALL BE DUCTILE IRON OR PREFABRICATED STEEL WITH FLANGED FITTINGS AND PROFILED GASKETS. RETAINER GLANDS AND/OR UNIFLANGE TYPE FITTINGS ARE NOT TO BE SUBSTITUTED FOR FLANGED FITTINGS. PREFABRICATED STEEL PIPE MAY INCORPORATE WELDED ON LONG RADIUS UPPER BENDS. PREFABRICATED FLANGED PIPE SHALL BE FACTORY TESTED.
2. SPAN LENGTHS AS REQUIRED BY PERMITTING AGENCY
3. FAN GUARDS ARE REQUIRED. SEE FAN GUARD/PILE CAP DESIGN DETAILS FOR ADDITIONAL REQUIREMENTS. ACCESS PLATFORM AND GATE REQUIRED ON ARV SIDE ONLY.
4A. ALL EXPOSED PIPING SHALL BE PAINTED AS SPECIFIED IN THE APPROVED MATERIAL LIST.
4B. ALL HARDWARE SHALL BE PAINTED WITH COAL-TAR EPOXY.
5. PIPE SHALL BE CRADLED ON ⅜" THICK NEOPRENE.(DUROMETER GRADE 50.) CURRENT FDOT STANDARDS APPLY. NEOPRENE IS REQUIRED AT ALL STRAPS INSTALLED OVER STEEL PIPE. NEOPRENE SHALL EXTEND MIN. 1" BEYOND THE EDGES OF CRADLE AND STRAPS.
6. TIE-DOWN STRAPS MUST PROPERLY FIT AND SECURE PIPE IN CRADLE.
7. PIPE CRADLE IN CAP SHALL CONTACT ⅓ CIRCUMFERENCE OF PIPE. (SEE FAN GUARD DETAIL)
8. SHOW EXISTING CANAL CROSS SECTION ULTIMATE CANAL SECTION AND RELEVANT ELEVATIONS AND DISTANCES ON A TO SCALE DETAIL DRAWING.
9. PILE LIFT CABLE SHALL BE REMOVED BELOW SURFACE; HOLE SHALL BE FILLED WITH EPOXY CEMENT.
10. THREADED AREAS OF BRASS FITTINGS SHALL BE SPIRAL WRAPPED WITH TWO WRAPS OF TEFLON TAPE.
11. THE PRESSURE GAUGE SHALL FACE THE CLOSEST FAN GUARD.
12. THE PRESSURE GAUGE SHALL BE "ASHCROFT NO. 45–1009A" OR APPROVED EQUAL.
13. THE PILES AND CAP DESIGN SHALL BE SHOWN ON TO SCALE SIGNED AND SEALED DETAIL DRAWINGS. (MIN. 12"x12" TYPE 1A FLORIDA DOT. INDEX PILES ARE REQUIRED.) PILE PENETRATION BELOW CANAL BOTTOM SHALL BE 15' MINIMUM. MINIMUM LOAD CAPACITY OF 20 TONS PER PILE IS REQUIRED (FDOT STANDARDS APPLY). SIGNED AND SEALED SHOP DRAWINGS ARE REQUIRED.
14. STEEL PIPE SHALL HAVE WELDED ON BEARING PADS EXTENDING MIN. 1" BEYOND PIPE CRADLE THE PADS SHALL BE INSTALLED PRIOR TO PAINTING

## POTABLE WATER MAIN TYPICAL AERIAL CANAL CROSSING – SINGLE PIPE (SINGLE PILES) 26W

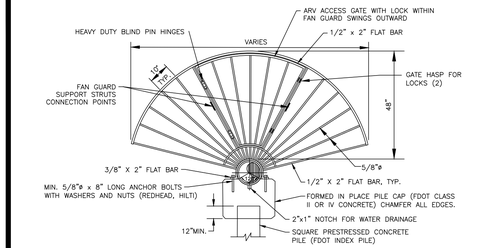


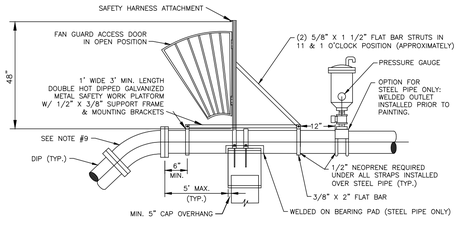


NOTES:

1. FAN GUARDS SHALL BE PLACED AT EACH END OF CANAL CROSSING.
2. HARDWARE SHALL BE PAINTED WITH COAL TAR EPOXY.
3. FANGUARD WITH HARDWARE SHALL BE FABRICATED FROM DOUBLE HOT DIPPED GALVANIZED STEEL.
4. SHOP DRAWINGS FOR FANGUARDS, CAPS, AND PILES MUST BE SUBMITTED TO PBCWUD FOR REVIEW AND APPROVAL PRIOR TO PRE–CONSTRUCTION MEETING.
5. REINFORCING STEEL SHALL CONFORM TO ASTM A–615, GRADE 60. MIN. 2" CONCRETE COVER OVER ALL STEEL.
6. SEE "TYPICAL CANAL CROSSING DETAIL" FOR ADDITIONAL REQUIREMENTS.
7. NO WELDING OF REBAR TO REBAR OR REBAR TO PILE STRANDS SHALL BE ALLOWED.
8. DESIGN DRAWINGS ARE REQUIRED.
9. LONG RADIUS WELDED ON UPPER BENDS ARE ACCEPTABLE FOR STEEL PIPE.
10. IF A PILE/CAP STEEL CONNECTION IS REQUIRED BY DESIGNING ENGINEER, MIN. (4) #8 REINFORCEMENT BARS SHALL BE DRILLED AND DOWELED (EPOXIED) MIN. 16" DEEP INTO THE PILE AND TIED WITH THE CAP STEEL.
11. ACCESS PLATFORM AND GATE REQUIRED ON ARV SIDE ONLY.

## FAN GUARD/ PILE CAP DESIGN SINGLE PILE (SINGLE PILES) 27W

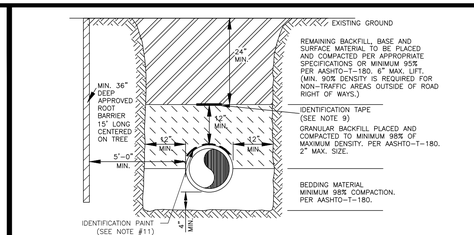


NOTES:

1. BEDDING SHALL CONSIST OF IN–SITU GRANULAR MATERIAL OR WASHED AND GRADED LIMEROCK 3/8" – 7/8" SIZING. UNSUITABLE IN–SITU MATERIALS SUCH AS MUCK, DEBRIS AND LARGER ROCKS SHALL BE REMOVED.
2. THE PIPE SHALL BE FULLY SUPPORTED FOR ITS ENTIRE LENGTH WITH APPROPRIATE COMPACTION UNDER THE PIPE HAUNCHES.
3. THE PIPE SHALL BE PLACED IN A DRY TRENCH.
4. BACKFILL SHALL BE FREE OF UNSUITABLE MATERIAL SUCH AS LARGE ROCK, MUCK AND DEBRIS.
5. DENSITY TESTS ARE REQUIRED IN 1 FOOT LIFTS ABOVE THE PIPE AT INTERVALS OF 400' MAXIMUM, MINIMUM 1 SET OF TESTS FOR EACH WASTEWATER GRAVITY MAIN RUN, OR AS DIRECTED BY THE INSPECTOR.
6. THE DEVELOPER/CONTRACTOR SHALL BE RESPONSIBLE TO COMPLY WITH ALL TRENCH SAFETY LAWS AND REGULATIONS.
7. SEE SEPARATE DETAILS FOR "PIPE INSTALLATION UNDER EXISTING PAVEMENT – OPEN CUT."
8. THE AFFECTED AREA SHALL BE RESTORED TO EQUAL OR BETTER CONDITION OR AS SPECIFIED IN PERMIT/CONTRACT DOCUMENTS.
9. APPROVED MAGNETIC TAPE IS REQUIRED FOR: ALL POTABLE WATER MAINS, FORCE MAINS AND RECLAIMED WATER MAINS. THE TAPE SHALL BE INSTALLED MAX. 24" BELOW FINISHED GRADE.
10. ROOT BARRIER IS REQUIRED FOR APPROVED TREE INSTALLATION CLOSER THAN 10 FEET FROM UTILITY FACILITIES.
11. CONTINUOUS 4" WIDE PAINT STRIPING IS REQUIRED FOR DIP/PCCP WATER MAINS (BLUE), DIP SEWER MAINS (GREEN), AND DIP RECLAIMED WATER MAINS (PURPLE).
12. PERMANENT ABOVE GROUND UTILITY MARKER SHALL BE INSTALLED IF REQUIRED BY PROPERTY OWNER GRANTING THE PIPE INSTALLATION PERMIT.
13. FOR PIPE INSTALLATIONS IN ROAD RIGHTS–OF–WAY, ROAD OWNER'S PERMIT SPECIFICATIONS SHALL APPLY.

## TYPICAL TRENCH DETAIL/ ROOT BARRIER INSTALLATION DETAIL 23W

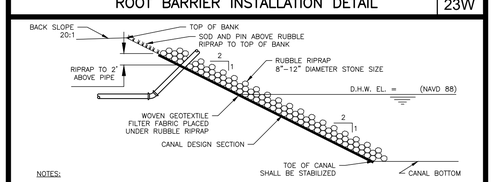


NOTES:

1. RUBBLE RIPRAP TO MEET F.D.O.T. STANDARD SPECIFICATIONS FOR ROAD AND BRIDGE CONSTRUCTION AND F.D.O.T. DESIGN STANDARDS.
2. DUMP RUBBLE IN PLACE FORMING A COMPACT LAYER CONFORMING TO THE CANAL DESIGN SECTION SLOPE. ENSURE THAT RUBBLE DOES NOT SEGREGATE SO THAT SMALLER PIECES EVENLY FILL THE VOIDS BETWEEN LAGER PIECES.
3. ALTERNATIVE DESIGN WILL BE CONSIDERED, SUBJECT TO APPROVAL BY THE CANAL PROPERTY OWNER.

## RUBBLE RIPRAP DETAIL 45W

CONSTRUCTION PROCEDURES

THE BACKFILL FOR THE FIRST AND SECOND STAGES SHALL BE PLACED IN 6" LIFTS (COMPACTED THICKNESS) AND SHALL BE COMPACTED TO 100% OF MAXIMUM DENSITY AS DETERMINED BY AASHTO T–99.

STAGE 1:

THE CONTRACTOR SHALL PROVIDE ADEQUATE COMPACTED FILL BENEATH THE HAUNCHES OF THE PIPE, USING MECHANICAL TAMPS SUITABLE FOR THIS PURPOSE. THIS COMPACTION APPLIES TO THE MATERIAL PLACED BENEATH THE HAUNCHES OF THE PIPE AND ABOVE ANY BEDDING REQUIRED.

STAGE 2:

THE CONTRACTOR SHALL OBTAIN A WELL–COMPACTED BED AND FILL ALONG THE SIDES OF THE PIPE AND TO A POINT INDICATING THE TOP OF SUB–GRADE MATERIAL.

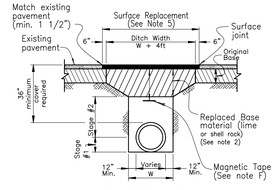


REPLACEMENT OF FLEXIBLE PAVEMENT FOR PERMITTED PAVEMENT CUT

CONSTRUCTION NOTES

1) BEDDING SHALL CONSIST OF IN–SITU GRANULAR MATERIAL OR WASHED AND GRADED LIMEROCK 3/8" – 7/8" SIZING WITH EQUAL OR GREATER STRUCTURAL ADEQUACY AS EXISTING. UNSUITABLE IN–SITU MATERIALS SUCH AS MUCK, DEBRIS AND LARGER ROCKS SHALL BE REMOVED.
2) REPLACED BASE MATERIAL (PER LAND DEVELOPMENT DESIGN STANDARDS) OVER DITCH SHALL BE TWICE THE THICKNESS OF THE ORIGINAL BASE OR 12" MINIMUM, WHICHEVER IS GREATER.
3) ASPHALT CONCRETE PAVEMENT JOINTS SHALL BE MECHANICALLY SAWED AND BUTT–JOINTED.
4) BASE MATERIAL SHALL BE PLACED IN TWO OR THREE LAYERS (6" MAX. PER LAYER) AND EACH LAYER THOROUGHLY ROLLED OR TAMPED TO THE SPECIFIED DENSITY.
5) SURFACE MATERIAL WILL BE CONSISTENT WITH THE EXISTING SURFACE OR 1 1/2" SI ASPHALTIC CONCRETE WITH RC–70 PRIME COAT AT 0.10 GAL/SQ. YD.
6) PIPE SHALL BE PLACED IN A DRY TRENCH.

GENERAL NOTES

A) ALL ROADWAY REPAIR WORK SHALL BE PERFORMED IN CONFORMANCE WITH APPLICABLE FDOT STANDARD SPECIFICATIONS FOR ROAD AND BRIDGE CONSTRUCTION AND COUNTY PPM# EL–0–3605.
B) DENSITY TESTS SHALL BE TAKEN IN 1 FT LIFTS ABOVE THE PIPE AT INTERVALS OF 400 FT MAXIMUM (1 SET MINIMUM) OR AS DIRECTED BY THE CONSTRUCTION COORDINATION DIVISION. RESULTS SHALL BE SUBMITTED TO CONSTRUCTION COORDINATION DIVISION AS PART OF THEIR FIELD REVIEW.
C) ENGINEER–OF–RECORD SHALL PROVIDE FULL–TIME INSPECTION DURING THE ENTIRETY OF THE OPEN–CUT OPERATION, BEGINNING WITH THE EXCAVATION AND CONTINUING THROUGH THE COMPLETION OF THE PAVING.
D) IF THE PAVEMENT IS NOT COMPLETELY RESTORED IMMEDIATELY FOLLOWING THE OPEN CUT, A SMOOTH TEMPORARY PATCH (MINIMUM 1.25" ASPHALT) SHALL BE INSTALLED, PROPERLY MATCHING THE EXISTING GRADING OF THE ROADWAY. THE TEMPORARY PATCH SHALL BE ALLOWED TO REMAIN IN PLACE AND BE MAINTAINED FOR A PERIOD NO LONGER THAN 45 DAYS. THE COUNTY RETAINS THE RIGHT TO USE POSTED SURETY TO COMPLETE ANY RESTORATION WORK THAT HAS NOT BEEN COMPLETED IN THE 45 DAYS PERIOD. ALTERNATIVE TEMPORARY TRENCH PROTECTION (STEEL PLATES OR OTHERS) MAY BE APPROVED BY THE CONSTRUCTION COORDINATION DIVISION.
E) FOR THE FINAL RESTORATION, THE ROAD SHALL BE MILLED AND RESURFACED WITH 1–1/2" (ONE AND A HALF INCH) OF SIII OR SI ASPHALT SURFACE COURSE FOR A FULL LANE WIDTH ENCROACHED BY THE TRENCH.
F) APPROVED MAGNETIC TAPE IS REQUIRED FOR ALL MAIN PRESSURE PIPES AND CONDUIT IN THE COUNTY'S RIGHT–OF–WAY. INSTALL TAPE 24" BELOW FINISHED GRADE.
G) CONTINUOUS 4" WIDE PAINT STRIPING IS REQUIRED FOR DIP/PCCP WATER MAINS (BLUE), DIP SANITARY MAINS (GREEN), DIP RECLAIMED WATER MAINS (PURPLE), GAS MAINS (YELLOW), OR AS REQUIRED BY THE APWA.

## OPEN CUT PIPE INSTALLATION NON–THOROUGHFARE ROAD 24W

CONSTRUCTION PROCEDURES

THE BACKFILL FOR THE FIRST AND SECOND STAGES SHALL BE PLACED IN 6" LIFTS (COMPACTED THICKNESS) AND SHALL BE COMPACTED TO 100% OF MAXIMUM DENSITY AS DETERMINED BY AASHTO T–99.

STAGE 1:

THE CONTRACTOR SHALL PROVIDE ADEQUATE COMPACTED FILL BENEATH THE HAUNCHES OF THE PIPE, USING MECHANICAL TAMPS SUITABLE FOR THIS PURPOSE. THIS COMPACTION APPLIES TO THE MATERIAL PLACED BENEATH THE HAUNCHES OF THE PIPE AND ABOVE ANY BEDDING REQUIRED.

STAGE 2:

THE CONTRACTOR SHALL OBTAIN A WELL–COMPACTED BED AND FILL ALONG THE SIDES OF THE PIPE AND TO A POINT INDICATING THE TOP OF SUB–GRADE MATERIAL.

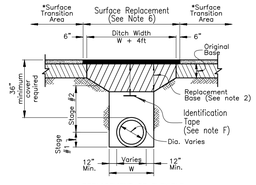


REPLACEMENT OF FLEXIBLE PAVEMENT FOR PERMITTED PAVEMENT CUT

CONSTRUCTION NOTES

1) BEDDING SHALL CONSIST OF IN–SITU GRANULAR MATERIAL OR WASHED AND GRADED LIMEROCK 3/8" – 7/8" SIZING WITH EQUAL OR GREATER STRUCTURAL ADEQUACY AS EXISTING. UNSUITABLE IN–SITU MATERIALS SUCH AS MUCK, DEBRIS AND LARGER ROCKS SHALL BE REMOVED.
2) REPLACED BASE MATERIAL OVER DITCH SHALL BE 16" MINIMUM FOR THOROUGHFARE PLAN ROADS.
3) ASPHALT CONCRETE PAVEMENT JOINTS SHALL BE MECHANICALLY SAWED AND BUTT–JOINTED.
4) BASE MATERIAL (PER ROADWAY PRODUCTION DESIGN STANDARDS) SHALL BE PLACED IN TWO OR THREE LAYERS (6" MAX. PER LAYER) AND EACH LAYER THOROUGHLY ROLLED ON TAMPED TO THE SPECIFIED DENSITY.
5) * SURFACE TRANSITION AREA (SEE PLANS FOR LOCATION). OVERLAY OR MILL/RESURFACE FOR A DISTANCE OF 50'ON BOTH SIDES OF THE OPEN CUT AND FOR A FULL LANE WIDTH.
6) 1" SIII ASPHALTIC CONCRETE OVER 1 1/2" SI ASPHALTIC CONCRETE WITH RC–70 PRIME COAT AT 0.10 GAL/SQ. YD.
7) PIPE SHALL BE PLACED IN A DRY TRENCH.

GENERAL NOTES

A) ALL ROADWAY REPAIR WORK SHALL BE PERFORMED IN CONFORMANCE WITH APPLICABLE FDOT STANDARD SPECIFICATIONS FOR ROAD AND BRIDGE CONSTRUCTION AND COUNTY PPM# EL–0–3605.
B) DENSITY TESTS SHALL BE TAKEN IN 1 FT LIFTS ABOVE THE PIPE AT INTERVALS OF 400 FT MAXIMUM (1 SET MINIMUM) OR AS DIRECTED BY THE CONSTRUCTION COORDINATION DIVISION. RESULTS SHALL BE SUBMITTED TO CONSTRUCTION COORDINATION DIVISION AS PART OF THEIR FIELD REVIEW.
C) ENGINEER–OF–RECORD SHALL PROVIDE FULL–TIME INSPECTION DURING THE ENTIRETY OF THE OPEN–CUT OPERATION, BEGINNING WITH THE EXCAVATION AND CONTINUING THROUGH THE COMPLETION OF THE PAVING.
D) IF THE PAVEMENT IS NOT COMPLETELY RESTORED IMMEDIATELY FOLLOWING THE OPEN CUT, A SMOOTH TEMPORARY PATCH (MINIMUM 1.25" ASPHALT) SHALL BE INSTALLED, PROPERLY MATCHING THE EXISTING GRADING OF THE ROADWAY. THE TEMPORARY PATCH SHALL BE ALLOWED TO REMAIN IN PLACE AND BE MAINTAINED FOR A PERIOD NO LONGER THAN 45 DAYS. THE COUNTY RETAINS THE RIGHT TO USE POSTED SURETY TO COMPLETE ANY RESTORATION WORK THAT HAS NOT BEEN COMPLETED IN THE 45 DAYS PERIOD. ALTERNATIVE TEMPORARY TRENCH PROTECTION (STEEL PLATES OR OTHERS) MAY BE APPROVED BY THE CONSTRUCTION COORDINATION DIVISION.
E) THE FINAL RESTORATION, THE ROAD SHALL BE MILLED/RESURFACED FOR A FULL LANE WIDTH OF THE TRAVEL LANES ENCROACHED BY THE TRENCH AREA, INCLUDING A TRANSITION AREA OF 50 FT ON EACH SIDE OF THE TRENCH, THE PAVEMENT SHALL BE MILLED AND RESURFACED PER CONSTRUCTION NOTE 6.
F) APPROVED MAGNETIC TAPE IS REQUIRED FOR ALL MAIN PRESSURE PIPES AND CONDUIT IN THE COUNTY'S RIGHT–OF–WAY. INSTALL TAPE 24" BELOW FINISHED GRADE.
G) CONTINUOUS 4" WIDE PAINT STRIPING IS REQUIRED FOR DIP/PCCP WATER MAINS (BLUE), DIP SANITARY MAINS (GREEN), DIP RECLAIMED WATER MAINS (PURPLE), GAS MAINS (YELLOW), OR AS REQUIRED BY THE APWA.

## OPEN CUT PIPE INSTALLATION THOROUGHFARE ROAD 25W

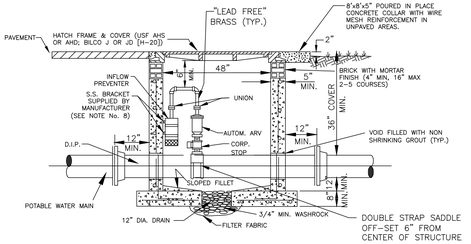


NOTES:

1. 4000 P.S.I. TYPE II PRECAST CONCRETE WITH STEEL REINFORCEMENT. SHOP DRAWING IS REQUIRED
2. AIR RELEASE VALVE SHALL BE TYPE AND SIZE APPROPRIATE FOR SERVICE INTENDED. FORCE MAINS REQUIRE 2" MIN.
3. ALL OPENINGS SHALL BE SEALED WITH WATERPROOF NON–SHRINKING GROUT.
4. OTHER VAULT AND COVER DESIGNS MAY BE USED UPON SUBMITTAL AND APPROVAL OF SHOP DRAWINGS.
5. DUCTILE IRON PIPE IS REQUIRED THROUGH THE VAULT. NO PIPE JOINTS INSIDE OR WITHIN 12" OF THE VAULT.
6. THREADED AREAS OF BRASS FITTINGS SHALL BE SPIRAL WRAPPED WITH TWO WRAPS OF TEFLON TAPE.
7. LARGER VAULTS WILL BE REQUIRED FOR PIPES LARGER THAN 12"

| PIPE SIZE | MIN. VAULT SIZE |
|---|---|
| 16"–24" | 4'x5' |
| 30"–42" | 4'x6' |

8. SHOP DRAWINGS ARE REQUIRED FOR CUSTOM MADE BRACKETS

## POTABLE WATER MAIN UNDERGROUND AIR RELEASE VALVE AND VAULT IN NON–TRAFFIC AREAS OUTSIDE OF ROAD R/W 28W

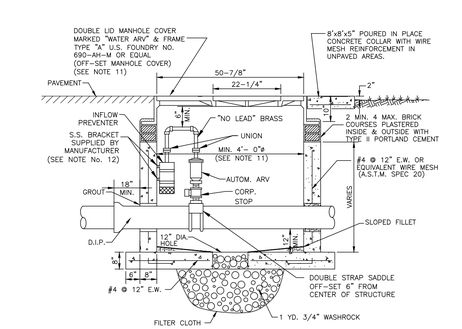


NOTES:

1. PRECAST CONCRETE TYPE # 4000 P.S.I. A SHOP DRAWING IS REQUIRED.
2. ALL OPENINGS SHALL BE SEALED WITH A WATERPROOF NON–SHRINKING GROUT.
3. LIFT HOLES ARE PERMITTED.
4. ALL PIPE HOLES SHALL BE PRECAST OR CORE–DRILLED.
5. MANHOLE FABRICATION SHALL BE IN ACCORDANCE WITH A.S.T.M. C–478 LATEST STANDARD.
6. CONCRETE COLLAR REQUIRED WHEN MANHOLE IS OUTSIDE OF PAVEMENT, SEE DETAIL.
7. AIR RELEASE VALVE SHALL BE TYPE AND SIZE APPROPRIATE FOR SERVICE INTENDED. FORCE MAINS REQUIRE 2" MIN.
8. DUCTILE IRON PIPE IS REQUIRED THROUGH THE VAULT. NO PIPE JOINTS INSIDE OR WITHIN 18" OF THE MANHOLE.
9. THREADED AREAS OF BRASS FITTINGS SHALL BE SPIRAL WRAP WITH TWO WRAPS OF TEFLON TAPE.
10. FOR PIPES 12" AND SMALLER, AN ALTERNATIVE DESIGN WITH APPROVED 32" DIAMETER HINGED MANHOLE COVERS WILL BE CONSIDERED.
11. LARGER MANHOLES WILL BE REQUIRED FOR PIPES LARGER THAN 12"

| PIPE SIZE | MIN. MANHOLE DIAMETER |
|---|---|
| 16"–24" | 60" |
| 30"–42" | 72" |

12. SHOP DRAWINGS ARE REQUIRED FOR CUSTOM MADE BRACKETS

## POTABLE WATER MAIN AIR RELEASE MANHOLE IN PAVED AREAS AND ROAD R/W 29W

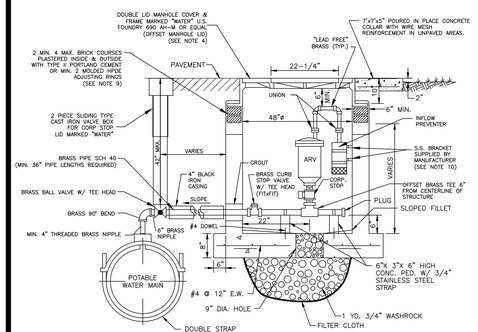


NOTES:

1. MONOLITHICALLY POURED STRUCTURE IS REQUIRED (ASTM C–478)
2. ALL OPENINGS SHALL BE SEALED WITH A WATERPROOF NON–SHRINKING GROUT.
3. ALL PIPE HOLES SHALL BE PRECAST OR CORE–DRILLED.
4. ALTERNATIVE DESIGN WILL BE CONSIDERED USING APPROVED 32" DIAMETER HINGED MANHOLE COVER
5. ARV, TAP AND PIPING TO BE TYPE AND SIZE APPROPRIATE FOR SERVICE INTENDED.
6. CONCRETE COLLAR REQUIRED IN UNPAVED AREAS.
7. SHOP DRAWING IS REQUIRED FOR REVIEW AND APPROVAL.
8. THREADED AREAS OF BRASS FITTINGS AND OTHER FITTINGS SHALL BE SPIRAL WRAPPED WITH TWO WRAPS OF TEFLON TAPE.
9. IN LIEU OF BRICK WORK, APPROVED PRECAST CONCRETE ADJUSTING RINGS MAY BE USED. INSTALLATION SHALL FOLLOW MANUFACTURERS RECOMMENDATIONS.
10. SHOP DRAWINGS ARE REQUIRED FOR CUSTOM MADE BRACKETS
11. PIPE AND FITTINGS SHALL BE NO LEAD BRASS.

## POTABLE WATER MAIN OFF–SET UNDERGROUND AIR RELEASE VALVE 30W

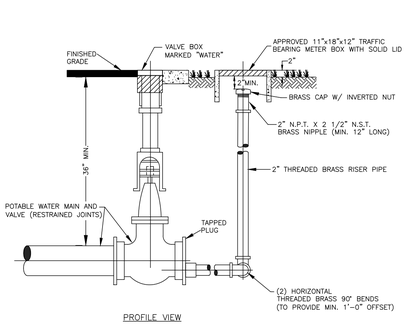


PROFILE VIEW

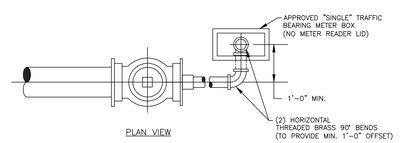


PLAN VIEW

NOTES:

1. BLOWOFF BOX TO BE LOCATED IN GRASS AREA, MIN. 2' FROM SIDEWALK OR PAVEMENT
2. PERMANENT DEAD ENDS SHALL INCLUDE AN APPROVED AUTOMATIC FLUSHING ASSEMBLY.
3. ALL BRASS SHALL BE "LEAD FREE".

## TYPICAL 2" TERMINAL BLOWOFF POTABLE WATER DISTRIBUTION MAINS 21W

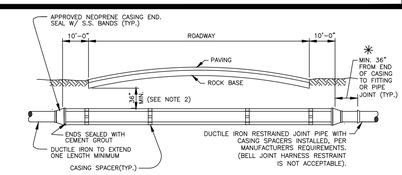


| CARRIER PIPE SIZE | STEEL CASING INSIDE DIAMETER (MIN) | MINIMUM WALL THICKNESS (SEE NOTE 2) |
|---|---|---|
| 4" | 12" | .188 |
| 6" | 14" | .250 |
| 8" | 20" | .250 |
| 10" | 20" | .250 |
| 12" | 24" | .250 |
| 14" | 24" | .250 |
| 16" | 30" | .312 |
| 18" | 30" | .312 |
| 20" | 36" | .372 |
| 24" | 42" | .500 |
| 30" | 48" | .500 |
| 36" | 54" | .625 |
| 42" | 60" | .625 |
| 48" | 72" | .625 |

NOTE:

1. A TO–SCALE PROFILE DRAWING FOR EACH UTILITY MAIN JACK AND BORE IS REQUIRED. ALL RELEVANT DATA MUST BE SHOWN (LENGTH AND SIZE OF CASING, PIPE CONFLICTS, ELEVATIONS, ETC.).
2. THICKER WALL CASINGS AND

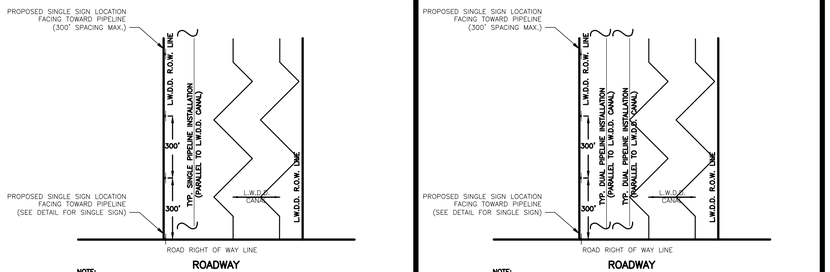


NOTE:

1. UNDERGROUND PIPELINE WARNING SIGNS ARE TO BE PLACED AT THE POINT IN WHICH THE LINE INGRESSES AND EGRESSES THE L.W.D.D. RIGHT-OF-WAY.
2. SIGN SPACING IS TO BE A MAXIMUM OF 300' ALONG THE L.W.D.D. RIGHT-OF-WAY, AS CLOSE AS POSSIBLE TO THE L.W.D.D. RIGHT-OF-WAY.

L.W.D.D. – SINGLE PIPE PARALLEL INSTALLATION UNDERGROUND PIPELINE SIGN INSTALLATION DETAIL

38W




NOTE:

1. UNDERGROUND PIPELINE WARNING SIGNS ARE TO BE PLACED AT THE POINT IN WHICH THE LINE INGRESSES AND EGRESSES THE L.W.D.D. RIGHT-OF-WAY.
2. SIGN SPACING IS TO BE A MAXIMUM OF 300' ALONG THE L.W.D.D. RIGHT-OF-WAY, AS CLOSE AS POSSIBLE TO THE L.W.D.D. RIGHT-OF-WAY.

L.W.D.D. – DUAL PIPE PARALLEL INSTALLATION UNDERGROUND PIPELINE SIGN INSTALLATION DETAIL

39W

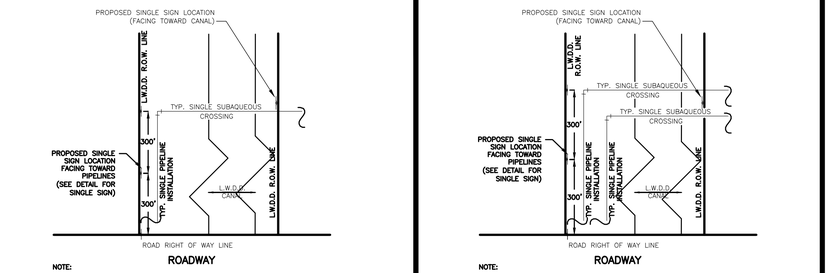


NOTE:

1. UNDERGROUND PIPELINE WARNING SIGNS ARE TO BE PLACED ON BOTH SIDES OF THE CANAL CROSSING; AT THE INSIDE EDGE OF THE RIGHT-OF-WAY.
2. SIGN POST IS NOT TO BE PLACED DIRECTLY OVER PIPELINE. OFFSET SIGN POST 5' FROM PIPELINE.

L.W.D.D. – SINGLE PIPE SUBAQUEOUS CROSSING UNDERGROUND PIPELINE SIGN INSTALLATION DETAIL

40W




NOTE:

1. UNDERGROUND PIPELINE WARNING SIGNS ARE TO BE PLACED ON BOTH SIDES OF THE CANAL CROSSING; AT THE INSIDE EDGE OF THE RIGHT-OF-WAY.
2. SIGN POST IS NOT TO BE PLACED DIRECTLY OVER PIPELINE. OFFSET SIGN POST 5' FROM PIPELINE.

L.W.D.D. – DUAL PIPE SUBAQUEOUS CROSSING UNDERGROUND PIPELINE SIGN INSTALLATION DETAIL

41W

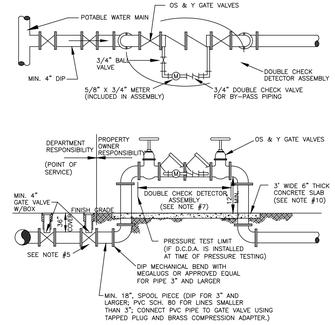


NOTES:

1. ALL PIPE AND FITTINGS UP TO THE D.C.D.A. SHALL BE DUCTILE IRON CEMENT LINED.
2. THE INITIAL TEST OF THE BACKFLOW PREVENTION ASSEMBLY SHALL BE PERFORMED BY THE DEPARTMENT PRIOR TO SERVICE ACTIVATION.
3. THE DOUBLE CHECK DETECTOR ASSEMBLY SHALL BE APPROVED BY THE UNIVERSITY OF SOUTHERN CALIFORNIA (U.S.C.) OR THE A.S.S.E. (WITH ONE YEAR FIELD TESTING).
4. THE PROPERTY OWNER SHALL BE RESPONSIBLE FOR THE PROPER OPERATION, MAINTENANCE AND SUBSEQUENT TESTING OF THE DOUBLE CHECK DETECTOR ASSEMBLY BY A CERTIFIED BACKFLOW TECHNICIAN .
5. WHEN FIRE LINE LENGTH IS OVER ONE PIPE LENGTH, LINE SHALL BE TERMINATED WITH A GATE VALVE (=POINT OF SERVICE). NO PIPE JOINTS / CONNECTIONS ARE PERMITTED BETWEEN POINT OF SERVICE AND VERTICAL 90° BEND
6. THE DESIGN SHALL MINIMIZE ANY POTENTIAL FOR WATER MAIN WITH NO FLOW. A FIRE HYDRANT LOCATED NEAR THE DOUBLE CHECK DETECTOR ASSEMBLY MAY BE REQUIRED FOR LONG, DEAD ENDING DEDICATED FIRE LINES.
7. AN APPROVED REDUCED PRESSURE PRINCIPLE DETECTOR ASSEMBLY SHALL BE REQUIRED FOR ALL FIRE SYSTEMS WITH STORAGE TANKS AND/OR AUXILIARY WATER SUPPLY.
8. TAMPER SWITCHES MAY BE REQUIRED BY THE FIRE MARSHALL.
9. PIPE MATERIAL ON THE CUSTOMER SIDE OF POINT OF SERVICE SHALL COMPLY WITH FIRE MARSHALL REQUIREMENTS
10. 3' WIDE 6" THICK CONCRETE SLAB IS RECOMMENDED FOR ASSEMBLY SMALLER THAN 4".

DOUBLE CHECK DETECTOR ASSEMBLY

32W

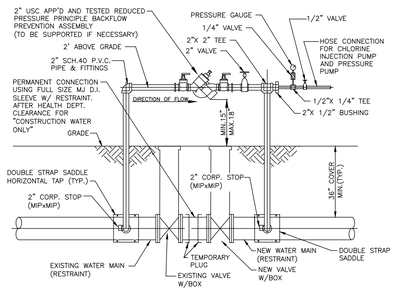


1. ENSURE PROPER RESTRAINT OF EXISTING VALVE AND EXISTING PIPE PRIOR TO NEW PIPE CONNECTION.
2. ENSURE PROPER OPERATION OF EXISTING VALVE.
3. INSTALL BY-PASS PIPING AS SHOWN. A NEARBY HYDRANT OR SERVICE TAP MAY BE USED AS A WATER SOURCE.
4. USING BY-PASS AND CHLORINE INJECTOR PUMP, DISINFECT NEW WATER MAIN (MIN. 50 CHLORINE PPM IS REQUIRED FOR DISINFECTION).
5. COMPLETE FILLING OF THE NEW WATER MAIN AND PERFORM BACTERIOLOGICAL TESTING.
6. REMOVE EXISTING BLOW OFF (IF APPLICABLE) AND EXISTING PLUG, CONNECT NEW MAIN TO EXISTING VALVE.
7. CRACK OPEN EXISTING VALVE AFTER INITIAL DISINFECTION AND FLUSH THE NEW WATER MAIN (PBCWUD PRESENCE IS REQUIRED).
8. REMOVE BY-PASS PIPING. CAP CORPORATION STOPS WITH BRASS CAPS.
9. PRESSURE TESTING IS REQUIRED AFTER SUCCESSFUL COMPLETION OF BACTERIOLOGICAL TESTING AND HEALTH DEPARTMENT RELEASE FOR "CONSTRUCTION WATER"(IF APPLICABLE). PRESSURE TEST TO BE PERFORMED AFTER BACKFILL/ ROAD BASE AND ROAD ROCK BASE INSTALLATION/ COMPACTION.
10. AN ALTERNATIVE TIE-IN PROCEDURE (PRESSURE TESTING PRIOR TO BACTERIOLOGICAL TESTING) MAY BE CONSIDERED WITH PRIOR APPROVAL. (SEE SEPARATE DETAIL).
11. RECORD DRAWINGS TO SHOW DATA FOR ALL TEST TAPS.
12. ALL BRASS SHALL BE "LEAD FREE".

STANDARD POTABLE WATER MAIN TIE-IN

33W

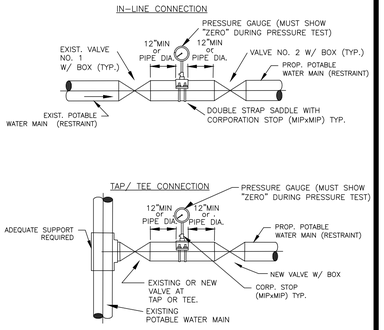


NOTES:

1. THE "ALTERNATIVE" PROCEDURE MUST BE APPROVED BY WUD IN ADVANCE. IT ALLOWS THE NEW PIPE TO BE PRESSURE TESTED PRIOR TO BACTERIOLOGICAL TESTING.
2. BOTH VALVES SHALL BE KEPT CLOSED EXCEPT FOR FILLING AND FLUSHING.
3. WUD SHALL BE NOTIFIED BEFORE FILLING AND FLUSHING.
4. PRESSURE TEST PUMP MAY BE CONNECTED TO SERVICE LINE, FIRE HYDRANT OR BLOWOFF IN THE TESTED WATER MAIN. NO EXTRA TAPS ARE PERMITTED UNLESS UNAVOIDABLE.
5. GAUGE AND RISER TO BE REMOVED AFTER PRESSURE TEST, HOLE TO BE PLUGGED AT SADDLE WITH BRASS PLUG. A BRASS CAP IS REQUIRED.
6. THREAD AREAS OF CORPORATION STOP SHALL BE SPIRAL WRAPPED WITH TWO WRAPS OF TEFLON TAPE.
7. ENSURE PROPER RESTRAINT OF EXISTING VALVE(S) AND PIPE PRIOR TO NEW CONNECTION.
8. SEE ALSO DETAIL FOR "STANDARD POTABLE WATER MAIN TIE-IN PROCEDURE"
9. RECORD DRAWINGS TO SHOW DATA FOR ALL TEST TAPS.
10. ALL BRASS SHALL BE "LEAD FREE".

ALTERNATIVE WATER MAIN TIE-IN

42W

GENERAL NOTES

DEFINITIONS

1. DEPARTMENT – THE PALM BEACH COUNTY WATER UTILITIES DEPARTMENT.
2. CONTRACTOR – UTILITY CONTRACTOR AND ALL UTILITY SUBCONTRACTORS.
3. ENGINEER – ENGINEER RESPONSIBLE FOR INSPECTION AND CERTIFICATION.

PROCEDURE

1. A PRE-CONSTRUCTION MEETING IS TO BE HELD PRIOR TO DELIVERY OF MATERIALS AND INITIATION OF ANY POTABLE WATER, RECLAIMED WATER AND/OR WASTEWATER SYSTEM CONSTRUCTION. THE MEETING SHALL BE ATTENDED BY THE DEPARTMENT, CONTRACTOR, ENGINEER AND OTHER INTERESTED PARTIES.
2. ANY REVISIONS TO THE APPROVED PLANS SHALL BE CALLED TO THE ATTENTION OF THE DEPARTMENT PRIOR TO THE PRE-CONSTRUCTION MEETING. REVISED PLANS MUST BE APPROVED PRIOR TO THE MEETING.
3. FIVE (5) COPIES OF THE CURRENT APPROVED MATERIAL LIST AND ALL NECESSARY SHOP DRAWINGS SHALL BE SUBMITTED FOR APPROVAL PRIOR TO SCHEDULING OF THE PRE-CONSTRUCTION MEETING.
4. ALL APPLICABLE PERMITS MUST BE OBTAINED PRIOR TO PRECONSTRUCTION MEETING. (DOT, HEALTH DEPARTMENT, COUNTY ENGINEER, ETC.).
5. THE CONTRACTOR SHALL MAINTAIN A CURRENT APPROVED SET OF CONSTRUCTION PLANS ON JOB SITE.
6. ALL MATERIALS SUPPLIED SHALL CONFORM TO PRODUCT LIST AND SHOP DRAWINGS AS APPROVED PRIOR TO CONSTRUCTION. SUBSTITUTE MATERIALS SHALL NOT BE APPROVED AFTER DELIVERY TO THE JOB SITE. ALL REQUESTS FOR MATERIAL SUBSTITUTION SHALL BE APPROVED PRIOR TO DELIVERY OF THESE MATERIALS TO THE JOB SITE.
7. THE LOCATIONS OF EXISTING UTILITIES SHOWN ON THE APPROVED PLANS ARE TO BE VERIFIED IN THE FIELD BY THE CONTRACTOR. APPROVAL OF DEVELOPMENT PLANS BY THE DEPARTMENT IN NO WAY IMPLIES VERIFICATION OF THE ACCURACY OF THOSE PLANS OR FEATURES DEPICTED THEREON. ANY DISCREPANCY IN OR VARIATION FROM THE APPROVED PLANS IS TO BE BROUGHT TO THE ATTENTION OF THE DEPARTMENT BY THE ENGINEER AND CONTRACTOR. THE CONTRACTOR SHALL CONFIRM AND INSTALL (IF NECESSARY) ADEQUATE MECHANICAL PIPE / JOINT RESTRAINT ON EXISTING PIPES PRIOR TO CONNECTION.
8. THE CONTRACTOR SHALL BE RESPONSIBLE AT ALL TIMES THROUGHOUT THE DURATION OF CONSTRUCTION FOR THE PROTECTION OF EXISTING AND NEWLY INSTALLED UTILITIES FROM DAMAGE OR DISRUPTION OF SERVICE. THE CONTRACTOR SHALL BE RESPONSIBLE FOR TAKING SUCH MEASURES AS NECESSARY TO PROTECT THE HEALTH, SAFETY AND WELFARE OF THOSE PERSONS HAVING ACCESS TO THE WORK SITE.
9. THE CONTRACTOR SHALL BE RESPONSIBLE FOR OBTAINING LOCATIONS FROM ALL OTHER UTILITY FACILITIES.
10. THE CONTRACTOR OR ENGINEER SHALL SCHEDULE INSPECTIONS AND TESTS A MINIMUM OF 24-48 HOURS IN ADVANCE.
11. NO CONNECTION TO OR ANY OTHER CONSTRUCTION SHALL BE PERFORMED ON AN EXISTING DEPARTMENT OWNED OR MAINTAINED MAIN OR STRUCTURE WITHOUT THE PRESENCE OF A DEPARTMENT INSPECTOR.
12. FACILITIES PROPOSED HEREIN SHALL BE CONSTRUCTED IN ACCORDANCE WITH THE APPROVED PLANS AND THE DEPARTMENT'S MINIMUM STANDARDS. CONFLICTS BETWEEN THE PRECEDING DOCUMENTS SHOULD BE CALLED TO THE ATTENTION OF THE DEPARTMENT FOR RESOLUTION. DEVIATIONS FROM THE APPROVED PLANS MUST BE APPROVED IN ADVANCE BY THE DEPARTMENT.
13. UPON COMPLETION OF CONSTRUCTION, A FINAL INSPECTION SHALL VERIFY PROPER ADHERENCE TO ALL FACETS OF THE PLANS AND SPECIFICATIONS.

PRESSURE PIPE NOTES

1. THERE SHALL BE 36" MINIMUM COVER FROM FINISHED GRADE TO TOP OF PIPE.
2. DUCTILE IRON PIPE (DIP) THICKNESS SHALL CONFORM TO THE DEPARTMENT'S APPROVED MATERIAL LIST. POTABLE WATER AND RECLAIMED WATER MAINS DIP SHALL BE CEMENT LINED. FORCE MAIN DIP SHALL BE CERAMIC EPOXY LINED.
3. PVC PRESSURE PIPE SHALL BE C-900, SDR-18, 150 PSI.
4. ALL FITTINGS SHALL BE DUCTILE IRON WITH MECHANICAL JOINTS AND CEMENT OR APPROVED EPOXY LINING.
5. POTABLE WATER, RECLAIMED WATER AND WASTEWATER FORCE MAIN VALVES 10 INCHES AND SMALLER SHALL BE RESILIENT SEAT GATE VALVES. TWELVE-INCH (12") OR LARGER FORCE MAIN VALVES SHALL BE RESILIENT SEAT GATE VALVES OR ECCENTRIC PLUG VALVES (IF APPROVED IN ADVANCE BY DEPARTMENT). POTABLE WATER AND RECLAIMED WATER MAIN VALVES LARGER THAN 10 INCHES SHALL BE BUTTERFLY VALVES.
6. ALL TRENCHING, PIPE-LAYING, BACKFILL, PRESSURE TESTING, AND DISINFECTION MUST COMPLY WITH ALL APPLICABLE FEDERAL, STATE, COUNTY AND HEALTH DEPARTMENT STANDARDS AND REGULATIONS.

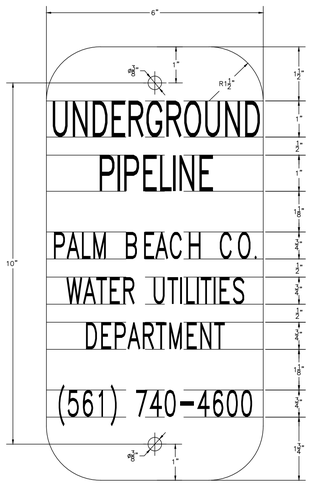


NOTE:

SIGN SHALL BE 6" WIDE X 12" LONG, ALUMINUM (0.080 GA.). SIGN COLOR IS WHITE WITH BLACK LETTERING. ROUNDED CORNERS (1.5" RAD.), 2 HOLES (3/8" DIAM.), 10" O.C.

UNDERGROUND PIPELINE SIGN DETAIL

35W

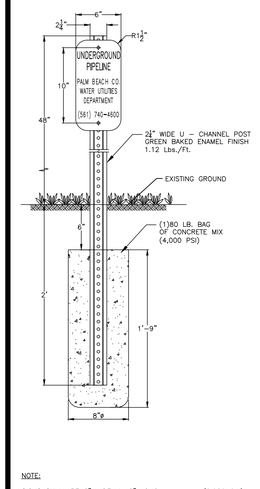


NOTE:

SIGNS SHALL BE 6" WIDE X 12" LONG, ALUMINUM (0.080 GA.). SIGN COLOR IS WHITE WITH BLACK LETTERING. ROUNDED CORNERS (1.5" RAD.), 2 HOLES (3/8" DIAM.), 10" O.C.

SINGLE UNDERGROUND PIPELINE SIGN DETAIL

36W

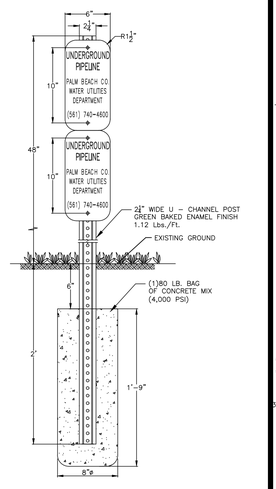


NOTES:

1. SIGNS SHALL BE 6" WIDE X 12" LONG, ALUMINUM (0.080 GA.) SIGN COLOR IS WHITE WITH BLACK LETTERING. ROUNDED CORNERS (1.5" RAD.), 2 HOLES (3/8" DIAM.), 10" O.C.
2. THE DUAL UNDERGROUND PIPELINE SIGN SHALL BE UTILIZED FOR TWO UNDERGROUND PIPELINES WITHIN THE L.W.D.D. RIGHT-OF-WAY.

DUAL UNDERGROUND PIPELINE SIGN DETAIL

37W

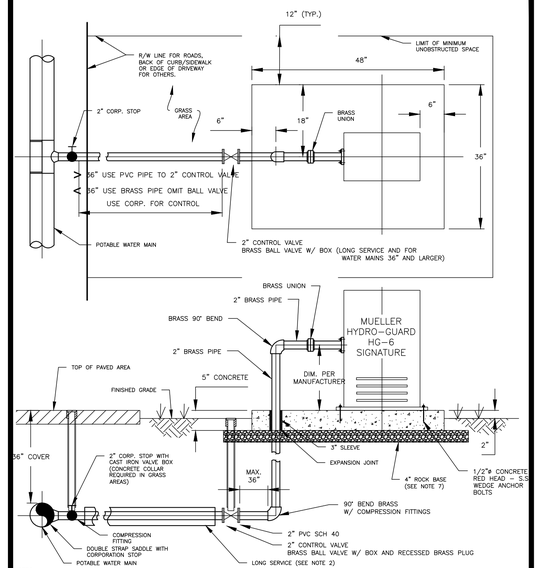


NOTES:

1. 12" MINIMUM CLEARANCE TO BE MAINTAINED BETWEEN AUTOMATIC FLUSHING SYSTEM PAD AND ANY OBSTRUCTION.
2. FOR INSTALLATION OF SERVICES UNDER DRIVEWAYS AND ROADWAYS, USE MIN. 4" DIAMETER BLACK IRON, PVC SCH 40, OR HDPE SDR 9 CASING. CASING SHALL EXTEND MIN. 24" BEYOND EDGE OF PAVEMENT. CASING TO BE SEALED WITH CEMENT. CASING SHALL BE COLOR-CODED BLACK, WHITE, BLUE, OR BLUE STRIPED.
3. AUTOMATIC FLUSHING ASSEMBLY TO BE INSTALLED AS CLOSE AS POSSIBLE TO THE WATER MAIN.
4. BEDDING (MIN. 4") AND COVER (MIN. 4") OVER SERVICE LINE OR CASING SHALL CONSIST OF FINE GRANULAR MATERIAL. UNSUITABLE IN-SITU MATERIALS SUCH AS MUCK, DEBRIS AND LARGER ROCKS SHALL BE REMOVED WITH 2" MAXIMUM SIZE.
5. ALL HARDWARE FOR FLANGED CONNECTIONS (BOLTS, ETC.) TO BE STAINLESS STEEL.
6. THREADED AREAS OF CORPORATION STOP AND OTHER FITTINGS SHALL BE SPIRAL WRAPPED WITH TWO (2) WRAPS OF TEFLON TAPE. ALL BRASS SHALL BE "LEAD FREE".
7. A 4" THICK COMPACTED 3/4" ROCK BASE IS REQUIRED. THE BASE SHALL EXTEND MINIMUM 12" BEYOND AUTOMATIC FLUSHING ASSEMBLY PAD PERIMETER.

AUTOMATIC FLUSHING ASSEMBLY (TYPE B)

44W

MIN. LENGTH OF PIPE (FEET) TO BE RESTRAINED

(SOURCES: EBAA IRON RESTRAINT LENGTH CALCULATION PROGRAM FOR PVC PIPE, RELEASE 3.1, AND DIPRA THRUST RESTRAINT FOR DUCTILE IRON PIPE, RELEASE 3.2)

| FITTING TYPE | | PIPE SIZE 4" | 6" | 8" | 10" | 12" | 16" | 20" | 24" | 200psi 30" | 36" | 42" | 48" |
|---|---|---|---|---|---|---|---|---|---|---|---|---|---|
| 90° HORIZ. BEND | | 14 | 20 | 25 | 30 | 35 | 45 | 54 | 62 | 98 | 112 | 124 | 135 |
| 45° HORIZ. BEND | | 6 | 8 | 11 | 13 | 15 | 19 | 22 | 26 | 41 | 46 | 51 | 56 |
| 22.5° HORIZ. BEND | | 3 | 4 | 5 | 6 | 7 | 9 | 11 | 12 | 19 | 22 | 25 | 27 |
| 11.25° HORIZ. BEND | | 1 | 2 | 3 | 3 | 4 | 5 | 6 | 10 | 11 | 12 | 13 | |
| 90° VERT. OFFSET | UPPER BEND | 29 | 41 | 53 | 64 | 74 | 95 | 115 | 134 | 214 | 246 | 276 | 304 |
| | LOWER BEND | 7 | 10 | 13 | 16 | 19 | 25 | 30 | 35 | 57 | 66 | 74 | 83 |
| 45° VERT. OFFSET | UPPER BEND | 12 | 19 | 24 | 29 | 34 | 39 | 48 | 56 | 89 | 102 | 114 | 126 |
| | LOWER BEND | 3 | 4 | 6 | 7 | 8 | 10 | 12 | 15 | 23 | 27 | 31 | 34 |
| 22.5° VERT. OFFSET | UPPER BEND | 6 | 9 | 12 | 14 | 17 | 19 | 23 | 27 | 43 | 49 | 55 | 60 |
| | LOWER BEND | 1 | 2 | 4 | 4 | 4 | 5 | 6 | 7 | 11 | 13 | 15 | 16 |
| 11.25° VERT. OFFSET | UPPER BEND | 3 | 4 | 6 | 7 | 8 | 9 | 11 | 13 | 21 | 24 | 27 | 30 |
| | LOWER BEND | 1 | 1 | 1 | 2 | 2 | 2 | 3 | 3 | 6 | 6 | 7 | 8 |
| PLUG (DEAD END) | | 32 | 45 | 59 | 70 | 83 | 107 | 129 | 151 | 214 | 246 | 276 | 304 |
| IN-LINE VALVE | | 32 | 45 | 45 | 45 | 45 | 55 | 65 | 80 | 110 | 125 | 140 | 155 |
| TEE (BRANCH RESTRAINT) | 4"x ø | 23 | – | – | – | – | – | – | – | – | – | – | – |
| | 6"x ø | 21 | 35 | – | – | – | – | – | – | – | – | – | – |
| | 8"x ø | 18 | 34 | 47 | – | – | – | – | – | – | – | – | – |
| | 10"x ø | 16 | 32 | 46 | 58 | – | – | – | – | – | – | – | – |
| | 12"x ø | 13 | 30 | 44 | 57 | 69 | – | – | – | – | – | – | – |
| | 16"x ø | 7 | 26 | 41 | 55 | 67 | 90 | – | – | – | – | – | – |
| | 20"x ø | 1 | 21 | 38 | 52 | 65 | 88 | 109 | – | – | – | – | – |
| | 24"x ø | 1 | 16 | 34 | 49 | 62 | 86 | 108 | 129 | – | – | – | – |
| | 30"x ø | 1 | 8 | 28 | 44 | 58 | 83 | 106 | 127 | 208 | – | – | – |
| | 36"x ø | 1 | 1 | 22 | 39 | 54 | 80 | 103 | 124 | 206 | 240 | – | – |
| | 42"x ø | 1 | 1 | 15 | 33 | 49 | 77 | 100 | 122 | 205 | 239 | 270 | – |
| | 48"x ø | 1 | 1 | 7 | 27 | 44 | 73 | 97 | 120 | 203 | 238 | 269 | 298 |
| REDUCER (LARGER PIPE RESTRAINT) | 6"x ø | 23 | – | – | – | – | – | – | – | – | – | – | – |
| | 8"x ø | 38 | 25 | – | – | – | – | – | – | – | – | – | – |
| | 10"x ø | 57 | 43 | 24 | – | – | – | – | – | – | – | – | – |
| | 12"x ø | 72 | 60 | 44 | 41 | – | – | – | – | – | – | – | – |
| | 16"x ø | 99 | 90 | 78 | 75 | 45 | – | – | – | – | – | – | – |
| | 20"x ø | 123 | 116 | 107 | 105 | 81 | 45 | – | – | – | – | – | – |
| | 24"x ø | 146 | 140 | 132 | 131 | 111 | 82 | 45 | – | – | – | – | – |
| 200psi | 30"x ø | 209 | 204 | 197 | 188 | 177 | 153 | 116 | 75 | – | – | – | – |
| | 36"x ø | 243 | 236 | 233 | 226 | 217 | 196 | 168 | 135 | 74 | – | – | – |
| | 42"x ø | 273 | 270 | 265 | 259 | 252 | 234 | 211 | 183 | 133 | 72 | – | – |
| | 48"x ø | 301 | 298 | 294 | 289 | 283 | 268 | 249 | 226 | 183 | 131 | 71 | – |

NOTES:

1. THE DATA IN THE ABOVE TABLE ARE BASED UPON THE FOLLOWING INSTALLATION CONDITIONS:
   SOIL TYPE-SAND TEST PRESSURE-150 PSI/200 PSI DEPTH OF BURY-3'
   TRENCH TYPE-3 SAFETY FACTOR- 1.5 VERTICAL OFFSET-3'
   MINIMUM PIPE LENGTH ALONG TEE RUN-5'
2. THE RESTRAINED PIPE LENGTHS APPLY TO DUCTILE IRON AND PVC PIPE.
3. ALL JOINTS BETWEEN UPPER AND LOWER BENDS SHALL BE RESTRAINED.
4. RESTRAINED PIPE LENGTHS APPLY TO PIPE ON BOTH SIDES OF VALVES AND FITTINGS.
5. MULTIPLY PIPE LENGTH BY 1.4 FOR POLYETHYLENE ENCASED PIPE.
6. RESTRAINED PIPE LENGTHS EQUAL TO AN "INLINE VALVE" CONDITION ARE REQUIRED AT EACH END OF A TRANSITION FROM HDPE PIPE TO OTHER PIPE MATERIALS.
7. DESIGN ENGINEER IS RESPONSIBLE TO PROPERLY SIZE THE RESTRAINT PIPE LENGTHS FOR THE PROJECT

MECHANICAL THRUST RESTRAINT MINIMUM PIPE LENGTHS

34W

MAXIMUM QUANTITY OF WATER (GALLONS PER HOUR) THAT MAY BE SUPPLIED TO MAINTAIN PRESSURE WITHIN 5 P.S.I. OF THE SPECIFIED TEST PRESSURE

(MECHANICAL OR PUSH-ON JOINT, 18 FT. NOMINAL LENGTHS, PER 1000 FT. OF PIPE)

| AVG. TEST PRESSURE PSI | PIPE DIAMETER (INCHES) 2 | 3 | 4 | 6 | 8 | 10 | 12 | 14 | 16 | 18 | 20 | 24 | 30 | 36 | 42 | 48 |
|---|---|---|---|---|---|---|---|---|---|---|---|---|---|---|---|---|
| 150 | 0.10 | 0.14 | 0.18 | 0.27 | 0.37 | 0.46 | 0.55 | 0.64 | 0.73 | 0.83 | 0.92 | 1.10 | 1.38 | 1.65 | 1.93 | 2.20 |
| 200 | 0.10 | 0.15 | 0.21 | 0.31 | 0.42 | 0.53 | 0.63 | 0.74 | 0.84 | 0.95 | 1.06 | 1.27 | 1.59 | 1.91 | 2.22 | 2.54 |

FORMULA BASIS: $L = \frac{(S) \times (D) \times (P)^{1/2}}{148{,}000} \times 1/2$

L = MAXIMUM QUANTITY OF WATER TO BE ADDED (GALLONS PER HOUR)
S = LENGTH OF PIPE TESTED (FEET)
D = DIAMETER OF PIPE (INCHES)
P = TEST PRESSURE (P.S.I.)

NOTES:

1. TO OBTAIN THE MAXIMUM QUANTITY OF WATER FOR PIPE WITH 20 FT. NOMINAL LENGTHS, MULTIPLY THE QUANTITY CALCULATED FROM THE TABLE BY 0.9
2. THE MAXIMUM QUANTITY OF ADDED WATER FOR A PIPELINE IS CALCULATED BY MULTIPLYING THE QUANTITY PER HOUR AS OBTAINED FROM THE ABOVE TABLE, BY THE DURATION OF THE TEST IN HOURS,AND BY THE TOTAL LENGTH OF THE LINE BEING TESTED DIVIDED BY 1,000. IF THE LINE UNDER TEST CONTAINS SECTIONS OF VARIOUS DIAMETERS, THE MAXIMUM QUANTITY ADDED WILL BE THE SUM OF THE COMPUTED QUANTITIES FOR EACH SIZE.
3. MAXIMUM TEST LENGTH = 2,500 FEET PER SECTION.
4. THIS STANDARD SHALL REFLECT ANY REVISION OF A.W.W.A. C-600. HOWEVER, THE MAXIMUM QUANTITY OF WATER ADDED SHALL NOT EXCEED 50% OF THE RECOMMENDED LIMIT PER APPLICABLE AWWA C-600 STANDARD.
5. STANDARD TEST PRESSURE = 150 P.S.I.; 200 P.S.I. FOR MAINS LARGER THAN 24"
6. PRESSURE TEST DURATION TO BE MIN. 2 HOURS.

POTABLE WATER MAIN PRESSURE TEST CRITERIA

31W

POTABLE WATER #4
STANDARD DETAILS

CONSULTANT:
Kimley»Horn

IT'S THE LAW ! CALL 48 HOURS BEFORE YOU DIG
1-800-432-4770
SUNSHINE STATE ONE CALL OF FLORIDA, INC.
UTILITIES NOTIFICATION CENTER

DESIGNED BY: WUD
DRAWN BY: WUD CADD
CHECKED BY: A. GALICKI
APPROVED BY: WUD

MICHAEL D. SPRUCE, P.E.
52776
Palm Beach County
Water Utilities Department
P.O.Box 16097
West Palm Beach, FL 33416-6097

Jan 15, 2021

PROJECT NO. 149658011

FONTANA

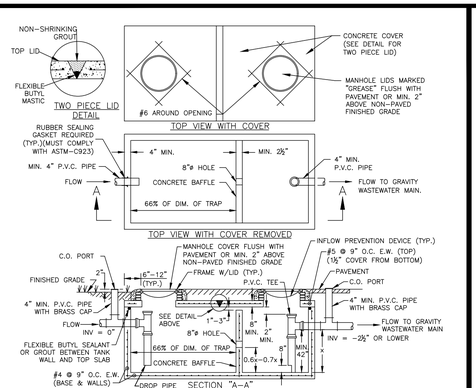


NOTES:

1. GREASE INTERCEPTORS SHALL BE WATERTIGHT AND SHALL BE BUILT OF PRE CAST CONCRETE WHICH HAS A DESIGN COMPRESSIVE STRENGTH OF MINIMUM 3000 PSI AFTER 28 DAYS CURE. THE DESIGN, SIZING AND CONSTRUCTION MUST CONFORM TO THIS STANDARD AND TO ALL APPLICABLE BUILDING CODE AND HEALTH DEPARTMENT REQUIREMENTS AND REGULATIONS, INCLUDING, BUT NOT LIMITED TO CHAPTER 64E-6, FLORIDA ADMINISTRATIVE CODE. WALL AND SLAB THICKNESS SHOWN ARE MINIMUMS, AND SHALL BE DETERMINED BY THE OWNERS ENGINEER. THE CONCRETE BOX SHALL HAVE PRE CAST HOLES AND CAST-IN BOOTS WHENEVER POSSIBLE.
2. THE OIL/GREASE INTERCEPTOR SHALL BE USED FOR APPLICATIONS EXCEEDING 25 GPM FLOW RATE, DETERMINED USING THE PLUMBING AND DRAINAGE INSTITUTE PDI G101 STANDARD. A DESIGN CALCULATION MUST BE SUBMITTED FOR APPROVAL WITH A SHOP DRAWING PRIOR TO THE PRE-CONSTRUCTION MEETING. FOR APPLICATIONS UP TO 25 GPM FLOW RATE (ONE MINUTE FLOW) OR 50 GPM (TWO MINUTE FLOW), AN APPROVED OUTDOOR "GREASE TRAP" MAY BE USED; OTHER DESIGNS MAY BE CONSIDERED UPON SUBMITTAL AND APPROVAL OF SHOP DRAWINGS.
3. INSPECTION PORTS (CLEAN OUTS) SHALL BE EASILY ACCESSIBLE FOR INSPECTION/SAMPLING.
4. THE INTERCEPTOR AND CLEAN-OUTS PORT SHALL BE LOCATED OUTDOORS AND IN NON-TRAFFIC AREA WHENEVER POSSIBLE. THE SURFACE SURROUNDING THE INTERCEPTOR SHALL BE SLOPED TO DRAIN STORM WATER AWAY FROM THE INTERCEPTOR.
5. THE CAPACITY DETERMINATION FOR THE INTERCEPTOR IS THE RESPONSIBILITY OF THE OWNER/CUSTOMER. THE MINIMUM VOLUME OF ANY GREASE INTERCEPTOR SHALL BE 750 GALLONS AND THE MAXIMUM VOLUME OF A SINGLE GREASE INTERCEPTOR SHALL BE 1250 GALLONS. WHEN THE REQUIRED EFFECTIVE CAPACITY OF THE INTERCEPTOR IS GREATER THAN 1250 GALLONS, INSTALLATION OF MULTIPLE GREASE INTERCEPTORS IN SERIES IS REQUIRED.
6. NO BAFFLE IS REQUIRED IF THERE ARE MULTIPLE GREASE INTERCEPTORS INSTALLED IN SERIES. HOWEVER, CLEANOUT PORTS MUST BE INSTALLED ON EACH END OF EACH INTERCEPTOR.
7. THE PROPERTY OWNER/CUSTOMER SHALL BE RESPONSIBLE FOR THE OPERATION AND MAINTENANCE OF THE INTERCEPTOR.
8. THE GREASE INTERCEPTOR SHALL NOT BE USED FOR THE PURPOSE OF INTERCEPTING SAND AND OIL FROM NON-FOOD HANDLING ESTABLISHMENTS.
9. EACH FACILITY WITH AN OIL/GREASE INTERCEPTOR SHALL HAVE A SEPARATE (NOT SHARED) INTERCEPTOR AND SHALL BE INDIVIDUALLY METERED THROUGH THE DEPARTMENT.
10. A "GREASE TRAP" OR "OIL/GREASE INTERCEPTOR" SHALL BE REQUIRED TO RECEIVE THE DRAINAGE FROM FIXTURES AND EQUIPMENT (SINKS, DISHWASHERS, FLOOR DRAINS, CAN WASH AREAS, ETC.) WITH GREASE LADEN WASTE LOCATED IN COMMERCIAL FOOD PREPARATION AREAS SUCH AS RESTAURANTS, HOTEL KITCHENS, HOSPITALS, SCHOOL KITCHENS, BARS, FACTORY CAFETERIAS, CLUBS, ETC.
11. THE "GREASE TRAP" OR "OIL/GREASE INTERCEPTOR" SHALL BE LOCATED AS CLOSE AS PRACTICALLY POSSIBLE TO THE FIXTURES AND EQUIPMENT GENERATING GREASE.
12. A "SOLIDS INTERCEPTOR" SHALL BE CONSIDERED TO BE INSTALLED UPSTREAM OF A " GREASE TRAP" WHERE SUBSTANTIAL AMOUNT OF SOLIDS FROM FOOD GRINDERS, DISPOSALS MAY BE PRESENT.
13. MANHOLE COVER SHALL BE MACHINED TO ACCEPT INFLOW PROTECTOR.

## OIL/ GREASE INTERCEPTOR * 1S

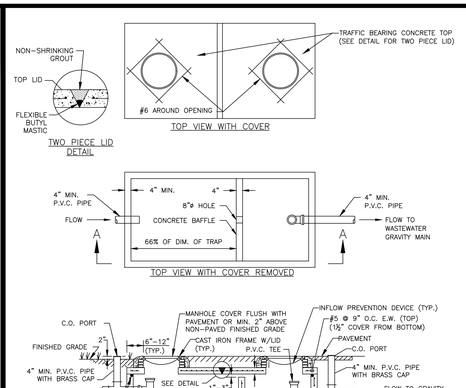


NOTES:

1. SAND/OIL INTERCEPTORS SHALL BE WATERTIGHT AND SHALL BE BUILT OF PRECAST CONCRETE WHICH HAS A DESIGN COMPRESSIVE STRENGTH OF MINIMUM 3000 PSI AFTER 28 DAYS CURE. THE DESIGN, SIZING AND CONSTRUCTION MUST CONFORM TO THIS STANDARD AND TO ALL APPLICABLE BUILDING CODE AND HEALTH DEPARTMENT REQUIREMENTS AND REGULATIONS, INCLUDING, BUT NOT LIMITED TO CHAPTER 64E-6, FLORIDA ADMINISTRATIVE CODE. WALL AND SLAB THICKNESS SHOWN ARE MINIMUMS, AND SHALL BE DETERMINED BY THE OWNERS ENGINEER. THE CONCRETE BOX SHALL HAVE PRECAST HOLES AND CAST-IN BOOTS WHENEVER POSSIBLE.
2. SHOP DRAWINGS ARE REQUIRED PRIOR TO PRECONSTRUCTION MEETING. OTHER DESIGNS MAY BE USED UPON SUBMITTAL AND APPROVAL OF SHOP DRAWINGS.
3. INSPECTION PORTS (CLEAN OUTS) SHALL BE EASILY ACCESSIBLE FOR INSPECTION/SAMPLING.
4. THE INTERCEPTOR SHALL BE LOCATED IN GRASS AREA/NON-TRAFFIC AREA WHENEVER POSSIBLE. THE SURFACE SURROUNDING THE INTERCEPTOR SHALL BE SLOPED TO DRAIN STORM WATER AWAY FROM THE INTERCEPTOR.
5. THE CAPACITY DETERMINATION FOR THE INTERCEPTOR IS THE RESPONSIBILITY OF THE OWNER/CUSTOMER. THE MINIMUM VOLUME OF A SAND/OIL INTERCEPTOR SHALL BE 750 GALLONS. WHEN THE REQUIRED EFFECTIVE CAPACITY OF THE SAND/OIL INTERCEPTOR IS GREATER THAN 750 GALLONS, INSTALLATION OF SINGLE COMPARTMENT SAND/OIL INTERCEPTORS IN SERIES IS REQUIRED.
6. THE PROPERTY OWNER/CUSTOMER SHALL BE RESPONSIBLE FOR THE OPERATION AND MAINTENANCE OF THE INTERCEPTOR.
7. SAND/OIL INTERCEPTOR SHALL NOT BE USED FOR THE PURPOSE OF INTERCEPTION OF GREASE FROM FOOD HANDLING ESTABLISHMENTS.
8. EACH FACILITY REQUIRED TO HAVE A SAND/OIL INTERCEPTOR SHALL HAVE A SEPARATE INTERCEPTOR AND SHALL BE INDIVIDUALLY METERED THROUGH THE DEPARTMENT.
9. MANHOLE LIDS SHALL BE MACHINED TO ACCEPT INFLOW PREVENTER.

## SAND/ OIL INTERCEPTOR * 2S

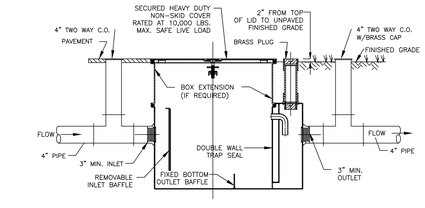


NOTES:

1. THE GREASE TRAP SHALL BE WATERTIGHT AND GAS TIGHT AND SHALL BE FABRICATED FROM STEEL, ACID RESISTANT COATED INTERIOR AND EXTERIOR.
2. THE GREASE TRAP SHALL BE CERTIFIED AND TAGGED BY THE SEAL OF THE PLUMBING AND DRAINAGE INSTITUTE (PDI), AND PDI RATED AT 50 GPM FLOW RATE AND 100 LBS. GREASE CAPACITY. THE GREASE TRAP SIZE, DESIGN AND INSTALLATION MUST COMPLY OR EXCEED THE APPLICABLE BUILDING CODES AND REGULATIONS.
3. THE GREASE TRAP MAY BE USED IF AN OIL/GREASE INTERCEPTOR IS NOT REQUIRED AND ONLY FOR APPLICATIONS UP TO 25 GPM FLOW RATE (ONE MINUTE FLOW) OR 50 GPM (TWO MINUTE FLOW), DETERMINED USING THE PDI G 101 STANDARD. FOR HIGHER FLOW RATES OR GREASE CAPACITY GREATER THAN 50 LBS., AN APPROVED "OIL/GREASE INTERCEPTOR" WILL BE REQUIRED. A DESIGN CALCULATION SHALL BE SUBMITTED FOR APPROVAL WITH A SHOP DRAWING PRIOR TO PRE-CONSTRUCTION MEETING. THE SHOP DRAWING SHALL BE SIGNED BY THE DESIGNING ENGINEER AND BY THE CONTRACTOR. THE PROJECT NAME WITH STREET ADDRESS OF THE FACILITY (IF AVAILABLE) SHALL BE SHOWN ON THE SHOP DRAWING. OTHER DESIGNS MAY BE USED UPON APPROVAL OF SHOP DRAWINGS.
4. THE GREASE TRAP SHALL BE LOCATED OUTDOORS, EASY ACCESSIBLE FOR MAINTENANCE AND SAMPLING, PREFERABLY IN GRASS AREA, NOT IN TRAFFIC AREA, PARKING SPACES OR SIDEWALKS. THE SURFACE SURROUNDING THE GREASE TRAP SHALL BE SLOPED TO DRAIN STORM WATER AWAY FROM THE GREASE TRAP.
5. THE GREASE TRAP SHALL NOT BE USED FOR THE PURPOSE OF INTERCEPTING SAND AND OIL FROM NON-FOOD HANDLING ESTABLISHMENTS.
6. THE PROPERTY OWNER/CUSTOMER SHALL BE RESPONSIBLE FOR THE OPERATION AND MAINTENANCE OF THE GREASE TRAP.
7. EACH FACILITY WITH A GREASE TRAP SHALL BE INDIVIDUALLY METERED THROUGH THE DEPARTMENT.
8. EACH FACILITY WHICH IS REQUIRED TO INSTALL A GREASE TRAP SHALL HAVE A SEPARATE (NOT SHARED) GREASE TRAP.
9. INSPECTION PORTS (TWO-WAY CLEAN OUTS) SHALL BE EASILY ACCESSIBLE FOR INSPECTION AND SAMPLING.
10. A "GREASE TRAP" OR "OIL/GREASE INTERCEPTOR" SHALL BE REQUIRED TO RECEIVE THE DRAINAGE FROM FIXTURES AND EQUIPMENT (SINKS, DISHWASHERS, FLOOR DRAINS, CAN WASH AREAS, ETC.) WITH GREASE LADEN WASTE LOCATED IN COMMERCIAL FOOD PREPARATION AREAS SUCH AS RESTAURANTS, HOTEL KITCHENS, HOSPITALS, SCHOOL KITCHENS, BARS, FACTORY CAFETERIAS, CLUBS, ETC.
11. THE "GREASE TRAP" OR "OIL/GREASE INTERCEPTOR" SHALL BE LOCATED AS CLOSE AS PRACTICALLY POSSIBLE TO THE FIXTURES AND EQUIPMENT GENERATING GREASE.
12. GREASE TRAPS SHALL BE EQUIPPED WITH DEVICES TO CONTROL THE RATE OF FLOW, SO THE RATE OF THE FLOW DO NOT EXCEED 25 GPM. THE FLOW CONTROL DEVICE SHALL BE INSTALLED IN ACCORDANCE WITH THE CODE AND MANUFACTURER'S INSTRUCTIONS.
13. A "SOLIDS INTERCEPTOR" SHALL BE CONSIDERED TO BE INSTALLED UPSTREAM OF A " GREASE TRAP" WHERE SUBSTANTIAL AMOUNT OF SOLIDS FROM FOOD GRINDERS, DISPOSALS MAY BE PRESENT.

## GREASE TRAP * 3S

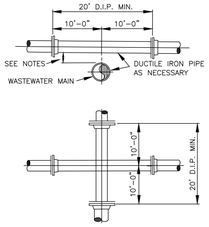


NOTES:

1. STORM SEWER, GRAVITY WASTEWATER AND RECLAIMED WATER MAIN CROSSING UNDER POTABLE WATER MAINS SHALL BE LAID TO PROVIDE A MINIMUM VERTICAL DISTANCE OF TWELVE (12) INCHES BETWEEN THE INVERT OF THE UPPER PIPE AND THE CROWN OF THE LOWER PIPE. WHERE THIS MINIMUM SEPARATION CANNOT BE MAINTAINED, THE CROSSING SHALL BE ARRANGED SO THAT THE STORM/WASTEWATER/RECLAIMED WATER PIPE JOINTS AND POTABLE WATER MAIN JOINTS ARE EQUIDISTANT FROM THE POINT OF CROSSING WITH NO LESS THAN TEN (10) FEET BETWEEN ANY TWO JOINTS, BOTH PIPES SHALL BE D.I.P., AND THE MINIMUM VERTICAL SEPARATION SHALL BE 6 INCHES. WHERE THERE IS NO ALTERNATIVE TO STORM/WASTEWATER/RECLAIMED WATER PIPES CROSSING OVER A POTABLE WATER MAIN, THE CRITERIA FOR MINIMUM 12" VERTICAL SEPARATION BETWEEN LINES AND JOINT ARRANGEMENT, AS STATED ABOVE, SHALL BE REQUIRED, AND BOTH PIPES SHALL BE D.I.P. IRRESPECTIVE OF SEPARATION. D.I.P. IS NOT REQUIRED FOR STORM SEWERS.
2. WHENEVER POSSIBLE MAINTAIN MIN. TEN (10) FEET HORIZONTAL DISTANCE (WALL TO WALL) BETWEEN POTABLE WATER MAIN AND STORM SEWER, WASTEWATER MAIN, OR FORCE MAIN (A MIN. 6" SEPARATION MAY BE APPROVED ON A CASE BY CASE BASIS). MAINTAIN MIN. THREE (3) FEET HORIZONTAL DISTANCE (WALL TO WALL) BETWEEN RECLAIMED WATER MAIN AND POTABLE WATER MAIN, STORM SEWER, WASTEWATER GRAVITY MAIN OR FORCE MAIN.
3. FORCE MAIN CROSSING POTABLE WATER MAIN OR RECLAIMED WATER MAIN SHALL BE LAID TO PROVIDE A MINIMUM VERTICAL DISTANCE OF TWELVE (12) INCHES BETWEEN THE OUTSIDE OF THE FORCE MAIN AND OUTSIDE OF THE POTABLE WATER MAIN OR RECLAIMED WATER MAIN WITH THE POTABLE WATER MAIN OR RECLAIMED WATER MAIN CROSSING OVER THE FORCE MAIN.
4. WASTEWATER LATERALS SHALL CROSS UNDER POTABLE WATER MAINS WITH A MIN. 12" VERTICAL SEPARATION WHENEVER POSSIBLE. WHERE THIS MINIMUM SEPARATION CANNOT BE MAINTAINED, A 20' SECTION OF DUCTILE IRON PIPE POTABLE WATER MAIN CENTERED ON THE CROSSING IS REQUIRED AND THE MINIMUM VERTICAL SEPARATION SHALL BE 6". WHERE THERE IS NO ALTERNATIVE TO A WASTEWATER LATERAL PIPE CROSSING OVER A POTABLE WATER MAIN, A MINIMUM 12" VERTICAL SEPARATION IS REQUIRED, THE LATERAL SHALL BE P.V.C. C-900 SDR18 OR BETTER, THE POTABLE WATER MAIN SHALL BE D.I.P. AND THE PIPE JOINTS SHALL BE EQUIDISTANT FROM THE POINT OF CROSSING.
5. POTABLE WATER SERVICE LINES SHALL CROSS OVER WASTEWATER MAINS WITH MIN. 12" VERTICAL SEPARATION. WHERE THIS MIN. SEPARATION CAN NOT BE MAINTAINED, THE WATER SERVICE SHALL BE ENCASED IN A MIN. 10' LONG CASING CENTERED OVER THE CROSSING WITH MIN. 6" VERTICAL SEPARATION.
6. WASTEWATER MAINS, WATER MAINS, STORM PIPES AND OTHER UTILITY PIPES SHALL CROSS PERPENDICULAR WHENEVER POSSIBLE.

## POTABLE WATER, WASTEWATER MAIN AND STORM SEWER CONFLICT 4S

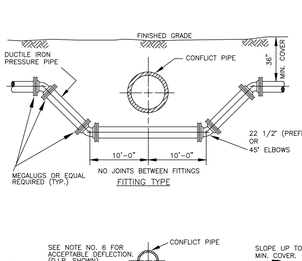


NOTES:

1. STORM SEWER, GRAVITY WASTEWATER AND RECLAIMED WATER MAIN CROSSING UNDER POTABLE WATER MAINS SHALL BE LAID TO PROVIDE A MINIMUM VERTICAL DISTANCE OF TWELVE (12) INCHES BETWEEN THE INVERT OF THE UPPER PIPE AND THE CROWN OF THE LOWER PIPE. WHERE THIS MINIMUM SEPARATION CANNOT BE MAINTAINED, THE CROSSING SHALL BE ARRANGED SO THAT THE STORM/WASTEWATER/RECLAIMED WATER PIPE JOINTS AND POTABLE WATER MAIN JOINTS ARE EQUIDISTANT FROM THE POINT OF CROSSING WITH NO LESS THAN TEN (10) FEET BETWEEN ANY TWO JOINTS, BOTH PIPES SHALL BE D.I.P., AND THE MINIMUM VERTICAL SEPARATION SHALL BE 6 INCHES. WHERE THERE IS NO ALTERNATIVE TO STORM/WASTEWATER/RECLAIMED WATER PIPES CROSSING OVER A POTABLE WATER MAIN, THE CRITERIA FOR MINIMUM 12" VERTICAL SEPARATION BETWEEN LINES AND JOINT ARRANGEMENT, AS STATED ABOVE, SHALL BE REQUIRED, AND BOTH PIPES SHALL BE D.I.P. IRRESPECTIVE OF SEPARATION. D.I.P. IS NOT REQUIRED FOR STORM SEWERS.
2. WHENEVER POSSIBLE MAINTAIN MIN. TEN (10) FEET HORIZONTAL DISTANCE (WALL TO WALL) BETWEEN POTABLE WATER MAIN AND STORM SEWER, WASTEWATER MAIN, OR FORCE MAIN (A MIN. 6" SEPARATION MAY BE APPROVED ON A CASE BY CASE BASIS.) MAINTAIN MIN. THREE (3) FEET HORIZONTAL DISTANCE (WALL TO WALL) BETWEEN RECLAIMED WATER MAIN AND POTABLE WATER MAIN, STORM SEWER, WASTEWATER GRAVITY MAIN OR FORCE MAIN.
3. FORCE MAIN CROSSING POTABLE WATER MAIN OR RECLAIMED WATER MAIN SHALL BE LAID TO PROVIDE A MINIMUM VERTICAL DISTANCE OF TWELVE (12) INCHES BETWEEN THE OUTSIDE OF THE FORCE MAIN AND OUTSIDE OF THE POTABLE WATER MAIN OR RECLAIMED WATER MAIN CROSSING OVER THE FORCE MAIN.
4. FITTINGS SHALL BE RESTRAINED.
5. THE DEFLECTION TYPE CROSSING IS PREFERRED.
6. DO NOT EXCEED 75% OF MANUFACTURERS RECOMMENDED MAXIMUM JOINT DEFLECTION FOR DUCTILE IRON PIPE. PVC PIPE CURVATURE MAY ONLY BE ACCOMPLISHED BY INSTALLING APPROPRIATE BENDS.
7. ALL EXPOSED TIE STEEL SHALL BE COATED WITH COAL-TAR EPOXY.
8. POTABLE WATER SERVICE LINES SHALL CROSS OVER WASTEWATER MAINS WITH MIN. 12" VERTICAL SEPARATION. WHERE THIS MIN. SEPARATION CAN NOT BE MAINTAINED, THE WATER SERVICE SHALL BE ENCASED IN A MIN. 10' LONG CASING CENTERED OVER THE CROSSING WITH MIN. 6" VERTICAL SEPARATION.
9. WASTEWATER MAINS, WATER MAINS, STORM PIPES AND OTHER UTILITY PIPES SHALL CROSS PERPENDICULAR WHENEVER POSSIBLE.

## POTABLE WATER MAIN/FORCE MAIN PRESSURE PIPE CONFLICT 5S

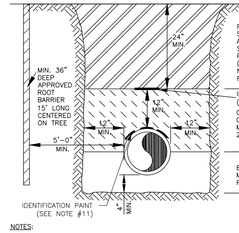


NOTES:

1. BEDDING SHALL CONSIST OF IN-SITU GRANULAR MATERIAL OR WASHED AND GRADED LIMEROCK 3/8" - 7/8" SIZING. UNSUITABLE IN-SITU MATERIALS SUCH AS MUCK, DEBRIS AND LARGER ROCKS SHALL BE REMOVED.
2. THE PIPE SHALL BE FULLY SUPPORTED FOR ITS ENTIRE LENGTH WITH APPROPRIATE COMPACTION UNDER THE PIPE HAUNCHES.
3. THE PIPE SHALL BE PLACED IN A DRY TRENCH.
4. BACKFILL SHALL BE FREE OF UNSUITABLE MATERIAL SUCH AS LARGE ROCK, MUCK AND DEBRIS.
5. DENSITY TESTS ARE REQUIRED IN 1 FOOT LIFTS ABOVE THE PIPE AT INTERVALS OF 400' MAXIMUM, MINIMUM 1 SET OF TESTS FOR EACH WASTEWATER GRAVITY MAIN RUN, OR AS DIRECTED BY THE INSPECTOR.
6. THE DEVELOPER/CONTRACTOR SHALL BE RESPONSIBLE TO COMPLY WITH ALL TRENCH SAFETY LAWS AND REGULATIONS.
7. SEE SEPARATE DETAILS FOR "PIPE INSTALLATION UNDER EXISTING PAVEMENT - OPEN CUT."
8. THE AFFECTED AREA SHALL BE RESTORED TO EQUAL OR BETTER CONDITION OR AS SPECIFIED IN PERMIT/CONTRACT DOCUMENTS.
9. APPROVED MAGNETIC TAPE IS REQUIRED FOR: ALL POTABLE WATER MAINS, FORCE MAINS AND RECLAIMED WATER MAINS. THE TAPE SHALL BE INSTALLED MAX. 24" BELOW FINISHED GRADE.
10. ROOT BARRIER IS REQUIRED FOR APPROVED TREE INSTALLATION CLOSER THAN 10 FEET FROM UTILITY FACILITIES.
11. CONTINUOUS 4" WIDE PAINT STRIPING IS REQUIRED FOR DIP/PCCP WATER MAINS (BLUE), DIP SEWER MAINS (GREEN), AND DIP RECLAIMED WATER MAINS (PURPLE).
12. PERMANENT ABOVE GROUND UTILITY MARKER SHALL BE INSTALLED IF REQUIRED BY PROPERTY OWNER GRANTING THE PIPE INSTALLATION PERMIT.
13. FOR PIPE INSTALLATIONS IN ROAD RIGHTS-OF-WAY, ROAD OWNER'S PERMIT SPECIFICATIONS SHALL APPLY.

## TYPICAL TRENCH DETAIL ROOT BARRIER INSTALLATION 8S

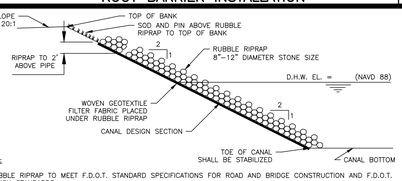


NOTES:

1. RUBBLE RIPRAP TO MEET F.D.O.T. STANDARD SPECIFICATIONS FOR ROAD AND BRIDGE CONSTRUCTION AND F.D.O.T. DESIGN STANDARDS.
2. DUMP RUBBLE IN PLACE FORMING A COMPACT LAYER CONFORMING TO THE CANAL DESIGN SECTION SLOPE. ENSURE THAT RUBBLE DOES NOT SEGREGATE SO THAT SMALLER PIECES EVENLY FILL THE VOIDS BETWEEN LAGER PIECES.
3. ALTERNATIVE DESIGN WILL BE CONSIDERED, SUBJECT TO APPROVAL BY THE CANAL PROPERTY OWNER.

## RUBBLE RIPRAP DETAIL 83S

CONSTRUCTION PROCEDURES

THE BACKFILL FOR THE FIRST AND SECOND STAGES SHALL BE PLACED IN 6" LIFTS (COMPACTED THICKNESS) AND SHALL BE COMPACTED TO 100% OF MAXIMUM DENSITY AS DETERMINED BY AASHTO T-99.

STAGE 1:

THE CONTRACTOR SHALL PROVIDE ADEQUATE COMPACTED FILL BENEATH THE HAUNCHES OF THE PIPE, USING MECHANICAL TAMPS SUITABLE FOR THIS PURPOSE. THIS COMPACTION APPLIES TO THE MATERIAL PLACED BENEATH THE HAUNCHES OF THE PIPE AND ABOVE ANY BEDDING REQUIRED.

STAGE 2:

THE CONTRACTOR SHALL OBTAIN A WELL-COMPACTED BED AND FILL ALONG THE SIDES OF THE PIPE AND TO A POINT INDICATING THE TOP OF SUB-GRADE MATERIAL.

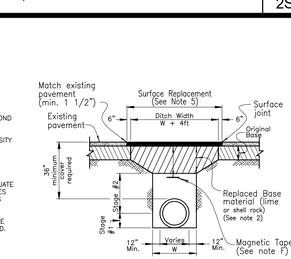


REPLACEMENT OF FLEXIBLE PAVEMENT FOR PERMITTED PAVEMENT CUT

CONSTRUCTION NOTES

1) BEDDING SHALL CONSIST OF IN-SITU GRANULAR MATERIAL OR WASHED AND GRADED LIMEROCK 3/8" - 7/8" SIZING WITH EQUAL OR GREATER STRUCTURAL ADEQUACY AS EXISTING. UNSUITABLE IN-SITU MATERIALS SUCH AS MUCK, DEBRIS AND LARGER ROCKS SHALL BE REMOVED.
2) REPLACED BASE MATERIAL (PER LAND DEVELOPMENT DESIGN STANDARDS) OVER DITCH SHALL BE TWICE THE THICKNESS OF THE ORIGINAL BASE OR 12" MINIMUM, WHICHEVER IS GREATER.
3) ASPHALT CONCRETE PAVEMENT JOINTS SHALL BE MECHANICALLY SAWED AND BUTT-JOINTED.
4) BASE MATERIAL SHALL BE PLACED IN TWO OR THREE LAYERS (6" MAX. PER LAYER) AND EACH LAYER THOROUGHLY ROLLED OR TAMPED TO THE SPECIFIED DENSITY.
5) SURFACE MATERIAL WILL BE CONSISTENT WITH THE EXISTING SURFACE OR 1 1/2" SI ASPHALTIC CONCRETE WITH RC-70 PRIME COAT AT 0.10 GAL/SQ. YD.
6) PIPE SHALL BE PLACED IN A DRY TRENCH.

GENERAL NOTES

A) ALL ROADWAY REPAIR WORK SHALL BE PERFORMED IN CONFORMANCE WITH APPLICABLE FDOT STANDARD SPECIFICATIONS FOR ROAD AND BRIDGE CONSTRUCTION AND COUNTY PPM# EL-0-3606.
B) DENSITY TESTS SHALL BE TAKEN IN 1 FT LIFTS ABOVE THE PIPE AT INTERVALS OF 400 FT MAXIMUM (1 SET MINIMUM) OR AS DIRECTED BY THE CONSTRUCTION COORDINATION DIVISION. RESULTS SHALL BE SUBMITTED TO CONSTRUCTION COORDINATION DIVISION AS PART OF THEIR FIELD REVIEW.
C) ENGINEER-OF-RECORD SHALL PROVIDE FULL-TIME INSPECTION DURING THE ENTIRETY OF THE OPEN-CUT OPERATION, BEGINNING WITH THE EXCAVATION AND CONTINUING THROUGH THE COMPLETION OF THE PAVING.
D) IF THE PAVEMENT IS NOT COMPLETELY RESTORED IMMEDIATELY FOLLOWING THE OPEN CUT, A SMOOTH TEMPORARY PATCH (MINIMUM 1.25" ASPHALT) SHALL BE INSTALLED, PROPERLY MATCHING THE EXISTING GRADING OF THE ROADWAY. THE TEMPORARY PATCH SHALL BE ALLOWED TO REMAIN IN PLACE AND BE MAINTAINED FOR A PERIOD NO LONGER THAN 45 DAYS. THE COUNTY RETAINS THE RIGHT TO USE POSTED SURETY TO COMPLETE ANY RESTORATION WORK THAT HAS NOT BEEN COMPLETED IN THE 45 DAYS PERIOD. ALTERNATIVE TEMPORARY TRENCH PROTECTION (STEEL PLATES OR OTHERS) MAY BE APPROVED BY THE CONSTRUCTION COORDINATION DIVISION.
E) FOR THE FINAL RESTORATION, THE ROAD SHALL BE MILLED AND RESURFACED WITH 1-1/2" (ONE AND A HALF INCH) OF SIII OR SI ASPHALT SURFACE COURSE FOR A FULL LANE WIDTH ENCROACHED BY THE TRENCH.
F) APPROVED MAGNETIC TAPE IS REQUIRED FOR ALL MAIN PRESSURE PIPES AND CONDUIT IN THE COUNTY'S RIGHT-OF-WAY. INSTALL TAPE 24" BELOW FINISHED GRADE.
G) CONTINUOUS 4" WIDE PAINT STRIPING IS REQUIRED FOR DIP/PCCP WATER MAINS (BLUE), DIP SANITARY MAINS (GREEN), DIP RECLAIMED WATER MAINS (PURPLE), GAS MAINS (YELLOW), OR AS REQUIRED BY THE APWA.

## OPEN CUT PIPE INSTALLATION NON-THOROUGHFARE ROAD 6S

CONSTRUCTION PROCEDURES

THE BACKFILL FOR THE FIRST AND SECOND STAGES SHALL BE PLACED IN 6" LIFTS (COMPACTED THICKNESS) AND SHALL BE COMPACTED TO 100% OF MAXIMUM DENSITY AS DETERMINED BY AASHTO T-99.

STAGE 1:

THE CONTRACTOR SHALL PROVIDE ADEQUATE COMPACTED FILL BENEATH THE HAUNCHES OF THE PIPE, USING MECHANICAL TAMPS SUITABLE FOR THIS PURPOSE. THIS COMPACTION APPLIES TO THE MATERIAL PLACED BENEATH THE HAUNCHES OF THE PIPE AND ABOVE ANY BEDDING REQUIRED.

STAGE 2:

THE CONTRACTOR SHALL OBTAIN A WELL-COMPACTED BED AND FILL ALONG THE SIDES OF THE PIPE AND TO A PO

THIS SPACE INTENTIONALLY LEFT BLANK

*

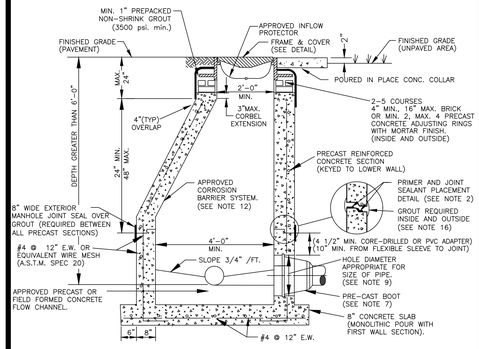


NOTES:

1. PRECAST CONCRETE TYPE II 4000 P.S.I. CALCAREOUS AGGREGATE REQUIRED (MIN. CaCO3 CONTENT: 65% IN LARGE AGGREGATE, 50% IN CONCRETE SCREENING).
2. INSTALL APPROVED JOINT SEALANT AT ALL RISER JOINTS WITH GROUT ON INSIDE AND OUTSIDE. MANHOLE SHOP DRAWINGS SHALL INCLUDE THE SIZE AND PLACEMENT OF JOINT SEALANT. AN APPROVED JOINT PRIMER SHALL BE APPLIED BY THE PRECASTER (TONGUE SECTION ONLY).
3. ALL OPENINGS SHALL BE SEALED WITH A WATERPROOF NON-SHRINKING GROUT.
4. FLOW CHANNELS SHALL BE PRECAST OR FIELD CONSTRUCTED TO DIRECT INFLUENT INTO FLOW STREAM. (SEE DETAIL)
5. LIFT HOLES ARE PERMITTED.
6. ALL PIPE HOLES SHALL BE PRECAST OR CORE – DRILLED.
7. A. FOR PVC PIPE ENTERING MANHOLE WITH PRECAST HOLES USE THE APPROVED. PRECASTED FLEXIBLE MANHOLE SLEEVE FOR THE APPROPRIATE PIPE DIAMETER AND DIMENSION RATIO. DOUBLE BANDING IS REQUIRED FOR FLEXIBLE MANHOLE SLEEVE.
   B. CONNECTION TO A MANHOLE WITH A CORE DRILLED HOLE SHALL BE MADE USING A 5" MIN. PVC C900 DR 18 AND THE APPROVED PVC-MANHOLE ADAPTER. THE ADAPTER SHALL NOT EXTEND MORE THAN 1"INTO THE MANHOLE.
   C. THE INSIDE AND OUTSIDE SPACE BETWEEN PIPE AND MANHOLE WALL SHALL BE FILLED WITH GROUT
8. INSIDE DROPS SHALL NOT BE DESIGNED TO EXCEED 1.80 FEET AND NOT CONSTRUCTED TO EXCEED 2.0 FEET, MAX. 6" INSIDE DROP IS PERMITTED FOR MANHOLES WITH 3 OR MORE INVERTS AND MANHOLES WITH A CHANGE IN FLOW DIRECTION OF MORE THAN 45 DEGREES.
9. 8" DIAMETER PIPE: 15" HOLE FOR PVC – 10" DIAMETER PIPE: 17" HOLE FOR PVC.
10. MANHOLE FABRICATION SHALL BE IN ACCORDANCE WITH ASTM C-478, LATEST STANDARD.
11. MINIMUM 5 FEET IS REQUIRED BETWEEN OUTSIDE OF MANHOLE AND A SERVICE WYE.
12. MANHOLES TO BE COATED INSIDE WITH AN APPROVED CORROSION BARRIER SYSTEM. SOLID THERMOPLASTIC CAST-IN LINER IS REQUIRED FOR LAST MANHOLE PRIOR TO LIFT STATION, MANHOLES DEEPER THAN 14 FT., MANHOLES WITH OUTSIDE DROP, AND MANHOLES WITH A FORCE MAIN CONNECTION. (SEE APPROPRIATE DETAILS)
13. APPROVED INFLOW PROTECTORS ARE REQUIRED.
14. MANHOLES IN ROADWAYS SHALL BE LOCATED OUTSIDE OF WHEEL PATHS.
15. SPECIAL PRE-APPROVED GROUT IS REQUIRED FOR PRECAST STRUCTURES WITH ANTIMICROBIAL ADMIXTURE.

STANDARD MANHOLE

*

13S

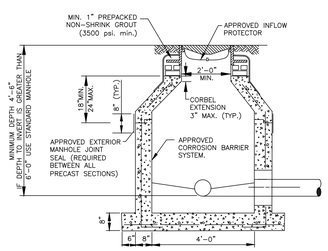


NOTE:

ALL STANDARD MANHOLE NOTES AND DETAILS ARE APPLICABLE.

SHALLOW MANHOLE

14S

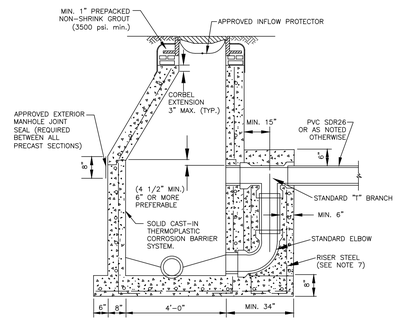


NOTES:

1. ALL DETAILS AND SPECIFICATIONS FOR STANDARD MANHOLES ARE APPLICABLE EXCEPT FOR REFERENCES TO DROP ASSEMBLY AND CAST IN LINERS.
2. THE PRECAST BASE SHALL EXTEND FULLY UNDER THE DROP ASSEMBLY.
3. MASONRY CONSTRUCTION ABOVE THE EXTENDED PRECAST BASE, IF FILLED WITH CONCRETE, IS PERMISSIBLE.
4. BRICK AND CONCRETE RUBBLE ARE PERMITTED AS FILLER IN DROP ENCASEMENT.
5. DROP CONNECTIONS SHALL BE REQUIRED WHENEVER AN INFLUENT INVERT IS LOCATED 2.0 FEET OR MORE ABOVE THE MAIN INVERT CHANNEL. DROP CONNECTIONS SHOULD NOT BE DESIGNED FOR LESS THAN A 2.4 FOOT DROP.
6. PVC SDR 26 PIPE WITH PVC SDR 35 FITTINGS SHALL BE UTILIZED IN THE DROP ASSEMBLY.
7. RISER STEEL TO BE CAST IN PLACE WITH BASE (4 RODS) OR USE 4 – 1/2" DIA. COIL LOOP INSERTS CAST IN PLACE WITH BASE (TO BE USED WITH 1/2" COIL RODS). COIL LOOP INSERTS TO BE "DAYTON SUPERIOR" B16, 1/2"X 4" OR APPROVED EQUAL.

DROP CONNECTION PRECAST MANHOLE

15S

GENERAL NOTES

DEFINITIONS

1. DEPARTMENT – THE PALM BEACH COUNTY WATER UTILITIES DEPARTMENT.
2. CONTRACTOR – UTILITY CONTRACTOR AND ALL UTILITY SUBCONTRACTORS.
3. ENGINEER – ENGINEER RESPONSIBLE FOR INSPECTION AND CERTIFICATION.

PROCEDURE

1. A PRE-CONSTRUCTION MEETING IS TO BE HELD PRIOR TO DELIVERY OF MATERIALS AND INITIATION OF ANY POTABLE WATER, RECLAIMED WATER AND/OR WASTEWATER SYSTEM CONSTRUCTION. THE MEETING SHALL BE ATTENDED BY THE DEPARTMENT, CONTRACTOR, ENGINEER AND OTHER INTERESTED PARTIES.
2. ANY REVISIONS TO THE APPROVED PLANS SHALL BE CALLED TO THE ATTENTION OF THE DEPARTMENT PRIOR TO THE PRE-CONSTRUCTION MEETING. REVISED PLANS MUST BE APPROVED PRIOR TO THE MEETING.
3. FIVE (5) COPIES OF THE CURRENT APPROVED MATERIAL LIST AND ALL NECESSARY SHOP DRAWINGS SHALL BE SUBMITTED FOR APPROVAL PRIOR TO SCHEDULING OF THE PRE-CONSTRUCTION MEETING.
4. ALL APPLICABLE PERMITS MUST BE OBTAINED PRIOR TO PRECONSTRUCTION MEETING. (DOT, HEALTH DEPARTMENT, COUNTY ENGINEER, ETC.).
5. THE CONTRACTOR SHALL MAINTAIN A CURRENT APPROVED SET OF CONSTRUCTION PLANS ON JOB SITE.
6. ALL MATERIALS SUPPLIED SHALL CONFORM TO PRODUCT LIST AND SHOP DRAWINGS AS APPROVED PRIOR TO CONSTRUCTION. SUBSTITUTE MATERIALS SHALL NOT BE APPROVED AFTER DELIVERY TO THE JOB SITE. ALL REQUESTS FOR MATERIAL SUBSTITUTION SHALL BE APPROVED PRIOR TO DELIVERY OF THESE MATERIALS TO THE JOB SITE.
7. THE LOCATIONS OF EXISTING UTILITIES SHOWN ON THE APPROVED PLANS ARE TO BE VERIFIED IN THE FIELD BY THE CONTRACTOR. APPROVAL OF DEVELOPMENT PLANS BY THE DEPARTMENT IN NO WAY IMPLIES VERIFICATION OF THE ACCURACY OF THOSE PLANS OR FEATURES DEPICTED THEREON. ANY DISCREPANCY IN OR VARIATION FROM THE APPROVED PLANS IS TO BE BROUGHT TO THE ATTENTION OF THE DEPARTMENT BY THE ENGINEER AND CONTRACTOR. THE CONTRACTOR SHALL CONFIRM AND INSTALL (IF NECESSARY) ADEQUATE MECHANICAL PIPE / JOINT RESTRAINT ON EXISTING PIPES PRIOR TO CONNECTION.
8. THE CONTRACTOR SHALL BE RESPONSIBLE AT ALL TIMES THROUGHOUT THE DURATION OF CONSTRUCTION FOR THE PROTECTION OF EXISTING AND NEWLY INSTALLED UTILITIES FROM DAMAGE OR DISRUPTION OF SERVICE. THE CONTRACTOR SHALL BE RESPONSIBLE FOR TAKING SUCH MEASURES AS NECESSARY TO PROTECT THE HEALTH, SAFETY AND WELFARE OF THOSE PERSONS HAVING ACCESS TO THE WORK SITE.
9. THE CONTRACTOR SHALL BE RESPONSIBLE FOR OBTAINING LOCATIONS FROM ALL OTHER UTILITY FACILITIES.
10. THE CONTRACTOR OR ENGINEER SHALL SCHEDULE INSPECTIONS AND TESTS A MINIMUM OF 24-48 HOURS IN ADVANCE.
11. NO CONNECTION TO OR ANY OTHER CONSTRUCTION SHALL BE PERFORMED ON AN EXISTING DEPARTMENT OWNED OR MAINTAINED MAIN OR STRUCTURE WITHOUT THE PRESENCE OF A DEPARTMENT INSPECTOR.
12. FACILITIES PROPOSED HEREIN SHALL BE CONSTRUCTED IN ACCORDANCE WITH THE APPROVED PLANS AND THE DEPARTMENT'S MINIMUM STANDARDS. CONFLICTS BETWEEN THE PRECEDING DOCUMENTS SHOULD BE CALLED TO THE ATTENTION OF THE DEPARTMENT FOR RESOLUTION. DEVIATIONS FROM THE APPROVED PLANS MUST BE APPROVED IN ADVANCE BY THE DEPARTMENT.
13. UPON COMPLETION OF CONSTRUCTION, A FINAL INSPECTION SHALL VERIFY PROPER ADHERENCE TO ALL FACETS OF THE PLANS AND SPECIFICATIONS.

PRESSURE PIPE NOTES

1. THERE SHALL BE 36" MINIMUM COVER FROM FINISHED GRADE TO TOP OF PIPE.
2. DUCTILE IRON PIPE (DIP) THICKNESS SHALL CONFORM TO THE DEPARTMENT'S APPROVED MATERIAL LIST. POTABLE WATER AND RECLAIMED WATER MAINS DIP SHALL BE CEMENT LINED. FORCE MAIN DIP SHALL BE CERAMIC EPOXY LINED.
3. PVC PRESSURE PIPE SHALL BE C-900, SDR-18, 150 PSI.
4. ALL FITTINGS SHALL BE DUCTILE IRON WITH MECHANICAL JOINTS AND CEMENT OR APPROVED EPOXY LINING.
5. POTABLE WATER, RECLAIMED WATER AND WASTEWATER FORCE MAIN VALVES 10 INCHES AND SMALLER SHALL BE RESILIENT SEAT GATE VALVES. TWELVE-INCH (12") OR LARGER FORCE MAIN VALVES SHALL BE RESILIENT SEAT GATE VALVES OR ECCENTRIC PLUG VALVES (IF APPROVED IN ADVANCE BY DEPARTMENT). POTABLE WATER AND RECLAIMED WATER MAIN VALVES LARGER THAN 10 INCHES SHALL BE BUTTERFLY VALVES.
6. ALL TRENCHING, PIPE-LAYING, BACKFILL, PRESSURE TESTING, AND DISINFECTION MUST COMPLY WITH ALL APPLICABLE FEDERAL, STATE, COUNTY AND HEALTH DEPARTMENT STANDARDS AND REGULATIONS.

GRAVITY SEWER NOTES

1. MANHOLES AND OTHER CASTINGS SHALL BE INSPECTED BY THE DEPARTMENT BEFORE PLACEMENT AND BEFORE APPLICATION OF THE CORROSION BARRIER SYSTEM (IF APPLICABLE).
2. ALL OPENINGS IN PRECAST MANHOLES SHALL BE CAST AT TIME OF MANUFACTURE OR CORED IN FIELD.
3. ALL MANHOLES SHALL BE SET PLUMB TO LINE AND GRADE, AND SHALL REST ON A FIRM, CAREFULLY GRADED SUBGRADE, WHICH SHALL PROVIDE UNIFORM BEARING UNDER BASE.
4. PVC WASTEWATER GRAVITY PIPE SHALL CONFORM TO ASTM D-3034, SDR 26 WITH PVC SDR 35 FITTINGS, OR PVC C-900 SDR 18, PIPE AND FITTINGS, WITH PUSH-ON RUBBER GASKET JOINTS.
5. D.I.P GRAVITY SEWER PIPE SHALL BE PRESSURE CLASS 350, EPOXY LINED.
6. THE COMPLETED GRAVITY WASTEWATER SYSTEM SHALL BE INSPECTED BY THE DEPARTMENT TO VERIFY ALIGNMENT AND INTEGRITY. THERE SHALL BE NO LEAKAGE. ALL MAINS SHALL BE LAMPED, SHOWING A FULL CIRCLE OF LIGHT. DURING THESE INSPECTIONS, THE MAIN SHALL BE CLEAN AND DRY.

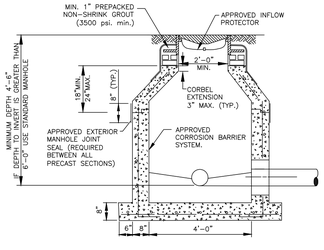


NOTE:

ALL STANDARD MANHOLE NOTES AND DETAILS ARE APPLICABLE.

SHALLOW MANHOLE

14S

WASTEWATER #2
STANDARD DETAILS

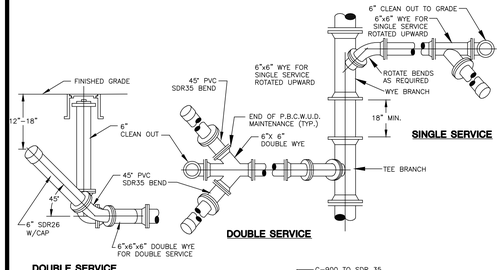


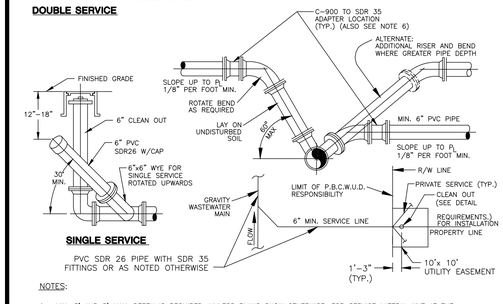


NOTES:

1. MIN. 3' AND 5' MAX. DEPTH IS REQUIRED, UNLESS PLANS SHOW OTHERWISE, FOR SERVICE LATERAL WYE AT THE CLEAN OUT ENDING P.B.C.W.U.D. OWNERSHIP AND MAINTENANCE RESPONSIBILITY.
2. CLEAN OUT IS TO BE INSTALLED PER DEPARTMENT STANDARDS PRIOR TO WATER METER INSTALLATION.
3. WASTEWATER MAIN WYE BRANCH TO MATCH MAIN PIPE MATERIAL.
4. CLEAN OUTS DESIGNATING THE END OF THE DEPARTMENT'S MAINTENANCE RESPONSIBILITY SHALL BE LOCATED WITHIN AN UTILITY EASEMENT OR RIGHT-OF WAY DEDICATED FOR UTILITIES.
5. THE DEVELOPER/PROPERTY OWNER OR ASSIGNEE SHALL BE RESPONSIBLE FOR CLEAN OUT INSTALLATION PRIOR TO WATER METER INSTALLATION AS SPECIFIED BY THE DEPARTMENT.
6. SEE MINIMUM SEPARATION STATEMENT FOR P.V.C. C-900 SDR 18 PIPE MATERIAL REQUIREMENTS AT WASTEWATER LATERAL/POTABLE WATER MAIN CROSSINGS.
7. ALONG STREETS WITH ADJACENT NON-EXCLUSIVE UTILITY EASEMENT, THE CLEANOUT ENDING PBCWUD MAINTENANCE RESPONSIBILITY SHALL BE INSTALLED 1'-3" INTO THE UTILITY EASEMENT.
8. MIN. 3' HORIZONTAL SEPARATION MUST BE MAINTAINED BETWEEN CLEANOUTS AND EDGE OF PAVEMENT, BACK OF CURB, EDGE OF DRIVEWAY, LIGHTPOLES, TRANSFORMERS, POWER POLES.

TYPICAL WASTEWATER SERVICE CONNECTION

12S

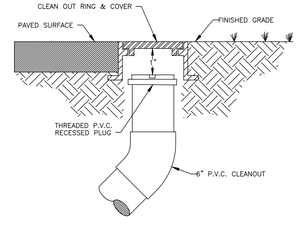


NOTES:

1. CLEANOUTS TO BE LOCATED IN GRASS AREA WHENEVER POSSIBLE, MIN. 3' FROM EDGE OF PAVEMENT, BACK OF CURB, EDGE OF DRIVEWAY, LIGHT POLES, TRANSFORMERS, OR POWER POLES.
2. CLEANOUTS SHALL NOT BE INSTALLED IN TRAFFIC LANES OR AREAS UNDER HEAVY TRAFFIC LOADS.
3. THE COVER TO BE MARKED "S".
4. CLEANOUTS TO BE INSTALLED PRIOR TO WATER METER RELEASE.
5. THE DEVELOPER/PROPERTY OWNER OR ASSIGNEE SHALL BE RESPONSIBLE FOR CLEANOUT INSTALLATION PRIOR TO WATER METER INSTALLATION AS SPECIFIED BY THE DEPARTMENT.
6. A CONCRETE COLLAR MAY BE REQUIRED IF CLEANOUT IS LOCATED BETWEEN DRIVEWAYS. A SPECIAL CONSTRUCTION DETAIL WILL BE REQUIRED.
7. ALONG STREETS WITH ADJACENT NON-EXCLUSIVE UTILITY EASEMENTS, THE CLEANOUTS ENDING PBCWUD MAINTENANCE RESPONSIBILITY SHALL BE INSTALLED MIN. 12", MAX. 18" INTO THE EASEMENT.

TYPICAL CLEANOUT INSTALLATION

11S

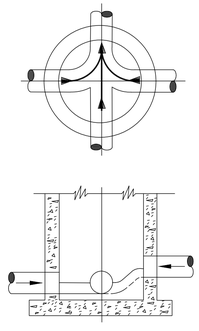

NOTES:

1. PROPERLY SHAPED INVERT CHANNELS AND SPILLWAYS SHALL BE CONSTRUCTED BETWEEN PIPES WITH DIFFERENT INVERT ELEVATIONS TO PROVIDE FOR SMOOTH FLOWS.
2. SERVICE LATERALS SHALL NOT ENTER MANHOLES UNLESS SPECIFIED ON PLANS AND THEN MUST BE TREATED AS MAINS (ELEVATIONS SHOWN, PRECAST HOLE, FLOW CHANNEL)
3. APPROVED PRECAST POLYPROPYLENE OR FIBER REINFORCED POLYMER (FRP) FLOW CHANNELS WITH INTEGRATED PIPE INVERTS (SEE SEPARATE DETAILS), PRECAST CONCRETE FLOW CHANNELS, OR FIELD INSTALLED CONCRETE FLOW CHANNELS ARE REQUIRED.
4. SIDEWALLS OF FLOW CHANNELS SHALL BE AT LEAST HALF OF PIPE HEIGHT AT ALL POINTS.
5. NO INSIDE DROP LARGER THAN 6" SHALL BE ALLOWED WITH 3 OR 4 INVERTS AND MANHOLES WITH A CHANGE OF DIRECTION OF FLOW OF MORE THAN 45 DEGREES.
6. THE FIELD APPLIED CORROSION BARRIER SYSTEM SHALL BE INSTALLED AFTER INVERT CHANNEL CONSTRUCTION UNLESS PRECAST THERMOPLASTIC BASELINER IS USED. THE FIELD APPLIED CORROSION BARRIER MAY NOT BE APPLIED TO THE FLOW CHANNEL.

INVERT FLOW CHANNELS

16S

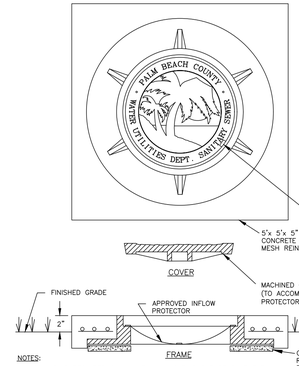


NOTES:

1. COLLAR IS REQUIRED ONLY WHEN MANHOLE IS OUT OF PAVEMENT.
2. STANDARD FRAME AND COVER SIZE SHALL BE SEVEN INCHES (7"). A 4" FRAME MAY ONLY BE USED WITH PRIOR APPROVAL.
3. A STEEL MANHOLE RISER, APPROVED PRECAST CONCRETE ADJUSTING RINGS OR ADDITIONAL BRICKS MAY BE USED TO ELEVATE EXISTING MANHOLE COVERS TO RESURFACED GRADE (MAX. 4" HEIGHT).
4. COVER SHALL FIT FLUSH WITH THE FRAME WITH THE INFLOW PROTECTOR INSTALLED.

GRAVITY SEWER MANHOLE FRAME & COVER

17S

CONSULTANT:
Kimley»Horn

IT'S THE LAW ! CALL 48 HOURS BEFORE YOU DIG 1-800-432-4770 SUNSHINE STATE ONE CALL OF FLORIDA, INC. UTILITIES NOTIFICATION CENTER

DESIGNED BY: WUD
DRAWN BY: WUD CADD
CHECKED BY: A. GALICKI
APPROVED BY: WUD

MICHAEL D. SPRUCE, P.E.
52776

Palm Beach County
Water Utilities Department
P.O.Box 16097
West Palm Beach, FL 33416-6097

PROJECT NO.
149658011

FONTANA TOWNHOMES
PREPARED FOR
MERITAGE HOMES

PALM BEACH COUNTY FLORIDA

PALM BEACH COUNTY
WATER UTILITIES DEPARTMENT
P.O. BOX 16097
WEST PALM BEACH, FL 33416
(561)493-6000

| NO. | DATE | REVISION / REMARKS | BY |
|---|---|---|---|
| 1 | JUNE 2019 | GENERAL REVISION | J.L. |
| 2 | 04/02/20 | FINAL PERMIT/CONST. PLANS | |

STD DETAILS

SHEET NUMBER 2 OF 5

SEAL

Jan 15, 2021

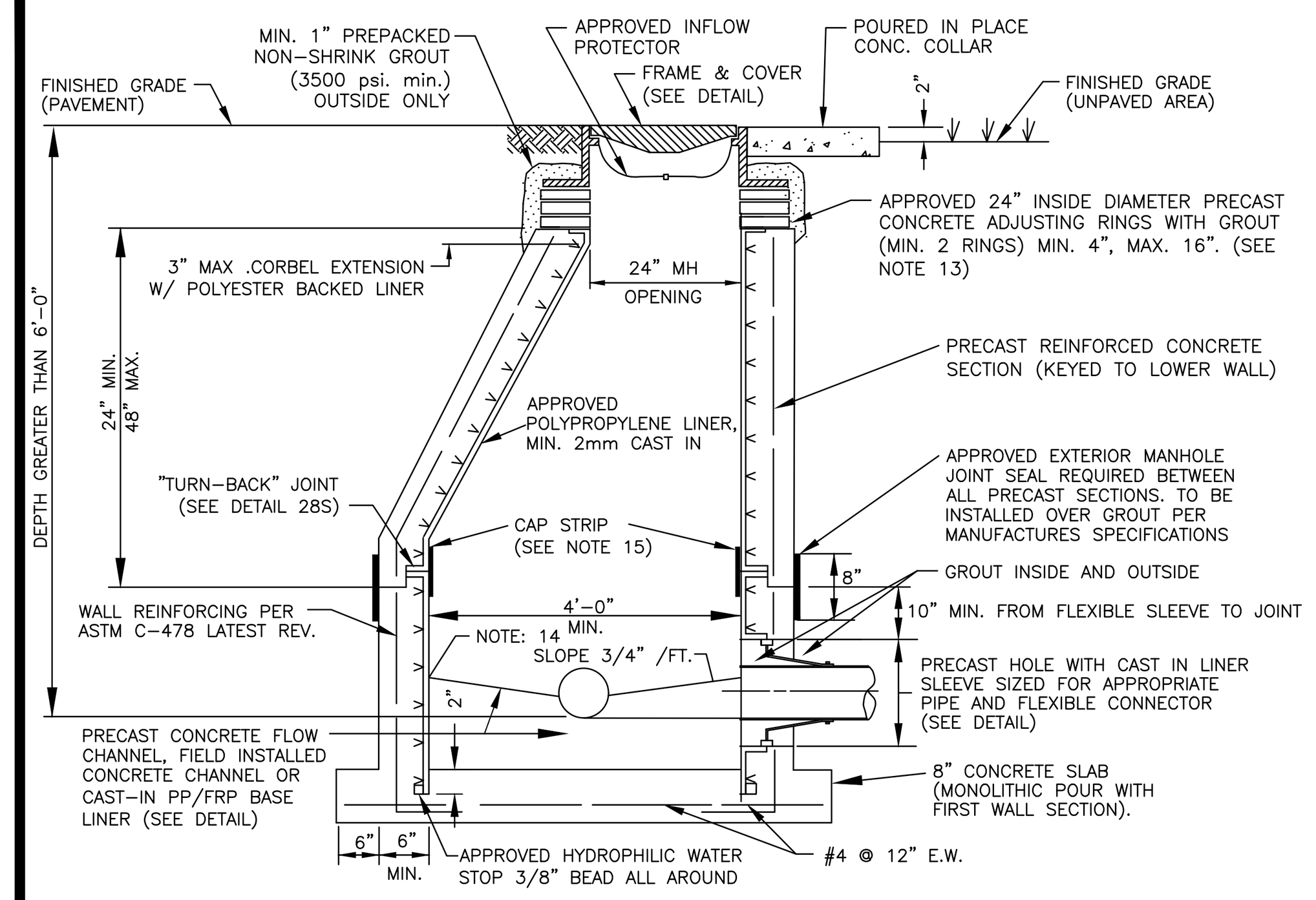


NOTES:
1. PRECAST CONCRETE TYPE II 4000 P.S.I. CALCAREOUS AGGREGATE REQUIRED (MIN. CaCO3 CONTENT: 65% IN LARGE AGGREGATE, 50% IN CONCRETE SCREENING).
2. APPROVED PRIMER AND SEALANT GASKET AT ALL RISER JOINTS. SEALANT GASKET SIZE AND PLACEMENT SHALL BE CALLED OUT ON SHOP DRAWINGS. PRIMER TO BE APPLIED BY THE PRECASTER (TONGUE SECTION ONLY).
3. ALL PIPE OPENINGS SHALL BE GAS TIGHT AND WATER TIGHT WITH NO EXPOSED CONCRETE SURFACES.
4. CAST OPENINGS SHALL BE MANUFACTURED WITH A POLYPROPYLENE SLEEVE CAST IN. APPROVED FLEXIBLE MANHOLE CONNECTORS SHALL BE USED AT PIPE CONNECTIONS. HOLE SIZE PER BOOT MANUFACTURER'S SPECIFICATIONS. DOUBLE PIPE CLAMPS MUST BE INSTALLED ON FLEXIBLE SLEEVES WHERE REQUIRED BY BOOT MANUFACTURERS INSTALLATION INSTRUCTIONS.
5. CORED PIPE OPENINGS SHALL BE INSTALLED PER DETAIL. APPROVED FLEXIBLE CONNECTOR WILL BE INSTALLED ONTO POLY-PROPYLENE WALL SLEEVE. WALL SLEEVE SHALL BE EPOXIED INTO CORED OPENING AND THERMAL WELDED TO WALL LINER.
6. FLOW CHANNELS SHALL BE CONSTRUCTED TO DIRECT INFLUENT INTO FLOW STREAM. APPROVED CAST-IN PP/FRP BASE LINER IS ACCEPTABLE (SEE DETAIL).
7. LIFT HOLES ARE PERMITTED.
8. INSIDE DROPS SHALL NOT BE DESIGNED TO EXCEED 1.80 FEET AND NOT CONSTRUCTED TO EXCEED 2.0 FEET. MAX. 6" INSIDE DROP IS PERMITTED FOR MANHOLES WITH 3 OR MORE INVERTS AND MANHOLES WITH A CHANGE IN FLOW DIRECTION OF MORE THAN 45 DEGREES.
9. MANHOLE FABRICATION SHALL BE IN ACCORDANCE WITH ASTM C-478, LATEST STANDARD.
10. MINIMUM 5 FEET IS REQUIRED BETWEEN OUTSIDE OF MANHOLE AND SERVICE WYE OR ANY PIPE JOINT.
11. ONLY APPROVED THERMOPLASTIC LINER SYSTEM SHALL BE USED. LINERS MUST BE WELDED BY LINER MFG CERTIFIED WELDERS AND BE CAST INTO THE MANHOLE BY A LINER MANUFACTURER CERTIFIED PRECASTER.
12. APPROVED INFLOW PROTECTORS ARE REQUIRED.
13. MAXIMUM HEIGHT OF CHIMNEY SHALL NOT EXCEED 24" (INCLUDING FRAME CASTING).
14. SEAL INVERT BENCH AND CHANNEL TO WALL LINER WITH 3M WEATHERBAN 5354 SEALANT TAPE OR APPROVED EQUAL.
15. MIN. 4" WIDE FIELD WELDED CAP STRIP IS REQUIRED FOR ALL JOINTS.
16. SOLID THERMOPLASTIC CAST-IN LINER IS REQUIRED FOR LAST MANHOLE PRIOR TO LIFT STATION. MANHOLES DEEPER THAN 14 FT., MANHOLES WITH OUTSIDE DROP, AND MANHOLES WITH A FORCE MAIN CONNECTION. (SEE APPROPRIATE DETAILS)
17. MANHOLES IN ROADWAYS SHALL BE LOCATED OUTSIDE OF WHEEL PATHS.

STANDARD MANHOLE WITH CAST-IN LINER 18S

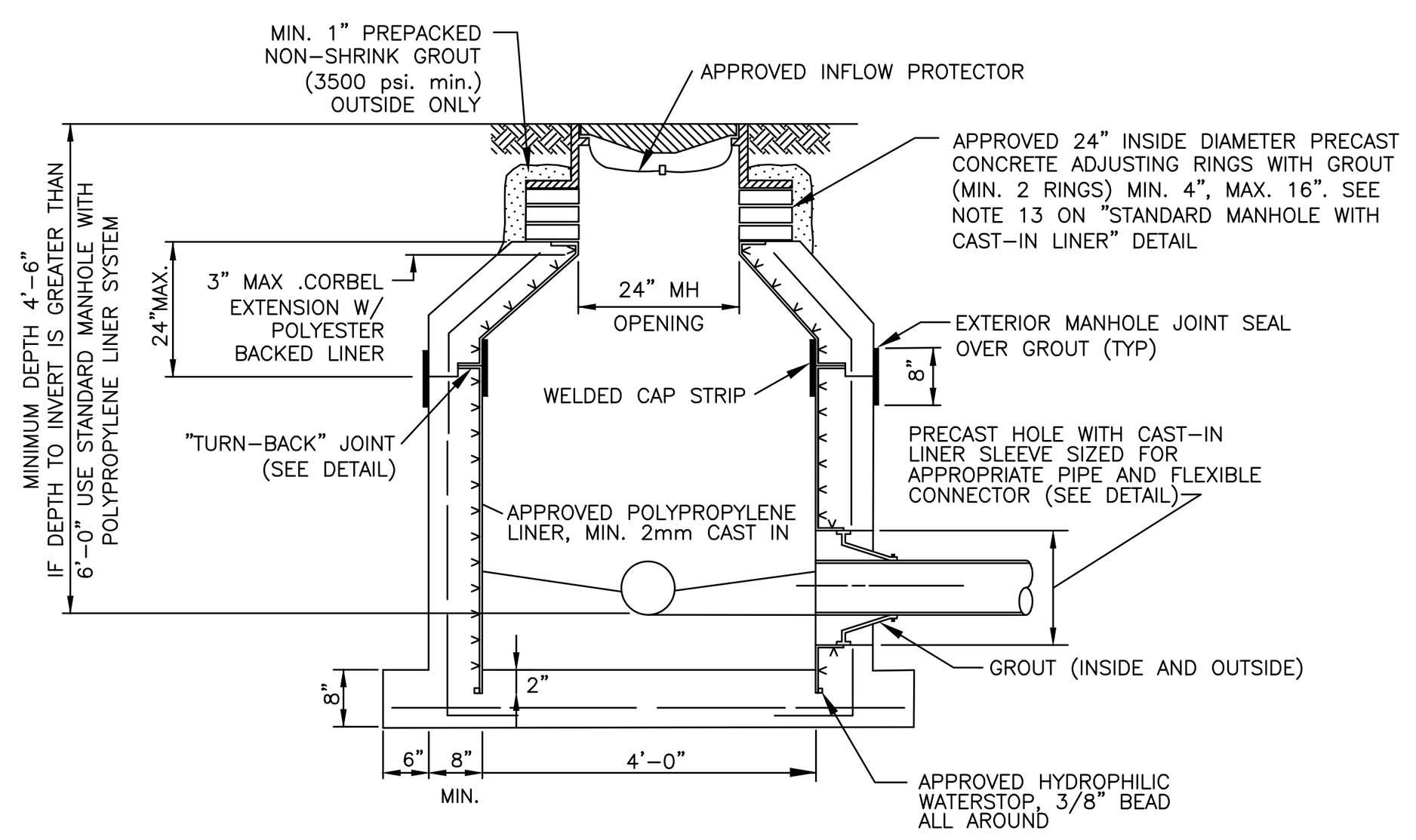


NOTES:
1. ALL "STANDARD MANHOLE WITH POLYPROPYLENE LINER SYSTEM" NOTES AND DETAILS ARE APPLICABLE.
2. SEAL INVERT BENCH AND CHANNEL TO WALL LINER WITH 3M WEATHERBAN 5354 SEALANT TAPE (OR APPROVED EQUAL).
3. SEE SEPARATE DETAIL FOR OPTIONAL CAST-IN POLYPROPYLENE OR FIBER REINFORCED POLYMER BASE LINER.

SHALLOW MANHOLE WITH CAST-IN LINER 19S

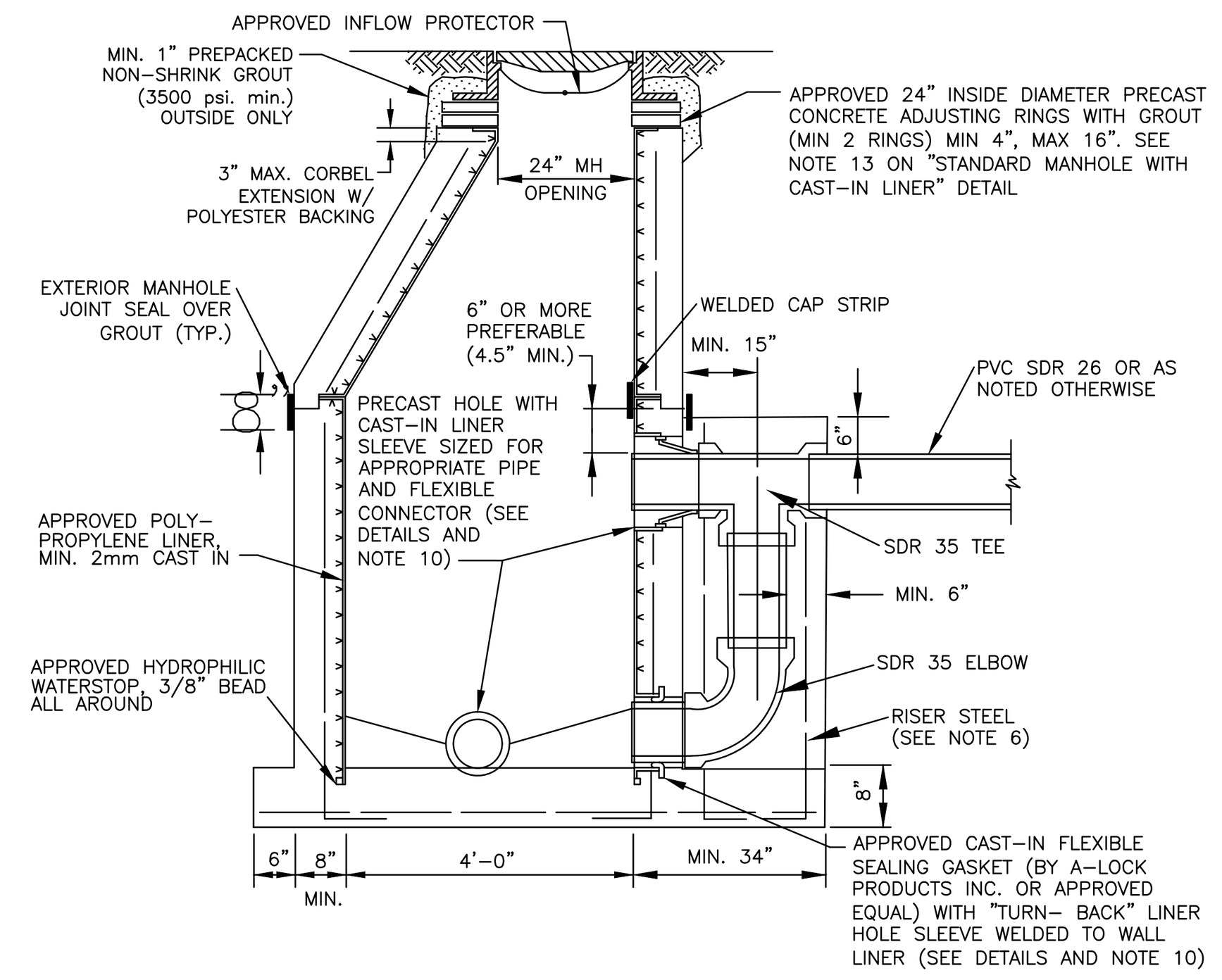


NOTES:
1. ALL DETAILS AND SPECIFICATIONS FOR "STANDARD MANHOLE WITH SOLID POLYPROPYLENE LINER SYSTEM" ARE APPLICABLE EXCEPT FOR REFERENCES TO DROP ASSEMBLY.
2. THE PRECAST BASE SHALL EXTEND FULLY UNDER THE DROP ASSEMBLY.
3. PRECAST DROP ENCASEMENT REQUIRED UP TO TOP EDGE OF 90 DEGREE ELBOW, BRICK AND CONCRETE RUBBLE ARE PERMITTED AS FILLER IN REMAINDER OF DROP ENCASEMENT.
4. DROP CONNECTIONS SHALL BE REQUIRED WHENEVER AN INFLUENT INVERT IS LOCATED 2.0 FEET OR MORE ABOVE THE MAIN INVERT CHANNEL. DROP CONNECTIONS SHOULD NOT BE DESIGNED FOR LESS THAN A 2.4 FOOT DROP.
5. PVC SDR 26 PIPE WITH PVC SDR 35 FITTINGS SHALL BE UTILIZED IN THE DROP ASSEMBLY.
6. DROP ENCASEMENT REINFORCING STEEL TO BE CAST IN PLACE WITH BASE (4 RODS) OR USE 4-1/2" DIA. COIL LOOP INSERTS CAST IN PLACE WITH BASE (TO BE USED WITH 1/2" COIL RODS). COIL LOOP INSERTS TO BE "DAYTON SUPERIOR" B16, 1/2"X 4" OR APPROVED EQUAL.
7. MIN. 4" WIDE FIELD WELDED CAP STRIP IS REQUIRED OVER ALL JOINTS.
8. SEAL INVERT BENCH AND CHANNEL TO WALL LINER WITH 3M WEATHERBAN 5354 SEALANT TAPE (OR APPROVED EQUAL).
9. SEE SEPARATE DETAIL FOR OPTIONAL CAST-IN POLYPROPYLENE OR FIBER REINFORCED POLYMER BASE LINER.

OUTSIDE DROP MANHOLE WITH CAST-IN LINER 20S

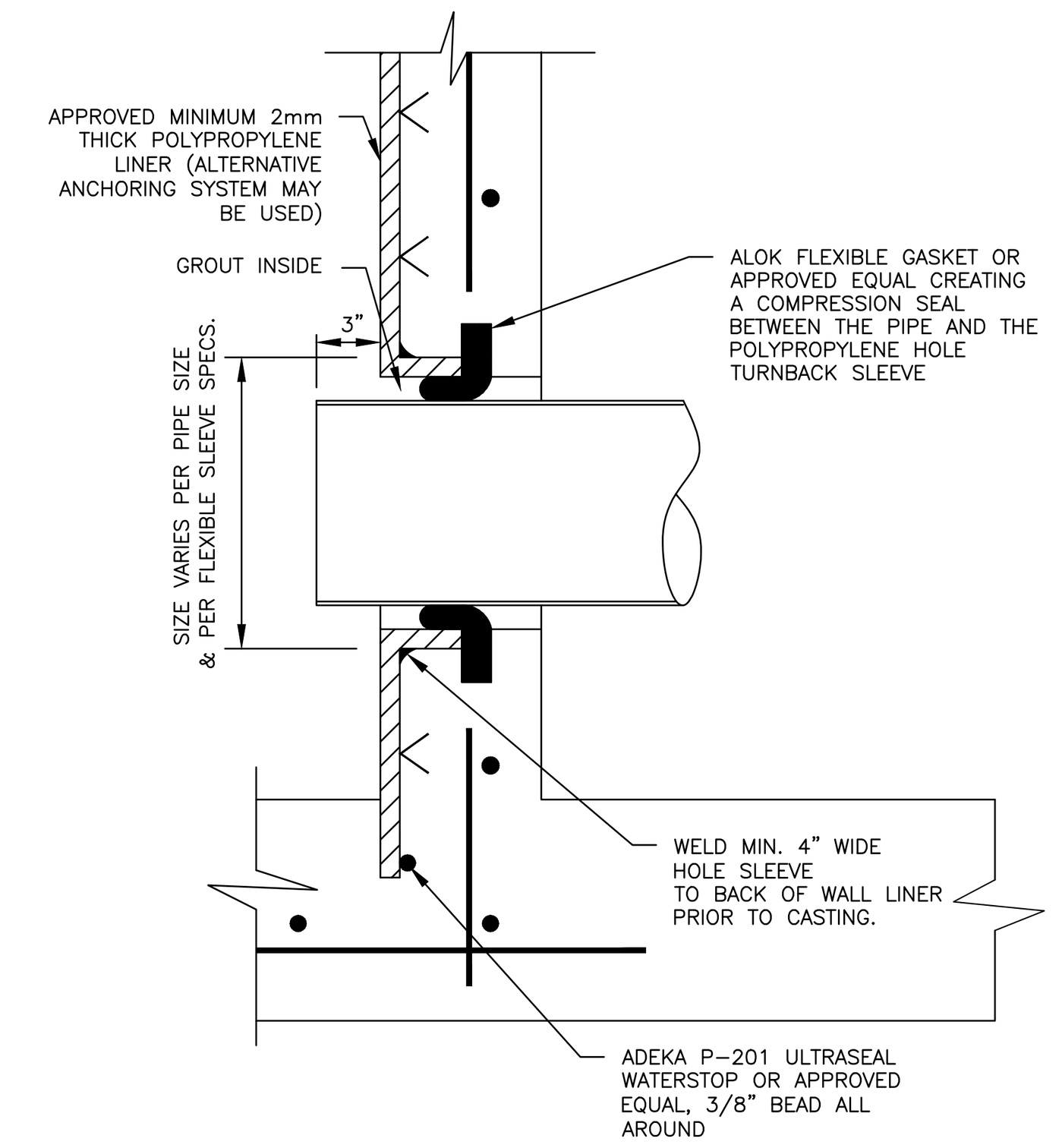


PIPE TO DROP MANHOLE CONNECTION LOWER INVERT 25S

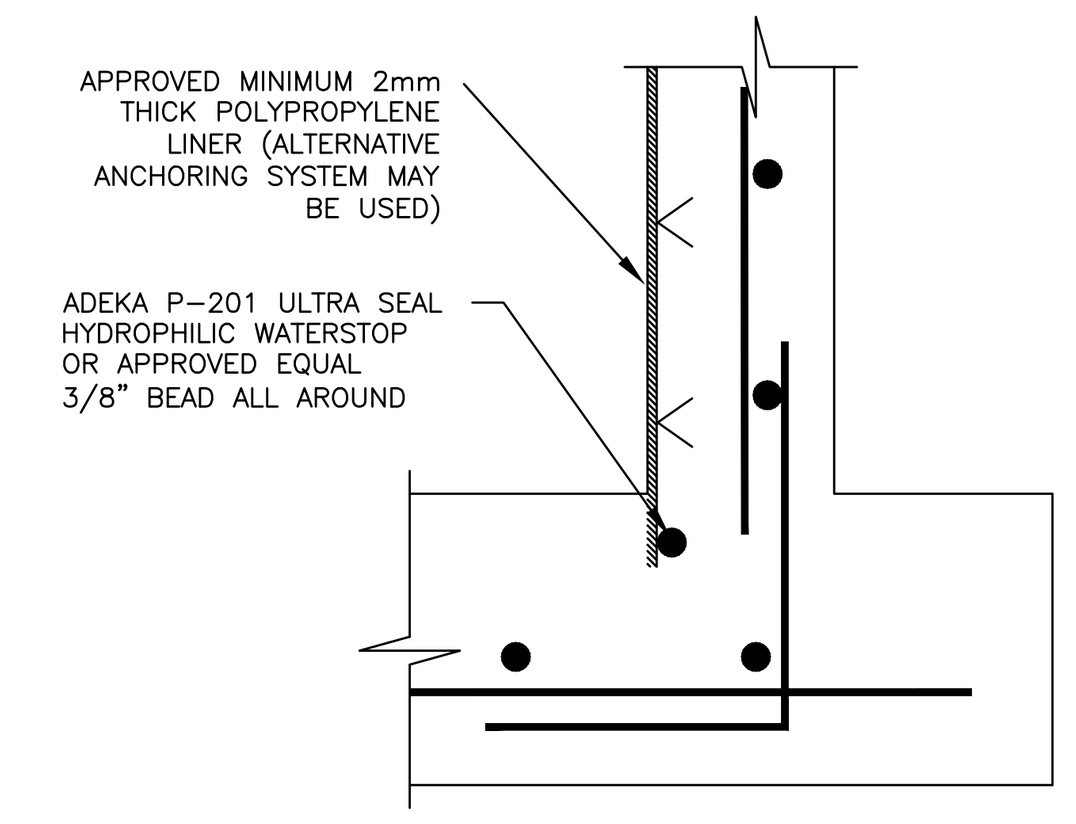


NOTE:
THIS STYLE WATERSTOP IS USED ON STRUCTURES CAST WITH A MONOLITHICALLY POURED BOTTOM SLAB.

BASE MANHOLE SECTION WATERSTOP DETAIL 26S

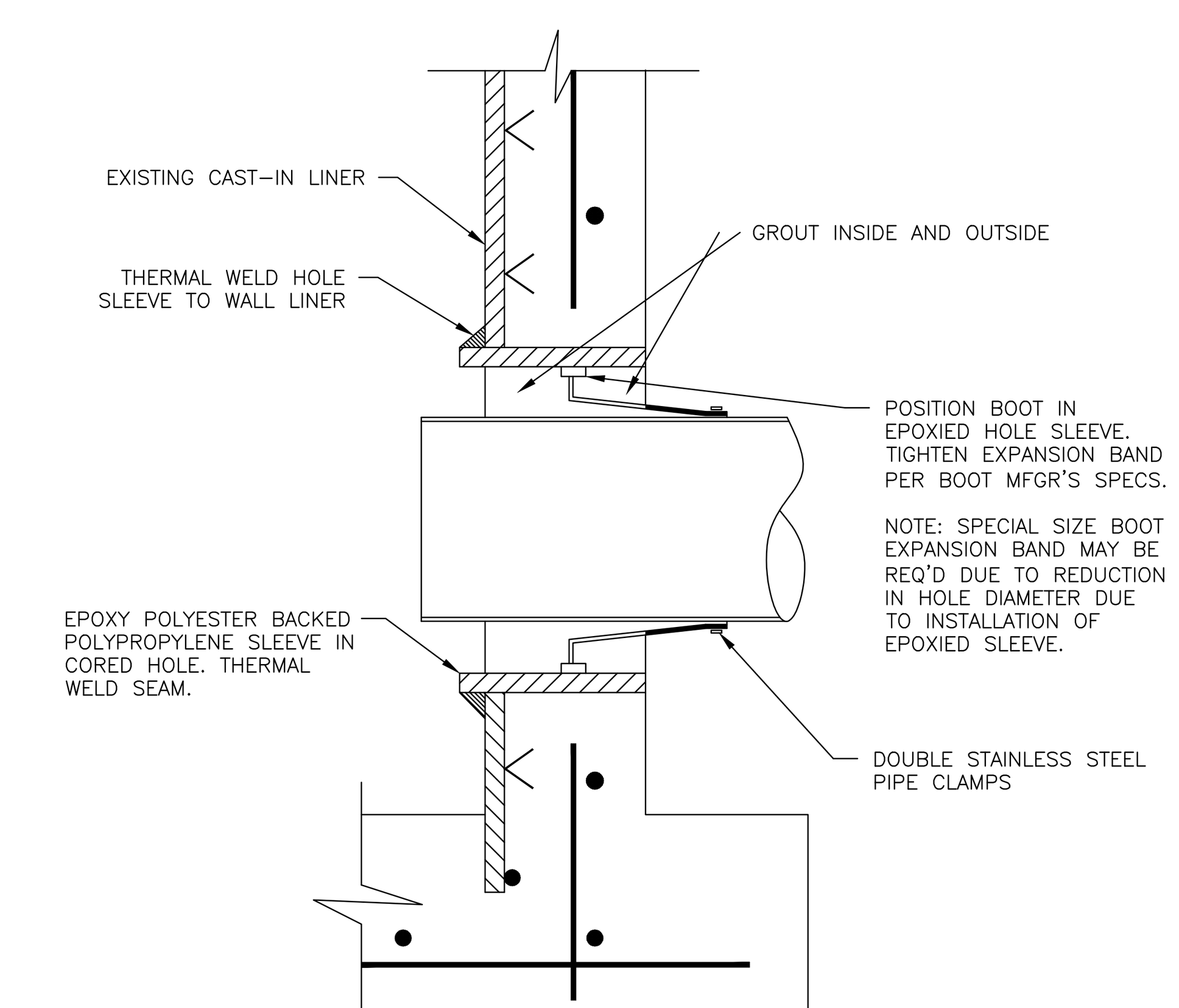


NOTE:
THERMAL WELDING AND EPOXY OF THE SLEEVE TO BE PERFORMED BY A CONTRACTOR CERTIFIED BY THE LINER MANUFACTURER

CORED HOLE W/FLEX. CONNECTOR & TURNBACK SLEEVE POLYPROPYLENE LINER SYSTEM CAST-IN 24S

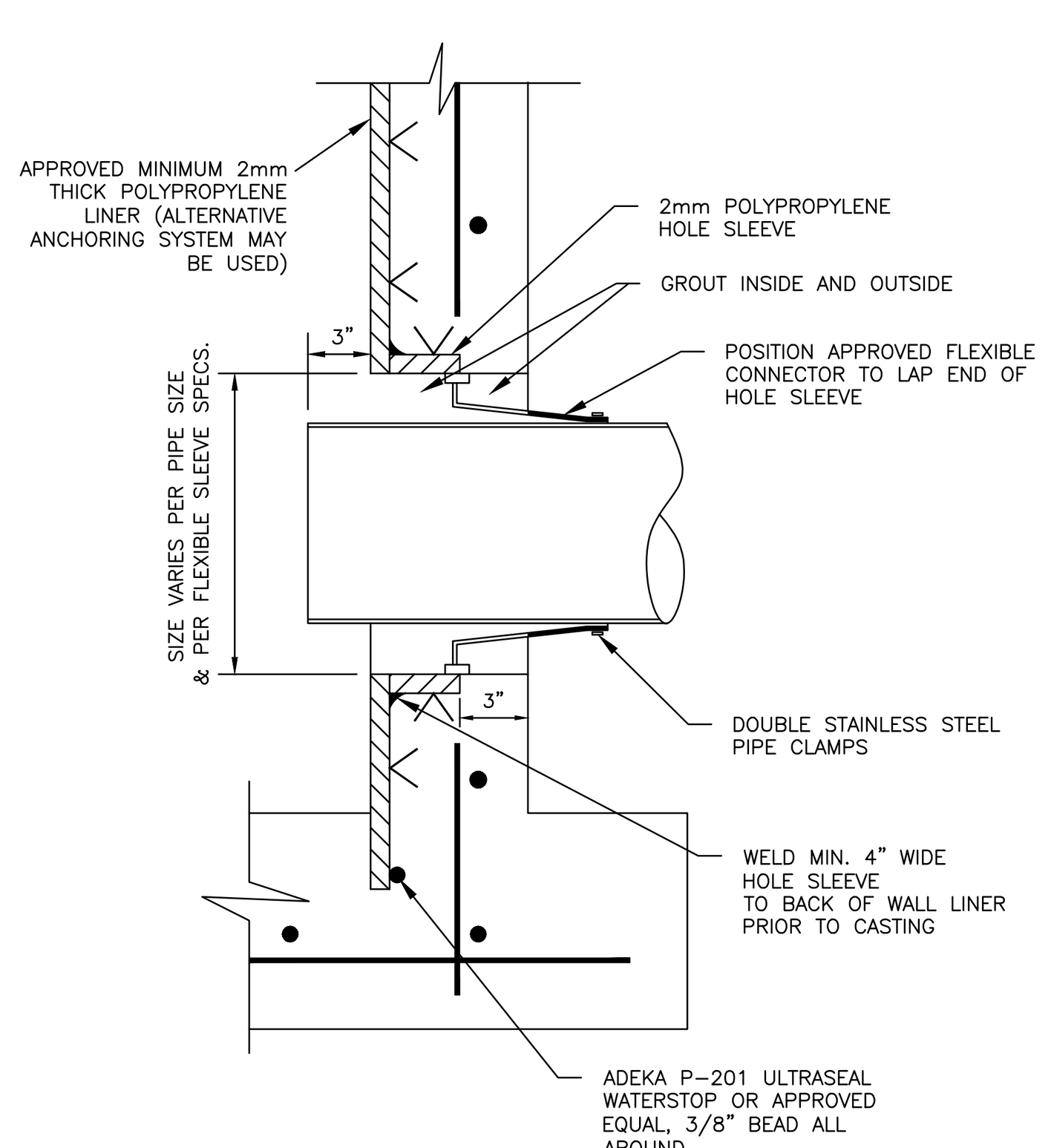


PIPE TO MANHOLE CONNECTION – TYPE "A" 21S

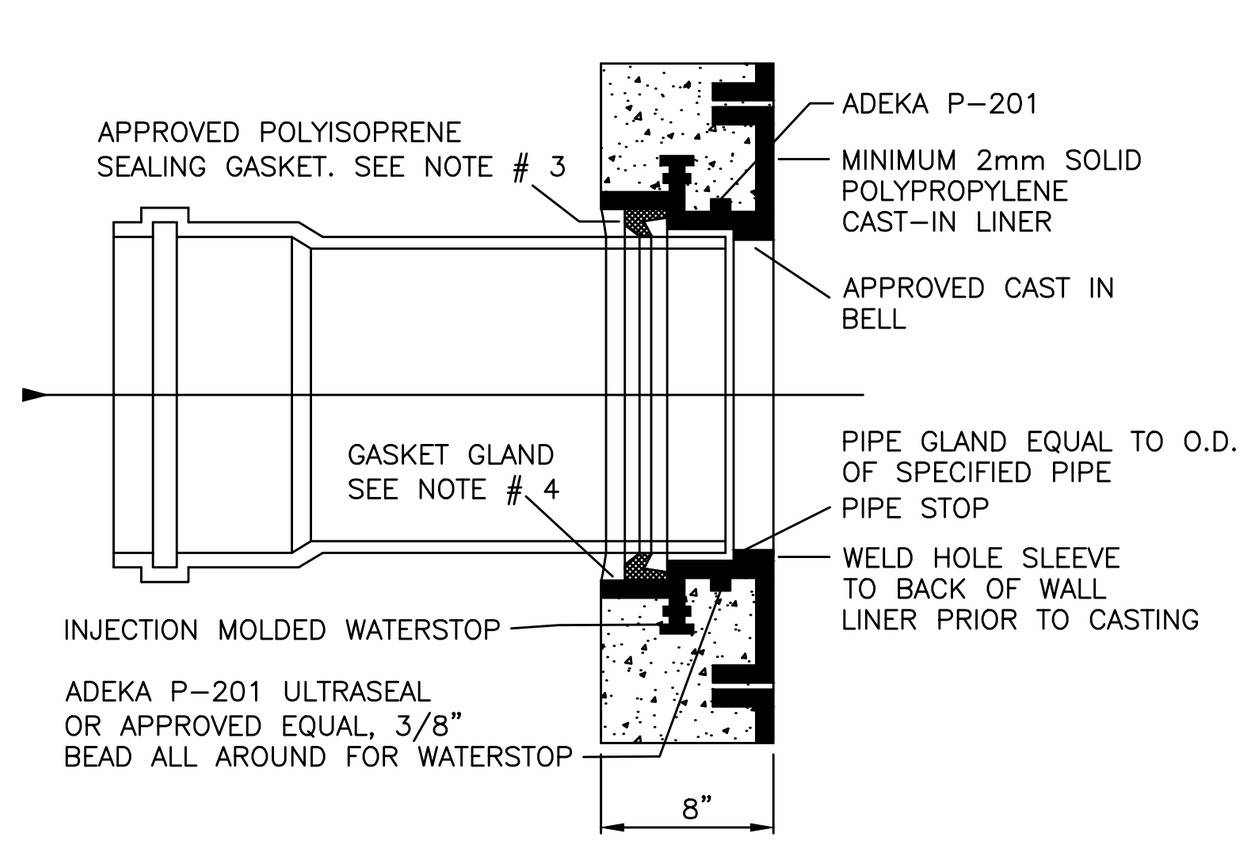


INSTALLATION:
1) CLEAN BELL
2) INSTALL GASKET AS SHOWN
3) LUBRICATE PIPE SPIGOT AND SLIDE INTO BELL AND GASKET UNTIL REACHING PIPESTOP
4) CHECK FOR WATERTIGHT CONNECTION

DO NOT LUBRICATE THE GASKET OR THE BELL

NOTES:
1) MANHOLE SHOP DRAWINGS SHALL IDENTIFY THE TYPE OF MANHOLE/PIPE CONNECTION.
2) MANHOLE SHOP DRAWINGS SHALL IDENTIFY THE PIPE SIZE, TYPE, GASKET TYPE, AND HOLE SIZE.
3) ONLY THE POLYISOPRENE GASKET SUPPLIED BY THE BELL MANUFACTURER SHALL BE USED IN COMPRESSION TYPE BELLS.
4) GASKET GLAND VARIES ACCORDING TO PIPE SIZE AND TYPE.
5) HOLE SLEEVES AND BELL CONNECTORS SHALL EXTEND TO THE OUTER PROFILE OF THE CONCRETE STRUCTURE AT MINIMUM PROVIDING A COMPLETELY LINED SURFACE WHERE THE GASKET AND HOLE LINER MATE TOGETHER.

CAST-IN BELL WITH COMPRESSION SEAL GASKET

PIPE TO MANHOLE CONNECTION – TYPE "B" 22S

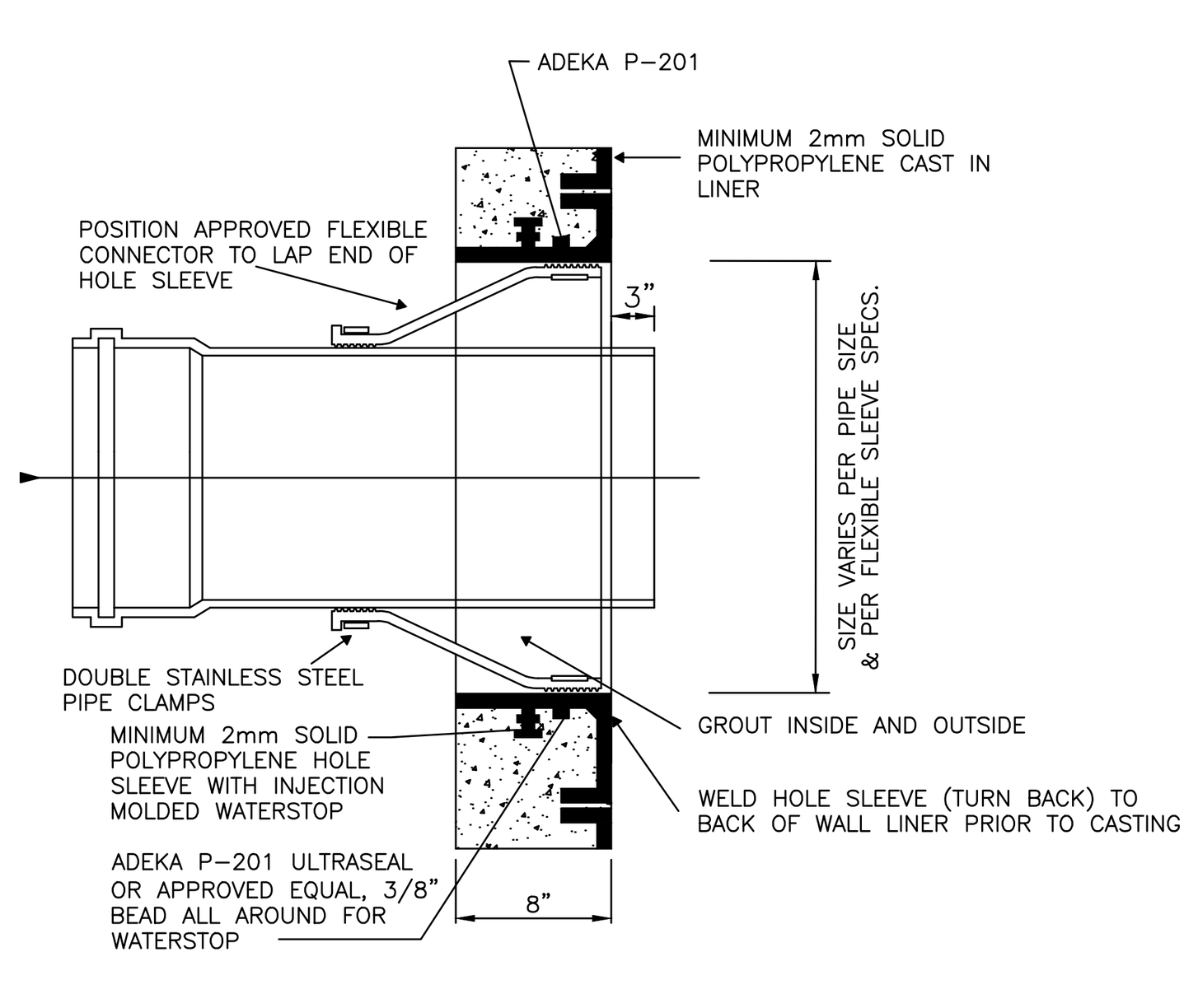


INSTALLATION:
1) CLEAN BOOT HUB
2) INSTALL RUBBER BOOT CONNECTOR (PER MANUFACTURER'S INSTRUCTIONS).
3) LUBRICATE PIPE SPIGOT AND SLIDE INTO RUBBER BOOT CONNECTOR.
4) TIGHTEN RUBBER BOOT CLAMPS (PER MANUFACTURER'S INSTRUCTIONS)
5) SECURE AND BACKFILL WITH PROPER MATERIAL AS SPECIFIED
6) CHECK FOR WATERTIGHT CONNECTION

DO NOT LUBRICATE THE BOOT CONNECTOR OR THE BOOT HUB

NOTES:
1) MANHOLE SHOP DRAWINGS SHALL IDENTIFY THE TYPE OF MANHOLE/PIPE CONNECTION.
2) MANHOLE SHOP DRAWINGS SHALL IDENTIFY THE PIPE SIZE, TYPE, GASKET TYPE, AND HOLE SIZE.
3) ONLY THE POLYISOPRENE GASKET SUPPLIED BY THE BELL MANUFACTURER SHALL BE USED IN COMPRESSION TYPE BELLS.
4) GASKET GLAND VARIES ACCORDING TO PIPE SIZE AND TYPE.
5) HOLE SLEEVES AND BELL CONNECTORS SHALL EXTEND TO THE OUTER PROFILE OF THE CONCRETE STRUCTURE AT MINIMUM PROVIDING A COMPLETELY LINED SURFACE WHERE THE GASKET AND HOLE LINER MATE TOGETHER.

TURN BACK BOOT HUB WITH BOOT CONNECTOR

PIPE TO MANHOLE CONNECTION – TYPE "C" 23S

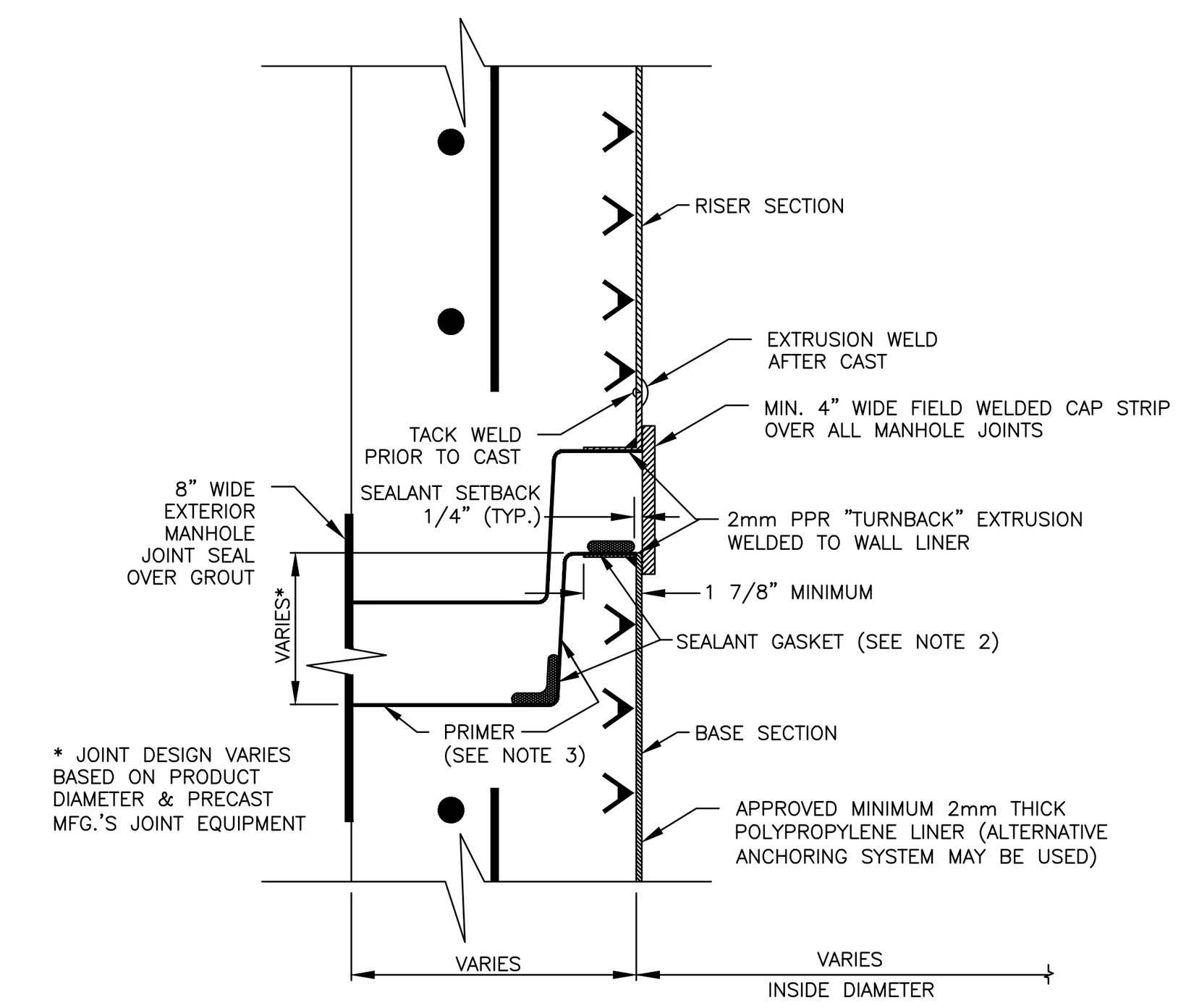


NOTES:
1. LINER WELDING SHALL BE PERFORMED EXCLUSIVELY BY LICENSED, CERTIFIED WELDERS.
2. STRUCTURE SHOP DRAWINGS SHALL CALL OUT THE SIZE, TYPE AND PLACEMENT OF THE JOINT SEALANT.
3. JOINT PRIMER TO BE APPLIED BY THE PRECASTER (TONGUE SECTION ONLY).

TURN BACK JOINT INSTALLED PRIOR TO CAST 27S

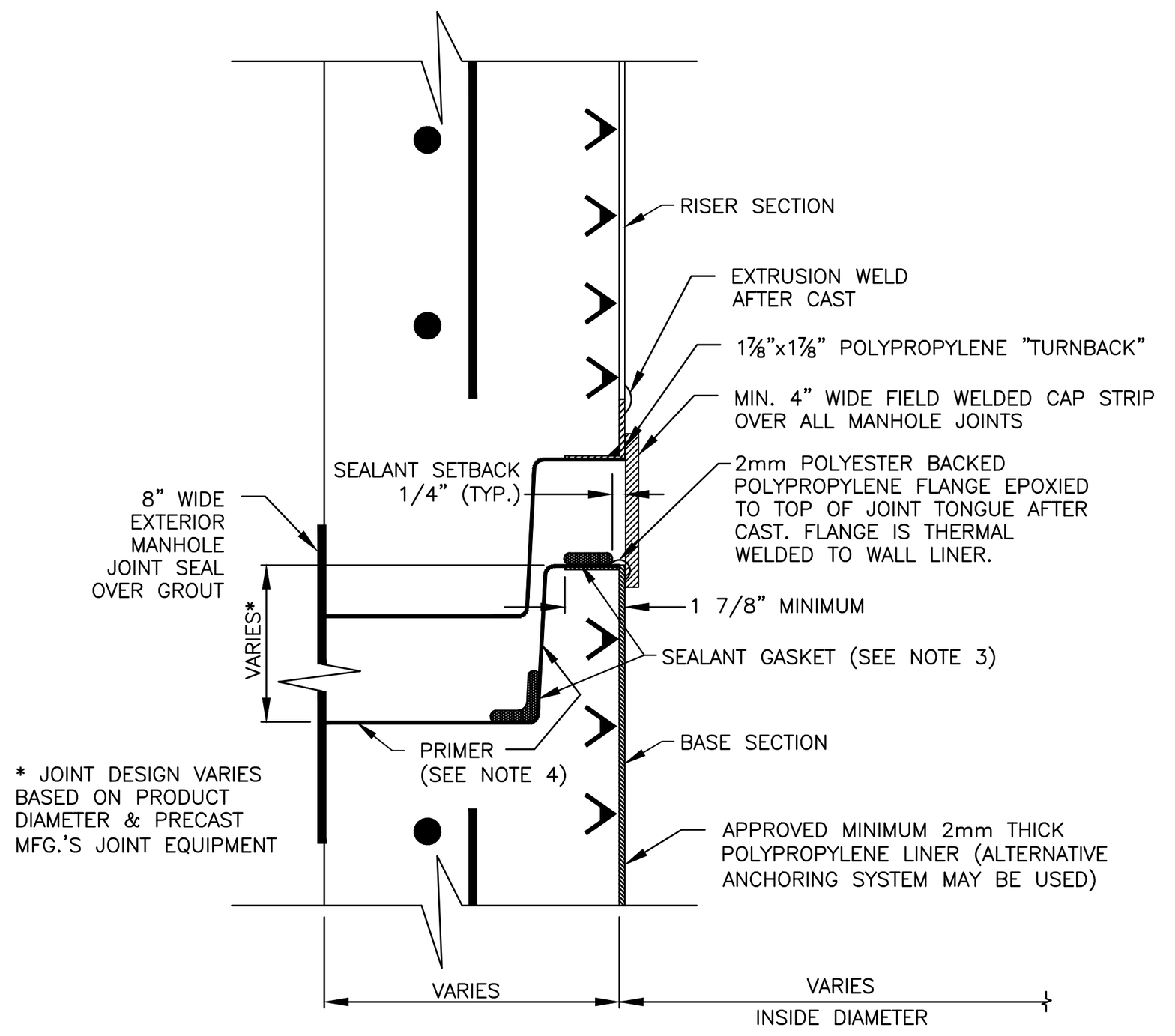


NOTES:
1. THE "AFTER CAST" "TURNBACK" JOINT IS USED WHEN THE "PRIOR TO CAST" "TURNBACK" JOINT IS NOT FEASIBLE.
2. LINER WELDING SHALL BE PERFORMED EXCLUSIVELY BY LICENSED, CERTIFIED WELDERS.
3. STRUCTURE SHOP DRAWINGS SHALL CALL OUT THE SIZE, TYPE AND PLACEMENT OF THE JOINT SEALANT.
4. JOINT PRIMER TO BE APPLIED BY THE PRECASTER (TONGUE SECTION ONLY).

TURN BACK JOINT INSTALLED AFTER CAST 28S

# WASTEWATER #3 STANDARD DETAILS

CONSULTANT:
Kimley»Horn
1615 S CONGRESS AVE, SUITE 201, DELRAY BEACH, FL 33445
PHONE: 561-330-2345 FAX: 561-330-2245
WWW.KIMLEY-HORN.COM CA 00000696

IT'S THE LAW !
CALL 48 HOURS BEFORE YOU DIG
1-800-432-4770
SUNSHINE STATE ONE CALL OF FLORIDA, INC.
UTILITIES NOTIFICATION CENTER

DESIGNED BY: WUD
DRAWN BY: WUD CADD
CHECKED BY: A. GALICKI
APPROVED BY: WUD

MICHAEL D. SPRUCE, P.E.
52776
Palm Beach County
Water Utilities Department
P.O.Box 16097
West Palm Beach, FL 33416-6097

PROJECT NO. 149658011

FONTANA TOWNHOMES
PREPARED FOR
MERITAGE HOMES

PALM BEACH COUNTY FLORIDA

PALM BEACH COUNTY
WATER UTILITIES DEPARTMENT
P.O. BOX 16097
WEST PALM BEACH, FL 33416
(561)493-6000

| NO. | DATE | REVISION / REMARKS | BY |
|---|---|---|---|
| ✳ | JUNE 2019 | GENERAL REVISION | J.L. |
| 1 | 04/02/20 | FINAL PERMIT/CONST. PLANS | |

STD DETAILS

SHEET NUMBER 3 OF 5

SEAL

Jan 15, 2021

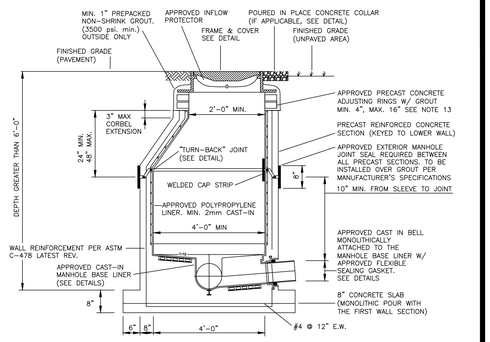


NOTES:

1. PRECAST CONCRETE TYPE II 4000 P.S.I. CALCAREOUS AGGREGATE REQUIRED (MIN. CaCO3 CONTENT: 65% IN LARGE AGGREGATE, 50% IN CONCRETE SCREENING).
2. RUB'R NEK (RU 106) OR APPROVED EQUAL AT ALL RISER JOINTS. SIZES TO BE SPECIFIED ON SHOP DRAWINGS.
3. ALL PIPE OPENINGS SHALL BE GAS TIGHT AND WATER TIGHT WITH NO EXPOSED CONCRETE SURFACES.
4. CAST OPENINGS SHALL BE MANUFACTURED WITH A POLYPROPYLENE SLEEVE CAST IN. APPROVED FLEXIBLE MANHOLE CONNECTORS SHALL BE USED AT PIPE CONNECTIONS. HOLE SIZE PER BOOT MANUFACTURER'S SPECIFICATIONS. DOUBLE PIPE CLAMPS MUST BE INSTALLED ON FLEXIBLE SLEEVES WHERE REQUIRED BY BOOT MANUFACTURER'S INSTALLATION INSTRUCTIONS.
5. CORED PIPE OPENINGS SHALL BE INSTALLED PER DETAIL. APPROVED FLEXIBLE CONNECTOR WILL BE INSTALLED ONTO POLY-PROPYLENE WALL SLEEVE. WALL SLEEVE SHALL BE EPOXIED INTO CORED OPENING AND THERMAL WELDED TO WALL LINER. BY LICENSED CONTRACTOR.
6. FLOW CHANNELS SHALL DIRECT INFLUENT INTO FLOW STREAM. (SEE DETAIL)
7. LIFT HOLES ARE PERMITTED.
8. INSIDE DROPS SHALL NOT BE DESIGNED TO EXCEED 1.80 FEET AND NOT CONSTRUCTED TO EXCEED 2.0 FEET. MAX. 6" INSIDE DROP IS PERMITTED FOR MANHOLES WITH 3 OR MORE INVERTS AND MANHOLES WITH A CHANGE IN FLOW DIRECTION OF MORE THAN 45 DEGREES.
9. MANHOLE FABRICATION SHALL BE IN ACCORDANCE WITH ASTM C-478, LATEST STANDARD.
10. MINIMUM 5 FEET IS REQUIRED BETWEEN OUTSIDE OF MANHOLE AND SERVICE WYE.
11. MANHOLES SHALL BE LINED INSIDE WITH AN APPROVED POLYPROPYLENE LINER SYSTEM. LINERS MUST BE WELDED BY LINER MFG CERTIFIED WELDERS AND BE CAST INTO THE MANHOLE BY A LINER MANUFACTURER CERTIFIED PRECASTER.
12. APPROVED INFLOW PROTECTORS ARE REQUIRED.
13. MAXIMUM HEIGHT OF CHIMNEY SHALL NOT EXCEED 24" (INCLUDING FRAME CASTING).
14. APPROVED THERMO-PLASTIC CHIMNEY LINER SHALL COMPLETELY COVER THE PRECAST CONCRETE GRADE RINGS AND SHALL BE SEALED TO THE CORBEL LINER BY MEANS OF AN APPROVED POLYISOPRENE LIP SEAL GASKET AND SEALED TO THE RING USING APPROVED BUTYL STRIPS. SEE DETAILS.
15. SOLID THERMO-PLASTIC CAST-IN LINER SYSTEM IS REQUIRED FOR LAST MANHOLE PRIOR TO A LIFT STATION, MANHOLES DEEPER THAN 14 FEET, MANHOLES WITH AN OUTSIDE DROP, AND MANHOLES WITH A FORCE MAIN CONNECTION. SEE APPROPRIATE DETAILS.
16. MANHOLES IN ROADWAYS SHALL BE LOCATED OUTSIDE OF WHEEL PATHS.

## STANDARD MANHOLE WITH CAST-IN LINER AND BASE LINER

29S

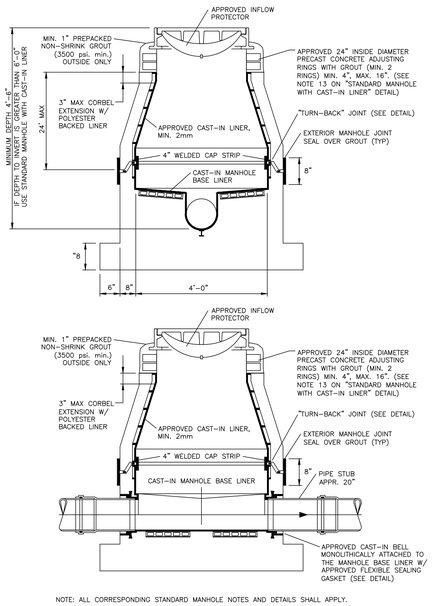


NOTE: ALL CORRESPONDING STANDARD MANHOLE NOTES AND DETAILS SHALL APPLY.

## SHALLOW MANHOLE WITH CAST-IN LINER AND BASE LINER

30S

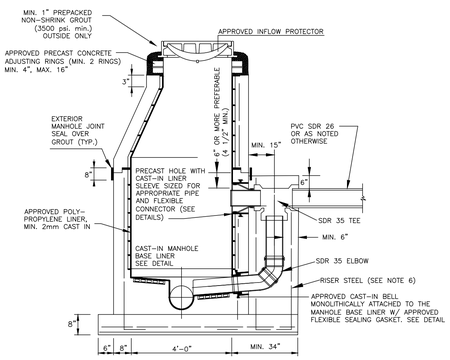


NOTES:

1. ALL DETAILS AND SPECIFICATIONS FOR "STANDARD MANHOLE WITH SOLID POLYPROPYLENE LINER SYSTEM" ARE APPLICABLE EXCEPT FOR REFERENCES TO DROP ASSEMBLY.
2. THE PRECAST BASE SHALL EXTEND FULLY UNDER THE DROP ASSEMBLY.
3. PRECAST DROP ENCASEMENT REQUIRED UP TO TOP EDGE OF 90 DEGREE ELBOW, BRICK AND CONCRETE RUBBLE ARE PERMITTED AS FILLER IN REMAINDER OF DROP ENCASEMENT.
4. DROP CONNECTIONS SHALL BE REQUIRED WHENEVER AN INFLUENT INVERT IS LOCATED 2.0 FEET OR MORE ABOVE THE MAIN INVERT CHANNEL. DROP CONNECTIONS SHOULD NOT BE DESIGNED FOR LESS THAN A 2.4 FOOT DROP.
5. PVC SDR 26 PIPE WITH PVC SCH 35 FITTINGS SHALL BE UTILIZED IN THE DROP ASSEMBLY.
6. DROP ENCASEMENT REINFORCING STEEL TO BE CAST IN PLACE WITH BASE (4 RODS) OR USE 4-1/2" DIA. COIL LOOP INSERTS CAST IN PLACE WITH BASE (TO BE USED WITH 1/2" COIL' RODS). COIL LOOP INSERTS TO BE "DAYTON SUPERIOR" B16, 1/2"X 4" OR APPROVED EQUAL.

## OUTSIDE DROP MANHOLE WITH CAST-IN LINER AND BASE LINER

31S

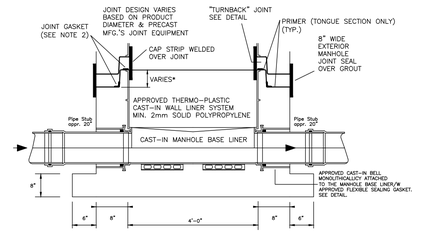


NOTES:

1. LINER WELDING SHALL BE PERFORMED EXCLUSIVELY BY LICENSED, CERTIFIED WELDERS.
2. SHOP DRAWINGS SHALL CALL OUT THE SIZE, TYPE AND POSITIONING OF THE APPROVED JOINT SEALANT.
3. PRIMER TO BE APPLIED BY THE PRECASTER (TONGUE SECTION ONLY).

## MANHOLE BASE SECTION

32S

NOTES:

1. APPROVED PLUMBING PLAN MUST BE ON JOB SITE FOR INSPECTION. IF NOT, INSTALLATION WILL BE REJECTED.
2. PLUMBING SHALL CONFORM TO ALL PALM BEACH COUNTY AND OTHER APPLICABLE CODES.
3. ***TEMPORARY CAP IN PLACE (NO SEWAGE), UPSTREAM OF THE VENT PIPE TO BE IN PLACE UNTIL WUD INSPECT AND INSTALL VALVE***
4. EXISTING SEPTIC TANK TO BE ABANDONED IN ACCORDANCE WITH LOCAL HEALTH DEPT. SPECIFICATIONS.
5. AIR INTAKE ASSEMBLY IS REQUIRED.
6. AIR VAC VALVE WILL BE INSTALLED BY UTILITY **AFTER** 4" AIR-INTAKE ASSEMBLY IS IN PLACE.
7. 6. SEWER CONNECTION FEES TO BE PAID PRIOR TO CONNECTION.
8. ***TEMPORARY CAP IN PLACE UNTIL WUD INSPECT AND INSTALL VALVE.***
9. ***CAP IS NOT TO BE REMOVED UNTIL WUD HAS INSTALLED VALVE***

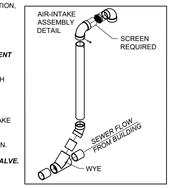


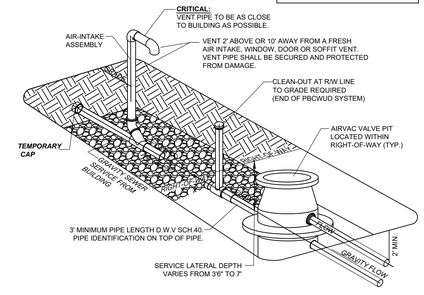


## TYPICAL WASTEWATER SERVICE INSTALLATION FOR VACUUM SEWER SYSTEM

82S

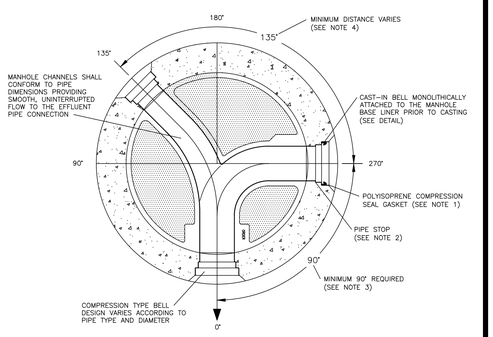


NOTES:

1. ONLY THE POLYISOPRENE GASKET PROVIDED BY THE MANHOLE BASE LINER MANUFACTURER SHALL BE USED IN COMPRESSION TYPE BELLS.
2. CONNECTION PIPES SHALL BE INSERTED COMPLETELY INTO THE BELL CONNECTOR FLUSH WITH THE PIPE STOP PROVIDING A SMOOTH TRANSITION FROM PIPE TO MANHOLE BASE LINER CHANNEL.
3. MINIMUM OF 90 DEGREES BETWEEN INCOMING, LEFT OR RIGHT OF OUTGOING PIPE. DISTANCE BETWEEN CONNECTIONS MAY VARY ACCORDING TO MANHOLE DIAMETER, PIPE SIZE AND TYPE.
4. MINIMUM DISTANCE BETWEEN INFLUENT PIPE CONNECTIONS MAY VARY AND SHALL BE SPECIFIED BY THE LINER MANUFACTURER ACCORDING TO MANHOLE AND/OR PIPE DIAMETER AND TYPE.

## FLOW CHANNEL/PIPE CONNECTION TO NEW CAST-IN BASE LINER

33S

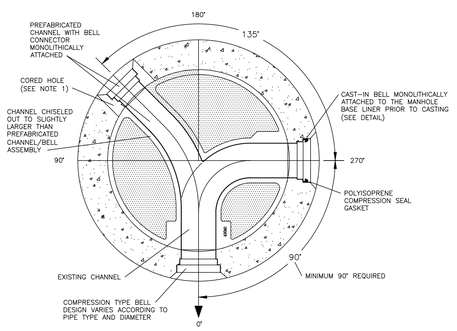


NOTES:

1. CORED OPENING AND CHANNEL DIAMETER PER CHANNEL/BELL MANUFACTURER REQUIREMENTS. SIZES SHALL BE SPECIFIED ON SHOP DRAWING.
2. ONLY AN APPROVED CHANNEL/BELL ASSEMBLY PROVIDED BY THE BASE LINER MANUFACTURER SHALL BE USED.
3. CHANNEL/BELL ASSEMBLY MUST BE COMPLETELY GROUTED IN PLACE USING AN APPROVED CEMENT.
4. UPON "SETTING" OF GROUT, THE NEW CHANNEL/BELL ASSEMBLY MUST BE JOINED TO THE EXISTING MANHOLE BASE LINER BY EITHER THERMO-PLASTIC WELDING OR FRP PATCH AS SPECIFIED BY BASE LINER MANUFACTURER.

## FLOW CHANNEL/ PIPE CONNECTION TO EXISTING CAST-IN BASE LINER

34S

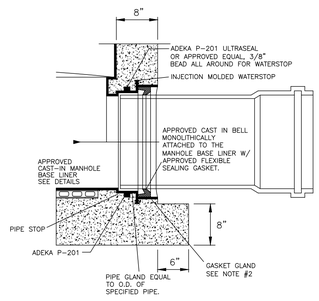


INSTALLATION:

1. CLEAN BELL REMOVING ANY EXCESS CONCRETE, SLURRY OR DIRT INSIDE BELL.
2. INSTALL GASKET AS SHOWN.
3. LUBRICATE PIPE SPIGOT AND SLIDE INTO BELL AND GASKET UNTIL REACHING PIPE STOP.
4. CHECK FOR WATERTIGHT CONNECTION. (VACUUM TESTING OR OTHER APPROVED METHOD).

DO NOT LUBRICATE THE GASKET OR THE BELL

NOTES:

1. MANHOLE SHOP DRAWINGS SHALL IDENTIFY THE TYPE OF MANHOLE/PIPE CONNECTION.
2. ONLY THE POLYISOPRENE GASKET SUPPLIED BY THE BELL MANUFACTURER SHALL BE USED IN COMPRESSION TYPE BELLS.
3. BOOT HUB VARIES ACCORDING TO GASKET MANUFACTURER'S SPECIFICATION FOR SPECIFIC PIPE SIZE AND TYPE.
4. MANHOLE SHOP DRAWINGS MUST IDENTIFY THE PIPE SIZE, TYPE, GASKET TYPE AND HOLE SIZE.

## PIPE TO MANHOLE CONNECTION DETAIL TYPE "A" (GASKET)

35S

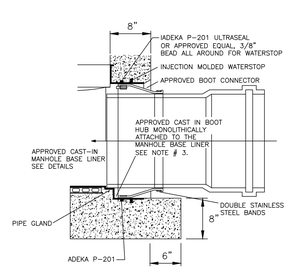


INSTALLATION:

1. CLEAN BOOT HUB REMOVING ANY EXCESS CONCRETE, SLURRY OR DIRT INSIDE BELL.
2. INSTALL RUBBER BOOT CONNECTOR (PER MANUFACTURER'S INSTRUCTIONS). WEDGE STYLE EXPANDER BOLTS MUST BE ALIGNED WITH THE "TOP" OF BOOT HUB ACCESS NOTCH.
3. PRE-MITER PIPE END AS REQUIRED TO PREDETERMINED PIPE DEFLECTION ANGLE. MERELY "DE-BURR" PIPE END – DO NOT CHAMFER OR BEVEL PIPE END.
4. LUBRICATE SPIGOT; ORIENT PIPE MITER; SLIDE INTO RUBBER BOOT CONNECTOR; "HOME" PIPE TO BASE LINER CHANNEL END; DEFLECT PIPE AS REQUIRED. INSPECT MANHOLE BASE INTERIOR FOR CHANNEL/PIPE INVERT ALIGNMENT AND SEAL; TIGHTEN RUBBER BOOT CLAMP (PER MANUFACTURER'S INSTRUCTIONS).
1. CHECK FOR WATERTIGHT CONNECTION; (VACUUM TESTING OR OTHER APPROVED METHOD).

DO NOT LUBRICATE THE GASKET OR THE BELL

NOTES:

1. MANHOLE SHOP DRAWINGS SHALL IDENTIFY THE TYPE OF MANHOLE/PIPE CONNECTION.
2. ONLY THE POLYISOPRENE GASKET SUPPLIED BY THE BELL MANUFACTURER SHALL BE USED IN COMPRESSION TYPE BELLS.
3. BOOT HUB VARIES ACCORDING TO GASKET MANUFACTURER'S SPECIFICATION FOR SPECIFIC PIPE SIZE AND TYPE.
4. MANHOLE SHOP DRAWINGS MUST IDENTIFY THE PIPE SIZE, TYPE, GASKET TYPE AND HOLE SIZE.

## PIPE TO MANHOLE CONNECTION TYPE "B" (BOOT)

36S

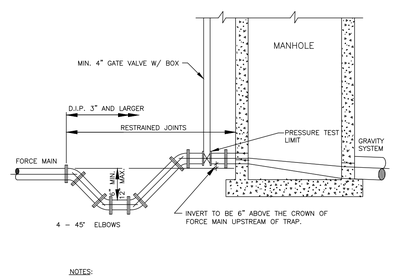


NOTES:

1. FORCE MAIN TO ENTER MANHOLE AS CLOSE AS POSSIBLE TO 180° TO GRAVITY OUTLET.
2. THE INVERT LEVEL OF FORCE MAIN AT POINT OF ENTRY SHALL BE 6" ABOVE OUTFLOW INVERT OF MANHOLE.
3. CORE ENTRY ONLY INTO EXISTING MANHOLES.
4. TRAP TO BE LOCATED PRIOR TO DROP INTO MANHOLE AND OUTSIDE OF PAVED AREAS.
5. USE TWO 45° ELBOWS PAST TRAP IF ELEVATION DROP IS REQUIRED TO ENTER MANHOLE.
6. CAST-IN OR FIELD INSTALLED FLOW CHANNEL IS REQUIRED.
7. MANHOLE WALL TO BE COATED WITH AN APPROVED SOLID THERMOPLASTIC CAST-IN CORROSION BARRIER SYSTEM.
8. TRAP JOINTS TO BE RESTRAINED.

## FORCE MAIN ENTERING MANHOLE

43S

# WASTEWATER #4 STANDARD DETAILS

CONSULTANT:
Kimley»Horn
1615 S CONGRESS AVE, SUITE 201, DELRAY BEACH, FL 33445
PHONE: 561-330-2345 FAX: 561-330-2245
WWW.KIMLEY-HORN.COM CA 00000696

IT'S THE LAW !
CALL 48 HOURS BEFORE YOU DIG
1-800-432-4770
SUNSHINE STATE ONE CALL OF FLORIDA, INC.
UTILITIES NOTIFICATION CENTER

DESIGNED BY: WUD
DRAWN BY: WUD CADD
CHECKED BY: A. GALICKI
APPROVED BY: WUD

MICHAEL D. SPRUCE, P.E.
52776
Palm Beach County
Water Utilities Department
P.O.Box 16097
West Palm Beach, FL 33416-6097

PROJECT NO. 149658011

FONTANA TOWNHOMES
PREPARED FOR
MERITAGE HOMES

PALM BEACH COUNTY FLORIDA

PALM BEACH COUNTY
WATER UTILITIES DEPARTMENT
P.O. BOX 16097
WEST PALM BEACH, FL 33416
(561)493-6000

| NO. | DATE | REVISION / REMARKS | BY |
|---|---|---|---|
| 1 | JUNE 2019 | GENERAL REVISION | J.L. |
| | 04/02/20 | FINAL PERMIT/CONST. PLANS | |

STD DETAILS

SHEET NUMBER 4 OF 5

SEAL

Jan 15, 2021

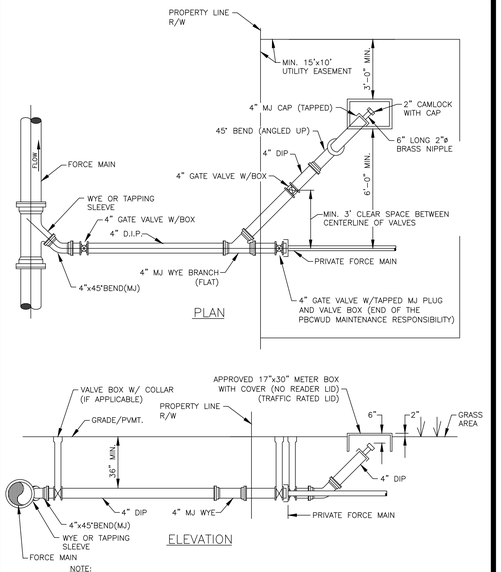


NOTE:

1. THE FLUSHING CONNECTION SHALL BE LOCATED IN GRASS AREA.
2. ALL 4" PIPES SHALL BE RESTRAINED.

CONNECTION OF PRIVATE FORCE MAIN UNDER 4" IN DIAMETER

37S

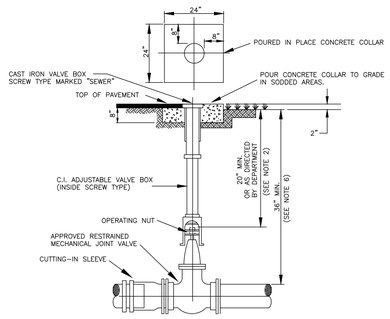


NOTES:

1. CONCRETE COLLAR IS NOT REQUIRED IN PAVED AREAS IF PAVEMENT SURFACE IS FINISHED PRIOR TO CONDITIONAL FINAL INSPECTION.
2. WHEN OPERATING NUT IS DEEPER THAN 36" A ONE PIECE EXTENSION WILL BE REQUIRED TO BRING OPERATING NUT 20"–30" BELOW FINISHED GRADE. EXTENSION BOLTS & NUTS ARE TO BE STAINLESS STEEL. A HIGH STRENGTH STEEL CENTERING PLATE, WELDED TO THE EXTENSION, IS ALSO REQUIRED.
3. VALVE BOXES SHALL HAVE COVERS MARKED "SEWER".
4. EXTENSION VALVE BOX TO BE D.I.P. OR C-900 PVC DR 18 (COLOR: GREEN).
5. A CUT–IN INSTALLATION SHALL REQUIRE MEGALUGS OR EQUAL THROUGHOUT ASSEMBLY.
6. IN ORDER TO MAINTAIN ADEQUATE COVER OVER VALVE NUT, THE FOLLOWING MINIMUM COVERS OVER PIPE ARE REQUIRED:

| GATE VALVE SIZE | MIN. COVER OVER PIPE |
|---|---|
| 16" | 48" |
| 20" | 54" |
| 24" | 60" |
| 30" | 72" |
| 36" | 84" |

7. PIPE SHALL BE RESTRAINED ON BOTH SIDES OF THE VALVE AS REQUIRED.
8. VALVES IN ROADWAYS SHALL BE LOCATED OUTSIDE OF WHEEL PATHS WHENEVER POSSIBLE.

TYPICAL FORCE MAIN GATE VALVE SETTING AND CUT–IN DETAIL

38S

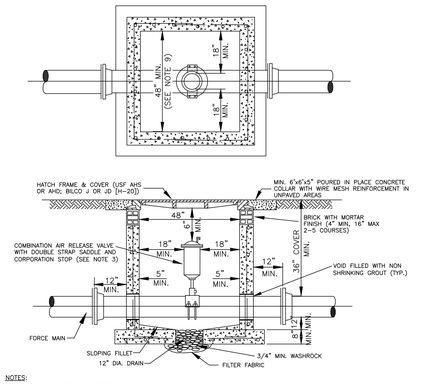


NOTES:

1. 4000 P.S.I. TYPE II CONCRETE
2. VAULT SHALL BE PRECAST WITH STEEL REINFORCING. SHOP DRAWING IS REQUIRED TO BE APPROVED BY THE DEPARTMENT PRIOR TO VAULT CONSTRUCTION AND/OR INSTALLATION.
3. COMBINATION AIR RELEASE VALVE (ARV) SHALL BE TYPE AND SIZE APPROPRIATE FOR SERVICE INTENDED. ALTHOUGH A 2" MINIMUM SIZED ARV IS REQUIRED ON FORCE MAIN INSTALLATIONS.
4. ALL OPENINGS SHALL BE SEALED WITH WATERPROOF NON–SHRINKING GROUT.
5. ALTERNATE VAULT AND COVER DESIGN MAY BE USED PROVIDED ALTERNATE VAULT AND/OR COVER SHOP DRAWINGS WERE SUBMITTED AND APPROVED BY THE DEPARTMENT PRIOR TO THE VAULT AND/OR COVER BEING INSTALLED.
6. COAT INSIDE WITH AN APPROVED CORROSION BARRIER SYSTEM.
7. DUCTILE IRON PIPE IS REQUIRED THROUGH THE VAULT. NO PIPE JOINTS WITHIN THE VAULT.
8. THREADED AREAS OF CORPORATION STOP SHALL BE SPIRAL WRAPPED WITH TWO WRAPS OF TEFLON TAPE.
9. LARGER VAULTS WILL BE REQUIRED FOR PIPES LARGER THAN 12"

| PIPE SIZE | MIN. VAULT SIZE |
|---|---|
| 16"–24" | 4'W x 5'L |
| 30"–42" | 4'W x 6'L |

FORCE MAIN AIR RELEASE VALVE AND VAULT OUTSIDE OF R/W, NON–TRAFFIC AREAS

39S

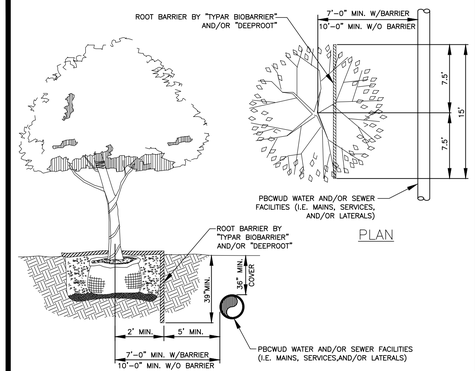


NOTES:

1. TREES SHOWN ON THIS PLAN ARE FOR GRAPHIC REPRESENTATION ONLY. TREE SPACING IS BASED ON DESIGN REQUIREMENTS AND THE TREES SHOWN ON THESE PLANS ATTEMPT TO ACCOMPLISH THAT SPACING WHILE MAINTAINING THE REQUIRED SETBACKS FROM UTILITIES. TREES MAY BE FIELD ADJUSTED TO AVOID CONFLICTS WITH DRIVEWAYS AND UNDERGROUND UTILITIES. IN ANY CASE THE TREES SHALL BE LOCATED IN THE FIELD IN ACCORDANCE WITH THE PLANTING DETAILS SHOWN HEREON.
2. TREES ARE TO BE INSTALLED WITH A TEN FOOT (10') SEPARATION FROM ANY WATER OR SEWER MAIN AND/OR SERVICE, HYDRANTS, AND LIFT STATIONS. IF A TEN FOOT (10') SEPARATION CANNOT BE ACHIEVED, THE TREE CAN BE INSTALLED WITH A ROOT BARRIER SYSTEM. HOWEVER, IN NO CASE SHALL A TREE ENCROACH INTO A PBCUE WITHOUT PRIOR DEPARTMENT APPROVAL.

LANDSCAPE AND ROOT BARRIER DETAIL

84S

MIN. LENGTH OF PIPE (FEET) TO BE RESTRAINED

(SOURCES: EBAA IRON RESTRAINT LENGTH CALCULATION PROGRAM FOR PVC PIPE, RELEASE 3.1, AND DIPRA THRUST RESTRAINT FOR DUCTILE IRON PIPE, RELEASE 3.2)

| FITTING TYPE | | PIPE SIZE 4" | 6" | 8" | 10" | 12" | 16" | 20" | 24" | 30" | 36" | 42" | 48" |
|---|---|---|---|---|---|---|---|---|---|---|---|---|---|
| 90° HORIZ. BEND | | 14 | 20 | 25 | 30 | 35 | 45 | 54 | 62 | 73 | 84 | 93 | 101 |
| 45° HORIZ. BEND | | 6 | 8 | 11 | 13 | 15 | 19 | 22 | 26 | 30 | 35 | 38 | 42 |
| 22.5° HORIZ. BEND | | 3 | 4 | 5 | 6 | 7 | 9 | 11 | 12 | 15 | 17 | 18 | 20 |
| 11.25° HORIZ. BEND | | 1 | 2 | 3 | 3 | 4 | 4 | 5 | 6 | 7 | 8 | 9 | 10 |
| 90° VERT. OFFSET | UPPER BEND | 29 | 41 | 53 | 64 | 74 | 95 | 115 | 134 | 160 | 185 | 207 | 228 |
| | LOWER BEND | 7 | 10 | 13 | 16 | 19 | 25 | 30 | 35 | 42 | 49 | 56 | 62 |
| 45° VERT. OFFSET | UPPER BEND | 12 | 19 | 24 | 29 | 34 | 39 | 48 | 56 | 66 | 77 | 86 | 94 |
| | LOWER BEND | 3 | 4 | 6 | 7 | 8 | 10 | 12 | 15 | 18 | 20 | 23 | 26 |
| 22.5° VERT. OFFSET | UPPER BEND | 6 | 9 | 12 | 14 | 17 | 19 | 23 | 27 | 32 | 37 | 41 | 45 |
| | LOWER BEND | 1 | 2 | 4 | 4 | 4 | 5 | 6 | 7 | 8 | 10 | 11 | 12 |
| 11.25° VERT. OFFSET | UPPER BEND | 3 | 4 | 6 | 7 | 8 | 9 | 11 | 13 | 16 | 18 | 20 | 22 |
| | LOWER BEND | 1 | 1 | 1 | 2 | 2 | 2 | 3 | 3 | 4 | 5 | 5 | 6 |
| PLUG (DEAD END) | | 32 | 45 | 59 | 70 | 83 | 107 | 129 | 151 | 160 | 185 | 207 | 228 |
| IN–LINE VALVE | | 32 | 45 | 45 | 45 | 45 | 55 | 65 | 80 | 85 | 95 | 105 | 115 |
| TEE (BRANCH RESTRAINT) | 4"x ø | 23 | – | – | – | – | – | – | – | – | – | – | – |
| | 6"x ø | 21 | 35 | – | – | – | – | – | – | – | – | – | – |
| | 8"x ø | 18 | 34 | 47 | – | – | – | – | – | – | – | – | – |
| | 10"x ø | 16 | 32 | 46 | 58 | – | – | – | – | – | – | – | – |
| | 12"x ø | 13 | 30 | 44 | 57 | 69 | – | – | – | – | – | – | – |
| | 16"x ø | 7 | 26 | 41 | 55 | 67 | 90 | – | – | – | – | – | – |
| | 20"x ø | 1 | 21 | 38 | 52 | 65 | 88 | 109 | – | – | – | – | – |
| | 24"x ø | 1 | 16 | 34 | 49 | 62 | 86 | 108 | 129 | – | – | – | – |
| | 30"x ø | 1 | 8 | 28 | 44 | 58 | 83 | 106 | 127 | 154 | – | – | – |
| | 36"x ø | 1 | 1 | 22 | 39 | 54 | 80 | 103 | 124 | 153 | 179 | – | – |
| | 42"x ø | 1 | 1 | 15 | 33 | 49 | 77 | 100 | 122 | 151 | 177 | 201 | – |
| | 48"x ø | 1 | 1 | 7 | 27 | 44 | 73 | 97 | 120 | 149 | 176 | 200 | 222 |
| REDUCER (LARGER PIPE RESTRAINT) | 6"x ø | 23 | – | – | – | – | – | – | – | – | – | – | – |
| | 8"x ø | 38 | 25 | – | – | – | – | – | – | – | – | – | – |
| | 10"x ø | 57 | 43 | 24 | – | – | – | – | – | – | – | – | – |
| | 12"x ø | 72 | 60 | 44 | 41 | – | – | – | – | – | – | – | – |
| | 16"x ø | 99 | 90 | 78 | 75 | 45 | – | – | – | – | – | – | – |
| | 20"x ø | 123 | 116 | 107 | 105 | 81 | 45 | – | – | – | – | – | – |
| | 24"x ø | 146 | 140 | 132 | 131 | 111 | 82 | 45 | – | – | – | – | – |
| | 30"x ø | 157 | 153 | 148 | 141 | 133 | 113 | 87 | 56 | – | – | – | – |
| | 36"x ø | 182 | 179 | 175 | 169 | 163 | 147 | 126 | 101 | 56 | – | – | – |
| | 42"x ø | 205 | 202 | 199 | 194 | 189 | 175 | 150 | 138 | 100 | 54 | – | – |
| | 48"x ø | 226 | 224 | 221 | 217 | 213 | 201 | 187 | 169 | 138 | 98 | 53 | – |

NOTES:

1. THE DATA IN THE ABOVE TABLE ARE BASED UPON THE FOLLOWING INSTALLATION CONDITIONS:
   SOIL TYPE–SAND TEST PRESSURE–150 PSI DEPTH OF BURY–3'
   TRENCH TYPE–3 SAFETY FACTOR– 1.5 VERTICAL OFFSET–3'
   MINIMUM PIPE LENGTH ALONG TEE RUN–5'
2. THE RESTRAINED PIPE LENGTHS APPLY TO DUCTILE IRON AND PVC PIPE.
3. ALL JOINTS BETWEEN UPPER AND LOWER BENDS SHALL BE RESTRAINED.
4. RESTRAINED PIPE LENGTHS APPLY TO PIPE ON BOTH SIDES OF VALVES AND FITTINGS.
5. MULTIPLY PIPE LENGTH BY 1.4 FOR POLYETHYLENE ENCASED PIPE.
6. RESTRAINED PIPE LENGTHS EQUAL TO AN "INLINE VALVE" CONDITION ARE REQUIRED AT EACH END OF A TRANSITION FROM HDPE PIPE TO OTHER PIPE MATERIALS.
7. DESIGN ENGINEER IS RESPONSIBLE FOR PROPER RESTRAINT PIPE LENGTH SIZING FOR THE PROJECT.

MECHANICAL THRUST RESTRAINT MINIMUM PIPE LENGTHS (FORCE MAINS)

41S

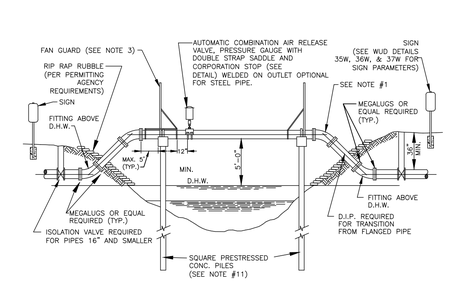


NOTES:

1. ALL EXPOSED PIPE SHALL BE DUCTILE IRON OR PREFABRICATED STEEL WITH FLANGED FITTINGS AND PROFILED GASKETS. RETAINER GLANDS AND UNIFLANGE TYPE FITTINGS ARE NOT TO BE SUBSTITUTED FOR FLANGED FITTINGS. PREFABRICATED STEEL PIPE MAY INCORPORATE WELDED ON LONG RADIUS UPPER BENDS. PREFABRICATED FLANGED PIPE SHALL BE FACTORY TESTED.
2. SPAN LENGTHS AS REQUIRED BY PERMITTING AGENCY
3. FAN GUARDS ARE REQUIRED. SEE FAN GUARD/PILE CAP DESIGN DETAILS, FOR ADDITIONAL REQUIREMENTS. ACCESS PLATFORM AND GATE REQUIRED ON ARV SIDE ONLY.

4A. ALL EXPOSED PIPING SHALL BE PAINTED AS SPECIFIED IN THE APPROVED MATERIAL LIST.

4B. ALL HARDWARE SHALL BE PAINTED WITH COAL–TAR EPOXY.

5. PIPE SHALL BE CRADLED ON ¾" THICK NEOPRENE, (MURO–METER GRADE 50) CURRENT FDOT STANDARDS APPLY. NEOPRENE IS REQUIRED AT ALL STRAPS INSTALLED OVER STEEL PIPE. NEOPRENE SHALL EXTEND 1" BEYOND THE EDGES OF CRADLE AND STRAPS.
6. TIE–DOWN STRAPS MUST PROPERLY FIT AND SECURE PIPE IN CRADLE.
7. PIPE CRADLE IN CAP SHALL CONTACT ⅔ CIRCUMFERENCE OF PIPE. (SEE FAN GUARD DETAIL)
8. SHOW EXISTING CANAL CROSS SECTION, ULTIMATE CANAL SECTION, AND RELEVANT ELEVATIONS AND DISTANCES ON A TO SCALE DETAIL DRAWING.
9. PILE LIFT CABLE SHALL BE REMOVED BELOW SURFACE; HOLE SHALL BE FILLED WITH EPOXY CEMENT.
10. THREADED AREAS OF BRASS FITTINGS SHALL BE SPIRAL WRAPPED WITH TWO WRAPS OF TEFLON TAPE.
11. THE PILES AND CAP DESIGN SHALL BE SHOWN ON TO SCALE SIGNED AND SEALED DETAIL DRAWINGS. MIN. 12"x12" TYPE 1A FLORIDA DOT INDEX PILES ARE REQUIRED. PILE PENETRATION BELOW CANAL BOTTOM SHALL BE 15' MINIMUM. MINIMUM LOAD CAPACITY OF 20 TONS PER PILE IS REQUIRED (FDOT STANDARDS APPLY). SIGNED AND SEALED SHOP DRAWINGS ARE REQUIRED.
12. PREFABRICATED STEEL PIPE SHAL HAVE WELDED ON BEARING PADS EXTENDING MIN. 1" BEYOND PIPE CRADLE. THE PADS SHALL BE INSTALLED BY STEEL PIPE MANUFACTURER PRIOR TO PAINTING.
13. FORCE MAIN CROSSINGS OVER BODIES OF WATER MAY BE SUBJECT TO A D.E.P. "NOTICED GENERAL ENVIRONMENTAL RESOURCE PERMIT" (NOP)

TYPICAL FORCE MAIN AERIAL CANAL CROSSING – SINGLE PIPE (SINGLE PILES)

45S

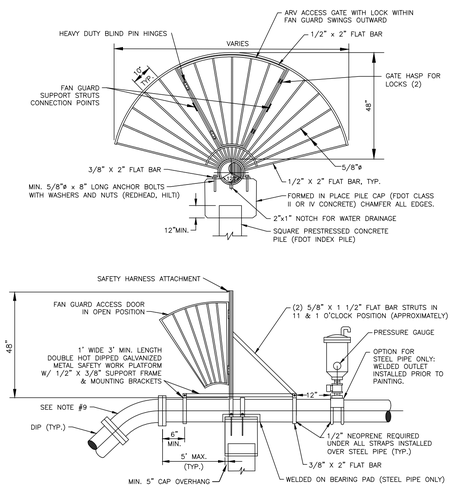


NOTES:

1. FAN GUARDS SHALL BE PLACED AT EACH END OF CANAL CROSSING.
2. HARDWARE SHALL BE PAINTED WITH COAL TAR EPOXY.
3. FANGUARD WITH HARDWARE SHALL BE FABRICATED FROM DOUBLE HOT DIPPED GALVANIZED STEEL.
4. SHOP DRAWINGS FOR FANGUARDS, CAPS, AND PILES MUST BE SUBMITTED TO PBCWUD FOR REVIEW AND APPROVAL PRIOR TO PRE–CONSTRUCTION MEETING.
5. REINFORCING STEEL SHALL CONFORM TO ASTM A–615, GRADE 60. MIN. 2" CONCRETE COVER OVER ALL STEEL.
6. SEE "TYPICAL CANAL CROSSING DETAIL" FOR ADDITIONAL REQUIREMENTS.
7. NO WELDING OF REBAR TO REBAR OR REBAR TO PILE STRANDS SHALL BE ALLOWED.
8. DESIGN DRAWINGS ARE REQUIRED.
9. LONG RADIUS WELDED ON UPPER BENDS ARE ACCEPTABLE FOR STEEL PIPE.
10. IF A PILE/CAP STEEL CONNECTION IS REQUIRED BY DESIGNING ENGINEER, MIN. (4) #8 REINFORCEMENT BARS SHALL BE DRILLED AND DOWELED (EPOXIED) MIN. 16" DEEP INTO THE PILE AND TIED WITH THE CAP STEEL.
11. ACCESS PLATFORM AND GATE REQUIRED ON ARV SIDE ONLY.

FAN GUARD/ PILE CAP DESIGN – SINGLE PIPE (SINGLE PILES)

46S

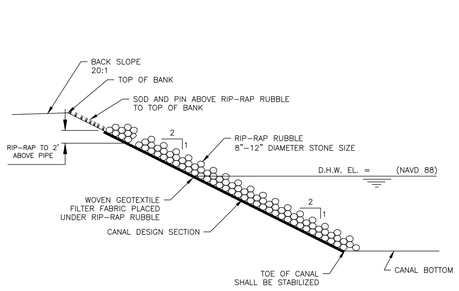


NOTES:

1. RIP–RAP RUBBLE AND ITS INSTALLATION MUST MEET CANAL OWNERSHIP SPECIFICATIONS AND PERMITTING REQUIREMENTS.
2. DUMP RUBBLE IN PLACE FORMING A COMPACT LAYER CONFORMING TO THE CANAL DESIGN SECTION SLOPE. ENSURE THAT RUBBLE DOES NOT SEGREGATE SO THAT SMALLER PIECES EVENLY FILL THE VOIDS BETWEEN LAGER PIECES.
3. AN ALTERNATIVE DESIGN WILL BE CONSIDERED AND MUST RECEIVE PRIOR APPROVAL FROM THE CANAL PROPERTY OWNER.

RIP–RAP RUBBLE DETAIL

83S

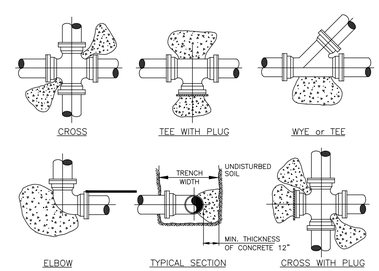


| PIPE | THRUST BLOCK AREA REQ'D | REMARKS | NOTE: FOR OTHER FITTINGS USE THE FOLLOWING FACTORS. |
|---|---|---|---|
| 4" | 2.0 SQ. FT. | VALUES ARE FOR 90° BEND, BASED ON 2000 P.S.F. SAFE BEARING LOAD AND PIPE PRESSURE OF 150 P.S.I. FOR OTHER SOILS & PRESSURES THE AREA REQUIRED IS IN DIRECT PROPORTION | TEE 100% |
| 6" | 4.0 SQ. FT. | | 45° BEND 71% |
| 8" | 6.6 SQ. FT. | | 22 1/2° BEND 39% |
| 10" | 10.0 SQ. FT. | | 11 1/4° BEND 20% |
| 12" | 14.0 SQ. FT. | | DEAD END 100% |
| 14" | 18.6 SQ. FT. | | |

NOTES:

1. CONCRETE THRUST BLOCKS OR THRUST COLLARS MAY BE UTILIZED ONLY IF NECESSARY FOR CONNECTIONS TO AN EXISTING PIPING SYSTEM, OTHERWISE MECHANICAL RESTRAINTS SHALL BE USED. KEEP "T" BOLTS CLEAR OF CONCRETE, WRAPPED IN VISQUEEN FOR FUTURE ACCESS, WITH A MINIMUM OF 1' THICKNESS BETWEEN THE FITTING AND SOIL.
2. BEFORE POURING CONCRETE, PLUGS SHALL BE WRAPPED WITH VISQUEEN AND A BOARD PLACED IN FRONT.
3. CONCRETE SHALL BE 2500 P.S.I. MINIMUM.
4. THE ENGINEER OF RECORD SHALL SUBMIT A THRUST BLOCK SIZE CALCULATION FOR TEE CONNECTIONS INTO UNRESTRAINED EXISTING MAINS LARGER THAN 14".
5. THE ENGINEER OF RECORD SHALL SUBMIT A PIPE RESTRAINT DESIGN FOR INLINE EXTENSIONS OF A EXISTING UNRESTRAINED MAIN IF MECHANICAL JOINT RESTRAINT CAN NOT BE INSTALLED ON THE EXISTING MAIN.

TYPICAL THRUST BLOCKS FOR PRESSURE PIPING

42S

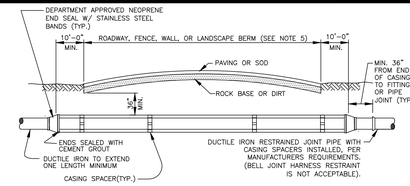


| CARRIER PIPE SIZE | STEEL CASING INSIDE DIAMETER (MIN) | MINIMUM WALL THICKNESS (SEE NOTE 2) |
|---|---|---|
| 4" | 12" | .188 |
| 6" | 14" | .250 |
| 8" | 20" | .250 |
| 10" | 20" | .250 |
| 12" | 24" | .250 |
| 14" | 24" | .250 |
| 16" | 30" | .312 |
| 18" | 30" | .312 |
| 20" | 36" | .372 |
| 24" | 42" | .500 |
| 30" | 48" | .500 |
| 36" | 54" | .625 |
| 42" | 60" | .625 |
| 48" | 72" | .625 |

NOTES:

1. A PROFILE DRAWING TO SCALE FOR EACH JACK AND BORE, DIRECTIONAL DRILL, OR DIRECT BURIED INSTALLATION IS REQUIRED TO BE APPROVED BY THE DEPARTMENT PRIOR TO INSTALLATION. IF A SPLIT CASING IS REQUIRED THEN SHOP DRAWINGS ARE REQUIRED TO BE SUBMITTED AND APPROVED BY THE DEPARTMENT PRIOR TO CONSTRUCTION AND/OR INSTALLATION.
2. THICKER WALL CASINGS AND LARGER COVER OVER CASING MAY BE REQUIRED BY THE RIGHT–OF–WAY OWNER.
3. STEEL CASING SHALL BE COATED OUTSIDE WITH COAL TAR EPOXY (MIN. 16 MILS DFT) AND BE PAINTED WITH A 4" MINIMUM WIDE CONTINUOUS STRIPE, COLOR CODED TO MATCH THE PIPE INSIDE, ALONG THE TOP AXIS OF THE CASING.
4. PIPE IN CASING SHALL BE PULLED TO FULLY ENGAGE RESTRAINT.
5. STEEL CASING IS REQUIRED FOR ALL WASTEWATER MAIN INSTALLATIONS UTILIZING JACK AND BORE CONSTRUCTION AND WHEN MAINS ARE INSTALLED UNDER FENCES, WALLS, OR LANDSCAPE BERMS. WHEN THE CASING IS INSTALLED UNDER FENCES, WALLS, OR LANDSCAPE BERMS IT SHALL BE CENTERED ON THE PREVIOUS BARRIER AND IS REQUIRED TO EXTEND 10' MINIMUM PAST BARRIER ON EACH SIDE UNLESS OTHERWISE PREVIOUSLY APPROVED BY THE DEPARTMENT.

WASTEWATER MAIN CASING INSTALLATION

44S

WASTEWATER #5
STANDARD DETAILS

CONSULTANT:
Kimley»Horn
1615 S CONGRESS AVE, SUITE 201, DELRAY BEACH, FL 33445
PHONE: 561–330–2345 FAX: 561–330–2240
WWW.KIMLEY–HORN.COM CA 00000696

IT'S THE LAW ! CALL 48 HOURS BEFORE YOU DIG
1-800-432-4770
SUNSHINE STATE ONE CALL OF FLORIDA, INC.
UTILITIES NOTIFICATION CENTER

DESIGNED BY: WUD
DRAWN BY: WUD CADD
CHECKED BY: A. GALICKI
APPROVED BY: WUD

MICHAEL D. SPRUCE, P.E.
52776
Palm Beach County
Water Utilities Department
P.O.Box 16097
West Palm Beach, FL 33416–6097

PROJECT NO. 149658011

FONTANA TOWNHOMES
PREPARED FOR
MERITAGE HOMES

PALM BEACH COUNTY FLORIDA

PALM BEACH COUNTY
WATER UTILITIES DEPARTMENT
P.O. BOX 16097
WEST PALM BEACH, FL 33416
(561)493–6000

| NO. | DATE | REVISION / REMARKS | BY |
|---|---|---|---|
| 1 | JUNE 2019 | GENERAL REVISION | J.L. |
| 2 | 04/02/20 | FINAL PERMIT/CONST. PLANS | |

STD DETAILS

SHEET NUMBER 5 OF 5

SEAL

Jan 15, 2021

Drawing: K:\bcd_civil\149658011 - davis road\CADD\plansheets\WUD.dwg\WW-5 - Last Modified: Fri, Jan 15, 2021 - 10:27am

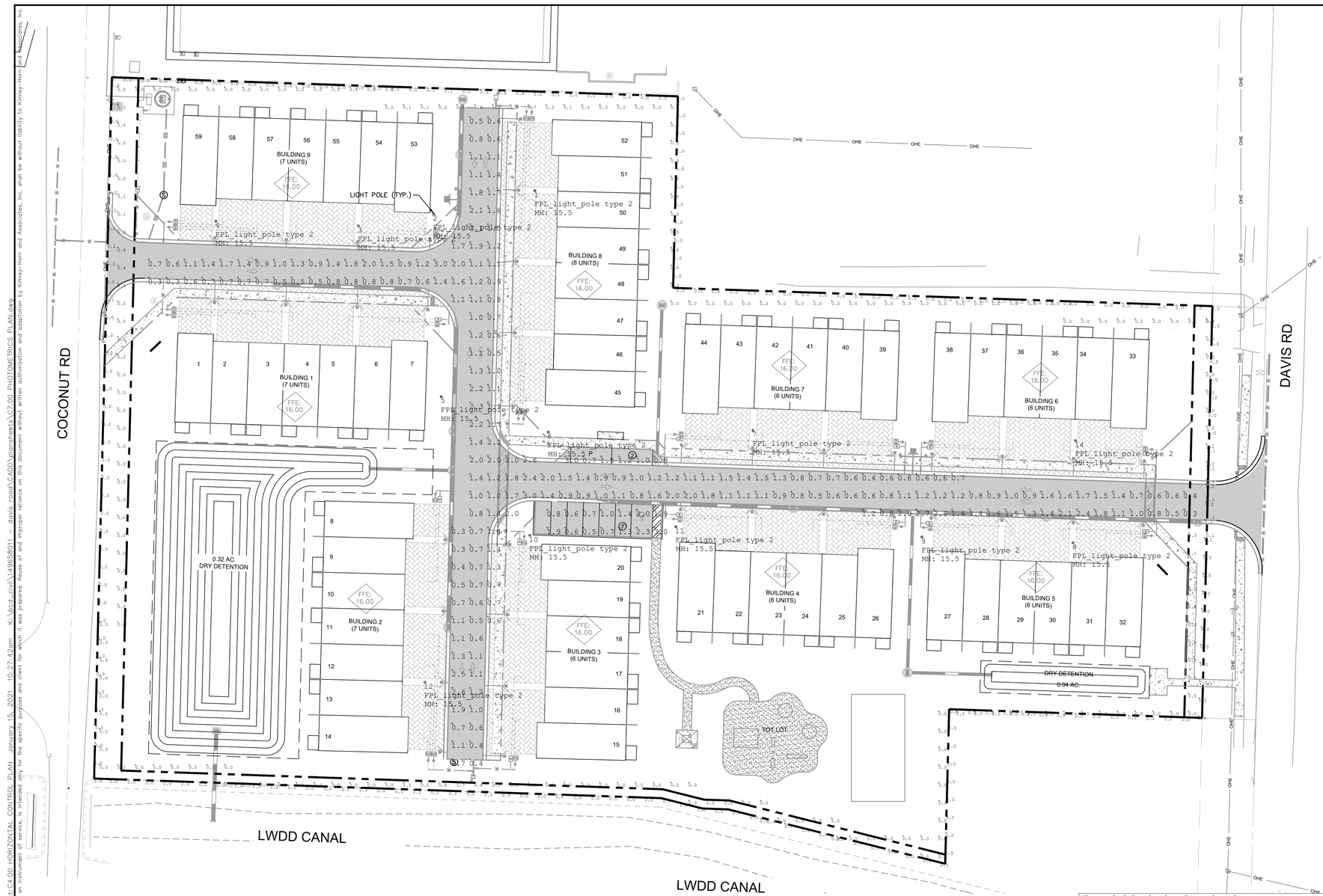


GRAPHIC SCALE IN FEET
0 15 30 60

NORTH

## LEGEND

PROPERTY LINE

LIGHTING POLE WITH SINGLE FIXTURE, TOWN & COUNTRY POST TOP (EPTT) 1ST GENERATION, 120-277 VOLTAGE, 07 LUMEN OUTPUT, ASYMMETRIC HO, NONE REFRACTOR, 3000K LED COLOR TEMP, ANSI C136.417-PIN DIMMING PE SOCKET CONTROL, POLE MOUNTED IN BLACK.

INITIAL LUMENS PER LAMP = 6,980
NUMBER OF POLES = 13

## LIGHTING NOTES

1. LUMINAIRE SHALL BE AS INDICATED PER LEGEND, DETAILS AND NOTES.
2. ALL WIRING SHALL BE UNDERGROUND, 24" MIN. CONDUIT BURIAL DEPTH.
3. LOCATION OF LUMINAIRES SHALL BE A MINIMUM OF 3' FROM ALL UTILITIES.

## WINDLOAD NOTES

ALL POLE INSTALLATIONS SHALL BE SUITABLE FOR 170 MPH WIND WITH APPROPRIATE GUST FACTOR PER APPLICABLE ZONE OF INSTALLATION AS DEFINED IN THE FLORIDA BUILDING CODE. THE CONTRACTOR SHALL INCLUDE WITH THE SHOP DRAWING SUBMITTAL, A POLE WIND LOADING CALCULATION SIGNED AND SEALED BY A STRUCTURAL ENGINEER REGISTERED IN FLORIDA SHOWING THAT THE PROPOSED INSTALLATIONS WILL MEET THE GIVEN WIND LOADING REQUIREMENT.

| Luminaire Schedule | | | | | | | |
|---|---|---|---|---|---|---|---|
| Symbol | Qty | Label | Tag | LLF | Description | Lum. Watts | BUG Rating |
| ⊡ | 13 | GE TRADITIONAL CARRIAGE | FPL_light_pole type 2 | 0.950 | EPTT01_07DN30_____-120-277V | 73 | B2-U0-G2 |

| Calculation Summary | | | | | | | |
|---|---|---|---|---|---|---|---|
| Label | CalcType | Units | Avg | Max | Min | Avg/Min | Max/Min |
| Parking area | Illuminance | Fc | 1.35 | 3.0 | 0.5 | 2.70 | 6.00 |
| ROADWAY | Illuminance | Fc | 1.17 | 3.0 | 0.3 | 3.90 | 10.00 |
| PROPERTY LINE VERT_RESIDENT | Illuminance | Fc | 0.00 | 0.0 | 0.0 | N.A. | N.A. |
| PROPERTY LINE VERT_NON_RESIDENT | Illuminance | Fc | 0.06 | 1.3 | 0.0 | N.A. | N.A. |
| PROPERTY LINE HORIZ_RESIDENT | Illuminance | Fc | 0.00 | 0.0 | 0.0 | N.A. | N.A. |
| PROPERTY LINE HORIZ_NON_RESIDENT | Illuminance | Fc | 0.03 | 0.4 | 0.0 | N.A. | N.A. |

| Expanded Luminaire Location Summary | | | | | |
|---|---|---|---|---|---|
| LumNo | Label | X | Y | Z | Orient |
| 1 | GE TRADITIONAL CARRIAGE | 950691.667 | 831028.556 | 15.5 | 180 |
| 2 | GE TRADITIONAL CARRIAGE | 950634.907 | 831015.388 | 15.5 | 0.028 |
| 3 | GE TRADITIONAL CARRIAGE | 950592.692 | 831008.925 | 15.5 | 270 |
| 4 | GE TRADITIONAL CARRIAGE | 950512.906 | 831011.447 | 15.5 | 271.867 |
| 5 | GE TRADITIONAL CARRIAGE | 950639.194 | 830913.14 | 15.5 | 0 |
| 6 | GE TRADITIONAL CARRIAGE | 950699.126 | 830893.283 | 15.5 | 270 |
| 7 | GE TRADITIONAL CARRIAGE | 950813.863 | 830894.233 | 15.5 | 267.686 |
| 8 | GE TRADITIONAL CARRIAGE | 950993.11 | 830831.272 | 15.5 | 88.831 |
| 9 | GE TRADITIONAL CARRIAGE | 950908.536 | 830834.421 | 15.5 | 90 |
| 10 | GE TRADITIONAL CARRIAGE | 950688.859 | 830835.344 | 15.5 | 179.091 |
| 11 | GE TRADITIONAL CARRIAGE | 950770.721 | 830840.085 | 15.5 | 88.191 |
| 12 | GE TRADITIONAL CARRIAGE | 950630 | 830753 | 15.5 | 0 |
| 14 | GE TRADITIONAL CARRIAGE | 950994.606 | 830888.362 | 15.5 | 267.686 |

PLANS ARE IN NAVD 1988 DATUM

Always call 811 two full business days before you dig to have underground utilities located and marked.
Sunshine811.com

THE PRESENCE OF GROUNDWATER SHOULD BE ANTICIPATED. CONTRACTOR'S BID SHALL INCLUDE CONSIDERATION FOR ADDRESSING THIS ISSUE AND OBTAINING ALL NECESSARY PERMITS.

| No. | REVISIONS | DATE | BY |
|---|---|---|---|

Kimley»Horn
© 2021 KIMLEY-HORN AND ASSOCIATES, INC.
1615 S. CONGRESS AVE, SUITE 201,
DELRAY BEACH, FL 33445
PHONE: 561-330-2345 FAX: 561-863-8175
WWW.KIMLEY-HORN.COM REGISTRY 696

LICENSED PROFESSIONAL
NICHOLAS J. CLAVELO, P.E.
FLORIDA LICENSE NUMBER
84366
DATE: _____

KHA PROJECT 149658011
DATE JAN 2021
SCALE AS SHOWN
DESIGNED BY YXY
DRAWN BY YXY
CHECKED BY MDS

# PHOTOMETRICS PLAN

# FONTANA TOWNHOMES
PREPARED FOR
MERITAGE HOMES
VILLAGE OF PALM SPRINGS FLORIDA

SHEET NUMBER
C7.00

Plotted By:YL Yomoi Sheet Set:FONTANA TOWNHOMES Layout:C4.00 HORIZONTAL CONTROL PLAN January 15, 2021 10:27:42am K:\bcd_civil\149658011 – davis road\CADD\plansheets\C7.00 PHOTOMETRICS PLAN.dwg
This document, together with the concepts and designs presented herein, as an instrument of service, is intended only for the specific purpose and client for which it was prepared. Reuse of and improper reliance on this document without written authorization and adaptation by Kimley-Horn and Associates, Inc. shall be without liability to Kimley-Horn and Associates, Inc.

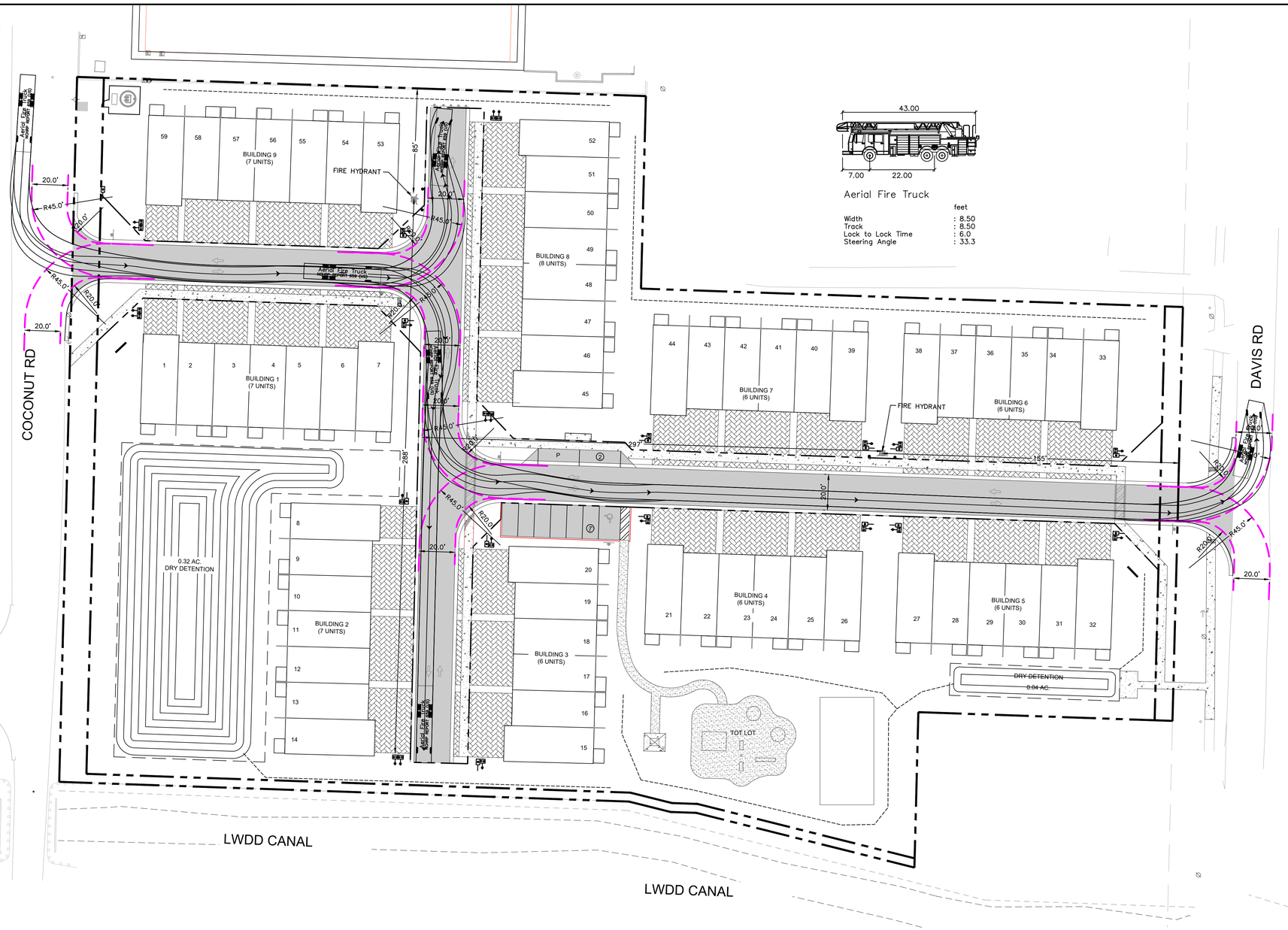





Aerial Fire Truck

| | feet |
|---|---|
| Width | : 8.50 |
| Track | : 8.50 |
| Lock to Lock Time | : 6.0 |
| Steering Angle | : 33.3 |

NORTH

GRAPHIC SCALE IN FEET
0 15 30 60

LEGEND

PROPERTY LINE

PLANS ARE IN NAVD 1988 DATUM

Always call 811 two full business days before you dig to have underground utilities located and marked.
Sunshine811.com

THE PRESENCE OF GROUNDWATER SHOULD BE ANTICIPATED. CONTRACTOR'S BID SHALL INCLUDE CONSIDERATION FOR ADDRESSING THIS ISSUE AND OBTAINING ALL NECESSARY PERMITS.

| No. | REVISIONS | DATE | BY |
|---|---|---|---|

Kimley»Horn

© 2021 KIMLEY-HORN AND ASSOCIATES, INC.
1615 S. CONGRESS AVE, SUITE 201,
DELRAY BEACH, FL 33445
PHONE: 561-330-2345 FAX: 561-863-8175
WWW.KIMLEY-HORN.COM REGISTRY 696

LICENSED PROFESSIONAL
MICHAEL D. SPRUCE, P.E.
FLORIDA LICENSE NUMBER
52776
DATE: _____

| | |
|---|---|
| KHA PROJECT | 149658011 |
| DATE | JAN 2021 |
| SCALE | AS SHOWN |
| DESIGNED BY | YXY |
| DRAWN BY | YXY |
| CHECKED BY | MDS |

# AUTOTURN PLAN

# FONTANA TOWNHOMES

PREPARED FOR
MERITAGE HOMES

VILLAGE OF PALM SPRINGS FLORIDA

SHEET NUMBER
C8.00

Plotted By: YL Yomoi Sheet Set: FONTANA TOWNHOMES Layout: AUTOTURN PLAN – FIRE January 15, 2021 10:27:57am K:\brd_civil\149658011 – davis road\CADD\plotsheets\C8.00 AUTOTURN PLAN.dwg
This document, together with the concepts and designs presented herein, as an instrument of service, is intended only for the specific purpose and client for which it was prepared. Reuse of and improper reliance on this document without written authorization and adaptation by Kimley-Horn and Associates, Inc. shall be without liability to Kimley-Horn and Associates, Inc.

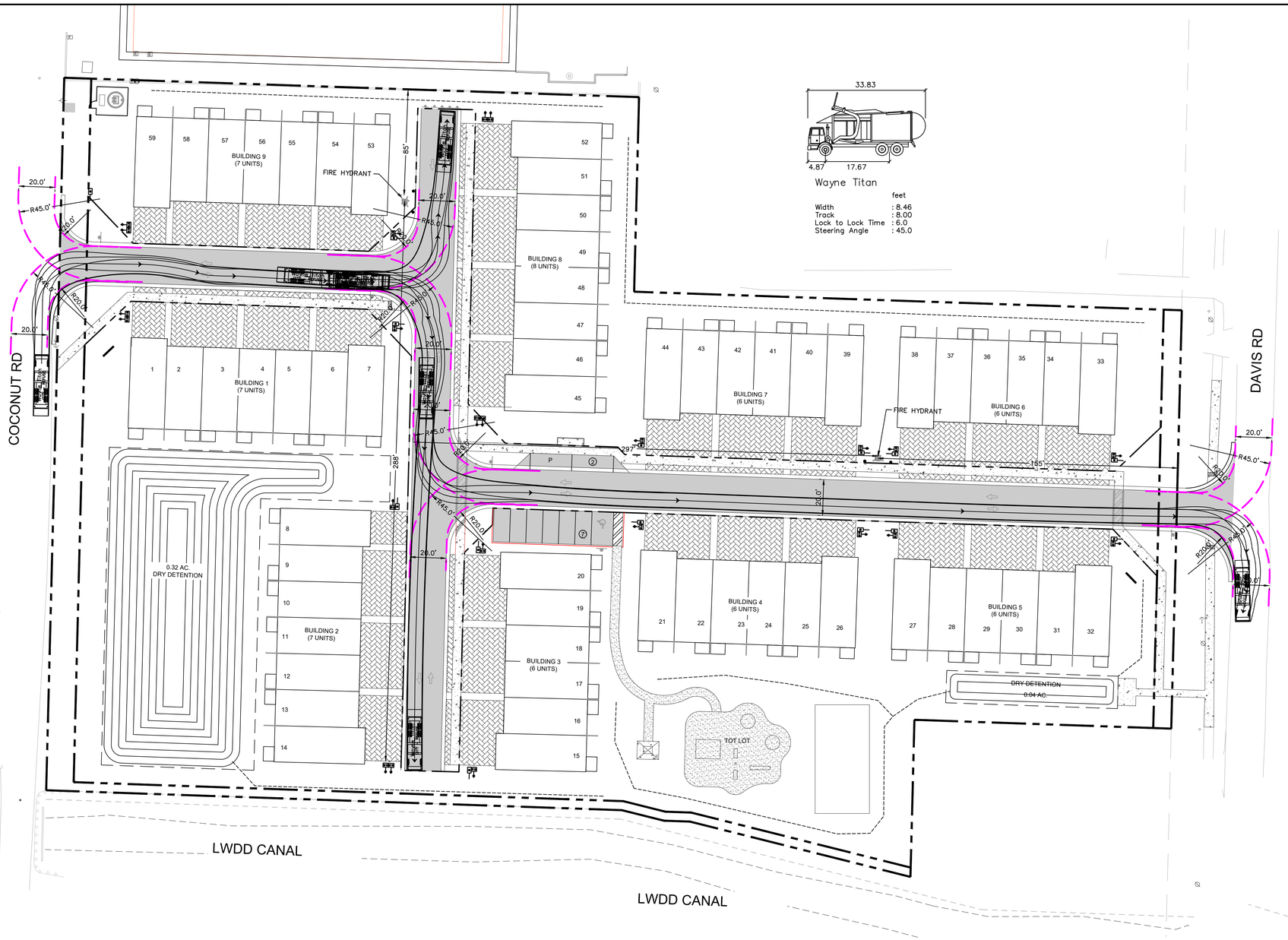


PLANS ARE IN NAVD 1988 DATUM

**Always call 811 two full business days before you dig to have underground utilities located and marked.**

**Sunshine811.com**

THE PRESENCE OF GROUNDWATER SHOULD BE ANTICIPATED. CONTRACTOR'S BID SHALL INCLUDE CONSIDERATION FOR ADDRESSING THIS ISSUE AND OBTAINING ALL NECESSARY PERMITS.

| No. | REVISIONS | DATE | BY |
|---|---|---|---|


Kimley»Horn


© 2021 KIMLEY-HORN AND ASSOCIATES, INC.


1615 S. CONGRESS AVE, SUITE 201,
DELRAY BEACH, FL 33445
PHONE: 561-330-2345 FAX: 561-863-8175
WWW.KIMLEY-HORN.COM REGISTRY 696


LICENSED PROFESSIONAL
MICHAEL D. SPRUCE, P.E.
FLORIDA LICENSE NUMBER
52776
DATE: _____

| | |
|---|---|
| KHA PROJECT | 149658011 |
| DATE | JAN 2021 |
| SCALE | AS SHOWN |
| DESIGNED BY | YXY |
| DRAWN BY | YXY |
| CHECKED BY | MDS |

# AUTOTURN PLAN

# FONTANA TOWNHOMES

PREPARED FOR
MERITAGE HOMES

VILLAGE OF PALM SPRINGS, FLORIDA

SHEET NUMBER
C8.01


Plotted By: YL Yomoi Sheet Set: FONTANA TOWNHOMES Layout: C8.01 AUTOTURN PLAN January 15, 2021 10:28:01am K:\bcd_civil\149658011 – davis road\CADD\plansheets\C8.00_AUTOTURN PLAN.dwg
This document, together with the concepts and designs presented herein, as an instrument of service, is intended only for the specific purpose and client for which it was prepared. Reuse of and improper reliance on this document without written authorization and adaptation by Kimley-Horn and Associates, Inc. shall be without liability to Kimley-Horn and Associates, Inc.

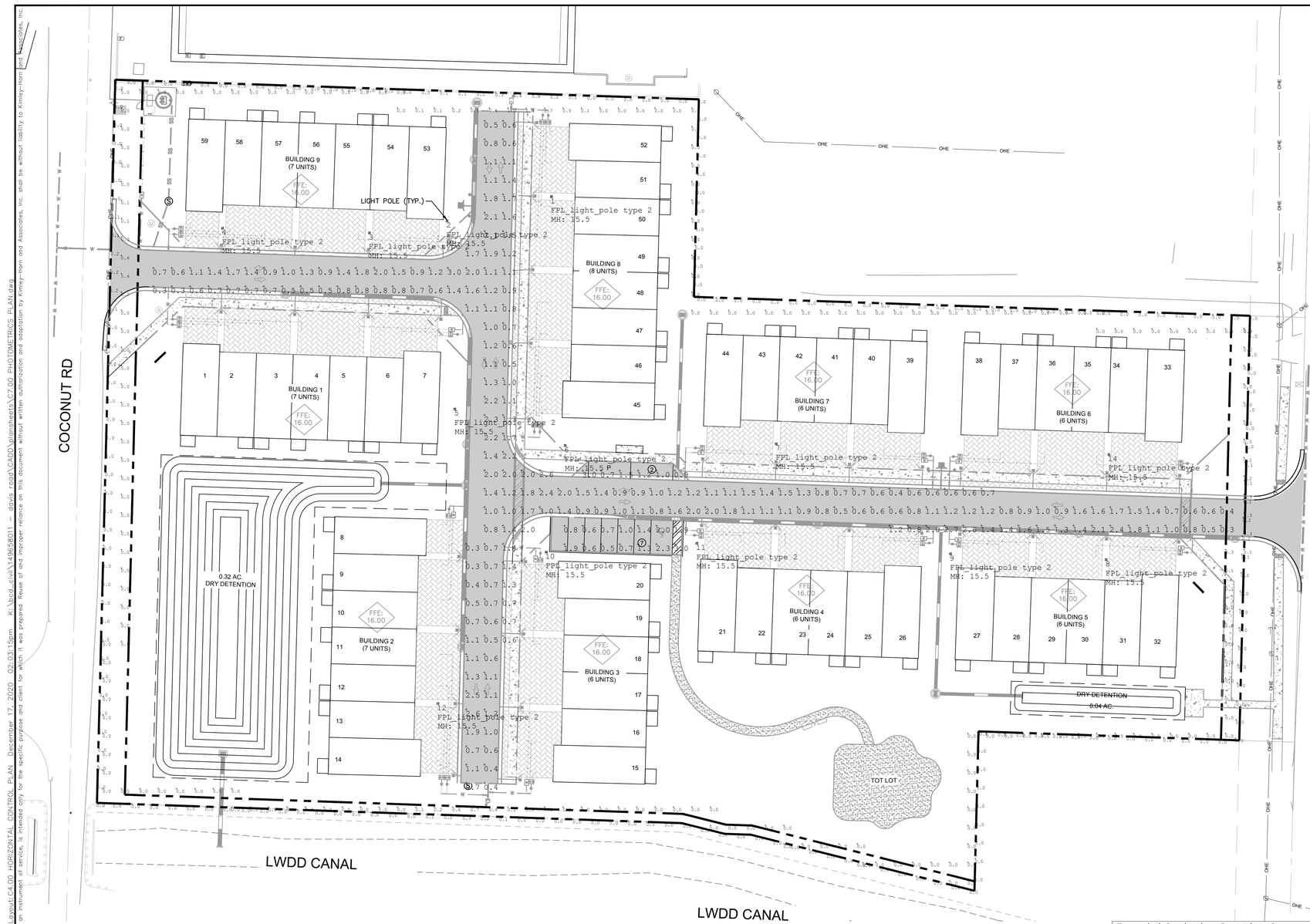


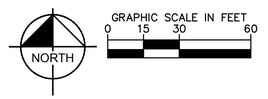


## LEGEND

PROPERTY LINE

LIGHTING POLE WITH SINGLE FIXTURE, TOWN & COUNTRY POST TOP (EPTT) 1ST GENERATION, 120-277 VOLTAGE, 07 LUMEN OUTPUT, ASYMMETRIC HO, NONE REFRACTOR, 3000K LED COLOR TEMP, ANSI C136.417-PIN DIMMING PE SOCKET CONTROL, POLE MOUNTED IN BLACK.

INITIAL LUMENS PER LAMP = 6,980
NUMBER OF POLES = 13

## LIGHTING NOTES

1. LUMINAIRE SHALL BE AS INDICATED PER LEGEND, DETAILS AND NOTES.
2. ALL WIRING SHALL BE UNDERGROUND, 24" MIN. CONDUIT BURIAL DEPTH.
3. LOCATION OF LUMINAIRES SHALL BE A MINIMUM OF 3' FROM ALL UTILITIES.

## WINDLOAD NOTES

ALL POLE INSTALLATIONS SHALL BE SUITABLE FOR 170 MPH WIND WITH APPROPRIATE GUST FACTOR PER APPLICABLE ZONE OF INSTALLATION AS DEFINED IN THE FLORIDA BUILDING CODE. THE CONTRACTOR SHALL INCLUDE WITH THE SHOP DRAWING SUBMITTAL, A POLE WIND LOADING CALCULATION SIGNED AND SEALED BY A STRUCTURAL ENGINEER REGISTERED IN FLORIDA SHOWING THAT THE PROPOSED INSTALLATIONS WILL MEET THE GIVEN WIND LOADING REQUIREMENT.

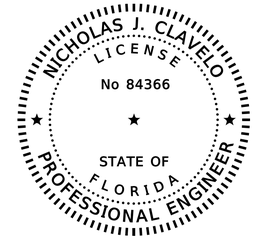


THIS ITEM HAS BEEN DIGITALLY SIGNED AND SEALED BY NICHOLAS J. CLAVELO, P.E. ON THE DATE ADJACENT TO THE SEAL.

PRINTED COPIES OF THIS DOCUMENT ARE NOT CONSIDERED SIGNED AND SEALED AND THE SIGNATURE MUST BE VERIFIED ON ANY ELECTRONIC COPIES.

| Luminaire Schedule | | | | | | | |
|---|---|---|---|---|---|---|---|
| Symbol | Qty | Label | Tag | LLF | Description | Lum. Watts | BUG Rating |
| ⊡ | 13 | GE TRADITIONAL CARRIAGE | FPL_light_pole type 2 | 0.950 | EPTT01_07DN30_____-120-277V | 73 | B2-U0-G2 |

| Calculation Summary | | | | | | | |
|---|---|---|---|---|---|---|---|
| Label | CalcType | Units | Avg | Max | Min | Avg/Min | Max/Min |
| Parking area | Illuminance | Fc | 1.35 | 3.0 | 0.5 | 2.70 | 6.00 |
| ROADWAY | Illuminance | Fc | 1.17 | 3.0 | 0.3 | 3.90 | 10.00 |
| PROPERTY LINE VERT_RESIDENT | Illuminance | Fc | 0.00 | 0.0 | 0.0 | N.A. | N.A. |
| PROPERTY LINE VERT_NON_RESIDENT | Illuminance | Fc | 0.06 | 1.3 | 0.0 | N.A. | N.A. |
| PROPERTY LINE HORIZ_RESIDENT | Illuminance | Fc | 0.00 | 0.0 | 0.0 | N.A. | N.A. |
| PROPERTY LINE HORIZ_NON_RESIDENT | Illuminance | Fc | 0.03 | 0.4 | 0.0 | N.A. | N.A. |

| Expanded Luminaire Location Summary | | | | | |
|---|---|---|---|---|---|
| LumNo | Label | X | Y | Z | Orient |
| 1 | GE TRADITIONAL CARRIAGE | 950691.667 | 831028.556 | 15.5 | 180 |
| 2 | GE TRADITIONAL CARRIAGE | 950634.907 | 831015.388 | 15.5 | 0.028 |
| 3 | GE TRADITIONAL CARRIAGE | 950592.692 | 831008.925 | 15.5 | 270 |
| 4 | GE TRADITIONAL CARRIAGE | 950512.906 | 831011.447 | 15.5 | 271.867 |
| 5 | GE TRADITIONAL CARRIAGE | 950639.194 | 830913.14 | 15.5 | 0 |
| 6 | GE TRADITIONAL CARRIAGE | 950699.126 | 830893.283 | 15.5 | 270 |
| 7 | GE TRADITIONAL CARRIAGE | 950813.863 | 830894.233 | 15.5 | 267.686 |
| 8 | GE TRADITIONAL CARRIAGE | 950993.11 | 830831.272 | 15.5 | 88.831 |
| 9 | GE TRADITIONAL CARRIAGE | 950908.536 | 830834.421 | 15.5 | 90 |
| 10 | GE TRADITIONAL CARRIAGE | 950688.859 | 830835.344 | 15.5 | 179.091 |
| 11 | GE TRADITIONAL CARRIAGE | 950770.721 | 830840.085 | 15.5 | 88.191 |
| 12 | GE TRADITIONAL CARRIAGE | 950630 | 830753 | 15.5 | 0 |
| 14 | GE TRADITIONAL CARRIAGE | 950994.606 | 830888.362 | 15.5 | 267.686 |

PLANS ARE IN NAVD 1988 DATUM

Always call 811 two full business days before you dig to have underground utilities located and marked.
Sunshine811.com

THE PRESENCE OF GROUNDWATER SHOULD BE ANTICIPATED. CONTRACTOR'S BID SHALL INCLUDE CONSIDERATION FOR ADDRESSING THIS ISSUE AND OBTAINING ALL NECESSARY PERMITS.

| No. | REVISIONS | DATE | BY |
|---|---|---|---|
| | | | |

Kimley»Horn
© 2020 KIMLEY-HORN AND ASSOCIATES, INC.
1615 S. CONGRESS AVE., SUITE 201,
DELRAY BEACH, FL 33445
PHONE: 561-330-2345 FAX: 561-863-8175
WWW.KIMLEY-HORN.COM CA 00000696

LICENSED PROFESSIONAL
NICHOLAS J. CLAVELO, P.E.
FLORIDA LICENSE NUMBER
84366
DATE: ____

| | |
|---|---|
| KHA PROJECT | 149658011 |
| DATE | DEC 2020 |
| SCALE | AS SHOWN |
| DESIGNED BY | YXY |
| DRAWN BY | YXY |
| CHECKED BY | MDS |

# PHOTOMETRICS PLAN

# FONTANA TOWNHOMES

PREPARED FOR
MERITAGE HOMES
VILLAGE OF PALM SPRINGS FLORIDA

SHEET NUMBER
C7.00

Plotted By:Vidalon, Teresa Sheet Set:FONTANA TOWNHOMES Layout:C4.00_HORIZONTAL CONTROL PLAN December 17, 2020 02:03:15pm K:\bcd_civil\149658011 - davis road\CADD\sheetsets\C7.00_PHOTOMETRICS_PLAN.dwg
This document, together with the concepts and designs presented herein, as an instrument of service, is intended only for the specific purpose and client for which it was prepared. Reuse of and improper reliance on this document without written authorization and adaptation by Kimley-Horn and Associates, Inc. shall be without liability to Kimley-Horn and Associates, Inc.

# SPECIFIC PURPOSE SURVEY

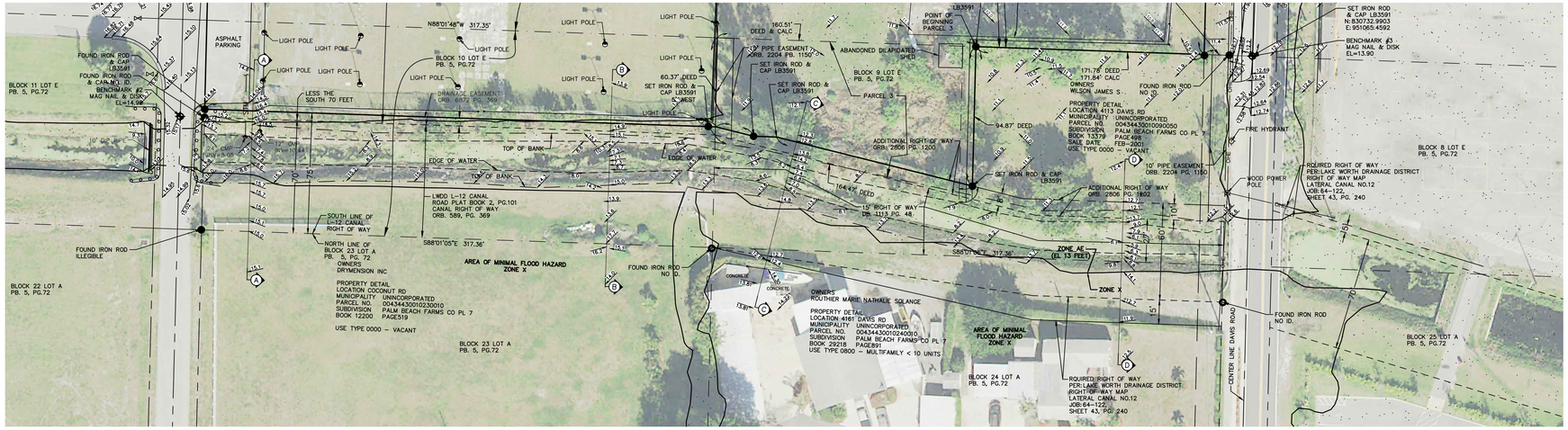


NORTH

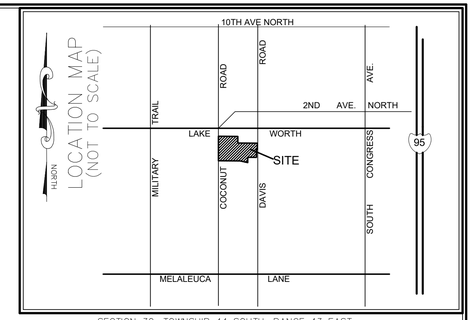


SECTION 30, TOWNSHIP 44 SOUTH, RANGE 43 EAST

GRAPHIC SCALE

30 0 15 30 60 120

( IN FEET )
1 INCH = 30 FT.

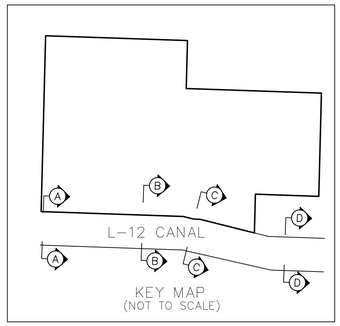


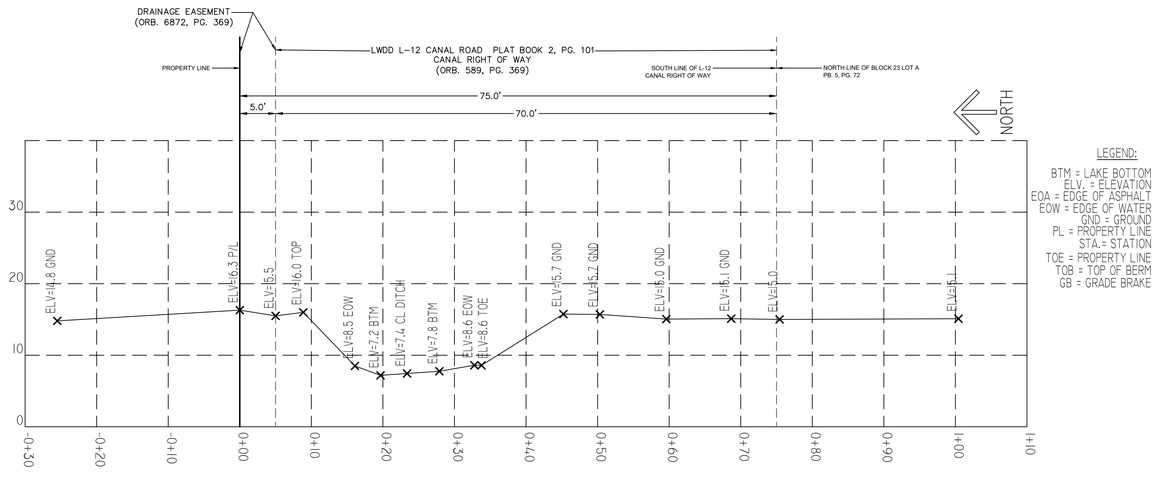


SECTION AA
HORIZONTAL SCALE 1"=10'
VERTICAL SCALE 1"=10'
DATUM (NAVD. 88)

**NOTES**

1. THIS SURVEY OR REPRODUCTIONS THEREOF ARE NOT VALID WITHOUT THE SIGNATURE AND THE ORIGINAL SEAL, OR THE AUTHENTICATED ELECTRONIC SIGNATURE AND SEAL OF A FLORIDA LICENSED PROFESSIONAL SURVEYOR AND MAPPER.
2. ELEVATIONS SHOWN HEREON ARE RELATIVE TO THE NORTH AMERICAN VERTICAL DATUM OF 1988 (NAVD88).
3. COORDINATES SHOWN HEREON ARE RELATIVE TO THE FLORIDA STATE PLANE COORDINATE SYSTEM, EAST ZONE, NORTH AMERICAN DATUM OF 1983 (1990 ADJUSTMENT), AS DETERMINED BY THE PALM BEACH COUNTY SURVEY DEPARTMENT.
4. UNDERGROUND FOUNDATIONS WERE NOT LOCATED.
5. ADDITIONS OR DELETIONS TO SURVEY MAPS BY OTHER THAN THE SIGNING PARTY OR PARTIES IS PROHIBITED WITHOUT WRITTEN CONSENT OF THE SIGNING PARTY OR PARTIES.
6. FLOOD ZONE: "X", COMMUNITY PANEL NO. 12099C0776 F; DATE: OCTOBER 05, 2017, AND FLOOD ZONE: "AE", (EL 13 FEET) COMMUNITY PANEL NO. 12099C0776 F; DATE: OCTOBER 05, 2017.
7. BENCHMARK ORIGIN DESCRIPTION: PALM BEACH COUNTY BENCHMARK S104. ELEVATION = 14.074 (NAVD88).

**CERTIFICATE:**

I HEREBY CERTIFY THAT THE ATTACHED SPECIFIC PURPOSE SURVEY OF THE HEREON DESCRIBED PROPERTY IS TRUE AND CORRECT TO THE BEST OF MY KNOWLEDGE AND BELIEF AS SURVEYED UNDER MY DIRECTION ON OCTOBER 28, 2020. I FURTHER CERTIFY THAT THIS SPECIFIC PURPOSE SURVEY MEETS THE STANDARDS OF PRACTICE SET FORTH IN CHAPTER 5J-17 ADOPTED BY THE FLORIDA BOARD OF SURVEYORS AND MAPPERS, PURSUANT TO FLORIDA STATUTES 472.027.

| BY | DATE | REVISIONS |
|---|---|---|
| AMS | 08/03/20 | REMOVED TOPO ELEVATIONS |

FILE NAME C:\WP8883 sp4-------ACAD\2020\2055


CAULFIELD & WHEELER, INC.
CIVIL ENGINEERING • LAND PLANNING
LANDSCAPE ARCHITECTURE • SURVEYING
7900 GLADES ROAD-SUITE 100
BOCA RATON, FLORIDA 33434
PHONE (561)-392-1991 / FAX (561)-750-1452


SPECIFIC PURPOSE SURVEY
L-12 CANAL

| | |
|---|---|
| DATE | 10/28/20 |
| DRAWN BY | AMS |
| F.B./ PG. | ELEC |
| SCALE | SHOWN |

DAVID P. LINDLEY
REGISTERED LAND SURVEYOR NO. 5005
STATE OF FLORIDA
L.B. 3591

JOB # 8883
SHT.NO. 1
OF 2 SHEETS

# SPECIFIC PURPOSE SURVEY

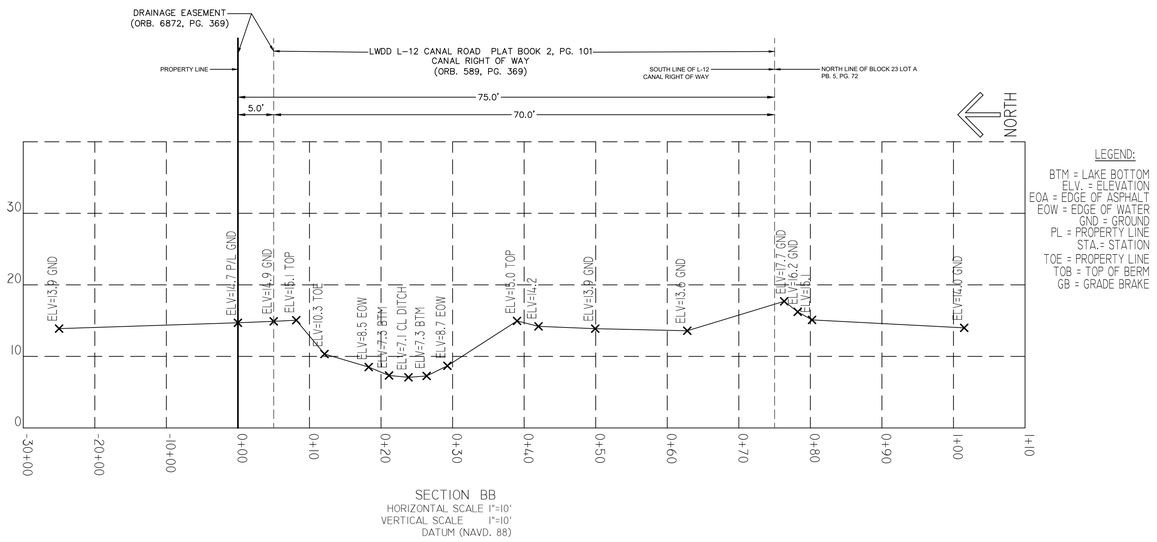


SECTION BB
HORIZONTAL SCALE 1"=10'
VERTICAL SCALE 1"=10'
DATUM (NAVD. 88)

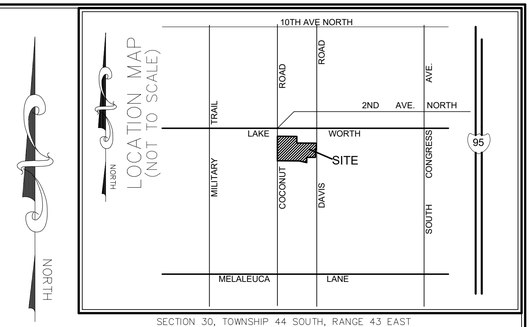


SECTION 30, TOWNSHIP 44 SOUTH, RANGE 43 EAST

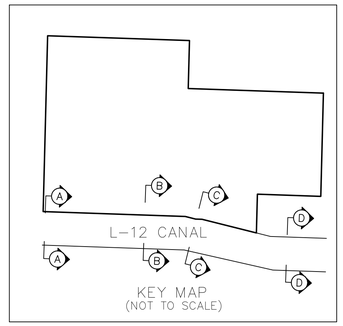


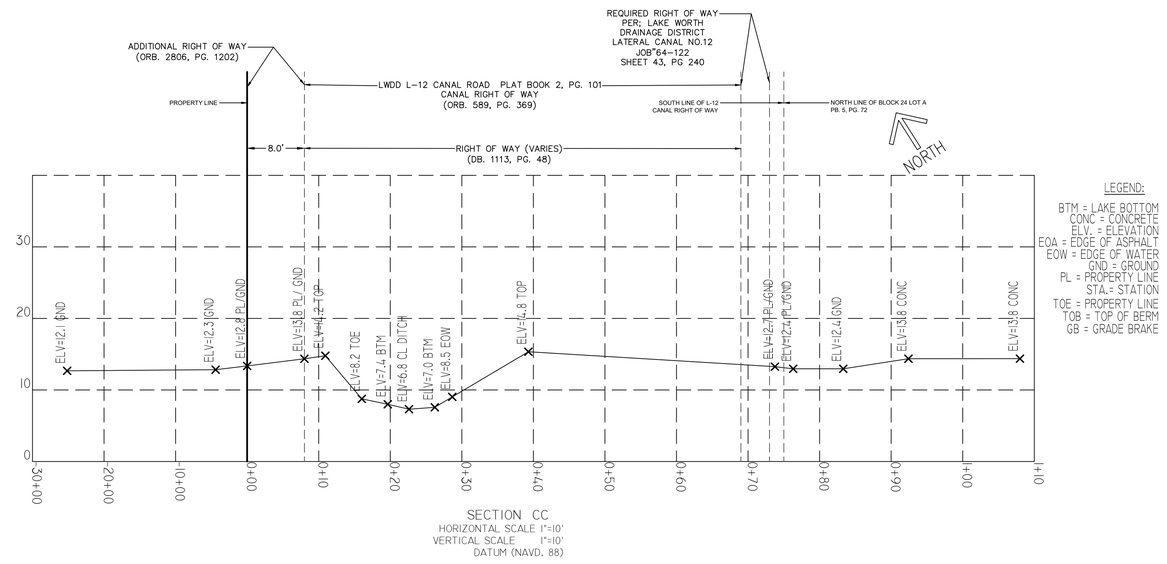


SECTION CC
HORIZONTAL SCALE 1"=10'
VERTICAL SCALE 1"=10'
DATUM (NAVD. 88)

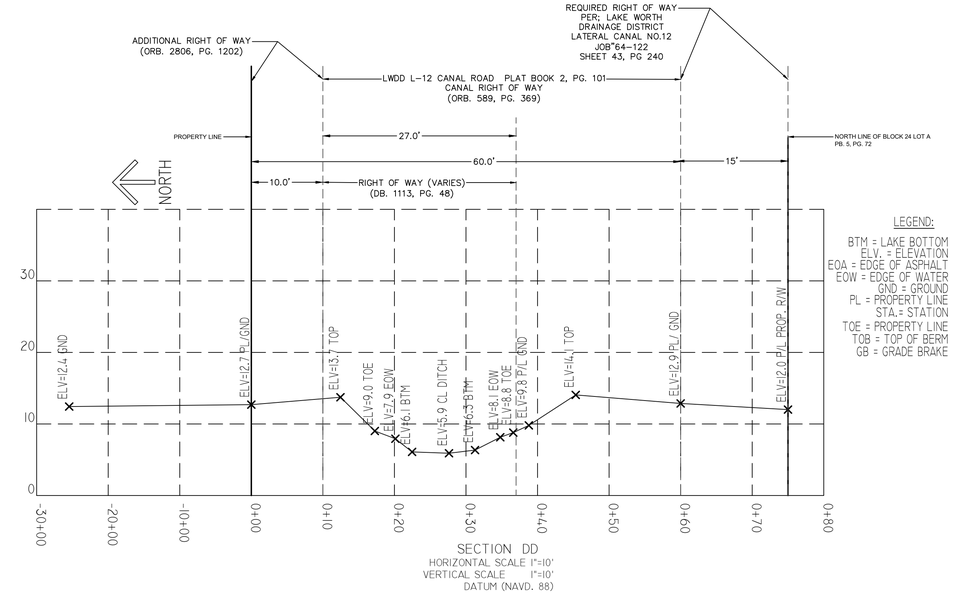


SECTION DD
HORIZONTAL SCALE 1"=10'
VERTICAL SCALE 1"=10'
DATUM (NAVD. 88)

| BY | DATE | REVISIONS |
|---|---|---|
| AMS | 08/03/20 | REMOVED TOPO ELEVATIONS |

FILE NAME C&W#8883 sp4 ------ ACAD#2020205


CAULFIELD & WHEELER, INC.
CIVIL ENGINEERING LAND PLANNING
LANDSCAPE ARCHITECTURE SURVEYING
7900 GLADES ROAD-SUITE 100
BOCA RATON, FLORIDA 33434
PHONE (561)-392-1991 / FAX (561)-750-1452


SPECIFIC PURPOSE SURVEY
L-12 CANAL

| | |
|---|---|
| DATE | 10/28/20 |
| DRAWN BY | AMS |
| F.B./ PG. | ELEC. |
| SCALE | SHOWN |

| | |
|---|---|
| JOB # | 8883 |
| SHT.NO. | 2 |
| | OF 2 SHEETS |

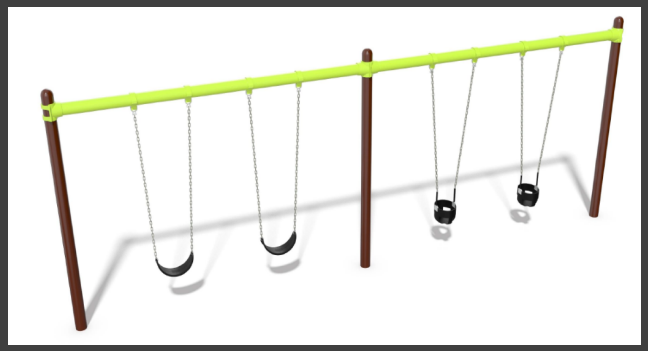

Swing Set

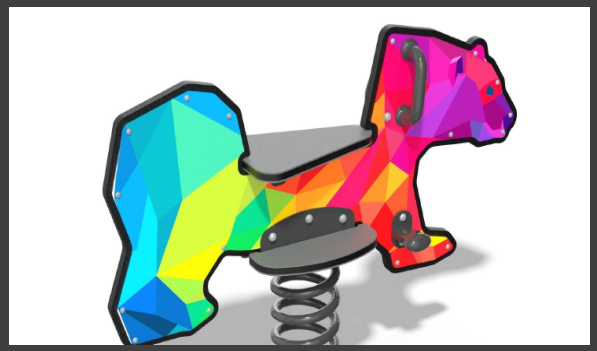

Spring Rider



Spring Rider

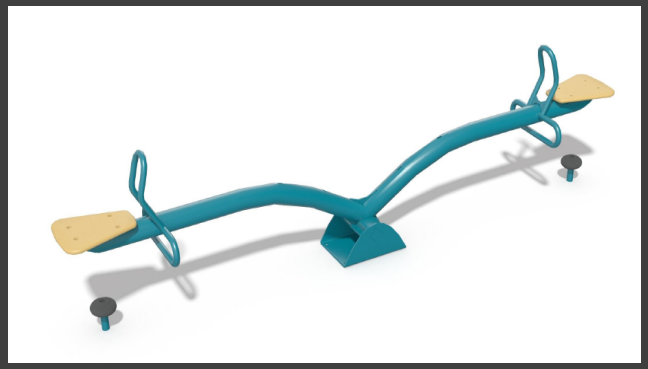

Seesaw

Proposed Playground Equipment

**Plaza Steel Strap 36 Gallon Trash Receptacle**
**w/ Rain Bonnet Lid**
**398-8002**
QTY: 2
Matte Black
SKU# 398-8002



Proposed Site Furnishings



**Plaza Strap Metal Bench w/ Backrest**
QTY: 2
Size: 6'
Matte Black
Surface Mounted
SKU# 398-8000



**10-Bike Double-Sided**
**Grid Bike Rack**
QTY: 1
Powder Coat Black
SKU# 398-6035

Bench, Trash Receptacle, & Bike Rack Typical



Shade Structure



Picnic Table with Trash Receptacle.



Vinyl Fence, Typical. Please see FSBP.1 and Fencing exhibit on RP.2 for height & dimensions.



Sports and Lawn Games Field. Please see Rec Area detail
on sheet RP-2 and Landscape Plans for details.

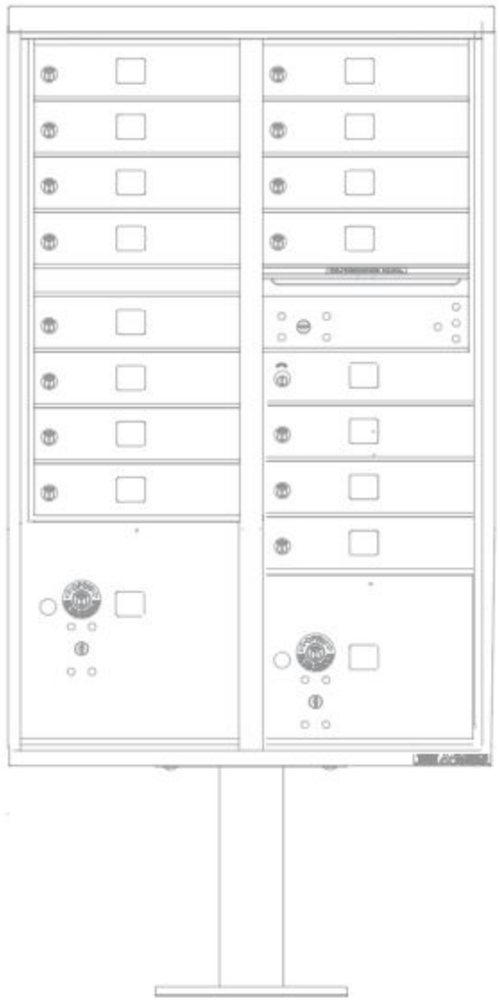

**16 Door Vital Standard - 1570-16**
Qty: 8
2 Parcel Locker/1 Mail Slot
Sequentially Numbered

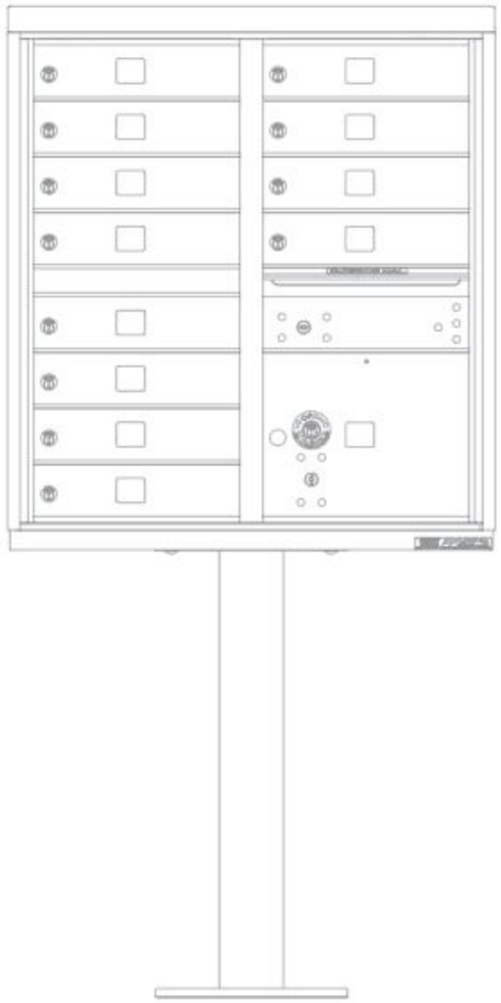

**12 Door Vital Standard - 1570-12**
Qty: 1
1 Parcel Locker/1 Mail Slot
Sequentially Numbered

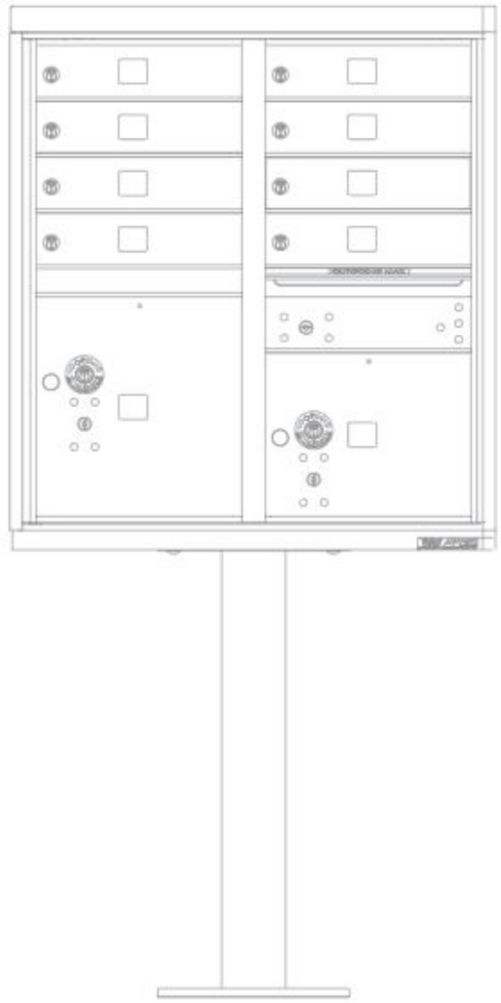

**8 Door Vital Standard - 1570-8**
Qty: 1
2 Parcel Locker/1 Mail Slot
Sequentially Numbered

Black

MEASUREMENTS FOR PAD CALCULATED USING RADIUS TURN REQUIREMENTS AS DEFINED BY USPS CLUSTER BOX DEVELOPERS GUIDE (APPENDIX D G1-2-0 E-E3), ACCESSIBLE ROUTE DEFINED BY AMERICANS WITH DISABILITIES ACT ACCESSIBILITY GUIDELINES FOR BUILDINGS AND FACILITIES (APPENDIX A TO PART 1191 – SECTION 4.3).



ONSIGHT INDUSTRIES LLC
C. SILVEIRA
C. NORCROSS

This document is the property of OnSight Industries, LLC. The information and technology embodied herein shall not be reproduced or copied in whole or in part without previous authorization in writing from OnSight Industries, LLC. 900 Central Park Drive, Sanford, FL 32771 P.407.830.8861 F.407.830.5569 onsightindustries.com

# MAIL KIOSKS (TYP.)



Federal Aviation Administration

« OE/AAA

# Notice Criteria Tool

Notice Criteria Tool - Desk Reference Guide V_2018.2.0

The requirements for filing with the Federal Aviation Administration for proposed structures vary based on a number of factors: height, proximity to an airport, location, and frequencies emitted from the structure, etc. For more details, please reference CFR Title 14 Part 77.9.

You must file with the FAA at least 45 days prior to construction if:

- your structure will exceed 200ft above ground level
- your structure will be in proximity to an airport and will exceed the slope ratio
- your structure involves construction of a traverseway (i.e. highway, railroad, waterway etc...) and once adjusted upward with the appropriate vertical distance would exceed a standard of 77.9(a) or (b)
- your structure will emit frequencies, and does not meet the conditions of the FAA Co-location Policy
- your structure will be in an instrument approach area and might exceed part 77 Subpart C
- your proposed structure will be in proximity to a navigation facility and may impact the assurance of navigation signal reception
- your structure will be on an airport or heliport
- filing has been requested by the FAA

If you require additional information regarding the filing requirements for your structure, please identify and contact the appropriate FAA representative using the Air Traffic Areas of Responsibility map for Off Airport construction, or contact the FAA Airports Region / District Office for On Airport construction.

The tool below will assist in applying Part 77 Notice Criteria.

| | |
|---|---|
| **Latitude:** | 26 Deg 36 M 58.3 S N |
| **Longitude:** | 80 Deg 05 M 54.1 S W |
| **Horizontal Datum:** | NAD83 |
| **Site Elevation (SE):** | 16 (nearest foot) |
| **Structure Height :** | 25 (nearest foot) |
| **Traverseway:** | No Traverseway<br>(Additional height is added to certain structures under 77.9(c))<br>User can increase the default height adjustment for<br>Traverseway, Private Roadway and Waterway |
| **Is structure on airport:** | (•) No<br>( ) Yes |

## Results

You exceed the following Notice Criteria:

Your proposed structure is in proximity to a navigation facility and may impact the assurance of navigation signal reception. The FAA, in accordance with 77.9, requests that you file.

The FAA requests that you file

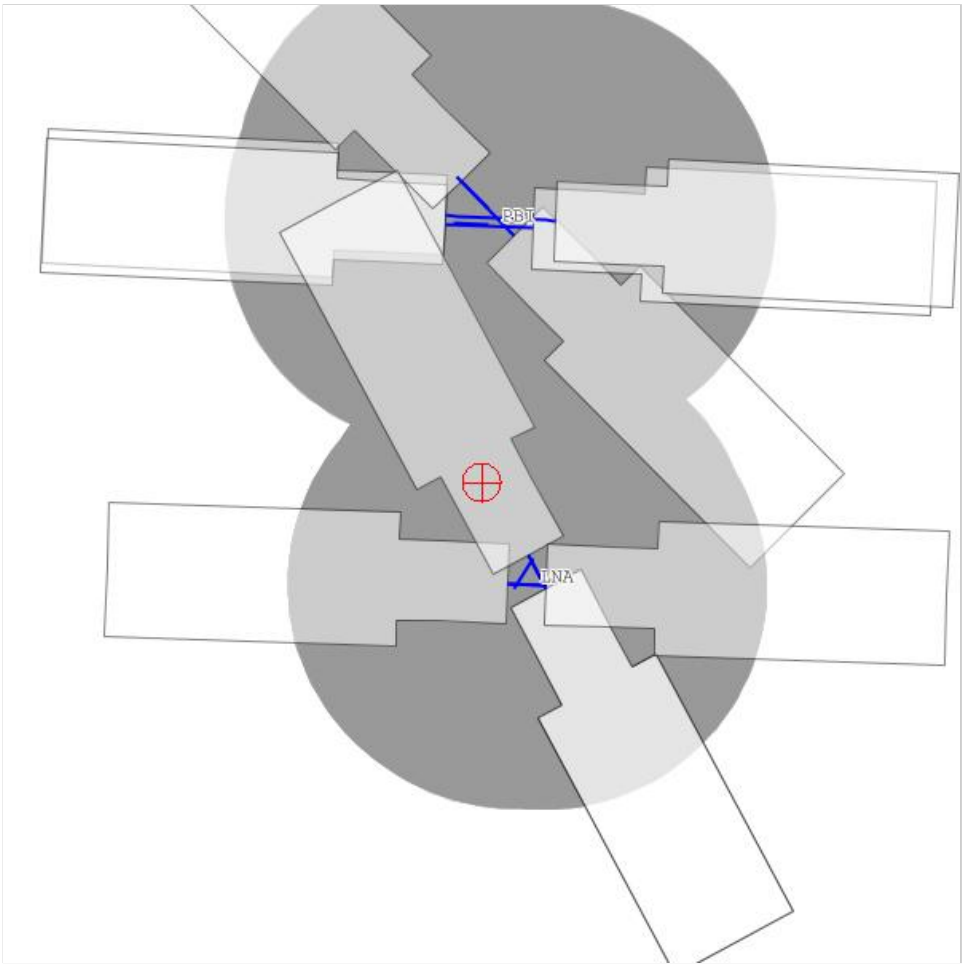
BBT
LNA

Kimley»Horn

December 18, 2020

South Florida Water Management District
3301 Gun Club Rd
West Palm Beach, FL 33406

***RE: Fontana Townhomes***
***Drainage Statement***

To Whom It May Concern,

This project is located in the Village of Palm Springs south of Lake Worth Road and north of LWDD's L-12 canal between Coconut Road and Davis Road. The site is currently permitted under South Florida Water Management District (SFWMD) with a general surface water management permit (permit # 50-02750-S) that was approved in 1992 for the entire C-16 Basin within Lake Worth Drainage District (LWDD). Currently there are no existing LWDD permits for this site as shown in the location map below.

Photo 1: Location Map/Existing LWDD Permits



The site is approximately 4.72 acres is size. The proposed improvements include the construction of new residential townhomes, 0.38 acres of dry detention area (8.05% of the site), 0.31 acres of recreational grassed area (6.57% of the site) and other associated infrastructure.

Stormwater management for quality and quantity control, prior to discharge, is required for the development. Stormwater treatment is per the rules of the South Florida Water Management District (SFWMD), Lake Worth Drainage District (LWDD), and Village of Palm Springs. The discharge design to the LWDD L-12 canal will be based on a pre vs post condition for the 25 year-3 day storm event since this site currently discharges to LWDD. Attached are preliminary calculations for the site for the 10 year – 1 day, 25 year – 3 day and the 100 year – 3 day storm events.

The project will be designed to comply with all South Florida Water Management District, Lake Worth Drainage District and Village of Palm Springs, and other applicable stormwater management requirements.

Please feel free to call me at (561) 330-2345 or mike.spruce@kimley-horn.com with any questions or concerns you might have, or should you require additional information.

Sincerely,

***KIMLEY-HORN AND ASSOCIATES, INC.***

Michael D. Spruce, P.E.
Project Manager, Civil Engineer
FL PE #52776
CA  00000696

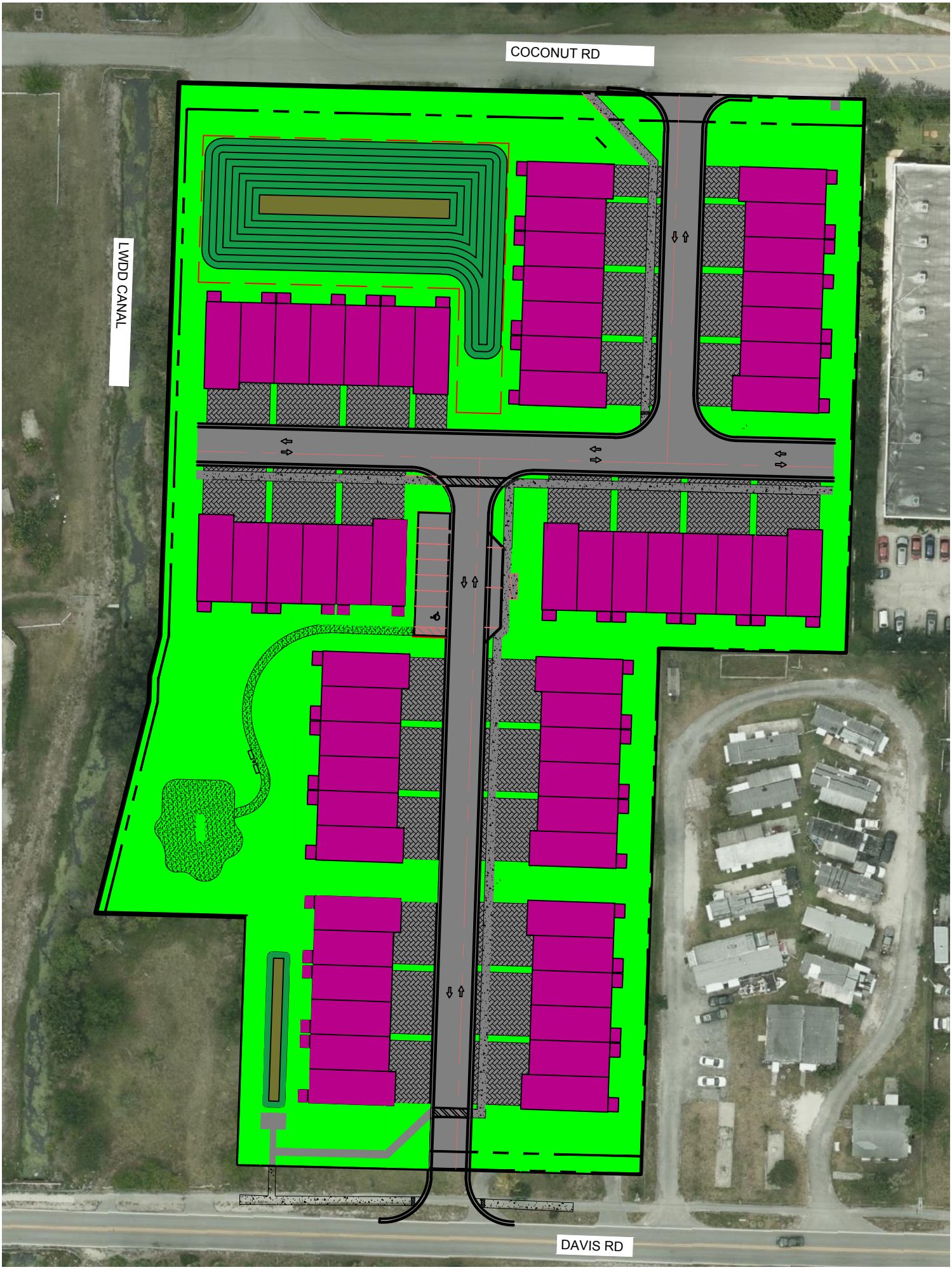
COCONUT RD
LWDD CANAL
DAVIS RD

## Land Use + Soil Storage Calculations

Designed by: YXY
Fontana Townhomes — Checked by: MDS
Project No: 149658011 — Date: 12/16/2020

***Existing Land Use***

| Description | Sub-Area (ac) | Area (ac) |
|---|---|---|
| Impervious Area | | 1.09 |
| Building | 0.15 | |
| Garages | | |
| Asphalt / Sidewalk / Other Imp. | 0.94 | |
| Lake | | 0.00 |
| Lake Surface | | |
| Lake Banks | | |
| Pervious Area | | 3.63 |
| Dry Detention Bottom | | |
| Dry Detention Banks | | |
| Landscaping | 3.63 | |
| Total Area | | 4.72 |

***Proposed Land Use***

| Description | Sub-Area (ac) | Area (ac) |
|---|---|---|
| Impervious Area | | 2.64 |
| Building | 1.34 | |
| Garages | | |
| Asphalt / Sidewalk / Other Imp. | 1.30 | |
| Lake | | 0.00 |
| Lake Surface | | |
| Lake Banks | | |
| Pervious Area | | 2.08 |
| Dry Detention Bottom | 0.04 | |
| Dry Detention Banks | 0.31 | |
| Landscaping | 1.73 | |
| Total Area | | 4.72 |

## Land Use + Soil Storage Calculations

Designed by: YXY
Fontana Townhomes — Checked by: MDS
Project No: 149658011 — Date: 12/16/2020

### *Soil Storage*

| | Existing | Proposed | DATUM |
|---|---|---|---|
| Wet Season Water Table / Control Elevation | 7.00 | 7.00 | NAVD 1988 |
| Soil Storage Capability (Coastal, Flatwoods, Depressional) | Flatwoods | Flatwoods | |
| Average Site Elevation (Dry Detention Bottom) | | 8.00 | NAVD 1988 |
| Average Depth to Water Table (Dry Detention Bottom) | | 1.00 | ft |
| Soil Storage Capability (Flatwoods, w/ 25% reduction) | | 0.45 | in |
| Soil Storage (S) Over the Site (Dry Detention Bottom) | | 0.03 | in |
| Average Site Elevation (Dry Detention Banks) | | 11.00 | NAVD 1988 |
| Average Depth to Water Table (Proposed Land Use) | | 4.00 | ft |
| Soil Storage Capability (Flatwoods, w/ 25% reduction) | | 6.75 | in |
| Soil Storage (S) Over the Site (Proposed Land Use) | | 0.03 | in |
| Average Site Elevation (Landscaping) | 12.50 | 14.00 | NAVD 1988 |
| Average Depth to Water Table (Landscaping) | 5.50 | 7.00 | ft |
| Soil Storage Capability (Flatwoods, w/ 25% reduction) | 6.75 | 6.75 | in |
| Soil Storage (S) Over the Site (Landscaping) | 5.19 | 2.47 | in |
| Soil Storage (S) Over the Site (Entire Site) | **5.19** | **2.54** | in |
| Curve Number (CN) Based on Soil Storage (S) | 65.8 | 79.7 | |

# Site Stage-Storage - Existing

Fontana Townhomes
Project No: 149658011

YXY
12/16/2020

| | |
|---|---|
| Stage Step Interval: | 1 |
| Start Stage Elevation: | 7.00 |

| Storage Type | Impervious Area | Lake Surface | Lake Banks | Dry Detention Bottom | Dry Detention Banks | Landscaping | Total |
|---|---|---|---|---|---|---|---|
| | L | V | L | V | L | L | Area |
| Area (ac) | 0.936 | 0.000 | 0.000 | 0.000 | 0.000 | 3.628 | 4.564 |
| Avg Low Elev. | 14.00 | | | | | 11.00 | |
| Avg High Elev. | 15.00 | | | | | 14.00 | |

| Stage | Impervious Area | Lake Surface | Lake Banks | Dry Detention Bottom | Dry Detention Banks | Landscaping | TOTAL CUM, AC-FT |
|---|---|---|---|---|---|---|---|
| **7.00** | 0.000 | 0.000 | 0.000 | 0.000 | 0.000 | 0.000 | **0.000** |
| **8.00** | 0.000 | 0.000 | 0.000 | 0.000 | 0.000 | 0.000 | **0.000** |
| **9.00** | 0.000 | 0.000 | 0.000 | 0.000 | 0.000 | 0.000 | **0.000** |
| **10.00** | 0.000 | 0.000 | 0.000 | 0.000 | 0.000 | 0.000 | **0.000** |
| **11.00** | 0.000 | 0.000 | 0.000 | 0.000 | 0.000 | 0.000 | **0.000** |
| **12.00** | 0.000 | 0.000 | 0.000 | 0.000 | 0.000 | 0.605 | **0.605** |
| **13.00** | 0.000 | 0.000 | 0.000 | 0.000 | 0.000 | 2.419 | **2.419** |
| **14.00** | 0.000 | 0.000 | 0.000 | 0.000 | 0.000 | 5.443 | **5.443** |
| **15.00** | 0.468 | 0.000 | 0.000 | 0.000 | 0.000 | 9.071 | **9.539** |
| **16.00** | 1.403 | 0.000 | 0.000 | 0.000 | 0.000 | 12.699 | **14.103** |
| **17.00** | 2.339 | 0.000 | 0.000 | 0.000 | 0.000 | 16.328 | **18.667** |
| **18.00** | 3.274 | 0.000 | 0.000 | 0.000 | 0.000 | 19.956 | **23.230** |
| **19.00** | 4.210 | 0.000 | 0.000 | 0.000 | 0.000 | 23.585 | **27.794** |
| **20.00** | 5.145 | 0.000 | 0.000 | 0.000 | 0.000 | 27.213 | **32.358** |
| **21.00** | 6.081 | 0.000 | 0.000 | 0.000 | 0.000 | 30.841 | **36.922** |
| **22.00** | 7.016 | 0.000 | 0.000 | 0.000 | 0.000 | 34.470 | **41.486** |

## Water Quality Calculations - Existing

Designed by: YXY
Fontana Townhomes — Checked by: MDS
Project No: 149658011 — Date: 12/16/2020

**I. LAND USE:**

| | | | | |
|---|---|---|---|---|
| 1 | Building | 0.15 | ac. | 3.25% |
| 2 | Garages | 0.00 | ac. | 0.00% |
| 3 | Asphalt / Sidewalk / Other Imp. | 0.94 | ac. | 19.83% |
| 4 | Lake Surface | 0.00 | ac. | 0.00% |
| 5 | Lake Banks | 0.00 | ac. | 0.00% |
| 6 | Dry Detention Bottom | 0.00 | ac. | 0.00% |
| 7 | Dry Detention Banks | 0.00 | ac. | 0.00% |
| 8 | Landscaping | 3.63 | ac. | 76.92% |
| | **Total =** | **4.72** | **ac.** | **100%** |

**Total overall impervious surface with building = 23.08%**

**II. WATER QUALITY CRITERIA:**

Quality standards shall be provided during a 3 year, 1 hour storm event for one of the following three combinations:

1. If a wet detention system, then whichever is the greater of the following:
   a. The first inch of runoff from the entire project site.
   b. The amount of 2.5 inches times the percent impervious for the project site.
2. Exfiltration trench requires the volume required for the wet detention system.

**III. WATER QUALITY COMPUTATIONS:**

1. Compute the first inch of runoff from the entire developed project site:
   = 1.00 inch X 4.72 acres X ( 1 foot / 12 inches )
   = **0.393 ac-ft for the first inch of runoff**

2. Compute 2.5 inches times the percent impervious for the developed project site:
   a. Site area for water quality pervious / impervious calculations only:
      = Total Project - ( Lake Area + Buildings)
      = 4.72 acres - ( 0.00 acres + 0.15 acres)
      = **4.56 acres of site area for water quality calculations**

   b. Impervious area for water quality pervious / impervious calculations only:
      = Site area for water quality - Pervious area
      = 4.56 acres - 3.63 acres
      = **0.94 acres of impervious area for water quality calculations**

   c. Percentage of impervious area for water quality:
      = Impervious area for water quality / Site area for water quality x 100%
      = 0.94 acres / 4.564 acres x 100%
      = **20.50 % Impervious**

   d. For 2.5 inches times the percentage of impervious area:
      = 2.5 inches X 20.50 %
      = **0.51 inches to be treated**

   e. Compute volume required for quality detention:
      = Inches to be treated X ( Total Site Area - Lake Area )
      = 0.51 inches X ( 4.72 acres - 0.000 acres ) x ( 1 foot / 12 inches )
      = **0.20 ac-ft required for detention storage**

3. The first inch of runoff from the entire developed site = 0.393 ac-ft
   2.5 inches times the percentage of impervious area = 0.201 ac-ft

**The volume of 0.393 ac-ft controls**

## TR-55 Volume Calculations - Existing

Designed by: YXY
Fontana Townhomes — Checked by: MDS
Project No: 149658011 — Date: 12/16/2020

***Existing Land Use***

| | 10 year/24 hours | 25-year /72 hours | 100-year /72 hours |
|---|---|---|---|
| Potential Maximum Retention (S) (in) | 5.19 | 5.19 | 5.19 |
| Rainfall (P) (in) | 7.8 | 12.5 | 16 |
| Total Site Drainage Area (A) (ac) | 4.72 | 4.72 | 4.72 |
| Runoff (Q) (in) | 3.82 | 7.89 | 11.11 |
| Volume of Runoff ($V_r$) (ac-ft) | 1.50 | 3.10 | 4.37 |

***Stage - Storage Existing***

| Stage (elev., ft) | Site Storage (ac-ft) | | | |
|---|---|---|---|---|
| 7.00 | 0.000 | | | |
| 8.00 | 0.000 | | | |
| 9.00 | 0.000 | | | |
| 10.00 | 0.000 | | | |
| 11.00 | 0.000 | | | |
| 12.00 | 0.605 | | | |
| 13.00 | 2.419 | | | |
| 14.00 | 5.443 | | | |
| 15.00 | 9.539 | | | |

***Summary Stages***

| | Existing Stage (ft) | Criteria |
|---|---|---|
| 10 year/24 hours | 11.47 | Min. Road Crown |
| 25-year /72 hours | 11.51 | Min. Perim. Berm |
| 100-year /72 hours (No Discharge) | 13.64 | Min. Finished Floor |

Equations Used (from Technical Release 55)

$S = (1000/CN)-10$

$Q = (P_{25} - 0.2S)^2 / (P_{25} + 0.8S)$

$V_r$ (ac-ft) = (Q)(A)/12

# Site Stage-Storage - Proposed

Fontana Townhomes
Project No: 149658011

YXY
12/16/2020

| | |
|---|---|
| Stage Step Interval: | 1 |
| Start Stage Elevation: | 7.00 |

| Storage Type | Impervious Area | Lake Surface | Lake Banks | Dry Detention Bottom | Dry Detention Banks | Landscaping | Total |
|---|---|---|---|---|---|---|---|
| | L | V | L | V | L | L | Area |
| Area (ac) | 1.300 | 0.000 | 0.000 | 0.040 | 0.310 | 1.730 | 3.380 |
| Avg Low Elev. | 13.90 | | | 8.00 | 8.00 | 14.00 | |
| Avg High Elev. | 16.00 | | | | 14.00 | 15.65 | |

| | | | | | | | TOTAL |
|---|---|---|---|---|---|---|---|
| Stage | Impervious Area | Lake Surface | Lake Banks | Dry Detention Bottom | Dry Detention Banks | Landscaping | CUM, AC-FT |
| **7.00** | 0.000 | 0.000 | 0.000 | 0.000 | 0.000 | 0.000 | **0.000** |
| **8.00** | 0.000 | 0.000 | 0.000 | 0.000 | 0.000 | 0.000 | **0.000** |
| **9.00** | 0.000 | 0.000 | 0.000 | 0.040 | 0.026 | 0.000 | **0.066** |
| **10.00** | 0.000 | 0.000 | 0.000 | 0.080 | 0.103 | 0.000 | **0.183** |
| **11.00** | 0.000 | 0.000 | 0.000 | 0.120 | 0.233 | 0.000 | **0.353** |
| **12.00** | 0.000 | 0.000 | 0.000 | 0.160 | 0.413 | 0.000 | **0.573** |
| **13.00** | 0.000 | 0.000 | 0.000 | 0.200 | 0.646 | 0.000 | **0.846** |
| **14.00** | 0.003 | 0.000 | 0.000 | 0.240 | 0.930 | 0.000 | **1.173** |
| **15.00** | 0.375 | 0.000 | 0.000 | 0.280 | 1.240 | 0.524 | **2.419** |
| **16.00** | 1.365 | 0.000 | 0.000 | 0.320 | 1.550 | 2.033 | **5.268** |
| **17.00** | 2.665 | 0.000 | 0.000 | 0.360 | 1.860 | 3.763 | **8.648** |
| **18.00** | 3.965 | 0.000 | 0.000 | 0.400 | 2.170 | 5.493 | **12.028** |
| **19.00** | 5.265 | 0.000 | 0.000 | 0.440 | 2.480 | 7.223 | **15.408** |
| **20.00** | 6.565 | 0.000 | 0.000 | 0.480 | 2.790 | 8.953 | **18.788** |
| **21.00** | 7.865 | 0.000 | 0.000 | 0.520 | 3.100 | 10.683 | **22.168** |
| **22.00** | 9.165 | 0.000 | 0.000 | 0.560 | 3.410 | 12.413 | **25.548** |

## Water Quality Calculations - Proposed

Designed by: YXY
Fontana Townhomes — Checked by: MDS
Project No: 149658011 — Date: 12/16/2020

**I. LAND USE:**

| | | | | |
|---|---|---|---|---|
| 1 | Building | 1.34 | ac. | 28.39% |
| 2 | Garages | 0.00 | ac. | 0.00% |
| 3 | Asphalt / Sidewalk / Other Imp. | 1.30 | ac. | 27.54% |
| 4 | Lake Surface | 0.00 | ac. | 0.00% |
| 5 | Lake Banks | 0.00 | ac. | 0.00% |
| 6 | Dry Detention Bottom | 0.04 | ac. | 0.85% |
| 7 | Dry Detention Banks | 0.31 | ac. | 6.57% |
| 8 | Landscaping | 1.73 | ac. | 36.65% |
| | **Total =** | **4.72** | **ac.** | **100%** |

**Total overall impervious surface with building = 55.93%**

**II. WATER QUALITY CRITERIA:**

Quality standards shall be provided during a 3 year, 1 hour storm event for one of the following three combinations:

1. If a wet detention system, then whichever is the greater of the following:
   a. The first inch of runoff from the entire project site.
   b. The amount of 2.5 inches times the percent impervious for the project site.
2. Exfiltration trench requires the volume required for the wet detention system.

**III. WATER QUALITY COMPUTATIONS:**

1. Compute the first inch of runoff from the entire developed project site:
   = 1.00 inch X 4.72 acres X ( 1 foot / 12 inches )
   = **0.393 ac-ft for the first inch of runoff**

2. Compute 2.5 inches times the percent impervious for the developed project site:
   a. Site area for water quality pervious / impervious calculations only:
      = Total Project - ( Lake Area + Buildings)
      = 4.72 acres - ( 0.00 acres + 1.34 acres)
      = **3.38 acres of site area for water quality calculations**

   b. Impervious area for water quality pervious / impervious calculations only:
      = Site area for water quality - Pervious area
      = 3.38 acres - 2.08 acres
      = **1.30 acres of impervious area for water quality calculations**

   c. Percentage of impervious area for water quality:
      = Impervious area for water quality / Site area for water quality x 100%
      = 1.30 acres / 3.380 acres x 100%
      = **38.46 % Impervious**

   d. For 2.5 inches times the percentage of impervious area:
      = 2.5 inches X 38.46 %
      = **0.96 inches to be treated**

   e. Compute volume required for quality detention:
      = Inches to be treated X ( Total Site Area - Lake Area )
      = 0.96 inches X ( 4.72 acres - 0.000 acres ) x ( 1 foot / 12 inches )
      = **0.38 ac-ft required for detention storage**

3. The first inch of runoff from the entire developed site = 0.393 ac-ft
   2.5 inches times the percentage of impervious area = 0.378 ac-ft

**The volume of 0.393 ac-ft controls**

## TR-55 Volume Calculations - Proposed

Designed by: YXY
Checked by: MDS
Date: 12/16/2020

Fontana Townhomes
Project No: 149658011

***Volume Required***

| | 10 year/24 hours | 25-year /72 hours | 100-year /72 hours |
|---|---|---|---|
| Potential Maximum Retention (S) (in) | 2.54 | 2.54 | 2.54 |
| Rainfall (P) (in) | 7.8 | 12.5 | 16 |
| Total Site Drainage Area (A) (ac) | 4.72 | 4.72 | 4.72 |
| Runoff (Q) (in) | 5.408 | 9.895 | 13.309 |
| Volume of Runoff ($V_r$) (ac-ft) | 2.127 | 3.892 | 5.235 |

***Stage - Storage Proposed***

| Stage (elev., ft) | Site Storage (ac-ft) | | | |
|---|---|---|---|---|
| 7.00 | 0.00 | | | |
| 8.00 | 0.00 | | | |
| 9.00 | 0.07 | | | |
| 10.00 | 0.18 | | | |
| 11.00 | 0.35 | | | |
| 12.00 | 0.57 | | | |
| 13.00 | 0.85 | | | |
| 14.00 | 1.17 | | | |
| 15.00 | 2.42 | | | |
| 16.00 | 5.27 | | | |
| 17.00 | 8.65 | | | |
| 18.00 | 12.03 | | | |

***Summary Quality***

| | |
|---|---|
| *Required Min Water Quality to Meet:* | 0.393 ac-ft |
| *Water Quality Volume Met at Stage:* | 11.18 ft |

***Summary Stages***

| | Proposed Stage (ft) | Existing Stage (ft) | Criteria |
|---|---|---|---|
| 10 year/24 hours | 13.34 | 11.47 | Min. Road Crown |
| 25-year /72 hours | 14.01 | 11.51 | Min. Perim. Berm |
| 100-year /72 hours (No Discharge) | 15.99 | 13.64 | Min. Finished Floor |

***Summary Discharges***

| | Proposed Discharge (cfs) *from modeling* | Existing Discharge (cfs) *from modeling* | | |
|---|---|---|---|---|
| 25-year/72 hours | 14.18 | 34.27 | | |

Equations Used (from Technical Release 55)

$S = (1000/CN)-10$

$Q = (P_{25} - 0.2S)^2 / (P_{25} + 0.8S)$

$V_r$ (ac-ft) = (Q)(A)/12

## Summary

Designed by: YXY
Fontana Townhomes — Checked by: MDS
Project No: 149658011 — Date: 12/16/2020

***Stage Summary***

| Design Storm | Proposed Stage (ft) | Existing Stage (ft) | Criteria |
|---|---|---|---|
| 10 year/24 hours | 13.34 | 11.47 | Min. Road Crown |
| 25-year /72 hours | 14.01 | 11.51 | Min. Perim. Berm |
| 100-year /72 hours (No Discharge) | 15.99 | 13.64 | Min. Finished Floor |

***Finished Floor Elev. Summary***

| Criteria | Min. FF Elev. |
|---|---|
| FEMA Flood Map - ZONE AE | 13.00 |
| ASCE/SEI 24-05 (Cat III, BFE + 1') | 14.00 |
| Design 100-year/3-day (No Disch) Elev | 15.99 |
| Governing Finish Floor Elevation | 15.99 |

***Quality Summary***

| | | |
|---|---|---|
| Required Min Water Quality to Meet: | 0.393 ac-ft controls | |
| Water Quality Volume Met at Stage: | 11.18 ft | |
| Quality Provided Through Exfiltration: | 0 ac-ft | |
| Exfiltration Trench Used: | 0 ft | |
| Exfiltration Trench Dimensions: | Width (ft) = 0.00 | Depth (ft) = 0.00 |

***Discharges Summary***

| | Proposed Discharge (cfs) *from modeling* | Existing Discharge (cfs) *from modeling* | | |
|---|---|---|---|---|
| 25-year/72 hours | 14.18 | 34.27 | | |

Project Name: Fontana Townhomes
Reviewer: Michael D. Spruce, P.E.
Project Number: 149658011
  Period  Begin: Jan 01, 2000;0000 hr  End: Jan 04, 2000;1800 hr  Duration: 90 hr
  Time Step: 0.2 hr,  Iterations: 10

Basin 1: Onsite

  Method: Santa Barbara Unit Hydrograph
  Rainfall Distribution: SFWMD - 24 hr
  Design Frequency: 10 year
  1 Day Rainfall: 7.8 inches
  Area: 4.72 acres
  Ground Storage: 2.57 inches
  Time of Concentration: 0.16 hours
  Initial Stage: 7 ft NGVD

| Stage (ft NGVD) | Storage (acre-ft) |
|---|---|
| 7.00 | 0.00 |
| 8.00 | 0.00 |
| 9.00 | 0.07 |
| 10.00 | 0.18 |
| 11.00 | 0.35 |
| 12.00 | 0.57 |
| 13.00 | 0.85 |
| 14.00 | 1.17 |
| 15.00 | 2.42 |
| 16.00 | 5.27 |
| 17.00 | 8.65 |

Offsite Receiving Body: Offsite1

| Time (hr) | Stage (ft NGVD) |
|---|---|
| 0.00 | 7.00 |
| 90.00 | 7.00 |

Structure: 1

  From Basin: Onsite
  To Basin: Offsite1
  Structure Type: Gravity
    Weir: Sharp Crested,  Crest Elev = 13 ft NGVD,  Length = 4 ft
    Bleeder: Inv-Tri,  Invert Elev = 7 ft NGVD,  Height = 0.5 ft
      Width = 0.5 ft
      Default Coefs: Weir Coef = 2.5,  Orifice Coef = 0.6
    Pipe: Diameter = 2 ft,  Manning's n = 0.013,  Length = 51 ft
      US Invert Elev = 7 ft NGVD,  DS Invert Elev = 7 ft NGVD,  flap gate

| Time (hr) | Cumulative Rainfall (in) | Instant Runoff (cfs) | Current Discharge (cfs) | Cumulative Discharge (acre-ft) | Head Water Stage (ft NGVD) | Tail Water Stage (ft NGVD) |
|---|---|---|---|---|---|---|
| 0.00 | 0.00 | 0.00 | 0.00 | 0.00 | 7.00 | 7.00 |
| 1.00 | 0.08 | 0.00 | 0.00 | 0.00 | 7.00 | 7.00 |
| 2.00 | 0.16 | 0.00 | 0.00 | 0.00 | 7.00 | 7.00 |
| 3.00 | 0.25 | 0.00 | 0.00 | 0.00 | 7.00 | 7.00 |
| 4.00 | 0.35 | 0.00 | 0.00 | 0.00 | 7.00 | 7.00 |
| 5.00 | 0.48 | 0.00 | 0.00 | 0.00 | 7.00 | 7.00 |
| 6.00 | 0.65 | 0.06 | 0.00 | 0.00 | 8.02 | 7.00 |
| 7.00 | 0.84 | 0.19 | 0.00 | 0.01 | 8.05 | 7.00 |
| 8.00 | 1.07 | 0.34 | 0.51 | 0.03 | 8.07 | 7.00 |
| 9.00 | 1.33 | 0.54 | 0.53 | 0.07 | 8.10 | 7.00 |
| 10.00 | 1.66 | 0.82 | 0.58 | 0.11 | 8.27 | 7.00 |
| 11.00 | 2.10 | 1.41 | 0.73 | 0.17 | 8.79 | 7.00 |
| 12.00 | 5.12 | 19.80 | 1.33 | 0.25 | 12.20 | 7.00 |
| 13.00 | 5.98 | 2.67 | 3.41 | 0.51 | 13.29 | 7.00 |
| 14.00 | 6.38 | 1.57 | 1.97 | 0.71 | 13.12 | 7.00 |
| 15.00 | 6.63 | 1.02 | 1.43 | 0.84 | 13.00 | 7.00 |

| Time (hr) | Cumulative Rainfall (in) | Instant Runoff (cfs) | Current Discharge (cfs) | Cumulative Discharge (acre-ft) | Head Water Stage (ft NGVD) | Tail Water Stage (ft NGVD) |
|---|---|---|---|---|---|---|
| 16.00 | 6.86 | 1.02 | 1.42 | 0.96 | 12.88 | 7.00 |
| 17.00 | 7.00 | 0.61 | 1.39 | 1.07 | 12.67 | 7.00 |
| 18.00 | 7.14 | 0.62 | 1.36 | 1.19 | 12.44 | 7.00 |
| 19.00 | 7.29 | 0.62 | 1.33 | 1.30 | 12.23 | 7.00 |
| 20.00 | 7.43 | 0.62 | 1.30 | 1.41 | 12.02 | 7.00 |
| 21.00 | 7.52 | 0.41 | 1.26 | 1.51 | 11.72 | 7.00 |
| 22.00 | 7.61 | 0.41 | 1.21 | 1.61 | 11.41 | 7.00 |
| 23.00 | 7.71 | 0.41 | 1.17 | 1.71 | 11.11 | 7.00 |
| 24.00 | 7.80 | 0.41 | 1.12 | 1.81 | 10.79 | 7.00 |
| 25.00 | 7.80 | 0.00 | 1.04 | 1.90 | 10.30 | 7.00 |
| 26.00 | 7.80 | 0.00 | 0.93 | 1.98 | 9.73 | 7.00 |
| 27.00 | 7.80 | 0.00 | 0.79 | 2.05 | 9.08 | 7.00 |
| 28.00 | 7.80 | 0.00 | 0.59 | 2.10 | 8.30 | 7.00 |
| 29.00 | 7.80 | 0.00 | 0.00 | 2.12 | 7.00 | 7.00 |
| 30.00 | 7.80 | 0.00 | 0.00 | 2.12 | 7.00 | 7.00 |
| 31.00 | 7.80 | 0.00 | 0.00 | 2.12 | 7.00 | 7.00 |
| 32.00 | 7.80 | 0.00 | 0.00 | 2.12 | 7.00 | 7.00 |
| 33.00 | 7.80 | 0.00 | 0.00 | 2.12 | 7.00 | 7.00 |
| 34.00 | 7.80 | 0.00 | 0.00 | 2.12 | 7.00 | 7.00 |
| 35.00 | 7.80 | 0.00 | 0.00 | 2.12 | 7.00 | 7.00 |
| 36.00 | 7.80 | 0.00 | 0.00 | 2.12 | 7.00 | 7.00 |
| 37.00 | 7.80 | 0.00 | 0.00 | 2.12 | 7.00 | 7.00 |
| 38.00 | 7.80 | 0.00 | 0.00 | 2.12 | 7.00 | 7.00 |
| 39.00 | 7.80 | 0.00 | 0.00 | 2.12 | 7.00 | 7.00 |
| 40.00 | 7.80 | 0.00 | 0.00 | 2.12 | 7.00 | 7.00 |
| 41.00 | 7.80 | 0.00 | 0.00 | 2.12 | 7.00 | 7.00 |
| 42.00 | 7.80 | 0.00 | 0.00 | 2.12 | 7.00 | 7.00 |
| 43.00 | 7.80 | 0.00 | 0.00 | 2.12 | 7.00 | 7.00 |
| 44.00 | 7.80 | 0.00 | 0.00 | 2.12 | 7.00 | 7.00 |
| 45.00 | 7.80 | 0.00 | 0.00 | 2.12 | 7.00 | 7.00 |
| 46.00 | 7.80 | 0.00 | 0.00 | 2.12 | 7.00 | 7.00 |
| 47.00 | 7.80 | 0.00 | 0.00 | 2.12 | 7.00 | 7.00 |
| 48.00 | 7.80 | 0.00 | 0.00 | 2.12 | 7.00 | 7.00 |
| 49.00 | 7.80 | 0.00 | 0.00 | 2.12 | 7.00 | 7.00 |
| 50.00 | 7.80 | 0.00 | 0.00 | 2.12 | 7.00 | 7.00 |
| 51.00 | 7.80 | 0.00 | 0.00 | 2.12 | 7.00 | 7.00 |
| 52.00 | 7.80 | 0.00 | 0.00 | 2.12 | 7.00 | 7.00 |
| 53.00 | 7.80 | 0.00 | 0.00 | 2.12 | 7.00 | 7.00 |
| 54.00 | 7.80 | 0.00 | 0.00 | 2.12 | 7.00 | 7.00 |
| 55.00 | 7.80 | 0.00 | 0.00 | 2.12 | 7.00 | 7.00 |
| 56.00 | 7.80 | 0.00 | 0.00 | 2.12 | 7.00 | 7.00 |
| 57.00 | 7.80 | 0.00 | 0.00 | 2.12 | 7.00 | 7.00 |
| 58.00 | 7.80 | 0.00 | 0.00 | 2.12 | 7.00 | 7.00 |
| 59.00 | 7.80 | 0.00 | 0.00 | 2.12 | 7.00 | 7.00 |
| 60.00 | 7.80 | 0.00 | 0.00 | 2.12 | 7.00 | 7.00 |
| 61.00 | 7.80 | 0.00 | 0.00 | 2.12 | 7.00 | 7.00 |
| 62.00 | 7.80 | 0.00 | 0.00 | 2.12 | 7.00 | 7.00 |
| 63.00 | 7.80 | 0.00 | 0.00 | 2.12 | 7.00 | 7.00 |
| 64.00 | 7.80 | 0.00 | 0.00 | 2.12 | 7.00 | 7.00 |
| 65.00 | 7.80 | 0.00 | 0.00 | 2.12 | 7.00 | 7.00 |
| 66.00 | 7.80 | 0.00 | 0.00 | 2.12 | 7.00 | 7.00 |
| 67.00 | 7.80 | 0.00 | 0.00 | 2.12 | 7.00 | 7.00 |
| 68.00 | 7.80 | 0.00 | 0.00 | 2.12 | 7.00 | 7.00 |
| 69.00 | 7.80 | 0.00 | 0.00 | 2.12 | 7.00 | 7.00 |
| 70.00 | 7.80 | 0.00 | 0.00 | 2.12 | 7.00 | 7.00 |
| 71.00 | 7.80 | 0.00 | 0.00 | 2.12 | 7.00 | 7.00 |
| 72.00 | 7.80 | 0.00 | 0.00 | 2.12 | 7.00 | 7.00 |
| 73.00 | 7.80 | 0.00 | 0.00 | 2.12 | 7.00 | 7.00 |
| 74.00 | 7.80 | 0.00 | 0.00 | 2.12 | 7.00 | 7.00 |
| 75.00 | 7.80 | 0.00 | 0.00 | 2.12 | 7.00 | 7.00 |
| 76.00 | 7.80 | 0.00 | 0.00 | 2.12 | 7.00 | 7.00 |
| 77.00 | 7.80 | 0.00 | 0.00 | 2.12 | 7.00 | 7.00 |
| 78.00 | 7.80 | 0.00 | 0.00 | 2.12 | 7.00 | 7.00 |
| 79.00 | 7.80 | 0.00 | 0.00 | 2.12 | 7.00 | 7.00 |
| 80.00 | 7.80 | 0.00 | 0.00 | 2.12 | 7.00 | 7.00 |
| 81.00 | 7.80 | 0.00 | 0.00 | 2.12 | 7.00 | 7.00 |
| 82.00 | 7.80 | 0.00 | 0.00 | 2.12 | 7.00 | 7.00 |
| 83.00 | 7.80 | 0.00 | 0.00 | 2.12 | 7.00 | 7.00 |
| 84.00 | 7.80 | 0.00 | 0.00 | 2.12 | 7.00 | 7.00 |
| 85.00 | 7.80 | 0.00 | 0.00 | 2.12 | 7.00 | 7.00 |
| 86.00 | 7.80 | 0.00 | 0.00 | 2.12 | 7.00 | 7.00 |

| Time (hr) | Cumulative Rainfall (in) | Instant Runoff (cfs) | Current Discharge (cfs) | Cumulative Discharge (acre-ft) | Head Water Stage (ft NGVD) | Tail Water Stage (ft NGVD) |
|---|---|---|---|---|---|---|
| 87.00 | 7.80 | 0.00 | 0.00 | 2.12 | 7.00 | 7.00 |
| 88.00 | 7.80 | 0.00 | 0.00 | 2.12 | 7.00 | 7.00 |
| 89.00 | 7.80 | 0.00 | 0.00 | 2.12 | 7.00 | 7.00 |
| 90.00 | 7.80 | 0.00 | 0.00 | 2.12 | 7.00 | 7.00 |

STRUCTURE MAXIMUM AND MINIMUM DISCHARGES

| Struc | Max (cfs) | Time (hr) | Min (cfs) | Time (hr) |
|---|---|---|---|---|
| 1 | 3.93 | 12.60 | 0.00 | 0.00 |

BASIN MAXIMUM AND MINIMUM STAGES

| Basin | Max (ft) | Time (hr) | Min (ft) | Time (hr) |
|---|---|---|---|---|
| Onsite | 13.34 | 12.60 | 7.00 | 0.00 |

BASIN WATER BUDGETS (all units in acre-ft)

| Basin | Total Runoff | Structure Inflow | Structure Outflow | Initial Storage | Final Storage | Residual |
|---|---|---|---|---|---|---|
| Onsite | 2.12 | 0.00 | 2.12 | 0.00 | 0.00 | 0.00 |

Project Name: Fontana Townhomes
Reviewer: Michael D. Spruce, P.E.
Project Number: 149658011
  Period  Begin: Jan 01, 2000;0000 hr  End: Jan 04, 2000;1800 hr  Duration: 90 hr
  Time Step: 0.2 hr,  Iterations: 10

Basin 1: Onsite

  Method: Santa Barbara Unit Hydrograph
  Rainfall Distribution: SFWMD - 3day
  Design Frequency: 25 year
  3 Day Rainfall: 12.5 inches
  Area: 4.72 acres
  Ground Storage: 2.57 inches
  Time of Concentration: 0.16 hours
  Initial Stage: 7 ft NGVD

| Stage (ft NGVD) | Storage (acre-ft) |
|---|---|
| 7.00 | 0.00 |
| 8.00 | 0.00 |
| 9.00 | 0.07 |
| 10.00 | 0.18 |
| 11.00 | 0.35 |
| 12.00 | 0.57 |
| 13.00 | 0.85 |
| 14.00 | 1.17 |
| 15.00 | 2.42 |
| 16.00 | 5.27 |
| 17.00 | 8.65 |

Offsite Receiving Body: Offsite1

| Time (hr) | Stage (ft NGVD) |
|---|---|
| 0.00 | 7.00 |
| 90.00 | 7.00 |

Structure: 1

  From Basin: Onsite
  To Basin: Offsite1
  Structure Type: Gravity
    Weir: Sharp Crested,  Crest Elev = 13 ft NGVD,  Length = 4 ft
    Bleeder: Inv-Tri,  Invert Elev = 7 ft NGVD,  Height = 0.5 ft
      Width = 0.5 ft
      Default Coefs: Weir Coef = 2.5,  Orifice Coef = 0.6
    Pipe: Diameter = 2 ft,  Manning's n = 0.013,  Length = 51 ft
      US Invert Elev = 7 ft NGVD,  DS Invert Elev = 7 ft NGVD,  flap gate

| Time (hr) | Cumulative Rainfall (in) | Instant Runoff (cfs) | Current Discharge (cfs) | Cumulative Discharge (acre-ft) | Head Water Stage (ft NGVD) | Tail Water Stage (ft NGVD) |
|---|---|---|---|---|---|---|
| 0.00 | 0.00 | 0.00 | 0.00 | 0.00 | 7.00 | 7.00 |
| 1.00 | 0.06 | 0.00 | 0.00 | 0.00 | 7.00 | 7.00 |
| 2.00 | 0.11 | 0.00 | 0.00 | 0.00 | 7.00 | 7.00 |
| 3.00 | 0.17 | 0.00 | 0.00 | 0.00 | 7.00 | 7.00 |
| 4.00 | 0.22 | 0.00 | 0.00 | 0.00 | 7.00 | 7.00 |
| 5.00 | 0.28 | 0.00 | 0.00 | 0.00 | 7.00 | 7.00 |
| 6.00 | 0.34 | 0.00 | 0.00 | 0.00 | 7.00 | 7.00 |
| 7.00 | 0.39 | 0.00 | 0.00 | 0.00 | 7.00 | 7.00 |
| 8.00 | 0.45 | 0.00 | 0.00 | 0.00 | 7.00 | 7.00 |
| 9.00 | 0.50 | 0.00 | 0.00 | 0.00 | 7.00 | 7.00 |
| 10.00 | 0.56 | 0.01 | 0.00 | 0.00 | 8.00 | 7.00 |
| 11.00 | 0.62 | 0.02 | 0.00 | 0.00 | 8.02 | 7.00 |
| 12.00 | 0.67 | 0.03 | 0.00 | 0.00 | 8.05 | 7.00 |
| 13.00 | 0.73 | 0.04 | 0.00 | 0.01 | 7.00 | 7.00 |
| 14.00 | 0.78 | 0.05 | 0.00 | 0.01 | 8.02 | 7.00 |
| 15.00 | 0.84 | 0.05 | 0.00 | 0.02 | 7.00 | 7.00 |

| Time (hr) | Cumulative Rainfall (in) | Instant Runoff (cfs) | Current Discharge (cfs) | Cumulative Discharge (acre-ft) | Head Water Stage (ft NGVD) | Tail Water Stage (ft NGVD) |
|---|---|---|---|---|---|---|
| 16.00 | 0.90 | 0.06 | 0.00 | 0.02 | 8.03 | 7.00 |
| 17.00 | 0.95 | 0.07 | 0.00 | 0.02 | 7.00 | 7.00 |
| 18.00 | 1.01 | 0.08 | 0.00 | 0.03 | 7.00 | 7.00 |
| 19.00 | 1.06 | 0.08 | 0.00 | 0.03 | 8.06 | 7.00 |
| 20.00 | 1.12 | 0.09 | 0.00 | 0.04 | 8.05 | 7.00 |
| 21.00 | 1.18 | 0.10 | 0.00 | 0.05 | 8.04 | 7.00 |
| 22.00 | 1.23 | 0.10 | 0.00 | 0.06 | 8.04 | 7.00 |
| 23.00 | 1.29 | 0.11 | 0.00 | 0.07 | 8.05 | 7.00 |
| 24.00 | 1.34 | 0.11 | 0.49 | 0.08 | 8.00 | 7.00 |
| 25.00 | 1.42 | 0.17 | 0.00 | 0.09 | 8.02 | 7.00 |
| 26.00 | 1.51 | 0.18 | 0.00 | 0.11 | 7.00 | 7.00 |
| 27.00 | 1.59 | 0.19 | 0.50 | 0.12 | 8.04 | 7.00 |
| 28.00 | 1.67 | 0.20 | 0.50 | 0.14 | 8.04 | 7.00 |
| 29.00 | 1.75 | 0.21 | 0.51 | 0.16 | 8.04 | 7.00 |
| 30.00 | 1.83 | 0.22 | 0.00 | 0.17 | 8.00 | 7.00 |
| 31.00 | 1.91 | 0.22 | 0.00 | 0.19 | 8.02 | 7.00 |
| 32.00 | 2.00 | 0.23 | 0.00 | 0.21 | 8.06 | 7.00 |
| 33.00 | 2.08 | 0.24 | 0.50 | 0.23 | 8.04 | 7.00 |
| 34.00 | 2.16 | 0.24 | 0.00 | 0.25 | 8.02 | 7.00 |
| 35.00 | 2.24 | 0.25 | 0.50 | 0.27 | 8.02 | 7.00 |
| 36.00 | 2.32 | 0.25 | 0.00 | 0.29 | 8.02 | 7.00 |
| 37.00 | 2.40 | 0.26 | 0.50 | 0.31 | 8.03 | 7.00 |
| 38.00 | 2.49 | 0.26 | 0.00 | 0.33 | 8.04 | 7.00 |
| 39.00 | 2.57 | 0.27 | 0.51 | 0.36 | 8.05 | 7.00 |
| 40.00 | 2.65 | 0.27 | 0.50 | 0.38 | 8.02 | 7.00 |
| 41.00 | 2.73 | 0.28 | 0.00 | 0.40 | 8.04 | 7.00 |
| 42.00 | 2.81 | 0.28 | 0.00 | 0.42 | 8.01 | 7.00 |
| 43.00 | 2.89 | 0.28 | 0.51 | 0.45 | 8.05 | 7.00 |
| 44.00 | 2.98 | 0.29 | 0.50 | 0.47 | 8.03 | 7.00 |
| 45.00 | 3.06 | 0.29 | 0.49 | 0.50 | 8.01 | 7.00 |
| 46.00 | 3.14 | 0.29 | 0.00 | 0.51 | 8.06 | 7.00 |
| 47.00 | 3.22 | 0.30 | 0.00 | 0.54 | 8.05 | 7.00 |
| 48.00 | 3.30 | 0.30 | 0.00 | 0.56 | 8.04 | 7.00 |
| 49.00 | 3.39 | 0.34 | 0.50 | 0.60 | 8.02 | 7.00 |
| 50.00 | 3.49 | 0.34 | 0.51 | 0.62 | 8.06 | 7.00 |
| 51.00 | 3.60 | 0.42 | 0.51 | 0.66 | 8.06 | 7.00 |
| 52.00 | 3.72 | 0.49 | 0.52 | 0.69 | 8.09 | 7.00 |
| 53.00 | 3.87 | 0.63 | 0.54 | 0.73 | 8.15 | 7.00 |
| 54.00 | 4.07 | 0.79 | 0.60 | 0.78 | 8.33 | 7.00 |
| 55.00 | 4.30 | 0.94 | 0.68 | 0.83 | 8.61 | 7.00 |
| 56.00 | 4.56 | 1.11 | 0.77 | 0.89 | 8.98 | 7.00 |
| 57.00 | 4.87 | 1.35 | 0.85 | 0.96 | 9.31 | 7.00 |
| 58.00 | 5.26 | 1.67 | 0.94 | 1.04 | 9.79 | 7.00 |
| 59.00 | 5.78 | 2.46 | 1.05 | 1.12 | 10.37 | 7.00 |
| 60.00 | 9.34 | 26.42 | 7.04 | 1.32 | 13.58 | 7.00 |
| 61.00 | 10.36 | 3.37 | 5.01 | 2.07 | 13.43 | 7.00 |
| 62.00 | 10.83 | 1.96 | 2.41 | 2.33 | 13.18 | 7.00 |
| 63.00 | 11.12 | 1.27 | 1.61 | 2.48 | 13.06 | 7.00 |
| 64.00 | 11.40 | 1.26 | 1.43 | 2.61 | 13.00 | 7.00 |
| 65.00 | 11.56 | 0.76 | 1.41 | 2.72 | 12.83 | 7.00 |
| 66.00 | 11.73 | 0.76 | 1.39 | 2.84 | 12.64 | 7.00 |
| 67.00 | 11.89 | 0.76 | 1.36 | 2.95 | 12.46 | 7.00 |
| 68.00 | 12.06 | 0.76 | 1.34 | 3.06 | 12.29 | 7.00 |
| 69.00 | 12.17 | 0.51 | 1.31 | 3.17 | 12.06 | 7.00 |
| 70.00 | 12.28 | 0.51 | 1.27 | 3.28 | 11.78 | 7.00 |
| 71.00 | 12.39 | 0.51 | 1.23 | 3.38 | 11.50 | 7.00 |
| 72.00 | 12.50 | 0.51 | 1.19 | 3.48 | 11.24 | 7.00 |
| 73.00 | 12.50 | 0.00 | 1.12 | 3.58 | 10.79 | 7.00 |
| 74.00 | 12.50 | 0.00 | 1.03 | 3.66 | 10.27 | 7.00 |
| 75.00 | 12.50 | 0.00 | 0.92 | 3.74 | 9.68 | 7.00 |
| 76.00 | 12.50 | 0.00 | 0.79 | 3.81 | 9.04 | 7.00 |
| 77.00 | 12.50 | 0.00 | 0.58 | 3.87 | 8.25 | 7.00 |
| 78.00 | 12.50 | 0.00 | 0.00 | 3.88 | 8.06 | 7.00 |
| 79.00 | 12.50 | 0.00 | 0.00 | 3.88 | 8.06 | 7.00 |
| 80.00 | 12.50 | 0.00 | 0.00 | 3.88 | 8.06 | 7.00 |
| 81.00 | 12.50 | 0.00 | 0.00 | 3.88 | 8.06 | 7.00 |
| 82.00 | 12.50 | 0.00 | 0.00 | 3.88 | 8.06 | 7.00 |
| 83.00 | 12.50 | 0.00 | 0.00 | 3.88 | 8.06 | 7.00 |
| 84.00 | 12.50 | 0.00 | 0.00 | 3.88 | 8.06 | 7.00 |
| 85.00 | 12.50 | 0.00 | 0.00 | 3.88 | 8.06 | 7.00 |
| 86.00 | 12.50 | 0.00 | 0.00 | 3.88 | 8.06 | 7.00 |

| Time (hr) | Cumulative Rainfall (in) | Instant Runoff (cfs) | Current Discharge (cfs) | Cumulative Discharge (acre-ft) | Head Water Stage (ft NGVD) | Tail Water Stage (ft NGVD) |
|---|---|---|---|---|---|---|
| 87.00 | 12.50 | 0.00 | 0.00 | 3.88 | 8.06 | 7.00 |
| 88.00 | 12.50 | 0.00 | 0.00 | 3.88 | 8.06 | 7.00 |
| 89.00 | 12.50 | 0.00 | 0.00 | 3.88 | 8.06 | 7.00 |
| 90.00 | 12.50 | 0.00 | 0.00 | 3.88 | 8.06 | 7.00 |

STRUCTURE MAXIMUM AND MINIMUM DISCHARGES

| Struc | Max (cfs) | Time (hr) | Min (cfs) | Time (hr) |
|---|---|---|---|---|
| 1 | 14.18 | 60.20 | 0.00 | 0.00 |

BASIN MAXIMUM AND MINIMUM STAGES

| Basin | Max (ft) | Time (hr) | Min (ft) | Time (hr) |
|---|---|---|---|---|
| Onsite | 14.01 | 60.20 | 7.00 | 0.00 |

BASIN WATER BUDGETS (all units in acre-ft)

| Basin | Total Runoff | Structure Inflow | Structure Outflow | Initial Storage | Final Storage | Residual |
|---|---|---|---|---|---|---|
| Onsite | 3.88 | 0.00 | 3.88 | 0.00 | 0.00 | 0.00 |

Project Name: Fontana Townhomes
Reviewer: Michael D. Spruce, P.E.
Project Number: 149658011
Period Begin: Jan 01, 2000;0000 hr End: Jan 04, 2000;1800 hr Duration: 90 hr
Time Step: 0.2 hr, Iterations: 10

Basin 1: Onsite

Method: Santa Barbara Unit Hydrograph
Rainfall Distribution: SFWMD - 3day
Design Frequency: 100 year
3 Day Rainfall: 16.0001 inches
Area: 4.72 acres
Ground Storage: 2.57 inches
Time of Concentration: 0.16 hours
Initial Stage: 7 ft NGVD

| Stage (ft NGVD) | Storage (acre-ft) |
|---|---|
| 7.00 | 0.00 |
| 8.00 | 0.00 |
| 9.00 | 0.07 |
| 10.00 | 0.18 |
| 11.00 | 0.35 |
| 12.00 | 0.57 |
| 13.00 | 0.85 |
| 14.00 | 1.17 |
| 15.00 | 2.42 |
| 16.00 | 5.27 |
| 17.00 | 8.65 |

STRUCTURE MAXIMUM AND MINIMUM DISCHARGES

| Struc | Max (cfs) | Time (hr) | Min (cfs) | Time (hr) |
|---|---|---|---|---|

BASIN MAXIMUM AND MINIMUM STAGES

| Basin | Max (ft) | Time (hr) | Min (ft) | Time (hr) |
|---|---|---|---|---|
| Onsite | 15.98 | 73.40 | 7.00 | 0.00 |

BASIN WATER BUDGETS (all units in acre-ft)

| Basin | Total Runoff | Structure Inflow | Structure Outflow | Initial Storage | Final Storage | Residual |
|---|---|---|---|---|---|---|
| Onsite | 5.22 | 0.00 | 0.00 | 0.00 | 5.22 | 0.00 |

**Department of Engineering and Public Works**
P.O. Box 21229
West Palm Beach, FL 33416-1229
(561) 684-4000
FAX: (561) 684-4050
www.pbcgov.com

**Palm Beach County Board of County Commissioners**
Dave Kerner, Mayor
Robert S. Weinroth, Vice Mayor
Maria G. Marino
Gregg K. Weiss
Maria Sachs
Melissa McKinlay
Mack Bernard

**County Administrator**
Verdenia C. Baker

*"An Equal Opportunity Affirmative Action Employer"*

printed on sustainable and recycled paper

December 15, 2020

Christopher W. Heggen, P.E.
Kimley-Horn
1920 Wekiva Way, Suite 200
West Palm Beach, FL 33411

**RE: Fontana Townhomes**
**Project #: 201006**
**Traffic Performance Standards Review (Revised)**

Dear Mr. Heggen:

The Palm Beach County Traffic Division has reviewed the **Fontana Townhomes** Traffic Impact Statement, revised December 9, 2020, pursuant to the Traffic Performance Standards in Article 12 of the Palm Beach County Unified Land Development Code (ULDC). The project is summarized as follows:

| | |
|---|---|
| **Municipality:** | Palm Springs |
| **Location:** | East side of Coconut Rd, about 200 feet south of Lake Worth Rd |
| **PCN:** | 70-43-44-30-01-009-0040 & 70-43-44-30-01-009-0030 |
| **Access:** | One full access driveway connection onto Coconut Rd and onto Davis Rd (As used in the study and is NOT necessarily an approval by the County through this TPS letter) |
| **Existing Uses:** | One Single Family Home |
| **Proposed Uses:** | Redevelop the site with: Low-rise Multi-Family Residential = 59 DU |
| **New Daily Trips:** | 422 |
| **New Peak Hour Trips:** | 26 (6/20) AM; 32 (20/12) PM |
| **Build-out:** | December 31, 2025 |

Based on our review, the Traffic Division has determined the proposed development does not have significant peak hour traffic impact (as defined in PBC TPS) on the roadway network and therefore, **meets** the Traffic Performance Standards of Palm Beach County.

The following site related comment should be addressed:

1. Dedicate Right-of-Way 30 feet from the centerline on Coconut Rd and 40 feet from the centerline on Davis Rd along the property frontage. This dedication will need to be free and clear of all encumbrances.

Please note the receipt of a Traffic Performance Standards (TPS) approval letter does not constitute the review and issuance of a Palm Beach County Right-of-Way (R/W) Construction Permit nor does it eliminate any requirements that may be deemed as site related. For work within Palm Beach County R/W, a detailed review of the project will be provided upon submittal for a R/W permit application. The

project is required to comply with all Palm Beach County standards and may include R/W dedication.

No building permits are to be issued by the Village after the build-out date specified above. The County traffic concurrency approval is subject to the Project Aggregation Rules set forth in the Traffic Performance Standards Ordinance.

The approval letter shall be valid no longer than one year from date of issuance, unless an application for a Site Specific Development Order has been approved, an application for a Site Specific Development Order has been submitted, or the approval letter has been superseded by another approval letter for the same property.

If you have any questions regarding this determination, please contact me at 561-684-4030 or email QBari@pbcgov.org.

Sincerely,

Hanane Akif, E.I. on behalf of
Quazi Bari, P.E., PTOE
Manager – Growth Management
Traffic Division

QB:HA:rb
ec: Addressee
Kim Glas-Castro, Director, Land Development Department, Village of Palm Springs
Hanane Akif, E.I., Project Coordinator II, Traffic Division
Steve Bohovsky, Technical Assistant III, Traffic Division

File: General - TPS - Mun - Traffic Study Review
F:\TRAFFIC\HA\MUNICIPALITIES\APPROVALS\2020\201006 - FONTANA TOWNHOMES - REVISED (2).DOCXN

THE SCHOOL DISTRICT OF
PALM BEACH COUNTY, FL

KRISTIN K. GARRISON
DIRECTOR

WANDA F. PAUL, M.ED., MBA
CHIEF OPERATING OFFICER

PLANNING AND INTERGOVERNMENTAL RELATIONS
3661 INTERSTATE PARK RD. N., STE 200
RIVIERA BEACH, FL. 33404

PHONE: 561-434-8020 / FAX: 561-357-1193
WWW.PALMBEACHSCHOOLS.ORG/PLANNING

# SCHOOL CAPACITY AVAILABILITY DETERMINATION (SCAD)

| | | | | |
|---|---|---|---|---|
| **Application** | **Submittal Date** | 01/07/2021 | | |
| | **SCAD No.** | **20121501D – D. O.** | | |
| | **FLU /Rezoning/D.O. No.** | 202001093 – Village of Palm Springs | | |
| | **PCN No. / Address** | 70-43-44-30-01-009-0030(0040) / 4090 Coconut Road | | |
| | **Development Name** | **Fontana Townhomes** | | |
| | **Agent Name** | Jerrod Purser | | |
| | **SAC No.** | 210B | | |
| | **Proposed Unit No. & Type** | **59 Multi-Family Units** | | |
| **Impact Review** | | **Palm Springs** Elementary School | **Lake Worth** Middle School | **Lake Worth** High School |
| | New Students Generated | 7 | 3 | 4 |
| | Capacity Available | **-37** | 44 | 61 |
| | Utilization Percentage | **104%** | 97% | 98% |
| **School District Staff's Recommendation** | **Based on the findings and evaluation of the proposed development, there will be negative impact on the public school system. Therefore, if the proposed development is approved by the Village Council, School District staff recommends the following condition to mitigate such impacts.**<br><br>In order to address the school capacity deficiency generated by this proposed development at the District **elementary school level**, the property owner shall contribute **$24,465** to the School District of Palm Beach County prior to the issuance of first building permit.<br><br>This school capacity contribution is intended to supplement the required school impact fee (impact fee credit has already been applied).<br>_____<br>Please note that the school impact fee credit is calculated based on the Net Impact Cost per Student, as calculated in the County's latest Impact Fee Ordinance, which was adopted on April 16, 2019. | | | |
| **Validation Period** | 1) This determination is valid from **01/11/2021** to **01/10/2022** or the expiration date of the site-specific development order approved during the validation period.<br>2) A copy of the approved D.O. must be submitted to the School District Planning Dept. prior to **01/10/2022** or this determination will expire automatically on **01/10/2022**. | | | |
| **Notice** | School age children may not necessarily be assigned to the public school closest to their residences. Students in Palm Beach County are assigned annually to schools under the authority of the School Board and by direction of the Superintendent, public school attendance zones are subject to change. | | | |

Joyce Cai

School District Representative Signature

January 11, 2021

Date

**Joyce C. Cai, Senior Planner**

Print Name & Title

**joyce.cai@palmbeachschools.org**

Email Address

CC: Iramis Cabrera, Planner, Village of Palm Springs
Joyell Shaw, PIR Manager, School District of Palm Beach County

A Higher Standard of Excellence
engenuity group inc.
ENGINEERS SURVEYORS GIS MAPPERS

C. ANDRE BAYMAN, P.S.M.
KEITH B. JACKSON, P.E.
LISA A. TROPEPE, P.E.
ADAM SWANEY, P.E., LEED AP
JENNIFER MALIN, P.S.M.

**January 11, 2021**

**To: Iramis Cabrera, Village of Palm Springs Planner**

**From: Tara Bamber, PE**

**Re: Fontana Townhomes**
**Site Plan Approval Letter**
**Engenuity Group Project No. 6001.106**

We have received the following through WeTransfer on 12-30-20:

1. Site Development Plans, 24 sheets, dated December 2020, by Kimley Horn.
2. Site Plan, 1 sheet (SP-1), revised 12-21-20, by WGI.
3. Landscape Plan, 5 sheets (LP-1.00, LP-1.01, LP-1.02, LP-5.00, LP-6.00), revised 12-21-20, by WGI.
4. Drainage Statement, 19 sheets, dated 12-18-20, by Kimley Horn.
5. PBC Traffic Performance Standard Review (Revised), 2 sheets, dated 12-15-20
6. Justification Letter, 12 sheets, resubmitted 12-21-20, by WGI.
7. Response Letter, 2 sheets, dated 12-21-20, by WGI.

We recommend Site Plan approval with the following condition:

1. Provide cross sections at the perimeter of the property.
2. Verify the placement of the weir in the control structure.
3. Verify the any construction activities will not impact the properties to the north and south adjacent to Davis Road as they are in an AE Flood Zone.
4. Provide permits from applicable agencies including, but not limited to, LWDD, SFWMD, PBCWUD, PBC Fire Rescue, etc.
5. Additional comments may be asked at time of Civil/Utility Plan review.

If you should have any questions, please give me a call at 561-655-1151.

Cc: Kim Glas-Castro
Lisa Tropepe, PE

10/26/2020

We have no comments.  Thanks Iramis.




Larry Hymowitz

Planning Specialist, Policy and Mobility Planning Section

Planning & Environmental Management - FDOT District Four

p: (954) 777-4663 f: (954) 677-7892

a: 3400 W. Commercial Boulevard, Ft. Lauderdale, FL 33309

e: lhymowitz@dot.state.fl.us w: www.DOT.state.fl.us


**Teleworking, 8-4:45 Monday through Friday,**
**can be reached by e-mail or by phone (954-777-4663)**

1/8/2021

Iramis,
I reviewed the revised plans and they are acceptable for site plan approval.
In the response letter WGI indicates they included documentation regarding coordination with LWDD regarding the auto flusher. I was not able to locate this documentation.
The applicant will be required to submit plans to PBCWUD for plan approval. This process can begin anytime.
Thank you

*Jackie Michels, P.E.*
*Project Manager*
*Palm Beach County Water Utilities*
*8100 Forest Hill Blvd.*
*West Palm Beach, Florida 33413*
*Phone (561) 493-6116*
*JMichels@pbcwater.com*

1/5/2021

Hello,

Per the results of the Notice Criteria tool, It is required the applicant fill out Form 7460, Notice of Actual Construction or Alteration. Form 7460 is available online on FAA website at the link https://oeaaa.faa.gov. FAA will perform an aeronautical study to determine if the proposed development will be a hazard to air navigation. Once FAA has provided a decision, the applicant must provide DOA a copy of their results with their application. FAA 7460 application process time is pending, it may take several months. Please contact FAA to determine the application process time.

The FAA results must be provided to DOA prior to commencement of subject construction.

Please contact me with any concerns.

Thank you

Wil Hicks

12-3-2020

After review of the survey and canal cross sections with Dave Lindley, and changes made, LWDD has no objection to the certification of this petition.

LWDD will not require additional right-of-way as originally discussed. While it would be beneficial to LWDD to obtain an additional 5 feet, LWDD will not require the property owner to convey an easement.

Thank you.

Anne H. Perry

**Anne Perry | Right-of-Way Specialist**
**Lake Worth Drainage District |** 13081 Military Trail | Delray Beach, Florida 33484
**Direct Line | 561.819.5577 | Main Line 561.498. 5363 | Fax | 561.495.9694**

***Please consider the environment before printing this email.***
Under Florida law, email addresses are public records. If you do not want your email address released in response to a public records request, do not sent electronic mail to this entity. Instead, contact this office by phone or in writing.

1/4/2020

No comment.

**From:** Iramis Cabrera <icabrera@vpsfl.org>
**Sent:** Wednesday, December 30, 2020 3:23 PM
**To:** Pedro Segovia <PSEGOVIA@pbcgov.org>
**Subject:** Fontana Townhomes

****** Note: This email was sent from a source external to Palm Beach County. Links or attachments should not be accessed unless expected from a trusted source. ******

***Hi Pedro,***

***Can you please review attached revised site plan and let me know if you have any comments?***

***Thank you and happy new year!!***

*Iramis Cabrera*
*Planner*
*Village of palm springs*
*Planning, Zoning & Building Department*
*561-965-4016*
icabrera@vpsfl.org

11/24/2020

PBC

Hello Iramis,

No comments on revised submittal. As a reminder, applicant will still need to fill out a right of way dedication package per our website. The separate instruments for right of way dedication on Coconut Rd and David Rd will need to be approved by our right of way section prior to any right of way permits being issued.

Best Regards,
Will

**Will Carey, PE**
Roadway Production Division
Palm Beach County Engineering & Public Works Dept.
(561) 684-4183 / wcarey@pbcgov.org / Mon-Fri 9am to 6pm



1/8/2021

Iramis,
I reviewed the revised plans and they are acceptable for site plan approval.
In the response letter WGI indicates they included documentation regarding coordination with LWDD regarding the auto flusher. I was not able to locate this documentation.
The applicant will be required to submit plans to PBCWUD for plan approval. This process can begin anytime.
Thank you

*Jackie Michels, P.E.*
*Project Manager*
*Palm Beach County Water Utilities*
*8100 Forest Hill Blvd.*
*West Palm Beach, Florida 33413*
*Phone (561) 493-6116*
*JMichels@pbcwater.com*

Village of Palm Springs
Land Development Department
226 Cypress Lane, Palm Springs, FL 33461
(561) 965-4016 Fax (561) 439-4132

# LETTER OF TRANSMITTAL

To: Tom Ceccarelli/Frank Castro Date: 12/30/2020
Pedro Segovia

## Fontana Townhomes – Site Plan
## 3rd submittal 12-30-2020

RE: 4063 Davis Rd and 4090 Coconut Rd –PUD Site Plan

Attached are:

- x Prints
- ☐ Reproducibles
- ☐ Correspondence
- ☐ Report
- ☐ Specifications
- ☐ Applications
- ☐ Other

| COPIES | DATE | DESCRIPTION |
|---|---|---|
| 1 | 12/21/2020 | Site Plan Package/ Civil Plans/Architecturals |

Transmitted:

- ☐ For Approval
- ☐ As Requested
- **xxxx For Review and Comment**
- ☐ For Revisions
- ☐ For Your Use
- ☐ Other

REMARKS:

Upon review, please forward any comments regarding the attached materials to me,. Should you have any questions regarding the attached materials, do not hesitate to contact me at (561) 434-5090 or icabrera@vpsfl.org. Thank you for your assistance.

Signed: Iramis Cabrera

SUGGESTION:

- INSTALLATION OF BARRIER TO PREVENT UNWANTED TRAFFIC / PEDESTRIANS DURING SWAP SHOP HOURS
- ALSO ADVISE OF NOISE ISSUES DUE TO SWAP SHOP

1/7/21

## SITE DATA

| | |
|---|---|
| GROSS SITE AREA | 4.73 AC. |
| NET SITE AREA | 4.48 AC. |
| TOTAL PROPOSED UNITS (TOWNHOME) | 59 D.U. |
| GROSS DENSITY | 12.5 D.U./AC. |
| OPEN SPACE REQUIRED | 1.57 AC.(35%) |
| OPEN SPACE PROVIDED | 1.87 AC.(41%) |
| COMMON AMENITY REQUIRED/PROVIDED | 0.31 AC.(20% OF OPEN SPACE) |
| DRY DETENTION AREA | 0.36 AC. |

COCONUT ROAD

DAVIS ROAD

DRY DETENTION
0.32 AC.

DRY DETENTION
0.04 AC.

RECREATION AREA
0.31 AC.

TOT LOT

# Fontana Townhomes

Site Plan Graphic

N

0′ 15′ 30′ 60′ 90′

SCALE: 1″ = 30′-0″

WGI

# SCHEME 1 of 3


DRIFT OF MIST SW 9166
IRON ORE SW 7069
ALPACA SW 7022
EXTRA WHITE SW 7006
ACTUAL COLOR MAY VARY FROM ON-SCREEN PRESENTATION

# SCHEME 2 of 3


DRIFT OF MIST SW 9166
IRON ORE SW 7069
PASSIVE SW 7064
EXTRA WHITE SW 7006
ACTUAL COLOR MAY VARY FROM ON-SCREEN PRESENTATION

# SCHEME 3 of 3


DRIFT OF MIST SW 9166
NORTH STAR SW 6246
IRON ORE SW 7069
EXTRA WHITE SW 7006
ACTUAL COLOR MAY VARY FROM ON-SCREEN PRESENTATION

**LEGAL DESCRIPTION**

PARCEL 1:

LOT D, LESS THE EAST 15 FEET FOR ROAD RIGHT-OF-WAY IN BLOCK 9, THE PALM BEACH FARMS CO. PLAT NO. 7, ACCORDING TO THE PLAT THEREOF AS RECORDED IN PLAT BOOK 5. PAGE 72. PUBLIC RECORDS OF PALM BEACH COUNTY, FLORIDA.

PARCEL 2:

LOT B, LESS THE NORTH 53 FEET THEREOF; ALL OF LOTS C AND D; AND LOT E, LESS THE SOUTH 70 FEET THEREOF, ALL IN BLOCK 10, THE PALM BEACH FARMS CO. PLAT NO. 7, ACCORDING TO THE PLAT THEREOF, AS RECORDED IN PLAT BOOK1 PAGE 72. PUBLIC RECORDS OF PALM BEACH COUNTY, FLORIDA.

PARCEL 3:

PREMISES KNOWN AS THE WESTERLY 160.51 FEET OF LOT E, BLOCK 9, LYING NORTH OF THE LAKE WORTH DRAINAGE DITCH LATERAL CANAL L-12, ACCORDING TO THE PLAT OF THE PALM BEACH FARMS CO. PLAT NO.7, ACCORDING TO THE PLAT THEROF AS RECORDED IN PLAT BOOK 5, PAGE 72. AND MORE PARTICURLAY DESCRIBED AS FOLLOWS:

BEGINNING AT THE NORTH QUARTER (1/4) CORNER OF SECTION 30, TOWNSHIP 44 SOUTH, RANGE 43 EAST, SAID POINT ALSO BEING IN THE CENTER LINE OF DAVIS ROAD; THENCE RUNNING, SOUTH 01 DEGREES 50 MINUTES 55 SECONDS WEST 546.70 (DEED) 546.85, (CALC_ FEET TO A POINT; THENCE RUNNING NORTH 87 DEGREES 38 MINUTES 05 SECONDS WEST 171.78 (DEED), 171.74 (CALC) FEET TO THE POINT OF BEGINNING AND THE NORTHEAST CORNER OF THIS PARCEL BEING DESCRIBED; THENCE, NORTH 87 DEGREES 38 MINUTES 05 SECONDS WEST 160.51 FEET TO AN IRON PIPE; THENCE, SOUTH 01 DEGREEES 51 MINUTES 22 SECONDS WEST 60.37 FEET TO AN IRON PIPE; THENCE, SOUTH 75 DEGREES 31 MINUTES 34 SECONDS EAST 164.47 FEET ALONG THE NORTH RIGHT-OF-WAY OF LAKE WORTH DRAINAGE DITCH LATERAL CANAL L-12 TO AN IRON PIPE; THENCE, NORTH 01 DEGREES 51 MINUTES 22 SECONDS EAST 94.87 FEET TO THE POINT AND PLACE OF BEGINNING.

LOT C LESS THE NORTH 30 FEET THEREOF, BLOCK 9, THE PALM BEACH FARMS CO. PLAT NO. 7, ACCORDING TO THE PLAT RECORDED IN PLAT BOOK 37 PEGE(S) 72, AS RECORDED IN THE PUBLIC RECORDS OF PALM BEACH COUNTY, FLORIDA.

CONTAINING 205,881 SQUARE FEET OR 4.726 ACRES.

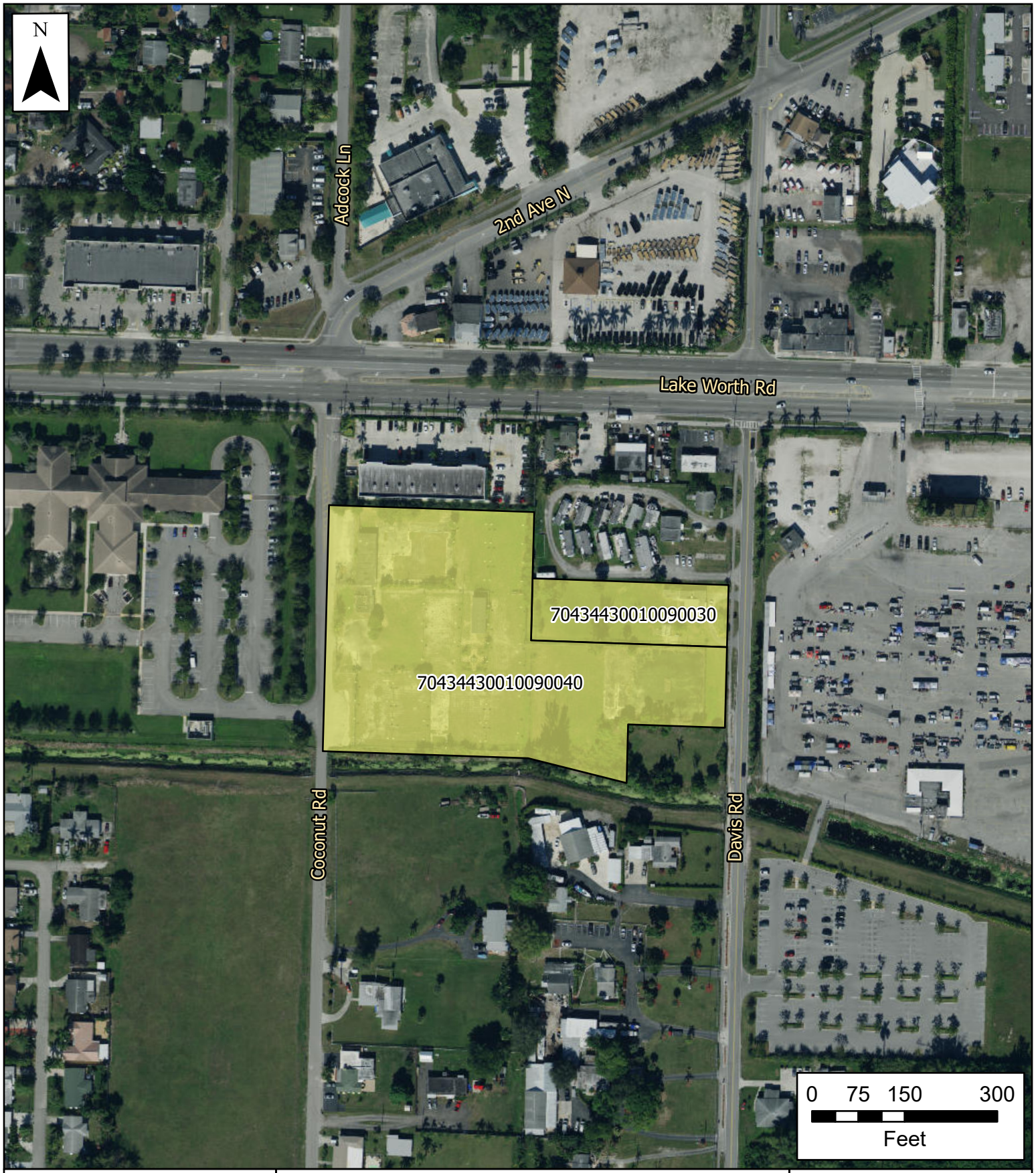


# Village of Palm Springs

## Fontana Townhomes

Property Boundary

The Data is provided "as is" without warranty or any representation of accuracy, timeliness or completeness. The burden for determining accuracy, completeness, timeliness, merchantability and fitness for or the appropriateness for use rests solely on the requester. The Village of Palm Springs make no warranties, express or implied, as to the use of the licensed Data. There are no implied warranties of merchantability or fitness for a particular purpose. The requester acknowledges and accepts the limitations of the Data, including the fact that the Data is dynamic and is in a constant state of maintenance, correction and update

Data Source: Property boundary provided by Palm Beach County, World Imagery Basemap provided by ESRI Online Services.

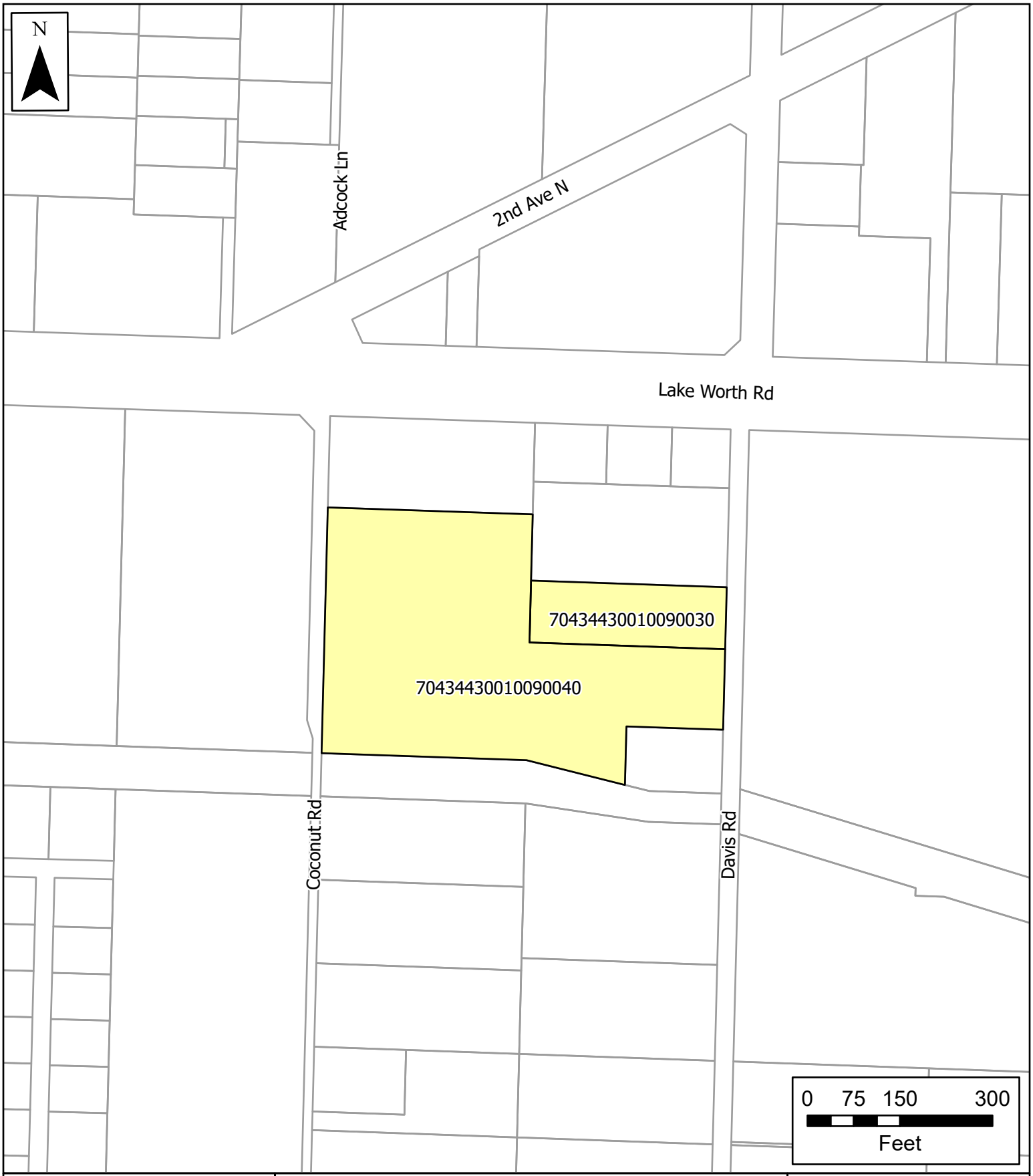


# Village of Palm Springs

## Fontana Townhomes

Parcels

Property Boundary

The Data is provided "as is" without warranty or any representation of accuracy, timeliness or completeness. The burden for determining accuracy, completeness, timeliness, merchantability and fitness for or the appropriateness for use rests solely on the requester. The Village of Palm Springs make no warranties, express or implied, as to the use of the licensed Data. There are no implied warranties of merchantability or fitness for a particular purpose. The requester acknowledges and accepts the limitations of the Data, including the fact that the Data is dynamic and is in a constant state of maintenance, correction and update

Data Source: Parcels provided by Palm Beach County

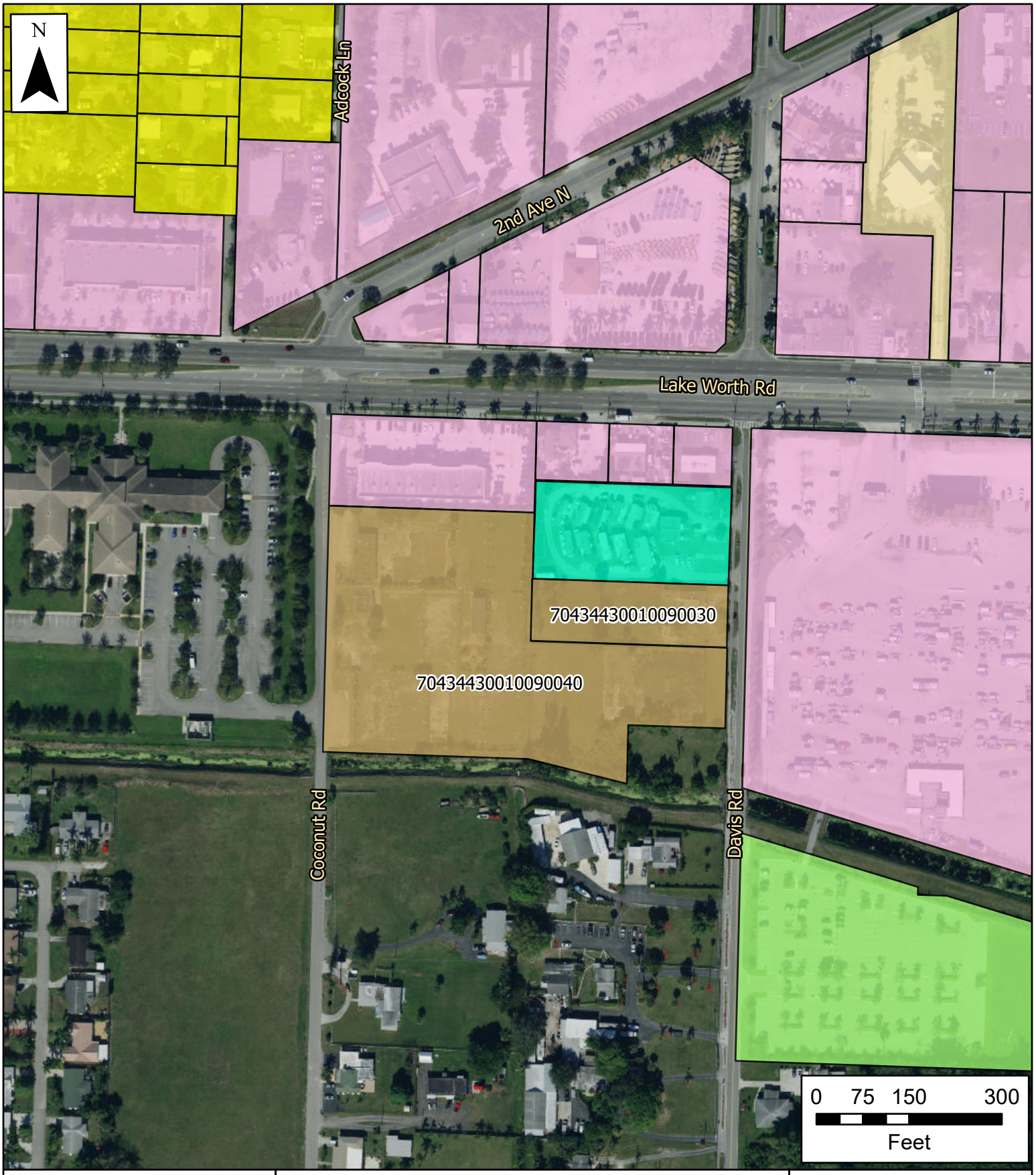


# Village of Palm Springs

## Fontana Townhomes

## Future Land Use Map

- Commercial
- High Density Residential
- Low Density Residential
- Medium Density Residential
- Public Buildings and Facilities
- County FLU

The Data is provided "as is" without warranty or any representation of accuracy, timeliness or completeness. The burden for determining accuracy, completeness, timeliness, merchantability and fitness for or the appropriateness for use rests solely on the requester. The Village of Palm Springs make no warranties, express or implied, as to the use of the licensed Data. There are no implied warranties of merchantability or fitness for a particular purpose. The requester acknowledges and accepts the limitations of the Data, including the fact that the Data is dynamic and is in a constant state of maintenance, correction and update

Data Source: Parcels provided by Palm Beach County, FLU provided by the Village of Palm Springs

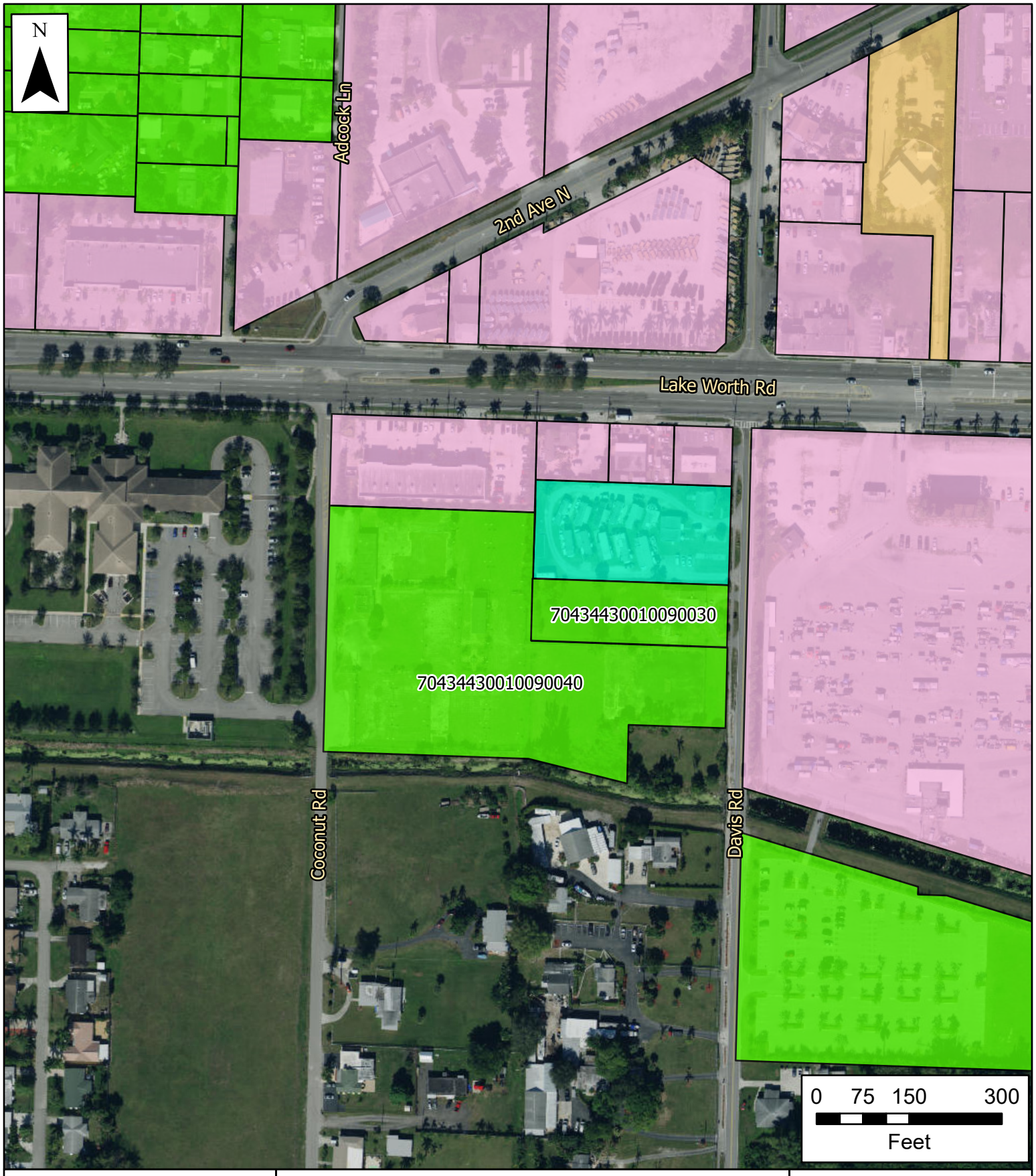


# Village of Palm Springs

## Fontana Townhomes

## Zoning Map

County Zoning
CG (Commercial General)
G (Governmental)
RM (Residential Multi-Family)

The Data is provided "as is" without warranty or any representation of accuracy, timeliness or completeness. The burden for determining accuracy, completeness, timeliness, merchantability and fitness for or the appropriateness for use rests solely on the requester. The Village of Palm Springs make no warranties, express or implied, as to the use of the licensed Data. There are no implied warranties of merchantability or fitness for a particular purpose. The requester acknowledges and accepts the limitations of the Data, including the fact that the Data is dynamic and is in a constant state of maintenance, correction and update

Data Source: Parcels provided by Palm Beach County, Zoning provided by the Village of Palm Springs

**PUBLIC HEARING NOTICE**

Notice is hereby given that public hearings will be held on:

**Tuesday, March 9, 2021 at 6:30 p.m. by Planning & Zoning Board**
**Thursday, April 8, 2021 at 6:30 p.m. by Local Planning Agency**
**Thursday, April 8, 2021 at 6:30 p.m. by the Village Council**, after LPA Meeting
**Thursday, May 13, 2021 at 6:30 p.m. by the Village Council**

In the Village Hall Council Chambers at 226 Cypress Lane, Palm Springs, FL 33461 to consider:

**Small-Scale Land Use Amendment, Rezoning and Site Development Plan**

An application submitted by Jerrod Purser, agent for Meritage Homes of Florida, Inc. ("Applicant"), for Small-Scale Land Use Amendment of the Future Land Use Map (FLUM) to change the land use from Urban Infill to High Density Residential land use, concurrent with Rezoning from Urban Infill (UI) to Residential Multiple-Family (RM) and a Planned Development Site Plan (**SPR21-02**) with waivers, for construction of fifty-nine (59) two-story fee simple townhomes, located on the two unified parcels, totaling of 4.73 acres, at 4063 Davis Road and 4090 Coconut Road.

Ordinance No. 2021-02: Comprehensive Plan Amendment to designate the Village Future Land Use of the subject properties to "High Density Residential" and concurrently designate with the Land Development to "Residential Multiple-Family" (RM).

Resolution No. 2021-03 Fontana Townhomes Planned Development Site Plan with Waivers

All persons interested in these matters may appear at the times and place aforesaid and be heard. Prior to the meeting the application may be reviewed at the Village Clerk's Office.

If a person decides to appeal any decision made by the above Boards with respect to any matter considered at such hearings, he or she will need a record of the proceedings, and for such purpose may need to ensure that a verbatim record of the proceedings is made, which record includes the testimony and evidence upon which the appeal is to be based. Persons who need an accommodation to attend or participate in this meeting should contact the Village Clerk at (561) 965-4010 at least three (3) days prior to the meeting to request such assistance.

VILLAGE OF PALM SPRINGS, FLORIDA
Kimberly M. Wynn, Village Clerk
Publish: Lake Worth Herald
February 25, 2021, March 25, 2021, and April 29, 2021

# Village of Palm Springs

# Executive Brief

**AGENDA DATE:** May 13, 2021

**DEPARTMENT:** Planning, Zoning & Building

---

**ITEM 9.5:** Resolution No. 2021-10 - Site Development Plan Amendment (SPR21-06) Special Exception Use (PSSE21-02) and Hours of Operation (PSV21-07) - Five Star Education - 2390 South Military Trail (*Quasi-Judicial Hearing*)

**SUMMARY:** Ms. Martie A. Lovely, applicant, is requesting a Site Plan amendment (SPR21-06) and Special Exception Use (PSSE21-02) approval to re-establish the child daycare use and educational use for the Commercial General property located at 2390 South Military Trail.

Note: Currently, the 3.39 acres property is developed with 5 buildings and 1 portable structure for a total of 22,889 square feet floor area. The property was annexed into the Village in 2001 as a developed parcel and has been used continuously as a place of worship (church).

In 2003 the Village Council approved a site plan and special exception use under Resolution No. 2003-68 to permit educational use on the property (a charter school sponsored by Palm Beach County as a public school of choice). It was initially serving kindergarten through third grade with approval to add an additional grade per year over two years (until it reached fifth grade) but never exceeding 190 students.

Per Village Code, the approved special exception use is valid as long as it remains in operation, and should it cease or not be utilized for more than 12 months, the approved becomes null and void. The educational buildings are still present on the property but have been unutilized for many years.

The applicant is proposing to re-establish the daycare and school use on the property, utilizing the existing buildings previously approved for the same type of use. At this time the applicant is proposing a maximum of 62 children (infant to pre-kindergarten) and a maximum of 89 students (kindergarten to fifth grade) for a total of 151 children/students.

A site plan amendment is being requested to enable the applicant to bring the property up to code, to the extent possible, and to be consistent with the Village's Commercial General (CG) zoning district regulations. Additionally, the proposed site plan provides enhanced landscape buffers, dumpster enclosure, upgrades to the interior of the building and cosmetic work to the exterior facades.

Additionally, the applicant is requesting one (1) variance:

1. (PSV21-07) - Request to allow business operations to commence at 6:00 am (one hour early) [Provides relief from Section 34-891(1) that restricts business activities prior to 7:00 a.m.]

Note: The proposed hours of operation variance was not considered by Planning & Zoning Board as Village Code (Sec. 34-891 - Hours of Operation) provides that operational hours are approved by the Village
Council.

The Planning and Zoning Board considered this application during their April 13, 2021 meeting and recommended approval.

Planning, Zoning & Building Staff does not object to the proposed special exception use, site plan amendments and hours of operation variance and recommends conditional approval of the proposed development subject to twenty-eight (28) conditions.

**FISCAL IMPACT:**

The proposed project is not expected to have a direct fiscal impact on the Village as it the use is anticipated to be tax exempt. Additionally, this project, if approved, would require various Village services that will result in increased expenditures to the Village.

**ATTACHMENTS:**

Proposed Resolution No. 2021-10 - Site Development Plan Amendment (SPR21-06) Special Exception Use ( PSSE21-02) and Variance (PSV21-07) - 2390 South Military Trail
Exhibit "A" Staff Report & Conditions of Approval
Project Narrative and Justification Statement
Warranty Deed
Aerial Map and Location Map
Site Plan, Landscape Plans, Architectural and Letter

**RESOLUTION NO. 2021-10**

**A RESOLUTION OF THE VILLAGE COUNCIL OF THE VILLAGE OF PALM SPRINGS, FLORIDA, (APPROVING/DENYING), WITH CONDITIONS, A SITE PLAN DEVELOPMENT AMENDMENT, (SPR21-06), AND SPECIAL EXCEPTION USE (PSSE21-02) TO PERMIT EDUCATIONAL USE AND RE-ESTABLISH THE DAYCARE AND SCHOOL USE AND ALLOW HOURS OF OPERATION VARIANCE (PSV21-07) TO COMMENCE AT 6:00 A.M. RATHER THAN 7:00 A.M., LOCATED AT 2390 SOUTH MILITARY TRAIL AND PROVIDING FOR AN EFFECTIVE DATE.**

**WHEREAS,** Ms. Martie A. Lovely, applicant for Five Star Education, ("Applicant") is requesting a Site Plan Amendment (SPR21-06) and Special Exception (PSSE21-02) approval to re-establish the child daycare use and educational use for the Commercial General property located at 2390 South Military; and

**WHEREAS,** Ms. Lovely, Applicant ("Applicant") is requesting one (1) variance relief, (PSV21-07); and

1. Section 34-891(1) to allow business operations to commence at 6:00 am (one hour early) [Provides relief from Section 34-891(1) that restricts business activities prior to 7:00 a.m.]

**WHEREAS,** the Planning & Zoning Board ("Board") considered the Site Plan Amendment (SPR21-06) and Special Exception Use (PSSE21-02) during their April 13, 2021 meeting and in light of the applicable legal criteria set forth in Chapter 34 of the Palm Springs Code and the sworn testimony and other evidence presented at public hearing, and the Board recommended approval of the application; and

**WHEREAS,** the Village Council heard the request for variance relief, (PSV21-07)in public session; has considered the presentation and other evidence presented by the Applicant; has received and considered the recommendations of the Village Staff; and has otherwise been fully informed regarding this matter.

**NOW THEREFORE, BE IT RESOLVED BY THE VILLAGE COUNCIL OF THE VILLAGE OF PALM SPRINGS, FLORIDA:**

**Section 1.** The Village Council, having received and considered the request of Ms. Martie A. Lovely, Applicant ("Applicant"), for approval of Site Plan Amendment (SPR21-06), Special Exception Use (PSSE21-02), determines as follows:

_____**Having been otherwise fully apprised of the premises herein, the Village Council hereby adopts the findings of the Board and approves the said application**

**as revised, with the staff report conditions attached hereto as Exhibit "A", and which is incorporated herein by reference**.

**OR**

_____**Having been otherwise fully apprised of the premises herein, the Village Council hereby rejects the Board findings and denies the application for the following reason(s):**

---

**Section 1.** The Village Council having received and considered the request of Ms. Martie A. Lovely, Applicant ("Applicant"), for approval of one (1) variance (PSV21-07) from Section 34-891(1) to allow business operations to commence at 6:00 a.m. in light of the applicable legal criteria set forth in Chapter 34 of the Palm Springs Code and the sworn testimony and other evidence presented at public hearing, determines as follows:

_____**Having been otherwise fully apprised of the premises herein, the Village Council hereby finds that there is substantial evidence to support same, and hereby APPROVES the request for the above-described variance relief.**

**OR**

_____**Having been otherwise fully apprised of the premises herein, the Village Council hereby DENIES the application for variance relief, finding that the requirements of Chapter 34 have not been met for the following reason(s):**

---

---

Notwithstanding any exceptions, conditions or other approvals granted herein, the applicant must conform to all other applicable codes, ordinances, and laws whether stated herein or not.

**Section 2.** This Resolution shall take effect immediately upon adoption.

Council Member _____ offered the foregoing resolution. Council Member_____ seconded the motion, and upon being put to a vote, the vote was as follows:

| | Aye | Nay | Absent |
|---|---|---|---|
| BEV SMITH, MAYOR | □ | □ | □ |
| GARY M. READY, VICE MAYOR | □ | □ | □ |

| | | | |
|---|---|---|---|
| DOUG GUNTHER, MAYOR PRO TEM | □ | □ | □ |
| PATTI WALLER, COUNCIL MEMBER | □ | □ | □ |
| JONI BRINKMAN, COUNCIL MEMBER | □ | □ | □ |

The Mayor thereupon declared the Resolution duly passed and adopted this _____ day of _____2021.

VILLAGE OF PALM SPRINGS, FLORIDA

BY:_____
BEV SMITH, MAYOR

ATTEST:

BY:_____
KIMBERLY M. WYNN, VILLAGE CLERK

REVIEWED FOR FORM AND LEGAL SUFFICIENCY

BY:_____
GLENN J. TORCIVIA, VILLAGE ATTORNEY

PLANNING, ZONING & BUILDING STAFF REPORT

SUBJECT: Special Exception Use and Site Plan Amendment with One (1) Variance - Five Star Education, Inc. – 2390 South Military Trail.

| Application Summary | | | |
|---|---|---|---|
| Applicant / Petitioner | Martie A. Lovely | Submittal Date | 11/19/2020 |
| Reference Name | Five Star Education, Inc. | Case Number | SPR21-06, PSSE21-02, PSV21-07 |
| | | Parcel Control No | 70-42-44-13-02-003-0151 |
| Location | 2390 South Military Trail | Site Area | ± 3.39 acres |
| P&Z B Meeting | April13, 2021 | Council Meeting | May 13, 2021 |
| **Requests** | | | |
| Proposed Use(s) | Site Plan Amendment and concurrent request for a Special Exception Use to allow the re-establishment of a child day care facility and private school use within 5,848 square feet existing structures with a maximum of 89 students and 62 children. | | |
| Number of Buildings | 6 existing structures total<br>1 Church building (11,000 sf)<br>1 Community Center building (5,435 sf)<br>1 Non-infant childcare facility building (2,674 sf) – Building A<br>1 infant childcare facility building (706 sf) – Building B<br>1 educational building (2,780 sf) – Building C<br>Detach restroom building (294 sf) | | |
| Variances | COUNCIL CONSIDERATION:<br>PSV21-07 Requesting a Variance relief from Section 34-891(1) to allow business operation to commence at 6:00 am instead of 7:00 am required. | | |

| Parking | | | |
|---|---|---|---|
| Code | Required | Provided | Meets Requirement |
| Total Overall Parking | Church 1/4 seats or 1/100 sf @ 545 seats = 137spaces<br>Or @ 16,435 sf = 165 spaces<br>Childcare facility (62 maximum)<br>1/ employee @ 17 employee = 17 spaces<br>1/8 pupils @ 62 pupils = 8 spaces<br>School (89 elementary students maximum)<br>1/ classroom @ 3 classrooms = 3 spaces<br>1/ employee @ 5 employees = 5 spaces<br>Total of 198 spaces | 142 (existing) | No (existing non-conforming property)<br>**Daycare/school won't operate at the same time at no given time** |

| Site Characteristics | | | |
|---|---|---|---|
| Existing Use | Church | Proposed Use | Church and adding a childcare facility and school |
| Existing Zoning | Commercial General (CG) | Existing Future Land Use | Commercial |

| Surrounding Existing Land Use, Future Land Use, and Zoning | | | |
|---|---|---|---|
| Direction | Existing Use | Future Land Use | Zoning District |
| North | Commercial businesses and residential use | Commercial & Low Density Residential | Commercial General (CG) & Residential Multiple-Family |
| South | Commercial businesses and residential use | Commercial & Medium Density Residential | Residential Multiple-Family (RM) |

| | | | |
|---|---|---|---|
| East | Residential Multi-Families Residences | Low Density Residential | Residential Multiple-Family (RM) |
| West | Place of assembly | Unknown Unincorporated Palm Beah County | Unknown Unincorporated Palm Beah County |
| Recommendation | | | |
| Planning, Zoning & Building Staff recommends conditional approval for the proposed re-establishment of the child daycare and school uses on the property, as depicted on the proposed site plan, based on consistency with the Village Comprehensive Plan and compatibility with surrounding uses, and supports the requested variance. | | | |




I. Site History

- Ordinance 2000-74: Annexation

On January 25, 2001, the property was voluntarily annexed into the Village of Palm Springs as a developed parcel and designated with the Land Development as Commercial General zoning district and Commercial Future Land Use designation.

- Resolution 2003-68: Site Plan

On July 24, 2003, the Village Council approved the above resolution to allow the use of the property as a charter school and daycare with a maximum of 190 students.

II. Comprehensive Plan Consistency

The subject property's Future Land Use designation and Zoning are Commercial and Commercial General (CG), respectively. The proposed use is permitted as special exception use and is generally consistent with goals, objectives and policies of the Village's Comprehensive Plan. With the proposed use, the property is proposed to be revitalized and improvement to the exterior of the site will create a beneficial visual impact to the neighborhood.

## III. Variances Requested

The applicant is seeking the following variances:

- PSV21-07 Requesting Variance relief from Section 34-891(1) to allow business operations to commence at 6:00 am instead of 7:00 am required.

The applicant's full justification is hereto:

*a. That special condition and circumstances exist which are peculiar to the land, structure, or building involved, and which are not applicable to other lands, structures, or buildings in the same land development district.*

Hours of Operation are unique to the use proposed as a childcare/school facility for the local residents. The limitation of the hours of 7am-11pm is not consistent with the proposed use as a childcare facility. The proposed request from 6am-6pm operations is consistent with other childcare/school facilities within the Village of Palm Springs.

*b. That the special conditions and circumstances do not result from the actions of the applicant.*

The unique condition of the operation cycle for the proposed use is standard operating procedure within this industry. The applicant is only proposing to operate this facility in a consistent manner with other like facilities on similar roadways and in similar locations. The applicant is not requesting more than what has been afforded other like childcare/schools within the Village

*c. That granting the variance requested will not confer on the applicant any special privilege that is denied by this chapter to other lands, buildings, or structures in the same land development district.*

Literal interpretation of this article certainly would deprive the applicant of rights commonly enjoyed by similar facilities. The most recent examples are the Kreative Kids Lake Worth facility located on 10th Ave. N. as well as Creative Learning Experience located off Miller Rd. Limiting this site would clearly deprive the applicant of similar rights enjoyed by like uses.

*d. That literal interpretation of the provisions of this chapter would deprive the applicant of rights commonly enjoyed by other properties in the same land development district under the terms of this chapter and would work unnecessary and undue hardship on the applicant.*

As stated above, the minimum variance necessary is from 6am-6pm to be consistent with the similar uses within the vicinity. There are no site constraints that deem this location different or unique from the other facilities that operate consistent with this request. Any limitation on the hours of operation less than what has been provided to others would create a financial and competitive hardship for this site.

*e. That the variance granted is the minimum variance that will make possible the reasonable use of the land, building, or structure.*

There is no detrimental effect on the public or properties surrounding this site if the variance were to be approved. Currently, the buildings have no active use in the daytime or nighttime.

*f. That the granting of the variance will be in harmony with the general intent and purpose of this chapter.*

The granting of the variance will be in harmony with the general intent of the chapter.

*g. That such variance will not be injurious to the area involved or otherwise detrimental to the public welfare.*

The variance will not be injurious to the area involved or otherwise detrimental to the public welfare. The variance will provide flexibility to parents that need to be at work earlier.

*Staff does not object to the applicant's request, based on the applicant intent to provide more alternatives to parents/guardians to drop off their child and report to work/school on time. Staff found the variance to be in harmony with the general intent of the Village Code and will no create conflicts from the use or granting of the variance to commence business operation one hour (1 hr.) ahead of what is permitted.*

IV. Neighborhood Compatibility

1) The proposed project is located on the east side of South Military Trail between Forest Lane and Cypress Lane.
2) The project re-establishes the previously approved use of the property.
3) Enhancement to the landscaping will be beneficial to the neighborhood.
4) The project is located in proximity to predominantly residential uses.
5) Clifford O. Taylor Kirklane Elementary school is located 750 away from the property.

V. Regulatory Issues

- The site plan generally conforms to the property development standards of the CG district.
  1) Proposed project plan generally meets required site development regulations.
  2) Variance requested shall be approved by the Village Council.
  3) Permits from all applicable permitting agencies, including but not limited to PBC Fire Rescue and Village of Palm Springs are required prior to any construction.
  4) Proposed project meets the Traffic Performance Standards of Palm Beach County.

VI. Environmental Issues:

There are no environmental (wetlands, floodplains, etc.) issues identified.

VII. Community Outreach/ Notification

- The subject property was posted on March 30, 2021.
- Public Notification letters were mailed to all property owners within 300 feet radius of subject property on March 26, 2021.
- Legal advertisement was published in the paper on April 1, 2021.
- Staff has not received any inquiries or comments as a result of the notices.

VIII. Proposed Development Plan Details

The petitioner's development plans dated received on November 19, 2020 depicts the following:

- An application submitted for a Site Plan Amendment Approval and concurrently Special Exception Use with one (1) variance to re-establish the child daycare and school use of the property that was approved in 2003.
  1. Site Plan dated received November 19, 2020 revised and resubmitted on March 18, 2021.
  2. Landscape Plans dated received February 19, 2020 revised and resubmitted on March 12, 2021.
  3. Architectural plans dated received February 19, 2020 revised and resubmitted on February 23, 2021.
  4. Justification Statement and proposed use.
  5. Traffic Study.

IX Recommendation

The 3.39 acres property is located on the east side of South Military Trail between Forest Lane and Cypress Lane within a predominantly residential neighborhood. The site is currently developed with five (5) buildings and one (1) portable structure for a total of 22,889 square feet floor area. The property was annexed into the Village in 2001 as a developed

parcel and has been used as a place of worship (church) as of today.

In 2003 the Village Council approved a site plan and special exception use under Resolution 2003-68 to permit the educational use on the property as charter school sponsored by Palm Beach County as a public school of choice. It was initially serving kindergarten through third grade and adding additional grades per year for two years until it reached fifth grade but never exceeding 190 students.

Per Village Code, the approved special exception use is valid as long as it remains in operation, and should it cease or not be utilized for more than 12 months, the approval becomes null and void. The educational buildings are still present on the property but have been unutilized for many years.

The applicant is proposing to re-establish the daycare and school use on the property, utilizing the existing buildings previously approved for the same type of use. At this time the applicant is proposing a maximum of 62 children (infants to pre-kindergarten) and a maximum of 89 students (kindergarten to fifth grade). The children and student's distribution are proposed to be as follow:

| | |
|---|---|
| Building A (2,674 sf) | 43 children (1 to 4 years old) |
| Building B (706 sf) | 19 children (infants) |
| Building C (2,780 sf) | 89 students |
| Total of 151 kids/students | |

The proposed site plan includes enhancement to the landscape buffers, dumpster enclosure, upgrades to the interior of the buildings (to be in compliance with Florida Building Code) and cosmetic work to the exterior facades.

Staff has found the proposed Special Exception use to be generally consistent with goals, objectives and policies of the Village's Comprehensive Plan. The proposed use is generally consistent with the Land Development and zoning regulations and all other portions of the code. The proposed special exception use does not significantly reduce light and air to adjacent properties and would not be deterrent to surrounding properties. The new project does not negatively impact natural systems.

Planning, Zoning and Building Staff recommends conditional approval of the Special Exception Uses and Site Plan Amendment subject to the following twenty-eight (28) conditions below:

1. Build out date is December 31, 2022.
2. The special exception approval shall be implemented within 18 months of Council approval.
3. The site plan approval is valid within 24 months of Council approval.
4. The Site Plan sheet (ASP-1) shall be revised to reflect the correct structure type for Building B at time of permitting, Building B is not a CBS building.
5. Architectural overall floor plan sheet (A1) shall be revised at time of permitting to reflect the correct occupancy on suites 111 and 112, maximum occupancy shall be 5 within each room.
6. The maximum number of children attending the daycare shall not exceed 62 and the maximum number of students shall not exceed 89 at any time.
7. Proposed landscape upgrading shall be concluded prior to any operations commencement.
8. The dumpster enclosure shall be completed prior to the issuance of the business license.
9. Proposed security fence around the sport field shall be installed and completed with the Planning, Zoning & Building department prior to the issuance of the business license.
10. A life safety plan shall be provided to the Village's Planning, Zoning & Building department addressing comments issued by PBC Fire Department on February 18, 2021.
11. A building permit must be obtained with the Village's Planning, Zoning & Building department prior to any remodeling/construction work on the property.
12. No drop-off/pick-up shall be permitted from the northern parking spaces.
13. Staff shall direct customers to utilize the designated drop-off/pick-up parking spaces on the south side of the building.
14. Palm Beach County "Digital Inclusion infrastructure" (broadband antenna and related facilities) shall be

accommodated on the property (if location is determined to be desirable for broadband coverage by Palm Beach County or School District of Palm Beach County), prior to Certificate of Completion, and property owner shall voluntarily serve as a program partner (easement/agreement, electric) through the life of the program.

15. Permits must be obtained from the Village and Palm Beach County Fire Department at time of permitting.
16. Provide permits from all applicable permitting agencies at the time of permitting.
17. The construction dumpster shall be only provided by Waste Pro USA who is under franchise Agreement with the Village.
18. Landscaped areas shall be irrigated including but not limited to buffer, islands, planter boxes, etc. Non-potable water shall be used for the irrigation system per Village code.
19. The property owner shall register an Agent of Record, prior to issuance of a permit, to establish a contact person responsible for compliance with this Development Order, including site plan/landscape plan details and conditions of approval.
20. The Applicant may be required to undertake additional security measures, based on the number of complaints or calls for service for incidents at the premises, as determined by the Police Chief. Such additional security measures, as approved by the Police Chief, may include increased on-site security at the operator's sole expense.
21. All new electric utilities shall be underground.
22. A silt barrier shall be installed around the perimeter of the property (within the affected area for the site improvements and new building construction) prior to commencement of any site work or construction activity, and a track pad shall be installed at the construction entrance(s), both of which shall remain through substantial completion.
23. Any sidewalk broken or damaged during construction shall be replaced by the contractor prior to CC.
24. The Landscaping shall be certified by the Landscape Architect upon completion and prior to CC or CO .
25. Absolutely no occupancy, other than construction personnel, is permitted prior to TCC/CC.
26. The applicant may be required to provide a resident inspector for structural elements such as concrete pours in accordance with Section 109.1.3 FBC 2010 and F.S. 553.791. Determination shall be made at time of pre-construction conference with Planning Zoning and Building Director.
27. The General Contractor shall be on site during any and all construction activity in accordance with FS 489.1195.
28. At the time of CC, the petitioner shall provide the Planning, Zoning and Building Department with electronic copies of as-builts.

# Five Star Education, Inc.

16112 E. Preakness Drive, Loxahatchee Fl. 334700
Phone: 561-301-7511

**Section 4 Description of Project.**

Following is the description of Five Star Education Inc. as an attachment to the application for Special Exception (for Childcare/School Use).

The Five Star Education, Inc. is a childcare/school program focusing on education from infants to fifth grade, before and after school care, and summer camp. Five Star will provide year-round academics, and life skills development. The facility will include classrooms, offices for staff, playground area, and eating area (meals that are brought into the site, not prepared on the premises).

This request is for approval of a special exception to permit the childcare/school facility use, to re-establish the previous approvals used for a daycare and private charter school that was abandoned by the previous tenant in 2003. This site plan amendment proposes improvements (upgrade) to the interior of the buildings to be in compliance with Florida Building Code and some cosmetics work to the site to replace/ install missing vegetation, accordingly with the approved landscape plan on the Village files.

The narrative below provides a description of the Five Star Learning Academy use, and addresses the Special Exception criteria for the Childcare/School Facility use.

Five Star Learning Academy Description

- Sec. 34-1022. - Development standards.

In addition to applicable regulations and requirements otherwise set forth in this article, the following minimum standards and regulations shall apply to the development of property for a child care facility. Such standards shall be met regardless of the existence of lesser standards that may be imposed by other agencies of government.

(1) Location. Child care facilities shall be located in residential areas and designed so as to minimize any adverse effects on adjacent property.

This property is located in a residential area and surrounded by local residents. The child care is surrounded by homes and apartments.

(2) Lot area. The minimum lot area shall not be less than 10,000 square feet in area.

The lot area is not less than 10,000 square feet. The current lot size is 147,668.4

(3) Frontage. The minimum frontage for the lot shall be 100 feet.

This lot has 270 feet and we meet the minimum of 100 feet.

(4) Floor area. There shall exist a minimum usable floor area, exclusive of any space devoted to kitchen, office, storage, toilet facilities, hallways, stairs, permanent fixtures, and non-moveable furniture of not less than 1,500 square feet for a capacity of 40 children or less. Facilities with capacities exceeding 40 children shall provide 35 square feet of additional floor space per child.

The facilities have a minimum usable food space of over 1500 square feet, and will provide 35 square feet per child in the space. The building has a total of 6,454 square feet

(5) Outdoor play areas. There shall be provided a minimum of 1,500 square feet of usable outdoor play area or 75 square feet per non-infant child and 45 square feet per infant child, whichever produces the larger area. The play area shall be provided on the same lot as the principal use and shall not be located in the required front yard, or adjacent to any outdoor storage area on such use or an adjacent use.

The play area is located on the same lot as principal use and is not located in the front yard or adjacent to any outdoor storage area. The playground exceeds the 1500 square feet usable outdoor play area as well as 75 square feet per non infant child, and 45 square feet for infant children.

(6) Height and other building restrictions. The building height and other site regulations, except for those otherwise specifically cited, shall be governed by the land development district regulations within which the child care facility is proposed to be located.

The Height of the building does not exceed 45 feet and the current is 16 feet.

(7) Childcare facilities. One parking space per employee and teacher normally engaged in or about the building or grounds, or one parking space per 200 square feet of gross floor area. One off-street loading/unloading space per eight pupils shall be provided for a convenient drop-off area, with clear, unobstructed ingress and egress.

1 x employee @ 18 employees = 18 parking spaces or

1/200 of gross floor area @ 3,380 sf = 17 parking spaces

===18 parking spaces shall be provided

And 1/8 pupils @ 62 = 8 parking spaces

Total parking spaces for the day care use shall be 36

Elementary and junior high schools. One parking space per classroom, plus one parking space per employee and teacher, plus one parking space per six seats in the auditorium or other places of assembly.

1x classroom @ 3 classrooms= 3 spaces +

1 x employee @ 5 teachers = 5 spaces

Total of 8 spaces

Church 1 x 4 seats = 137 spaces

Five Star will be utilizing the facility located on 2390 S. Military Trail, Palm Springs, FL 33461 to offer academics, life skills to children.

The facility at 2390 S. Military Trail will include a reception/lobby area; Classrooms; storage and file spaces; Staff offices; large multi-purpose rooms for school related activities; employee lounge; and restrooms. There will be a total of 13 classrooms including a portable to accommodate a maximum of 62 childcare students, 89 school age and 12-18 faculty. Landscape materials (shrubs/hedges) shall be added along the north side (adjacent to the row) along the north side of the playground area. The hours of operation will be from 6am to 6pm Monday through Friday. Five Star Learning Academy will follow the State required student to staff ratio for operating a childcare facility.

To ensure the safety of our students, staff, volunteers and visitors, Five Star Learning Academy takes all necessary measures and steps to secure its facilities by installing necessary security equipment, training staff.

The existing covered walkway area shall be protected from parking area and street on the north side of the building. Landscape materials (shrubs/hedges) shall be added along the north side (adjacent to the row) along the north side of the playground area. Dumpster shall be enclosed, the dumpster enclosure shall be screened with landscape materials on the 3 sides, and landscape materials shall be added to the plans (landscape plan and site plan).

Multi-sport/ playing field shall be secured from vehicle circulation along the drive aisle on the west side. Shrubs / hedges materials, adjacent to the row, shall be added along the north and south sides of the multi-sport field.

“The majority of our Students will be parents drop off and pick up. Drop off/ pick up area (parking spaces) shall be clear, unobstructed ingress and egress. Breakfast, lunch, and snack will be provided on site to all children by an authorized National School Lunch vendor.

<u>Special Exception Criteria-Child Daycare/Private School Facility</u>
Chapter 34, Section 34-608 of the Code of Ordinances, Village of Palm Springs, requires a statement of special reasons or basis for the special exception request. This statement

should be predicated on the criteria and factors as set forth in Section 34-608(b) of the Code. The statement must include comments on each of the following individually:
(1) The proposed special exception use is consistent with goals, objectives, and policies of the village's comprehensive plan.

**The subject site is located in a Commercial designation on the Future Land Use Plan Map. The proposal is to utilize an existing church use building and site for a Childcare/School Use. Relevant goals, objectives and policies of the comprehensive plans include the following:**

**Future Land Use Element Objective B – Develop commercial development standards that are in line with an intensity of development consistent with that established on the Future Land use Map and which is oriented primarily to serving the needs of the residents while maintaining the integrity of residential areas.**

**Policy B.2: Limit commercial development to areas with direct access to collector and arterial streets.**

***This site has direct access to Military Trail.***

**Future Land Use Element Objective K – Discourage urban sprawl in order to achieve a compact urban form.**

**Policy K.1: All land uses that have been developed must be adequately served by existing public utilities.**

***The subject site is fully developed and is served by existing public utilities.***

**Policy K.2: The Village shall direct urban growth to areas, which can be served efficiently by public services and facilities.**

***The subject site is fully developed and is served by existing public services.***

**Policy K.4: All development shall be compatible with and complementary to surrounding land uses and shall not negatively affect existing approved activities.**

***The proposed development will utilize the existing site as-is with no proposed changes, will include modifications to the interior of the building only, and will not affect any surrounding approved activities or uses in a negative manner.***

(2) The proposed special exception is consistent with the land development and zoning regulations and all other portions of this Code.

**The existing development was constructed in accordance with the regulations at the time of approval, and the proposed development will utilize the existing site as-is with no proposed changes. All interior modifications will be consistent with the Village codes and Florida Building Code.**

(3) The proposed special exception use is compatible with the character and use (existing and future) of the surrounding properties in its function; hours of operation, type and amount of traffic to be generated; building location, mass, height and setback; and other relevant factors peculiar to the proposed special exception use and the surrounding property.

**There are no changes to the proposed site or exterior and is compatible with the existing character and use. Because there are no proposed changes to the site or building exterior, the building location, mass, height and setback will not change.**

(4) The establishment of the proposed special exception use in the identified location does not create a concentration or proliferation of the same or similar type of special exception use, which may be deemed detrimental to the development or redevelopment of the area in which the special exception use is proposed to be developed.

**There are known facilities similar in nature to the subject use and proximate to the subject use but based on the population characteristics and demographics of the area, there is a high demand for this type of use in this area.**

(5) The proposed special exception use does not have a detrimental impact on surrounding properties based on:

a. The number of persons anticipated be using, residing, or working on the property as a result of the special exception use;

**The number of students and faculty is based on the size of the existing office building and will be limited by the maximum occupancy standards of the Florida Building Code.**

b. The degree of noise, odor, visual, or other potential nuisance factors generated by the special exception use; and

**The outdoor activities and the use will have minimal impact on surrounding properties.**

c. The effect on the amount and flow of traffic within the vicinity of the proposed special exception use.

**As noted the students will be dropped off by parents or school bus (after care), site access is via Military Trail, and building entry is through the front (for visitors) and side (for students and faculty) thus minimizing impacts on traffic flow and effect on neighboring properties.**

(6) That the proposed special exception uses:

a. Does not significantly reduce light and air to adjacent properties.

**No changes to the existing site improvements are proposed.**

b. Does not adversely affect property values in adjacent areas.

**Approval will enable occupancy of an existing vacant building structure and will continue to be maintained and managed in a manner that will be an asset to the community and not affect property values.**

c. Would not be deterrent to the improvement, development or redevelopment of surrounding properties in accord with existing regulations.

**There are no proposed changes to the existing site. All renovations will be internal and will not impact surrounding properties.**

d. Does not negatively impact adjacent natural systems or public facilities, including parks and open spaces.

**There are no proposed changes to the existing site. All renovations will be internal and will not impact natural systems or public facilities.**

e. Provides pedestrian amenities, including, but not limited to, benches, trash receptacles, and/or bicycle parking.

**There are no proposed changes to the existing site. All renovations will be internal and will not impact natural systems or public facilities.**

**Section 34-891(1) Variance request from the hours of operation**

**Variance Criteria – Chapter 34, Section 34-329(b)(1-5)**

This variance request is to allow for the operation of the daycare to operate from 6am-6pm Monday-Friday, as opposed to the current Commercial operation hours of 7:00 am to 11:00 pm.

1. Special and unique conditions exist which are peculiar to the applicant's case and which are not generally applicable to the property located within the zoning district or neighborhood involved, such as natural or manmade sight limitations from the public rights-of-way.

Hours of Operation are unique to the use proposed as a childcare/school facility for the local residents. The limitation of the hours of 7am-11pm is not consistent with the proposed use as a childcare facility. The proposed request from 6am-6pm operations is consistent with other childcare/school facilities within the Village of Palm Springs.

2. The special and unique conditions are not directly attributable to the actions of the applicant.

The unique condition of the operation cycle for the proposed use is standard operating procedure within this industry. The applicant is only proposing to operate this facility in a consistent manner with other like facilities on similar roadways and in similar locations. The applicant is not requesting more than what has been afforded other like childcare/schools within the Village.

3. The literal interpretation of this article, as applied to the applicant, would deprive the applicant of rights commonly enjoyed by persons who are similarly situated.

Literal interpretation of this article certainly would deprive the applicant of rights commonly enjoyed by similar facilities. The most recent examples are the Kreative Kids Lake Worth facility located on 10th Ave. N. as well as Creative Learning Experience located off Miller Rd. Limiting this site would clearly deprive the applicant of similar rights enjoyed by like uses.

4. The variance granted is the minimum variance necessary for the applicant to make reasonable use of the property.

As stated above, the minimum variance necessary is from 6am-6pm to be consistent with the similar uses within the vicinity. There are no site constraints that deem this location different or unique from the other facilities that operate consistent with this request. Any limitation on the hours of operation less than what has been provided to others would create a financial and competitive hardship for this site.

5. Granting the variance is not detrimental to the public welfare, or injurious to property or improvements in the zoning district or neighborhood involved.

There is no detrimental effect on the public or properties surrounding this site if the variance were to be approved. Currently, the buildings have no active use in the daytime or nighttime.

Jul-21-2000 04:22pm 00-274958
ORB 11908 Pg 561
Con 1,400,000.00 Doc 9,800.00
DOROTHY H. WILKEN, CLERK PB COUNTY, FL

Prepared by and return to:
William Morgan Speer
Attorney at Law
W. Morgan Speer, P.A.
450 Royal Palm Way, Suite 401
Palm Beach, Florida 33480
561-655-9478

[Space Above This Line For Recording Data]

# Warranty Deed

**This Warranty Deed** made this 19th day of July, 2000 between **Calvary Baptist Church, Inc. of Palm Beach County, a Florida Not-For-Profit corporation** whose post office address is **4900 Summit Blvd., West Palm Beach, Florida 33415**, grantor, and **Love Tabernacle Assembly of God of Palm Beach, Inc., a Florida Not-For-Profit corporation** whose post office address is **P. O. Box 1429, Lake Worth, Florida 33460**, grantee:

(Whenever used herein the terms "grantor" and "grantee" include all the parties to this instrument and the heirs, legal representatives, and assigns of individuals, and the successors and assigns of corporations, trusts and trustees)

**Witnesseth**, that said grantor, for and in consideration of the sum of TEN AND NO/100 DOLLARS ($10.00) and other good and valuable considerations to said grantor in hand paid by said grantee, the receipt whereof is hereby acknowledged, has granted, bargained, and sold to the said grantee, and grantee's heirs and assigns forever, the following described land, situate, lying and being in **Palm Beach County, Florida** to-wit:

**Lots 16 through 33, inclusive and the Westerly 18 feet of Lots 15 and 34, Block 3, LESS the West 3 feet of Lots 23, 24, 25 and 26, Block 3, Anna-Johns Estates, according to the map or plat thereof as recorded in Plat Book 23, Page 219, Public Records of Palm Beach County, Florida.**

**Parcel Identification Number:** 00-42-44-13-02-003-0150

**Subject to: All conditions, restrictions, easements, rights-of-way of record, and taxes accruing subsequent to December 31, 1999.**

**Together** with all the tenements, hereditaments and appurtenances thereto belonging or in anywise appertaining.

**To Have and to Hold**, the same in fee simple forever.

**And** the grantor hereby covenants with said grantee that the grantor is lawfully seized of said land in fee simple; that the grantor has good right and lawful authority to sell and convey said land; that the grantor hereby fully warrants the title to said land and will defend the same against the lawful claims of all persons whomsoever; and that, except as noted above, said land is free of all encumbrances.

**In Witness Whereof**, grantor has hereunto set grantor's hand and seal the day and year first above written.

Signed, sealed and delivered in our presence:

Witness Name: Bruce E. Sands

Witness Name: CAREY TURNER

Calvary Baptist Church, Inc. of Palm Beach County
a Florida not for profit corporation

By: Larry Enochs
Larry Enochs
Chairman of Deacon Board

(Corporate Seal)

State of Florida
County of Palm Beach

The foregoing instrument was acknowledged before me this 19th day of July, 2000 by Larry Enochs, Chairman of the Board of Deacons of Calvary Baptist Church, Inc. of Palm Beach County, a Florida not for profit corporation, on behalf of the corporation. He [X] is personally known to me or [ ] has produced a driver's license as identification.

[Notary Seal]

W Morgan Speer
My Commission CC801787
Expires November 17 2000

W. Morgan Speer
Notary Public

Printed Name: W. MORGAN Speer

My Commission Expires: November 17, 2000

This Document is the property of the Palm Beach County Clerk & Comptroller's Office

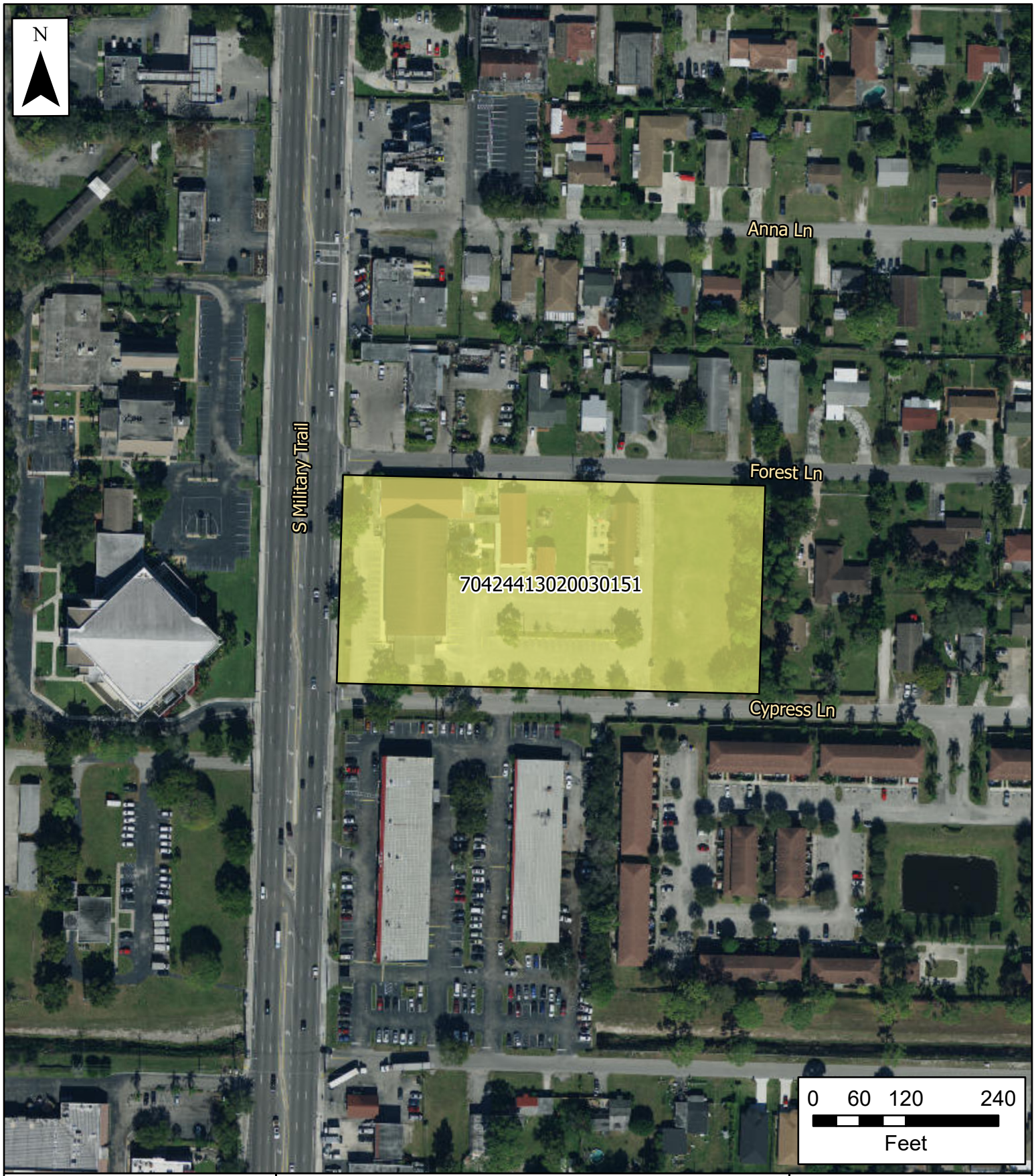


# Village of Palm Springs

## Five Star Education - 2390 S. Military Trail

Property Boundary

The Data is provided "as is" without warranty or any representation of accuracy, timeliness or completeness. The burden for determining accuracy, completeness, timeliness, merchantability and fitness for or the appropriateness for use rests solely on the requester. The Village of Palm Springs make no warranties, express or implied, as to the use of the licensed Data. There are no implied warranties of merchantability or fitness for a particular purpose. The requester acknowledges and accepts the limitations of the Data, including the fact that the Data is dynamic and is in a constant state of maintenance, correction and update

Data Source: Project boundary provided by Palm Beach County, World Imagery Basemap provided by ESRI Online Services.

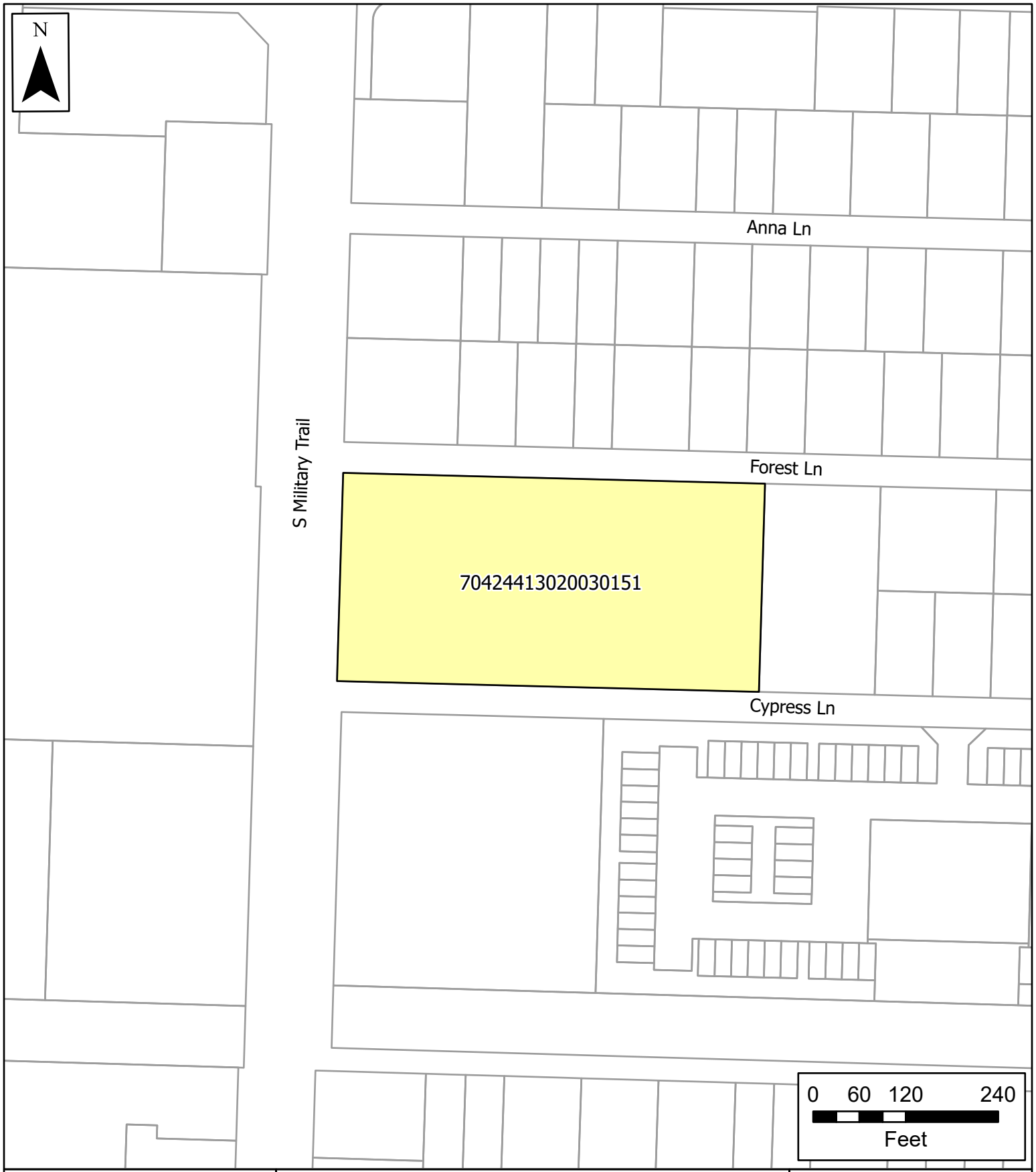


# Village of Palm Springs

## Five Star Education - 2390 S. Military Trail

Property Boundary

The Data is provided "as is" without warranty or any representation of accuracy, timeliness or completeness. The burden for determining accuracy, completeness, timeliness, merchantability and fitness for or the appropriateness for use rests solely on the requester. The Village of Palm Springs make no warranties, express or implied, as to the use of the licensed Data. There are no implied warranties of merchantability or fitness for a particular purpose. The requester acknowledges and accepts the limitations of the Data, including the fact that the Data is dynamic and is in a constant state of maintenance, correction and update

Data Source: Project boundary provided by Palm Beach County, World Imagery Basemap provided by ESRI Online Services.



VIEW - 1 V1



VIEW - 2 V2



VIEW - 3 V3



VIEW - 4 V4



VIEW - 5 V5

## SITE DATA

| | |
|---|---|
| PROJECT No: | 19008 |
| NAME OF DEVELOPMENT / PROJECT: | FIVE STAR EDUCATION |
| OWNER: | LOVE TABERNACLE ASSEMBLY OF GOD OF PALM BEACH ING. |
| PROPOSED USE(S): | INSTITUTIONAL / PRESCHOOL |
| FUTURE LAND USE DESIGNATION: | LOW DENSITY |
| ZONING DISTRICT: | CG - COMMERCIAL GENERAL |
| **SECTION/ TOWNSHIP / RANGE:** | **2940** |
| PROPERTY CONTROL No: | 70-42-44-13-02-003-0151 |
| LOT AREAGE / SF: | 3.19 ACRES - 138,966 SF |
| GROSS AREAGE / SF: | 4.28 ACRES - 186,342.37 SF |
| **FLOOR AREA RATIO (FAR):** | 0.18 |
| **BUILDING COVERAGE (%):** | 17% |
| **IMPERVIOUS SURFACE AREA(%)** | 17% |
| **BUILDING HEIGHT:** | 35' MAX |
| OPEN SPACE / COMMON AREAS: | |
| NUMBER OF STORIES: | 1 |
| FINISHED GRADE ELEVATION: | 2' +- N.G.V.D. |
| CHANGE FROM CURRENT GRADE: | 0' +- N.G.V.D. |

**PARKING:**

| | | |
|---|---|---|
| EMPLOYEES: | | |
| 19 - INFANTS ( > 12 MO.) | @ 4 CHILDREN / TEACHER | = 5 TEACHERS |
| 14 - 1-YEAR OLDS | @ 6 CHILDREN / TEACHER | = 3 TEACHERS |
| 11 - 2-YEAR OLDS | @ 11 CHILDREN / TEACHER | = 1 TEACHER |
| 12 - 3-YEAR OLDS | @ 15 CHILDREN / TEACHER | = 1 TEACHER |
| 5 - 4-YEAR OLDS | @ 20 CHILDREN / TEACHER | = 1 TEACHER |
| 84 - SCHOOLERS | @ 25 CHILDREN / TEACHER | = 4 TEACHERS |
| **TOTAL TEACHERS:** | | **= 15 TEACHERS** |
| SCHOOL DIRECTOR | | = 1 EMPLOYEE |
| RECEPTIONIST / SECRETARY | | = 1 EMPLOYEE |
| **TOTAL NUMBER OF EMPLOYEES** | | **= 17 EMPLOYEES** |

***CHILDCARE FACILITIES***, ONE PARKING SPACE PER EMPLOYEE AND TEACHER NORMALLY ENGAGED IN OR ABOUT THE BUILDING OR GROUNDS, OR ONE PARKING SPACE PER 200 SQUARE FEET OF GROSS FLOOR AREA. ONE OFF-STREET LOADING/UNLOADING SPACE PER EIGHT PUPILS SHALL BE PROVIDED FOR A CONVENIENT DROP-OFF AREA, WITH CLEAR, UNOBSTRUCTED INGRESS AND EGRESS.

1 X EMPLOYEE @ 17 EMPLOYEES = 17 PARKING SPACES OR
1/200 OF GROSS FLOOR AREA @ 3,380 SF = 17 PARKING SPACES
**17 PARKING SPACES SHALL BE PROVIDED**
AND 1/8 PUPILS @ 62 = 8 PARKING SPACES
TOTAL PARKING SPACES FOR THE DAY CARE USE SHALL BE = **26 SPACES**

***ELEMENTARY AND JUNIOR HIGH SCHOOLS***, ONE PARKING SPACE PER CLASSROOM, PLUS ONE PARKING SPACE PER EMPLOYEE AND TEACHER, PLUS ONE PARKING SPACE PER SIX SEATS IN THE AUDITORIUM OR OTHER PLACES OF ASSEMBLY.

1X CLASSROOM @ 4 CLASSROOMS = 4 SPACES +
1 X EMPLOYEE @ 4 TEACHERS = 4 SPACES
TOTAL PARKING FOR ELEMENTARY SCHOOL SHALL BE = **8 SPACES**

CHURCH SPACES
1 SPACE / 4 OCCUPANTS = 545 DIVIDED BY 4 = **137 SPACES**

TOTAL PARKING SPACES REQUIRED = 171 SPACES
TOTAL PARKING SPACES PROVIDED = 142 SPACES
**(SEE BUSINESS OPERATING CONDITIONS/ RESTRICTIONS)**

| | REQUIRED SETBACKS | PROPOSED SETBACKS |
|---|---|---|
| FRONT | 25.00' | 27.6'' |
| SIDE | 15.00' | 68.43' |
| CORNER | 20.00' | 33.33' |
| REAR | 25.00' | 91.00' |

**BUSINESS OPERATING CONDITIONS / RESTRICTIONS**

1. PRESCHOOL FACILITY OPERATING HOURS WILL BE LIMITED TO 6:00 AM. - 6:00 PM MONDAY THRU FRIDAY (5 DAYS-WEEK / 12 HOURS / DAY) PLAYGROUND AREAS WILL OPERATE ONLY DURING DAYLIGHT (DUSK - DAWN.)
2. CHURCH OPERATING HOURS WILL BE LIMITED TO 6:00 PM TO 8:00 PM MONDAY THRU FRIDAY (5 DAYS / 2 HOURS / DAY) AND SATURDAYS AND SUNDAYS.
3. AT NO GIVEN TIME DAYCARE AND CHURCH OPERATE SIMULTANEOUSLY.

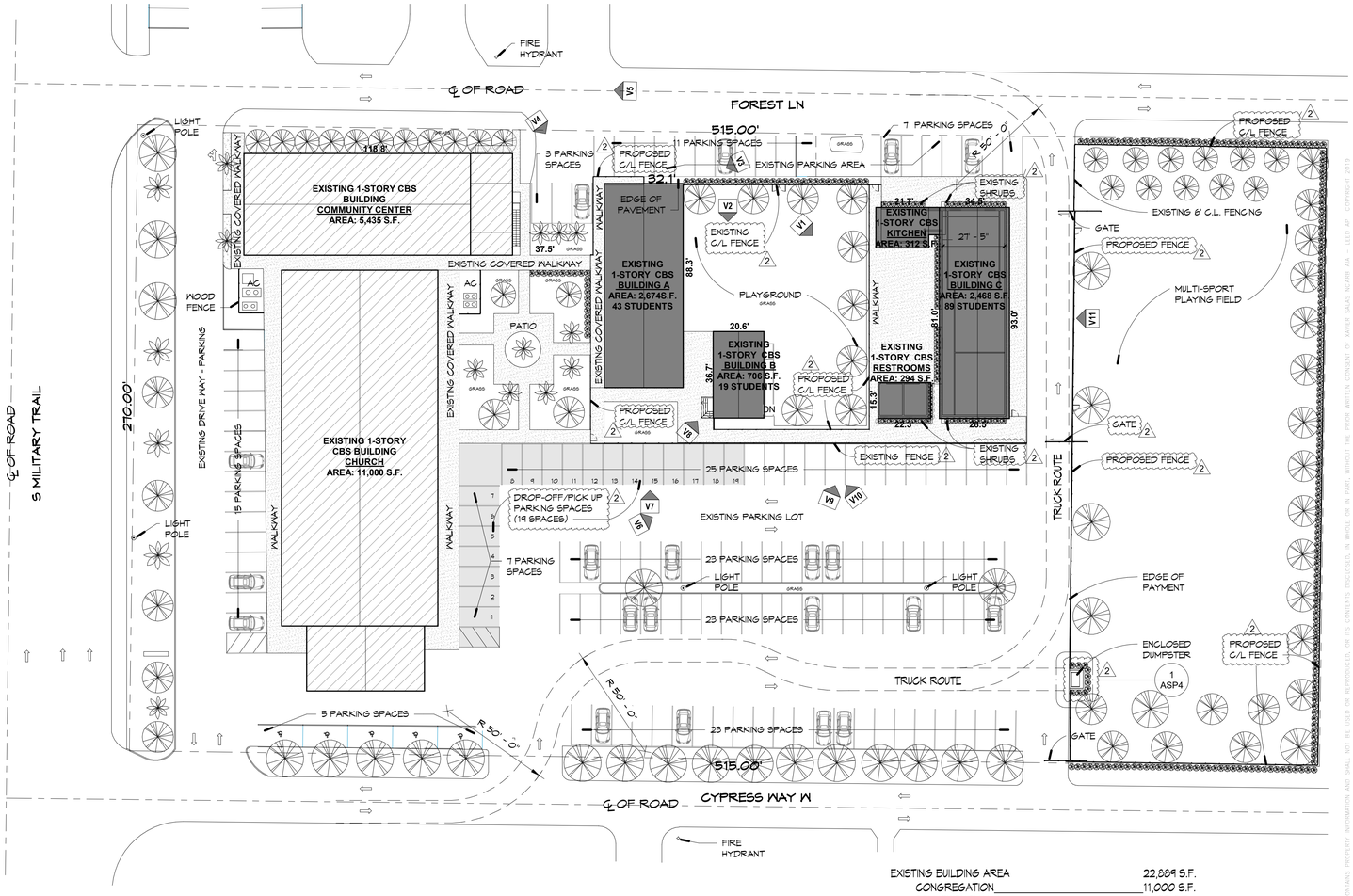


1 **EXISTING ARCHITECTURAL SITE PLAN**
1" = 30'-0"

| | |
|---|---|
| EXISTING BUILDING AREA | 22,889 S.F. |
| CONGREGATION | 11,000 S.F. |
| FELLOWSHIP HALL | 5,435 S.F. |
| SCHOOL | 6,454 S.F. |
| EXISTING LOT COVERAGE | 17% |
| PROPOSED LOT COVERAGE | 17% |
| EXISTING IMPERVIOUS AREA | 91,640 S.F. 2.10 Ac |
| PROPOSED IMPERVIOUS AREA | 91,640 S.F. 2.10 Ac |
| EXISTING PARKING SPACES | 143 |
| PROPOSED PARKING SPACES | 143 |



VIEW - 6 V6



VIEW - 7 V7



VIEW - 8 V8



VIEW - 9 V9



VIEW - 10 V10



VIEW - 11 V11


XAVIER SALAS
NCARB AIA | LEED AP
AR 98387
561.699.7472
xsalas.com

20 Forest Hills Ln
Boca Raton, FL 33431


**PROJECT**
FIVE STAR EDUCATION

**PROJECT ADDRESS**
2390 S. MILITARY TRAIL
PALM SPRINGS, FL 33415

**CLIENT**
FIVE STAR EDUCATION

**CONSULTANTS**

**REGISTRATION**
XAVIER SALAS
NCARB AIA | LEED AP
AR 98387

STATE OF FLORIDA · XAVIER SALAS · AR98387 · REGISTERED ARCHITECT

XAVIER SALAS
AR # 98387

**ISSUED FOR:**

SITE PLAN APPLICATION

| REVISIONS/ISSUES | | |
|---|---|---|
| No. | DESCRIPTION | DATE |
| 1 | BLDG. DEP. COMMENTS | 02/09/20 21 |
| 2 | BLDG. DEP. COMMENTS | 03/09/20 21 |

| | |
|---|---|
| **PROJECT NUMBER** | 19008 |
| **PROJECT MANAGER** | XS |
| **DRAWN BY** | YJ |
| **CHECKED BY** | XS |

**SHEET TITLE**
**ARCHITECTURAL SITE PLAN**

**SHEET NUMBER**
**ASP1**

**SHEET OF**


2019 XAVIER SALAS NCARB AIA LEED AP

"IT IS A VIOLATION OF THE LAW FOR ANY PERSON, UNLESS ACTING UNDER THE DIRECTION OF A LICENSED ARCHITECT, TO ALTER THESE PLANS AND SPECIFICATIONS." THIS DOCUMENT CONTAINS PROPERTY INFORMATION AND SHALL NOT BE USED OR REPRODUCED, OR ITS CONTENTS DISCLOSED, IN WHOLE OR IN PART, WITHOUT THE PRIOR WRITTEN CONSENT OF XAVIER SALAS NCARB AIA - LEED AP - COPYRIGHT 2019

FOREST LANE

CYPRESS LANE

515.00'

270.00'

EXISTING 1 STORY CBS BUILDING
COMMUNITY CENTER
AREA 5435 SF

EXISTING 1 STORY CBS BUILDING
CHURCH
AREA 11000 SF

EXISTING 1 STORY CBS BUILDING A

EXISTING 1 STORY CBS BUILDING B

EXISTING 1 STORY CBS BUILDING C

EXISTING 1 STORY CBS KITCHEN

EXISTING 1 STORY CBS RESTROOMS

EXISTING PARKING AREA

EXISTING PARKING LOT

EXISTING DRIVE WAY – PARKING

EDGE OF PVMT.

EDGE OF PAYMENT

PROPOSED 4' HEIGHT FENCE

PROPOSED GATE

EXISTING RESTROOM BUILDING C

EXIST. COVERED WALKWAY

PLAYGROUND

PATIO

A/C

COVERED DRIVE-THRU

MULTI-SPORT PLAYING FIELD

BAHIA SOD

PROPERTY LINE

EXISTING 6' C.L. FENCE

PROPOSED 6' C.L. FENCE

Enclosed Dumpster

EXISTING Veitchia Palm 15' Tall

EXISTING Jasmine

EXISTING Solitaire Palm 15' Tall

EXISTING Veitchia Palm 15' Tall

EXISTING Black Olive 12" DBH, 30' Tall

EXISTING Solitaire Palm 20' Tall

EXISTING Cocoplum

EXISTING Tamarind 20" DBH, 25' Tall

EXISTING Veitchia Palm 10' Tall

EXISTING Foxtail Palm 20' Tall

EXISTING Black Olive 16" DBH, 30' Tall

EXISTING Pine 24" DBH, 30' Tall

EXISTING Black Olive 12" DBH, 20' Tall

EXISTING Black Olive 20" DBH, 25' Tall

EXISTING Black Olive 14" DBH, 30' Tall

EXISTING Black Olive 10" DBH, 25' Tall

EXISTING Black Olive 8" DBH, 25' Tall

EXISTING Black Olive 12" DBH, 25' Tall

EXISTING Live Oak 12" DBH, 30' Tall

EXISTING Ficus 24" DBH, 35' Tall

# LANDSCAPE PLAN

SCALE: 1/16" = 1'-0"

0 16' 32' 64'

N


TONNING & ASSOCIATES, INC.
Landscape Architecture & Land Planning
Landscape Architect – Florida License #6666709
4855 NW 92 Terrace
Coral Springs, Florida 33067
Tel: 561-414-8269 Email: wtonning@tonningandassociates.com


DRWG. TITLE : LANDSCAPE PLAN

PROJECT : TABERNACLE CHURCH
2390 S. MILITARY TRAIL
WEST PALM BEACH, FLORIDA 33415

CLIENT : TABERNACLE CHURCH

SEAL

WAYNE K. TONNING, RLA
FLA #6666709

PROJECT NO. 20-109
DRAWN BY WKT
DESIGNED BY WKT
CHECKED BY WKT
DATE : 04-10-20
DWG. NO. LP-1
SHT. NO. 1 of 1
REVISIONS :
2 03-9-21
Revision 2 BLDG Dep. Comments

NOTES:

## GENERAL PLANTING REQUIREMENTS

All sizes shown for plant material on the plans are to be considered Minimum. All plant material must meet or exceed these minimum requirements for both height and spread. Any other requirements for specific shape or effect as noted on the plan(s) will also be required for final acceptance.

All plant material furnished by the landscape contractor shall be Florida #1 or better as established by "Grades and Standards for Florida Nursery Plants" and "Grades and Standards for Florida Nursery Trees". All material shall be installed as per CSI specifications.

All plant material as included herein shall be warrantied by the landscape contractor for a minimum period as follows: All trees and palms for 12 months, all shrubs, vines, groundcovers and miscellaneous planting materials for 90 days, and all lawn areas for 60 days after final acceptance by the owner or owner's representative.

All plant material shall be planted in planting soil that is delivered to the site in a clean loose and friable condition. All soil shall have a well drained characteristic. Soil must be free of all rocks, sticks, and objectionable material including weeds and weed seeds as per CSI specifications.

Twelve inches (12") of planting soil 50/50 sand/topsoil mix is required around and beneath the root ball of all trees and palms, and 1 cubic yard per 50 bedding or groundcover plants.

All landscape areas shall be covered with Eucalyptus or sterilized seed free Melaleuca mulch to a minimum depth of three inches (3") of cover when settled. Cypress bark mulch shall not be used.

All plant material shall be thoroughly watered in at the time of planting; no dry planting permitted. All plant materials shall be planted such that the top of the plant ball is flush with the surrounding grade.

All landscape and lawn areas shall be irrigated by a fully automatic sprinkler system adjusted to provide 100% coverage of all landscape areas. All heads shall be adjusted to 50% overlap as per manufacturers specifications and performance standards utilizing a rust free water source. Each system shall be installed with a rain sensor.

Each lot shall supply, install, and maintain an individual irrigation system for that individual lot.

It is the sole responsibility of the landscape contractor to insure that all new plantings receive adequate water during the installation and during all plant warranty periods. Deep watering of all new trees and palms and any supplemental watering that may be required to augment natural rainfall and site irrigation is mandatory to insure proper plant development and shall be provided as a part of this contract.

## Special Note

No items to be stored higher than the screening wall or fence.

All plant material shall be installed with fertilizer, which shall be State approved as a complete fertilizer containing the required minimum of trace elements in addition to N-P-K, of which 50% of the nitrogen shall be derived from an organic source as per CSI specifications.

Contractors are responsible for coordinating with the owners and appropriate public agencies to assist in locating and verifying all underground utilities prior to excavation.

All ideas, designs and plans indicated or represented by this drawing are owned by and are the exclusive property of Wayne K. Tonning,RLA.

The plan takes precedence over the plant list.

## SPECIAL INSTRUCTIONS

General site and berm grading to +/- 1 inch (1") shall be provided by the general contractor. All finished site grading and final decorative berm shaping shall be provided by the landscape contractor.

All sod areas as indicated on the planting plan shall receive Stenotaphrum secundatum, St. Augustine 'Floratam' solid sod. It shall be the responsibility of the landscape contractor to include in the bid, the repair of any sod which may be damaged from the landscape installation operations.

## PROPOSED PLANT LIST

### TREES / PALMS

| Code | | Drought | QTY. | Botanical Name / Common Name | Specifications |
|---|---|---|---|---|---|
| CE | (N) | V | 8 | Conocarpus erectus / Green Buttonwood | B&B Field Grown, 2" DBH, 12' OA |
| PI | (N) | V | 17 | Pinus elliotti / Slash Pine | B&B Field Grown, 2" DBH, 12' OA |
| QV | (N) | V | 40 | Quercus virginiana / Live Oak | B&B Field Grown, 2" DBH, 12' OA |
| RE | (N) | V | 4 | Roystonea elata / Florida Royal Palm | B&B Field Grown, 8' CT, 14' OA |
| SP | (N) | V | 12 | Sabal palmetto / Sabal Palm | B&B Field Grown, 8' CT, 14' OA |
| VM | | V | 1 | Veitchia montgomeryana / Veitchia Palm | B&B Field Grown, 8' CT, 14' OA |
| WB | | V | 2 | Wodyeti bifurcata / Foxtail Palm | B&B Field Grown, 8' CT, 14' OA |

### ACCENTS / SHRUBS / GROUND COVERS

| | | | | | |
|---|---|---|---|---|---|
| CIR | (N) | V | 555 | Chrysobalanus icaco / Red Tip Cocoplum | 3 Gal., 24" OA, 2' OC |
| VS | (N) | V | 20 | Viburnum suspensum / Sandankwa Viburnum | 7 Gal., 48" OA, 2' OC |

### MISCELLANEOUS

| | | |
|---|---|---|
| SOD | Stenotaphrum secundatum / St. Augustine 'Floratam' | Solid application – no gaps between seams |

| | |
|---|---|
| M | Moderate Drought Tolerance |
| (N) | Florida Native Plant Species |
| L | Low Drought Tolerance |
| V | Very Drought Tolerant |

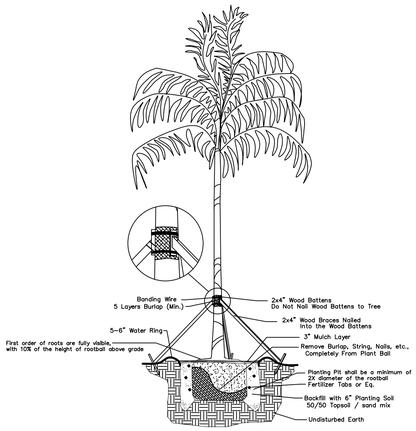


Palm Planting Detail

Not to Scale

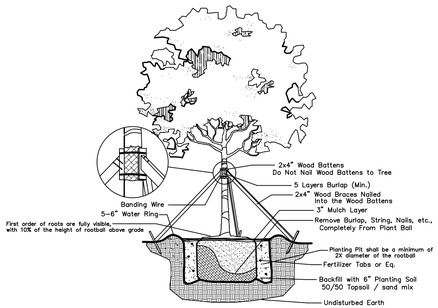


Large Tree Planting Detail

NTS

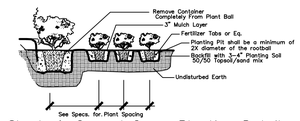


Shrub & Ground Cover Planting Detail

NTS

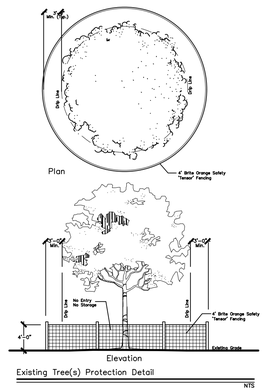


Existing Tree(s) Protection Detail

NTS

TONNING & ASSOCIATES, INC.
Landscape Architecture & Land Planning
Landscape Architect – Florida License #6666709
4855 NW 92 Terrace
Coral Springs, Florida 33067
Tel: 561-414-8269 Email: wtonning@tonningandassociates.com

DRWG. TITLE : LANDSCAPE PLAN

PROJECT : TABERNACLE CHURCH
2390 S. MILITARY TRAIL
WEST PALM BEACH, FLORIDA 33415

CLIENT : TABERNACLE CHURCH

SEAL

WAYNE K. TONNING, RLA
RLA #6666709

PROJECT NO. 20-109
DRAWN BY WKT
DESIGNED BY WKT
CHECKED BY WKT
DATE : 04-10-20
DWG. NO. LP-1
SHT. NO. 1 of 1
REVISIONS :
2 03-9-21
Revision 2 BLDG Dep. Comments

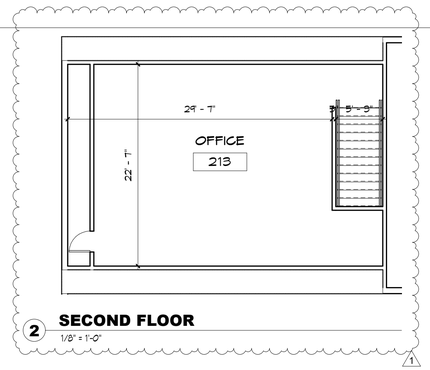


2 **SECOND FLOOR**
1/8" = 1'-0"

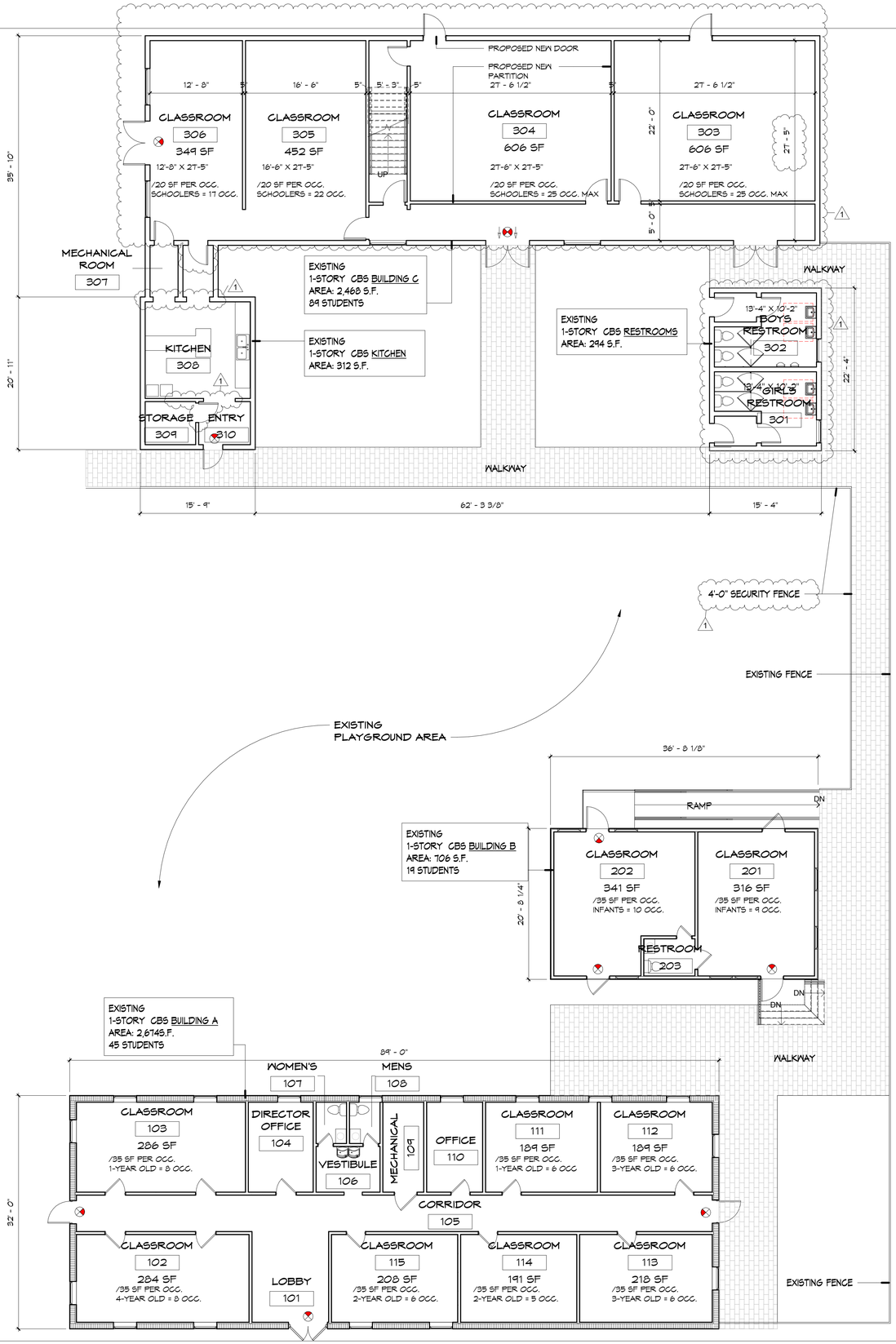


1 **ARCHITECTURAL OVERALL FLOOR PLAN**
1/8" = 1'-0"

## ARCHITECTURAL PLAN GENERAL NOTES

- DRAWINGS ARE INTENDED TO SHOW EXISTING CONDITIONS TO THE BEST OF OUR KNOWLEDGE. DIMENSIONS HAVE A TOLERANCE OF +/- 12", AND SHALL BE FIELD VERIFIED PRIOR TO DO ANY WORK.
- DO NOT SCALE DRAWINGS. DIMENSIONS IN LARGE SCALE PLANS, ELEVATIONS, AND DETAILS SHALL GOVERN OVER SMALL SCALE DETAILS. IF DIMENSIONS ARE IN QUESTION, THE CONTRACTOR SHALL BE RESPONSIBLE FOR OBTAINING CLARIFICATION FROM THE ARCHITECT BEFORE CONTINUING WITH CONSTRUCTION.
- THERE IS NO SCOPE OF WORK AS PART OF THESE DRAWINGS.
- SEE PARTITION TYPE GENERAL NOTES AND THESE DRAWINGS FOR THE REQUIRED LOCATIONS OF 5/8" TYPE X GLASS MAT PAPERLESS INTERIOR GYPSUM BOARD. THE USE OF WATER-RESISTANT GYPSUM BOARD (I.E. GREEN BOARD) IS NOT ACCEPTABLE IN WET LOCATIONS; INSTEAD, USE 5/8" TYPE X GLASS MAT PAPERLESS INTERIOR GYPSUM BOARD.
- THE CONTRACTOR SHALL VERIFY THAT THE EXISTING CONSTRUCTION (INCLUDING DAMPERS, DUCT PENETRATIONS, DOORS, WINDOWS, FRAMES, ETC) MEETS THE FIRE/SMOKE/SOUND ASSEMBLY RATINGS AT ALL WALLS/PARTITIONS/BARRIERS, FLOORS, AND ROOFS WHICH ENCLOSE OR TOUCH SPACES IN WHICH WORK IS BEING PERFORMED AS PART OF THIS PROJECT. THE CONTRACTOR SHALL ALSO MAKE ANY REPAIRS AND/OR MODIFICATIONS NECESSARY TO BRING THE EXISTING CONSTRUCTION (INCLUDING DAMPERS, DUCT PENETRATIONS, DOORS, WINDOWS, FRAMES, ETC) UP TO THE PROPER INDICATED FIRE/SMOKE/SOUND ASSEMBLY RATINGS. DOORS, WINDOWS, AND FRAMES WHICH DO NOT MEET THE REQUIREMENTS OF THE DESIGNATED WALL/PARTITION/BARRIER ASSEMBLIES (INCLUDING PROPER LABELS) SHALL BE REPLACED.


XAVIER SALAS
NCARB AIA | LEED AP
AR 98387
561.699.7472
xsalas.com

20 Forest Hills Ln
Boca Raton, FL 33431


**PROJECT**
FIVE STAR EDUCATION

**PROJECT ADDRESS**
2390 S. MILITARY TRAIL
PALM SPRINGS, FL
33415

**CLIENT**
FIVE STAR EDUCATION

**CONSULTANTS**

**REGISTRATION**
XAVIER SALAS
NCARB AIA | LEED AP
AR 98387

STATE OF FLORIDA · XAVIER SALAS · AR98387 · REGISTERED ARCHITECT

XAVIER SALAS
AR # 98387

**ISSUED FOR:**
SITE PLAN APPLICATION

| REVISIONS/ISSUES | | |
|---|---|---|
| No. | DESCRIPTION | DATE |
| 1 | BLDG. DEP. COMMENTS | 02/09/2021 |

| | |
|---|---|
| **PROJECT NUMBER** | 19008 |
| **PROJECT MANAGER** | XS |
| **DRAWN BY** | YJ |
| **CHECKED BY** | XS |

**SHEET TITLE**
**EXISTING OVERALL FLOOR PLAN**

**SHEET NUMBER**
**A1**

**SHEET OF**


2019 XAVIER SALAS NCARB AIA LEED AP

"IT IS A VIOLATION OF THE LAW FOR ANY PERSON, UNLESS ACTING UNDER THE DIRECTION OF A LICENSED ARCHITECT, TO ALTER THESE PLANS AND SPECIFICATIONS." THIS DOCUMENT CONTAINS PROPERTY INFORMATION AND SHALL NOT BE USED OR REPRODUCED, OR ITS CONTENTS DISCLOSED, IN WHOLE OR IN PART, WITHOUT THE PRIOR WRITTEN CONSENT OF XAVIER SALAS NCARB AIA - LEED AP - COPYRIGHT 2019

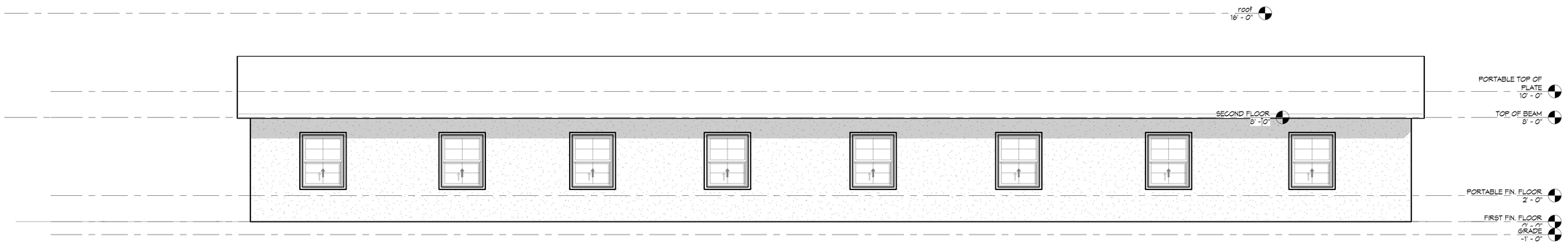


**1** **EXISTING EAST ELEVATION - BUILDING 'A'**
1/4" = 1'-0"

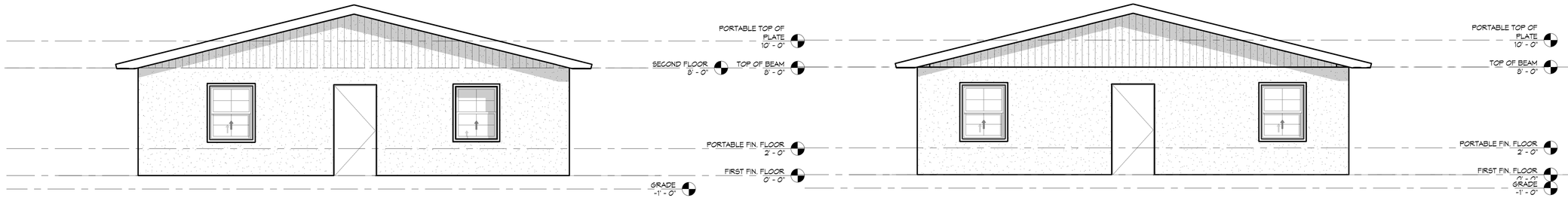


**3** **EXISTING SOUTH ELEVATION - BUILDING 'A'**
1/4" = 1'-0"

**2** **EXISTING NORTH ELEVATION - BUILDING 'A'**
1/4" = 1'-0"

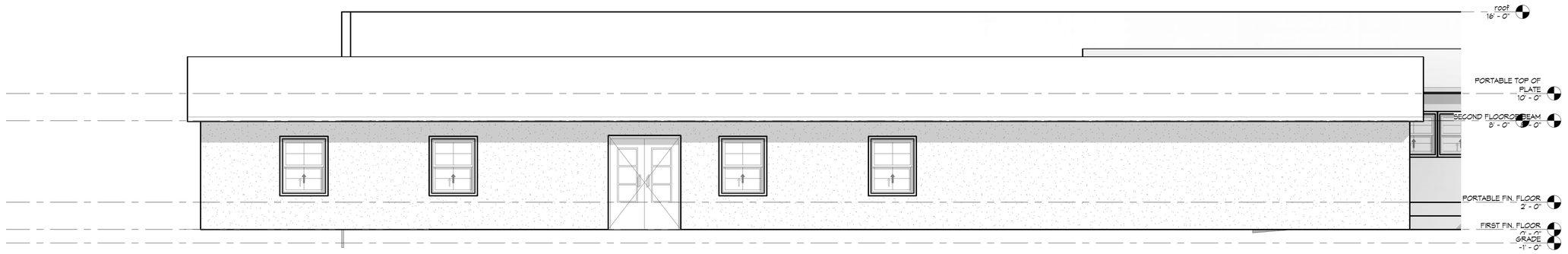


**4** **EXISTING WEST ELEVATION - BUILDING 'A'**
1/4" = 1'-0"

XAVIER SALAS
NCARB AIA | LEED AP
AR 98387
561.699.7472
xsalas.com

20 Forest Hills Ln
Boca Raton, FL 33431

**PROJECT**
FIVE STAR EDUCATION

**PROJECT ADDRESS**
2390 S. MILITARY TRAIL
PALM SPRINGS, FL 33415

**CLIENT**
FIVE STAR EDUCATION

**CONSULTANTS**

**REGISTRATION**
XAVIER SALAS
NCARB AIA | LEED AP
AR 98387

STATE OF FLORIDA · XAVIER SALAS · AR98387 · REGISTERED ARCHITECT

XAVIER SALAS
AR # 98387

**ISSUED FOR:**
SITE PLAN APPLICATION

| REVISIONS/ISSUES | | |
|---|---|---|
| No. | DESCRIPTION | DATE |

| | |
|---|---|
| **PROJECT NUMBER** | 19008 |
| **PROJECT MANAGER** | XS |
| **DRAWN BY** | YJ |
| **CHECKED BY** | XS |

**SHEET TITLE**
**ELEVATIONS BUILDING 'A'**

**SHEET NUMBER**
**A2**

**SHEET OF**

IT IS A VIOLATION OF THE LAW FOR ANY PERSON, UNLESS ACTING UNDER THE DIRECTION OF A LICENSED ARCHITECT, TO ALTER THESE PLANS AND SPECIFICATIONS. THIS DOCUMENT CONTAINS PROPERTY INFORMATION AND SHALL NOT BE USED IN WHOLE OR IN PART, WITHOUT THE PRIOR WRITTEN CONSENT OF XAVIER SALAS NCARB AIA - LEED AP COPYRIGHT 2019

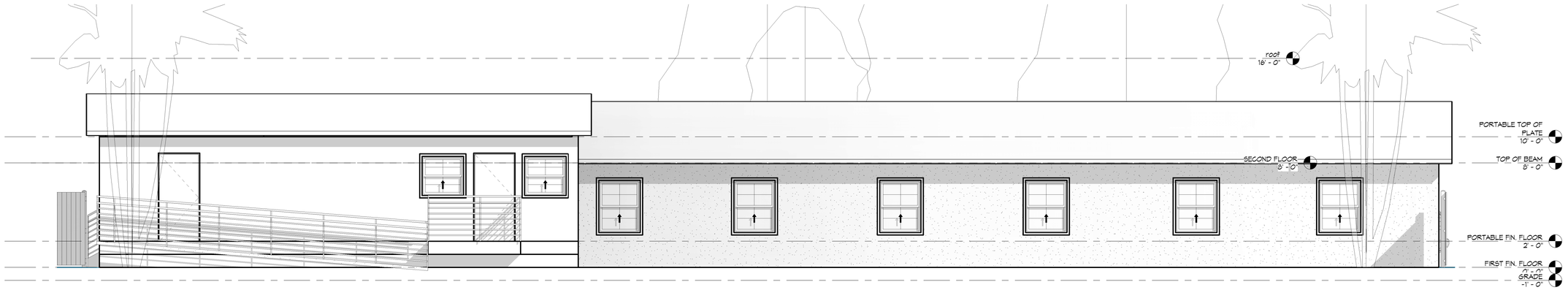


**1 EXISTING EAST ELEVATION - BUILDING 'B'**
1/4" = 1'-0"

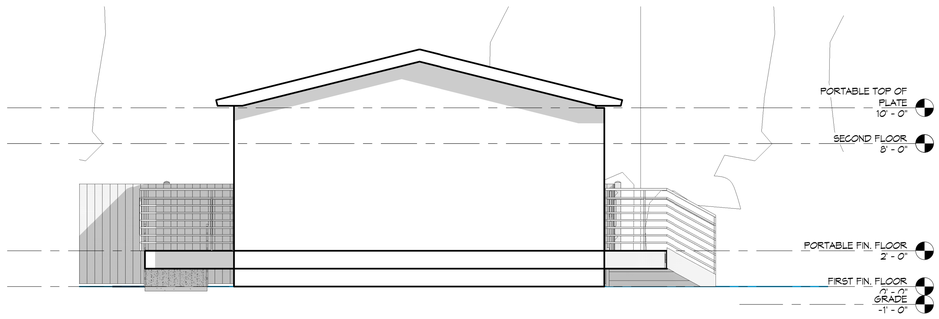


**2 EXISTING NORTH ELEVATION - BUILDING 'B'**
1/4" = 1'-0"

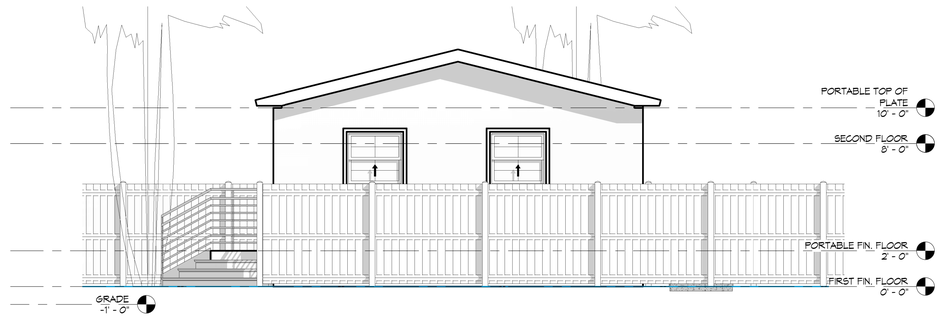


**3 EXISTING SOUTH ELEVATION - BUILDING 'B'**
1/4" = 1'-0"

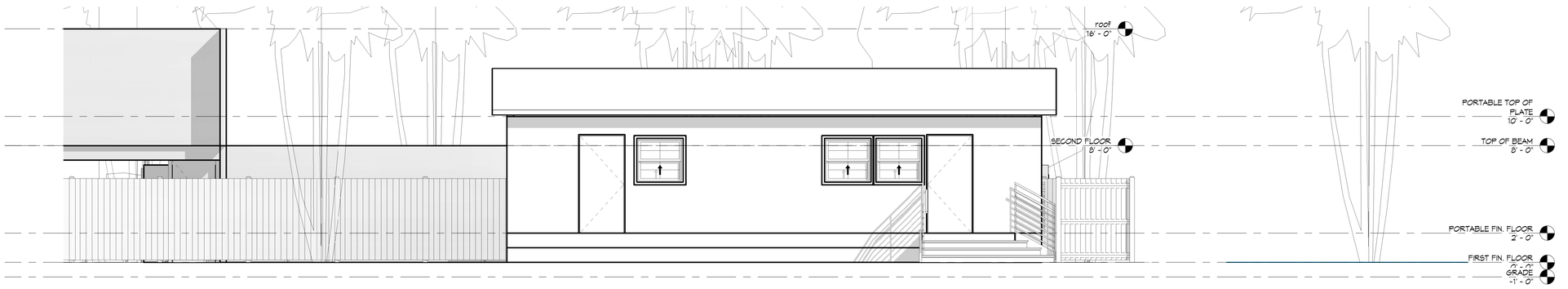


**4 EXISTING WEST ELEVATION - BUILDING 'B'**
1/4" = 1'-0"

XAVIER SALAS
NCARB AIA | LEED AP
AR 98387
561.699.7472
xsalas.com

20 Forest Hills Ln
Boca Raton, FL 33431

**PROJECT**
FIVE STAR EDUCATION

**PROJECT ADDRESS**
2390 S. MILITARY TRAIL
PALM SPRINGS, FL 33415

**CLIENT**
FIVE STAR EDUCATION

**CONSULTANTS**

**REGISTRATION**
XAVIER SALAS
NCARB AIA | LEED AP
AR 98387

STATE OF FLORIDA · XAVIER SALAS · AR98387 · REGISTERED ARCHITECT

XAVIER SALAS
AR # 98387

**ISSUED FOR:**
SITE PLAN APPLICATION

| REVISIONS/ISSUES | | |
|---|---|---|
| No. | DESCRIPTION | DATE |

| | |
|---|---|
| **PROJECT NUMBER** | 19008 |
| **PROJECT MANAGER** | XS |
| **DRAWN BY** | YJ |
| **CHECKED BY** | XS |

**SHEET TITLE**
**ELEVATIONS BUILDING 'B'**

**SHEET NUMBER**
**A3**

**SHEET OF**

"IT IS A VIOLATION OF THE LAW FOR ANY PERSON, UNLESS ACTING UNDER THE DIRECTION OF A LICENSED ARCHITECT, TO ALTER THESE PLANS AND SPECIFICATIONS." THIS DOCUMENT CONTAINS PROPRIETARY INFORMATION AND SHALL NOT BE USED OR REPRODUCED, IN WHOLE OR IN PART, WITHOUT THE PRIOR WRITTEN CONSENT OF XAVIER SALAS NCARB AIA - LEED AP COPYRIGHT 2019

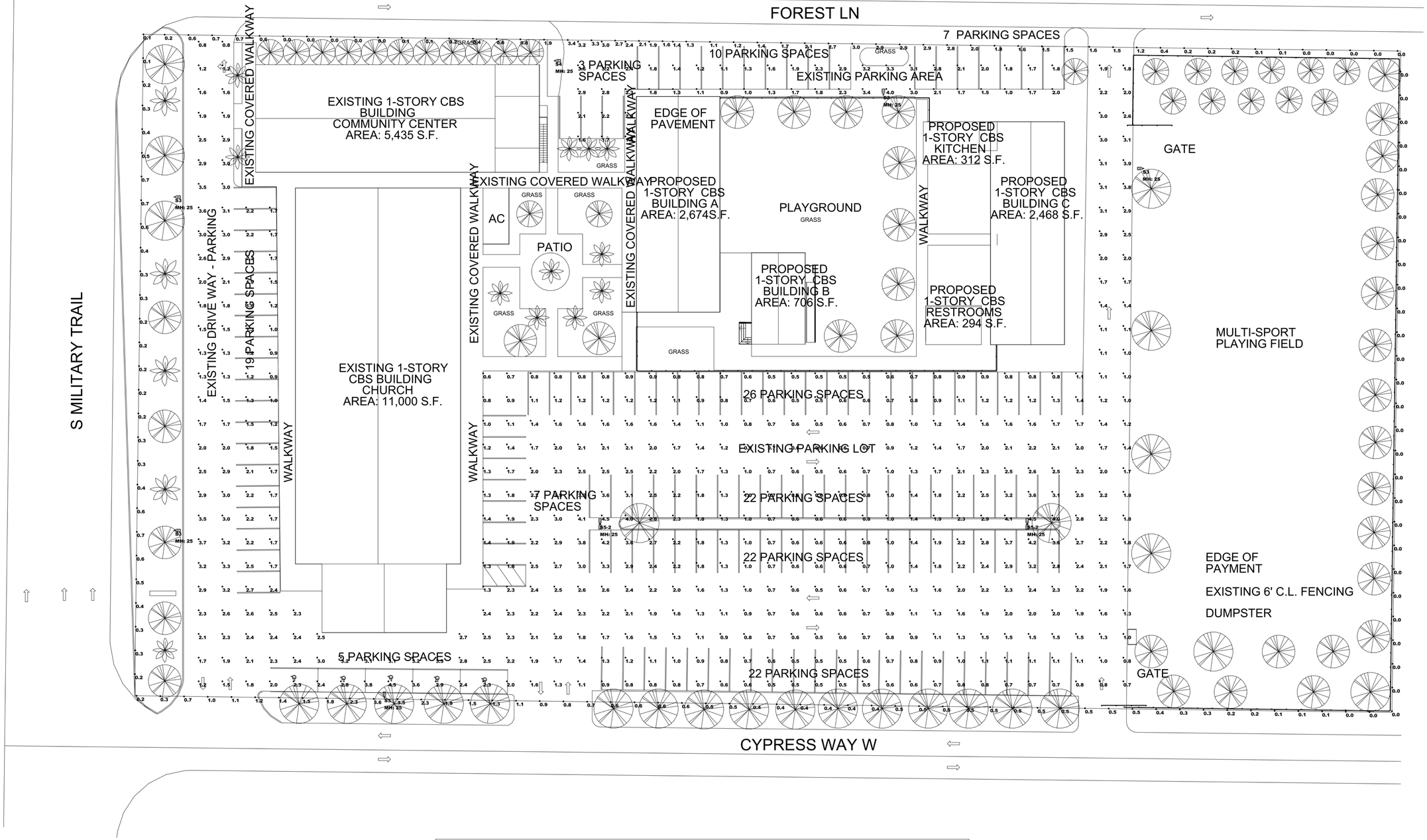


**LUMINAIRE SCHEDULE**

| SYMBOL | QTY | LABEL | ARRANGEMENT | MANUFACTURER | DESCRIPTION | LUMINAIRE LUMENS | LLF | LUMINAIRE WATTS | ASSEMBLY WATTS |
|---|---|---|---|---|---|---|---|---|---|
| | 5 | S3 | SINGLE | Lithonia Lighting | DSX1 LED P7 40K T3M MVOLT | 20139 | 0.900 | 183 | 183 |
| | 1 | S4 | SINGLE | Lithonia Lighting | DSX1 LED P7 40K T4M MVOLT | 20204 | 0.900 | 183 | 183 |
| | 2 | S5-2 | BACK-BACK | Lithonia Lighting | DSX1 LED P7 40K T5W MVOLT | 21362 | 0.900 | 183 | 366 |

**CALCULATION SUMMARY**

| LABEL | CALC TYPE | UNITS | AVG | MAX | MIN | AVG/MIN | MAX/MIN |
|---|---|---|---|---|---|---|---|
| PARKING & DRIVE | Illuminance | Fc | 1.73 | 4.5 | 0.5 | 3.46 | 9.00 |
| PROPERTY LINE | Illuminance | Fc | 0.69 | 3.6 | 0.0 | N.A. | N.A. |

1 **PHOTOMETRIC PLAN**
1" = 30'-0"


XAVIER SALAS
NCARB AIA | LEED AP
AR 98387
561.699.7472
xsalas.com

20 Forest Hills Ln
Boca Raton, FL 33431


**PROJECT**
FIVE STAR EDUCATION

**PROJECT ADDRESS**
2390 S. MILITARY TRAIL
PALM SPRINGS, FL 33415

**CLIENT**
FIVE STAR EDUCATION

**CONSULTANTS**

**REGISTRATION**
XAVIER SALAS
NCARB AIA | LEED AP
AR 98387

STATE OF FLORIDA · XAVIER SALAS · AR98387 · REGISTERED ARCHITECT

XAVIER SALAS
AR # 98387

**ISSUED FOR:**
SITE PLAN APPLICATION

**REVISIONS/ISSUES**

| No. | DESCRIPTION | DATE |
|---|---|---|

**PROJECT NUMBER** 19008
**PROJECT MANAGER** XS
**DRAWN BY** YJ
**CHECKED BY** XS

**SHEET TITLE**
**PHOTOMETRIC PLAN**

**SHEET NUMBER**
**A4**

**SHEET OF**


"IT IS A VIOLATION OF THE LAW FOR ANY PERSON, UNLESS ACTING UNDER THE DIRECTION OF A LICENSED ARCHITECT, TO ALTER THESE PLANS AND SPECIFICATIONS." THIS DOCUMENT CONTAINS PROPRIETARY INFORMATION AND SHALL NOT BE USED OR REPRODUCED, OR ITS CONTENTS DISCLOSED, IN WHOLE OR IN PART, WITHOUT THE PRIOR WRITTEN CONSENT OF XAVIER SALAS NCARB AIA - LEED AP. COPYRIGHT 2019

## DESCRIPTION

LOTS 16 THROUGH 33, INCLUSIVE AND THE WESTERLY 18 FEET OF LOTS 15 AND 34, BLOCK 3, LESS THE WEST 7 FEET OF LOT 23, 24, 25, 26, BLOCK 3, ANNA-JOHNS ESTATES, ACCORDING TO THE MAP OR PLAT THEREOF AS RECORDED IN PLAT BOOK 23, PAGE 219, PUBLIC RECORDS OF PALM BEACH COUNTY, FLORIDA.
CONTAINING 139049 SQUARE FEET MORE OR LESS.

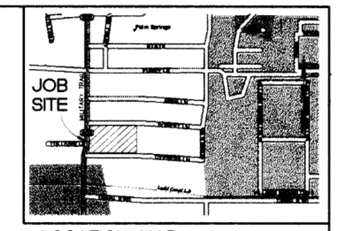


LOCATION MAP NOT TO SCALE

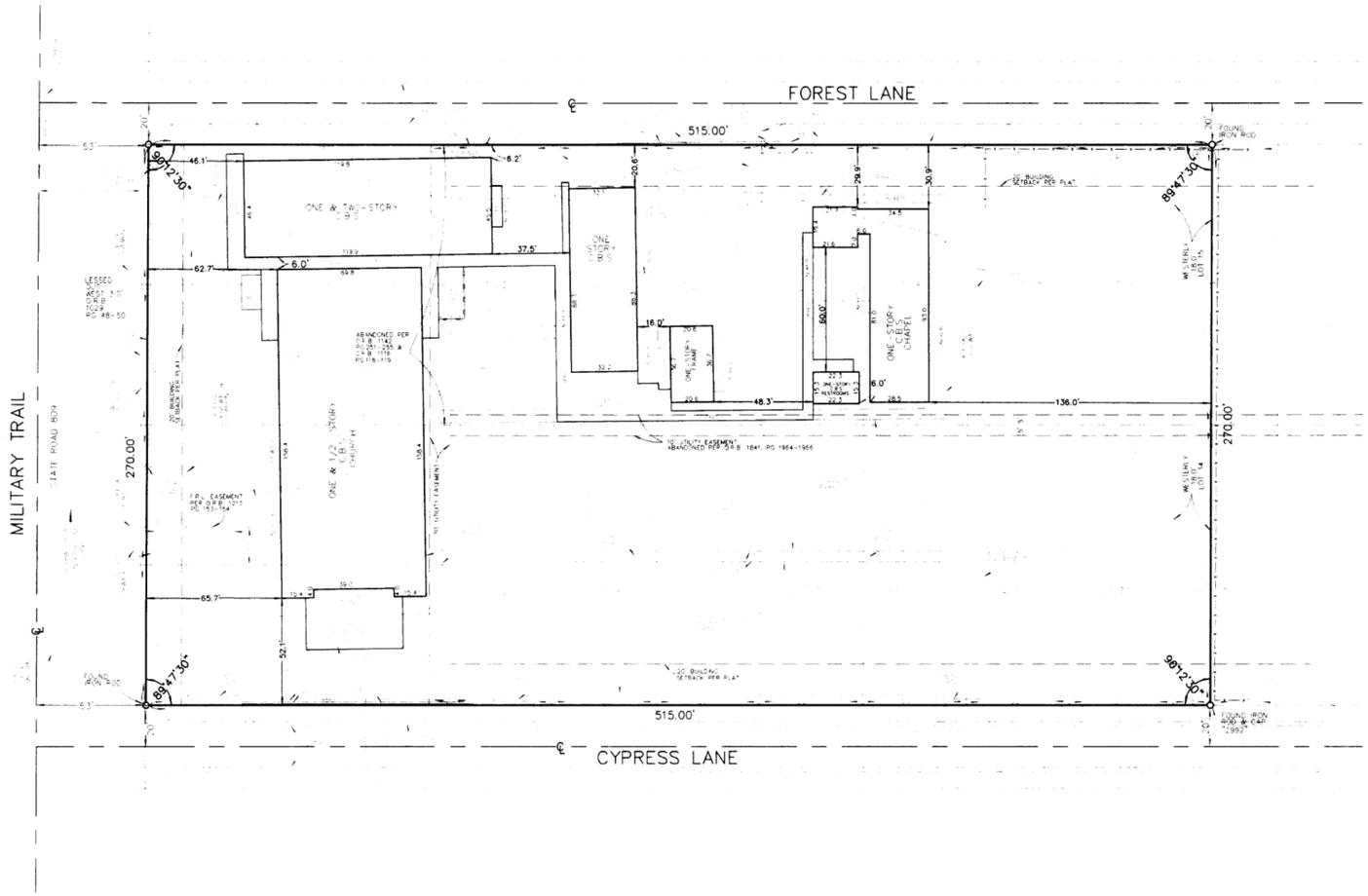


NOTE:
INFORMATION REGARDING RECORD EASEMENTS, ADJOINER, AND OTHER DOCUMENT THAT MIGHT AFFECT THE QUALITY OF TITLE TO TRACT SHOWN HEREON WAS GAINED FROM FUND FILE NUMBER 06-2000-5046, ISSUED BY ATTORNEYS' TITLE INSURANCE FUND, INC. DATED APRIL 25, 2000. NO SEARCH OF THE PUBLIC RECORDS HAS BEEN MADE BY THIS OFFICE.

SCHEDULE B EXCEPTIONS

6. EASEMENT CONTAINED IN INSTRUMENT RECORDED DEED BOOK 703, PAGE 75, PUBLIC RECORDS OF PALM BEACH COUNTY, FLORIDA. "NOT SHOWN AS LEGAL DOES NOT PROVIDE DETAIL LOCATION OF EASEMENT."

7. RESTRICTIONS, CONDITIONS, RESERVATIONS, EASEMENTS, AND OTHER MATTERS CONTAINED ON THE PLAT OF ANNA-JOHNS ESTATES, AS RECORDED IN PLAT BOOK 23, PAGE 219, AS AFFECTED BY QUIT-CLAIM DEED RECORDED DEED BOOK 1116, PAGE 118 AND RESOLUTION RECORDED IN DEED BOOK 1142, PAGE 251 AND RELEASE OF EASEMENT RECORDED IN DEED BOOK 1142, PAGE 254 AND ALSO BY RESOLUTION RECORDED IN OFFICIAL RECORD BOOK 1841, PAGE 1964, PUBLIC RECORDS OF PALM BEACH COUNTY, FLORIDA. "SHOWN ON SURVEY"

8. EASEMENT TO FLORIDA POWER & LIGHT COMPANY RECORDED IN OFFICIAL RECORD BOOK 1213, PAGE 153, PUBLIC RECORDS OF PALM BEACH COUNTY, FLORIDA. "SHOWN ON SURVEY"

CERTIFIED TO:
ATTORNEYS' TITLE INSURANCE FUND, INC.
LOVE TABERNACLE ASSEMBLY OF GOD OF PALM BEACH, INC., A FLORIDA CORPORATION
ASSEMBLIES OF GOD FINANCIAL SERVICES GROUP, A MISSOURI CORPORATION
NASON, YEAGER, GERSON, WHITE & LIOCE, P.A.
W. MORGAN SPEER, P.A.

I FURTHER CERTIFY THAT:
THE ACCOMPANYING SURVEY WAS MADE ON THE GROUND AND CORRECTLY SHOWS THE LOCATION OF ALL BUILDINGS, STRUCTURES AND OTHER IMPROVEMENTS SITUATED ON THE ABOVE PREMISES; AND THAT THE PROPERTY DESCRIBED HEREON IS THE PROPERTY DESCRIBED IN ATTORNEYS' TITLE INSURANCE FUND, INC. COMMITMENT NUMBER OF-148423, DATED APRIL 25, 2000 AT 11:00 pm AND THAT ALL EASEMENTS, COVENANTS AND RESTRICTIONS REFERENCED IN SAID TITLE COMMITMENT HAVE BEEN PLOTTED HEREON OR OTHERWISE NOTED AS TO THEIR EFFECT ON THE SUBJECT PROPERTY, THAT THERE ARE NO BUILDING ENCROACHMENTS ON THE SUBJECT PROPERTY OR UPON ADJACENT LAND ABUTTING SAID PROPERTY UNLESS SHOWN HEREON.

PROPERTY SHOWN HEREON IS LOCATED IN FLOOD ZONE B & C PER FLOOD INSURANCE RATE MAP 12C192 0165 B DATED OCTOBER 15, 1982

2390 S. Military Trail

LEGEND:
℄ = CENTERLINE
O.H.E. = OVERHEAD ELECTRIC
A/C = AIR CONDITIONER ON CONCRETE
O.R.B. = OFFICIAL RECORD BOOK
PG. = PAGE

NOTE: 1. THIS SURVEY COMPLIES WITH CHAPTER 61G17-6, FLORIDA ADMINISTRATION CODE.
2. NO SEARCH OF THE PUBLIC RECORDS HAS BEEN MADE BY THIS OFFICE.
3. THIS SURVEY IS NOT VALID UNLESS EMBOSSED WITH SURVEYORS SEAL.
4. WRITTEN DIMENSIONS TAKE PRECEDENCE OVER SCALED DIMENSIONS.
5. LEGAL DESCRIPTION SUPPLIED BY CLIENT.
6. DIMENSIONS SHOWN HEREON BETWEEN HOUSE CORNERS AND PROPERTY LINES ARE NOT TO BE USED FOR ANY CONSTRUCTION PURPOSES.
7. VISIBLE ENCROACHMENTS, IF ANY ARE AS SHOWN.
8. ELEVATIONS HEREON BASED ON N.G.V.D.(1929)
9. BEARINGS HEREON BASED ON PLAT

ROBERT J. DEARLOVE
PROFESSIONAL SURVEYOR AND MAPPER
CERTIFICATE NO. 3938
STATE OF FLORIDA

Dearlove & Associates
LAND SURVEYORS
450 S. OLD DIXIE HWY.
JUPITER, FLORIDA 33458
561-746-8745
FAX 561-746-9632

**Boundary Survey & Site Plan**

Prepared For: LOVE TABERNACLE ASSEMBLY OF GOD

| Scale 1"= 30' | Date Of Survey MAY 31, 2000 | Drawing Number 00-198 |
|---|---|---|
| Drawn by RES | | F.B. 128 Pg. 21 |
| | | Approved by: R.D. |


XAVIER SALAS
NCARB AIA | LEED AP
AR 98387
561.699.7472
xsalas.com

20 Forest Hills Ln
Boca Raton, FL 33431


**PROJECT**
FIVE STAR EDUCATION

**PROJECT ADDRESS**
2390 S. MILITARY TRAIL
PALM SPRINGS, FL 33415

**CLIENT**
FIVE STAR EDUCATION

**CONSULTANTS**

**REGISTRATION**
XAVIER SALAS
NCARB AIA | LEED AP
AR 98387

STATE OF FLORIDA · XAVIER SALAS · AR98387 · REGISTERED ARCHITECT

XAVIER SALAS
AR # 98387

**ISSUED FOR:**
SITE PLAN APPLICATION

| REVISIONS/ISSUES | | |
|---|---|---|
| No. | DESCRIPTION | DATE |

| | |
|---|---|
| **PROJECT NUMBER** | 19008 |
| **PROJECT MANAGER** | XS |
| **DRAWN BY** | YJ |
| **CHECKED BY** | XS |

**SHEET TITLE**
**SURVEY & SITE PLAN**

**SHEET NUMBER**
**ASP2**

**SHEET OF**


2019 XAVIER SALAS NCARB AIA LEED AP

IT IS A VIOLATION OF THE LAW FOR ANY PERSON, UNLESS ACTING UNDER THE DIRECTION OF A LICENSED ARCHITECT, TO ALTER THESE PLANS AND SPECIFICATIONS. THIS DOCUMENT CONTAINS PROPRIETARY INFORMATION AND SHALL NOT BE USED OR REPRODUCED, IN WHOLE OR IN PART, WITHOUT THE PRIOR WRITTEN CONSENT OF XAVIER SALAS NCARB AIA - LEED AP - COPYRIGHT 2019

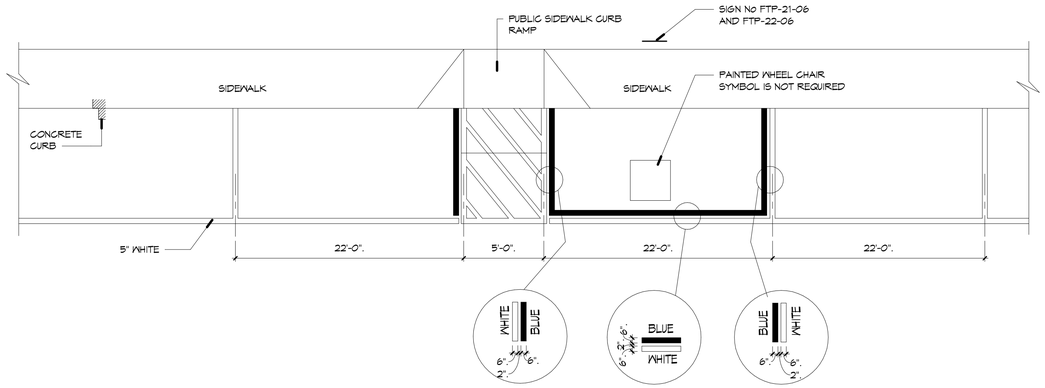


NOTES:
DIMENSIONS ARE TO THE CENTERLINE OF MARKINGS.
AN ACCESS AISLE IS REQUIRED FOR EACH ACCESSIBLE APACE WHEN ANGLE PARKING IS USED.
CRITERIA FOR PAVEMENT MARKINGS ONLY, NOT PUBLIC SIDEWALK CURB RAMP LOCATIONS. FOR RAMP LOCATIONS REFER TO PLANS.
BLUE PAVEMENT MARKINGS SHALL BE TINTED TO MATCH SHADE 15180 OF FEDERAL STANDARS 595a.
THE FTP-22-06 PANAL SHALL BE MOUNTED BELOW THE FTP-21-06 SIGN.

## 7 ACCESIBLE PARKING SPACES TO COMPLY 2017 - HORIZONTAL

3/8" = 1'-0"

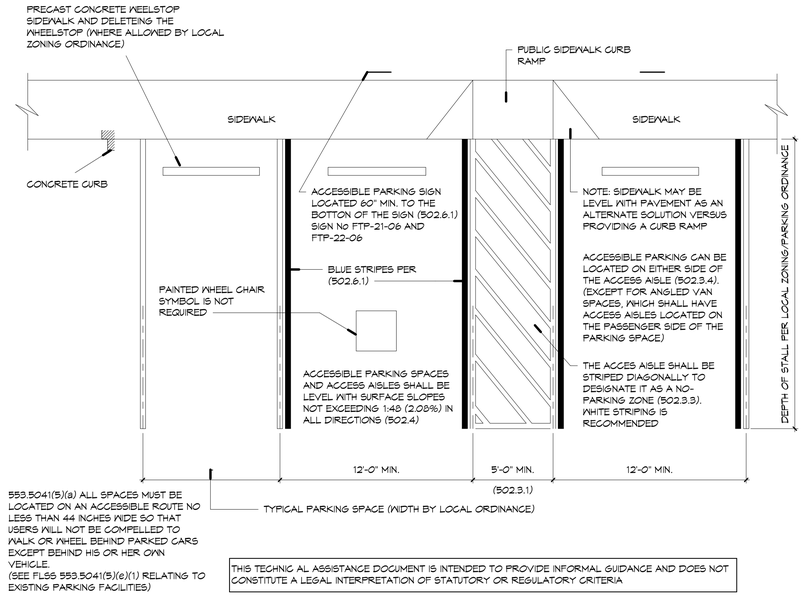


THIS TECHNIC AL ASSISTANCE DOCUMENT IS INTENDED TO PROVIDE INFORMAL GUIDANCE AND DOES NOT CONSTITUTE A LEGAL INTERPRETATION OF STATUTORY OR REGULATORY CRITERIA

## 1 ACCESIBLE PARKING SPACES TO COMPLY WITH 2017 -

3/8" = 1'-0"

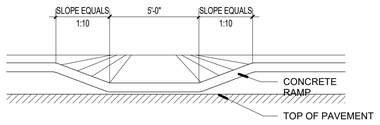


## 6 PEDESTRIAN RAMP

1/4" = 1'-0"

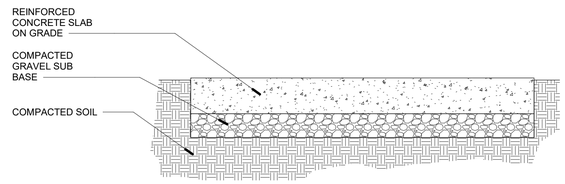


## 5 CONCRETE WALKWAY DETAIL

1 1/2" = 1'-0"

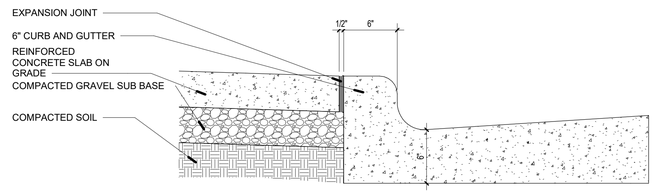


## 4 CONCRETE CURB DETAIL

1 1/2" = 1'-0"

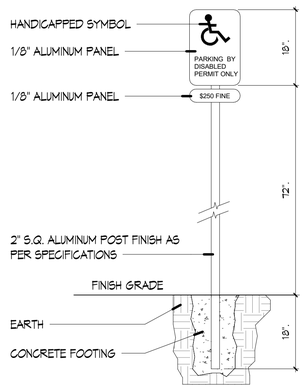


## 3 DISABLE PARKING SIGNAGE

3/16" = 1'-0"

MATERIAL NOTES:
1. ALUMINUM - ALLOY 6061-T6 (ASTM B209, B221, OR B308).
2. SIGN PANEL - MIN. 0.080" THICK ALUMINUM.
3. BACKER PLATE - MIN. 0.100" THICK ALUMINUM.
4. FASTENER MATERIAL - ALUMINUM - BOLT PER ASTM F468, ALLOY 2042-T4 WITH MIN. 0.0002" THK ANODIC COATING AND CHROMATE SEALED. NUT PER ASTM F467, ALLOY 6061-T6 OR 6262-T9, LOCKWASHER PER ASTM B221, ALLOY 7075-T6.
5. ALTERNATE FASTENER MATERIAL - STAINLESS STEEL - PER ASTM F593 (BOLT) AND F594 (NUT), ALLOY GROUP 2 CONDITION CW2.
6. BOLT - 3/8" DIA, 24 UNF THREAD, BUTTON HEAD CAP SCREW.
7. LOCKWASHER - 3/8" DIA, SPLIT LOCK WASHER.
8. NUT - 3/8"DIA, 24 UNF THREAD, FINISHED HEX NUT.
9. ALTERNATE NUT - INSTEAD OF LOCKWASHER AND NUT -USE NYLON INSERT LOCK NUT.

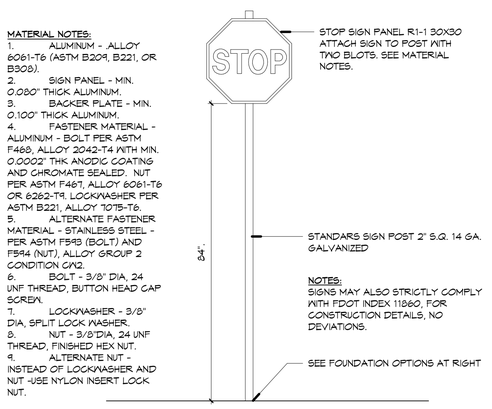


TYPICAL ELEVATION VIEW

## 2 TYPICAL STOP SIGN DETAIL

3/16" = 1'-0"

NOTES:
1. THIS METHOD MUST BE SEPARATED FROM THE NEAREST EDGE OF PAVEMENT BY AT LEAST 16 INCHES.
2. USE DRIVE CAP WHEN DRIVING FOUNDATION POST.

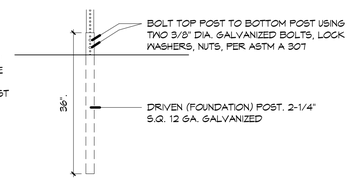


NOTES:
1. THIS METHOD USED IN GRASS AREAS, LANDSCAPE AREAS, ASPHALT PAVED AREAS WHEN POST IS WITHIN 16 INCHES OF THE PAVEMENT EDGE AND SIDEWALKS.
2. NOTE DIFFERENT DIMENSIONS FOR SIDEWALK INSTALLATION.
3. USE 3,000 PSI COMP. STRENGTH CONC., MIN.

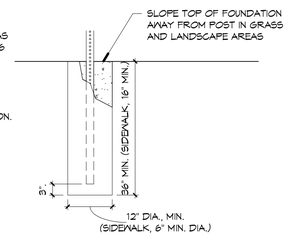


CONCRETE FOUNDATION

XAVIER SALAS
NCARB AIA | LEED AP
AR 98387
561.699.7472
xsalas.com

20 Forest Hills Ln
Boca Raton, FL 33431

**PROJECT**
FIVE STAR EDUCATION

**PROJECT ADDRESS**
2390 S. MILITARY TRAIL
PALM SPRINGS, FL 33415

**CLIENT**
FIVE STAR EDUCATION

**CONSULTANTS**

**REGISTRATION**
XAVIER SALAS
NCARB AIA | LEED AP
AR 98387

STATE OF FLORIDA · XAVIER SALAS · AR98387 · REGISTERED ARCHITECT

XAVIER SALAS
AR # 98387

**ISSUED FOR:**
SITE PLAN APPLICATION

| REVISIONS/ISSUES | | |
|---|---|---|
| No. | DESCRIPTION | DATE |

| | |
|---|---|
| **PROJECT NUMBER** | 19008 |
| **PROJECT MANAGER** | XS |
| **DRAWN BY** | YJ |
| **CHECKED BY** | XS |

**SHEET TITLE**
**SITE DETAILS**

**SHEET NUMBER**
**ASP3**

**SHEET OF**

2019 XAVIER SALAS NCARB AIA LEED AP

"IT IS A VIOLATION OF THE LAW FOR ANY PERSON, UNLESS ACTING UNDER THE DIRECTION OF A LICENSED ARCHITECT, TO ALTER THESE PLANS AND SPECIFICATIONS." THIS DOCUMENT CONTAINS PROPERTY INFORMATION AND SHALL NOT BE USED OR REPRODUCED, OR ITS CONTENTS DISCLOSED, IN WHOLE OR IN PART, WITHOUT THE PRIOR WRITTEN CONSENT OF XAVIER SALAS NCARB AIA - LEED AP - COPYRIGHT 2019

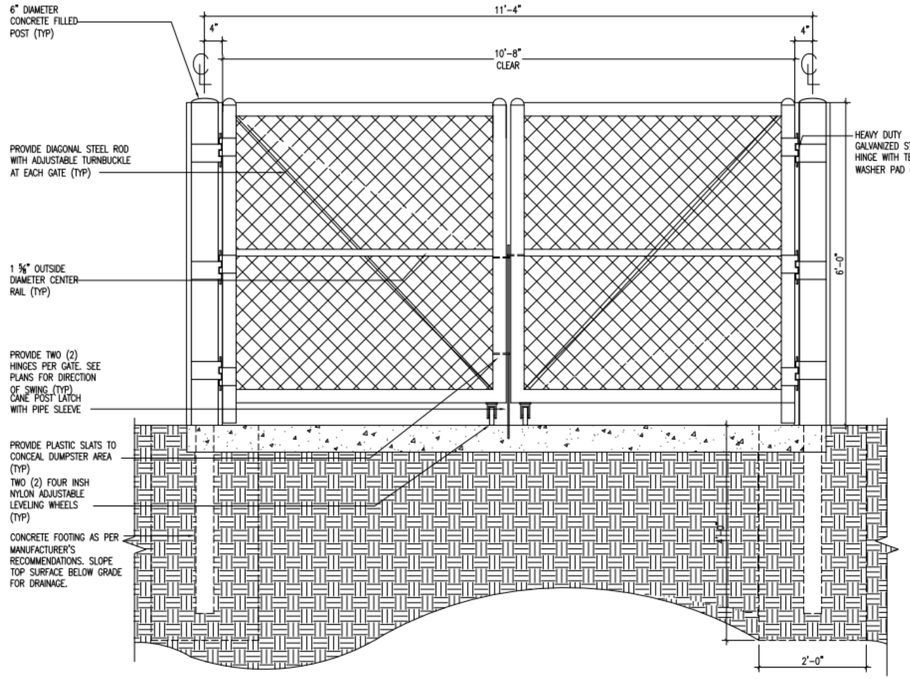


**1 DUMPSTER GATE DETAIL TYP.**
1/8" = 1'-0"

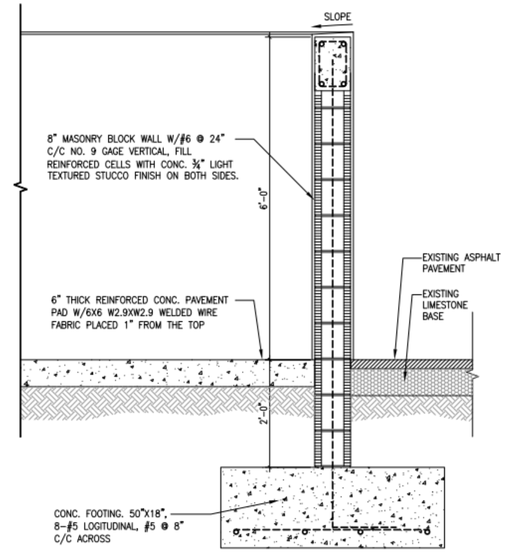


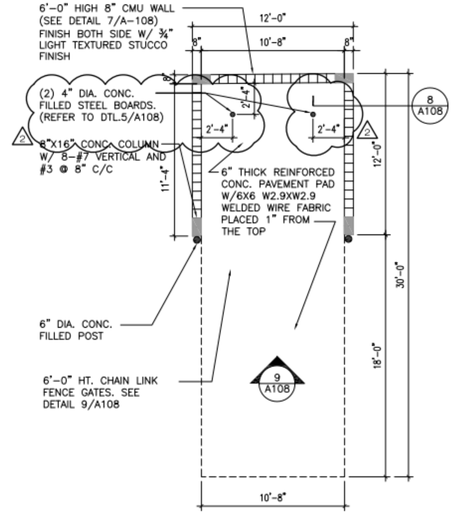


XAVIER SALAS
NCARB AIA | LEED AP
AR 98387
561.699.7472
xsalas.com

20 Forest Hills Ln
Boca Raton, FL 33431

**PROJECT**
FIVE STAR EDUCATION

**PROJECT ADDRESS**
2390 S. MILITARY TRAIL
PALM SPRINGS, FL 33415

**CLIENT**
FIVE STAR EDUCATION

**CONSULTANTS**

**REGISTRATION**
XAVIER SALAS
NCARB AIA | LEED AP
AR 98387

STATE OF FLORIDA · XAVIER SALAS · AR98387 · REGISTERED ARCHITECT
XAVIER SALAS
AR # 98387

**ISSUED FOR:**
SITE PLAN APPLICATION

| REVISIONS/ISSUES | | |
|---|---|---|
| No. | DESCRIPTION | DATE |
| 1 | BLDG. DEP. COMMENTS | 02/09/2021 |

| | |
|---|---|
| **PROJECT NUMBER** | 19008 |
| **PROJECT MANAGER** | Designer |
| **DRAWN BY** | Author |
| **CHECKED BY** | Checker |

**SHEET TITLE**
**SITE DETAILS**

**SHEET NUMBER**
**ASP4**

**SHEET** **OF**

"IT IS A VIOLATION OF THE LAW FOR ANY PERSON, UNLESS ACTING UNDER THE DIRECTION OF A LICENSED ARCHITECT, TO ALTER THESE PLANS AND SPECIFICATIONS." THIS DOCUMENT CONTAINS PROPERTY INFORMATION AND SHALL NOT BE USED OR REPRODUCED, IN WHOLE OR IN PART, WITHOUT THE PRIOR WRITTEN CONSENT OF XAVIER SALAS NCARB AIA - LEED AP COPYRIGHT 2019

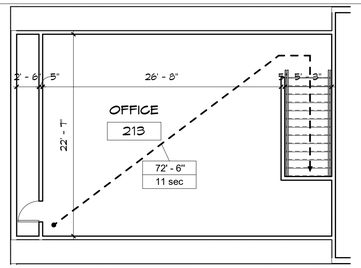


5 **LIFE SAFETY SECOND FLOOR PLAN**
1/8" = 1'-0"

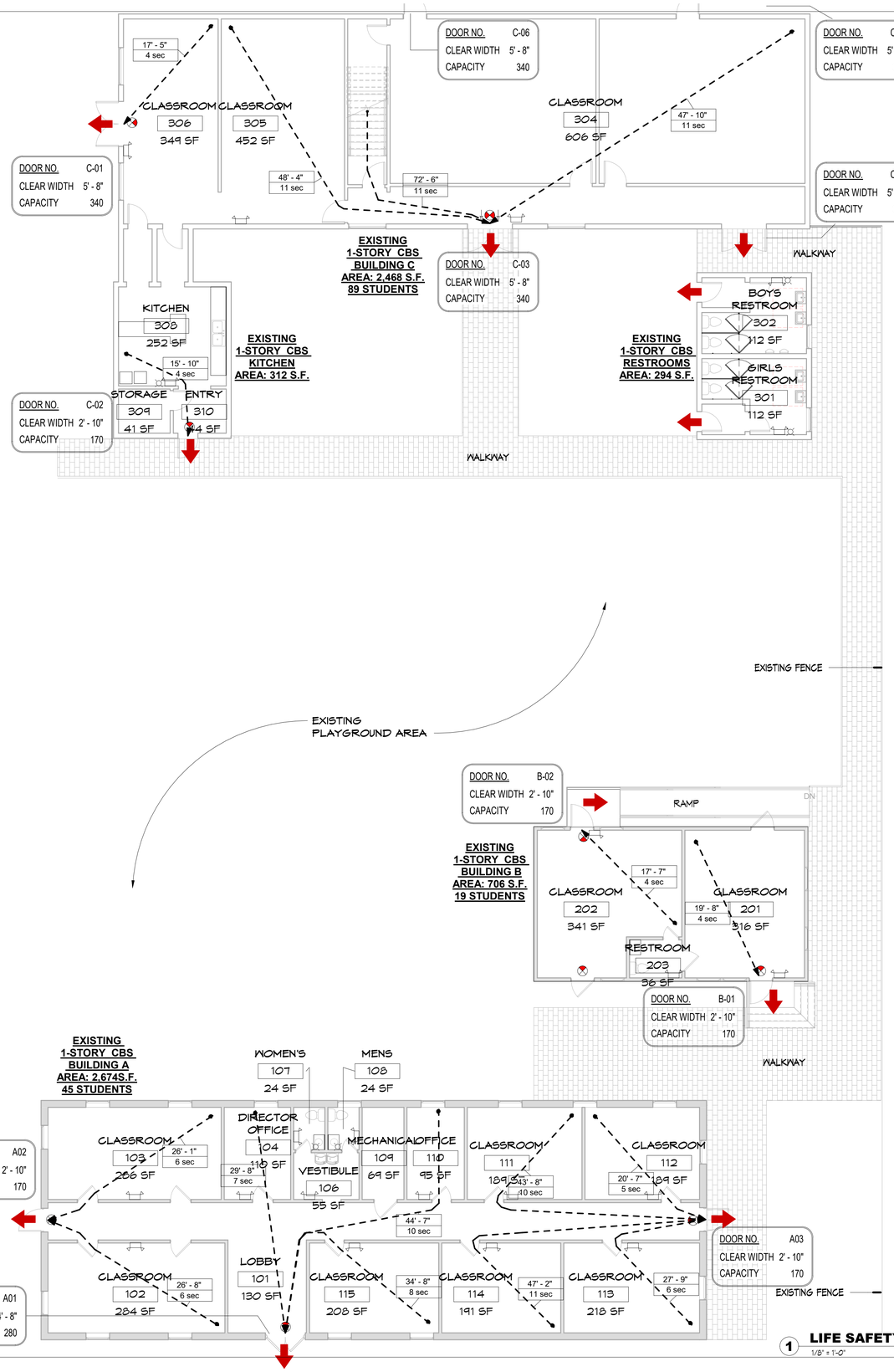


1 **LIFE SAFETY FIRST FLOOR PLAN**
1/8" = 1'-0"

## LIFE SAFETY GENERAL NOTES

1. THE LIFE SAFETY PLANS ARE DIAGRAMMATIC ONLY. THEIR PURPOSE IS SOLELY TO REPRESENT THE LIFE SAFETY COMPONENTS FOR THE PROJECT (AS INCLUDED IN THE CONSTRUCTION DOCUMENTS PREPARED BY THE ARCHITECT, ELECTRICAL ENGINEER, FIRE PROTECTION ENGINEER, ETC). THE CONTRACTOR SHALL USE THE CONSTRUCTION DOCUMENTS (NOT THE LIFE SAFETY PLANS) FOR THE IMPLEMENTATION OF THE REQUIRED LIFE SAFETY COMPONENTS INTO THE PROJECT.

2. THE CONTRACTOR SHALL MAINTAIN ALL MEANS OF EGRESS FOR THE DURATION OF DEMOLITION / CONSTRUCTION. THE CONTRACTOR SHALL PROVIDE FIRE RATED TEMPORARY PARTITIONS, AND COVERED WALKS TO MAINTAIN EGRESS AND SAFE PASSAGE FROM THE BUILDING TO THE PUBLIC WAY AND AS REQUIRED BY AUTHORITY HAVING JURISDICTION.

3. THE CONTRACTOR SHALL PROVIDE TEMPORARY PROTECTION WHILE WORKING IN THE SPACES BELOW OR ABOVE THE AREA OF DEMOLITION / CONSTRUCTION.

4. THE CONTRACTOR SHALL PROVIDE BARRIERS, TEMPORARY PARTITIONS TO PROTECT OCCUPANTS FROM PHYSICAL HAZARD AND NOISE DURING DEMOLITION / CONSTRUCTION.

5. THE CONTRACTOR SHALL ADVISE THE ARCHITECT IMMEDIATELY UPON DISCOVERY OF ANY LIFE SAFETY COMPONENT THAT IS SHOWN ON THE LIFE SAFETY PLANS BUT HAS NOT BEEN INCLUDED IN THE CONSTRUCTION DOCUMENTS PREPARED BY THE ARCHITECT, ELECTRICAL ENGINEER, FIRE PROTECTION ENGINEER, ETC.

6. THE CONTRACTOR SHALL STENCIL PAINTED SIGNS IN RED LETTERS ON BOTH SIDES OF ALL FIRE WALLS, ALL RATED FIRE BARRIERS, ALL RATED SMOKE BARRIERS, ALL NON-RATED SMOKE PARTITIONS AND ALL FIRE RATED PARTITIONS. LOCATE BOTTOM OF SIGNS NO MORE THAN 12 INCHES ABOVE REMOVABLE CEILINGS, PER THE REQUIREMENTS OF SPECIFICATION SECTION 099123 - INTERIOR PAINTING.

7. THE EXISTING-TO-REMAIN PORTIONS OF THE BUILDING WERE PROVIDED TO THE ARCHITECT BY THE OWNER. CRAIN ATLANTIS, INC. ARCHITECTS TAKES NO RESPONSIBILITY FOR THEIR ACCURACY BEYOND THE LIMITS OF THE DESIGNATED "SCOPE OF WORK" AS DEFINED ON THE ARCHITECTURAL FLOOR PLANS.

## LIFE SAFETY PLAN LEGEND

- 1 HOUR FIRE RATED PARTITION
- 2 HOURS FIRE RATED PARTITION - EXISTING
- EXIT DISCHARGE
- ETD
- ETD - TRAVEL DISTANCE TO AN EXIT
- CPT - COMMON PATH OF TRAVEL DISTANCE
- DET - DEAD END TRAVEL DISTANCE
- EXIT LIGHT FIXTURE
- BATTERY BACKUP EMERGENCY EXIT/ LIGHT COMBO FIXTURE
- STROBE


XAVIER SALAS
NCARB AIA | LEED AP
AR 98387
561.699.7472
xsalas.com

20 Forest Hills Ln
Boca Raton, FL 33431


**PROJECT**
FIVE STAR EDUCATION

**PROJECT ADDRESS**
2390 S. MILITARY TRAIL
PALM SPRINGS, FL 33415

**CLIENT**
FIVE STAR EDUCATION

**CONSULTANTS**

**REGISTRATION**
XAVIER SALAS
NCARB AIA | LEED AP
AR 98387

STATE OF FLORIDA · XAVIER SALAS · AR98387 · REGISTERED ARCHITECT
XAVIER SALAS
AR # 98387

**ISSUED FOR:**
SITE PLAN APPLICATION

| REVISIONS/ISSUES | | |
|---|---|---|
| No. | DESCRIPTION | DATE |
| 1 | BLDG. DEP. COMMENTS | 02/09/2021 |

| | |
|---|---|
| PROJECT NUMBER | 19008 |
| PROJECT MANAGER | XS |
| DRAWN BY | YJ |
| CHECKED BY | XS |

**SHEET TITLE**
**EXISTING LIFE SAFETY PLAN**

**SHEET NUMBER**
**LS101** 1

SHEET OF


"IT IS A VIOLATION OF THE LAW FOR ANY PERSON, UNLESS ACTING UNDER THE DIRECTION OF A LICENSED ARCHITECT, TO ALTER THESE PLANS AND SPECIFICATIONS." THIS DOCUMENT CONTAINS PROPRIETARY INFORMATION AND SHALL NOT BE USED OR REPRODUCED, OR ITS CONTENTS DISCLOSED, IN WHOLE OR IN PART, WITHOUT THE PRIOR WRITTEN CONSENT OF XAVIER SALAS NCARB AIA - LEED AP - COPYRIGHT 2019

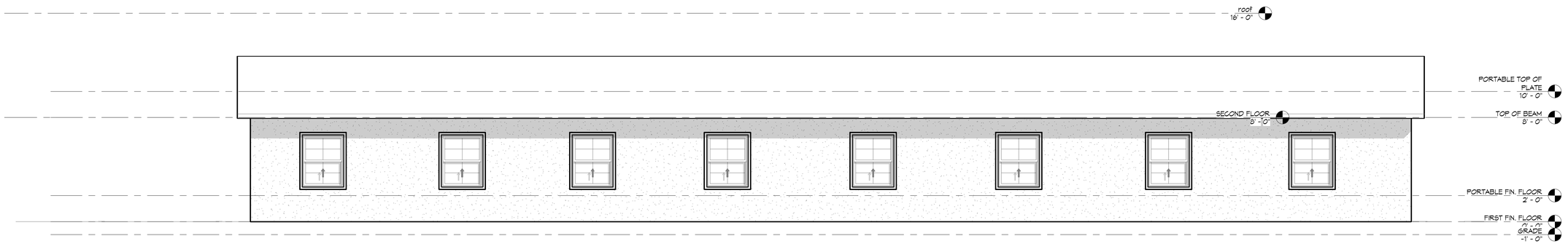


**1** **EXISTING EAST ELEVATION - BUILDING 'A'**
1/4" = 1'-0"

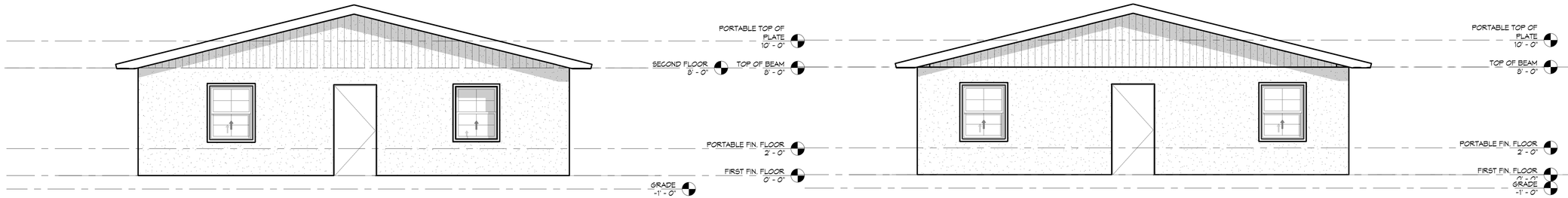


**3** **EXISTING SOUTH ELEVATION - BUILDING 'A'**
1/4" = 1'-0"

**2** **EXISTING NORTH ELEVATION - BUILDING 'A'**
1/4" = 1'-0"

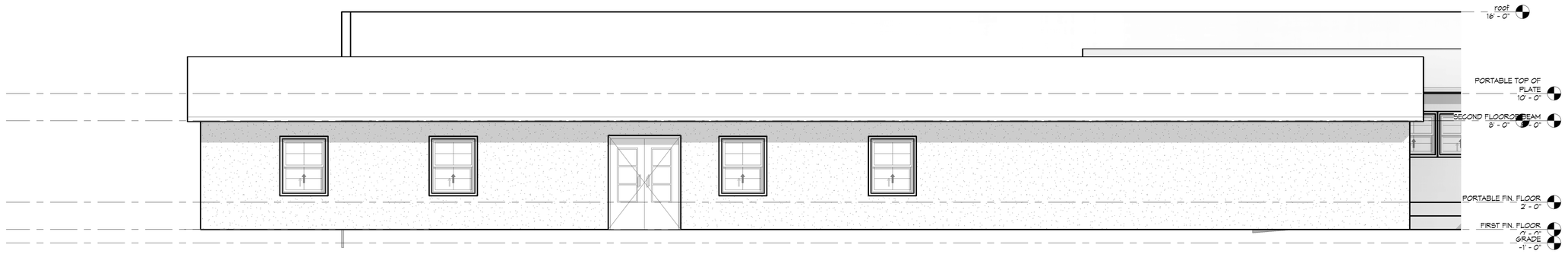


**4** **EXISTING WEST ELEVATION - BUILDING 'A'**
1/4" = 1'-0"


XAVIER SALAS
NCARB AIA | LEED AP
AR 98387
561.699.7472
xsalas.com

20 Forest Hills Ln
Boca Raton, FL 33431


**PROJECT**
FIVE STAR EDUCATION

**PROJECT ADDRESS**
2390 S. MILITARY TRAIL
PALM SPRINGS, FL 33415

**CLIENT**
FIVE STAR EDUCATION

**CONSULTANTS**

**REGISTRATION**
XAVIER SALAS
NCARB AIA | LEED AP
AR 98387

STATE OF FLORIDA · XAVIER SALAS · AR98387 · REGISTERED ARCHITECT

XAVIER SALAS
AR # 98387

**ISSUED FOR:**
SITE PLAN APPLICATION

| REVISIONS/ISSUES | | |
|---|---|---|
| No. | DESCRIPTION | DATE |

| | |
|---|---|
| **PROJECT NUMBER** | 19008 |
| **PROJECT MANAGER** | XS |
| **DRAWN BY** | YJ |
| **CHECKED BY** | XS |

**SHEET TITLE**
**ELEVATIONS BUILDING 'A'**

**SHEET NUMBER**
**A2**

**SHEET OF**


IT IS A VIOLATION OF THE LAW FOR ANY PERSON, UNLESS ACTING UNDER THE DIRECTION OF A LICENSED ARCHITECT, TO ALTER THESE PLANS AND SPECIFICATIONS. THIS DOCUMENT CONTAINS PROPERTY INFORMATION AND SHALL NOT BE USED IN WHOLE OR IN PART, WITHOUT THE PRIOR WRITTEN CONSENT OF XAVIER SALAS NCARB AIA - LEED AP COPYRIGHT 2019

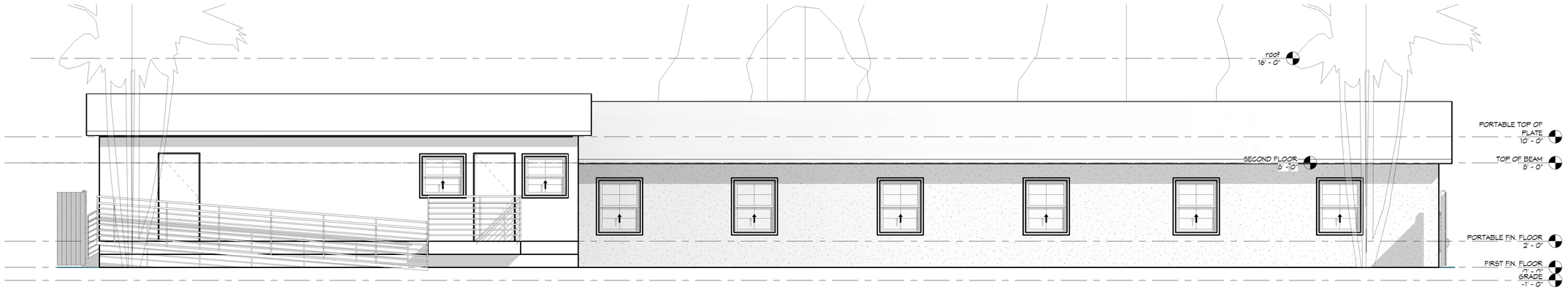


**1 EXISTING EAST ELEVATION - BUILDING 'B'**
1/4" = 1'-0"

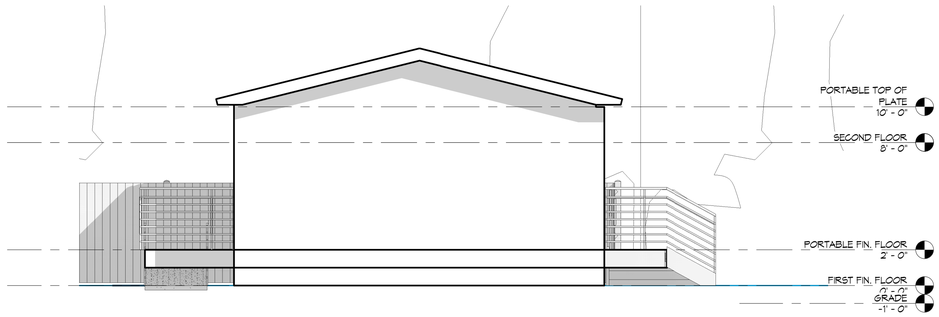


**2 EXISTING NORTH ELEVATION - BUILDING 'B'**
1/4" = 1'-0"

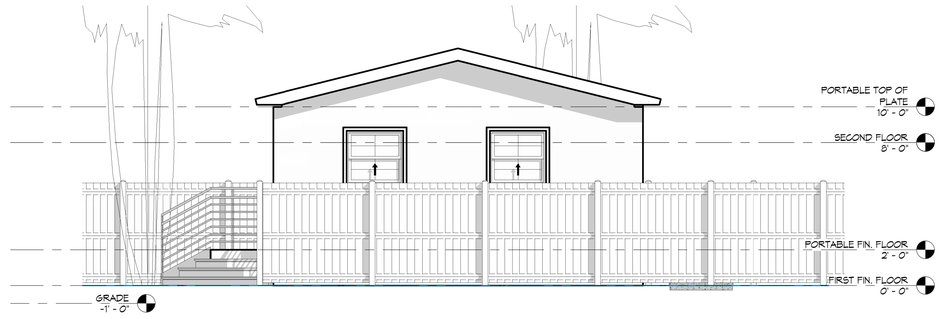


**3 EXISTING SOUTH ELEVATION - BUILDING 'B'**
1/4" = 1'-0"

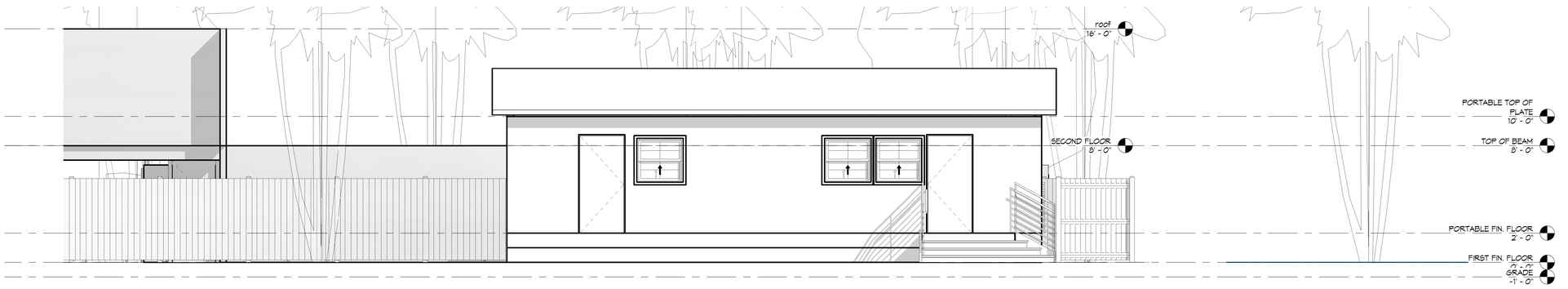


**4 EXISTING WEST ELEVATION - BUILDING 'B'**
1/4" = 1'-0"

XAVIER SALAS
NCARB AIA | LEED AP
AR 98387
561.699.7472
xsalas.com

20 Forest Hills Ln
Boca Raton, FL 33431

**PROJECT**
FIVE STAR EDUCATION

**PROJECT ADDRESS**
2390 S. MILITARY TRAIL
PALM SPRINGS, FL 33415

**CLIENT**
FIVE STAR EDUCATION

**CONSULTANTS**

**REGISTRATION**
XAVIER SALAS
NCARB AIA | LEED AP
AR 98387

STATE OF FLORIDA · XAVIER SALAS · AR98387 · REGISTERED ARCHITECT

XAVIER SALAS
AR # 98387

**ISSUED FOR:**
SITE PLAN APPLICATION

| REVISIONS/ISSUES | | |
|---|---|---|
| No. | DESCRIPTION | DATE |

| | |
|---|---|
| **PROJECT NUMBER** | 19008 |
| **PROJECT MANAGER** | XS |
| **DRAWN BY** | YJ |
| **CHECKED BY** | XS |

**SHEET TITLE**
**ELEVATIONS BUILDING 'B'**

**SHEET NUMBER**
**A3**

**SHEET OF**

"IT IS A VIOLATION OF THE LAW FOR ANY PERSON, UNLESS ACTING UNDER THE DIRECTION OF A LICENSED ARCHITECT, TO ALTER THESE PLANS AND SPECIFICATIONS." THIS DOCUMENT CONTAINS PROPRIETARY INFORMATION AND SHALL NOT BE USED OR REPRODUCED, IN WHOLE OR IN PART, WITHOUT THE PRIOR WRITTEN CONSENT OF XAVIER SALAS NCARB AIA - LEED AP COPYRIGHT 2019

# Palm Beach County Fire Rescue

405 Pike Road, West Palm Beach, FL 33411
Telephone (561) 616-7030 Fax (561) 616-7082
discover.pbcgov.org/pbcfr/boss

| | | | |
|---|---|---|---|
| **Occupant Name:** | LOVE TABERNACLE #A | **Inspection Date:** | 1/22/2021 |
| **Address:** | 2390 South MILITARY Trail | **InspectionType:** | Other/Misc. |
| **Suite:** | A | **Property Use Type:** | Church, mosque, synagogue, temple, chapel |
| **City:** | PALM SPRINGS | **Local File ID:** | |
| **State:** | FL | **Zone:** | 70 |
| **Zip Code:** | 33415 | **Inspected By:** | Anthony Vazquez<br>561-712-6390<br>AVazqueziii@pbcgov.org |
| **District:** | 470 | | |

Thank you for keeping your business and our community safe!

You have passed your inspection. If you have any questions, please call our office. **No Violations.**

**Inspector Comments:** Conducted a courtesy inspection with Palm Springs Building / Zoning Department. The occupant is considering making the occupancy an educational pre-school/learning. This was originally used for Sunday/ Religious school type classes associated with the church and not zoned as a pre-school. They will need to provide a full Life Safety plan showing they are current with all appropriate codes Fire, Building and Zoning.

Ref: 99378

# Palm Beach County Fire Rescue

405 Pike Road, West Palm Beach, FL 33411
Telephone (561) 616-7030 Fax (561) 616-7082
discover.pbcgov.org/pbcfr/boss

| | | | |
|---|---|---|---|
| **Occupant Name:** | LOVE TABERNACLE #B | **Inspection Date:** | 1/22/2021 |
| **Address:** | 2390 South MILITARY Trail | **InspectionType:** | Other/Misc. |
| **Suite:** | B | **Property Use Type:** | Church, mosque, synagogue, temple, chapel |
| **City:** | PALM SPRINGS | **Local File ID:** | 8927 |
| **State:** | FL | **Zone:** | 70 |
| **Zip Code:** | 33415 | **Inspected By:** | Anthony Vazquez<br>561-712-6390<br>AVazqueziii@pbcgov.org |
| **District:** | 470 | | |

Thank you for keeping your business and our community safe!

You have passed your inspection. If you have any questions, please call our office. **No Violations.**

**Inspector Comments:** Conducted a courtesy inspection with Palm Springs Building / Zoning Department. The occupant is considering making the occupancy an educational pre-school/learning. This was originally used for Sunday/ Religious school type classes associated with the church and not zoned as a pre-school. They will need to provide a full Life Safety plan showing they are current with all appropriate codes Fire, Building and Zoning.

Ref: 99382

# Palm Beach County Fire Rescue

405 Pike Road, West Palm Beach, FL 33411
Telephone (561) 616-7030 Fax (561) 616-7082
discover.pbcgov.org/pbcfr/boss

| | | | |
|---|---|---|---|
| **Occupant Name:** | LOVE TABERNACLE #C | **Inspection Date:** | 1/22/2021 |
| **Address:** | 2390 South MILITARY Trail | **InspectionType:** | Other/Misc. |
| **Suite:** | C | **Property Use Type:** | Church, mosque, synagogue, temple, chapel |
| **City:** | PALM SPRINGS | **Local File ID:** | |
| **State:** | FL | **Zone:** | 70 |
| **Zip Code:** | 33415 | **Inspected By:** | Anthony Vazquez<br>561-712-6390<br>AVazqueziii@pbcgov.org |
| **District:** | 470 | | |

Thank you for keeping your business and our community safe!

You have passed your inspection. If you have any questions, please call our office. **No Violations.**

**Inspector Comments:** Conducted a courtesy inspection with Palm Springs Building / Zoning Department. The occupant is considering making the occupancy an educational pre-school/learning. This was originally used for Sunday/ Religious school type classes associated with the church and not zoned as a pre-school. They will need to provide a full Life Safety plan showing they are current with all appropriate codes Fire, Building and Zoning.

Ref: 99383

2-18/2021

Good afternoon Iramis,

The question was posed, “what needs to be done or can be done” for the operator to utilize the space for the intended usages. This is a loaded question so I’ll attempt to provide as much helpful information as I can to guide the customer. The first and most crucial step is for the architect to identify what the existing occupancy uses were for the three buildings in accordance with the Florida Fire Prevention Code (FFPC). Chapter 43 – Building Rehabilitation of the FFPC will then allow us to properly identify the required fire and life safety features needed to adequately protect occupants for the proposed uses.

For example, as a New Educational occupancy (Building C – grades K through 5) the building is required to be protected by a supervised automatic fire sprinkler system and manual fire alarm system; however, as an Existing Educational occupancy, no fire sprinkler system is required, but a manual fire alarm system is required as well as “rescue windows” for the classrooms exceeding 250 sq.ft. There are other requirements, but the example provided is the most critical.

For the proposed day care uses, again we would need to have the existing uses classified; however, as an Existing Day Care occupancy a manual fire alarm system and a corridor smoke detection system is required. Additionally, in Building “A” rescue windows are needed for classrooms exceeding 250 sq.ft. and the corridor requires a minimum of ½-hour fire resistance rating. There are other requirements but again these are just examples…

Wesley Jolin, IAAI-CFI®
Fire Safety Specialist
Palm Beach County Fire Rescue
wjolin@pbcgov.org<mailto:wjolin@pbcgov.org>
561.233.2695
2300 North Jog Road: Suite 1E-40
West Palm Beach FL 33411

**Department of Engineering and Public Works**

P.O. Box 21229

West Palm Beach, FL 33416-1229

(561) 684-4000

www.pbcgov.com

**Palm Beach County Board of County Commissioners**

Karen T. Marcus, Chair

Tony Masilotti, Vice Chairman

Jeff Koons

Warren H. Newell

Mary McCarty

Burt Aaronson

Addie L. Greene

**County Administrator**

Robert Weisman

July 9, 2003

Ms. Bette Lowe
Director of Land Development
Village of Palm Springs
226 Cypress Lane
Palm Springs, FL 33461

**RE: Terranova Academy**
**TRAFFIC PERFORMANCE STANDARDS REVIEW**

Dear Ms. Lowe:

The Palm Beach County Traffic Division has reviewed the traffic statement for the project entitled; **Terranova Academy**, pursuant to the Traffic Performance Standards in Article 15 of the Palm Beach County Land Development Code. The project is summarized as follows:

| | |
|---|---|
| **Location:** | NE Corner of Military Trail/Cypress Lane |
| **Municipality:** | Village of Palm Springs |
| **Existing Uses:** | 16,512 SF Church, and 7,058 SF Daycare/School |
| **Proposed Uses:** | No increase in Building or number of Students |
| **New Daily Trips:** | None |
| **Build-out Year:** | 2003 |

Based on our review, the Traffic Division has determined that the proposed operational changes meet the Traffic Performance Standards of Palm Beach County, under the following condition:

- There shall be no building expansion or addition to the existing number of school students.

If you have any questions regarding this determination, please contact me at 684-4030.

Sincerely,

OFFICE OF THE COUNTY ENGINEER

Masoud Atefi, MSCE
Sr. Engineer - Traffic Division

CC: Thomas J. Twomey, PE.

File: General - TPS - Mun - Traffic Study Review

F:\TRAFFIC\ma\Admin\Approvals\030704.doc

*"An Equal Opportunity Affirmative Action Employer"*

*printed on recycled paper*

March 26, 2021 *Sent via e-mail: info@5starecf.com*

Martie Lovely
16112 E Preakness Drive
Loxahatchee, Fl 33417
C 561.301.7511

**Re: Five Star Education – Traffic Concurrency Analysis**
**PCN 70-42-44-13-02-003-0151**
**Palm Springs Application No.: 20080137**

Dear Martie,

JFO Group Inc. has been retained to evaluate a traffic impact analysis to determine compliance with *Palm Beach County (PBC) - Traffic Performance Standards (TPS) - Article 12 of the PBC Unified Land Development Code (ULDC)*. This traffic statement is associated with a site plan amendment application for the Five Star Education property to allow again daycare/school uses on the subject site.

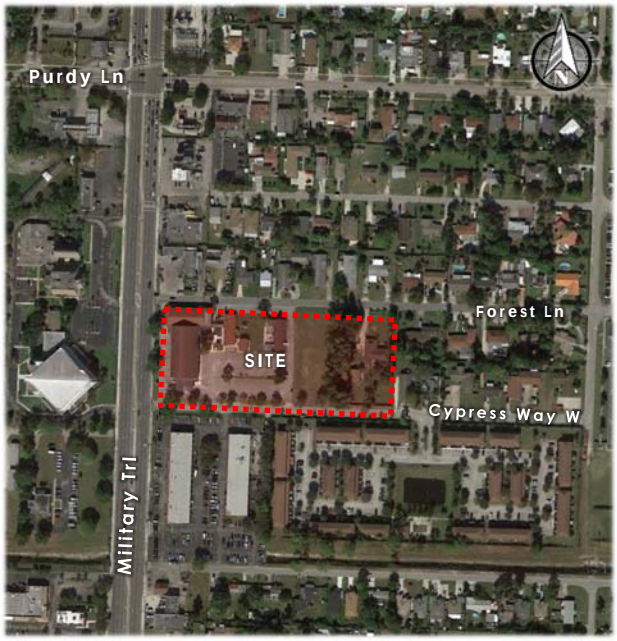


**Figure 1 : Project Location**

The site is located on the east side of Military Trail, about 0.15 miles south of Purdy Lane in the Village of Palm Springs, Florida. Figure 1 shows the project location in relation to the transportation network. Parcel Control Number associated with this project is 70-42-44-13-02-003-0151**.** A copy of the property appraiser information for the site is included as Exhibit 1 while Exhibit 2 includes a copy of the proposed site plan for the project. Project buildout is expected in the year 2022.

There is an existing 11,000 SF Church attached to a 5,435 SF accessory use building where a 62-student daycare and an 89-student Elementary School are being proposed on the existing buildings on the east side of the property. This site was last approved as a 16,512 SF Church and a 7,058 SF Day Care/School. Exhibit 3 includes a copy of the latest TPS approval for the site. The Day Care/School operated last in 2006-2007 as the Terranova Charter School which held 141 students from K-5, see Exhibit 4.

Project trip generation rates used for this analysis were based on *PBC Trip Generation Rates* dated March 2, 2020. Table 1 shows the rates used in order to determine the trip generation for Daily, AM, and PM peak hour conditions while Table 2 summarizes the net Daily, AM, and PM peak trips potentially generated by the existing and proposed development. For simplification purposes, no internal capture was assumed among the existing/proposed uses. Exhibit 5 includes a copy of the PBC trip generation rates.

Table 2 summarizes the net Daily, AM, and PM peak trips potentially generated by the proposed development. According to Table 2, the net Daily, AM and PM peak trips potentially generated due to the proposed development are 295, 84 and 39 trips respectively. Therefore, according to Table 12.B.2.D-7 3A from the PBC – TPS and given the trip generation characteristics from Table 2, a 1-mile Radius of Development Influence (RDI) needs to be considered for traffic impact analysis.


**6671 W Indiantown Rd • Suite 50-324 • Jupiter, Florida 33458**
**T: (561) 462-5364 • F: (561) 465-8044 • info@jfo.us**

**Table 1: Trip Generation Rates**

| Land Use | ITE Code | Daily Trip Gen. | AM Peak Hour | | | PM Peak Hour | | | Weekend Peak Hour | | |
|---|---|---|---|---|---|---|---|---|---|---|---|
| | | | In | Out | Total | In | Out | Total | In | Out | Total |
| Church | 560 | 6.95 | 60% | 40% | 0.33 | 45% | 55% | 0.49 | 48% | 52% | 9.99 |
| Daycare | 565 | 4.09 | 53% | 47% | 0.78 | 47% | 53% | 0.79 | - | - | - |
| Elementary School | 520 | 1.89 | 54% | 46% | 0.67 | 48% | 52% | 0.17 | - | - | - |

**Table 2: Trip Generation**

| Land Use | Intensity | Daily Traffic | AM Peak Hour | | | PM Peak Hour | | | Weekend Peak Hour | | |
|---|---|---|---|---|---|---|---|---|---|---|---|
| | | | In | Out | Total | In | Out | Total | In | Out | Total |
| **EXISTING DEVELOPMENT** | | | | | | | | | | | |
| Church | 16,435 SF | 114 | 3 | 2 | 5 | 4 | 4 | 8 | 79 | 85 | 164 |
| **Pass-By** | 5% | 6 | 0 | 0 | 0 | 0 | 0 | 0 | 4 | 4 | 8 |
| **Net Existing Traffic** | | **108** | **3** | **2** | **5** | **4** | **4** | **8** | **75** | **81** | **156** |
| **PROPOSED DEVELOPMENT** | | | | | | | | | | | |
| Church | 16,435 SF | 114 | 3 | 2 | 5 | 4 | 4 | 8 | 79 | 85 | 164 |
| Daycare | 62 Students | 254 | 25 | 23 | 48 | 23 | 26 | 49 | 0 | 0 | 0 |
| K-5 School | 89 Students | 168 | 32 | 28 | 60 | 7 | 8 | 15 | 0 | 0 | 0 |
| | Σ | *536* | *60* | *53* | *113* | *34* | *38* | *72* | *79* | *85* | *164* |
| **Pass-By** | | | | | | | | | | | |
| Church | 5% | 6 | 0 | 0 | 0 | 0 | 0 | 0 | 4 | 4 | 8 |
| Day Care | 50% | 127 | 13 | 11 | 24 | 12 | 13 | 25 | 0 | 0 | 0 |
| | Σ | *133* | *13* | *11* | *24* | *12* | *13* | *25* | *4* | *4* | *8* |
| **Net Proposed Traffic** | | **403** | **47** | **42** | **89** | **22** | **25** | **47** | **75** | **81** | **156** |
| | | | | | | | | | | | |
| **Net Traffic** | | **295** | **44** | **40** | **84** | **18** | **21** | **39** | **0** | **0** | **0** |

Figure 2 shows the project traffic assignment as well as the signalized intersections and roadway geometry within the RDI used to determine the functional classification of the impacted roadways. Table 3 includes the project impact within Test 1 RDI.


6671 W Indiantown Rd • Suite 50-324 • Jupiter, Florida 33458
T: (561) GO2-JFOG • www.jfogroupinc.com • info@jfo.us

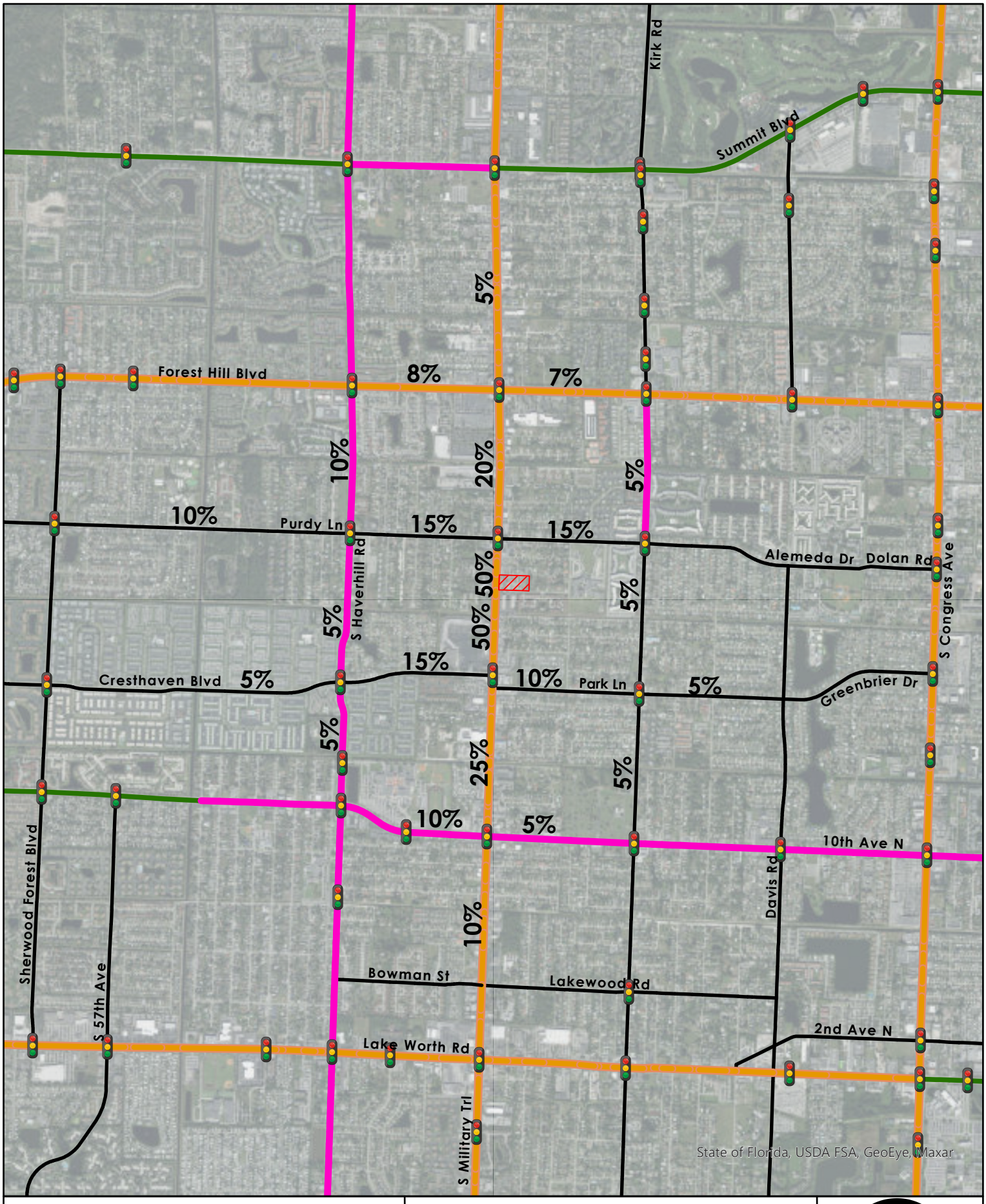


**Figure 2:**
**Traffic Assignment**
**Five Star Education**

**Table 3: Project Impact**

| Roadway | From | To | Ln | Number of Existing and Proposed Traffic Signals - 1 | Length (miles) | Signalized intersections per mile | Class | LOS Capacity | Traffic Assignment | Project Traffic | Traffic Impact |
|---|---|---|---|---|---|---|---|---|---|---|---|
| Purdy Ln | Jog Rd | Haverhill Rd | 2 | 3 | 1.54 | 1.95 | I | 880 | 10% | 4 | 0.45% |
| Purdy Ln | Haverhill Rd | Military Tr | 2 | 1 | 0.51 | 1.96 | I | 880 | 15% | 7 | 0.80% |
| Purdy Ln | Military Tr | Kirk Rd | 2 | 1 | 0.50 | 2.00 | II | 810 | 15% | 7 | 0.86% |
| | | | | | | | | | | | |
| Cresthaven Blvd | Sherwood Forest Blvd | Haverhill Rd | 2 | 1 | 1.01 | 0.99 | I | 880 | 5% | 2 | 0.23% |
| Cresthaven Blvd | Haverhill Rd | Military Tr | 2 | 1 | 0.53 | 1.89 | I | 880 | 15% | 7 | 0.80% |
| | | | | | | | | | | | |
| 10th Ave N | Haverhill Rd | Military Tr | 5 | 2 | 0.52 | 3.85 | II | 1,770 | 10% | 4 | 0.23% |
| 10th Ave N | Military Tr | Kirk Rd | 5 | 1 | 0.50 | 2.00 | II | 1,770 | 5% | 2 | 0.11% |
| | | | | | | | | | | | |
| Haverhill Rd | 10th Ave N | Cresthaven Blvd | 5 | 2 | 0.42 | 4.76 | II | 1,770 | 5% | 2 | 0.11% |
| Haverhill Rd | Cresthaven Blvd | Purdy Ln | 5 | 1 | 0.51 | 1.96 | I | 1,960 | 5% | 2 | 0.10% |
| Haverhill Rd | Purdy Ln | Forest Hill Blvd | 5 | 1 | 0.50 | 2.00 | II | 1,770 | 10% | 4 | 0.23% |
| | | | | | | | | | | | |
| Military Trl | Lake Worth Rd | 10th Ave N | 6D | 1 | 0.76 | 1.32 | I | 2,940 | 10% | 4 | 0.14% |
| Military Trl | 10th Ave N | Cresthaven Blvd | 6D | 1 | 0.55 | 1.82 | I | 2,940 | 25% | 11 | 0.37% |
| Military Trl | Cresthaven Blvd | Site | 6D | 2 | 0.98 | 2.04 | II | 2,680 | 50% | 22 | 0.82% |
| Military Trl | Site | Purdy Ln | | | | | | | 50% | 22 | 0.82% |
| Military Trl | Purdy Ln | Forest Hill Blvd | 6D | 2 | 0.98 | 2.04 | II | 2,680 | 20% | 9 | 0.34% |

Based on the *PBC – TPS* and the *Land Development Design Standards Manual*, a left-turn lane is required at each driveway where inbound peak hour left-turning traffic is equal or greater than 30 vehicles. A right-turn lane is required at each driveway where street Average Daily Traffic (ADT) volumes exceed 10,000 vehicles per day, and driveway daily volume is greater than 1,000 trips, with inbound peak hour right-turning traffic being at least 75 vehicles. Figure 3 provides Daily, AM and PM peak hour driveway volumes for the Five Star Education property. As part of a conservative analysis, it was assumed that all project traffic is arriving/departing via Military Trail where both Forest Ln and Cypress Way W provide connectivity to the neighborhood to the east of the subject site as well as direct access to Purdy Ln. Table 4 includes HCS analyses where the project connects to Military Trail. As shown in Table 4, the existing roadway system can accommodate the proposed project traffic, see Exhibit 6.


6671 W Indiantown Rd • Suite 50-324 • Jupiter, Florida 33458
T: (561) GO2-JFOG • www.jfogroupinc.com • info@jfo.us

**Table 4: HCS Summary**

| MOEs | Eastbound | | | | Westbound | | | | Northbound | | | | Southbound | | | |
|---|---|---|---|---|---|---|---|---|---|---|---|---|---|---|---|---|
| | U | L | T | R | U | L | T | R | U | L | T | R | U | L | T | R |
| **AM** | | | | | | | | | | | | | | | | |
| **Military Trl & Forest Ln** | | | | | | | | | | | | | | | | |
| Volume (veh/h) | - | - | - | 0 | - | - | - | 48 | 43 | 1 | 1575 | 30 | 1 | 16 | 1184 | 0 |
| 95% Queue Length | - | - | - | 0.0 | - | - | - | 0.7 | - | 0.3 | - | - | - | 0.3 | - | - |
| Control Delay | - | - | - | 14.8 | - | - | - | 21.9 | - | 13.2 | - | - | - | 26.8 | - | - |
| Level of Service | - | - | - | B | - | - | - | C | - | B | - | - | - | D | - | - |
| **Military Trl & Cypress Way W** | | | | | | | | | | | | | | | | |
| Volume | - | - | - | - | - | - | - | 43 | - | - | 1606 | 64 | - | - | 1221 | - |
| 95% Queue Length | - | - | - | - | - | - | - | 0.6 | - | - | - | - | - | - | - | - |
| Control Delay | - | - | - | - | - | - | - | 22.6 | - | - | - | - | - | - | - | - |
| Level of Service | - | - | - | - | - | - | - | C | - | - | - | - | - | - | - | - |
| **Military Trl & U-Turn** | | | | | | | | | | | | | | | | |
| Volume | - | - | - | - | - | - | - | 8 | 30 | - | 1620 | 2 | 32 | 15 | 1195 | - |
| 95% Queue Length | - | - | - | - | - | - | - | 0.1 | 0.2 | - | - | - | - | 0.7 | - | - |
| Control Delay | - | - | - | - | - | - | - | 19.3 | 12.9 | - | - | - | - | 23.0 | - | - |
| Level of Service | - | - | - | - | - | - | - | C | B | - | - | - | - | C | - | - |
| **PM** | | | | | | | | | | | | | | | | |
| **Military Trl & Forest Ln** | | | | | | | | | | | | | | | | |
| Volume (veh/h) | - | - | - | 0 | - | - | - | 24 | 28 | 2 | 1635 | 12 | 17 | 11 | 1721 | 0 |
| 95% Queue Length | - | - | - | 0.0 | - | - | - | 0.3 | - | 0.4 | - | - | - | 0.4 | - | - |
| Control Delay | - | - | - | 20.0 | - | - | - | 20.7 | - | 19.8 | - | - | - | 23.5 | - | - |
| Level of Service | - | - | - | C | - | - | - | C | - | C | - | - | - | C | - | - |
| **Military Trl & Cypress Way W** | | | | | | | | | | | | | | | | |
| Volume | - | - | - | - | - | - | - | 43 | - | - | 1632 | 52 | - | - | 1743 | - |
| 95% Queue Length | - | - | - | - | - | - | - | 0.7 | - | - | - | - | - | - | - | - |
| Control Delay | - | - | - | - | - | - | - | 22.8 | - | - | - | - | - | - | - | - |
| Level of Service | - | - | - | - | - | - | - | C | - | - | - | - | - | - | - | - |
| **Military Trl & U-Turn** | | | | | | | | | | | | | | | | |
| Volume | - | - | - | - | - | - | - | 10 | 26 | - | 1652 | 2 | 22 | 11 | 1719 | - |
| 95% Queue Length | - | - | - | - | - | - | - | 0.1 | 0.3 | - | - | - | - | 0.5 | - | - |
| Control Delay | - | - | - | - | - | - | - | 19.9 | 18.7 | - | - | - | - | 22.8 | - | - |
| Level of Service | - | - | - | - | - | - | - | C | C | - | - | - | - | C | - | - |


6671 W Indiantown Rd • Suite 50-324 • Jupiter, Florida 33458
T: (561) GO2-JFOG • www.jfogroupinc.com • info@jfo.us

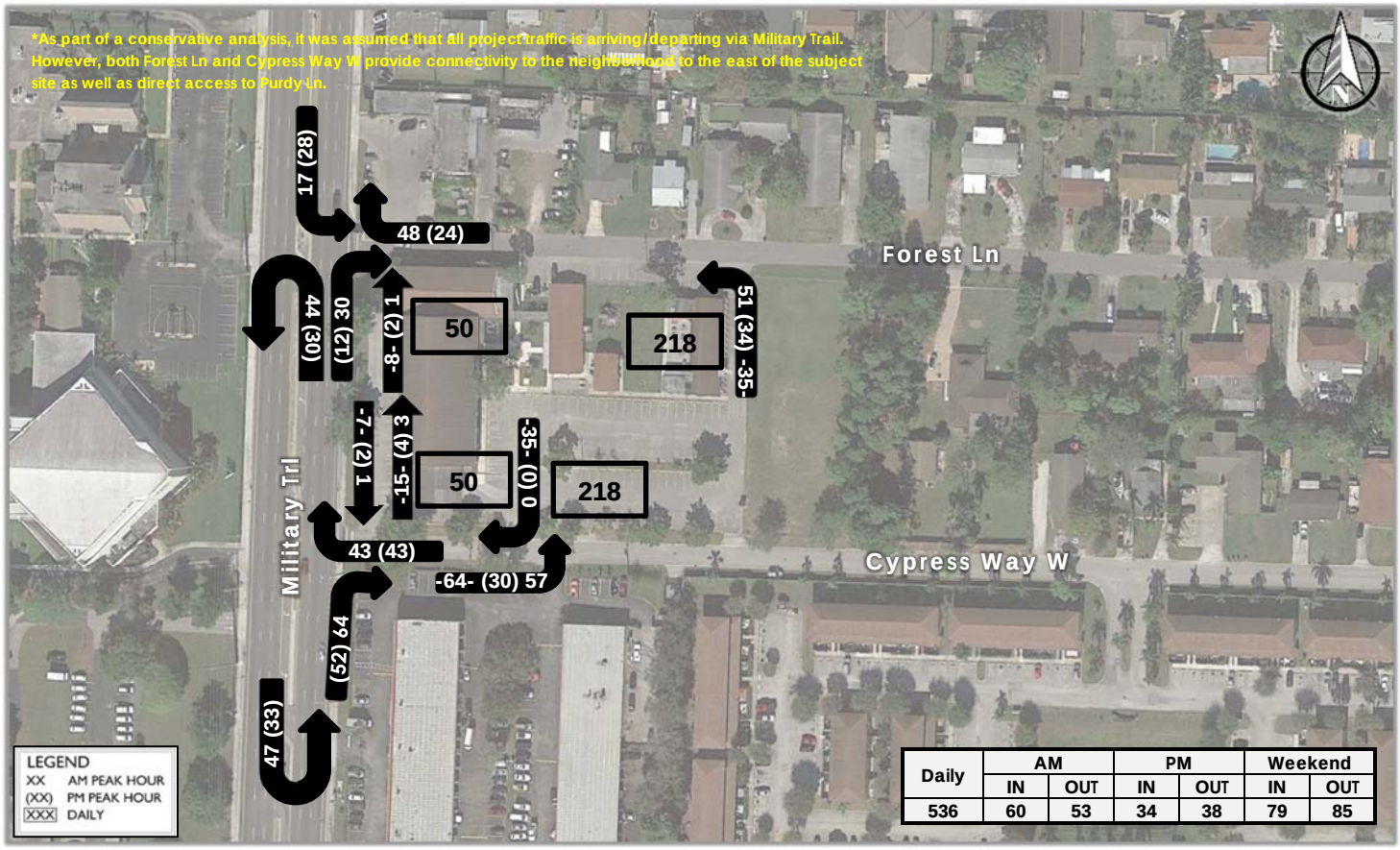


**Figure 2: Project Driveway Volumes**

The proposed changes to the Five Star Education property have been evaluated following *PBC TPS - Article 12 of the PBC ULDC*. This analysis shows that the proposed request to allow again daycare/school uses on the subject site will generate less than one percent (1%) of the adjacent roadway peak-hour peak-direction LOS in all links included within the PBC RDI. This analysis shows that the proposed development will be in compliance with *PBC TPS - Article 12 of the PBC ULDC*. Project build-out is expected in 2022.

Sincerely,

**JFO GROUP INC**
COA Number 32276

JUAN F. ORTEGA
LICENSE
No. 63422
STATE OF FLORIDA
PROFESSIONAL ENGINEER

Enclosures: Exhibit 1: Property Appraiser Information; Exhibit 2: Site Plan; Exhibit 3: PBC TPS Approval; Exhibit 4: Terranova Charter School; Exhibit 5: Trip Generation Rates; Exhibit 6: HCS Analyses


6671 W Indiantown Rd • Suite 50-324 • Jupiter, Florida 33458
T: (561) GO2-JFOG • www.jfogroupinc.com • info@jfo.us

This item has been electronically signed and sealed by Dr. Juan F. Ortega, PE on March 26, 2021 using a Digital Signature. Printed copies of this document are not considered signed and sealed and the signature must be verified on any electronic copies.

## Property Detail

| | |
|---|---|
| Location Address | 2390 S MILITARY TRL |
| Municipality | PALM SPRINGS |
| Parcel Control Number | 70-42-44-13-02-003-0151 |
| Subdivision | ANNA JOHNS ESTATES IN |
| Official Records Book | 11908 Page 561 |
| Sale Date | JUL-2000 |
| Legal Description | ANNA-JOHNS ESTATES W 18 FT OF LT 15, LTS 16 THRU 22, LTS 23 THRU 26 (LESS W 3 FT MILITARY TRAIL R/W) LTS 27 THRU 33 & W 18 FT OF LT 34 BLK 3 |

## Owner Information

| Owners | Mailing address |
|---|---|
| TABERNACULO INTERNACIONAL INC | 2390 S MILITARY TRL<br>WEST PALM BEACH FL 33415 7501 |

## Sales Information

| Sales Date | Price | OR Book/Page | Sale Type | Owner |
|---|---|---|---|---|
| JUL-2000 | $1,400,000 | 11908 / 00561 | WARRANTY DEED | TABERNACULO INTERNACIONAL INC |
| JAN-1973 | $800 | 02247 / 01349 | | |
| JAN-1973 | $800 | 2247 / 01349 | WARRANTY DEED | CALVARY BAPTIST CHURCH |

## Exemption Information

| Applicant/Owner | Year | Detail |
|---|---|---|
| | 2021 | |

## Property Information

| | |
|---|---|
| Number of Units | 0 |
| *Total Square Feet | 28023 |
| Acres | 3.3911 |
| Use Code | 7100 - RELIGIOUS |
| Zoning | CG - Commercial General ( 70-PALM SPRINGS ) |

## Appraisals

| Tax Year | 2020 | 2019 | 2018 |
|---|---|---|---|
| Improvement Value | $1,480,503 | $1,421,444 | $1,445,124 |
| Land Value | $1,329,462 | $1,294,010 | $1,255,603 |
| Total Market Value | $2,809,965 | $2,715,454 | $2,700,727 |

*All values are as of January 1st each year*

## Assessed and Taxable Values

| Tax Year | 2020 | 2019 | 2018 |
|---|---|---|---|
| Assessed Value | $2,809,965 | $2,715,454 | $2,700,727 |
| Exemption Amount | $2,809,965 | $2,715,454 | $2,700,727 |
| Taxable Value | $0 | $0 | $0 |

## Taxes

| Tax Year | 2020 | 2019 | 2018 |
|---|---|---|---|
| Ad Valorem | $0 | $0 | $0 |
| Non Ad Valorem | $3,897 | $4,013 | $3,893 |
| Total tax | $3,897 | $4,013 | $3,893 |

**Dorothy Jacks, CFA, AAS PALM BEACH COUNTY PROPERTY APPRAISER www.pbcgov.org/PAPA**





## Property Detail

| | | | |
|---|---|---|---|
| Parcel Control Number: | 70-42-44-13-02-003-0151 | Location Address: | 2390 S MILITARY TRL |
| Owners: | TABERNACULO INTERNACIONAL INC | | |
| Mailing Address: | 2390 S MILITARY TRL,WEST PALM BEACH FL 33415 7501 | | |
| Last Sale: | JUL-2000 | Book/Page#: | 11908 / 561 Price: $1,400,000 |
| Property Use Code: | 7100 - RELIGIOUS | Zoning: | CG - Commercial General ( 70-PALM SPRINGS ) |
| Legal Description: | ANNA-JOHNS ESTATES W 18 FT OF LT 15, LTS 16 THRU 22, LTS 23 THRU 26 (LESS W 3 FT MILITARY TRAIL R/W) LTS 27 THRU 33 & W 18 FT OF LT 34 BLK 3 | Total SF: | 28023 Acres 3.3911 |

### 2020 Values (Current)

| | |
|---|---|
| Improvement Value | $1,480,503 |
| Land Value | $1,329,462 |
| Total Market Value | $2,809,965 |
| Assessed Value | $2,809,965 |
| Exemption Amount | $2,809,965 |
| Taxable Value | $0 |

**All values are as of January 1st each year.**

### 2020 Taxes

| | |
|---|---|
| Ad Valorem | $0 |
| Non Ad Valorem | $3,897 |
| Total Tax | $3,897 |

### 2021 Qualified Exemptions

### Applicants

### Building Footprint (Building 1 )

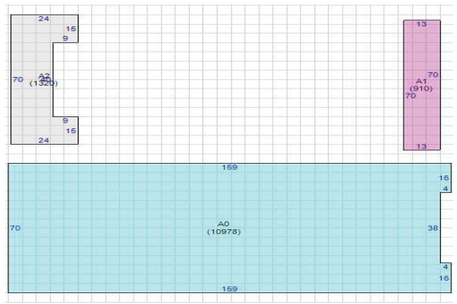


### Subarea and Square Footage (Building 1 )

| Description | Area Sq. Footage |
|---|---|
| RELIGIOUS | 910 |
| RELIGIOUS | 1320 |
| RELIGIOUS | 10978 |
| Total Square Footage : | 13208 |

### Extra Features

| Description | Year Built | Unit |
|---|---|---|
| Walkway-Concrete | 1972 | 4714 |
| Fence- Chain Link 6ft #11 Gaug | 1972 | 140 |
| Wall | 1972 | 222 |
| Patio | 1972 | 992 |
| Paving- Asphalt | 1972 | 53073 |

Unit may represent the perimeter, square footage, linear footage, total number or other measurement.

### Structural Details (Building 1 )

| Description | |
|---|---|
| 1. Year Built | 1972 |
| 2. RELIGIOUS | 13208 |

### MAP




**Dorothy Jacks, CFA, AAS PALM BEACH COUNTY PROPERTY APPRAISER www.pbcgov.org/PAPA** 3/16/2021

Owner: TABERNACULO INTERNACIONAL INC PCN: 70424413020030151 1 of 1



**Exhibit 1**

This Page Intentionally Left Blank



VIEW - 1 V1



VIEW - 2 V2



VIEW - 3 V3



VIEW - 4 V4



VIEW - 5 V5

## SITE DATA

| | |
|---|---|
| PROJECT No: | 19008 |
| NAME OF DEVELOPMENT / PROJECT: | FIVE STAR EDUCATION |
| OWNER: | LOVE TABERNACLE ASSEMBLY OF GOD OF PALM BEACH INC. |
| PROPOSED USE(S): | INSTITUTIONAL / PRESCHOOL |
| FUTURE LAND USE DESIGNATION: | LDN DENSITY |
| ZONING DISTRICT: | CG - COMMERCIAL GENERAL |
| SECTION/ TOWNSHIP / RANGE: | 2940 |
| PROPERTY CONTROL No: | 10-42-44-13-02-003-0151 |
| LOT ACREAGE / SF: | 3.19 ACRES - 138,966 SF |
| GROSS ACREAGE / SF: | 4.28 ACRES - 186,342.37 SF |
| FLOOR AREA RATIO (FAR): | 0.18 |
| BUILDING COVERAGE (%): | 17% |
| IMPERVIOUS SURFACE AREA(%) | 17% |
| BUILDING HEIGHT: | 35' MAX |
| OPEN SPACE / COMMON AREAS: | |
| NUMBER OF STORIES: | 1 |
| FINISHED GRADE ELEVATION: | 2' +- N.G.V.D. |
| CHANGE FROM CURRENT GRADE: | 0' +- N.G.V.D. |

PARKING:

| EMPLOYEES: | | |
|---|---|---|
| 16 - INFANTS ( > 12 MO.) | @ 4 CHILDREN / TEACHER | = 5 TEACHERS |
| 14 - 1-YEAR OLDS | @ 6 CHILDREN / TEACHER | = 3 TEACHERS |
| 11 - 2-YEAR OLDS | @ 11 CHILDREN / TEACHER | = 1 TEACHER |
| 12 - 3-YEAR OLDS | @ 15 CHILDREN / TEACHER | = 1 TEACHER |
| 8 - 4-YEAR OLDS | @ 20 CHILDREN / TEACHER | = 1 TEACHER |
| 84 - SCHOOLERS | @ 25 CHILDREN / TEACHER | = 4 TEACHERS |
| TOTAL TEACHERS: | | = 15 TEACHERS |
| SCHOOL DIRECTOR | | = 1 EMPLOYEE |
| RECEPTIONIST / SECRETARY | | = 1 EMPLOYEE |
| TOTAL NUMBER OF EMPLOYEES | | = 17 EMPLOYEES |

CHILDCARE FACILITIES, ONE PARKING SPACE PER EMPLOYEE AND TEACHER NORMALLY ENGAGED IN OR ABOUT THE BUILDING OR GROUNDS, OR ONE PARKING SPACE PER 200 SQUARE FEET OF GROSS FLOOR AREA ONE OFF-STREET LOADING/UNLOADING SPACE PER EIGHT PUPILS SHALL BE PROVIDED FOR A CONVENIENT DROP-OFF AREA, WITH CLEAR, UNOBSTRUCTED INGRESS AND EGRESS.

1 X EMPLOYEE @ 17 EMPLOYEES = 17 PARKING SPACES OR
1/200 OF GROSS FLOOR AREA @ 3,380 SF = 17 PARKING SPACES
17 PARKING SPACES SHALL BE PROVIDED
AND 1/8 PUPILS @ 62 = 8 PARKING SPACES
TOTAL PARKING SPACES FOR THE DAY CARE USE SHALL BE = 26 SPACES

ELEMENTARY AND JUNIOR HIGH SCHOOLS, ONE PARKING SPACE PER CLASSROOM, PLUS ONE PARKING SPACE PER EMPLOYEE AND TEACHER, PLUS ONE PARKING SPACE PER SIX SEATS IN THE AUDITORIUM OR OTHER PLACES OF ASSEMBLY.

1X CLASSROOM @ 4 CLASSROOMS = 4 SPACES +
1 X EMPLOYEE @ 4 TEACHERS = 4 SPACES
TOTAL PARKING FOR ELEMENTARY SCHOOL SHALL BE = 8 SPACES

CHURCH SPACES
1 SPACE / 4 OCCUPANTS = 545 DIVIDED BY 4 = 137 SPACES

TOTAL PARKING SPACES REQUIRED = 171 SPACES
TOTAL PARKING SPACES PROVIDED = 142 SPACES
(SEE BUSINESS OPERATING CONDITIONS/ RESTRICTIONS)

| | REQUIRED SETBACKS | PROPOSED SETBACKS |
|---|---|---|
| FRONT | 25.00' | 27.67' |
| SIDE | 15.00' | 68.43' |
| CORNER | 20.00' | 33.33' |
| REAR | 25.00' | 91.00' |

BUSINESS OPERATING CONDITIONS / RESTRICTIONS

1. PRESCHOOL FACILITY OPERATING HOURS WILL BE LIMITED TO 6:00 AM. - 6:00 PM MONDAY THRU FRIDAY (5 DAYS-WEEK / 12 HOURS / DAY) PLAYGROUND AREAS WILL OPERATE ONLY DURING DAYLIGHT (DUSK - DAWN.)
2. CHURCH OPERATING HOURS WILL BE LIMITED TO 6:00 PM TO 8:00 PM MONDAY THRU FRIDAY (5 DAYS / 2 HOURS / DAY) AND SATURDAYS AND SUNDAYS.
3. AT NO GIVEN TIME DAYCARE AND CHURCH OPERATE SIMULTANEOUSLY.

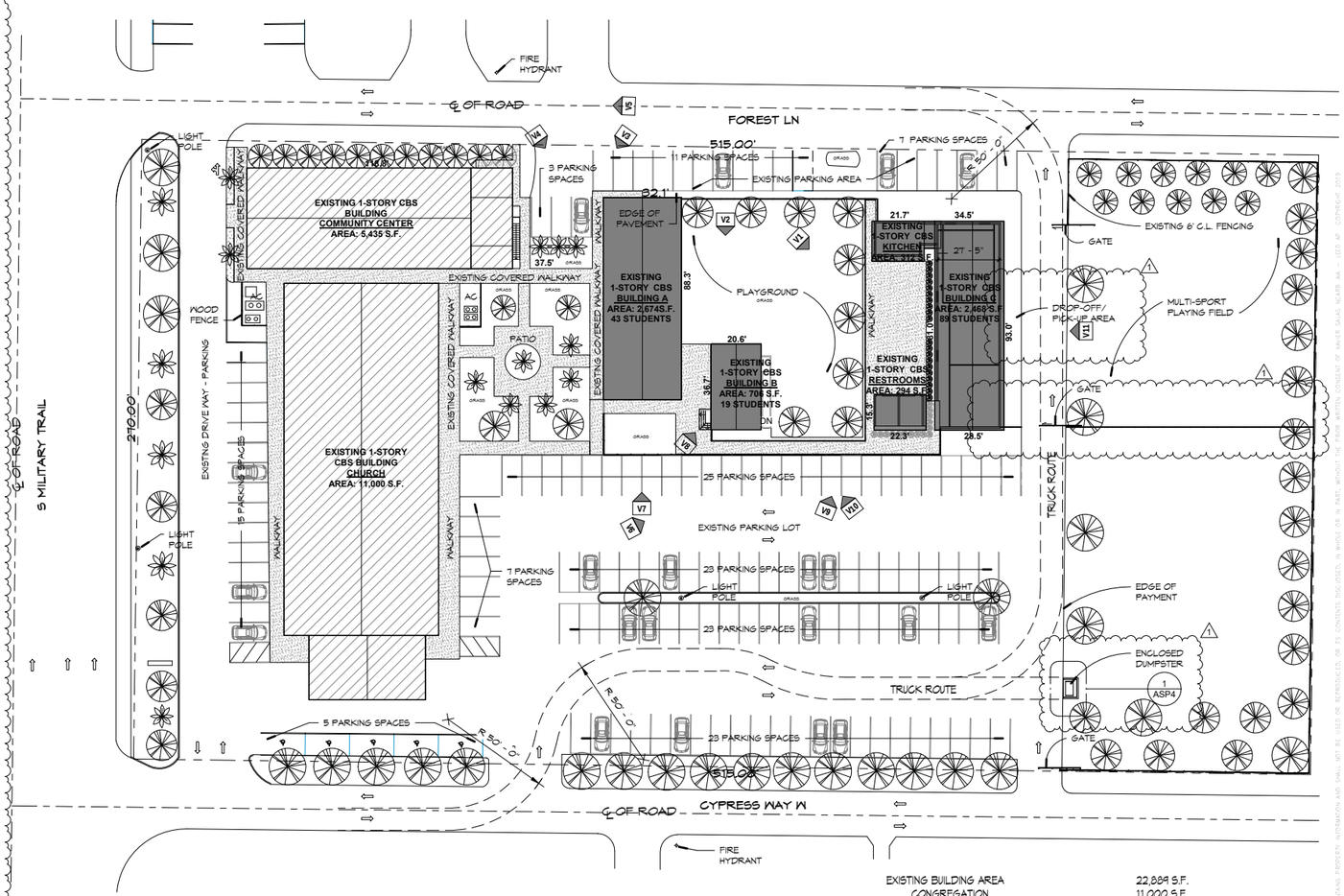


| | |
|---|---|
| EXISTING BUILDING AREA | 22,889 S.F. |
| CONGREGATION | 11,000 S.F. |
| FELLOWSHIP HALL | 5,435 S.F. |
| SCHOOL | 6,454 S.F. |
| EXISTING LOT COVERAGE | 17% |
| PROPOSED LOT COVERAGE | 17% |
| EXISTING IMPERVIOUS AREA | 91,640 S.F. 2.10 Ac |
| PROPOSED IMPERVIOUS AREA | 91,640 S.F. 2.10 Ac |
| EXISTING PARKING SPACES | 143 |
| PROPOSED PARKING SPACES | 143 |

1 EXISTING ARCHITECTURAL SITE PLAN
1" = 30'-0"



VIEW - 6 V6



VIEW - 7 V7



VIEW - 8 V8



VIEW - 9 V9



VIEW - 10 V10



VIEW - 11 V11


XAVIER SALAS
NCARB AIA | LEED AP
AR 98387
561.699.7472
xsalas.com

20 Forest Hills Ln
Boca Raton, FL 33431


PROJECT
FIVE STAR EDUCATION

PROJECT ADDRESS
2390 S. MILITARY TRAIL
PALM SPRINGS, FL 33415

CLIENT
FIVE STAR EDUCATION

CONSULTANTS

Digitally signed by Xavier M Salas
DN: cn=Xavier M Salas, o=Architect, ou=Architect, email=xsalas@ac0000308DA5, c=US
Reason: I am the author of this document
Date: 2020.12.22 20:07:58-05'00'

REGISTRATION
XAVIER SALAS
NCARB AIA | LEED AP
AR 98387

STATE OF FLORIDA · XAVIER SALAS · AR98387 · REGISTERED ARCHITECT
XAVIER SALAS
AR # 98387

ISSUED FOR:
SITE PLAN APPLICATION

| REVISIONS/ISSUES | | |
|---|---|---|
| No. | DESCRIPTION | DATE |
| 1 | BLDG. DEP. COMMENTS | 02/09/20 21 |

| | |
|---|---|
| PROJECT NUMBER | 19008 |
| PROJECT MANAGER | XS |
| DRAWN BY | YJ |
| CHECKED BY | XS |

SHEET TITLE
ARCHITECTURAL SITE PLAN

SHEET NUMBER
ASP1

SHEET OF


2019 XAVIER SALAS NCARB AIA LEED AP

"IT IS A VIOLATION OF THE LAW FOR ANY PERSON, UNLESS ACTING UNDER THE DIRECTION OF A LICENSED ARCHITECT, TO ALTER THESE PLANS AND SPECIFICATIONS." THIS DOCUMENT CONTAINS PROPRIETARY INFORMATION AND SHALL NOT BE USED OR REPRODUCED, OR ITS CONTENTS DISCLOSED, IN WHOLE OR IN PART, WITHOUT THE PRIOR WRITTEN CONSENT OF XAVIER SALAS, NCARB AIA, LEED AP. COPYRIGHT 2019.


SITE PLAN APPLICATION 12.02.2020

Exhibit 2

This Page Intentionally Left Blank

**Department of Engineering and Public Works**

P.O. Box 21229

West Palm Beach, FL 33416-1229

(561) 684-4000

FAX: (561) 684-4050

www.pbcgov.com

**Palm Beach County Board of County Commissioners**

Dave Kerner, Mayor

Robert S. Weinroth, Vice Mayor

Maria G. Marino

Gregg K. Weiss

Maria Sachs

Melissa McKinlay

Mack Bernard

**County Administrator**

Verdenia C. Baker

*"An Equal Opportunity Affirmative Action Employer"*

printed on sustainable and recycled paper

April 1, 2021

Dr. Juan F. Ortega, PE
JFO Group Inc.
6671 W Indiantown Road, Suite 50-324
Jupiter, FL 33458

**RE: Five Star Education**
**Project #: 210313**
**Traffic Performance Standards Review**

Dear Dr. Ortega:

The Palm Beach County Traffic Division has reviewed the **Five Star Education** Traffic Impact Statement, dated March 26, 2021, pursuant to the Traffic Performance Standards in Article 12 of the Palm Beach County Unified Land Development Code (ULDC). The project is summarized as follows:

| | |
|---|---|
| **Municipality:** | Palm Springs |
| **Location:** | NEC of Cypress Lane and Military Trail |
| **PCN:** | 70-42-44-13-02-003-0151 |
| **Access:** | Access driveway connections onto Cypress Lane and Forest Lane<br>(As used in the study and is NOT an approval by the County through this letter) |
| **Existing Uses:** | Church = 16,435 |
| **Proposed Uses:** | Additional:<br>Daycare = 62 Students<br>Elementary School = 89 Students |
| **New Daily Trips:** | 295 |
| **New Peak Hour Trips:** | 84 (44/40) AM; 39 (18/21) PM |
| **Build-out:** | December 31, 2022 |

Based on our review, the Traffic Division has determined the proposed development does not have significant peak hour traffic impact (as defined in PBC TPS) on the roadway network; therefore, the project **meets** the Traffic Performance Standards of Palm Beach County.

Please note the receipt of a Traffic Performance Standards (TPS) approval letter does not constitute the review and issuance of a Palm Beach County Right-of-Way (R/W) Construction Permit nor does it eliminate any requirements that may be deemed as site related. For work within Palm Beach County R/W, a detailed review of the project will be provided upon submittal for a R/W permit application. The project is required to comply with all Palm Beach County standards and may include R/W dedication.

No building permits are to be issued by the Village after the build-out date specified above. The County traffic concurrency approval is subject to the Project Aggregation Rules set forth in the Traffic Performance Standards Ordinance.

The approval letter shall be valid no longer than one year from date of issuance, unless an application for a Site Specific Development Order has been approved, an application for a Site Specific Development Order has been submitted, or the approval letter has been superseded by another approval letter for the same property.

If you have any questions regarding this determination, please contact me at 561-684-4030 or email QBari@pbcgov.org.

Sincerely,

Quazi Bari, P.E., PTOE
Manager – Growth Management
Traffic Division

QB:HA:rb
ec: Addressee
Iramis Cabrera, Interim PZ&B Director, Village of Palm Springs
Hanane Akif, E.I., Project Coordinator II, Traffic Division
Steve Bohovsky, Technical Assistant III, Traffic Division

File: General - TPS - Mun - Traffic Study Review
F:\TRAFFIC\HA\MUNICIPALITIES\APPROVALS\2021\210313 - FIVE STAR EDUCATION.DOCXN

**Department of Engineering and Public Works**

P.O. Box 21229

West Palm Beach, FL 33416-1229

(561) 684-4000

www.pbcgov.com

**Palm Beach County Board of County Commissioners**

Karen T. Marcus, Chair

Tony Masilotti, Vice Chairman

Jeff Koons

Warren H. Newell

Mary McCarty

Burt Aaronson

Addie L. Greene

**County Administrator**

Robert Weisman

July 9, 2003

Ms. Bette Lowe
Director of Land Development
Village of Palm Springs
226 Cypress Lane
Palm Springs, FL 33461

**RE: Terranova Academy**
**TRAFFIC PERFORMANCE STANDARDS REVIEW**

Dear Ms. Lowe:

The Palm Beach County Traffic Division has reviewed the traffic statement for the project entitled; **Terranova Academy**, pursuant to the Traffic Performance Standards in Article 15 of the Palm Beach County Land Development Code. The project is summarized as follows:

| | |
|---|---|
| **Location:** | NE Corner of Military Trail/Cypress Lane |
| **Municipality:** | Village of Palm Springs |
| **Existing Uses:** | 16,512 SF Church, and 7,058 SF Daycare/School |
| **Proposed Uses:** | No increase in Building or number of Students |
| **New Daily Trips:** | None |
| **Build-out Year:** | 2003 |

Based on our review, the Traffic Division has determined that the proposed operational changes meet the Traffic Performance Standards of Palm Beach County, under the following condition:

- There shall be no building expansion or addition to the existing number of school students.

If you have any questions regarding this determination, please contact me at 684-4030.

Sincerely,

OFFICE OF THE COUNTY ENGINEER

Masoud Atefi, MSCE
Sr. Engineer - Traffic Division

CC: Thomas J. Twomey, PE.

File: General - TPS - Mun - Traffic Study Review

F:\TRAFFIC\ma\Admin\Approvals\030704.doc

*"An Equal Opportunity Affirmative Action Employer"*

*printed on recycled paper*

This Page Intentionally Left Blank

**Florida Public Schools**

**Public Schools by City**
Public Schools by City A-I
Public Schools by City J-R
Public Schools by City S-Z

**Public Schools by County**
Public School by County A-K
Public School by County L-Z

**School Name & Type**
Elementary Schools A-I
Elementary Schools J-R
Elementary Schools S-Z
Middle Schools A-I
Middle Schools J-R
Middle Schools S-Z
High Schools A-I
High Schools J-R
High Schools S-Z

**Florida Links**
Florida Education
Florida Public Schools
Florida Private Schools
Florida School Districts
Florida Public Library
Florida College/University

FOLLOW ME ON twitter

AdChoices | Elementary Education | Compare Florida Schools | Nasza Florida

# Terranova Charter School - West Palm Beach, Florida - Elementary School



Palm Beach Martial Arts

**Martial arts classes make a**

great after school activity. Give your kids the benefits they need No Registration Fee $0

All U.S. Public Schools | Florida Public Schools

## Terranova Charter School

**Phone - 954-557-2162**
Add/Update Website

**Terranova Charter School**

**2390 S Military Trail**
**West Palm Beach, FL 33415**
West Palm Beach, Florida Public Schools (53)
West Palm Beach, Florida Private Schools (17)
West Palm Beach, Florida School Districts (1)
West Palm Beach, Florida Colleges (8)
West Palm Beach, Florida Public Libraries (3)

**Grades Taught/District Info**

**Lowest Grade Taught:** Kindergarten
**Highest Grade Taught:** 5th Grade
Florida Elementary Schools
**School District:** Palm Beach County School District
**County:** Palm Beach
Palm Beach County, Florida Public Schools (213)
Palm Beach County, Florida Private Schools (110)
Palm Beach County, Florida School Districts (1)
Palm Beach County, Florida Public Libraries (25)

**Statistics**

**Male/Female Population**

| Male | Female | Total |
|---|---|---|
| 63 | 78 | 141 |

**Students by Race**

| Race | Count | % |
|---|---|---|
| American Indian - Alaskan | 1 | 0.71 |
| Asian - Pacific Islander | 0 | - |
| Black | 4 | 2.84 |
| Hispanic | 123 | 87.23 |
| White | 13 | 9.22 |

**Student by Grade Count**

| Kindergarten | 1st | 2nd | 3rd | 4th | 5th | 6th | 7th | 8th | 9th | 10th | 11th | 12th |
|---|---|---|---|---|---|---|---|---|---|---|---|---|
| 58 | 30 | 22 | 31 | | | | | | | | | |

Submit your own review for this school

Exhibit 4

This Page Intentionally Left Blank

# *Palm Beach County Trip Generation Rates*

(Effective with traffic studies submited to the County on or after 4/15/2019)

| Gr | Landuse | ITE Code | Unit | Daily Rate/Equation | Pass-By % | AM Peak Hour In/Out | AM Peak Hour Rate/Equation | PM Peak Hour In/Out | PM Peak Hour Rate/Equation |
|---|---|---|---|---|---|---|---|---|---|
| Industrial | Light Industrial | 110 | 1000 S.F. | 4.96 | 10% | 88/12 | 0.7 | 13/87 | 0.63 |
| | Warehouse | 150 | 1000 S.F. | 1.74 | 10% | 77/23 | 0.17 | 27/73 | 0.19 |
| | Flex Space - IND FLU | PBC | 1000 S.F. | 7.86 | 10% | 64/36 | 1.53 | 40/60 | 1.21 |
| | Flex Space - COM FLU | PBC | 1000 S.F. | 29.67 | 45% | 72/28 | 2.12 | 40/60 | 2.67 |
| | Mini-Warehouse/SS | 151 | 1000 S.F. | 1.51 | 10% | 60/40 | 0.1 | 47/53 | 0.17 |
| Residential | Single Family Detached | 210 | Dwelling Unit | 10 | 0% | 25/75 | 0.74 | 63/37 | Ln(T) = 0.96 Ln(X) + 0.20 |
| | Multifamily Low-Rise Housing upto 2 story (Apartment/Condo/TH) | 220 | Dwelling Unit | 7.32 | 0% | 23/77 | 0.46 | 63/37 | 0.56 |
| | Multifamily Mid-Rise Housing 3-10 story (Apartment/Condo/TH) | 221 | Dwelling Unit | 5.44 | 0% | 26/74 | 0.36 | 61/39 | 0.44 |
| | 55+ SF Detached | 251 | Dwelling Unit | 4.27 | 0% | 33/67 | 0.24 | 61/39 | 0.30 |
| | 55+ SF Attached | 252 | Dwelling Unit | 3.7 | 0% | 35/65 | 0.2 | 55/45 | 0.26 |
| | Congregate Care Facility | 253 | Dwelling Unit | 2.02 | 0% | 60/40 | 0.07 | 53/47 | 0.18 |
| | Assisted Living Facility | 254 | Beds | 2.6 | 0% | 63/37 | 0.19 | 38/62 | 0.26 |
| Ldg | Hotel | 310 | Rooms | 8.36 | 10% | 59/41 | 0.47 | 51/49 | 0.6 |
| Rec | Movie Theater | 444 | Seats | 1.76 | 5% | N/A | 0 | 55/45 | 0.09 |
| | Health Club | 492 | 1000 S.F. | 32.93 | 5% | 50/50 | 1.41 | 57/43 | 3.53 |
| Institutional | Elementary School | 520 | Students | 1.89 | 0% | 54/46 | 0.67 | 48/52 | 0.17 |
| | Middle/Junior School | 522 | Students | 2.13 | 0% | 54/46 | 0.58 | 49/51 | 0.17 |
| | High School | 530 | Students | 2.03 | 0% | 67/33 | 0.52 | 48/52 | 0.14 |
| | Private School (K-8) | 534 | Students | Use Private K-12 rate | 0% | 55/45 | 0.91 | 46/54 | 0.26 |
| | Private School (K-12)* | 536 | Students | 2.48 | 0% | 61/39 | 0.80 | 43/57 | 0.17 |
| | Church/Synagogue[a] | 560 | 1000 S.F. | 6.95 | 5% | 60/40 | 0.33 | 45/55 | 0.49 |
| | Day Care | 565 | Students | 4.09 | 50% | 53/47 | 0.78 | 47/53 | 0.79 |
| | Library | 590 | 1000 S.F. | 72.05 | 10% | 71/29 | 1 | 48/52 | 8.16 |
| Med | Hospital | 610 | 1000 S.F. | 10.72 | 10% | 68/32 | 0.89 | 32/68 | 0.97 |
| | Nursing Home | 620 | Beds | 3.06 | 10% | 72/28 | 0.17 | 33/67 | 0.22 |
| Office | General Office (>5,000 SF GFA) | 710 | 1000 S.F. | Ln(T) = 0.97 Ln(X) + 2.50 | 10% | 86/14 | T = 0.94(X) + 26.49 | 16/84 | 1.15 |
| | Small Office Building (<=5,000 SF GFA) | 712 | 1000 S.F. | 16.19 | 10% | 83/18 | 1.92 | 32/68 | 2.45 |
| | Medical Office | 720 | 1000 S.F. | 34.8 | 10% | 78/22 | 2.78 | 28/72 | 3.46 |
| | Medical Office (Reduced)[b] | PBC | 1000 S.F. | 17.4 | 10% | 78/22 | 1.39 | 28/72 | 1.73 |
| | Government Office | 730 | 1000 S.F. | 22.59 | 10% | 75/25 | 3.34 | 25/75 | 1.71 |

Trip Generation Rates - Mostly from ITE 10th Edition

Updated March 2, 2020

# *Palm Beach County Trip Generation Rates*

(Effective with traffic studies submited to the County on or after 4/15/2019)

| Gr | Landuse | ITE Code | Unit | Daily Rate/Equation | Pass-By % | AM Peak Hour In/Out | AM Peak Hour Rate/Equation | PM Peak Hour In/Out | PM Peak Hour Rate/Equation |
|---|---|---|---|---|---|---|---|---|---|
| Retail | Nursery (Garden Center) | 817 | Acre | 108.1 | 0% | N/A[l] | 2.82 | N/A[l] | 8.06 |
| | Nursery (Wholesale) | 818 | Acre | 19.5[c] | 0% | N/A[l] | 0.26 | N/A[l] | 0.45 |
| | Landscape Services | PBC | Acre[m] | 121.70 | 0% | 40/60 | 34.4 | 58/42 | 15.1 |
| | Gen. Commercial | 820 | 1000 S.F. | Ln(T) = 0.68 Ln(X) + 5.57[d] | Note e | 62/38 | 0.94 | 48/52 | Ln(T) = 0.74 Ln(X) + 2.89[f] |
| | Automobile Sales (New) | 840 | 1000 S.F. | 27.84 | 15% | 73/27 | 1.87 | 40/60 | 2.43 |
| | Automobile Parts Sales | 843 | 1000 S.F. | 55.34 | 28% | 55/45 | 2.59 | 48/52 | 4.91 |
| | Tire Store | 848 | 1000 S.F. | 28.52 | 28% | 64/36 | 2.72 | 43/57 | 3.98 |
| | Pharmacy + DT | 881 | 1000 S.F. | 109.16 | 50% | 53/47 | 3.84 | 50/50 | 10.29 |
| Services | Drive-In Bank[g] | 912 | 1000 S.F. | 100.03 | 47% | 58/42 | 9.5 | 50/50 | 20.45 |
| | Quality Restaurant | 931 | 1000 S.F. | 83.84 | 44% | 50/50 | 0.73 | 67/33 | 7.8 |
| | High Turnover Sit-Down Rest. | 932 | 1000 S.F. | 112.18 | 43% | 55/45 | 9.94 | 62/38 | 9.77 |
| | Fast Food Restaurant w/o DT | 933 | 1000 S.F. | 346.23 | 45% | 60/40 | 25.1 | 50/50 | 28.34 |
| | Fast Food Restaurant + DT | 934 | 1000 S.F. | 470.95 | 49% | 51/49 | 40.19 | 52/48 | 32.67 |
| | Coffee/Donut Shop w/o DT | 936 | 1000 S.F. | 686.67[h] | 45% | 51/49 | 101.14 | 50/50 | 36.31 |
| | Coffee/Donut Shop + DT | 937 | 1000 S.F. | 820.38 | 49% | 51/49 | 88.99 | 50/50 | 43.38 |
| | Gas Station w/Convenience Store[i] | FDOT | FP, 1000 S.F. | 14.3*PM Trips | 61% | 50/50 | Note j | 50/50 | 12.3*FP+15.5*(X) |
| | Carwash (Automated)[k] | PBC | Lane | 166.00 | 0% | 50/50 | 11.97 | 50/50 | 13.65 |

**Footnotes**

a) Weekend peak hour rate = 9.99 per 1,000 s.f. with a 48/52 directional split

b) To be used only when adjacent to hospital, for Med. Office square footage not to exceed 44% of the hospital square footage

c) Use caution when using because of very low sample data. Consult with the County before using.

d) For intensities under 10,000 s.f., use a rate of 125.61 / 1,000 S.F. instead of the equation.

e) Pass-by percent = 62% for 10,000 s.f. or less, otherwise = 83.18 - 9.30 * Ln(A) where A is 1,000 s.f. of leasable area

f) For intensities under 10,000 s.f., use a rate of 9.9 / 1,000 s.f. instead of the equation.

g) Use these rates for a drive-in bank with up to 4 drive-thru lanes (excl. ATM lane). For additional drive-thru lanes, use per lane rates from ITE Code 912 (124.76 daily, 8.83 AM, 27.15 PM. Use same in/out splits)

h) ITE rate NA. Rate derived using PM to Daily ratio for ITE Code 937

i) FP=Fueling Position. Use both FP and Convenience Store size in estimating trips using the provided equation. Note that no internalization between the gas pumps and convenience store, as per ULDC Artice 12, should be applied to estimate the net trips.

j) Use PM rates

k) Daily rate taken from PBC trip gen. study. Peak hour rates derived by applying peak to daily ratios for gas station to daily carwash rate

l) Assume 50/50

m) Landscape Services acreage consists of overnight vehicle and equipment storage as well as areas (covered or uncovered) for chemicals, fertilizers, landscape materials (excluding plants) and other items needed for day-to-day operations. Not included are drive aisles, customer/employee parking, structures shared by nursery and landscape services, facilities that solely serve the onsite landscape activities or any nursery growing areas.

Modification History

**3/26/2019**: First published

**3/2/2020**: Added Landscape Services, modification history, edited formatting,

# Critical Movement Analysis




## Forest Ln & Military Trl

***Five Star Education***

***Input Data***

| | | |
|---|---|---|
| GR | = | 1.00% |
| Peak Season | = | 1.00 |
| Traffic Count Year | = | 2021 |
| Buildout Year | = | 2022 |
| Years | = | 1 |

| AM Peak Hour | | PM Peak Hour | | Proposed Development | |
|---|---|---|---|---|---|
| In | Out | In | Out | | |
| 44 | 40 | 18 | 21 | 62 | Student Day Care |
| | | | | 89 | Student K-5 |

**AM Peak Hour**

| AM | Eastbound | | | Westbound | | | Northbound | | | | Southbound | | | |
|---|---|---|---|---|---|---|---|---|---|---|---|---|---|---|
| | LT | Thru | RT | LT | Thru | RT | U | LT | Thru | RT | U | LT | Thru | RT |
| Volume 23-Mar-21 | - | - | 0 | - | - | 8 | 43 | 1 | 1,541 | 30 | 1 | 16 | 1,148 | 0 |
| Peak Season Volume | - | - | 0 | - | - | 8 | 43 | 1 | 1,541 | 30 | 1 | 16 | 1,148 | 0 |
| 2022 Historic Growth | - | - | 0 | - | - | 8 | 43 | 1 | 1,556 | 30 | 1 | 16 | 1,159 | 0 |
| Major Project Traffic | - | - | 0 | - | - | 0 | 0 | 0 | 19 | 0 | 0 | 0 | 25 | 0 |
| Major Project Traffic + 1% growth | - | - | 0 | - | - | 8 | 43 | 1 | 1,575 | 30 | 1 | 16 | 1,184 | 0 |
| % Project Traffic | - | - | - | - | - | 100% | - | - | - | - | - | - | - | - |
| Project Traffic Direction | - | - | - | - | - | OUT | - | - | - | - | - | - | - | - |
| Project Traffic | - | - | - | - | - | 40 | - | - | - | - | - | - | - | - |
| 2022 Total Traffic | - | - | 0 | - | - | 48 | 43 | 1 | 1,575 | 30 | 1 | 16 | 1,184 | 0 |

**PM Peak Hour**

| PM | Eastbound | | | Westbound | | | Northbound | | | | Southbound | | | |
|---|---|---|---|---|---|---|---|---|---|---|---|---|---|---|
| | LT | Thru | RT | LT | Thru | RT | U | LT | Thru | RT | U | LT | Thru | RT |
| Volume 23-Mar-21 | - | - | 0 | - | - | 3 | 28 | 2 | 1,592 | 12 | 17 | 11 | 1,680 | 0 |
| Peak Season Volume | - | - | 0 | - | - | 3 | 28 | 2 | 1,592 | 12 | 17 | 11 | 1,680 | 0 |
| 2022 Historic Growth | - | - | 0 | - | - | 3 | 28 | 2 | 1,608 | 12 | 17 | 11 | 1,697 | 0 |
| Major Project Traffic | - | - | 0 | - | - | 0 | 0 | 0 | 27 | 0 | 0 | 0 | 24 | 0 |
| Major Project Traffic + 1% growth | - | - | 0 | - | - | 3 | 28 | 2 | 1,635 | 12 | 17 | 11 | 1,721 | 0 |
| % Project Traffic | - | - | - | - | - | 100% | - | - | - | - | - | - | - | - |
| Project Traffic Direction | - | - | - | - | - | OUT | - | - | - | - | - | - | - | - |
| Project Traffic | - | - | - | - | - | 21 | - | - | - | - | - | - | - | - |
| 2022 Total Traffic[1] | - | - | 0 | - | - | 24 | 28 | 2 | 1,635 | 12 | 17 | 11 | 1,721 | 0 |

# HCS7 Two-Way Stop-Control Report

## General Information

| | |
|---|---|
| Analyst | JF |
| Agency/Co. | JFO GROUP INC |
| Date Performed | 03/24/2021 |
| Analysis Year | 2022 |
| Time Analyzed | AM |
| Intersection Orientation | North-South |
| Project Description | Five Star Education |

## Site Information

| | |
|---|---|
| Intersection | Military Trl & Forest Ln |
| Jurisdiction | F-DOT/Palm Springs |
| East/West Street | Forest Ln |
| North/South Street | Military Trl |
| Peak Hour Factor | 0.95 |
| Analysis Time Period (hrs) | 0.25 |

## Lanes

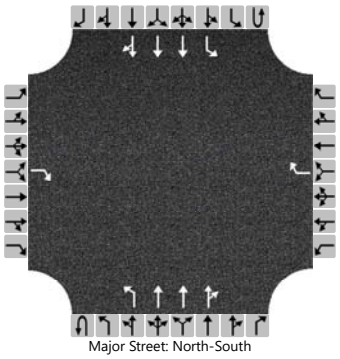

Major Street: North-South

## Vehicle Volumes and Adjustments

| Approach | Eastbound | | | | Westbound | | | | Northbound | | | | Southbound | | | |
|---|---|---|---|---|---|---|---|---|---|---|---|---|---|---|---|---|
| Movement | U | L | T | R | U | L | T | R | U | L | T | R | U | L | T | R |
| Priority | | 10 | 11 | 12 | | 7 | 8 | 9 | 1U | 1 | 2 | 3 | 4U | 4 | 5 | 6 |
| Number of Lanes | | 0 | 0 | 1 | | 0 | 0 | 1 | 0 | 1 | 3 | 0 | 0 | 1 | 3 | 0 |
| Configuration | | | | R | | | | R | | L | T | TR | | L | T | TR |
| Volume (veh/h) | | | | 0 | | | | 48 | 43 | 1 | 1575 | 30 | 1 | 16 | 1184 | 0 |
| Percent Heavy Vehicles (%) | | | | 2 | | | | 2 | 2 | 2 | | | 2 | 2 | | |
| Proportion Time Blocked | | | | | | | | | | | | | | | | |
| Percent Grade (%) | 0 | | | | 0 | | | | | | | | | | | |
| Right Turn Channelized | No | | | | No | | | | | | | | | | | |
| Median Type \| Storage | Left Only | | | | | | | | 1 | | | | | | | |

## Critical and Follow-up Headways

| | | | | | | | | | | | | | | | | |
|---|---|---|---|---|---|---|---|---|---|---|---|---|---|---|---|---|
| Base Critical Headway (sec) | | | | 7.1 | | | | 7.1 | 5.6 | 5.3 | | | 5.6 | 5.3 | | |
| Critical Headway (sec) | | | | 7.14 | | | | 7.14 | 5.64 | 5.34 | | | 5.64 | 5.34 | | |
| Base Follow-Up Headway (sec) | | | | 3.9 | | | | 3.9 | 2.3 | 3.1 | | | 2.3 | 3.1 | | |
| Follow-Up Headway (sec) | | | | 3.92 | | | | 3.92 | 2.32 | 3.12 | | | 2.32 | 3.12 | | |

## Delay, Queue Length, and Level of Service

| | | | | | | | | | | | | | | | | |
|---|---|---|---|---|---|---|---|---|---|---|---|---|---|---|---|---|
| Flow Rate, v (veh/h) | | | | 0 | | | | 51 | | 46 | | | | 18 | | |
| Capacity, c (veh/h) | | | | 368 | | | | 263 | | 486 | | | | 183 | | |
| v/c Ratio | | | | 0.00 | | | | 0.19 | | 0.10 | | | | 0.10 | | |
| 95% Queue Length, $Q_{95}$ (veh) | | | | 0.0 | | | | 0.7 | | 0.3 | | | | 0.3 | | |
| Control Delay (s/veh) | | | | 14.8 | | | | 21.9 | | 13.2 | | | | 26.8 | | |
| Level of Service (LOS) | | | | B | | | | C | | B | | | | D | | |
| Approach Delay (s/veh) | | | | | 21.9 | | | | 0.4 | | | | 0.4 | | | |
| Approach LOS | | | | | C | | | | | | | | | | | |

Copyright © 2021 University of Florida. All Rights Reserved.

# HCS7 Two-Way Stop-Control Report

## General Information

| | |
|---|---|
| Analyst | JF |
| Agency/Co. | JFO GROUP INC |
| Date Performed | 03/24/2021 |
| Analysis Year | 2022 |
| Time Analyzed | PM |
| Intersection Orientation | North-South |
| Project Description | Five Star Education |

## Site Information

| | |
|---|---|
| Intersection | Military Trl & Forest Ln |
| Jurisdiction | F-DOT/Palm Springs |
| East/West Street | Forest Ln |
| North/South Street | Military Trl |
| Peak Hour Factor | 0.95 |
| Analysis Time Period (hrs) | 0.25 |

## Lanes

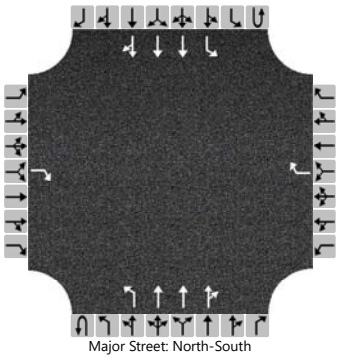

Major Street: North-South

## Vehicle Volumes and Adjustments

| Approach | Eastbound | | | | Westbound | | | | Northbound | | | | Southbound | | | |
|---|---|---|---|---|---|---|---|---|---|---|---|---|---|---|---|---|
| Movement | U | L | T | R | U | L | T | R | U | L | T | R | U | L | T | R |
| Priority | | 10 | 11 | 12 | | 7 | 8 | 9 | 1U | 1 | 2 | 3 | 4U | 4 | 5 | 6 |
| Number of Lanes | | 0 | 0 | 1 | | 0 | 0 | 1 | 0 | 1 | 3 | 0 | 0 | 1 | 3 | 0 |
| Configuration | | | | R | | | | R | | L | T | TR | | L | T | TR |
| Volume (veh/h) | | | | 0 | | | | 24 | 28 | 2 | 1635 | 12 | 17 | 11 | 1721 | 0 |
| Percent Heavy Vehicles (%) | | | | 2 | | | | 2 | 2 | 2 | | | 2 | 2 | | |
| Proportion Time Blocked | | | | | | | | | | | | | | | | |
| Percent Grade (%) | 0 | | | | 0 | | | | | | | | | | | |
| Right Turn Channelized | No | | | | No | | | | | | | | | | | |
| Median Type \| Storage | Left Only | | | | | | | | 1 | | | | | | | |

## Critical and Follow-up Headways

| | | | | | | | | | | | | | | | | |
|---|---|---|---|---|---|---|---|---|---|---|---|---|---|---|---|---|
| Base Critical Headway (sec) | | | | 7.1 | | | | 7.1 | 5.6 | 5.3 | | | 5.6 | 5.3 | | |
| Critical Headway (sec) | | | | 7.14 | | | | 7.14 | 5.64 | 5.34 | | | 5.64 | 5.34 | | |
| Base Follow-Up Headway (sec) | | | | 3.9 | | | | 3.9 | 2.3 | 3.1 | | | 2.3 | 3.1 | | |
| Follow-Up Headway (sec) | | | | 3.92 | | | | 3.92 | 2.32 | 3.12 | | | 2.32 | 3.12 | | |

## Delay, Queue Length, and Level of Service

| | | | | | | | | | | | | | | | | |
|---|---|---|---|---|---|---|---|---|---|---|---|---|---|---|---|---|
| Flow Rate, v (veh/h) | | | | 0 | | | | 25 | | 32 | | | | 29 | | |
| Capacity, c (veh/h) | | | | 240 | | | | 254 | | 275 | | | | 224 | | |
| v/c Ratio | | | | 0.00 | | | | 0.10 | | 0.12 | | | | 0.13 | | |
| 95% Queue Length, $Q_{95}$ (veh) | | | | 0.0 | | | | 0.3 | | 0.4 | | | | 0.4 | | |
| Control Delay (s/veh) | | | | 20.0 | | | | 20.7 | | 19.8 | | | | 23.5 | | |
| Level of Service (LOS) | | | | C | | | | C | | C | | | | C | | |
| Approach Delay (s/veh) | | | | | 20.7 | | | | 0.4 | | | | 0.4 | | | |
| Approach LOS | | | | | C | | | | | | | | | | | |

Copyright © 2021 University of Florida. All Rights Reserved.

KMF Traffic Group, LLC
www.kmftraffic.net
772-221-7971

Manual Traffic Count - All Traffic
Military Trail and Forest Ln
West Palm Beach, FL

File Name : FOREST
Site Code : JO2103
Start Date : 3/23/2023
Page No : 1

Groups Printed- ALL TRAFFIC

| | Military Trail NB | | | | Military Trail SB | | | | Driveway EB | | | | Forest Ln WB | | | |
|---|---|---|---|---|---|---|---|---|---|---|---|---|---|---|---|---|
| Start Time | Right | Thru | Left | UTurn | Right | Thru | Left | UTurn | Right | Thru | Left | Peds | Right | Thru | Left | Int. Total |
| 07:00 AM | 7 | 254 | 0 | 8 | 0 | 250 | 4 | 0 | 0 | 0 | 0 | 0 | 1 | 0 | 0 | 524 |
| 07:15 AM | 12 | 307 | 0 | 7 | 0 | 257 | 3 | 1 | 0 | 0 | 0 | 0 | 4 | 0 | 0 | 591 |
| 07:30 AM | 12 | 420 | 0 | 12 | 0 | 300 | 4 | 0 | 0 | 0 | 0 | 0 | 5 | 0 | 0 | 753 |
| 07:45 AM | 8 | 376 | 1 | 13 | 0 | 309 | 5 | 0 | 0 | 0 | 0 | 0 | 3 | 0 | 0 | 715 |
| Total | 39 | 1357 | 1 | 40 | 0 | 1116 | 16 | 1 | 0 | 0 | 0 | 0 | 13 | 0 | 0 | 2583 |
| 08:00 AM | 7 | 381 | 0 | 12 | 0 | 263 | 6 | 0 | 0 | 0 | 0 | 0 | 0 | 0 | 0 | 669 |
| 08:15 AM | 3 | 364 | 0 | 6 | 0 | 276 | 1 | 1 | 0 | 0 | 0 | 0 | 0 | 0 | 0 | 651 |
| 08:30 AM | 2 | 293 | 0 | 8 | 0 | 290 | 1 | 0 | 1 | 0 | 0 | 0 | 2 | 0 | 0 | 597 |
| 08:45 AM | 1 | 290 | 1 | 6 | 0 | 0 | 2 | 3 | 1 | 0 | 0 | 0 | 1 | 0 | 0 | 305 |
| Total | 13 | 1328 | 1 | 32 | 0 | 829 | 10 | 4 | 2 | 0 | 0 | 0 | 3 | 0 | 0 | 2222 |
| *** BREAK *** | | | | | | | | | | | | | | | | |
| 04:00 PM | 2 | 374 | 0 | 8 | 0 | 418 | 4 | 3 | 0 | 0 | 0 | 0 | 2 | 0 | 0 | 811 |
| 04:15 PM | 3 | 325 | 1 | 3 | 0 | 378 | 2 | 2 | 0 | 0 | 0 | 0 | 2 | 0 | 0 | 716 |
| 04:30 PM | 0 | 386 | 0 | 4 | 0 | 397 | 5 | 6 | 0 | 0 | 0 | 0 | 1 | 0 | 0 | 799 |
| 04:45 PM | 3 | 353 | 0 | 10 | 0 | 405 | 2 | 6 | 0 | 0 | 0 | 0 | 2 | 0 | 0 | 781 |
| Total | 8 | 1438 | 1 | 25 | 0 | 1598 | 13 | 17 | 0 | 0 | 0 | 0 | 7 | 0 | 0 | 3107 |
| 05:00 PM | 3 | 364 | 1 | 5 | 0 | 397 | 3 | 3 | 0 | 0 | 0 | 0 | 1 | 0 | 0 | 777 |
| 05:15 PM | 7 | 420 | 0 | 5 | 0 | 431 | 7 | 4 | 0 | 0 | 0 | 0 | 0 | 0 | 0 | 874 |
| 05:30 PM | 2 | 408 | 1 | 9 | 0 | 443 | 1 | 7 | 0 | 0 | 0 | 0 | 1 | 0 | 0 | 872 |
| 05:45 PM | 0 | 400 | 0 | 9 | 0 | 409 | 0 | 3 | 0 | 0 | 0 | 0 | 1 | 0 | 0 | 822 |
| Total | 12 | 1592 | 2 | 28 | 0 | 1680 | 11 | 17 | 0 | 0 | 0 | 0 | 3 | 0 | 0 | 3345 |
| Grand Total | 72 | 5715 | 5 | 125 | 0 | 5223 | 50 | 39 | 2 | 0 | 0 | 0 | 26 | 0 | 0 | 11257 |
| Apprch % | 1.2 | 96.6 | 0.1 | 2.1 | 0 | 98.3 | 0.9 | 0.7 | 100 | 0 | 0 | 0 | 100 | 0 | 0 | |
| Total % | 0.6 | 50.8 | 0 | 1.1 | 0 | 46.4 | 0.4 | 0.3 | 0 | 0 | 0 | 0 | 0.2 | 0 | 0 | |

KMF Traffic Group, LLC
www.kmftraffic.net
772-221-7971

Manual Traffic Count - All Traffic
Military Trail and Forest Ln
West Palm Beach, FL

File Name : FOREST
Site Code : JO2103
Start Date : 3/23/2023
Page No : 2

| | Military Trail NB | | | | | Military Trail SB | | | | | Driveway EB | | | | | Forest Ln WB | | | | |
|---|---|---|---|---|---|---|---|---|---|---|---|---|---|---|---|---|---|---|---|---|
| Start Time | Right | Thru | Left | UTurn | App. Total | Right | Thru | Left | UTurn | App. Total | Right | Thru | Left | Peds | App. Total | Right | Thru | Left | App. Total | Int. Total |
| Peak Hour Analysis From 07:00 AM to 08:45 AM - Peak 1 of 1 | | | | | | | | | | | | | | | | | | | | |
| Peak Hour for Entire Intersection Begins at 07:30 AM | | | | | | | | | | | | | | | | | | | | |
| 07:30 AM | 12 | 420 | 0 | 12 | 444 | 0 | 300 | 4 | 0 | 304 | 0 | 0 | 0 | 0 | 0 | 5 | 0 | 0 | 5 | 753 |
| 07:45 AM | 8 | 376 | 1 | 13 | 398 | 0 | 309 | 5 | 0 | 314 | 0 | 0 | 0 | 0 | 0 | 3 | 0 | 0 | 3 | 715 |
| 08:00 AM | 7 | 381 | 0 | 12 | 400 | 0 | 263 | 6 | 0 | 269 | 0 | 0 | 0 | 0 | 0 | 0 | 0 | 0 | 0 | 669 |
| 08:15 AM | 3 | 364 | 0 | 6 | 373 | 0 | 276 | 1 | 1 | 278 | 0 | 0 | 0 | 0 | 0 | 0 | 0 | 0 | 0 | 651 |
| Total Volume | 30 | 1541 | 1 | 43 | 1615 | 0 | 1148 | 16 | 1 | 1165 | 0 | 0 | 0 | 0 | 0 | 8 | 0 | 0 | 8 | 2788 |
| % App. Total | 1.9 | 95.4 | 0.1 | 2.7 | | 0 | 98.5 | 1.4 | 0.1 | | 0 | 0 | 0 | 0 | | 100 | 0 | 0 | | |
| PHF | .625 | .917 | .250 | .827 | .909 | .000 | .929 | .667 | .250 | .928 | .000 | .000 | .000 | .000 | .000 | .400 | .000 | .000 | .400 | .926 |

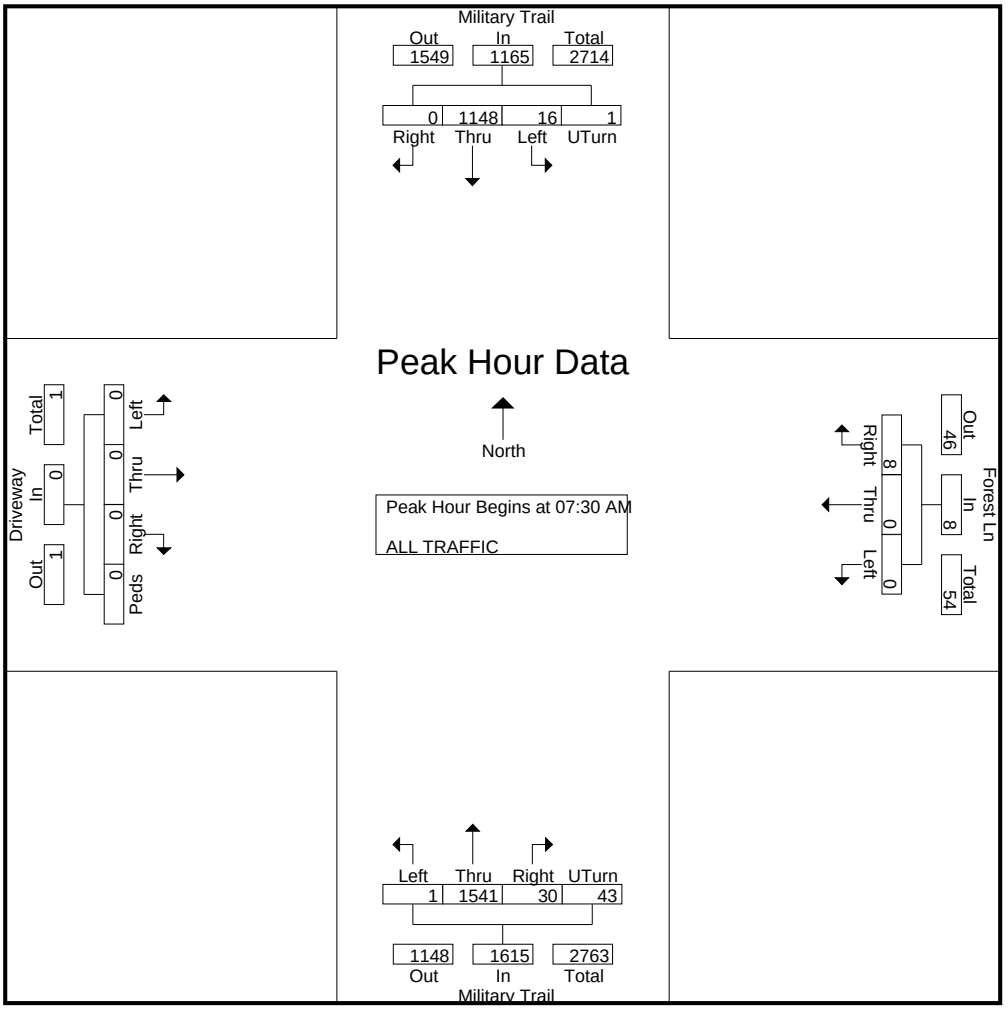

KMF Traffic Group, LLC
www.kmftraffic.net
772-221-7971

Manual Traffic Count - All Traffic
Military Trail and Forest Ln
West Palm Beach, FL

File Name : FOREST
Site Code : JO2103
Start Date : 3/23/2023
Page No : 3

| | Military Trail NB | | | | | Military Trail SB | | | | | Driveway EB | | | | | Forest Ln WB | | | | |
|---|---|---|---|---|---|---|---|---|---|---|---|---|---|---|---|---|---|---|---|---|
| Start Time | Right | Thru | Left | UTurn | App. Total | Right | Thru | Left | UTurn | App. Total | Right | Thru | Left | Peds | App. Total | Right | Thru | Left | App. Total | Int. Total |
| Peak Hour Analysis From 04:00 PM to 05:45 PM - Peak 1 of 1 | | | | | | | | | | | | | | | | | | | | |
| Peak Hour for Entire Intersection Begins at 05:00 PM | | | | | | | | | | | | | | | | | | | | |
| 05:00 PM | 3 | 364 | 1 | 5 | 373 | 0 | 397 | 3 | 3 | 403 | 0 | 0 | 0 | 0 | 0 | 1 | 0 | 0 | 1 | 777 |
| 05:15 PM | 7 | 420 | 0 | 5 | 432 | 0 | 431 | 7 | 4 | 442 | 0 | 0 | 0 | 0 | 0 | 0 | 0 | 0 | 0 | 874 |
| 05:30 PM | 2 | 408 | 1 | 9 | 420 | 0 | 443 | 1 | 7 | 451 | 0 | 0 | 0 | 0 | 0 | 1 | 0 | 0 | 1 | 872 |
| 05:45 PM | 0 | 400 | 0 | 9 | 409 | 0 | 409 | 0 | 3 | 412 | 0 | 0 | 0 | 0 | 0 | 1 | 0 | 0 | 1 | 822 |
| Total Volume | 12 | 1592 | 2 | 28 | 1634 | 0 | 1680 | 11 | 17 | 1708 | 0 | 0 | 0 | 0 | 0 | 3 | 0 | 0 | 3 | 3345 |
| % App. Total | 0.7 | 97.4 | 0.1 | 1.7 | | 0 | 98.4 | 0.6 | 1 | | 0 | 0 | 0 | 0 | | 100 | 0 | 0 | | |
| PHF | .429 | .948 | .500 | .778 | .946 | .000 | .948 | .393 | .607 | .947 | .000 | .000 | .000 | .000 | .000 | .750 | .000 | .000 | .750 | .957 |

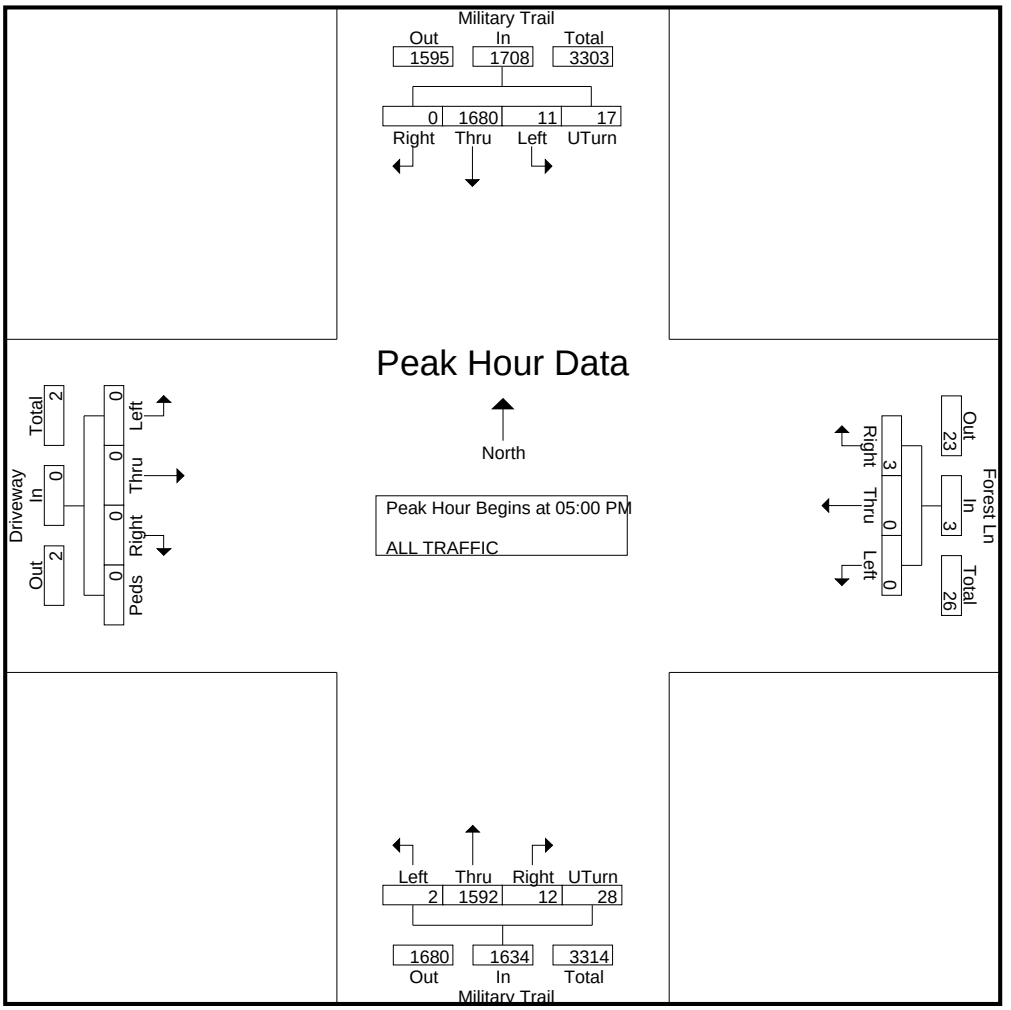

# Critical Movement Analysis




## Cypress Way W & Military Trl

***Five Star Education***

***Input Data***

| | | |
|---|---|---|
| GR | = | 1.00% |
| Peak Season | = | 1.00 |
| Traffic Count Year | = | 2021 |
| Buildout Year | = | 2022 |
| Years | = | 1 |

| AM Peak Hour | | PM Peak Hour | | Proposed Development | |
|---|---|---|---|---|---|
| In | Out | In | Out | | |
| 44 | 40 | 18 | 21 | 62 | Student Day Care |
| | | | | 89 | Student K-5 |

**AM Peak Hour**

| AM | Eastbound | | | Westbound | | | Northbound | | | Southbound | | |
|---|---|---|---|---|---|---|---|---|---|---|---|---|
| | LT | Thru | RT | LT | Thru | RT | LT | Thru | RT | LT | Thru | RT |
| Volume 23-Mar-21 | - | - | - | - | - | 43 | - | 1,571 | 20 | - | 1,164 | - |
| Peak Season Volume | - | - | - | - | - | 43 | - | 1,571 | 20 | - | 1,164 | - |
| 2022 Historic Growth | - | - | - | - | - | 43 | - | 1,587 | 20 | - | 1,176 | - |
| Major Project Traffic | - | - | - | - | - | 0 | - | 19 | 0 | - | 25 | - |
| Major Project Traffic + 1% growth | - | - | - | - | - | 43 | - | 1,606 | 20 | - | 1,201 | - |
| % Project Traffic | - | - | - | - | - | - | - | - | 100% | - | 50% | - |
| Project Traffic Direction | - | - | - | - | - | - | - | - | IN | - | OUT | - |
| Project Traffic | - | - | - | - | - | - | - | - | 44 | - | 20 | - |
| 2022 Total Traffic | - | - | - | - | - | 43 | - | 1,606 | 64 | - | 1,221 | - |

**PM Peak Hour**

| PM | Eastbound | | | Westbound | | | Northbound | | | Southbound | | |
|---|---|---|---|---|---|---|---|---|---|---|---|---|
| | LT | Thru | RT | LT | Thru | RT | LT | Thru | RT | LT | Thru | RT |
| Volume 23-Mar-21 | - | - | - | - | - | 43 | - | 1,589 | 34 | - | 1,691 | - |
| Peak Season Volume | - | - | - | - | - | 43 | - | 1,589 | 34 | - | 1,691 | - |
| 2022 Historic Growth | - | - | - | - | - | 43 | - | 1,605 | 34 | - | 1,708 | - |
| Major Project Traffic | - | - | - | - | - | 0 | - | 27 | 0 | - | 24 | - |
| Major Project Traffic + 1% growth | - | - | - | - | - | 43 | - | 1,632 | 34 | - | 1,732 | - |
| % Project Traffic | - | - | - | - | - | - | - | - | 100% | - | 50% | - |
| Project Traffic Direction | - | - | - | - | - | - | - | - | IN | - | OUT | - |
| Project Traffic | - | - | - | - | - | - | - | - | 18 | - | 11 | - |
| 2022 Total Traffic | - | - | - | - | - | 43 | - | 1,632 | 52 | - | 1,743 | - |

# HCS7 Two-Way Stop-Control Report

## General Information

| | |
|---|---|
| Analyst | JF |
| Agency/Co. | JFO GROUP INC |
| Date Performed | 03/24/2021 |
| Analysis Year | 2022 |
| Time Analyzed | AM |
| Intersection Orientation | North-South |
| Project Description | Five Star Education |

## Site Information

| | |
|---|---|
| Intersection | Military Trl & Cypress Wa |
| Jurisdiction | F-DOT/Palm Springs |
| East/West Street | Cypress Way W |
| North/South Street | Military Trl |
| Peak Hour Factor | 0.95 |
| Analysis Time Period (hrs) | 0.25 |

## Lanes

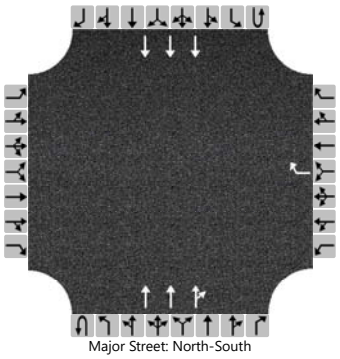
Major Street: North-South

## Vehicle Volumes and Adjustments

| Approach | Eastbound | | | | Westbound | | | | Northbound | | | | Southbound | | | |
|---|---|---|---|---|---|---|---|---|---|---|---|---|---|---|---|---|
| Movement | U | L | T | R | U | L | T | R | U | L | T | R | U | L | T | R |
| Priority | | 10 | 11 | 12 | | 7 | 8 | 9 | 1U | 1 | 2 | 3 | 4U | 4 | 5 | 6 |
| Number of Lanes | | 0 | 0 | 0 | | 0 | 0 | 1 | 0 | 0 | 3 | 0 | 0 | 0 | 3 | 0 |
| Configuration | | | | | | | | R | | | T | TR | | | T | |
| Volume (veh/h) | | | | | | | | 43 | | | 1606 | 64 | | | 1221 | |
| Percent Heavy Vehicles (%) | | | | | | | | 2 | | | | | | | | |
| Proportion Time Blocked | | | | | | | | | | | | | | | | |
| Percent Grade (%) | | | | | | 0 | | | | | | | | | | |
| Right Turn Channelized | | | | | | No | | | | | | | | | | |
| Median Type \| Storage | | Left Only | | | | | | | | 1 | | | | | | |

## Critical and Follow-up Headways

| | | | | | | | | | | | | | | | | |
|---|---|---|---|---|---|---|---|---|---|---|---|---|---|---|---|---|
| Base Critical Headway (sec) | | | | | | | | 7.1 | | | | | | | | |
| Critical Headway (sec) | | | | | | | | 7.14 | | | | | | | | |
| Base Follow-Up Headway (sec) | | | | | | | | 3.9 | | | | | | | | |
| Follow-Up Headway (sec) | | | | | | | | 3.92 | | | | | | | | |

## Delay, Queue Length, and Level of Service

| | | | | | | | | | | | | | | | | |
|---|---|---|---|---|---|---|---|---|---|---|---|---|---|---|---|---|
| Flow Rate, v (veh/h) | | | | | | | | 45 | | | | | | | | |
| Capacity, c (veh/h) | | | | | | | | 250 | | | | | | | | |
| v/c Ratio | | | | | | | | 0.18 | | | | | | | | |
| 95% Queue Length, $Q_{95}$ (veh) | | | | | | | | 0.6 | | | | | | | | |
| Control Delay (s/veh) | | | | | | | | 22.6 | | | | | | | | |
| Level of Service (LOS) | | | | | | | | C | | | | | | | | |
| Approach Delay (s/veh) | | | | | | 22.6 | | | | | | | | | | |
| Approach LOS | | | | | | C | | | | | | | | | | |

Copyright © 2021 University of Florida. All Rights Reserved.

# HCS7 Two-Way Stop-Control Report

| General Information | | Site Information | |
|---|---|---|---|
| Analyst | JF | Intersection | Military Trl & Cypress Wa |
| Agency/Co. | JFO GROUP INC | Jurisdiction | F-DOT/Palm Springs |
| Date Performed | 03/24/2021 | East/West Street | Cypress Way W |
| Analysis Year | 2022 | North/South Street | Military Trl |
| Time Analyzed | PM | Peak Hour Factor | 0.95 |
| Intersection Orientation | North-South | Analysis Time Period (hrs) | 0.25 |
| Project Description | Five Star Education | | |

## Lanes

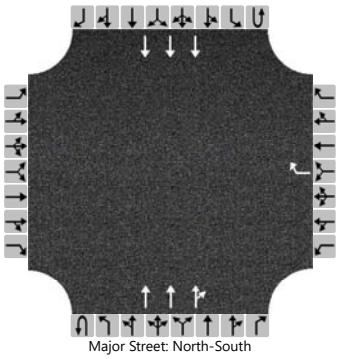
Major Street: North-South

## Vehicle Volumes and Adjustments

| Approach | Eastbound | | | | Westbound | | | | Northbound | | | | Southbound | | | |
|---|---|---|---|---|---|---|---|---|---|---|---|---|---|---|---|---|
| Movement | U | L | T | R | U | L | T | R | U | L | T | R | U | L | T | R |
| Priority | | 10 | 11 | 12 | | 7 | 8 | 9 | 1U | 1 | 2 | 3 | 4U | 4 | 5 | 6 |
| Number of Lanes | | 0 | 0 | 0 | | 0 | 0 | 1 | 0 | 0 | 3 | 0 | 0 | 0 | 3 | 0 |
| Configuration | | | | | | | | R | | | T | TR | | | T | |
| Volume (veh/h) | | | | | | | | 43 | | | 1632 | 52 | | | 1743 | |
| Percent Heavy Vehicles (%) | | | | | | | | 2 | | | | | | | | |
| Proportion Time Blocked | | | | | | | | | | | | | | | | |
| Percent Grade (%) | | | | | | 0 | | | | | | | | | | |
| Right Turn Channelized | | | | | | No | | | | | | | | | | |
| Median Type \| Storage | | Left Only | | | | | | | | 1 | | | | | | |

## Critical and Follow-up Headways

| | | | | | | | | | | | | | | | | |
|---|---|---|---|---|---|---|---|---|---|---|---|---|---|---|---|---|
| Base Critical Headway (sec) | | | | | | | | 7.1 | | | | | | | | |
| Critical Headway (sec) | | | | | | | | 7.14 | | | | | | | | |
| Base Follow-Up Headway (sec) | | | | | | | | 3.9 | | | | | | | | |
| Follow-Up Headway (sec) | | | | | | | | 3.92 | | | | | | | | |

## Delay, Queue Length, and Level of Service

| | | | | | | | | | | | | | | | | |
|---|---|---|---|---|---|---|---|---|---|---|---|---|---|---|---|---|
| Flow Rate, v (veh/h) | | | | | | | | 45 | | | | | | | | |
| Capacity, c (veh/h) | | | | | | | | 247 | | | | | | | | |
| v/c Ratio | | | | | | | | 0.18 | | | | | | | | |
| 95% Queue Length, $Q_{95}$ (veh) | | | | | | | | 0.7 | | | | | | | | |
| Control Delay (s/veh) | | | | | | | | 22.8 | | | | | | | | |
| Level of Service (LOS) | | | | | | | | C | | | | | | | | |
| Approach Delay (s/veh) | | | | | | 22.8 | | | | | | | | | | |
| Approach LOS | | | | | | C | | | | | | | | | | |

Copyright © 2021 University of Florida. All Rights Reserved.

KMF Traffic Group, LLC
www.kmftraffic.net
772-221-7971

Manual Traffic Count - All Traffic
Military Trail and Cypress Way
West Palm Beach, FL

File Name : CYPRESS
Site Code : JO2103
Start Date : 3/23/2021
Page No : 1

Groups Printed- ALL TRAFFIC

| | Military Trail NB | | Military Trail SB | | Cypress Way WB | | |
|---|---|---|---|---|---|---|---|
| Start Time | Right | Thru | Thru | Left | Right | Left | Int. Total |
| 07:00 AM | 3 | 261 | 254 | 0 | 9 | 0 | 527 |
| 07:15 AM | 5 | 319 | 260 | 0 | 18 | 0 | 602 |
| 07:30 AM | 7 | 432 | 304 | 0 | 17 | 0 | 760 |
| 07:45 AM | 5 | 384 | 314 | 0 | 10 | 0 | 713 |
| Total | 20 | 1396 | 1132 | 0 | 54 | 0 | 2602 |
| | | | | | | | |
| 08:00 AM | 4 | 388 | 269 | 0 | 9 | 0 | 670 |
| 08:15 AM | 4 | 367 | 277 | 0 | 7 | 0 | 655 |
| 08:30 AM | 7 | 295 | 291 | 0 | 7 | 0 | 600 |
| 08:45 AM | 1 | 291 | 269 | 0 | 5 | 0 | 566 |
| Total | 16 | 1341 | 1106 | 0 | 28 | 0 | 2491 |
| | | | | | | | |
| *** BREAK *** | | | | | | | |
| | | | | | | | |
| 04:00 PM | 9 | 377 | 422 | 0 | 7 | 0 | 815 |
| 04:15 PM | 5 | 326 | 380 | 0 | 5 | 0 | 716 |
| 04:30 PM | 5 | 382 | 402 | 0 | 8 | 0 | 797 |
| 04:45 PM | 7 | 359 | 407 | 0 | 7 | 0 | 780 |
| Total | 26 | 1444 | 1611 | 0 | 27 | 0 | 3108 |
| | | | | | | | |
| 05:00 PM | 11 | 362 | 400 | 0 | 10 | 0 | 783 |
| 05:15 PM | 9 | 422 | 438 | 0 | 10 | 0 | 879 |
| 05:30 PM | 8 | 408 | 444 | 0 | 11 | 0 | 871 |
| 05:45 PM | 6 | 397 | 409 | 0 | 12 | 0 | 824 |
| Total | 34 | 1589 | 1691 | 0 | 43 | 0 | 3357 |
| | | | | | | | |
| Grand Total | 96 | 5770 | 5540 | 0 | 152 | 0 | 11558 |
| Apprch % | 1.6 | 98.4 | 100 | 0 | 100 | 0 | |
| Total % | 0.8 | 49.9 | 47.9 | 0 | 1.3 | 0 | |

KMF Traffic Group, LLC
www.kmftraffic.net
772-221-7971

Manual Traffic Count - All Traffic
Military Trail and Cypress Way
West Palm Beach, FL

File Name : CYPRESS
Site Code : JO2103
Start Date : 3/23/2021


| | Military Trail NB | | | Military Trail SB | | | Cypress Way WB | | | |
|---|---|---|---|---|---|---|---|---|---|---|
| Start Time | Right | Thru | App. Total | Thru | Left | App. Total | Right | Left | App. Total | Int. Total |
| Peak Hour Analysis From 07:00 AM to 08:45 AM - Peak 1 of 1 | | | | | | | | | | |
| Peak Hour for Entire Intersection Begins at 07:30 AM | | | | | | | | | | |
| 07:30 AM | 7 | 432 | 439 | 304 | 0 | 304 | 17 | 0 | 17 | 760 |
| 07:45 AM | 5 | 384 | 389 | 314 | 0 | 314 | 10 | 0 | 10 | 713 |
| 08:00 AM | 4 | 388 | 392 | 269 | 0 | 269 | 9 | 0 | 9 | 670 |
| 08:15 AM | 4 | 367 | 371 | 277 | 0 | 277 | 7 | 0 | 7 | 655 |
| Total Volume | 20 | 1571 | 1591 | 1164 | 0 | 1164 | 43 | 0 | 43 | 2798 |
| % App. Total | 1.3 | 98.7 | | 100 | 0 | | 100 | 0 | | |
| PHF | .714 | .909 | .906 | .927 | .000 | .927 | .632 | .000 | .632 | .920 |

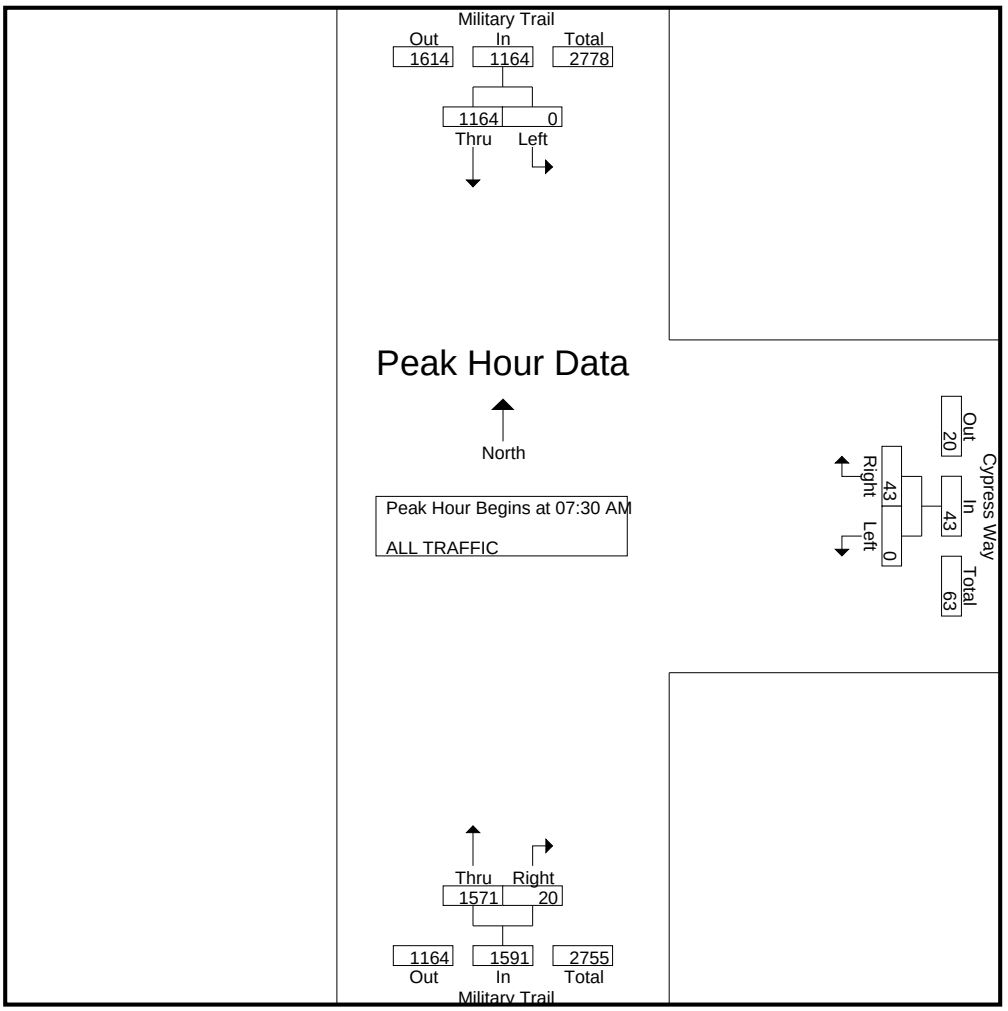

KMF Traffic Group, LLC
www.kmftraffic.net
772-221-7971

Manual Traffic Count - All Traffic
Military Trail and Cypress Way
West Palm Beach, FL

File Name : CYPRESS
Site Code : JO2103
Start Date : 3/23/2021
Page No : 3

| | Military Trail NB | | | Military Trail SB | | | Cypress Way WB | | | |
|---|---|---|---|---|---|---|---|---|---|---|
| Start Time | Right | Thru | App. Total | Thru | Left | App. Total | Right | Left | App. Total | Int. Total |
| Peak Hour Analysis From 04:00 PM to 05:45 PM - Peak 1 of 1 | | | | | | | | | | |
| Peak Hour for Entire Intersection Begins at 05:00 PM | | | | | | | | | | |
| 05:00 PM | 11 | 362 | 373 | 400 | 0 | 400 | 10 | 0 | 10 | 783 |
| 05:15 PM | 9 | 422 | 431 | 438 | 0 | 438 | 10 | 0 | 10 | 879 |
| 05:30 PM | 8 | 408 | 416 | 444 | 0 | 444 | 11 | 0 | 11 | 871 |
| 05:45 PM | 6 | 397 | 403 | 409 | 0 | 409 | 12 | 0 | 12 | 824 |
| Total Volume | 34 | 1589 | 1623 | 1691 | 0 | 1691 | 43 | 0 | 43 | 3357 |
| % App. Total | 2.1 | 97.9 | | 100 | 0 | | 100 | 0 | | |
| PHF | .773 | .941 | .941 | .952 | .000 | .952 | .896 | .000 | .896 | .955 |

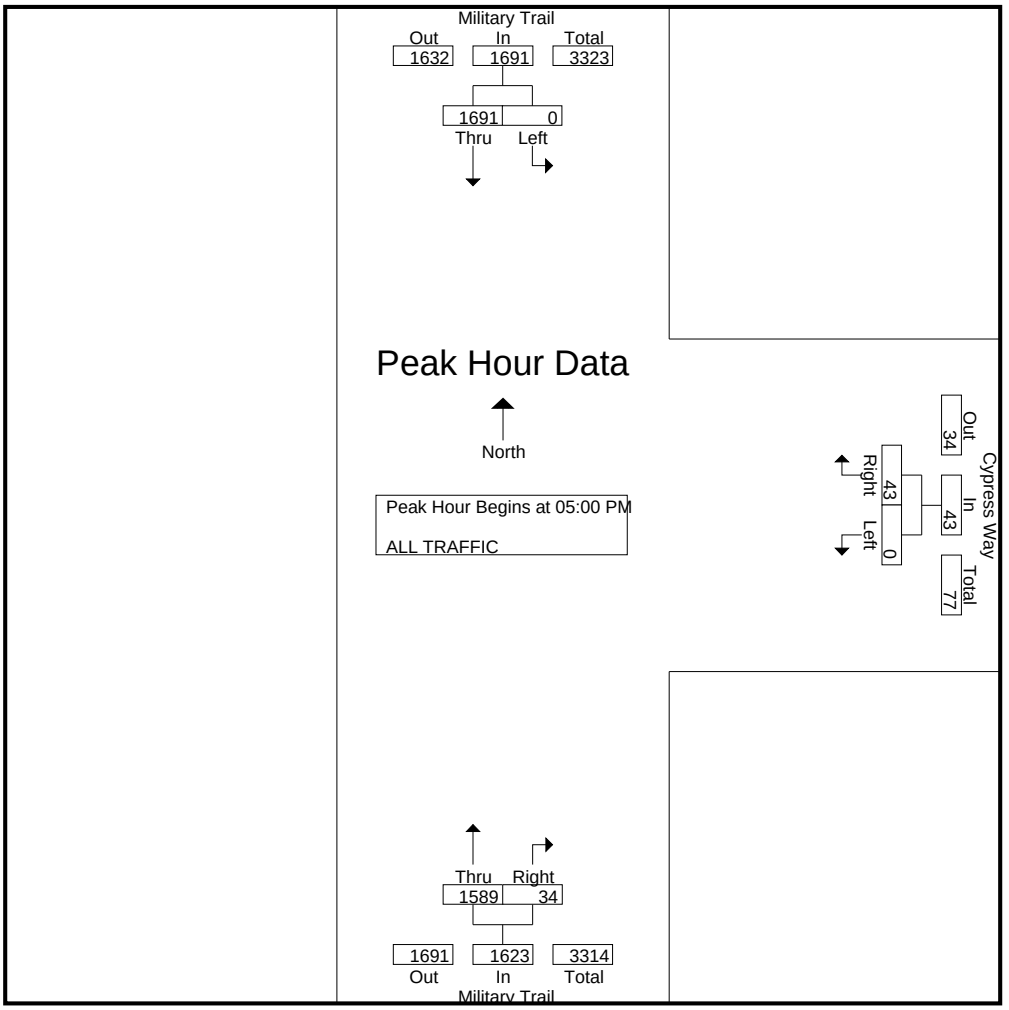

# Critical Movement Analysis




## Cypress Way W & Military Trl

***Five Star Education***

***Input Data***

| | | |
|---|---|---|
| GR | = | 1.00% |
| Peak Season | = | 1.00 |
| Traffic Count Year | = | 2021 |
| Buildout Year | = | 2022 |
| Years | = | 1 |

| AM Peak Hour | | PM Peak Hour | | Proposed Development | |
|---|---|---|---|---|---|
| In | Out | In | Out | | |
| 44 | 40 | 18 | 21 | 62 | Student Day Care |
| | | | | 89 | Student K-5 |

**AM Peak Hour**

| AM | Eastbound | | | Westbound | | | Northbound | | | | Southbound | | | |
|---|---|---|---|---|---|---|---|---|---|---|---|---|---|---|
| | LT | Thru | RT | LT | Thru | RT | U | LT | Thru | RT | U | LT | Thru | RT |
| Volume 23-Mar-21 | - | - | - | - | - | 8 | 30 | - | 1,563 | 2 | 10 | 15 | 1,139 | - |
| Peak Season Volume | - | - | - | - | - | 8 | 30 | - | 1,563 | 2 | 10 | 15 | 1,139 | - |
| 2022 Historic Growth | - | - | - | - | - | 8 | 30 | - | 1,579 | 2 | 10 | 15 | 1,150 | - |
| Major Project Traffic | - | - | - | - | - | 0 | 0 | - | 19 | 0 | 0 | 0 | 25 | - |
| Major Project Traffic + 1% growth | - | - | - | - | - | 8 | 30 | - | 1,598 | 2 | 10 | 15 | 1,175 | - |
| % Project Traffic | - | - | - | - | - | - | - | - | 50% | - | 50% | - | 50% | - |
| Project Traffic Direction | - | - | - | - | - | - | - | - | IN | - | IN | - | OUT | - |
| Project Traffic | - | - | - | - | - | - | - | - | 22 | - | 22 | - | 20 | - |
| 2022 Total Traffic | - | - | - | - | - | 8 | 30 | - | 1,620 | 2 | 32 | 15 | 1,195 | - |

**PM Peak Hour**

| PM | Eastbound | | | Westbound | | | Northbound | | | | Southbound | | | |
|---|---|---|---|---|---|---|---|---|---|---|---|---|---|---|
| | LT | Thru | RT | LT | Thru | RT | U | LT | Thru | RT | U | LT | Thru | RT |
| Volume 23-Mar-21 | - | - | - | - | - | 10 | 26 | - | 1,600 | 2 | 13 | 11 | 1,667 | - |
| Peak Season Volume | - | - | - | - | - | 10 | 26 | - | 1,600 | 2 | 13 | 11 | 1,667 | - |
| 2022 Historic Growth | - | - | - | - | - | 10 | 26 | - | 1,616 | 2 | 13 | 11 | 1,684 | - |
| Major Project Traffic | - | - | - | - | - | 0 | 0 | - | 27 | 0 | 0 | 0 | 24 | - |
| Major Project Traffic + 1% growth | - | - | - | - | - | 10 | 26 | - | 1,643 | 2 | 13 | 11 | 1,708 | - |
| % Project Traffic | - | - | - | - | - | - | - | - | 50% | - | 50% | - | 50% | - |
| Project Traffic Direction | - | - | - | - | - | - | - | - | IN | - | IN | - | OUT | - |
| Project Traffic | - | - | - | - | - | - | - | - | 9 | - | 9 | - | 11 | - |
| 2022 Total Traffic[1] | - | - | - | - | - | 10 | 26 | - | 1,652 | 2 | 22 | 11 | 1,719 | - |

# HCS7 Two-Way Stop-Control Report

## General Information

| | |
|---|---|
| Analyst | JF |
| Agency/Co. | JFO GROUP INC |
| Date Performed | 03/24/2021 |
| Analysis Year | 2022 |
| Time Analyzed | AM |
| Intersection Orientation | North-South |
| Project Description | Five Star Education |

## Site Information

| | |
|---|---|
| Intersection | Military Trl & U-turn |
| Jurisdiction | F-DOT |
| East/West Street | U-Turn |
| North/South Street | Military Trl |
| Peak Hour Factor | 0.95 |
| Analysis Time Period (hrs) | 0.25 |

## Lanes

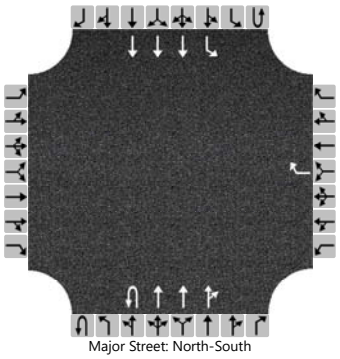
Major Street: North-South

## Vehicle Volumes and Adjustments

| Approach | Eastbound | | | | Westbound | | | | Northbound | | | | Southbound | | | |
|---|---|---|---|---|---|---|---|---|---|---|---|---|---|---|---|---|
| Movement | U | L | T | R | U | L | T | R | U | L | T | R | U | L | T | R |
| Priority | | 10 | 11 | 12 | | 7 | 8 | 9 | 1U | 1 | 2 | 3 | 4U | 4 | 5 | 6 |
| Number of Lanes | | 0 | 0 | 0 | | 0 | 0 | 1 | 1 | 0 | 3 | 0 | 0 | 1 | 3 | 0 |
| Configuration | | | | | | | | R | U | | T | TR | | L | T | |
| Volume (veh/h) | | | | | | | | 8 | 30 | | 1620 | 2 | 32 | 15 | 1195 | |
| Percent Heavy Vehicles (%) | | | | | | | | 2 | 2 | | | | 2 | 2 | | |
| Proportion Time Blocked | | | | | | | | | | | | | | | | |
| Percent Grade (%) | | | | | | 0 | | | | | | | | | | |
| Right Turn Channelized | | | | | | No | | | | | | | | | | |
| Median Type \| Storage | | | | | | Left Only | | | | | | | | 1 | | |

## Critical and Follow-up Headways

| | | | | | | | | | | | | | | | | |
|---|---|---|---|---|---|---|---|---|---|---|---|---|---|---|---|---|
| Base Critical Headway (sec) | | | | | | | | 7.1 | 5.6 | | | | 5.6 | 5.3 | | |
| Critical Headway (sec) | | | | | | | | 7.14 | 5.64 | | | | 5.64 | 5.34 | | |
| Base Follow-Up Headway (sec) | | | | | | | | 3.9 | 2.3 | | | | 2.3 | 3.1 | | |
| Follow-Up Headway (sec) | | | | | | | | 3.92 | 2.32 | | | | 2.32 | 3.12 | | |

## Delay, Queue Length, and Level of Service

| | | | | | | | | | | | | | | | | |
|---|---|---|---|---|---|---|---|---|---|---|---|---|---|---|---|---|
| Flow Rate, v (veh/h) | | | | | | | | 8 | 32 | | | | | 49 | | |
| Capacity, c (veh/h) | | | | | | | | 259 | 488 | | | | | 249 | | |
| v/c Ratio | | | | | | | | 0.03 | 0.06 | | | | | 0.20 | | |
| 95% Queue Length, $Q_{95}$ (veh) | | | | | | | | 0.1 | 0.2 | | | | | 0.7 | | |
| Control Delay (s/veh) | | | | | | | | 19.3 | 12.9 | | | | | 23.0 | | |
| Level of Service (LOS) | | | | | | | | C | B | | | | | C | | |
| Approach Delay (s/veh) | | | | | | 19.3 | | | | 0.2 | | | | 0.9 | | |
| Approach LOS | | | | | | C | | | | | | | | | | |

Copyright © 2021 University of Florida. All Rights Reserved.

# HCS7 Two-Way Stop-Control Report

## General Information

| | |
|---|---|
| Analyst | JF |
| Agency/Co. | JFO GROUP INC |
| Date Performed | 03/24/2021 |
| Analysis Year | 2022 |
| Time Analyzed | PM |
| Intersection Orientation | North-South |
| Project Description | Five Star Education |

## Site Information

| | |
|---|---|
| Intersection | Military Trl & U-turn |
| Jurisdiction | F-DOT |
| East/West Street | U-Turn |
| North/South Street | Military Trl |
| Peak Hour Factor | 0.95 |
| Analysis Time Period (hrs) | 0.25 |

## Lanes

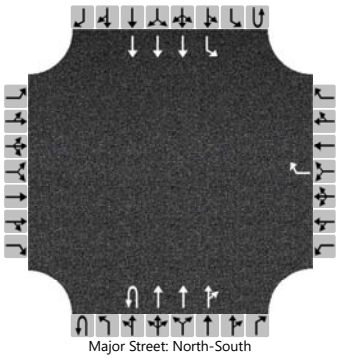
Major Street: North-South

## Vehicle Volumes and Adjustments

| Approach | Eastbound | | | | Westbound | | | | Northbound | | | | Southbound | | | |
|---|---|---|---|---|---|---|---|---|---|---|---|---|---|---|---|---|
| Movement | U | L | T | R | U | L | T | R | U | L | T | R | U | L | T | R |
| Priority | | 10 | 11 | 12 | | 7 | 8 | 9 | 1U | 1 | 2 | 3 | 4U | 4 | 5 | 6 |
| Number of Lanes | | 0 | 0 | 0 | | 0 | 0 | 1 | 1 | 0 | 3 | 0 | 0 | 1 | 3 | 0 |
| Configuration | | | | | | | | R | U | | T | TR | | L | T | |
| Volume (veh/h) | | | | | | | | 10 | 26 | | 1652 | 2 | 22 | 11 | 1719 | |
| Percent Heavy Vehicles (%) | | | | | | | | 2 | 2 | | | | 2 | 2 | | |
| Proportion Time Blocked | | | | | | | | | | | | | | | | |
| Percent Grade (%) | | | | | 0 | | | | | | | | | | | |
| Right Turn Channelized | | | | | No | | | | | | | | | | | |
| Median Type \| Storage | Left Only | | | | | | | | 1 | | | | | | | |

## Critical and Follow-up Headways

| | | | | | | | | | | | | | | | | |
|---|---|---|---|---|---|---|---|---|---|---|---|---|---|---|---|---|
| Base Critical Headway (sec) | | | | | | | | 7.1 | 5.6 | | | | 5.6 | 5.3 | | |
| Critical Headway (sec) | | | | | | | | 7.14 | 5.64 | | | | 5.64 | 5.34 | | |
| Base Follow-Up Headway (sec) | | | | | | | | 3.9 | 2.3 | | | | 2.3 | 3.1 | | |
| Follow-Up Headway (sec) | | | | | | | | 3.92 | 2.32 | | | | 2.32 | 3.12 | | |

## Delay, Queue Length, and Level of Service

| | | | | | | | | | | | | | | | | |
|---|---|---|---|---|---|---|---|---|---|---|---|---|---|---|---|---|
| Flow Rate, v (veh/h) | | | | | | | | 11 | 27 | | | | | 35 | | |
| Capacity, c (veh/h) | | | | | | | | 253 | 291 | | | | | 237 | | |
| v/c Ratio | | | | | | | | 0.04 | 0.09 | | | | | 0.15 | | |
| 95% Queue Length, $Q_{95}$ (veh) | | | | | | | | 0.1 | 0.3 | | | | | 0.5 | | |
| Control Delay (s/veh) | | | | | | | | 19.9 | 18.7 | | | | | 22.8 | | |
| Level of Service (LOS) | | | | | | | | C | C | | | | | C | | |
| Approach Delay (s/veh) | | | | | 19.9 | | | | 0.3 | | | | 0.4 | | | |
| Approach LOS | | | | | C | | | | | | | | | | | |

Copyright © 2021 University of Florida. All Rights Reserved.

KMF Traffic Group, LLC
www.kmftraffic.net
772-221-7971

Manual Traffic Count - All Traffic
Military Trail SB-Uturn south of Cypress
West Palm Beach, FL

File Name : UTURN
Site Code : JO2103
Start Date : 3/23/2021
Page No : 1

Groups Printed- ALL TRAFFIC

| | Military Trail NB | | | Military Trail SB | | | 2450 Driveway WB | | |
|---|---|---|---|---|---|---|---|---|---|
| Start Time | Right | Thru | UTurn | Thru | Left | UTurn | Right | Left | Int. Total |
| 07:00 AM | 0 | 260 | 1 | 251 | 2 | 1 | 3 | 0 | 518 |
| 07:15 AM | 2 | 317 | 5 | 258 | 2 | 0 | 2 | 0 | 586 |
| 07:30 AM | 1 | 432 | 4 | 299 | 5 | 0 | 3 | 0 | 744 |
| 07:45 AM | 0 | 382 | 6 | 309 | 3 | 2 | 1 | 0 | 703 |
| Total | 3 | 1391 | 16 | 1117 | 12 | 3 | 9 | 0 | 2551 |
| | | | | | | | | | |
| 08:00 AM | 1 | 380 | 10 | 260 | 5 | 4 | 2 | 0 | 662 |
| 08:15 AM | 0 | 369 | 10 | 271 | 2 | 4 | 2 | 0 | 658 |
| 08:30 AM | 1 | 292 | 8 | 290 | 0 | 1 | 2 | 0 | 594 |
| 08:45 AM | 1 | 282 | 9 | 267 | 1 | 1 | 1 | 0 | 562 |
| Total | 3 | 1323 | 37 | 1088 | 8 | 10 | 7 | 0 | 2476 |
| | | | | | | | | | |
| *** BREAK *** | | | | | | | | | |
| | | | | | | | | | |
| 04:00 PM | 0 | 378 | 6 | 412 | 6 | 4 | 4 | 0 | 810 |
| 04:15 PM | 1 | 228 | 6 | 376 | 3 | 1 | 2 | 0 | 617 |
| 04:30 PM | 0 | 380 | 4 | 392 | 6 | 4 | 3 | 0 | 789 |
| 04:45 PM | 0 | 363 | 4 | 404 | 0 | 3 | 0 | 0 | 774 |
| Total | 1 | 1349 | 20 | 1584 | 15 | 12 | 9 | 0 | 2990 |
| | | | | | | | | | |
| 05:00 PM | 1 | 364 | 6 | 390 | 4 | 6 | 3 | 0 | 774 |
| 05:15 PM | 0 | 426 | 9 | 433 | 4 | 1 | 4 | 0 | 877 |
| 05:30 PM | 0 | 410 | 7 | 439 | 1 | 4 | 2 | 0 | 863 |
| 05:45 PM | 1 | 400 | 4 | 405 | 2 | 2 | 1 | 0 | 815 |
| Total | 2 | 1600 | 26 | 1667 | 11 | 13 | 10 | 0 | 3329 |
| | | | | | | | | | |
| Grand Total | 9 | 5663 | 99 | 5456 | 46 | 38 | 35 | 0 | 11346 |
| Apprch % | 0.2 | 98.1 | 1.7 | 98.5 | 0.8 | 0.7 | 100 | 0 | |
| Total % | 0.1 | 49.9 | 0.9 | 48.1 | 0.4 | 0.3 | 0.3 | 0 | |

KMF Traffic Group, LLC
www.kmftraffic.net
772-221-7971

Manual Traffic Count - All Traffic
Military Trail SB-Uturn south of Cypress
West Palm Beach, FL

File Name : UTURN
Site Code : JO2103
Start Date : 3/23/2021
Page No : 2

| | Military Trail NB | | | | Military Trail SB | | | | 2450 Driveway WB | | | |
|---|---|---|---|---|---|---|---|---|---|---|---|---|
| Start Time | Right | Thru | UTurn | App. Total | Thru | Left | UTurn | App. Total | Right | Left | App. Total | Int. Total |
| Peak Hour Analysis From 07:00 AM to 08:45 AM - Peak 1 of 1 | | | | | | | | | | | | |
| Peak Hour for Entire Intersection Begins at 07:30 AM | | | | | | | | | | | | |
| 07:30 AM | 1 | 432 | 4 | 437 | 299 | 5 | 0 | 304 | 3 | 0 | 3 | 744 |
| 07:45 AM | 0 | 382 | 6 | 388 | 309 | 3 | 2 | 314 | 1 | 0 | 1 | 703 |
| 08:00 AM | 1 | 380 | 10 | 391 | 260 | 5 | 4 | 269 | 2 | 0 | 2 | 662 |
| 08:15 AM | 0 | 369 | 10 | 379 | 271 | 2 | 4 | 277 | 2 | 0 | 2 | 658 |
| Total Volume | 2 | 1563 | 30 | 1595 | 1139 | 15 | 10 | 1164 | 8 | 0 | 8 | 2767 |
| % App. Total | 0.1 | 98 | 1.9 | | 97.9 | 1.3 | 0.9 | | 100 | 0 | | |
| PHF | .500 | .905 | .750 | .912 | .922 | .750 | .625 | .927 | .667 | .000 | .667 | .930 |

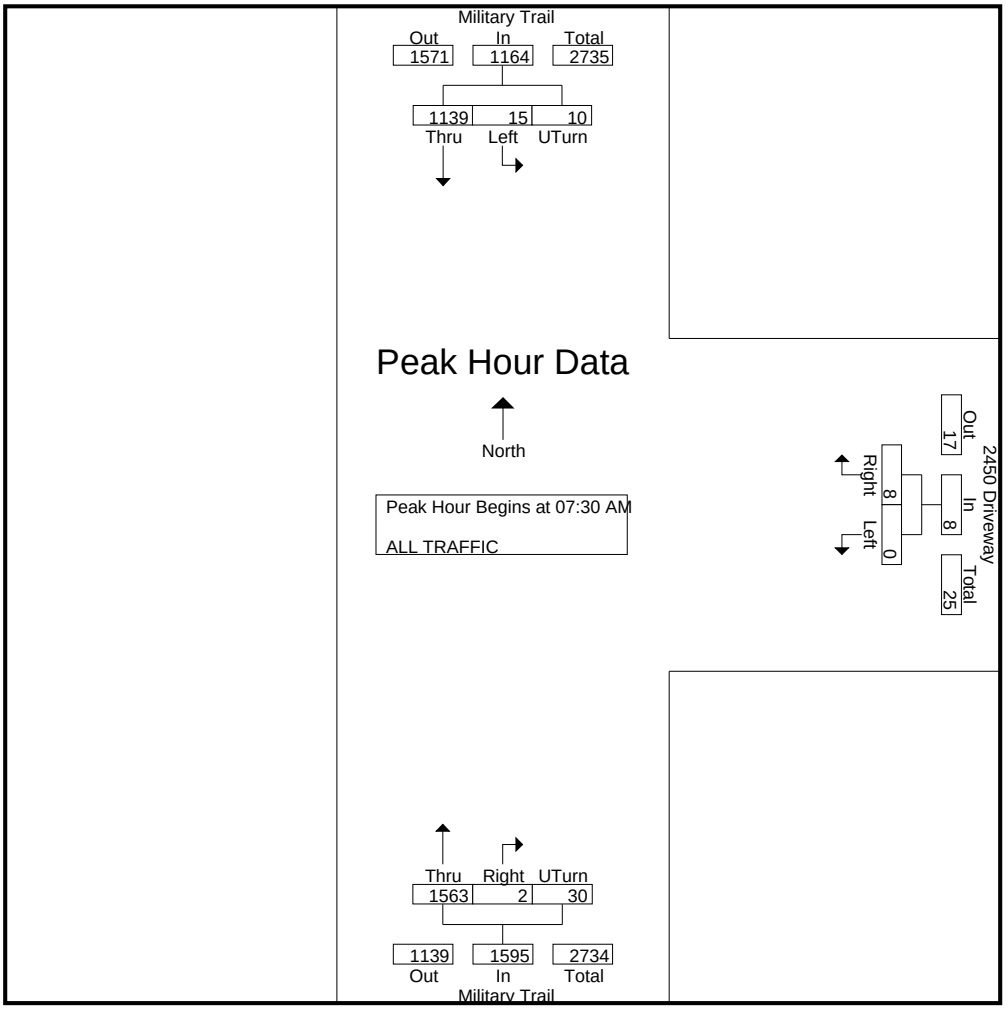

KMF Traffic Group, LLC
www.kmftraffic.net
772-221-7971

Manual Traffic Count - All Traffic
Military Trail SB-Uturn south of Cypress
West Palm Beach, FL

File Name : UTURN
Site Code : JO2103
Start Date : 3/23/2021
Page No : 3

| | Military Trail NB | | | | Military Trail SB | | | | 2450 Driveway WB | | | |
|---|---|---|---|---|---|---|---|---|---|---|---|---|
| Start Time | Right | Thru | UTurn | App. Total | Thru | Left | UTurn | App. Total | Right | Left | App. Total | Int. Total |
| Peak Hour Analysis From 04:00 PM to 05:45 PM - Peak 1 of 1 | | | | | | | | | | | | |
| Peak Hour for Entire Intersection Begins at 05:00 PM | | | | | | | | | | | | |
| 05:00 PM | 1 | 364 | 6 | 371 | 390 | 4 | 6 | 400 | 3 | 0 | 3 | 774 |
| 05:15 PM | 0 | 426 | 9 | 435 | 433 | 4 | 1 | 438 | 4 | 0 | 4 | 877 |
| 05:30 PM | 0 | 410 | 7 | 417 | 439 | 1 | 4 | 444 | 2 | 0 | 2 | 863 |
| 05:45 PM | 1 | 400 | 4 | 405 | 405 | 2 | 2 | 409 | 1 | 0 | 1 | 815 |
| Total Volume | 2 | 1600 | 26 | 1628 | 1667 | 11 | 13 | 1691 | 10 | 0 | 10 | 3329 |
| % App. Total | 0.1 | 98.3 | 1.6 | | 98.6 | 0.7 | 0.8 | | 100 | 0 | | |
| PHF | .500 | .939 | .722 | .936 | .949 | .688 | .542 | .952 | .625 | .000 | .625 | .949 |

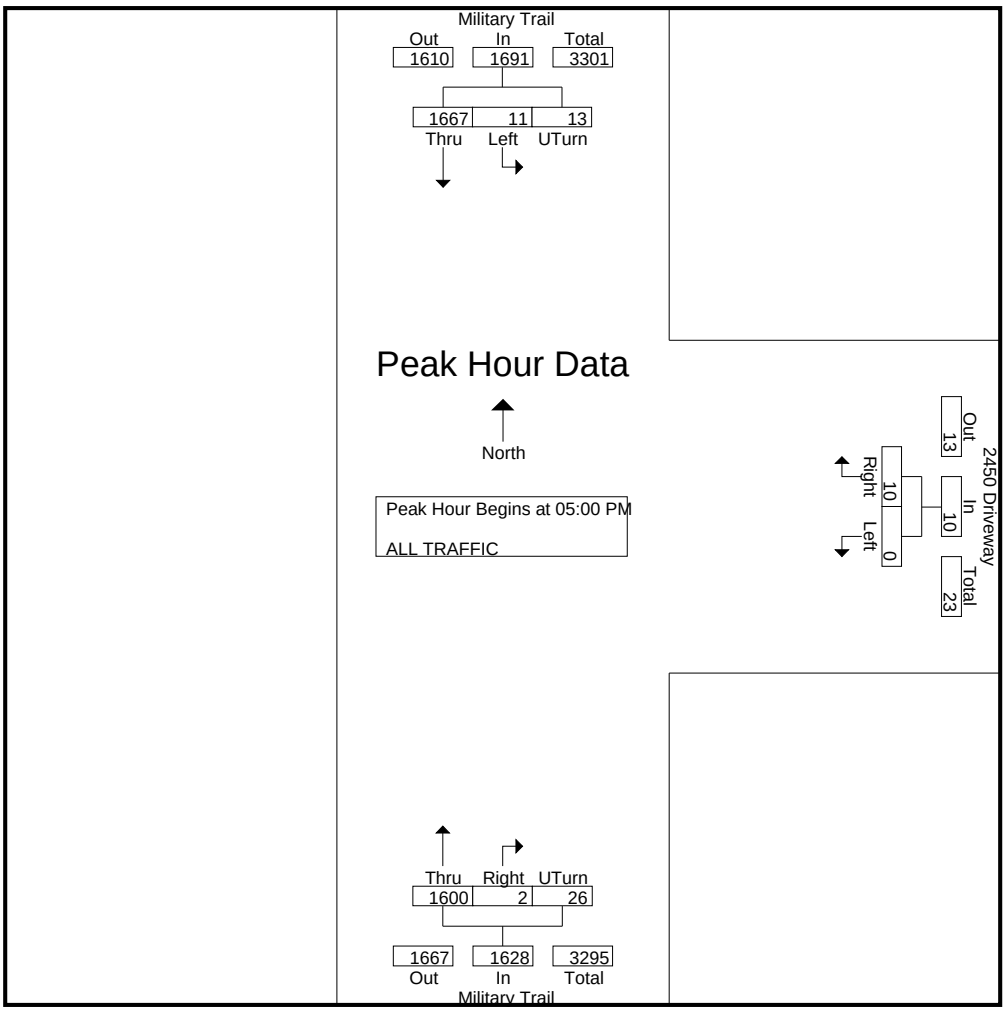

| A | B | C | D | E | F | G | H | I |
|---|---|---|---|---|---|---|---|---|

Input Data

ROAD NAME: S Military Trl
CURRENT YEAR: 2019
ANALYSIS YEAR: 2022
GROWTH RATE: -0.05%
STATION: 4206
FROM: Cresthaven Blvd
TO: Midpoint
COUNT DATE: 3/11/2019
PSF: 1

Report Created
3/20/2021

Link Analysis

| Time Period | AM | | | PM | | |
|---|---|---|---|---|---|---|
| Direction | 2-way | NB/EB | SB/WB | 2-way | NB/EB | SB/WB |
| Existing Volume | 2989 | 1759 | 1230 | 3358 | 1571 | 1793 |
| Peak Volume | 2989 | 1759 | 1230 | 3358 | 1571 | 1793 |
| Diversion(%) | 0 | 0 | 0 | 0 | 0 | 0 |
| Volume after Diversion | 2989 | 1759 | 1230 | 3358 | 1571 | 1793 |

| Committed Developments | | | | | | | Type | % Complete |
|---|---|---|---|---|---|---|---|---|
| Middle School KK | 0 | 0 | 0 | 0 | 0 | 0 | NR | 100% |
| Jaxson Park - Purdy Royale | 0 | 0 | 0 | 1 | 0 | 0 | Res | 0% |
| Abbey Park MUPD | 0 | 0 | 0 | 0 | 0 | 0 | NR | 100% |
| Pine Bay | 2 | 0 | 2 | 3 | 2 | 1 | Res | 0% |
| Walmart-Palm Springs | 2 | 1 | 1 | 8 | 4 | 4 | NR | 75% |
| Central PB Service Center | 0 | 0 | 0 | 0 | 0 | 0 | NR | 100% |
| WAWA - Forest Hill & Congress | 0 | 0 | 0 | 0 | 0 | 0 | NR | 100% |
| WAWA - SEC 10th and Military Trail | 0 | 0 | 0 | 0 | 0 | 0 | NR | 0% |
| Cumberland Farms Store | 90 | 46 | 46 | 85 | 42 | 43 | NR | 0% |
| Canal Shores | 9 | 2 | 8 | 11 | 7 | 4 | Res | 0% |
| Total Committed Developments | 103 | 49 | 57 | 108 | 55 | 52 | | |
| Total Committed Residential | 11 | 2 | 10 | 15 | 9 | 5 | | |
| Total Committed Non-Residential | 92 | 47 | 47 | 93 | 46 | 47 | | |
| Double Count Reduction | 3 | 1 | 3 | 4 | 2 | 1 | | |
| Total Discounted Committed Developments | 100 | 48 | 54 | 104 | 53 | 51 | | |
| Historical Growth | -5 | -3 | -2 | -5 | -3 | -3 | | |
| Comm Dev+1% Growth | 191 | 101 | 91 | 206 | 101 | 105 | | |
| Growth Volume Used | 191 | 101 | 91 | 206 | 101 | 105 | | |
| Total Volume | 3180 | 1860 | 1321 | 3564 | 1672 | 1898 | | |

| Lanes | 6LD | | | | | |
|---|---|---|---|---|---|---|
| LOS D Capacity | 4880 | 2680 | 2680 | 4880 | 2680 | 2680 |
| Link Meets Test 1? | YES | YES | YES | YES | YES | YES |
| LOS E Capacity | 5150 | 2830 | 2830 | 5150 | 2830 | 2830 |
| Link Meets Test 2? | YES | YES | YES | YES | YES | YES |

Input Data

| | | | | | |
|---|---|---|---|---|---|
| ROAD NAME: | S Military Trl | STATION: | 4206 | | Report Created |
| CURRENT YEAR: | 2019 | FROM: | Midpoint | | 3/20/2021 |
| ANALYSIS YEAR: | 2022 | TO: | Purdy Ln | | |
| GROWTH RATE: | -0.05% | COUNT DATE: | 3/11/2019 | | |
| | | PSF: | 1 | | |

Link Analysis

| Time Period | | AM | | | PM | |
|---|---|---|---|---|---|---|
| Direction | 2-way | NB/EB | SB/WB | 2-way | NB/EB | SB/WB |
| Existing Volume | 2989 | 1759 | 1230 | 3358 | 1571 | 1793 |
| Peak Volume | 2989 | 1759 | 1230 | 3358 | 1571 | 1793 |
| Diversion(%) | 0 | 0 | 0 | 0 | 0 | 0 |
| Volume after Diversion | 2989 | 1759 | 1230 | 3358 | 1571 | 1793 |

| Committed Developments | | | | | | | Type | % Complete |
|---|---|---|---|---|---|---|---|---|
| Middle School KK | 0 | 0 | 0 | 0 | 0 | 0 | NR | 100% |
| Jaxson Park - Purdy Royale | 0 | 0 | 0 | 1 | 0 | 0 | Res | 0% |
| Abbey Park MUPD | 0 | 0 | 0 | 0 | 0 | 0 | NR | 100% |
| Pine Bay | 2 | 0 | 2 | 3 | 2 | 1 | Res | 0% |
| Walmart-Palm Springs | 2 | 1 | 1 | 8 | 4 | 4 | NR | 75% |
| Central PB Service Center | 0 | 0 | 0 | 0 | 0 | 0 | NR | 100% |
| WAWA - Forest Hill & Congress | 0 | 0 | 0 | 0 | 0 | 0 | NR | 100% |
| WAWA - SEC 10th and Military Trail | 0 | 0 | 0 | 0 | 0 | 0 | NR | 0% |
| Cumberland Farms Store | 34 | 17 | 17 | 32 | 16 | 16 | NR | 0% |
| Canal Shores | 9 | 2 | 8 | 11 | 7 | 4 | Res | 0% |
| Total Committed Developments | 47 | 20 | 28 | 55 | 29 | 25 | | |
| Total Committed Residential | 11 | 2 | 10 | 15 | 9 | 5 | | |
| Total Committed Non-Residential | 36 | 18 | 18 | 40 | 20 | 20 | | |
| Double Count Reduction | 3 | 1 | 3 | 4 | 2 | 1 | | |
| Total Discounted Committed Developments | 44 | 19 | 25 | 51 | 27 | 24 | | |
| Historical Growth | -5 | -3 | -2 | -5 | -3 | -3 | | |
| Comm Dev+1% Growth | 135 | 72 | 62 | 153 | 75 | 78 | | |
| Growth Volume Used | 135 | 72 | 62 | 153 | 75 | 78 | | |
| Total Volume | 3124 | 1831 | 1292 | 3511 | 1646 | 1871 | | |

| Lanes | 6LD | | | | | |
|---|---|---|---|---|---|---|
| LOS D Capacity | 4880 | 2680 | 2680 | 4880 | 2680 | 2680 |
| Link Meets Test 1? | YES | YES | YES | YES | YES | YES |
| LOS E Capacity | 5150 | 2830 | 2830 | 5150 | 2830 | 2830 |
| Link Meets Test 2? | YES | YES | YES | YES | YES | YES |

# Village of Palm Springs

# Executive Brief

**AGENDA DATE:** May 13, 2021

**DEPARTMENT:** Planning, Zoning & Building

---

**ITEM 9.6:** Resolution No. 2021-11 - Site Development Plan Amendment (SPR21-05) and Special Exception Use (PSSE21-01) - Starbucks - 4380 Forest Hill Boulevard *(Quasi-Judicial Hearing)*

**SUMMARY:**

Mr. Brian Plewinski, agent for the applicant, is requesting a Site Plan Amendment (SPR21-05) and Special Exception (PSSE21-01) approval to allow the conversion of a 3,387 square foot existing restaurant with drive-thru use into a coffee shop with 482 square foot outdoor seating area and drive thru window, located on a 0.26 acre outparcel of the Shoppes of Forest Hill shopping center, which is located at the southeast corner of the intersection of Forest Hill Boulevard and South Military Trail.

Note: The property was annexed into the Village in 2008 as a developed outparcel and currently, the site is developed with a 3,387 gross square feet commercial structure and has been used continuously as a fast-food restaurant with drive thru. The applicant is proposing 2,593 square feet indoor coffee area and 482 square feet outdoor seating area.

A site plan amendment is being requested to enable the applicant to convert the existing Boston Market restaurant into a Starbucks coffee shop, maintaining the drive thru and adding an outdoor seating area. It is proposed to recess the building on its northern elevation by approximately 482 square foot, to create a covered outdoor seating area for customers to enjoy in the shade. The footprint of the building and covered patio generally remains the same as the current restaurant footprint.

The proposed site plan amendment includes creating a longer vehicle stacking lane (by extending a terminal landscape island) and modifying the traffic circulation plan to avoid negative impacts to the roadway system and/or main drive aisles of the shopping center. The proposed improvements include directional signage, enhanced landscaped buffers, re-striping

parking lot, pedestrian connections and exterior improvements to the building.

Additionally, the applicant is requesting a variance relief (PSV21-06) from Section 34-891(1) to allow business operation to commence at 5:30 am rather than 7:00 am required. The request will be considered by the Village Council on May 13th if the site plan and special exception are recommended for approval.

The Planning and Zoning Board considered this application during their April 13, 2021 meeting and recommended approval.

Based on the surrounding characteristics, staff recommends conditional approval of the proposed revised site plan and special exception use.

**FISCAL IMPACT:**

The proposed request is not expected to provide a direct fiscal impact to the Village; however, if approved, would require various Village services that will result in increased expenditures to the Village.

**ATTACHMENTS:**

Proposed Resolution No. 2021-11 - Site Development Plan Amendment (SPR21-05) and Special Exception Use (PSSE21-01) - Starbucks - 4380 Forest Hill Boulevard
Exhibit "A" Staff Report & Conditions of Approvals
Project Narrative and Justification Statement
Site Plan, Landscape Plans, Architectural Plans and Letter
Warranty Deed
Color Site Plan and Color Rendering
Aerial Map and Location Map
Starbucks Observations - March 26, 2021 at Wellington location
Lake Worth Herald Advertisement - April 1, 2021

**RESOLUTION NO. 2021-11**

**A RESOLUTION OF THE VILLAGE COUNCIL OF THE VILLAGE OF PALM SPRINGS, FLORIDA, (APPROVING/DENYING), WITH CONDITIONS, A SITE PLAN AMENDMENT, (SPR21-05), AND SPECIAL EXCEPTION USE (PSSE21-01) TO ALLOW THE CONVERSION OF A 3,387 SQUARE FOOT EXISTING RESTAURANT WITH DRIVE-THRU USE INTO A COFFEE SHOP WITH 482 SQUARE FOOT OUTDOOR SEATING AREA AND DRIVE THRU WINDOW AND HOURS OF OPERATION VARIANCE (PSV21-06) TO ALLOW BUSINESS OPERATIONS TO COMMENCE AT 5:30 A.M. RATHER THAN 7:00 A.M., LOCATED AT THE SOUTHEAST CORNER OF THE INTERSECTION OF FOREST HILL BOULEVARD AND SOUTH MILITARY TRAIL AND PROVIDING FOR AN EFFECTIVE DATE.**

**WHEREAS,** Mr. Brian Plewinski, agent for Starbucks, ("Applicant") is requesting a Site Plan Amendment (SPR21-05) and Special Exception (PSSE21-01) approval to allow the conversion of a 3,387 square foot existing restaurant with drive-thru use into a coffee shop with 482 square foot outdoor seating area and drive thru window, located on a 0.26 acre outparcel of the Shoppes of Forest Hill shopping center, which is located at the southeast corner of the intersection of Forest Hill Boulevard and South Military Trail; and

**WHEREAS**, Applicant is also requesting a variance relief, (PSV21-06) from the requirements of Code Section 34-891(1) to allow business operations to commence at 5:30 a.m. rather than 7:00 a.m.; and

**WHEREAS,** the Planning & Zoning Board considered the Site Plan Amendment (SPR21-05) and Special Exception Use (PSSE21-01) during their April 13, 2021 meeting and in light of the applicable legal criteria set forth in Chapter 34 of the Palm Springs Code and the sworn testimony and other evidence presented at public hearing, and the Board recommended approval of the application subject to staff report conditions; and

**WHEREAS,** the Village Council has heard the request for variance in public session; has considered the presentation and other evidence presented by the Applicant; has received and considered the recommendations of the Village Staff; and has otherwise been fully informed regarding this matter.; and

**NOW THEREFORE, BE IT RESOLVED BY THE VILLAGE COUNCIL OF THE VILLAGE OF PALM SPRINGS, FLORIDA:**

**Section 1.** The Village Council having received and considered the request of Mr. Brian Plewinski, agent for the Applicant", for approval of Site Plan Amendment (SPR21-05), Special Exception Use (PSSE21-01) for the proposed coffee shop with outdoor seating and drive thru, determines as follows

.

_____**Having been otherwise fully apprised of the premises herein, the Village Council hereby adopts the findings of the Board and approves the said application as revised, with the staff report conditions attached hereto as Exhibit "A", and which is incorporated herein by reference**.

**OR**

_____**Having been otherwise fully apprised of the premises herein, the Village Council hereby rejects the Board findings and denies the application for the following reason(s):**

_____
_____
_____

Notwithstanding any exceptions, conditions or other approvals granted herein, the applicant must conform to all other applicable codes, ordinances, and laws whether stated herein or not.

Section 2. The Village Council having received and considered the request by Mr. Brian Plewinski, agent for the Applicant, for approval of one (1) variance (PSV21-06) from Section 34-891(1) to allow business operations to commence at 5:30 a.m. in light of the applicable legal criteria set forth in Chapter 34 of the Palm Springs Code and the sworn testimony and other evidence presented at public hearing, determines as follows:

_____**Having been otherwise fully apprised of the premises herein, the Village Council hereby finds that there is substantial evidence to support same, and hereby APPROVES the request for the above-described variance relief.**

**OR**

_____**Having been otherwise fully apprised of the premises herein, the Village Council hereby DENIES the application for variance relief, finding that the requirements of Chapter 34 have not been met for the following reason(s):**

**Section 3.** This Resolution shall take effect immediately upon adoption.

Council Member _____ offered the foregoing resolution. Council Member_____ seconded the motion, and upon being put to a vote, the vote was as follows:

| | Aye | Nay | Absent |
|---|---|---|---|
| BEV SMITH, MAYOR | □ | □ | □ |
| GARY M. READY, VICE MAYOR | □ | □ | □ |
| DOUG GUNTHER, MAYOR PRO TEM | □ | □ | □ |
| PATTI WALLER, COUNCIL MEMBER | □ | □ | □ |
| JONI BRINKMAN, COUNCIL MEMBER | □ | □ | □ |

The Mayor thereupon declared the Resolution duly passed and adopted this _____ day of _____2021.

VILLAGE OF PALM SPRINGS, FLORIDA

BY:_____
BEV SMITH, MAYOR

ATTEST:

BY:_____
KIMBERLY M. WYNN, VILLAGE CLERK

REVIEWED FOR FORM AND LEGAL SUFFICIENCY

BY:_____
GLENN J. TORCIVIA, VILLAGE ATTORNEY

PLANNING, ZONING & BUILDING STAFF REPORT

SUBJECT: Special Exception Use and Site Plan Amendment with One (1) Variance - Starbucks #66291 – 4380 Forest Hill Boulevard

| Application Summary | | | |
|---|---|---|---|
| Applicant / Petitioner | Starbucks #66291 | Submittal Date | 2/26/2021 |
| Reference Name | Starbucks | Case Number | SPR21-05, PSSE21-01, PSV21-06 |
| | | Parcel Control No | 70-42-44-12-00-000-5680 |
| Location | 4380 Forest Hill Boulevard | Site Area | ±0.26 acres |
| P&Z B Meeting | April13, 2021 | Council Meeting | May 13, 2021 |
| **Requests** | | | |
| Proposed Use(s) | Site Plan Amendment and concurrent request for a Special Exception Use to allow the conversion of the existing restaurant use into a coffee shop with outdoor seating area and maintaining the drive thru. | | |
| Number of Buildings | 1 single structure (3,387 sf)<br>482 square footage of the existing building is going to be converted into an outdoor patio area (11'4" x 42'11") | | |
| Variances | COUNCIL CONSIDERATION:<br>PSV21-06 Requesting a Variance relief from Section 34-891(1) to allow business operation to commence at 5:30 am instead of 7:00 am required. | | |
| **Parking** | | | |
| Code | Required | Provided | Meets Requirement |
| Total Overall Parking | Entire center 1 / 200 s.f. @ 122,042 s.f. = 610 spaces<br>As an outparcel 1/50 s.f. @ 3,387 s.f.= 68 spaces | 631 after improvements | Yes (considering entire plaza with shared parking) |
| **Site Characteristics** | | | |
| Existing Use | Fast Food Restaurant with drive thru | Proposed Use | Coffee shop with outdoor seating and drive thru |
| Existing Zoning | Commercial General (CG) | Existing Future Land Use | Commercial |

| Surrounding Existing Land Use, Future Land Use, and Zoning | | | |
|---|---|---|---|
| Direction | Existing Use | Future Land Use | Zoning District |
| North | Commercial vacant lot | Commercial | Commercial General (CG) |
| South | Residential Multi-Families Residences | Low Density Residential | Residential Multiple-Family (RM) |
| East | Residential Multi-Families Residences | Low Density Residential | Residential Multiple-Family (RM) |
| West | Commercial shopping center | Unknown Unincorporated Palm Beah County | Unknown Unincorporated Palm Beah County |

| Recommendation |
|---|
| Planning, Zoning & Building Staff recommends conditional approval of the conversion of the existing 3,387 sf restaurant use into a coffee shop with outdoor seating area and drive thru, as depicted on the proposed site plan, based on consistency with the Village Comprehensive Plan and compatibility with surrounding uses.<br><br>Staff highly recommends that with the proposed new coffee shop queue shall be stored internally to the site without blocking a roadway system or a major driveway/ drive aisle. |




I. Site History

- Ordinance 2008-24: Annexation

On December 11, 2008, the property was voluntarily annexed into the Village of Palm Springs as a developed parcel and designated with the Land Development as Commercial General zoning district and Commercial Future Land Use designation. Since the property was annexed has been used a fast-food restaurant with drive thru.

II. Comprehensive Plan Consistency

The subject property's Future Land Use designation and Zoning are Commercial and Commercial General (CG), respectively. The proposed use is permitted as special exception use and is generally consistent with goals, objectives and policies of the Village's Comprehensive Plan. With the modifications of the restaurant use the property is proposed to be revitalized and improvement to the exterior of the building will create a beneficial visual impact to the neighborhood.

III. Variances Requested

The applicant is seeking the following variances:

- PSV21-06 Requesting Variance relief from Section 34-891(1) to allow business operations to commence at 5:30 am instead of 7:00 am required.

The applicant's full justification is hereto:

a. *That special condition and circumstances exist which are peculiar to the land, structure, or building involved, and which are not applicable to other lands, structures, or buildings in the same land development district.*

Nearby coffee competitors such as Dunkin Donuts, WAWA, and McDonalds are open 24 hours. Starbucks is only requesting operating hours of 5:30 a.m. to 11:00 p.m.

b. *That the special conditions and circumstances do not result from the actions of the applicant.*

Coffee is primarily consumed in the morning. According to the Bureau of US Labor Statistics, about 29 percent of workers were on the clock at 7 a.m. These early risers often have long commutes. Village of Palm Springs residents want their coffee on the way to work. Starbucks does not determine when workers commute to work.

*c. That granting the variance requested will not confer on the applicant any special privilege that is denied by this chapter to other lands, buildings, or structures in the same land development district.*

Nearby coffee competitors such as Dunkin Donuts, WAWA and McDonalds are open 24 hours. Starbucks is only requesting operating hours of 5:30 a.m. to 11:00 p.m. This request does not confer any special privileges.

*d. That literal interpretation of the provisions of this chapter would deprive the applicant of rights commonly enjoyed by other properties in the same land development district under the terms of this chapter and would work unnecessary and undue hardship on the applicant.*

The literal interpretation of the provisions of this chapter would deprive the applicant of rights commonly enjoyed by other properties. Nearby coffee competitors such as Dunkin Donuts, WAWA, and McDonalds are open 24 hours. Starbucks is only requesting operating hours of 5:30 a.m. to 11:0 p.m.

*e. That the variance granted is the minimum variance that will make possible the reasonable use of the land, building, or structure.*

The variance granted is the minimum variance for reasonable use. Nearby coffee competitors such as Dunkin Donuts, WAWA, and McDonalds are open 24 hours. Starbucks is only requesting operating hours of 5:30 a.m. to 11:00 p.m.

*f. That the granting of the variance will be in harmony with the general intent and purpose of this chapter.*

The granting of the variance will be in harmony with the general intent of the chapter.

*g. That such variance will not be injurious to the area involved or otherwise detrimental to the public welfare.*

The variance will not be injurious to the area involved or otherwise detrimental to the public welfare. The public will enjoy a safe and welcoming Starbucks café experience. Our stores are a neighborhood gathering place for meeting friends and family. Our customers enjoy quality service, an inviting atmosphere, and an exceptional beverage.

*Staff does not object to the applicant's request, based on the applicant intent to provide more alternatives to residents and customers who consumed coffee on their way to work early in the morning. Staff found the variance to be in harmony with the general intent of the Village Code and will no create conflicts from the use or granting of the variance to commence business operation one hour and half (1 ½ hr.) ahead of what is permitted.*

IV. Neighborhood Compatibility

1) The proposed project is located on the south side of Forest Hill Blvd and East of south Military Trail.
2) The project is a modification of the existing restaurant use and is expected to bring more customers daily.
3) The project is located within the shopping center where several different retails, offices and restaurants are occupying the suites.
4) Properties to the east and south are generally residential use.
5) The property is located within the TCEA for S Military Trail corridor therefore, exempt from Traffic Performance Standards of Palm Beach County.
6) FDOT conceptual driveway pre-approval letter is required.
7) The proposed restaurant is permitted as special exception use within the CG zoning district.

V. Regulatory Issues

- The site plan generally conforms to the property development standards of the CG district.
  1) Proposed project plan generally meets required site development regulations.
  2) Variance requested shall be approved by the Village Council.

3) Permits from all applicable permitting agencies, including but not limited to PBC Fire Rescue and Village of Palm Springs are required prior to construction.
4) Proposed use meets the Traffic Performance Standards of Palm Beach County.

VI. Environmental Issues:

There are no environmental (wetlands, floodplains, etc.) issues identified.

VII. Community Outreach/ Notification

- The subject property was posted on March 30, 2021.
- Public Notification letters were mailed to all property owners within 300 feet radius of subject property on March 26, 2021.
- Legal advertisement was published in the paper on April 1, 2021.
- Staff has not received any inquiries or comments as a result of the notices.

VIII. Proposed Development Plan Details

The petitioner's development plans dated received on February 26, 2021 depicts the following:

- An application submitted for a Site Plan Amendment Approval and concurrently Special Exception Use with 1 variance for the continued use of the property as a restaurant with outdoor seating area and drive thru.
    1. Site Plan dated received February 26, 2021 revised and resubmitted on March 25, 2021.
    2. Landscape Plans dated received February 26, 2021.
    3. Architectural plans dated received February 26, 2021.
    4. Preliminary Engineering Plans dated received February 26, 2021.
    5. Justification Statement and proposed use.
    6. Traffic Statement.
    7. Color rendering.
    8. Sign package.
    9. Color Site Plan.

IX Recommendation

The 0.26 acres property is located on south side of Forest Hill Boulevard and east of South Military Trail within Shoppes of Forest Hills shopping center. The site is currently developed with a single building 3,387 square feet Boston Market restaurant with drive thru constructed in 1994. The property was annexed into the Village in 2008 as a developed parcel and has been used as a fast-food restaurant with drive thru as of today.

The applicant is requesting a site plan amendment and special exception use with one variance to convert the existing restaurant use into a coffee shop maintaining the drive thru and adding an outdoor seating area. It is proposed to recess the storefront on the northern elevation by approximately 482 square foot, to create an outdoor seating area, under roof, for customers to enjoy in the shade. The footprint of the building remains the same.

The proposed site plan includes creating longer stacking, modification to the traffic circulation plan to avoid negative impact into the roadway system and/or main drive aisles, extending a landscape island to lengthen the stacking lane, significant directional signage, enhancement to the landscaped buffers, stripping parking lot, paving, pedestrian connections, and exterior improvements to the building.

Project proposed the following additional changes:

| | Boston Market | Starbucks |
|---|---|---|
| Chairs | 60 | 17 outside + 47 inside = 64 |
| Signs | North elevation – 63 sq.ft. | 27.6 sq.ft. |

| | | |
|---|---|---|
| | East elevation – 42 sq.ft.<br>West elevation – 42 sq.ft.<br>Pole sign (approximately) – 96 sq.ft. | 26.84 sq.ft.<br>34.8 sq.ft.<br>(approximately) 64 sq.ft. |

As part of the review process, Staff made a site visit to the Starbucks located on Wellington to observe existing characteristic of the drive-up window queue and got the results found on the table below:

| Time (am) | Cars in queue (average) | Wait time upon entering queue until receive order (minutes) |
|---|---|---|
| 6:36 – 6:47 | 11 | 7 |
| 6:54 -7:00 | 11 | 8 |
| 7:05 – 7:19 | 15 | 13 |
| 7:37- 7:48 | 12 | 8 |
| 7:51 – 7:56 | 12 | 9 |
| 7:59 – 8:14 | 14 | 8 |
| 8:17 – 8:24 | 14 | 8 |
| Average = 10-11 cars in queue<br>Average customers wait time upon entering queue until receive order = 9 minutes<br>Most vehicles observed = 18 cars<br>When queue (13-14 cars) stacked to drive aisle, customers made decision to wait in line or park and go into store | | |

Staff has found the proposed Special Exception use to be generally consistent with goals, objectives and policies of the Village's Comprehensive Plan. The proposed use is generally consistent with the Land Development and zoning regulations and all other portions of the code. The proposed special exception use does not significantly reduce light and air to adjacent properties and would not be deterrent to surrounding properties. The new project does not negatively impact natural systems.

Planning, Zoning and Building Staff recommends conditional approval of the two Special Exception Uses and Site Plan Amendment subject to the following thirty (30) conditions below:

1. Build out date is December 31, 2021.
2. The special exception approval for the new coffee shop shall be implemented within 18 months of Council approval.
3. The site plan approval is valid within 24 months of Council approval.
4. FDOT pre-approval letter shall be provided at time of permitting for access connections.
5. If/when drive-thru vehicles extends beyond the conflict point, as shown on sheet C-1A dated signed on 3-24-2021, an employee shall be stationed at the drive-thru line to take orders and prevent traffic from overflowing on the northern part of the drive aisles.
6. Drive-thru signs along each of the driveway entrances indicating the flow of traffic for the drive-thru window shall be provided.
7. Tables and chairs shall be removed each night from the outside patio area and secured within the restaurant.
8. The wi-fi and all outside electrical outlets shall be turned off each night to prevent unwanted guests from loitering in the area.
9. Palm Beach County "Digital Inclusion infrastructure" (broadband antenna and related facilities) shall be accommodated on the property (if location is determined to be desirable for broadband coverage by Palm Beach County or School District of Palm Beach County), prior to Certificate of Completion, and property owner shall voluntarily serve as a program partner (easement/agreement, electric) through the life of the program.
10. No loitering on the grounds will be permitted.
11. No electronically changeable menu board is permitted.
12. Utility easements shall not overlap more than 5' any landscape buffers.
13. A Utility/Civil plan shall be approved by the Village's Engineer and Public Service Department at time of permitting.
14. Permits must be obtained from the Village and Palm Beach County Fire Department at time of permitting.
15. The construction dumpster shall be only provided by Waste Pro USA who is under franchise Agreement with the Village.
16. Landscaped areas shall be irrigated including but not limited to buffer, islands, planter boxes, etc.

17. Irrigation plans shall be provided at the time of permitting. Non-potable water shall be used for the irrigation system per Village code.
18. Provide permits from all applicable permitting agencies, including but not limited to PBC Fire Rescue and Village of Palm Springs at the time of permitting.
19. The property owner shall register an Agent of Record, prior to issuance of a permit, to establish a contact person responsible for compliance with this Development Order, including site plan/landscape plan details and conditions of approval.
20. The Applicant may be required to undertake additional security measures, based on the number of complaints or calls for service for incidents at the premises, as determined by the Police Chief. Such additional security measures, as approved by the Police Chief, may include increased on-site security at the operator's sole expense.
21. All electric utilities shall be underground.
22. A silt barrier shall be installed around the perimeter of the property (within the affected area for the site improvements and new building construction) prior to commencement of any site work or construction activity, and a track pad shall be installed at the construction entrance(s), both of which shall remain through substantial completion.
23. Any sidewalk broken or damaged during construction shall be replaced by the contractor prior to CC.
24. The Landscaping shall be certified by the Landscape Architect upon completion and prior to Certificate of Occupancy/Certificate of Completion of each improvement area.
25. Absolutely no occupancy, other than construction personnel, is permitted prior to TCC/CC.
26. The civil engineer of record shall certify the site construction prior to Certificate of Occupancy.
27. The applicant may be required to provide a resident inspector for structural elements such as concrete pours in accordance with Section 109.1.3 FBC 2010 and F.S. 553.791. Determination shall be made at time of pre-construction conference with Planning Zoning and Building Director.
28. The General Contractor shall be on site during any and all construction activity in accordance with FS 489.1195.
29. The project shall receive approval from all Authorities Having Jurisdiction and submit copies of approvals to the Village of Palm Springs.
30. At the time of CC, the petitioner shall provide the Planning, Zoning and Building Department with electronic copies of as-builts.

**SECTION 4 - DESCRIPTION OF PROJECT** (attach additional pages if necessary)
Including compliance with zoning standards and supplemental regulations

Starbucks proposes to convert the existing Boston Market with Drive Thru located at 4380 Forest Hill Blvd into a Starbucks Coffee Shop with Drive Thru & Outdoor Seating.

This scope includes recessing the the storefront on the northern elevation to create an outdoor seating area, under roof, for Starbucks customers to enjoy in the shade. Please see attached floorplan and elevations. The footprint of the building remains the same: 3357 SF.

A number of Site Improvements are proposed, in order to accommodate Staff's and property owner's concerns regarding a potential increase in drive thru stacking. These site improvements include creating a longer stacking area. These site improvements are shown on attached page C-1A Traffic Circulation Plan and include extending a landscape island to lengthen the stacking lane, significant directional signage, way finding signs, directional pavement markings, designating employee parking spaces, "Do Not Enter"signs, and designated parking spaces fronting Forest Hill, away from the drive thru, for "Order Pick Up" parking only.

Please see attached Traffic Engineer Reponse to via planning, inc comment letter dated 2/1/2021 for further details regarding how Starbucks is addressing any remaining Village of Palm Springs queueing and traffic concerns.

Starbucks is also seeking variance approval for proposed Hours of Operation. Proposed and Typical Hours of Operation for Starbucks are 5:30am to 11:00pm. The basis for this variance for Hours of Operation request is attached separately to this application.

Per Police request during pre-application meeting, outdoor furniture will be secured at night, or brought inside the space. Exterior Lighting will be sufficient to provide safety at rear door and throughout the site. Rear Door will have a viewer, per Starbucks' security standards.

Signage package is included in this submittal. Wall Signage area is less than previously approved Boston Market wall signage. Re-use of existing monument sign is included in sign package.

**SECTION 8 – VARIANCE ONLY**
**(Hours of Operation)**
Related Applications
Code Section: Sec. 34-891
Required: (1) No commercial use shall commence business activities prior to 7:00 a.m., nor continue such activities later than 11:00 p.m.
Request: Operating Hours of 5:30 a.m. to 11:00 p.m.

Details of Variance Request or Appeal:

Starbucks primary business is selling coffee. Coffee is primarily consumed in the morning. According to the Bureau of US Labor Statistics, about 29 percent of workers were on the clock at 7 a.m. These Early Risers often have long commutes. Village of Palm Springs residents want their coffee on the way to work. Nearby coffee competitors such as Dunkin Donuts, WAWA, and McDonalds are open 24 hours.

Chapter 34, Section 34-603 of the Code of Ordinances, Village of Palm Springs, requires a statement of special reasons or basis for the variance request. This statement should be predicated on the objectives presented in Section 34-603(f)(1) of the Code. The statement must include comments on each of the following individually:

a. That special condition and circumstances exist which are peculiar to the land, structure, or building involved, and which are not applicable to other lands, structures, or buildings in the same land development district.

Nearby coffee competitors such as Dunkin Donuts, WAWA, and McDonalds are open 24 hours. Starbucks is only requesting Operating Hours of 5:30 a.m. to 11:00 p.m.

b. That the special conditions and circumstances do not result from the actions of the applicant.

Coffee is primarily consumed in the morning. According to the Bureau of US Labor Statistics, about 29 percent of workers were on the clock at 7 a.m. These Early Risers often have long commutes. Village of Palm Springs residents want their coffee on the way to work. Starbucks does not determine when workers commute to work.

c. That granting the variance requested will not confer on the applicant any special privilege that is denied by this chapter to other lands, buildings, or structures in the same land development district.

Nearby coffee competitors such as Dunkin Donuts, WAWA, and McDonalds are open 24 hours. Starbucks is only requesting Operating Hours of 5:30 a.m. to 11:00 p.m. This request does not confer any special privileges.

d. That literal interpretation of the provisions of this chapter would deprive the applicant of rights commonly enjoyed by other properties in the same land

development district under the terms of this chapter and would work unnecessary and undue hardship on the applicant.

The literal interpretation of the provisions of this chapter would deprive the applicant of rights commonly enjoyed by other properties. Nearby coffee competitors such as Dunkin Donuts, WAWA, and McDonalds are open 24 hours. Starbucks is only requesting Operating Hours of 5:30 a.m. to 11:00 p.m.

e. That the variance granted is the minimum variance that will make possible the reasonable use of the land, building, or structure.

The variance granted is the minimum variance for reasonable use. Nearby coffee competitors such as Dunkin Donuts, WAWA, and McDonalds are open 24 hours. Starbucks is only requesting Operating Hours of 5:30 a.m. to 11:00 p.m.

f. That the granting of the variance will be in harmony with the general intent and purpose of this chapter.

The granting of the variance will be in harmony with the general intent of the chapter.

g. That such variance will not be injurious to the area involved or otherwise detrimental to the public welfare.

The variance will not be injurious to the area involved or otherwise detrimental to the public welfare. The public will enjoy a safe and welcoming Starbucks Café experience.
Our stores are a neighborhood gathering place for meeting friends and family. Our customers enjoy quality service, an inviting atmosphere and an exceptional beverage.

# SITE PLAN

**Sunshine811**

Call 811 or visit sunshine811.com two full business days before digging to have buried facilities located and marked.

*Check positive response codes before you dig!*

## CONSTRUCTION NOTES:

ANY DAMAGE TO SIDEWALK, RAMPS, AND/OR CURB AND GUTTER SHALL BE RESTORED PER FDOT 2017-18 DESIGN STANDARDS INDEX No. 300, 304 AND 310.

## UTILITY NOTE:

WE HAVE CONTACTED BOTH THE VILLAGE OF PAM SPRINGS AND AND ALSO PALM BEACH COUNTY. NEITHER HAD ANY UTILITY INFORMATION WITHIN THE SHOPPING CENTER.

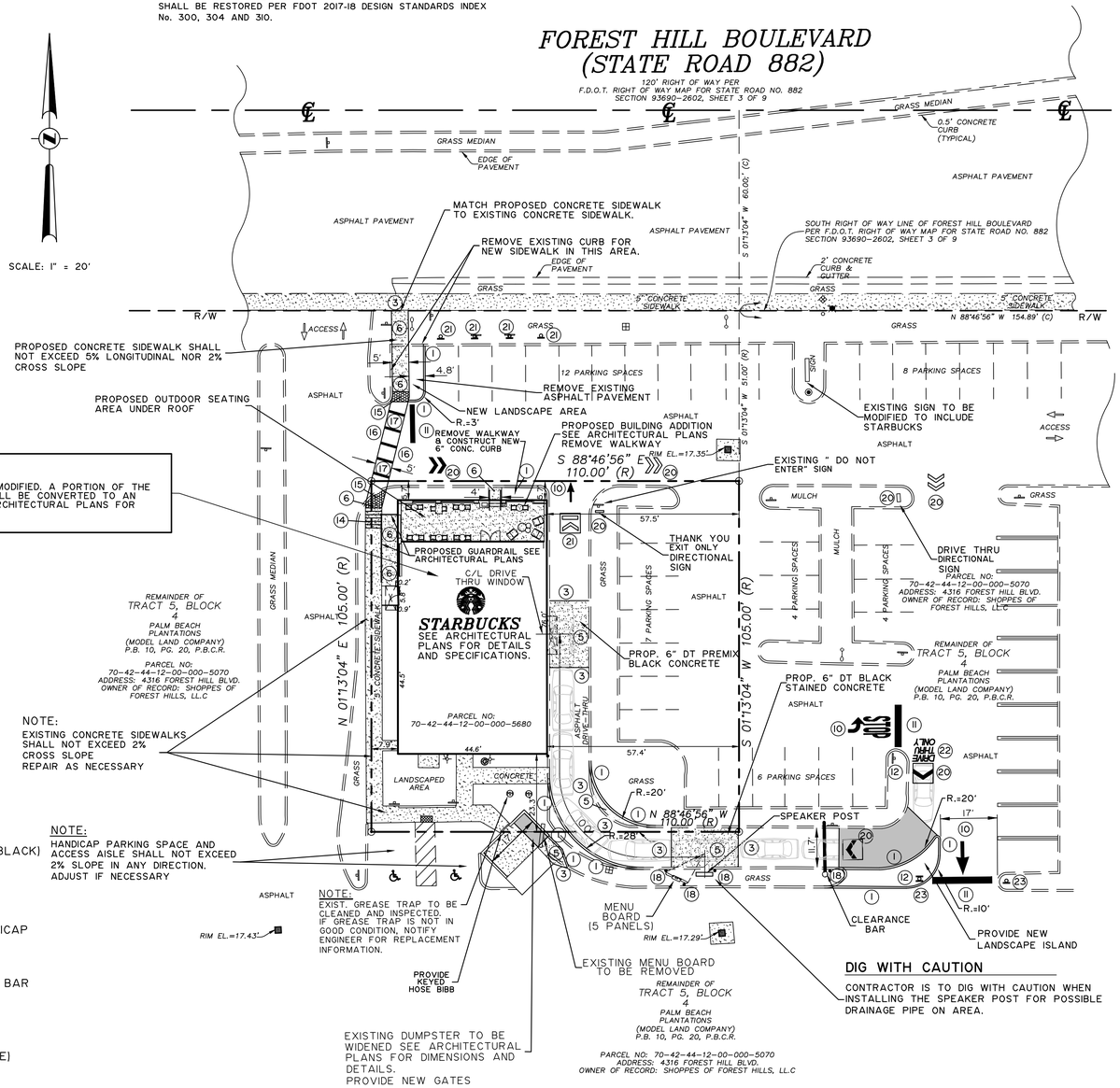


## LEGEND

- EXISTING PAVEMENT
- PROPOSED PAVEMENT
- 9.50 EXISTING ELEVATION
- 10.9 PROPOSED ELEVATION
- PROPOSED CONCRETE
- PROPOSED ASPHALT PAVEMENT
- RUN OFF DIRECTION
- EXIST. TYPE "F" CURB & GUTTER
- PROP. TYPE "F" CURB & GUTTER
- (I) DRAINAGE STRUCTURE NUMBER

## NOTE:

EXISTING BUILDING TO BE MODIFIED. A PORTION OF THE BUILDING IN THE FRONT WILL BE CONVERTED TO AN OUTDOOR SEATING. SEE ARCHITECTURAL PLANS FOR DIMENSIONS AND DETAILS.

## SCHEDULE NOTES

1. NEW 6" TYPE "D" CONCRETE CURB
2. NEW WHEEL STOP/BUMPER
3. EXISTING PAVEMENT LINE
4. NEW ASPHALT PAVEMENT
5. NEW CONCRETE PAVEMENT (PREMIX BLACK)
6. NEW CONCRETE SIDEWALK (6" THICK)
7. NEW 4" PAINTED STRIPING (DOUBLE)
8. NEW 4" PAINTED WHITE STRIPING
9. NEW TYPICAL PAINTED "WHITE" HANDICAP SYMBOL
10. NEW PAINTED DIRECTIONAL ARROW
11. NEW 24" WIDE PAINTED WHITE STOP BAR
12. NEW STOP SIGN (R1-1)
13. NEW TYPICAL "HANDICAP" SIGN SEE SHEET C-2
14. NEW HANDICAP RAMP (1:12 MAX SLOPE)
15. NEW 3' DETECTABLE WARNING
16. NEW 6" WHITE STRIPING
17. NEW 12" WHITE STRIPING 6' O.C.
18. NEW CONCRETE BOLLARD
19. NEW STARBUCKS DIRECTIONAL SIGN
20. NEW STARBUCKS TRAFFIC ARROW
21. NEW STARBUCKS PARKING "PICK UP" SIGN
22. NEW DRIVE THRU LETTERING
23. NEW "DO NOT ENTER" SIGN

## NOTE TO CONTRACTOR:

CONTRACTOR TO VERIFY THAT ALL EXISTING HANDICAP SPACES AND ACCESS AISLE DO NOT EXCEED 2% SLOPE IN ANY DIRECTION AND VERIFY ENGINEER IF SLOPES EXCEEDS 2%.

CONTRACTOR TO VERIFY ALL EXISTING SIDEWALK TO REMAIN DO NOT EXCEED 2% CROSS SLOPE NOR 5% LONGITUDINAL SLOPE AND VERIFY ENGINEER IF SLOPES EXCEEDS 2%.

CONTRACTOR TO TAKE ALL PRECAUTIONS DURING CONSTRUCTION TO INSURE THAT NO DEBRIS ENTERS THE DRAINAGE SYSTEM.

AFTER ALL CONSTRUCTION IS COMPLETED CONTRACTOR TO VACUUM CLEAN THE EXISTING DRAINAGE SYSTEM AND MANHOLES.

## POLICE DEPARTMENT NOTE:

IF DRIVE THRU VEHICLES EXTEND BEYOND THE CONFLICT POINT, AN EMPLOYEE SHALL BE STATIONED AT THE DRIVE THRU LINE TO TAKE ORDERS AND TO PREVENT TRAFFIC FROM OVERFLOWING ON THE NORTHERN PART OF THE DRIVE AISLES.

TABLES / CHAIRS SHALL BE REMOVED EACH NIGHT FROM THE OUTSIDE PATIO AREA AND SECURED WITHIN THE RESTAURANT.

THE WI-FI AND ALL OUTSIDE ELECTRICAL OUTLETS SHALL BE TURNED OFF EACH NIGHT TO PREVENT UNWANTED GUESTS FROM LOITERING IN THE AREA.

## DIG WITH CAUTION

CONTRACTOR IS TO DIG WITH CAUTION WHEN INSTALLING THE SPEAKER POST FOR POSSIBLE DRAINAGE PIPE ON AREA.

## SITE DATA:

ZONING: CG

LAND USE: COMMERCIAL GENERAL

| LOT AREA: | PROPOSED |
|---|---|
| Total Land Area | 11,550 SQ.FT = 0.265 Ac = 100% |
| Building Area | 3,387 SQ.FT. = 0.077 Ac. = 29.3% |
| Sidewalk | 795 SQ.FT. = 0.018 Ac. = 6.9% |
| Paved Area | 5,137 SQ.FT. = 0.118 Ac. = 44.5% |
| Landscape Area | 2,231 SQ.FT. = 0.051 Ac. = 19.3% |

The following impervious / peervious area include the Starbucks parcel and the projection to the south cross drive aisle and Forest hill right of way line.

| | PRE-DEVELOPMENT | POST DEVELOPMENT |
|---|---|---|
| PERVIOUS AREA | 3,832 SQ. FT. | 4,014 SQ. FT. |
| IMPERVIOUS AREA | 15,653 SQ. FT. | 15,516 SQ. FT. |

PARKING SPACES:

Total Existing Parking Spaced Provided within center 632

Total Existing Parking Spaced Provided after Starbucks improvements 631

The 1 parking space lost was to provide an ADA pedestrian path from the remodeled Building to the public sidewalk along Forest Hill Boulevard as per ADA standards.

Total shopping center Building area is 122,042 square feet

Total Required Parking Spaces 5 spaces per 1000 square feet
122,042 sq. ft. × 5 / 1,000 = 610 spaces required

Total Proposed Parking Spaces 631

Total Proposed Parking Spaces 5.17 spaces per 1000 square feet

| BUILDING SETBACKS: | REQUIRED | EXISTING |
|---|---|---|
| Front (Forest Hill Blvd.) | 50 FT. | 56.7 FT. |
| Rear | 0 FT. | 23.3 FT. |
| Side Interior (East) | 0 FT. | 57.4 FT. |
| Side Interior (West) | 0 FT. | 7.9 FT. |

## LEGAL DESCRIPTION:

A PARCEL OF LAND LYING IN TRACT 5, BLOCK 4, SECTION 12, TOWNSHIP 44 SOUTH RANGE 42 EAST, PLAT No. 1, PALM BEACH PLANTATIONS, ACCORDING TO THE PLAT THEREOF, AS RECORDED IN PLAT BOOK 10, PAGE 20, PUBLIC RECORDS, PALM BEACH COUNTY, FLORIDA; SAID PARCEL OF LAND MORE PARTICULARLY DESCRIBED AS FOLLOWS;
COMMENCING AT THE NORTHEAST CORNER OF SAID TRACT 5, THENCE, SOUTH 01°29'44" EAST, ALONG THE EAST LINE OF SAID TRACT 5, A DISTANCE OF 60.07 FEET TO THE INTERSECTION THEREOF WITH THE SOUTH RIGHT OF WAY LINE OF FOREST HILL BLVD. THENCE NORTH 88°46'56" WEST, ALONG SAID SOUTH RIGHT OF WAY LINE AND ALONG A LINE 60 FEET SOUTH OF, AS MEASURED AT RIGHT ANGLES TO THE NORTH LINE OF SAID TRACT 5, A DISTANCE OF 755.00 FEET; THENCE SOUTH 01°13'04" WEST, A DISTANCE OF 51.00 FEET TO THE POINT OF BEGINNING (P.O.B.).
THENCE CONTINUE SOUTH 01°13'04" WEST, A DISTANCE OF 105.00 FEET; THENCE, NORTH 88°46'56" WEST, A DISTANCE OF 110.00 FEET; THENCE NORTH 01°13'04" EAST, A DISTANCE OF 105.00 FEET; THENCE SOUTH 88°46'56" EAST, A DISTANCE OF 110.00 FEET TO THE POINT OF BEGINNING (P.O.B.).

## NOTES:

1. BACKGROUND INFORMATION OBTAINED FROM BOUNDARY & TOPOGRAPHIC SURVEY ECS PROFESSIONAL LAND SURVEYORS DATED DECEMBER 9, 2020
2. ELEVATIONS ARE BASED UPON N.A.V. 88 (1988) DATUM AND AS SHOWN ON THE SURVEY.
3. UNDERGROUND UTILITY INFORMATION IS TAKEN FROM THE BEST AVAILABLE SOURVES BUT SHOULD BE VERIFIED BY THE CONTRACTOR IN THE FIELD WITH THE APPROPRIATE UTILITY AGENCY PRIOR TO COMMENCEMENT OF ANY WORK.
   EXISTING UTILITY LINES OTHER THAN THOSE INDICATED IN THIS DRAWING MAY BE ON THE SITE THE CONTRACTOR IS WARNED TO PROCEED WITH CAUTION WITH ALL WORK. HE IS TO MAKE ALL POSSIBLE INVESTIGATION AS TO POSSIBLE UNMARKED UTILITY LINES.
4. ANY APPARENT DISCREPANCIES IN THE PLANS AND FIELD CONDITIONS SHALL BE BROUGHT TO THE ATTENTION OF THE ENGINEER BEFORE PROCEEDING WITH THE WORK.
5. THE CONTRACTOR SHALL RESTORE ALL AREAS DISTURBED BY THIS CONSTRUCTION TO A CONDITION EQUAL TO, OR BETTER THAN, THAT NOW EXISTING.
6. CONTRACTOR SHALL ADJUST ANY UTILTY LIDS AND/OR COVERS IN PROJECT AREA TO THE FINISHED GRADE.
7. ALL CONSTRUCTION SHALL COMPLY WITH THE LATEST BUILDING CODE IN AFFECT.
8. THIS PROPERTY FOLIO NUMBER IS 70-42-44-12-00-000-5680
9. THIS PROJECT SHALL COMPLY WITH CURRENT VILLAGE OF PALM SPRINGS PUBLIC WORKS DEPARTMENT PALM BEACH COUNTY FIRE, MUTCD AND FLORIDA DEPARTMENT OF TRANSPORTATION STANDARDS.
10. THIS PROPERTY LIES IN SECTION 12, TOWNSHIP 44 SOUTH, RANGE 42 EAST.

2. 4/6/2021 BUILDING SQUARE FOOTAGE
1. 3/22/2021 SITE PLAN REVIEW COMMENTS

PROJECT No. 2020-69 DATE: 12/10/2020


**ZAMORA & ASSOCIATES, INC.**
ENGINEERING LAND PLANNING
11410 N. KENDALL DRIVE SUITE 302 MIAMI, FLORIDA 33176
(305) 273-7801 FAX (305) 273-9514



©2011 STARBUCKS COFFEE COMPANY



STARBUCKS COFFEE COMPANY
2401 UTAH AVENUE SOUTH
SEATTLE, WASHINGTON 98134
(206) 318-1575



THESE DRAWINGS AND SPECIFICATIONS ARE CONFIDENTIAL AND SHALL REMAIN THE SOLE PROPERTY OF STARBUCKS CORPORATION, WHICH IS THE OWNER OF THE COPYRIGHT IN THIS WORK. THEY SHALL NOT BE REPRODUCED (IN WHOLE OR IN PART), SHARED WITH THIRD PARTIES OR USED IN ANY MANNER ON OTHER PROJECTS OR EXTENSIONS TO THIS PROJECT WITHOUT THE PRIOR WRITTEN CONSENT OF STARBUCKS CORPORATION. THESE DRAWINGS AND SPECIFICATIONS ARE INTENDED TO EXPRESS DESIGN INTENT FOR A PROTOTYPICAL STARBUCKS STORE (WHICH IS SUBJECT TO CHANGE AT ANYTIME) AND DO NOT REFLECT ACTUAL SITE CONDITIONS. NEITHER PARTY SHALL HAVE ANY OBLIGATION NOR LIABILITY TO THE OTHER (EXCEPT STATED ABOVE) UNTIL A WRITTEN AGREEMENT IS FULLY EXECUTED BY BOTH PARTIES.


PROJECT NAME: STARBUCKS

PROJECT ADDRESS: 4380 Forest Hill Boulevard
Village of Palm Springs, Florida

SEAL / SIGNATURE

GERARDO ZAMORA P.E.
CIVIL ENGINEER
P.E. No. 44207
E.B. 0006791
STATE OF FLORIDA

GERARDO ZAMORA LICENSE No. 44207 STATE OF FLORIDA PROFESSIONAL ENGINEER

4/6/2021

THIS ITEM HAS BEEN DIGITALLY SIGNED AND SEALED BY GERARDO ZAMORA JR P.E. ON THE DATE ADJACENT TO THE SEAL. PRINTED COPIES OF THIS DOCUMENT ARE NOT CONSIDERED SIGNED & SEALED AND THE SIGNATURE MUST BE VERIFIED ON ANY ELECTRONIC COPIES.

STORE #:

PROJECT #:

CONCEPT:

ISSUE DATE: *12/10/2020*

DESIGN MANAGER:

LEED AP:

PRODUCTION DESIGNER:

CHECKED BY:

SHEET TITLE: *SITE PLAN*

SCALE: *1 = 20'*

SHEET NUMBER: **C-1**

# TRAFFIC CIRCULATION PLAN

**Sunshine811**

Call 811 or visit sunshine811.com two full business days before digging to have buried facilities located and marked.

*Check positive response codes before you dig!*

**POLICE DEPARTMENT NOTE:**

IF DRIVE THRU VEHICLES EXTEND BEYOND THE CONFLICT POINT, AN EMPLOYEE SHALL BE STATIONED AT THE DRIVE THRU LINE TO TAKE ORDERS AND TO PREVENT TRAFFIC FROM OVERFLOWING ON THE NORTHERN PART OF THE DRIVE AISLES.

TABLES / CHAIRS SHALL BE REMOVED EACH NIGHT FROM THE OUTSIDE PATIO AREA AND SECURED WITHIN THE RESTAURANT.

THE WI-FI AND ALL OUTSIDE ELECTRICAL OUTLETS SHALL BE TURNED OFF EACH NIGHT TO PREVENT UNWANTED GUESTS FROM LOITERING IN THE AREA.

SCALE: 1" = 20'

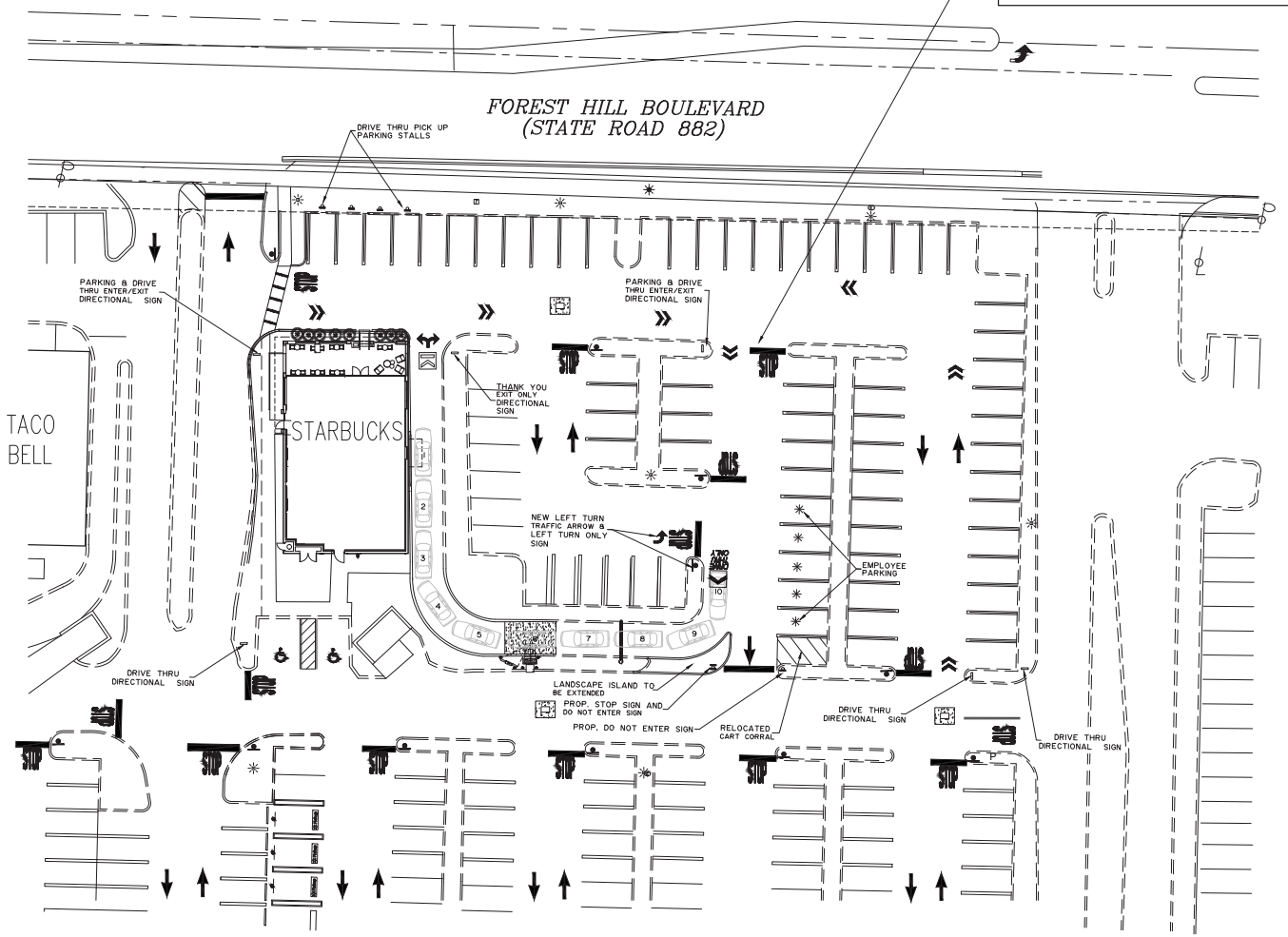


**LEGEND**

- EXISTING PAVEMENT
- PROPOSED PAVEMENT
- 98.0 EXISTING ELEVATION
- 10.9 PROPOSED ELEVATION
- PROPOSED CONCRETE
- PROPOSED ASPHALT PAVEMENT
- RUN OFF DIRECTION
- EXIST. TYPE "F" CURB & GUTTER
- PROP. TYPE "F" CURB & GUTTER
- ① DRAINAGE STRUCTURE NUMBER

Gerardo Zamora — Digitally signed by Gerardo Zamora Date: 2021.03.24 11:54:42 -04'00'

1. 3/24/2021 SITE PLAN REVIEW COMMENTS

PROJECT No. 2020-69 DATE: 12/10/2020


**ZAMORA & ASSOCIATES, INC.**
ENGINEERING LAND PLANNING
11410 N. KENDALL DRIVE SUITE 302 MIAMI, FLORIDA 33176
(305) 273-7801 FAX (305) 273-9514



©2011 STARBUCKS COFFEE COMPANY



STARBUCKS COFFEE COMPANY
2401 UTAH AVENUE SOUTH
SEATTLE, WASHINGTON 98134
(206) 318-1575



THESE DRAWINGS AND SPECIFICATIONS ARE CONFIDENTIAL AND SHALL REMAIN THE SOLE PROPERTY OF STARBUCKS CORPORATION, WHICH IS THE OWNER OF THE COPYRIGHT IN THIS WORK. THEY SHALL NOT BE REPRODUCED (IN WHOLE OR IN PART), SHARED WITH THIRD PARTIES OR USED IN ANY MANNER ON OTHER PROJECTS OR EXTENSIONS TO THIS PROJECT WITHOUT THE PRIOR WRITTEN CONSENT OF STARBUCKS CORPORATION. THESE DRAWINGS AND SPECIFICATIONS ARE INTENDED TO EXPRESS DESIGN INTENT FOR A PROTOTYPICAL STARBUCKS STORE (WHICH IS SUBJECT TO CHANGE AT ANYTIME) AND DO NOT REFLECT ACTUAL SITE CONDITIONS. NEITHER PARTY SHALL HAVE ANY OBLIGATION NOR LIABILITY TO THE OTHER (EXCEPT STATED ABOVE) UNTIL A WRITTEN AGREEMENT IS FULLY EXECUTED BY BOTH PARTIES.


PROJECT NAME: STARBUCKS

PROJECT ADDRESS: 4380 Forest Hill Boulevard Village of Palm Springs, Florida

SEAL / SIGNATURE

GERARDO ZAMORA P.E.
CIVIL ENGINEER
P.E. No. 44207
E.B. 0006791
STATE OF FLORIDA

GERARDO ZAMORA LICENSE No. 44207 STATE OF FLORIDA PROFESSIONAL ENGINEER

3/24/2021

THIS ITEM HAS BEEN DIGITALLY SIGNED AND SEALED BY GERARDO ZAMORA JR P.E. ON THE DATE ADJACENT TO THE SEAL. PRINTED COPIES OF THIS DOCUMENT ARE NOT CONSIDERED SIGNED & SEALED AND THE SIGNATURE MUST BE VERIFIED ON ANY ELECTRONIC COPIES.

STORE #:

PROJECT #:

CONCEPT:

ISSUE DATE: 12/10/2020

DESIGN MANAGER:

LEED AP:

PRODUCTION DESIGNER:

CHECKED BY:

SHEET TITLE: TRAFFIC CIRCULATION PLAN

SCALE: 1 = 20'

SHEET NUMBER: **C-1A**

# GRADING PLAN

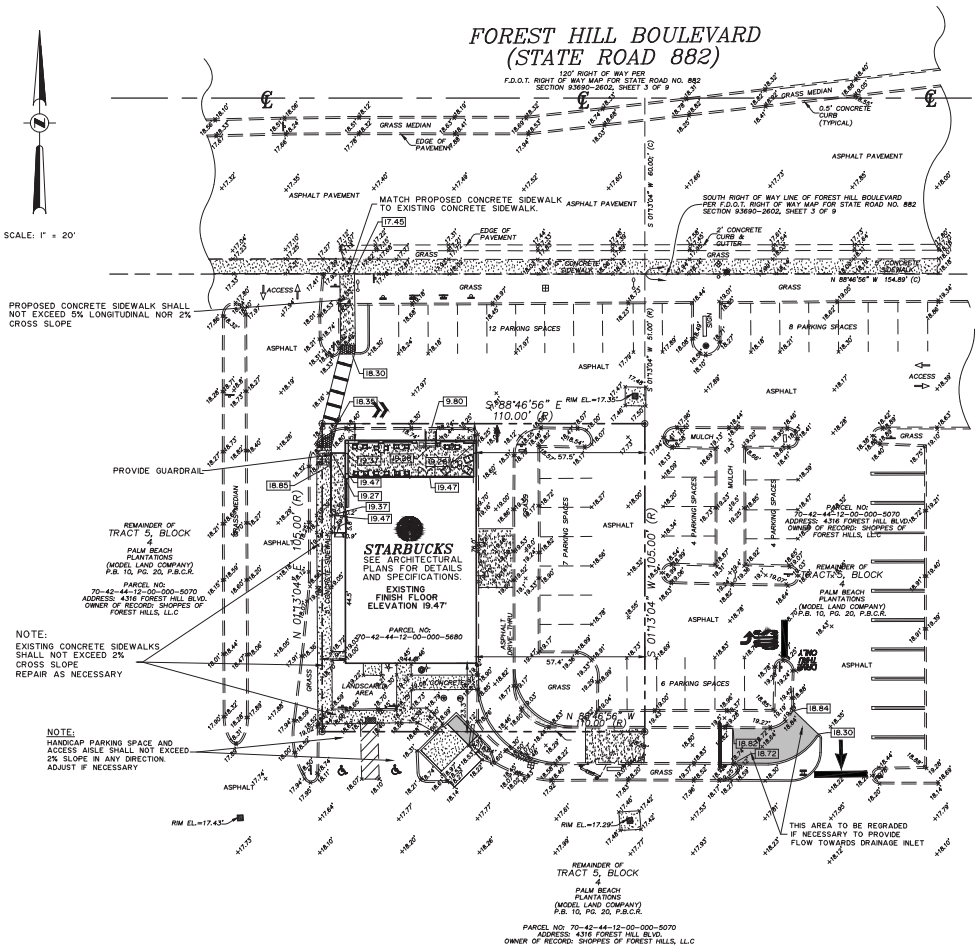


SCALE: 1" = 20'

## LEGEND

- EXISTING PAVEMENT
- PROPOSED PAVEMENT
- 9.50 EXISTING ELEVATION
- 10.9 PROPOSED ELEVATION
- PROPOSED CONCRETE
- PROPOSED ASPHALT PAVEMENT
- RUN OFF DIRECTION
- EXIST. TYPE "F" CURB & GUTTER
- PROP. TYPE "F" CURB & GUTTER
- ① DRAINAGE STRUCTURE NUMBER

## GENERAL NOTES:

1. All materials and labor under the project shall conform to Village of Palm Springs Public Works Department, Florida Department of Transportation (FDOT) and Palm Beach County Standards and Specifications.
2. For site dimensions and geometry see Boundary & Site Plan.
3. Elevations shown are based on N.A.V. (88) Datum and as shown on Survey.
4. Underground utility information is taken from the best available sources, but should be verified by contractor in the field with the appropriate utility agency prior to commencement of any work. Existing utility lines other than those indicated in this drawing may be on site. The contractor is warned to proceed with caution with all work. He is to make all possible investigation as to possible unmarked utility lines.
5. Contractor shall adjust any utility lids and/or covers in project area to the finished grade.
6. Any apparent discrepancies in the plans and field condition shall be brought to the attention of the Engineer before proceeding with the
7. Contractor shall notify the Owner's representative and Engineer if soil condition encountered is unsuitable for construction. Furthermore all existing organic materials shall be removed from beneath areas of new asphalt or concrete pavement and from proposed building locations. The full depth of all existing organic and deleterious material within the right of way and utility/drainage easements shall be removed. No material of FDOT Class A-5, A-7 or A-8 shall be allowed.
8. The Contractor shall restore all areas disturbed by this construction to a condition equal to, or better than, that now existing.
9. Typical Pavement Section: 1.5" Type S-III Asphaltic Concrete surface course 6" Limerock base (Minimum LBR 100), compact to 98% of maximum density as determined by AASHTO T-180 and 6" concrete slab on well compacted subgrade compact to 98% of maximum density as determined by AASHTO T-180.
10. Fill shall be placed in 12" layers loose thickness, measured and compacted to 95% of maximum density as determined by AASHTO T-180. Fill shall be locally acceptable and suitable for fill purposes. The top 12" of fill or cut (Minimum LBR 40) under pavement base shall be compacted to 98% of maximum density as determined by AASHTO T-180.
11. Backround information obtained from Boundary Survey prepared by ECS Professional Land Surveyors Inc. Dated December 9, 2020.
12. All signage and markings shall conform to the requirements of Palm Beach County, Florida.
13. This site lies in Section 12, Township 44 S, Range 42 East in Miami-Dade County.
14. All repairs to the existing pavement shall receive saw-cut edges prior to relaying asphalt. Utility piping or wiring less than four (4) inches in diameter requires a Schedule 40 PVC casing pipe with sand backfills under paved areas only.
15. Prime coat shall be applied at a rate of 0.25 gallons per square yard. Prime and tack coat for base shall conform to the requirements and specifications of sections 300-1 through 300-7 of FDOT standards specifications.
16. Base and subgrade density tests shall be conducted for a maximum 7000 square feet of finished pavement.
17. Proctors shall be performed on all material, subgrade and base and any subsequent changes in materials. Limerock bearing ratios, sieve analysis and densities required by contract documents shall be submitted to the City.
18. Minimum longitudinal slope of pavement shall be 0.3%.
19. Minimum transverse slope of the pavement shall be one percent for parking areas.

Gerardo Zamora
Digitally signed by Gerardo Zamora
Date: 2021.03.24 08:19:14 -04'00'

PROJECT No. 2020-69 DATE: 12/10/2020

**ZAMORA & ASSOCIATES, INC.**
ENGINEERING LAND PLANNING
8410 N. KENDALL DRIVE SUITE 302 MIAMI, FLORIDA 33176
(305) 273-7801 FAX (305) 273-9514

1. 3/22/2021 SITE PLAN REVIEW COMMENTS


STARBUCKS COFFEE COMPANY
2401 UTAH AVENUE SOUTH
SEATTLE, WASHINGTON 98134
(206) 318-1575



©2011 STARBUCKS COFFEE COMPANY

THESE DRAWINGS AND SPECIFICATIONS ARE CONFIDENTIAL AND SHALL REMAIN THE SOLE PROPERTY OF STARBUCKS CORPORATION, WHICH IS THE OWNER OF THE COPYRIGHT IN THIS WORK. THEY SHALL NOT BE REPRODUCED (IN WHOLE OR IN PART), SHARED WITH THIRD PARTIES OR USED IN ANY MANNER ON OTHER PROJECTS OR EXTENSIONS TO THIS PROJECT WITHOUT THE PRIOR WRITTEN CONSENT OF STARBUCKS CORPORATION. THESE DRAWINGS AND SPECIFICATIONS ARE INTENDED TO EXPRESS DESIGN INTENT FOR A PROTOTYPICAL STARBUCKS STORE (WHICH IS SUBJECT TO CHANGE AT ANYTIME) AND DO NOT REFLECT ACTUAL SITE CONDITIONS. NEITHER PARTY SHALL HAVE ANY OBLIGATION NOR LIABILITY TO THE OTHER (EXCEPT STATED ABOVE) UNTIL A WRITTEN AGREEMENT IS FULLY EXECUTED BY BOTH PARTIES.


PROJECT NAME: STARBUCKS

PROJECT ADDRESS: 4380 Forest Hill Boulevard Village of Palm Springs, Florida

SEAL / SIGNATURE

GERARDO ZAMORA P.E.
CIVIL ENGINEER
P.E. No. 44207
E.B. 0006791
STATE OF FLORIDA

GERARDO ZAMORA LICENSE No. 44207 STATE OF FLORIDA PROFESSIONAL ENGINEER

3/23/2021

THIS ITEM HAS BEEN DIGITALLY SIGNED AND SEALED BY GERARDO ZAMORA JR P.E. ON THE DATE ADJACENT TO THE SEAL. PRINTED COPIES OF THIS DOCUMENT ARE NOT CONSIDERED SIGNED & SEALED AND THE SIGNATURE MUST BE VERIFIED ON ANY ELECTRONIC COPIES.

STORE #:
PROJECT #:
CONCEPT:
ISSUE DATE: 12/10/2020
DESIGN MANAGER:
LEED AP:
PRODUCTION DESIGNER:
CHECKED BY:

SHEET TITLE: GRADING PLAN
SCALE: 1" = 20'

SHEET NUMBER: C-2

# MASTER SITE PLAN

**Sunshine811**

Call 811 or visit sunshine811.com two full business days before digging to have buried facilities located and marked.

*Check positive response codes before you dig!*

SCALE: 1" = 60'

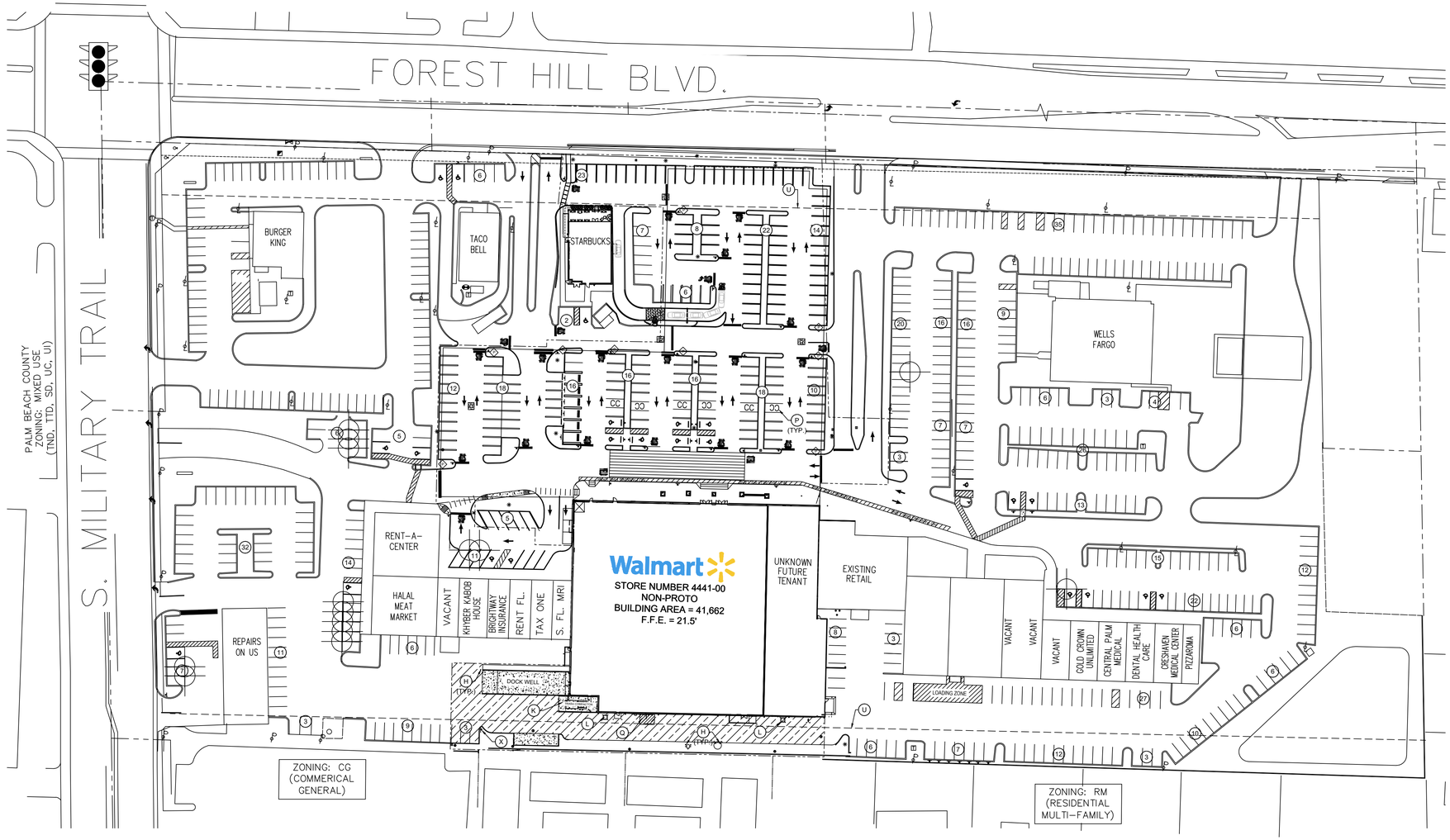


## LEGEND

- EXISTING BUILDING
- EXISTING CURB AND GUTTER
- (#) EXISTING PARKING SPACES
- EXISTING ASPHALT

## SITE NOTES

1. ALL WORK AND MATERIALS SHALL COMPLY WITH THE VILLAGE OF PALM SPRINGS REGULATIONS AND CODES AND O.S.H.A. STANDARDS.
2. SITE PLAN SHOWN IS BASED ON THE VILLAGE OF PALM SPRINGS APPROVED RESOLUTION 2015-53 DATED 07/09/2015.

| GENERAL BUILDING DATA | |
|---|---|
| TOTAL SHOPPING CENTER BUILDING AREA* | 122,042 SF |
| STARBUCKS | 70-42-44-12-00-000-5680 |
| ZONING CLASSIFICATION | CG (COMMERCIAL GENERAL) |
| EXISTING MAXIMUM BUILDING HEIGHT | 17'-0" |
| MAXIMUM BUILDING HEIGHT ALLOWED | 45'-0" OR 4 STORIES |
| NUMBER OF FLOORS | 1 |
| POINTS OF ACCESS | 7 |
| BUILDING SETBACK: MIN. FRONT YARD | 50'-0" |
| BUILDING SETBACK: MIN. REAR YARD (RESIDENTIAL) | 30'-0" |
| BUILDING SETBACK: MIN. SIDE YARD (INTERIOR) | 15'-0" |
| BUILDING SETBACK: MIN. SIDE YARD (CORNER) | 25'-0" |

| TOTAL EXISTING PARKING RATIO | |
|---|---|
| SHOPPING CENTER BUILDING AREA* | 122,042 SF |
| SHOPPING CENTER PARKING * | 631 |
| REQUIRED RATIO | 5.00 / 1000 SF |
| PROVIDED RATIO | 5.17 / 1000 SF |

BUILDING SF AND PROVIDED PARKING IS BASED ON THE ORIGINAL COUNTY APPROVED SITE PLAN (ADMINISTRATION DATE 9/4/2008), BURGER KING BUILDING SF AND PARKING IS NOT TAKEN INTO ACCOUNT IN ANY CALCULATIONS SHOWN.

PROJECT No. 2020-69 DATE: 12/10/2020


**ZAMORA & ASSOCIATES, INC.**
ENGINEERING LAND PLANNING
11410 N. KENDALL DRIVE SUITE 302 MIAMI, FLORIDA 33176
(305) 273-7801 FAX (305) 273-9514



©2011 STARBUCKS COFFEE COMPANY



STARBUCKS COFFEE COMPANY
2401 UTAH AVENUE SOUTH
SEATTLE, WASHINGTON 98134
(206) 318-1575



THESE DRAWINGS AND SPECIFICATIONS ARE CONFIDENTIAL AND SHALL REMAIN THE SOLE PROPERTY OF STARBUCKS CORPORATION, WHICH IS THE OWNER OF THE COPYRIGHT IN THIS WORK. THEY SHALL NOT BE REPRODUCED (IN WHOLE OR IN PART), SHARED WITH THIRD PARTIES OR USED IN ANY MANNER ON OTHER PROJECTS OR EXTENSIONS TO THIS PROJECT WITHOUT THE PRIOR WRITTEN CONSENT OF STARBUCKS CORPORATION. THESE DRAWINGS AND SPECIFICATIONS ARE INTENDED TO EXPRESS DESIGN INTENT FOR A PROTOTYPICAL STARBUCKS STORE (WHICH IS SUBJECT TO CHANGE AT ANYTIME) AND DO NOT REFLECT ACTUAL SITE CONDITIONS. NEITHER PARTY SHALL HAVE ANY OBLIGATION NOR LIABILITY TO THE OTHER (EXCEPT STATED ABOVE) UNTIL A WRITTEN AGREEMENT IS FULLY EXECUTED BY BOTH PARTIES.


PROJECT NAME: STARBUCKS

PROJECT ADDRESS: 4380 Forest Hill Boulevard Village of Palm Springs, Florida

SEAL / SIGNATURE

GERARDO ZAMORA P.E.
CIVIL ENGINEER
P.E. No. 44207
E.B. 0006791
STATE OF FLORIDA

GERARDO ZAMORA LICENSE No. 44207 STATE OF FLORIDA PROFESSIONAL ENGINEER

2/23/2021

THIS ITEM HAS BEEN DIGITALLY SIGNED AND SEALED BY GERARDO ZAMORA JR P.E. ON THE DATE ADJACENT TO THE SEAL. PRINTED COPIES OF THIS DOCUMENT ARE NOT CONSIDERED SIGNED & SEALED AND THE SIGNATURE MUST BE VERIFIED ON ANY ELECTRONIC COPIES.

STORE #:

PROJECT #:

CONCEPT:

ISSUE DATE: *12/10/2020*

DESIGN MANAGER:

LEED AP:

PRODUCTION DESIGNER:

CHECKED BY:

SHEET TITLE: *MASTER SITE PLAN*

SCALE: *1 = 60'*

SHEET NUMBER: **MSP**

ALL EXISTING TREES SHALL BE CORRECTIVELY PRUNED PER ANSI-300 STDS. ALL PRUNING SHALL BE SUPERVISED BY A CERTIFIED ARBORIST TYP. CONTRACTOR SHALL FIELD VERIFY LOCATION OF EXISTING AND PROPOSED UNDERGROUND UTILITIES CONTRACTOR SHALL INSTALL A ROOT BARRIER WHERE TREES ARE LOCATED WITHIN 5' OF UTILITY LINE. SEE DETAIL SHEET L-3

ROOT PRUNING REQUIRED ON EXISTING TREES DUE TO PROPOSED CURBING OR PAVING SHALL BE DONE BY A CERTIFIED ARBORIST. NO MACHING TRENCHING SHALL BE DONE WITHIN THE DRIP LINE OF TREES. ALL DIGGING SHALL BE BY HAND IN THESE AREAS.

NOTE: ALL LANDSCAPE MATERIALS WITHIN SIGHT TRIANGLES SHALL BE MAINTAINED BELOW 30" IN HEIGHT.

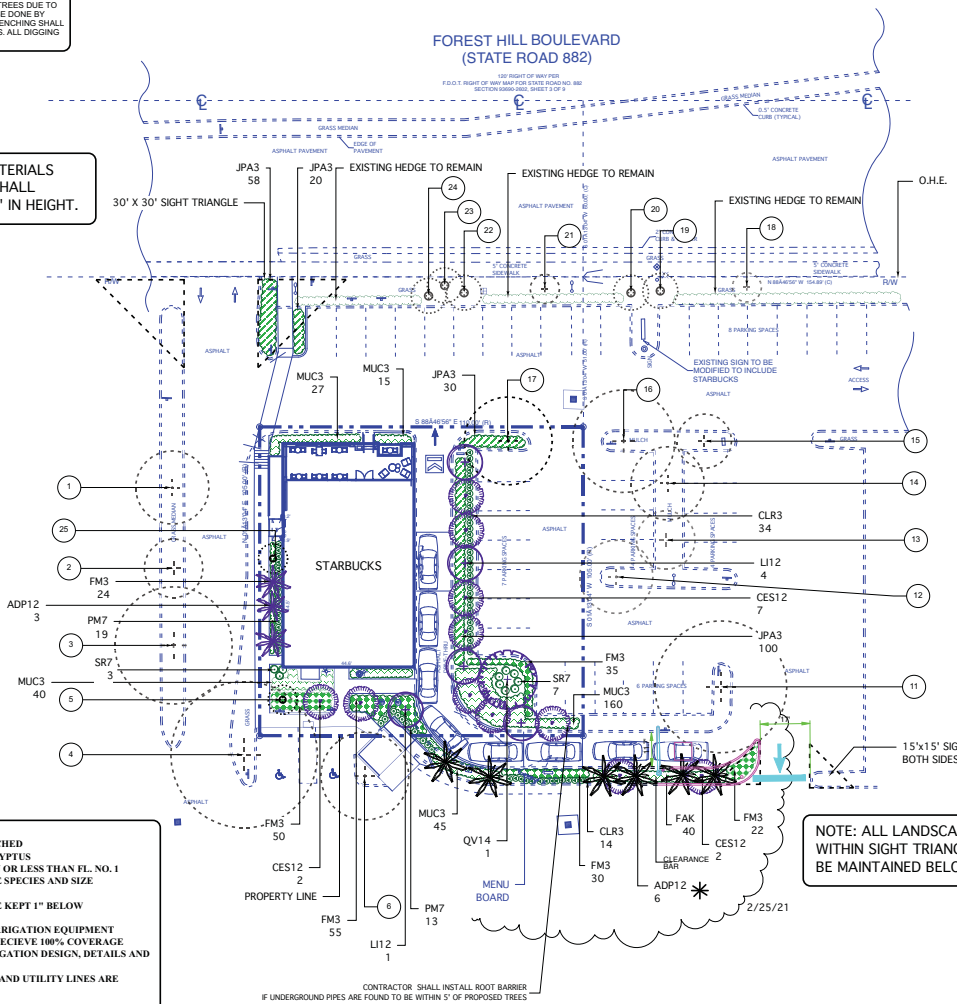


NOTE: ALL LANDSCAPE MATERIALS WITHIN SIGHT TRIANGLES SHALL BE MAINTAINED BELOW 30" IN HEIGHT.

**NOTES:**
1. ALL LANDSCAPE AREAS SHALL BE MULCHED WITH GRADE 'A' NATURAL PINE OR EUCALYPTUS
2. ALL SHRUBS/TREES IN POOR CONDITION OR LESS THAN FL. NO. 1 QUALITY SHALL BE REPLACED WITH SAME SPECIES AND SIZE (OR EQUIVALENT)
3. ALL MULCHED PLANTER BEDS SHALL BE KEPT 1" BELOW THE TOP OF CURBS
4. CONTRACTOR SHALL ADJUST OR ADD IRRIGATION EQUIPMENT TO ENSURE ALL LANDSCAPE MATERIALS RECIEVE 100% COVERAGE
5. REFER TO SHEET IR-1 AND IR-2 FOR IRRIGATION DESIGN, DETAILS AND SPECIFICATIONS
6. INSTALL ROOT BARRIER WHERE TREES AND UTILITY LINES ARE WITHIN 5' OF EACH OTHER.

• ALL TREES AND PALMS SHALL BE BRACED OR GUYED, AND ALL STRAPS OR WOOD BRACING SHALL BE REMOVED WITHIN ONE YEAR OF FINAL INSPECTION. • ALL EXISTING LANDSCAPING, INCLUDING BUT NOT LIMITED TO TREE, PALMS, SHRUBS, GROUNDCOVER, SOD, IRRIGATION, GRADING, AND CURBING DESTROYED DURING THE CONSTRUCTION SHALL BE RESTORED/REPLACED PRIOR TO FINAL INSPECTION. • ALL PROPOSED LANDSCAPING AND IRRIGATION SHALL MEET OR EXCEED FLORIDA FRIENDLY REQUIREMENTS. • ALL EXISTING DEAD, DYING OR MISSING LANDSCAPE SHALL BE REPLACED PRIOR TO FINAL LANDSCAPE INSPECTION

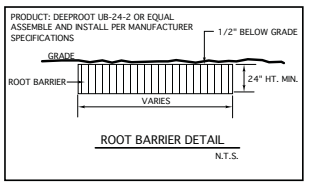


ROOT BARRIER DETAIL
N.T.S.

LANDSCAPE REQUIREMENTS
CITY OF PALM SPRINGS

ZONING: CG NET LOT AREA: 11,550 SF (.265 ACRES)

REQUIRED TREES
1 TREE PER 2,500 SF = 5 REQUIRED
PROVIDED =

VUA
1 TREE PER 200 SF OF LANDSCAPE AREA:
2,231 SF / 200 SF = 12 TREES REQUIRED
PROVIDED = 12

TOTAL TREES REQUIRED FOR SITE
REQUIRED = 17
PROVIDED = 15 PROPOSED + 2 EXISTING

50% MAX PALMS ALLOWED = 8
PROVIDED = 8
50% NATIVE TREES REQUIRED = 9
PROVIDED + EXISTING = 9

MITIGATION PALMS REQUIRED = 4
PROVIDED = 4 ✳

**MASTER PLANT LIST**

| KEY | PLANT NAME | SPECIFICATION | QUANTITY |
|---|---|---|---|
| ADP12 | VEITCHIA MERILLII ADONIDIA PALM | 10' CT. HT SINGLE TRUNK 3"DBH. STAGGER HTS, IN GROUPS HIGH DROUGHT TOLERANCE | 9 |
| CES12 | CONOCARPUS ERECTA SERECIUS SILVER BUTTONWOOD TREE | 12' X 5' SPR. 2.5" DBH. SINGLE TRUNK NATIVE HIGH DROUGHT TOLERANCE | 11 |
| LI12 | LAGERSTROEMIA INDICA CREPE MYRTLE 'NATACHEZ' | 12' X 5' SPR. 2.5" DBH. 4.5' CT. B&B SINGLE TRUNK HIGH DROUGHT TOLERANCE | 5 |
| QV14 | QUERCUS VIRGINIANA SOUTHERN LIVE OAK | 14' X 6' SPR. 3" DBH. 5' C.T. B&B NATIVE HIGH DROUGHT TOLERANCE | 1 |

**MASTER PLANT LIST**

| KEY | PLANT NAME | SPECIFICATION | QUANTITY |
|---|---|---|---|
| CLR3 | CLUSIA ROSEA NANA SMALL LEAF PITCH APPLE | 36 "X 24 " 24" O.C. NATIVE HIGH DROUGHT TOLERANCE | 48 |
| FM3 | FICUS MICROCARPA GREEN ISLAND FICUS | 12" X 15" SPR. 18" OC. MEDIUM DROUGHT TOLERANCE | 194 |
| JPA3 | JUNIPERUS PARSONII PARSONS JUNIPERT GROUND COVER | 12"X15" SPR. 18" O.C. HIGH DROUGHT TOLERANCE | 208 |
| MUC3 | MUHLENBERGIA CAPILLARIS MUHLY GRASS | 20" X 15" SPR. 15"-18" O.C. NATIVE HIGH DROUGHT TOLERANCE | 287 |
| PM7 | PODOCARPUS MACROPHYLA YEW PODOCARPUS | 36" X 24" SPR. 24" O.C. HIGH DROUGHT TOLERANCE | 32 |
| SR7 | SERENOA REPENS SAW PALMETTO | 24"X24" 7 GAL. MIN. NATIVE HIGH DROUGHT TOLERANCE | 10 |
| FAK | TRIPSACUM DACTYLOIDES FAKAHATCHEE GRASS | 36"X24"X24" O.C. NATIVE HIGH DROUGHT TOLERANCE | 40 |

NOTE: REFER TO SHEET L-3 FOR PLANTING DETAILS AND SPECIFICATIONS. REFER TO SHEET L-2 EXISTING TREE DISPOSITION INFORMATION

CONTRACTOR SHALL DO TAKE OFF FROM PLANS TO VERIFY PLANT QUANTITIES. CONTRACTOR SHALL VERIFY LOCATIONS OF ALL ABOVE AND UNDERGROUND UTILITIES PRIOR TO STARTING WORK. CONTRACTOR SHALL CONTACT LANDSCAPE ARCHITECT IF CONFLICTS ARISE IN THE FIELD THAT PROHIBATE THE CONTRACTOR FROM MEETING THE INTENT OF THE DESIGN.

CONTRACTOR SHALL FILL IN ANY GAPS IN EXISTING HEDGING TO ENSURE A FULL HEALTHY APPEARANCE IS IN PLACE AT TIME OF INSPECTION

811 Know what's Call before you dig. below.


LA #6666695 ISA #FL-0823A
3016 n.e. 45th street
ft. lauderdale, fl. 33308
tel. 954-568-4071
954-568-1049
e - mail@mcclure@yahoo.com
mailgroup.com
landscape architecture


REVISIONS:
SITE REV: 2/25/21

SHEET TITLE:
LANDSCAPE PLAN

PROJECT:
STARBUCKS
4380 FOREST HILL BOULEVARD
VILLAGE OF PALM SPRINGS, FLORIDA

SEAL:
james s mcclure
Digitally signed by james s mcclure
Date: 2021.03.23 10:52:43 -04'00'

SCALE: 1"=20'
DATE DRAWN: 12-10-20
SHEET NO.
L-1
of-3

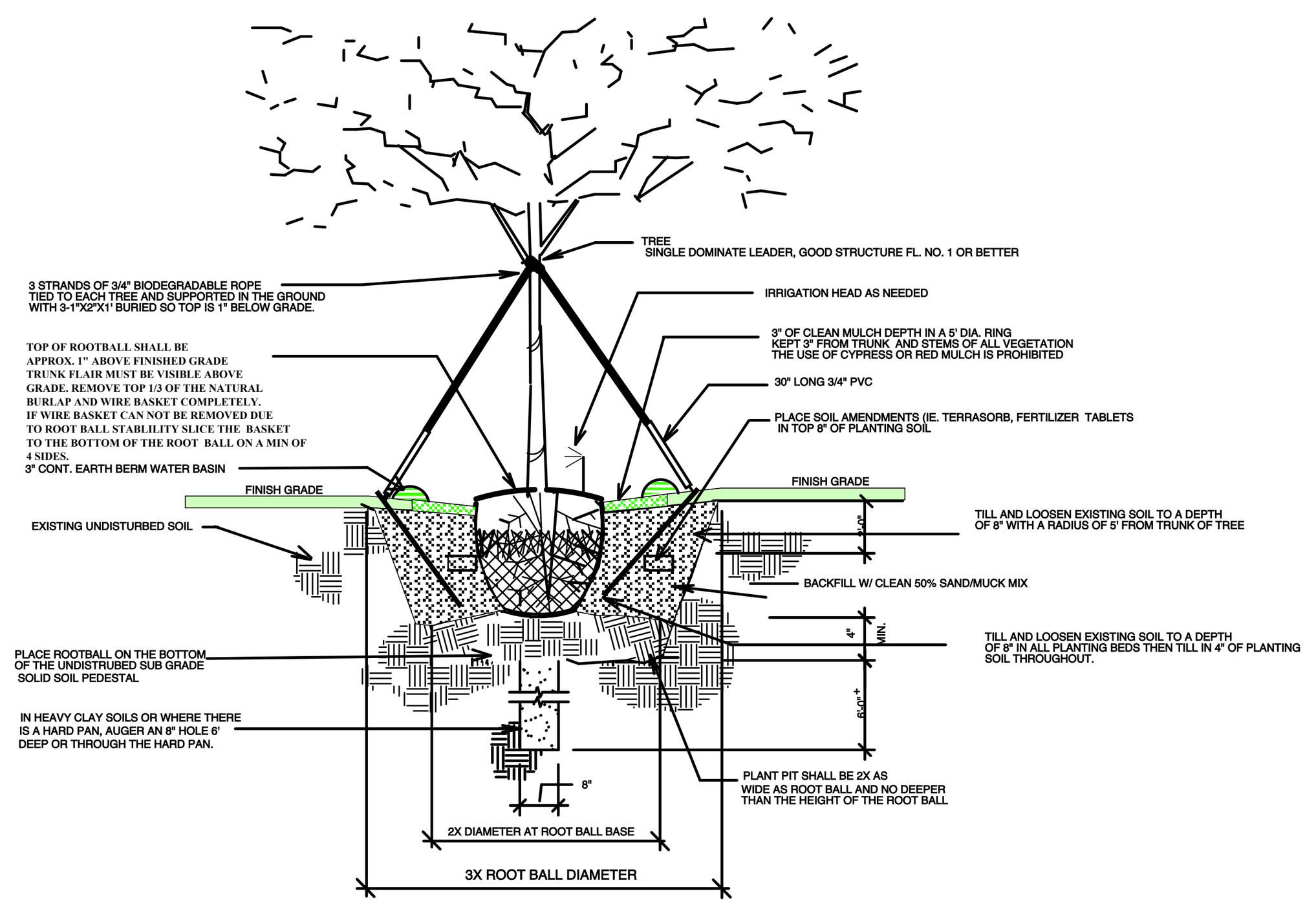


SINGLE TRUNK GUYING AND PLANTING DETAIL

NOT TO SCALE

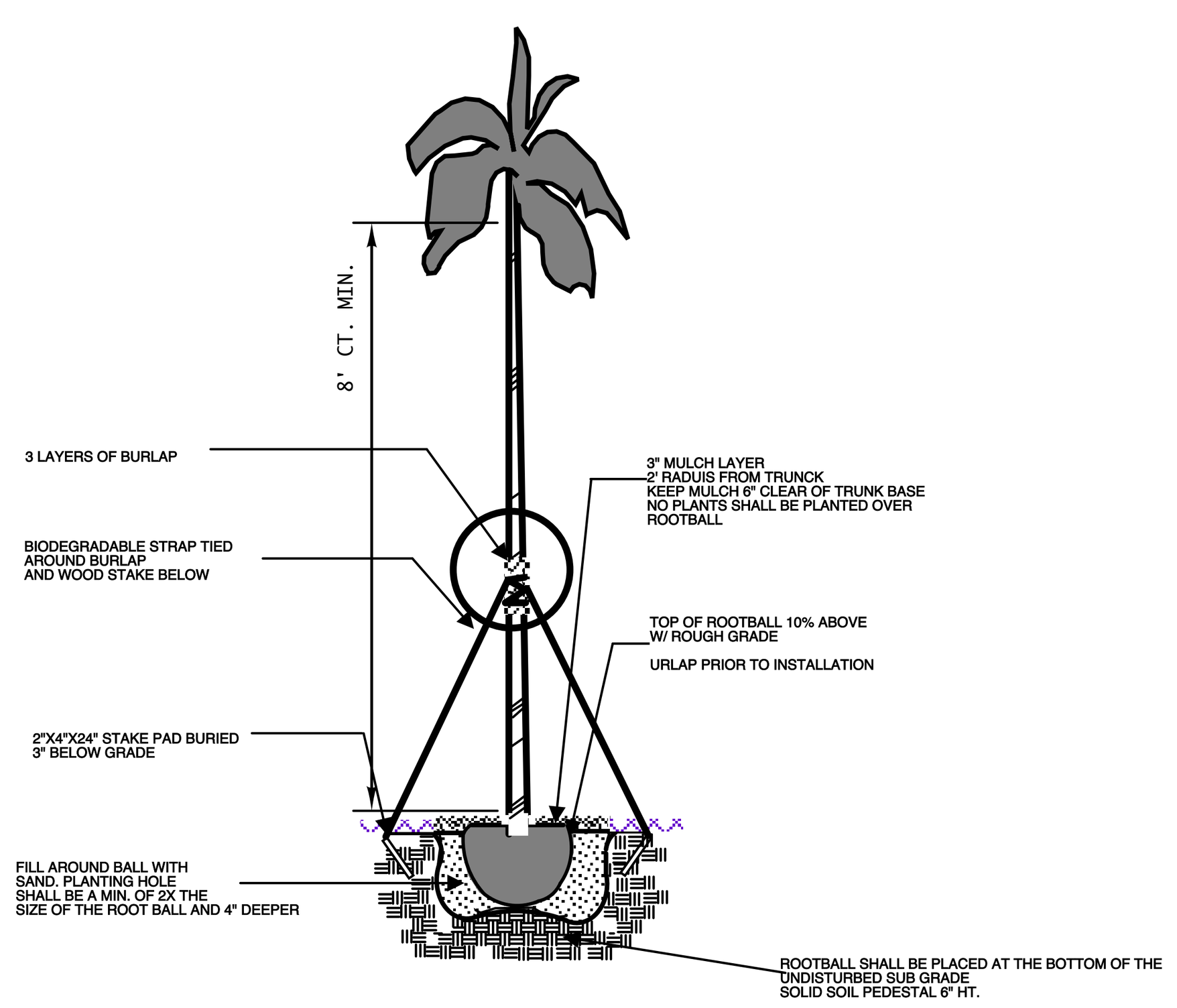


SOLITAIR PALM PLANTING DETAIL

NOT TO SCALE

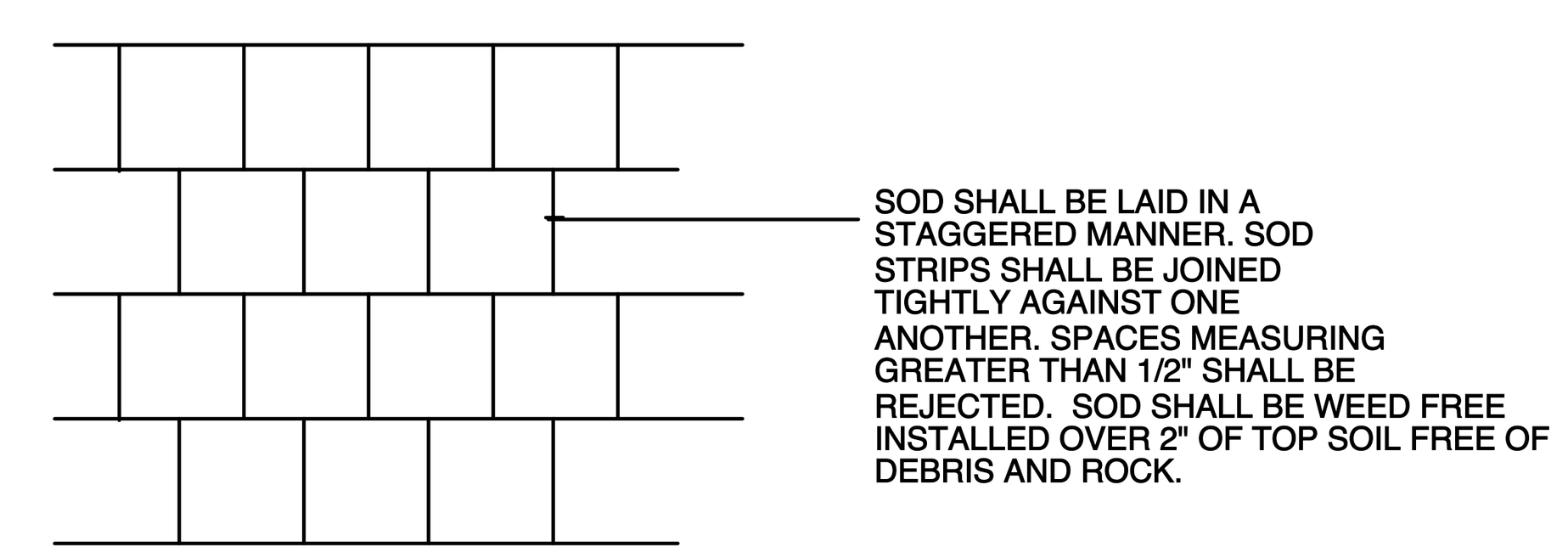


SOD PLANTING DETAIL

NOT TO SCALE

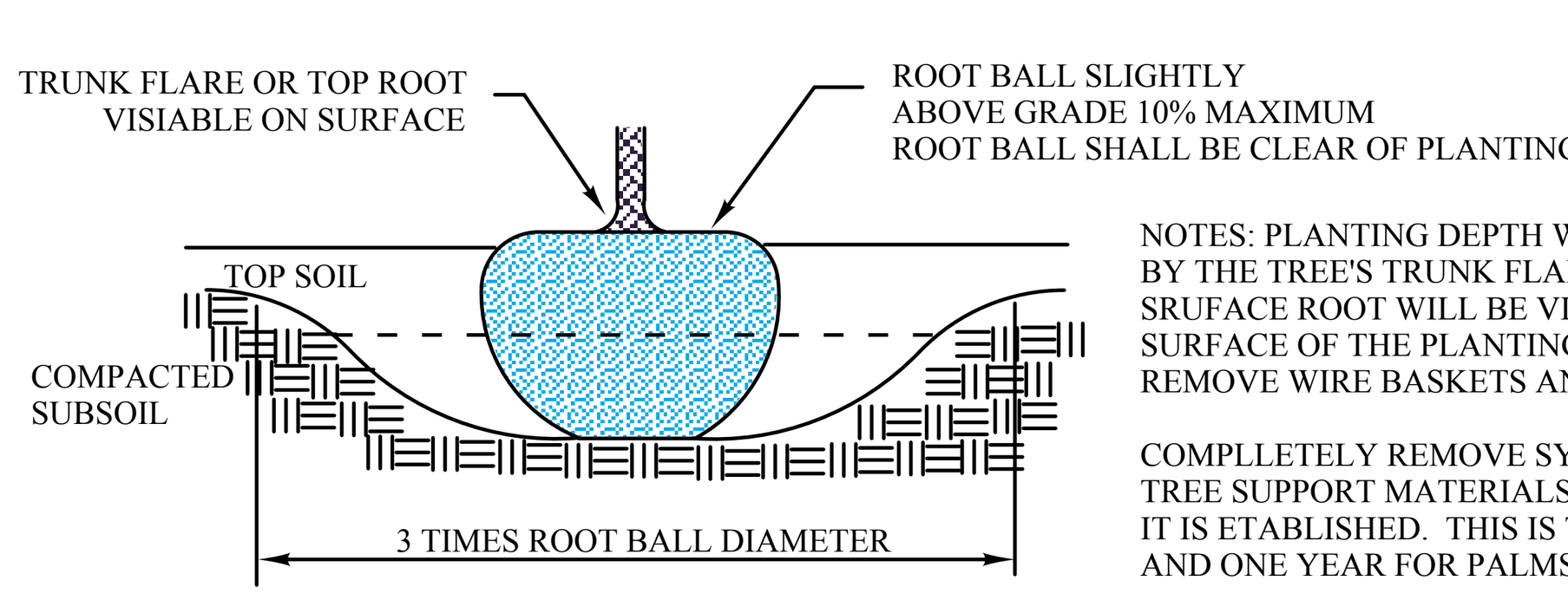


NOTES: PLANTING DEPTH WILL BE DETERMINED BY THE TREE'S TRUNK FLARE OR THE TOP SRUFACE ROOT WILL BE VISIBLE ON THE SURFACE OF THE PLANTING.
REMOVE WIRE BASKETS AND BURLAP PRIOR TO INSTALLATION

COMPLLETELY REMOVE SYNTHETIC BURLAP COVERING MATERIALS TREE SUPPORT MATERIALS SHALL BE REMOVED FROM EACH TREE ONCE IT IS ETABLISHED. THIS IS TYPICALLY DONE AFTER SIX MONTHS FOR SHADE TREES AND ONE YEAR FOR PALMS

ROOT BALL DETAIL

NOT TO SCALE

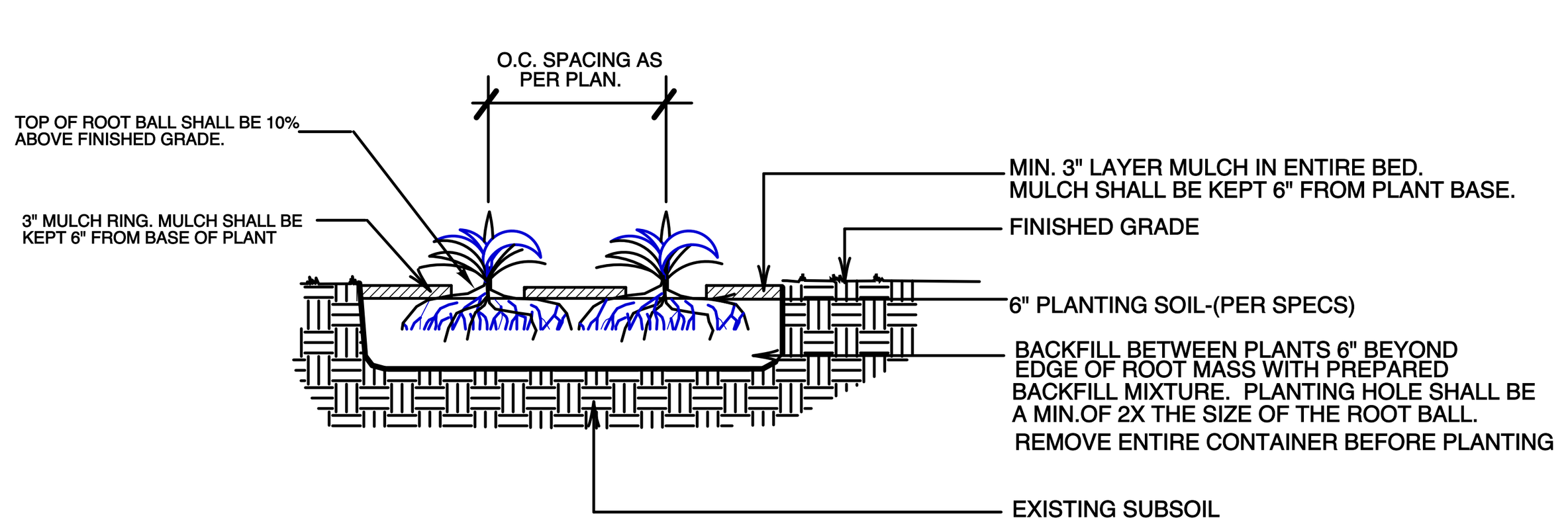


GROUNDCOVER/ANNUALS PLANTING DETAIL

NOT TO SCALE

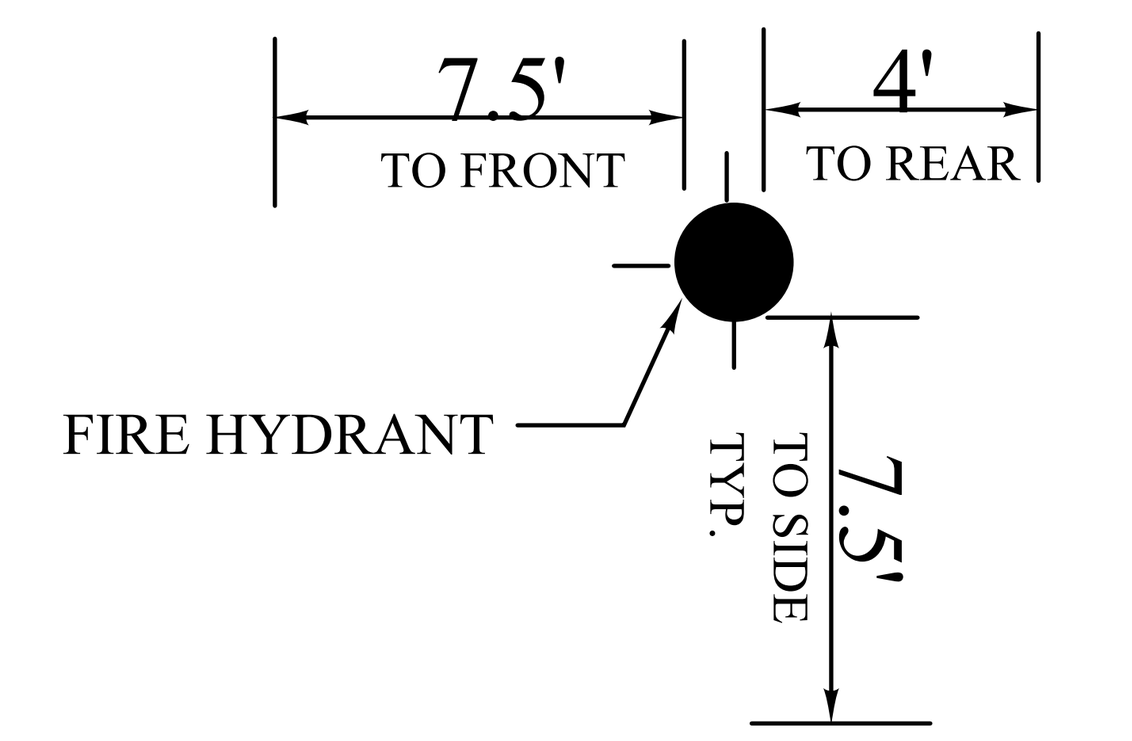


TYPICAL FIRE HYDRANT
CLEAR ZONE DETAIL

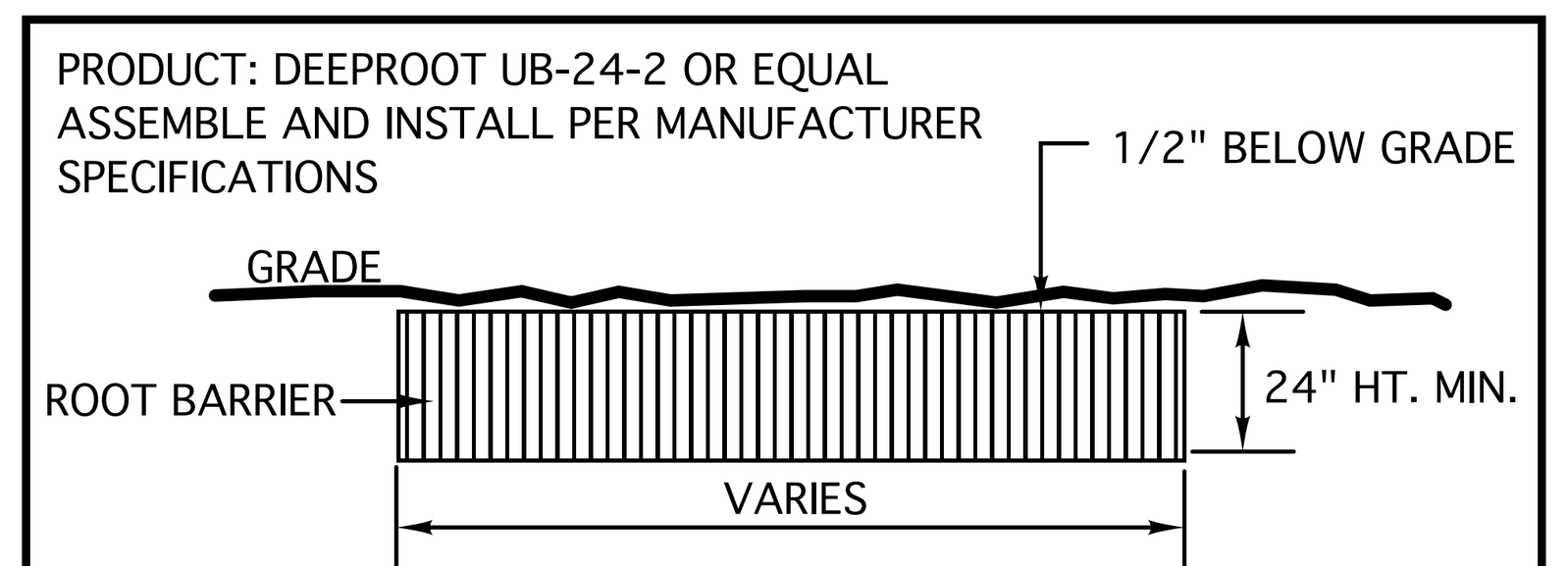


ROOT BARRIER DETAIL

N.T.S.

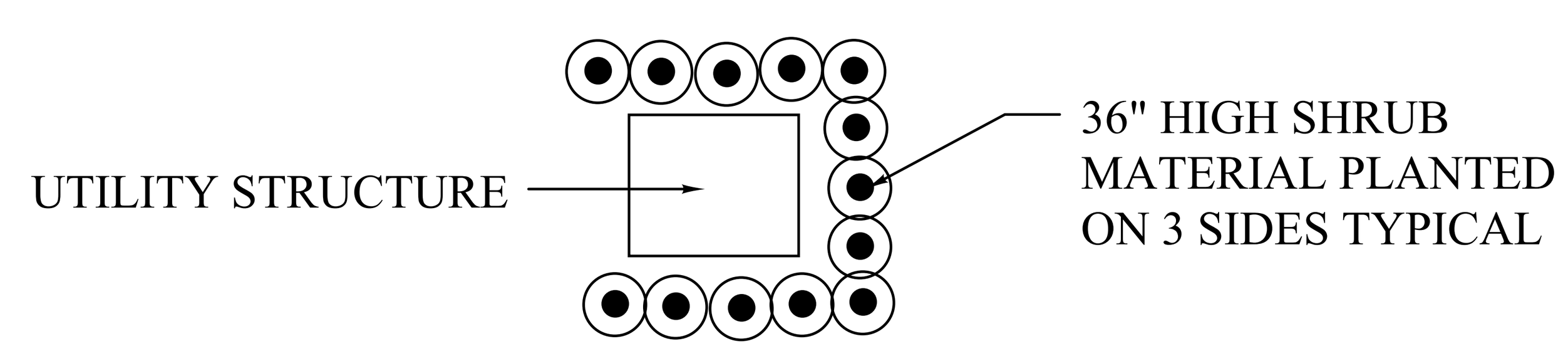


TYPICAL UTILITY SCREENING DETAIL

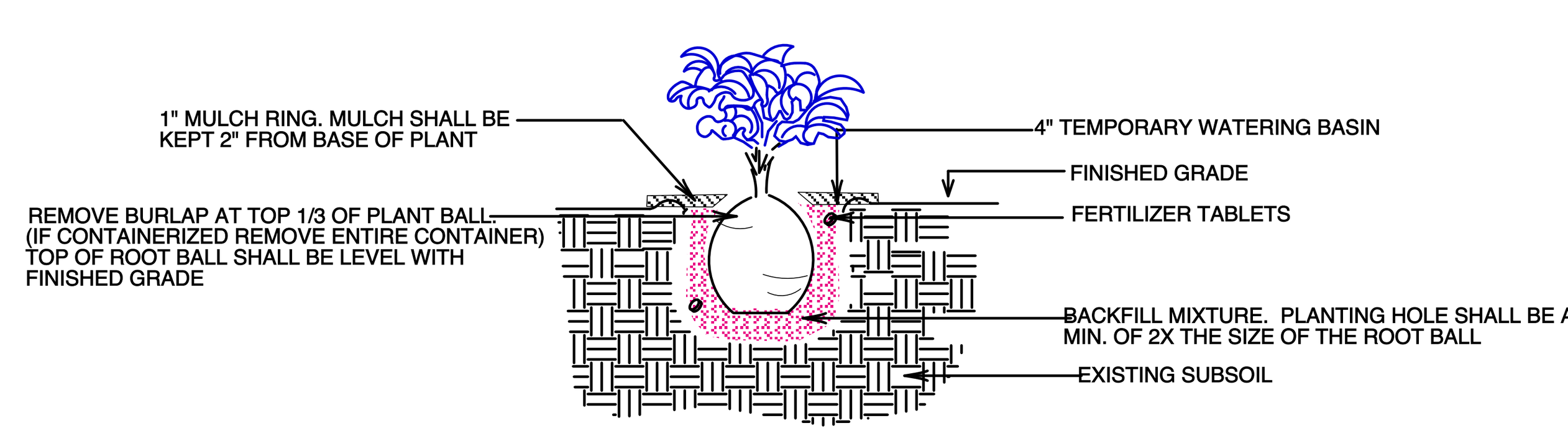


SHRUB PLANTING DETAIL

NOT TO SCALE

# GENERAL LANDSCAPE NOTES

## LANDSCAPE SPECIFICATIONS

1. CONTRACTOR SHOULD MAKE HIS OWN TAKE OFF TO ELIMINATE DISCREPANCIES. IN CASE THEY OCCUR, THE PLAN WIL TAKE PRECEDENCE OVER THE PLANT LIST.

2. EXACT LOCATION OF PLANT MATERIAL MAY VARY SLIGHTLY. COORDINATE FIELD LOCATIONS WITH OTHER TRADES PRIOR TO COMMENCEMENT OF WORK

3. ALL PLANT MATERIAL FURNISHED BY THE LANDSCAPE CONTRACTOR SHALL BE “FLORIDA #1” OR BETTER AND SHALL BE INSTALLED AS SPECIFIED IN “FLORIDA DEPT. OF AGRICULTURAL GRADES AND STANDARDS”. CURRENT EDITION RESPECTIVELY.

4. ALL PLANTING TO BE DONE ACCORDING TO GOOD NURSERY PRACTICE AND ADHEAR TO ALL MUNICIPAL REQUIREMENTS.

5. ALL PLANTING MATERIAL SHALL BE GUARANTEED 365 DAYS (I YEAR) FROM TIME OF FINAL INSPECTION & APPROVAL.

6. ALL SOD TO BE ST. AUGUSTIN FLORATAM SOLID UNLESS OTHERWISE SPECIFIED. DIFFERENT SOD TYPES SHALL BE SEPARATED BY EDGING, PLANT MATERIAL OR OTHER PHYSICAL BARRIER.

7. ALL BED AREAS TO RECEIVE A 3” LAYER OF ARSENIC FREE EUCALYPTUS MULCH/ FLORIMULCH, & SHALL BE A MIN. OF 1'-0” WIDER THAN PLANTS (MEASURED FROM OUTSIDE OF FOLIAGE)

8. ALL TREES MEET THE MINIMUM TRUNK DBH. AS SHOWN ON THE LANDSCAPE SPECIFICATIONS

9. ALL EXISTING LANDSCAPING INCLUDING BUT NOT LIMITED TO TREES, SHRUBS, GROUNDCOVER, SOD, IRRIGATION,GRADING AND CURBING DAMAGED DURING CONSTRUCTION SHALL BE RESTORED/REPLACED PRIOR TO FINAL INSPECTION.

10. LANDSCAPER TO FURNISH ALL MATERIAL AND LABOR INCLUDING, PLANTS MULCH, TOP DRESSING, SOIL PREPARATION, DECORATIVE ITEMS (IF SHOWN), INSPECTIONS. TRANSPORTATION, WARRANTY, PEMIT, ETC. NECESSARY FOR COMPLETION OF ALL LANDSCAPING REQUIRED HEREIN EXCEPT IF DESIGNATED TO BE OTHERS.

11. ALL PRINCIPALS OF FLORIDA FRIENDLY LANDSCAPING AND DESIGN STANDARDS SHALL BE UTILIZIED. ANY CHANGES TO MATERIALS, SIZES OR SPECIFICATIONS SHALL BE FIRST APPROVED BY THE LANDSCAPE ARCHITECT OF RECORD.

12. OWNER RESERVES THE RIGHT TO REJECT ANY OR ALL BIDS.

13. LANDSCAPER SHALL HAVE A COMPETENT ENGLISH SPEAKING SUPERINTENDENT PRESENT ON THE JOB WHO SHALL BE AUTHORIZED TO REPRESENT THE LANDSCAPER IN HIS ABSENCE.

14. PLANTS SHOULD BE TYPICAL FOR THEIR VARIETY AND SPECIES, PLANTS SHALL BE SOUND, HEALTHY VIGOROUS, FREE FROM PLANT DISEASE, INSECT OR THEIR EGGS. THEY SHALL HAVE HEALTHY NORMAL ROOTS AND SHALL NOT BE ROOT BOUND. QUALITY AND SIZE: ALL PLANT MATERIALS SHALL BE NURSERY GROWN UNLESS OTHERWISE NOTED.

15. ALL PLANT MATERIAL SHALL BE HANDLED IN A CAREFUL MANNER DURING TRANSPORTATION AND INSTALLATION.

16. PLANTS SHALL NOT BE PRUNED OR TOPPED BEFORE DELIVERY. ALL TREE PRUNING SHALL BE DONE IN ACCORDANCE WITH CURRENT ANSI- 300 STANDARDS.

17. OWNER RESERVES THE RIGHT TO APPROVE ALL PLANTS MATERIALS. OWNER OR OWNERS AGENT SHALL BE RESPONSIBLE FOR THE MAINTENANCE OF THE LANDSCAPING.

18 .LANDSCAPER SHALL REMOVE ALL TRASH AND DEBRIS FROM THE SITE DAILY. THE PREMISES SHALL BE KEPT NEAT AND ORDERLY AT ALL TMES WHILE WORK IS IN PROGRESS.

19.THE LANDSCAPE CONTRACTOR SHALL LAY OUT HIS WORK ACCORDING TO THE PLANS AND SPECIFICATIONS AND WILL BE RESPONSIBLE FOR ALL MEASUREMENTS EXERCISING SPECIAL CARE IN LAYING OUT WORK TO KEEP WITHIN PROPERTY LINES AND RECOGNIZING EASEMENTS AND UTILITIES. THE LANDSCAPE CONTRACTOR WILL BE HELD RESPONSIBLE FOR ANY ERRORS. CONTRACTOR TO NOTIFY LANDSCAPE ARCHITECT OF ANY DISCREPANCIES IN LAYOUT.

20. METHODS OF PROTECTION SHALL BE MAINTAINED AT ALL TIMES, AS REQUIRED TO INSURE ALL PERSONS AND PROPERTY AGAINST INJURY, AND SHALL BE MAINTAINED UNTIL THE COMPLETION OF ALL WORK. THE LANDSCAPE CONTRACTOR SHALL PROVIDE AN ENGLISH SPEAKING FORMAN ON THE JOB AT ALL TIMES.

21. PLANT MATERIAL ABBREVIATIONS ON THE PLANT LIST: FG (FIELD GROWN); CT (INDICATES CLEAR TRUNK MEASUREMENT FROM THE TOP OF BALL TO FIRST BRANCHING OR BASE OF THE LOWESR FROND), GAL (GALLON CAN), 3 GAL (3 GALLON CAN); OA (INDICATES OVERALL HEIGHT FROM TOP OF BALL TO MID POINT OF CURRENT SEASON'S GROWTH); SPR (INDICATES SPREAD), HVY (INDICATED HEAVY), MIN (INDICATES MINIMUM).

22. SUBSTITUTION: PLANT SUBSTITUTION REQUESTS, FOR PLANT MATERIAL NOT OBTAINABLE IN THE TYPE AND SIZE SPECIFIED SHALL BE MADE PRIOR TO SUBMISSION OF BIDS. ALL SUBSTITUTION REQUESTS SHALL BE DIRECTED TO THE LANDSCAPE ARCHITECT AND THE GOVERNING MUNICIPALITY FOR CONSIDERATION AND APPROVAL. IT IS THE LANDSCAPE CONTRACTORS OBLIGATION TO KNOW WHERE THEY CAN OBTAIN ALL MATERIAL AT THE TIME OF BIDDING AND AT THE TIME A CONTRACT IS EXECUTED.

23. THE CONTRACTOR'S GUARANTEE SHALL NOT APPLY IN THE EVENT OF FIRE, FLOOD, HURRICANE, WINDSTORM, OR OTHER ACTS OF NATURE OR DAMAGES TO LANDSCAPING IN PROGRESS CAUSED BY ANY PERSONS OTHER THAN THOSE PERSONS UNDER THE DOMINION AND CONTROL OF THE CONTRACTOR.

24. ALL TREES, PALMS AND OTHER PLANTS SHALL BE PLANTED WITH THE TOP OF THEIR ROOTBALLS 10% ABOVE FINAL GRADE SURROUNDING THE PLANTING AREA. ALL WIRE BASKETS, BURLAP, STRING AND ROPE MUST BE REMOVED. ALL TREE OR PALMS IN LAWN AREAS SHALL RECEIVE A 2 FOOT DIAMETER MULCH RING. MULCH SHALL BE PULLED AWAY FROM THE TRUNKS 3”. ALL PLANTING PITS SHALL BE A MIN. OF 3X THE ROOTBALL SIZE. ALL TREES AND PALMS SHALL BE BRACED OR GUYED. ALL NYLON STRAPS AND WOOD BRACING SHALL BE REMOVED WITHIN ON YEAR OF FINAL INSPECTION.

25. DELIVERY RECEIPTS FOR TOP SOIL, PLANTING SOIL & MULCH SHALL BE SUPPLIED TO THE INSPECTOR OR LANDSCAPE ARCHITECT UPON REQUEST

26. COMMERCIAL FERTILIZER: COMMERCIAL FERTILIZER SHALL BE AN ORGANIC FERTILIZER CONTAINING NITROGEN, PHOSPHORIC ACID, MINOR TRACE ELEMENTS AND POTASH IN EQUAL PERCENTAGES OF AVAILABLE PLANT FOOD WEIGHT OR “MILORGANITE” NITROGEN SHALL BE NOT LESS THAN 100% FROM ORGANIC SOURCE. FERTILIZER SHALL BE DELIVERED TO THE SITE UNOPENED IN ORIGINAL CONTAINERS, EACH BEARING THE MANUFACTURE'S GUARANTEED ANALYSIS. INITIAL FERTILIZATION OF TREES SHRUBS, GROUND COVERS, SHALL BE WITH “MILORGANITE” OR AN APPROVED COMPLETE FERTILIZER. APPLY “MILORGANITE” IN A CIRCLE AROUND THE PLANT BEFORE MULCHING DO NOT TOUCH THE PLANT WITH THE FERTILIZER. WATER IN FERTILIZER AFTER MULCHING. APPLY “MILORGANITE” FERTILIZER AT THE FOLLOWING AT THE RATE:

5 LBS OR 14.5 CUPS / PALMS
3 LBS OR 8.70 CUPS /12'-16' MATERIAL
2 LBS OR 5.80 CUPS / 8' -12' MATERIAL
0.69 LBS OR 2.00 CUPS / 6'-8' MATERIAL
0.19 LBS OR _ CUP /3 GAL.MATERIAL
0.10 LBS OR _ CUP/ 1 GAL. MATERIAL
FERTILIZERS SHALL BE SLOW TIME RELEASE, UNIFORM IN COMPOSITION DRY, AND FREE FLOWING AND SHALL MEET THE FOLLOWING REQUIREMENTS:
SIX (6) PERCENT NITROGEN, SIX (6) PERCENT PHOSPHOROUS, AND SIX (6) PERCENT POTASSIUM. FERTILIZER SHALL BE APPLIED TO ALL SHRUBS (1/3 LB PER 3 GAL. CONTAINER, _ LB PER 1 GAL. CONTAINER) AND GROUNDCOVER THE SOD STARTER FERTILIZER MIXTURE SHALL BE A 5-10-10 AT A RATE OF 20 LBS. PER 1000 S.F. A 14-14-14 FERTILIZER IS REQUIRED ON ALL TREES AND SHRUBS OVER 5' IN HEIGHT (1/2 LB. PER 5' OF SPREAD). AGRIFORM TABLETS WITH TWENTY (20) PERCENT NITROGEN, TEN (10) PERCENT PHOSPHOROUS, FIVE (5) PERCENT POTASSIUM IN 21 GRAM SIZES & SHALL BE APPLIED AT THE FOLLOWING RATE: 1 PER GAL. PLANT 2 PER 3 GAL. PLANTS AND 2 TABLES PER 1” OF TREE TRUNK CALIPER APPLY PALM SPECIAL FERTILIZER AS PER MANUFACTURES RECOMMENDATION.

27. SUPER ABSORBENT POLYMER: “TERRA SORB” OR APPROVED EQUAL AS PACKAGED IN 3 OZ. HANDY PAC COMPOSED OF SYNTHETIC ACRLAMIDE COLOLYMER, POTASSIUM, AND ACRYLATE. PARTICLE SIZE OF 1.0 MM TO 3.0 MM AND ABSORPTION RATE OF 300 TIMES IT'S WEIGHT IN WATER. APPLY DRY USING THE FOLLOWING AMOUNT:
1 PAC PER TREE - 36” BALL SIZE
2 PAC PER TREE -OVER 36” BALL SIZE
1 PAC PER 20 GAL. CONTAINER
0.5 PACS PER 7-10 GAL. CONTAINER
0.25 PACS PER 3 GAL. CONTAINER
0.12 PACS PER 1GAL. CONTAINER

28. LANDSCAPE CONTRACTOR WILL BE RESPONSIBLE FOR HAVING UTILITIES LOCATED BY CALLING SUNSHINE ONE CALL SERVICE OR EQUAL. CARE SHALL BE TAKEN NOT TO DISTURB ANY UNDERGROUND CONSTRUCTION AND UTILITIES. ANY DAMAGE TO THESE FACILITIES DURING THE PLANTING OPERATIONS WILL BE REPAIRED AT THE EXPENSE OF THE LANDSCAPE CONTRACTOR IN A MANNER APPROVED BY THE OWNER.

29. PLANTING SOIL: PLANTING SHALL BE COMPOSED OF 50% SAND AND 50% MUCK. ANY VARIATIONS IN THIS COMPOSITION SHALL BE APPROVED BY THE OWNER PRIOR TO USE. PLANTING SOIL SHALL BE FREE OF STONE. PLANTS, ROOTS AND OTHER FOREIGN MATERIALS WHICH MIGHT BE HINDRANCE TO PLANTING OPERATIONS OR BE DETRIMENTAL TO GOOD PLANT GROWTH. SOIL SHALL BE DELIVERED IN A LOOSE FRIABLE CONDITION AND APPLIED IN ACCORDANCE WITH THE PLANTING SPECIFICATION

30. WATER FOR PLANTING SHALL BE AVAILABLE AT THE SITE AND SHALL BE PROVIDED BY THE OWNER/GC. AN AUTOMATIC UNDERGROUND RUST FREE IRRIGATION SYSTEM SHALL BE PROVIDED WITH A RAIN SENSOR. THE IRRIGATION SHALL COVER 100% WITH 100% OVERLAP PRIOR TO FINAL INSPECTION.

31. PRUNING: REMOVE DEAD AND BROKEN BRANCHES FROM ALL PLANT MATERIAL PRUNE TO RETAIN TYPICAL GROWTH HABIT OF INDIVIDUAL SPECIES, RETAINING AS MUCH HEIGHT AND SPREAD AS POSSIBLE. MAKE ALL PRUNING CUTS WITH A SHARP INSTRUMENT, FLUSH WITH THE TRUNK OR ADJACENT BRANCH, IN SUCH A MANNER AS TO ENSURE ELIMINATION OF STUBS. “HEADBACK” CUTS, RIGHT ANGLE TO LINE OF GROWTH WILL NOT BE PERMITTED AND TREES WILL NOT BE POLED, TOPPED, OR HATRACKED.

32. SITE PREPARATION: IT SHALL BE RESPONSIBILITY OF THE LANDSCAPE CONTRACTOR TO FINISH (FINE) GRADE ALL LANDSCAPE AREAS TO BE SODDED (PRIOR TO APPLICATION OF SOD) ELIMINATING ALL BUMPS, DEPRESSIONS, STICKES, STONES AND OTHER DEBRIS TO THE SATISFACTION OF THE CITY/TOWN INSPECTOR

33. MAINTENANCE: MAINTENACE SHALL BEGIN IMMEDIATELY AFTER EACH PLANT IS PLANTED AND SHALL CONTINUE UNTIL ALL PLANTING HAS PASSED FINAL INSPECTION AND ACCEPTANCE. MAINTENANCE SHALL INCLUDE WATERING, WEEDING, CULTIVATING, REMOVAL OF DEAD MATERIALS, RESETTING PLANTS TO PROPER GRADES OR UPRIGHT POSITION AND RESTORATION OF THE PLANTING SAUCER AND ANY OTHER NECESSARY OPERATION. PROPER PROTECTION TO LAWN AREAS SHALL BE PROVIDED AND ANY DAMAGE RESULTING FROM PLANTING OPERATIONS. SHALL BE REPAIRED PROMPTLY. ALL TREE/PALM TRIMMING SHALL BE DONE IN ACCORDANCE WITH ANSI-300 STANDARDS. ALL OWNERS OF THE LAND OR THEIR AGENTS SHALL BE RESPONSIBLE FOR THE MAINTENANCE OF THE LANDSCAPING

34. (NOTE: SABAL PALMETTO/CABBAGE PALM SPECIES TIE BRANCHES TOGETHER WITH BIO-DEGRADABLE TWINE TO TIGHT BUNDLE AROUND BUD FOR PROTECTION.

35. MULCH. MULCH MAY BE USED WITHIN PLANTING BEDS IN CONJUNTION WITH GROUND COVER. MULCH SHALL BE RENEWED AND MAINTAINED AS REQUIRED TO MAINTAIN A THREE- INCH DEPTH AT THE TIME OF FINAL INSPECTION. MULCH AROUND TREE ROOT BALLS NOT PLANTED IN PLANTING AREA SHALL BE THREE INCHES DEEP AT THE PERIMETER OF THE ROOT BALL. SEE FIGURES 1 AND 2 AT THE END OF THE CHAPTER.

36. GRASS. AREAS WITHIN THE LANDSCAPE EASEMENT NOT USED FOR TREES, SHRUBS, GROUND COVER, MULCH, OR OTHER LANDSCAPE ELEMENTS SHALL BE PLANTED WITH SOLID SOD OF ST. AUGUSTINE FLORATAM OR PLAMETTO AND SHALL BE IRRIGATED. SOD SHALL BE WEED/PEST FREE INCLUDING FUNGUS AND DISEASE, LAID SMOOTH WITH TIGHT JOINTS AND CUT TO CONFORM TO CURBS AND PLANTERS.

37. WHERE THE LANDSCAPE EASEMENT ABUTS ON SITE VEHICULAR USE AREAS SUCH AS TRAFFIC LANES, THE LANDSCAPE EASEMENT SHALL BE SEPARATED FROM THE TRAFFIC LANES BY CONTINUOS CONCRETE CURBING WITH AN 18-INCH DEPTH BELOW GRADE. EXTRUDED CURBING INSTALLED ON TOP OF THE PAVING IS PROHIBITED.

38 .EXCAVATION REQUIREMENT: REQUIRED: ISLANDS/MEDIANS SHALL BE EXCAVATED TO 30 INCHES, AND BACK FILLED WITH CLEAN FILL AND PLANTING SOIL CONSISTING OF 50% MUCK AND 50% SAND AT LEAST 3” BELOW THE TOP OF CURB. MANIPULATION OF THE GRADE BEHIND THE CURBING TO CREATE SMALL SCALE MOUNDING IS ENCOURAGED. REQUIRED EXCAVATION AT BUILDING FOUNDATIONS SHALL BE 12 INCHES AND BACK FILLED WITH CLEAN FILL AND PLANTING SOIL. PLANTING SOIL SHALL BE FREE OF DEBRIS, WEED, ROCK, AND PH BETWEEN 6.5 AND 7.0

39. A LANDSCAPE PERMIT IS REQUIRED FOR ALL LANDSCAPE INSTALLATIONS INCLUDING NEW SINGLE FAMILY HOMES THAT ARE NOT PART OF A PLANNED COMMUNITY. NO TREES OR OTHER PLANT MATERIAL MAY BE PLANTED IN PUBLIC RIGHTS-OF-WAY (SWALE AREAS) WITHOUT PERMIT FROM THE CITY. NO SHRUB SPECIES WITH A MATURE HEIGHT THAT WILL BLOCK THE CLEAR SIGHT ZONE FROM 30 INCHES IN HEIGHT TO SIX FEET IN EIGHT WILL BE APPROVED IN SWALE AREAS.

40. TOPSOIL SHALL BE CLEAN AND FREE OF CONSTRUTION DEBRIS, WEEDS, ROCKS, NOXIOUS PESTS AND DISEASES, AND EXHIBITT A PH OF 6.5 TO 7.0. THE TOPSOIL FOR PLANTING AREAS SHALL BE AMENDED WITH HORTICULTURALLY ACCEPTABLE ORGANIC ATERIAL. ALL SOIL USED SHALL BE SUITABLE FOR THE INTENDED PLANT MATERIAL. THE SOURCE OF THE TOPSOIL SHALL BE KNOWN TO THE APPLICANT AND SHALL BE ACCEPTABLE TO THE CITY

MINIMUM SOIL DEPTH:
REQUIRED: THE MINIMUM PLANTING SOIL DEPTH SHALL BE SIX INCHES FOR GROUND COVERS, FLOWERS, SHRUBS AND HEDGES.
ROOTBALL SOIL:
REQUIRED: TREES SHALL RECEIVE 12 INCHES OF PLANTING SOIL AROUND THE ROOT BALL.
NATIVE SOIL:
REQUIRED: NATIVE TOPSOIL ON THE SITE SHALL BE RETAINED ON-SITE AND USED WHEN THERE IS SUFFICIENT QUANTITY TO COVER AT LEAST SOME OF THE ON-SITE LANDSCAPED AREAS.
ARID PLAMS:
REQUIRED: CLEAN SAND SHALL BE USED TO BACKFILL ARID CLIMATE PALMS.

41. USE OF ORGANIC MULCHES:
A TREE-INCH MINIMUM THICKNESS OF APPROVED ORGANIC ARSENIC FREE MULCH MATERIAL AT THE TIME OF FINAL INSPECTION, SHALL BE INSTALLED IN ALL LANDSCAPE AREAS NOT COVERED BY BUILDING, PAVEMENT, SOD, DECORATIVE STONES, PRESERVED AREAS AND ANNUAL FLOWER BEDS. EACH TREE SHALL HAVE A RING OF ORGANIC MULCH AT THE PERIMETER OF THE ROOT BALL.

42. ALL SHADE TREES INSTALLED WITHIN SIX FEET OF PUBLIC INFRASTRUCTURE SHALL UTILIZE A ROOT BARRIER SYSTEM AS APPROVED BY THE CITY.

43. THE ERADICATION OF NUISANCE VEGETATION (EXOTICS) EXISTING ON SITE REQUIRED ON ALL SITES. INCLUDING ABUTTING RIGHTS-OF WAY, PRIOR TO THE ISSUANCE OF CERTIFICATE OF OCCUPANCY PRIVATELY OWNED NATURAL AREAS SHALL BE INCLUDED IN THIS REQUIREMENT. FICUS BENJAMINA AND FICUS NITIDA MAY BE USED FOR HEDGE MATERIAL WITH A FIVE-FOOT SEPARATION FROM WATER LINES. FICUS HEDGES MAY NOT BE PLANTED IN UTILITY EASEMENTS

44. HEDGES: WHERE REQUIRED SHALL BE PLANTED SO AS TO BE TIP TO TIP WITHIN SIX MONTH S OF PLANTING AND MAINTAINED SO AS TO FORM A CONTINOUS VISUAL SCREEN. SHRUBS USED AS HEDGES SHALL BE FLORIDA DEPARTMENT OF AGRICULTURE GRADE No 1 OR BETTER WITH A MINIMUM HEIGHT OF 24 INCHES AND MINIMUM SPREAD OF 24 INCHES, WHEN MEASURED IMMEDIATELY AFTER PLANTING AND SHALL BE MINIMUM OF THREE FEET IN HEIGHT WITHIN TWO YEARS FROM THE DATE OF PLATING. HEDGES SHALL BE PLANTED WITH BRANCHES TOUCHING, WITHIN SIX MONTHS OF PLANTING SO AS TO CREATE A SOLID SCREEN WITH NO VISUAL SPACES BETWEEN PLANTS AT THIS TIME, PLANTS SPACING MAY BE ADJUSTED ACCORDING TO PLAT SIZES SO LONG A THE PRECEDING IS ACHIEVED. ALL GROUNDCOVER SHALL BE INSTALLED AT 75% COVERAGE AND 100% WITHIN 6 MONTHS AFTER FINAL ACCEPTANCE.

45. ALL ABOVE GROUND ELEMENTS INCLUDING BUT NOT LIMITED TO DUMPSTERS, FENCES, WALLS, A/C UNITS, IRRIGATION PUMPS, TRANSFORMERS AND GENERATORS SHALL BE SCREENED WITH LANDSCAPE MATERIAL TO A HEIGHT OF 36” MIN.

46. AN AUTOMATIC IRRIGATION SYSTEM SHALL BE INSTALLED TO PROVIDE RUST FREE 100% COVERAGE & 100% OVERLAP. CONTRACTOR SHALL ENSURE THERE IS NO OVERSPRAY ONTO IMPERVIOUS AREAS. ALL IRRIGATION PVC RISERS SHALL BE PAINTED FLAT BLACK

LA-6666695 ISA-0827A
1016 ne 45th street
oakland park, fl. 33334
tel. 954-763-4071
954-763-1047
e-mlagroupinc@yahoo.com
mlagroupinc.com
landscape architecture

REVISIONS:

SHEET TITLE:
LANDSCAPE DETAILS AND SPECIFICATIONS

PROJECT:
STARBUCKS
4380 FOREST HILL BOULEVARD
VILLAGE OF PALM SPRINGS, FLORIDA

SEAL:
LANDSCAPE ARCHITECT
JAMES McCLURE
SEAL:
No. LA-6666695
STATE OF FLORIDA

DATE DRAWN: 12-10-20

SHEET NO.
L-3
of-3

# SITE DETAILS PLAN

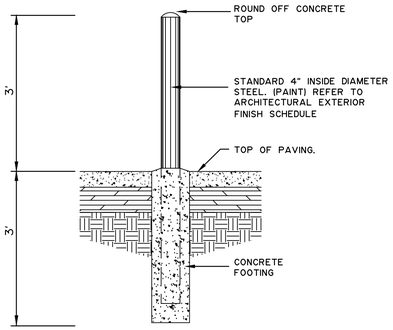


BOLLARD DETAIL

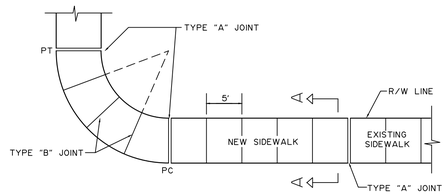


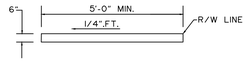


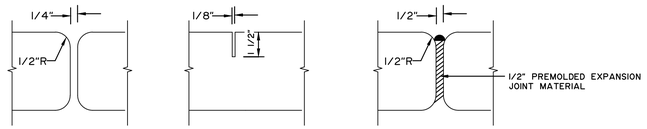


| TABLE OF SIDEWALK THICKNESS - "T" | |
|---|---|
| LOCATION | "T" |
| RESEDENTIAL AREAS | 4" |
| AT DRIVEWAYS AND OTHER AREAS | 6" |

| TABLE OF SIDEWALK JOINTS | |
|---|---|
| TYPE | LOCATION |
| "A" | P.C. AND P.T. CURVES JUNCTION OF EXISTING AND NEW SIDEWALKS |
| "B" | 5'-0" CENTER TO CENTER ON SIDEWALKS |
| "C" | × WHERE SIDEWALK ABUTS CONCRETE CURBS, DRIVEWAYS, AND SIMILAR STRUCTURES |

× = AT THE DISCRETION OF THE ENGINEER

SIDEWALK CONSTRUCTION

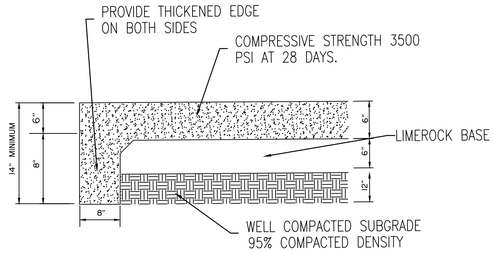


CONCRETE PAVEMENT DETAIL

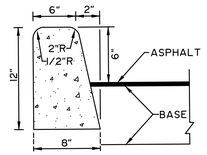


1 CURB DETAIL

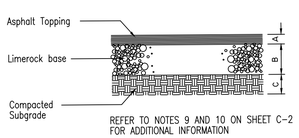


DIMENSION & TYPE

| Concrete Section | A | B | C |
|---|---|---|---|
| STANDARD | 1.5" | 6" | 12" |
| | | | |
| | | | |

ASPHALT PAVEMENT DETAIL

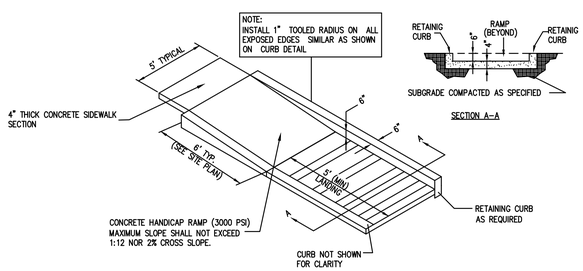


14 HANDICAP RAMP

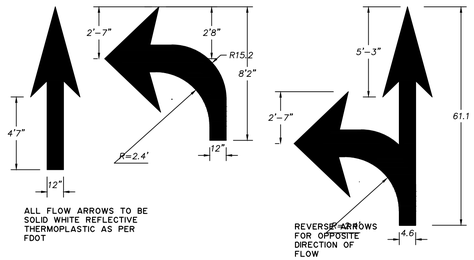


10 DIRECTIONAL ARROWS

PROJECT No. 2020-69 DATE: 12/10/2020


ZAMORA & ASSOCIATES, INC.
ENGINEERING LAND PLANNING
11410 N. KENDALL DRIVE SUITE 302 MIAMI, FLORIDA 33176
(305) 273-7801 FAX (305) 273-9514



©2011 STARBUCKS COFFEE COMPANY



STARBUCKS COFFEE COMPANY
2401 UTAH AVENUE SOUTH
SEATTLE, WASHINGTON 98134
(206) 318-1575



THESE DRAWINGS AND SPECIFICATIONS ARE CONFIDENTIAL AND SHALL REMAIN THE SOLE PROPERTY OF STARBUCKS CORPORATION, WHICH IS THE OWNER OF THE COPYRIGHT IN THIS WORK. THEY SHALL NOT BE REPRODUCED (IN WHOLE OR IN PART), SHARED WITH THIRD PARTIES OR USED IN ANY MANNER ON OTHER PROJECTS OR EXTENSIONS TO THIS PROJECT WITHOUT THE PRIOR WRITTEN CONSENT OF STARBUCKS CORPORATION. THESE DRAWINGS AND SPECIFICATIONS ARE INTENDED TO EXPRESS DESIGN INTENT FOR A PROTOTYPICAL STARBUCKS STORE (WHICH IS SUBJECT TO CHANGE AT ANYTIME) AND DO NOT REFLECT ACTUAL SITE CONDITIONS. NEITHER PARTY SHALL HAVE ANY OBLIGATION NOR LIABILITY TO THE OTHER (EXCEPT STATED ABOVE) UNTIL A WRITTEN AGREEMENT IS FULLY EXECUTED BY BOTH PARTIES.


PROJECT NAME: STARBUCKS

PROJECT ADDRESS: 4380 Forest Hill Boulevard Village of Palm Springs, Florida

SEAL / SIGNATURE

GERARDO ZAMORA P.E.
CIVIL ENGINEER
P.E. No. 44207
E.B. 0006791
STATE OF FLORIDA

GERARDO ZAMORA LICENSE No. 44207 STATE OF FLORIDA PROFESSIONAL ENGINEER

2/23/2021

THIS ITEM HAS BEEN DIGITALLY SIGNED AND SEALED BY GERARDO ZAMORA JR P.E. ON THE DATE ADJACENT TO THE SEAL. PRINTED COPIES OF THIS DOCUMENT ARE NOT CONSIDERED SIGNED & SEALED AND THE SIGNATURE MUST BE VERIFIED ON ANY ELECTRONIC COPIES.

STORE #:

PROJECT #:

CONCEPT:

ISSUE DATE: *12/10/2020*

DESIGN MANAGER:

LEED AP:

PRODUCTION DESIGNER:

CHECKED BY:

SHEET TITLE: *SITE DETAILS PLAN*

SCALE: *1 = 20'*

SHEET NUMBER: **C-3**

# PHOTOMETRIC PLAN

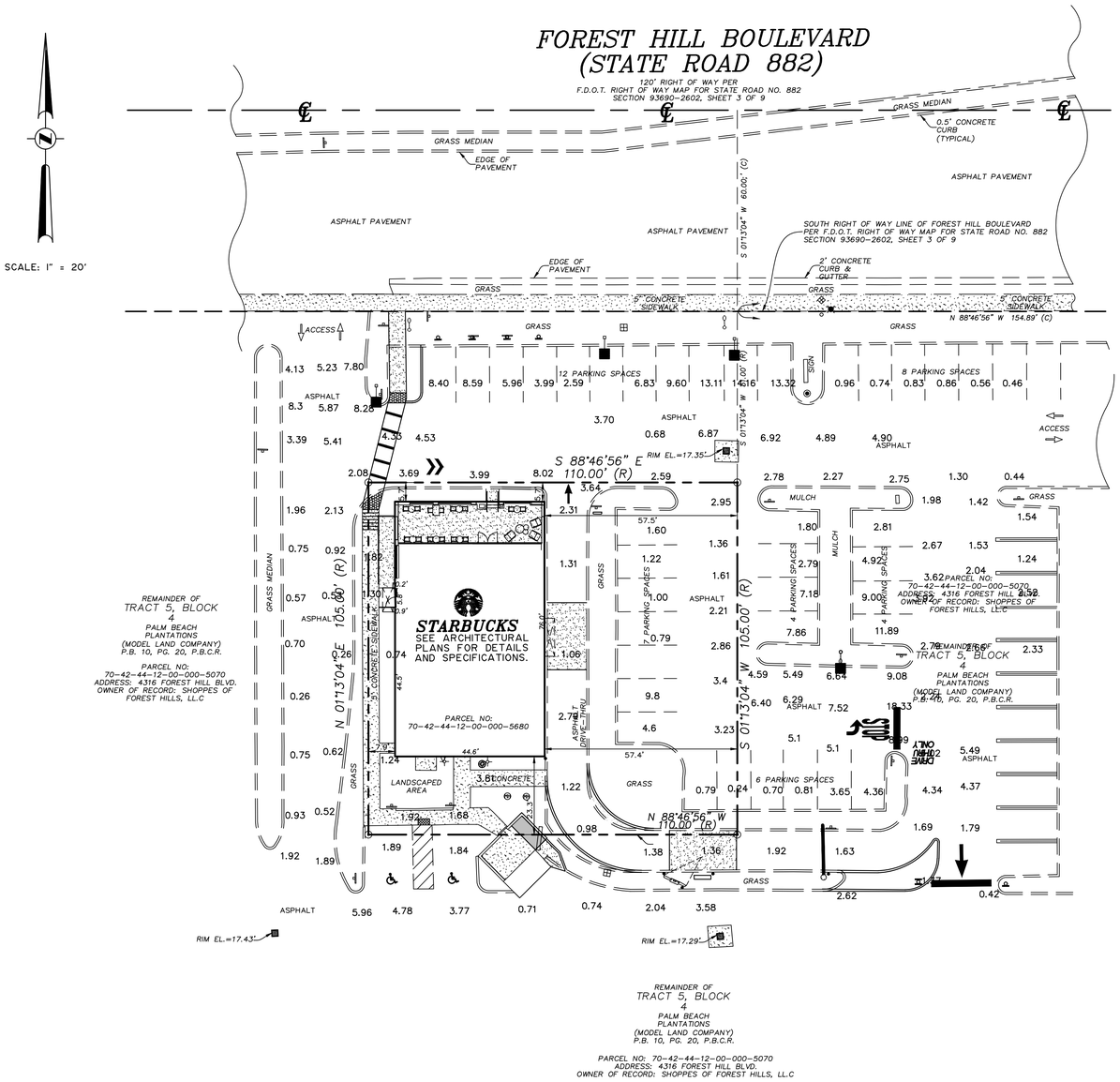


SCALE: 1" = 20'

## LEGEND

- EXISTING PAVEMENT
- PROPOSED PAVEMENT
- 9.10 EXISTING ELEVATION
- 10.9 PROPOSED ELEVATION
- PROPOSED CONCRETE
- PROPOSED ASPHALT PAVEMENT
- RUN OFF DIRECTION
- EXIST. TYPE "F" CURB & GUTTER
- PROP. TYPE "F" CURB & GUTTER
- (1) DRAINAGE STRUCTURE NUMBER

PROJECT No. 2020-69 DATE: 12/10/2020


**ZAMORA & ASSOCIATES, INC.**
ENGINEERING LAND PLANNING
11410 N. KENDALL DRIVE SUITE 302 MIAMI, FLORIDA 33176
(305) 273-7801 FAX (305) 273-9514



©2011 STARBUCKS COFFEE COMPANY



STARBUCKS COFFEE COMPANY
2401 UTAH AVENUE SOUTH
SEATTLE, WASHINGTON 98134
(206) 318-1575



THESE DRAWINGS AND SPECIFICATIONS ARE CONFIDENTIAL AND SHALL REMAIN THE SOLE PROPERTY OF STARBUCKS CORPORATION, WHICH IS THE OWNER OF THE COPYRIGHT IN THIS WORK. THEY SHALL NOT BE REPRODUCED (IN WHOLE OR IN PART), SHARED WITH THIRD PARTIES OR USED IN ANY MANNER ON OTHER PROJECTS OR EXTENSIONS TO THIS PROJECT WITHOUT THE PRIOR WRITTEN CONSENT OF STARBUCKS CORPORATION. THESE DRAWINGS AND SPECIFICATIONS ARE INTENDED TO EXPRESS DESIGN INTENT FOR A PROTOTYPICAL STARBUCKS STORE (WHICH IS SUBJECT TO CHANGE AT ANYTIME) AND DO NOT REFLECT ACTUAL SITE CONDITIONS. NEITHER PARTY SHALL HAVE ANY OBLIGATION NOR LIABILITY TO THE OTHER (EXCEPT STATED ABOVE) UNTIL A WRITTEN AGREEMENT IS FULLY EXECUTED BY BOTH PARTIES.


PROJECT NAME: STARBUCKS

PROJECT ADDRESS: 4380 Forest Hill Boulevard Village of Palm Springs, Florida

SEAL / SIGNATURE

GERARDO ZAMORA P.E.
CIVIL ENGINEER
P.E. No. 44207
E.B. 0006791
STATE OF FLORIDA

GERARDO ZAMORA LICENSE No. 44207 STATE OF FLORIDA PROFESSIONAL ENGINEER

2/23/2021

THIS ITEM HAS BEEN DIGITALLY SIGNED AND SEALED BY GERARDO ZAMORA JR P.E. ON THE DATE ADJACENT TO THE SEAL. PRINTED COPIES OF THIS DOCUMENT ARE NOT CONSIDERED SIGNED & SEALED AND THE SIGNATURE MUST BE VERIFIED ON ANY ELECTRONIC COPIES.

STORE #:

PROJECT #:

CONCEPT:

ISSUE DATE: 12/10/2020

DESIGN MANAGER:

LEED AP:

PRODUCTION DESIGNER:

CHECKED BY:

SHEET TITLE: PHOTOMETRIC PLAN

SCALE: 1 = 20'

SHEET NUMBER: **PH-1**

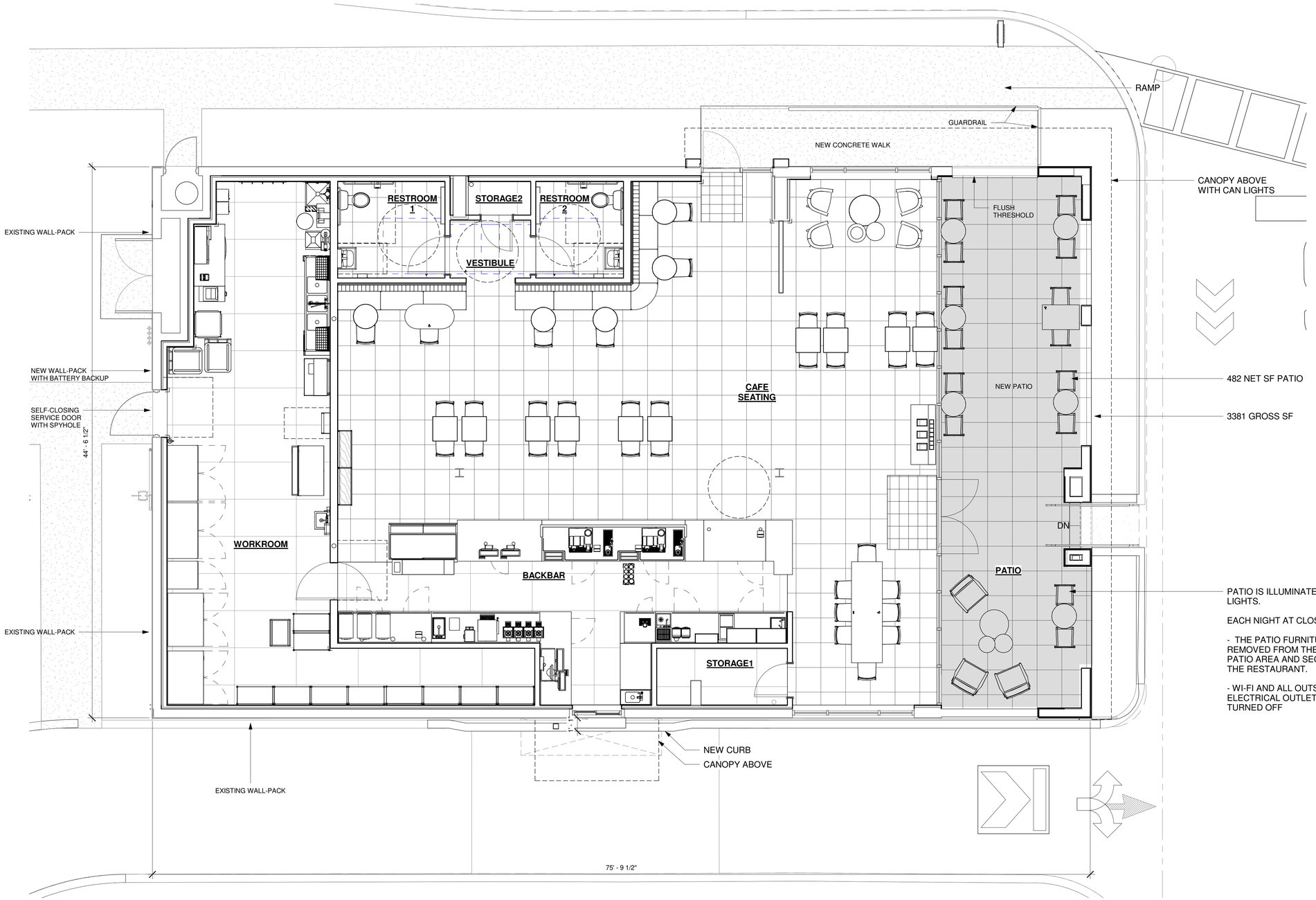


PATIO IS ILLUMINATED WITH CAN LIGHTS.

EACH NIGHT AT CLOSING TIME:

- THE PATIO FURNITURE WILL BE REMOVED FROM THE OUTSIDE PATIO AREA AND SECURED WITHIN THE RESTAURANT.

- WI-FI AND ALL OUTSIDE ELECTRICAL OUTLETS WILL BE TURNED OFF

1 SCHEMATIC FLOOR PLAN
Scale: 1/4" = 1'-0"

0 2' 4' 8'
Scale: 1/4" = 1'-0"

N

SCHEMATIC DESIGN ONLY - NOT INTENDED FOR CONSTRUCTION USE

© 2017 STARBUCKS COFFEE COMPANY

**STARBUCKS®**
2401 UTAH AVENUE SOUTH
SEATTLE, WASHINGTON 98134
(206) 318-1575

THESE DRAWINGS AND THE PROJECT MANUAL ARE CONFIDENTIAL AND SHALL REMAIN THE SOLE PROPERTY OF STARBUCKS CORPORATION, WHICH IS THE OWNER OF THE COPYRIGHT IN THIS WORK. THEY SHALL NOT BE REPRODUCED (IN WHOLE OR IN PART), SHARED WITH THIRD PARTIES OR USED IN ANY MANNER ON OTHER PROJECTS OR EXTENSIONS TO THIS PROJECT WITHOUT THE PRIOR WRITTEN CONSENT OF STARBUCKS CORPORATION. THESE DRAWINGS AND SPECIFICATIONS ARE INTENDED TO EXPRESS DESIGN INTENT FOR A PROTOTYPICAL STARBUCKS STORE (WHICH IS SUBJECT TO CHANGE AT ANYTIME) AND DO NOT REFLECT ACTUAL SITE CONDITIONS. NEITHER PARTY SHALL HAVE ANY OBLIGATION NOR LIABILITY TO THE OTHER (EXCEPT STATED ABOVE) UNTIL A WRITTEN AGREEMENT IS FULLY EXECUTED BY BOTH PARTIES.

STARBUCKS TEMPLATE VERSION i2020-04-20

**ARCHITECT OF RECORD**
ASOOSOCIATES
Soos & Associates, Inc.
105 Schelter Road
Lincolnshire, IL 60069
p: 847 821 7667

PROJECT NAME:
FOREST HILL BLVD &
MILITARY TRL

PROJECT ADDRESS:
4380 Forest Hill Blvd
West Palm Beach, FL 33406

STORE #:
PROJECT #: 88231-001
ISSUE DATE: 03/24/2021
DESIGN MANAGER: IVETTE CARDENAS
PRODUCTION DESIGNER: SOOS
CHECKED BY:

**Revision Schedule**

| Rev | Date | By | Description |
|---|---|---|---|
| | | | |
| | | | |
| | | | |
| | | | |
| | | | |

SHEET TITLE:
SCHEMATIC FLOOR PLAN
SCALE: AS SHOWN

SHEET NUMBER:
SD2

3/24/2021 2:08:29 PM E:\Revit\88231-001_Forest Hill Blvd & Military Trail_CENTRAL2_cchone3.rvt

## INDOOR SEATING CALCULATIONS

| DESCRIPTION | NUMBER OF ITEMS | SEATS PER ITEM | TOTAL |
|---|---|---|---|
| TABLE TOP, SQUARE | 10 | 2 SEATS | 20 |
| COMMUNITY TABLE | 1 | 8 SEATS | 8 |
| TABLE TOPS AT BANQUETTE | 6 | 1 SEAT | 6 |
| BANQUETTE | 1 | 9 SEATS | 9 |
| SOFT SEATING | 4 | 1 SEAT | 4 |
| | | | |
| | | TOTAL | 47 |

## OUTDOOR SEATING CALCULATIONS

| DESCRIPTION | NUMBER OF ITEMS | SEATS PER ITEM | TOTAL |
|---|---|---|---|
| TABLE TOP, ROUND | 6 | 2 SEATS | 12 |
| TABLE TOP, ADA | 1 | 2 SEATS | 2 |
| SOFT SEATING | 3 | 1 SEAT | 3 |
| | | | |
| | | TOTAL | 17 |

## EGRESS CALCULATIONS

| | |
|---|---|
| EXIT WIDTH REQUIRED - 120 OCC. x 0.2 | = 24 IN. |
| EXIT WIDTH PROVIDED | = 44 IN. |
| EXITS | =36 IN. PRIMARY ENTRY, 60 IN. SECONDARY ENTRY, 42 IN WORKROOM |
| NUMBER OF EXITS REQUIRED | = 2 |
| NUMBER OF EXITS PROVIDED | = 2 + 1 IN WORKROOM |
| MAXIMUM. ALLOWABLE TRAVEL DISTANCE | = 200' - 0" |
| MAXIMUM. TRAVEL DISTANCE PROVIDED | = 46' - 10" |
| MINIMUM. EXIT SEPARATION | = 64' - 3" (MAXIMUM DIAGONAL) / 2 = 32' - 2" |
| EXIT SEPARATION PROVIDED | = 36' - 1" |

## PLUMBING FIXTURE CALCULATIONS

CHAPTER29-2018 IBC TABLE 2902.1

| OCCUPANCY | MALE | FEMALE | TOTAL |
|---|---|---|---|
| | 60 OCC. | 60 OCC. | 120 OCC. |

| FIXTURES | WATER CLOSETS | | URINALS* | LAVATORY | | WATER FOUNTAIN** |
|---|---|---|---|---|---|---|
| | 1 PER 75 | | | 1 PER 200 | | 1 PER 100 OR STATION |
| REQUIRED | 1 M | 1 F | 0 M | 1 M | 1 F | 0 |
| PROVIDED | 1 M | 1 F | 0 M | 1 M | 1 F | 0 |

*IN EACH BATHROOM OR TOILET ROOM, URINALS SHALL NOT BE SUBSTITUTED FOR MORE THAN 67% OF THE REQUIRED WATER CLOSETS IN ASSEMBLY OCCUPANCIES.

**RETAIL ESTABLISHMENT SERVES WATER UPON REQUEST.

## HEALTH DEPT. FINISH SCHEDULE

**BAR**
FLOOR: POLYVINYL FLOORING
WALL: WALL TILE, BACKSPLASH, WITH POLYVINYL BASE
CEILING: GYPSUM CEILING

**CAFE**
FLOOR: CERAMIC TILE
WALL: PAINTED GYPSUM WALL / WOOD PLANKS/
CEILING: ACOUSTICAL TILES / PAINTED GYPSUM CEILING

**WORKROOM**
FLOOR: POLYVINYL FLOORING
WALL: FRP WITH POLYVINYL BASE
CEILING: ACOUSTICAL CEILING TILE

**RESTROOM**
FLOOR: CERAMIC TILE
WALL: CERAMIC TILE
CEILING: PAINTED GYPSUM CEILING

## LEGEND

- TRAVEL DISTANCE
- BARRIER FREE PATH OF TRAVEL (MIN 3'-0" (915MM) - NO PINCH POINT)
- EMERGENCY LIGHT
- EXIT SIGN
- FIRE EXTINGUISHER
- ADA ACCESSIBLE SEATING 36" (915MM) X 48" (1220MM) CLEAR AREA

## HEALTH DEPT. PLAN NOTES

A. GENERAL CONTRACTOR TO SCHEDULE WITH REFRIGERATION CONTRACTOR TO CONDUCT INITIAL FOOD CASE START-UP AND TESTING. FOR APPROVED CONTRACTOR, CONTACT THE VENDOR.

B. THE SPACE IS SERVED BY THE MUNICIPAL WATER AND SEWER SYSTEM UNLESS OTHERWISE NOTED.

C. ALL EQUIPMENT AND INSTALLATION WILL MEET NATIONAL SANITATION FOUNDATION STANDARDS OR EQUIVALENT.

D. EQUIPMENT UNITS SHALL CONTAIN NO EXPOSED THREADS, EMBELLISHMENTS OR OVERHANGING EDGES THAT SERVE AS PLACES FOR ACCUMULATION OF DUST, DIRT AND DEBRIS

E. WARMING OVEN(S) SHOWN FOR PERMITTING PURPOSES. INSTALLATION AT STORE OPENING TO BE VERIFIED BY STARBUCKS CONSTRUCTION REPRESENTATIVE.

F. EACH HAND WASHING WILL HAVE A SINGLE SERVICE TOWEL AND SOAP DISPENSER AND ALL HAND SINKS TO HAVE A COMBINATION FAUCET OR PREMIXING FAUCET.

G. REFERENCE INTERIOR SCHEDULE SHEETS (I600 SERIES) FOR ADDITIONAL INFORMATION.

H. PROVIDE SNEEZE GUARDS WHERE REQUIRED BY JURISDICTION.

I. ALL FOOD STORAGE AND DISPLAY SHELVING SHALL BE A MINIMUM 6" (150MM) ABOVE FINISH FLOOR.

## KEYED NOTES

1. THRESHOLDS TO BE BARRIER FREE COMPLIANT PER ALL APPLICABLE CODES.
2. BARRIER-FREE PATH OF TRAVEL.
3. 30 INCH X 48" CLEAR FOR WHEELCHAIR ACCESS.
4. 60" (1525 MM) DIAMETER MINIMUM TURN RADIUS FOR WHEELCHAIR ACCESS.
5. 32" MINIMUM CLEAR AT RESTROOM DOOR.
6. SEE ENLARGED RESTROOM PLAN AND ELEVATIONS SHEET (I401) FOR ADDITIONAL INFORMATION ON ACCESSIBLE RESTROOM CLEARANCES.
7. POS TRANSACTION PLANE, CONDIMENT CART TOP AND HAND-OFF PLANE ARE 34 INCHES ABOVE THE FINISHED FLOOR FOR WHEELCHAIR ACCESSIBILITY.
8. PROVIDE BARRIER-FREE SIGNAGE AT ADA RESTROOMS PER ALL APPLICABLE CODES.
9. 36 INCH CLEAR FOR ELECTRICAL PANEL ACCESS.
10. 36 INCH CLEAR FOR ROOF LADDER ACCESS.
11. PROVIDE TACTILE "EXIT" SIGNAGE.

## ACCESSIBLE SEATING

**INTERIOR SEATING:**
47 SEATS X 5% = 3 ADA REQUIRED (3 PROVIDED)

**EXTERIOR SEATING:**
17 SEATS X 5% = 1 ADA REQUIRED (1 PROVIDED)

## MEANS OF EGRESS NOTES

A. EVERY ROOM OR SPACE THAT IS ASSEMBLY OCCUPANCY SHALL HAVE THE OCCUPANT LOAD OF THE ROOM OR SPACE POSTED IN A CONSPICUOUS PLACE, NEAR THE MAIN EXIT ACCESS DOORWAY. POSTED SIGNS SHALL BE OF AN APPROVED LEGIBLE PERMANENT DESIGN AND SHALL BE MAINTAINED BY THE OWNER AUTHORIZED AGENT.

B. EGRESS SHALL NOT PASS THROUGH KITCHENS, STORAGE ROOMS, CLOSETS OR SIMILAR SPACES.

C. PANIC AND FIRE EXIT HARDWARE, WHERE INSTALLED ON DOORS IN THIS BUILDING SHALL SATISFY THE FOLLOWING :

1) THE ACTUATION PORTION OF THE RELEASING DEVICE SHALL EXTEND AT LEAST ONE-HALF OF THE DOOR LEAF WIDTH.
2) THE MAXIMUM UNLATCHING FORCE DOES NOT EXCEED 15 POUNDS (6.8 KG).
3) PIVOTED OR BALANCED DOORS SHALL BE OF THE PUSH-PAD TYPE WHERE PANIC HARDWARE IS REQUIRED AND THE PAD SHALL NOT EXTEND ACROSS MORE THAN ONE-HALF OF THE DOOR WIDTH, MEASURED FROM THE LATCH SIDE.
4) PANIC HARDWARE LISTED IN ACCORDANCE WITH UL 305.
5) FIRE EXIT HARDWARE LISTED IN ACCORDANCE WITH UL 10C AND UL 305.

D. STRUCTURAL ELEMENTS, FIXTURES OR FURNISHINGS SHALL NOT PROJECT HORIZONTALLY FROM EITHER SIDE MORE THAN 4 INCHES (100 MM) OVER ANY WALKING SURFACE BETWEEN 27 INCHES (685 MM) AND 80 INCHES (2030 MM) ABOVE THE WALKING SURFACE.
EXCEPTION: HANDRAILS SERVING STAIRS AND RAMPS ARE PERMITTED TO PROTRUDE 4 1/2 INCHES (115 MM) FROM THE WALL.

E. THE PATH OF EGRESS TRAVEL EXITS AND WITHIN EXITS IN THIS BUILDING SHALL BE IDENTIFIED BY EXIT SIGNS CONFORMING TO THE REQUIREMENTS AS NOTED BELOW:

1) EXIT SIGNS SHALL BE READILY VISIBLE FROM ANY DIRECTION OF EGRESS TRAVEL.
2) EXIT SIGNS SHALL BE LOCATED AS NECESSARY TO CLEARLY INDICATE THE DIRECTION OF EGRESS TRAVEL.
3) NO POINT IN A CORRIDOR SHALL BE MORE THAN 100 FT (30.5 M) OR THE LISTED VIEWING DISTANCE FOR THE SIGN, WHICHEVER IS LESS, FROM THE NEAREST VISIBLE EXIT SIGN.

F. EXIT SIGNS SHALL BE INTERNALLY OR EXTERNALLY ILLUMINATED INTERNALLY ILLUMINATED EXIT SIGNS SHALL BE LISTED AND LABELED IN ACCORDANCE WITH UL 924 AND SHALL BE INSTALLED IN ACCORDANCE WITH THE MANUFACTURER'S INSTRUCTIONS. EXTERNALLY ILLUMINATED EXIT SIGNS SHALL COMPLY WITH THE GRAPHICS AND POWER SOURCE REQUIREMENTS. WHEN THE FACE OF AN EXIT SIGN IS ILLUMINATED FROM AN EXTERNAL SOURCE, IT SHALL HAVE AN INTENSITY OF NOT LESS THAN 5 FOOT CANDLES (54 LUX).

G. ANYTIME A BUILDING OR A PORTION OF A BUILDING IS OCCUPIED, THE MEANS OF EGRESS SERVING THE OCCUPIED PORTION SHALL BE ILLUMINATED AT AN INTENSITY OF NOT LESS THAN 1 FOOT CANDLE (11 LUX) AT THE WALKING SURFACE LEVEL.

H. THE POWER SUPPLY FOR MEANS OF EGRESS ILLUMINATION SHALL BE PROVIDED BY THE PREMISE'S ELECTRICAL SUPPLY. IN THE EVENT OF POWER SUPPLY FAILURE, ILLUMINATION SHALL BE AUTOMATICALLY PROVIDED FROM AN EMERGENCY SYSTEM FOR THE FOLLOWING AREAS:

1) AISLES AND UNENCLOSED EGRESS STAIRWAYS IN ROOMS AND SPACES THAT REQUIRE TWO OR MORE MEANS OF EGRESS.
2) CORRIDORS, INTERIOR EXIT STAIRWAYS & RAMPS AND EXIT PASSAGEWAYS IN BUILDINGS REQUIRED TO HAVE TWO OR MORE EXITS.
3) EXTERIOR EGRESS COMPONENTS AT OTHER THAN THE LEVEL OF EXIT DISCHARGE UNTIL EXIT DISCHARGE IS ACCOMPLISHED FOR BUILDINGS REQUIRED TO HAVE TWO OR MORE EXITS.
4) INTERIOR EXIT DISCHARGE ELEMENTS, IN BUILDINGS REQUIRED TO HAVE TWO OR MORE EXITS.
5) EXTERIOR LANDINGS, EXIT DISCHARGE DOORWAYS IN BUILDING REQUIRED TO HAVE TWO OR MORE EXITS.

I. THE EMERGENCY POWER SYSTEM SHALL ALSO BE CONNECTED TO AN EMERGENCY ELECTRICAL SYSTEM WHICH IS TO PROVIDE CONTINUED ILLUMINATION FOR A DURATION OF NOT LESS THAN 1 1/2 HOUR IN CASE OF PRIMARY POWER LOSS. CONTINUED ILLUMINATION IS TO BE PROVIDED FROM STORAGE BATTERIES, UNIT EQUIPMENT OR AN ON-SITE GENERATOR AND THE INSTALLATION OF THE EMERGENCY POWER SYSTEM.

J. EMERGENCY LIGHTING FACILITIES SHALL BE ARRANGED TO PROVIDE INITIAL ILLUMINATION THAT IS AT LEAST AN AVERAGE OF 1 FOOT CANDLE (11 LUX) AND A MINIMUM AT ANY POINT OF 0.1 FOOT CANDLE (1 LUX) MEASURED ALONG THE PATH OF EGRESS AT FLOOR LEVEL. A MAXIMUM TO MINIMUM ILLUMINATION UNIFORMITY RATION OF 40:1 SHALL NOT BE EXCEEDED.

K. WHERE KEY OPERATED LOCKING DEVICES ARE USED, POST A SIGN ON OR ADJACENT TO THE REQUIRED MAIN EXIT DOOR WITH 1 INCH (25 MM) LETTERING STATING THAT "THIS DOOR TO REMAIN UNLOCKED WHEN BUILDING IS OCCUPIED".

L. EGRESS DOORS OR GATES SHALL BE OPENABLE FROM THE EGRESS SIDE WITHOUT THE USE OF A KEY, SPECIAL KNOWLEDGE OR EFFORT. DOOR HANDLES, PULLS, LATCHES, LOCKS AND OTHER OPERATING DEVICES SHALL BE INSTALLED 34 INCHES (860 MM) TO 48 INCHES (1220 MM) ABOVE FINISHED FLOOR. MANUALLY OPERATED FLUSH BOLTS OR SURFACE BOLTS ARE NOT PERMITTED. THE UNLATCHING OF ANY DOOR OR LEAF SHALL NOT REQUIRE MORE THAN ONE OPERATION.

M. LANDINGS SHALL BE PROVIDED ON EACH SIDE OF DOORS AND SUCH LANDING SHALL BE AT THE SAME ELEVATION ON EACH SIDE OF THE DOOR LANDINGS SHALL HAVE A WIDTH NOT LESS THAN THE WIDTH OF THE DOOR AND LENGTH MEASURED IN THE DIRECTION OF TRAVEL OF NOT LESS THAN 44 INCHES (11120 MM).

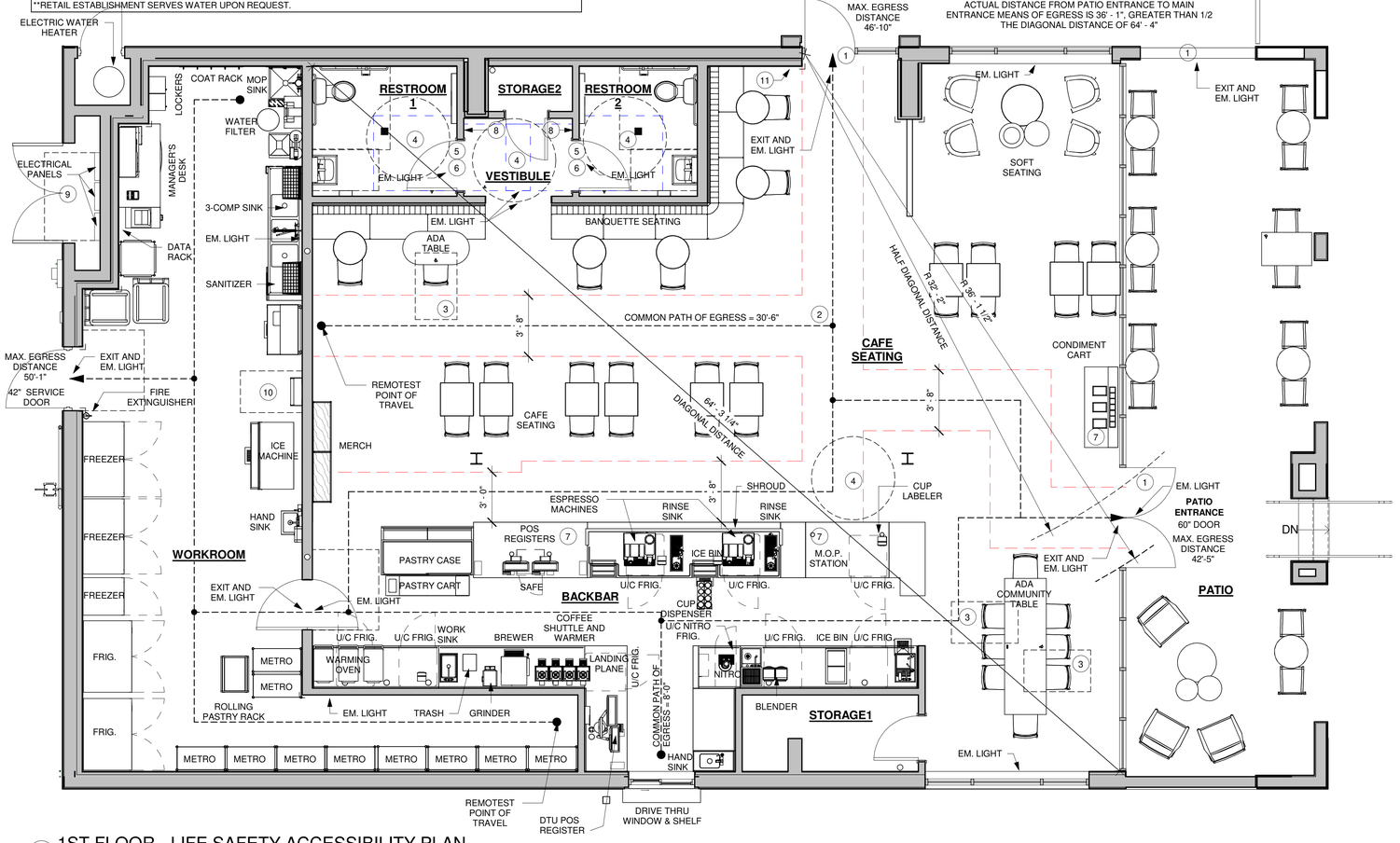


1 1ST FLOOR - LIFE SAFETY ACCESSIBILITY PLAN
Scale: 1/4" = 1'-0"

0 2' 4' 8'
Scale: 1/4" = 1'-0"

SCHEMATIC DESIGN ONLY - NOT INTENDED FOR CONSTRUCTION USE

© 2017 STARBUCKS COFFEE COMPANY

STARBUCKS®
2401 UTAH AVENUE SOUTH
SEATTLE, WASHINGTON 98134
(206) 318-1575

THESE DRAWINGS AND THE PROJECT MANUAL ARE CONFIDENTIAL AND SHALL REMAIN THE SOLE PROPERTY OF STARBUCKS CORPORATION, WHICH IS THE OWNER OF THE COPYRIGHT IN THIS WORK. THEY SHALL NOT BE REPRODUCED (IN WHOLE OR IN PART), SHARED WITH THIRD PARTIES OR USED IN ANY MANNER ON OTHER PROJECTS OR EXTENSIONS TO THIS PROJECT WITHOUT THE PRIOR WRITTEN CONSENT OF STARBUCKS CORPORATION. THESE DRAWINGS AND SPECIFICATIONS ARE INTENDED TO EXPRESS DESIGN INTENT FOR A PROTOTYPICAL STARBUCKS STORE (WHICH IS SUBJECT TO CHANGE AT ANYTIME) AND DO NOT REFLECT ACTUAL SITE CONDITIONS. NEITHER PARTY SHALL HAVE ANY OBLIGATION NOR LIABILITY TO THE OTHER (EXCEPT STATED ABOVE) UNTIL A WRITTEN AGREEMENT IS FULLY EXECUTED BY BOTH PARTIES.

STARBUCKS TEMPLATE VERSION i2020-04-20

**ARCHITECT OF RECORD**
ASOOSOCIATES
Soos & Associates, Inc.
105 Schelter Road
Lincolnshire, IL 60069
p: 847 821 7667

PROJECT NAME:
FOREST HILL BLVD & MILITARY TRL

PROJECT ADDRESS:
4380 Forest Hill Blvd
West Palm Beach, FL 33406

STORE #:
PROJECT #: 88231-001
ISSUE DATE: 03/24/2021
DESIGN MANAGER: IVETTE CARDENAS
PRODUCTION DESIGNER: SOOS
CHECKED BY:

**Revision Schedule**

| Rev | Date | By | Description |
|---|---|---|---|
| | | | |
| | | | |
| | | | |
| | | | |
| | | | |

SHEET TITLE:
LIFE SAFETY ACCCESSIBILITY PLAN
SCALE: AS SHOWN

SHEET NUMBER:
G003

3/24/2021 2:08:12 PM E:\Revit\88231-001_Forest Hill Blvd & Military Trail_CENTRAL2_cchone3.rvt

| EXTERIOR SIGNAGE SCHEDULE - "S" | | | | | | |
|---|---|---|---|---|---|---|
| **DESIGN ID** | **COUNT** | **DESCRIPTION** | **FURN. BY** | **INST. BY** | **BULB** | **COMMENTS** |
| SIGNAGE - DISK | | | | | | |
| 13164 | 1 | SIGN - DISK SF ILLUMINATED FLUSH MOUNTED EVOLVED - 60IN 1525MM | SB | GC | | |
| SIGNAGE - DRIVE THRU | | | | | | |
| 14091 | 1 | SIGN - DT THANK YOU / EXIT ONLY | SB | GC | | |
| 14106 | 1 | CLEARANCE BAR | SB | GC | | |
| 14327 | 5 | SIGN DT - DIRECTIONAL ILLUMINATED | SB | GC | | |
| 14533 | 2 | SIGN - DRIVE THRU ILLUMINATED ARROW SERIES FLUSH MOUNTED - RH - 62IN 1575MM | SB | GC | | |
| SIGNAGE - OTHER | | | | | | |
| 21163 | 1 | SIGN - MOBILE ORDER PICK UP ILLUMINATED BLADE MOUNT | | | | |
| 21297 | 9 | SIGN - 5 MINUTE PARKING | | | | POST, IF REQUIRED, PROVIDED BY OTHERS |
| SIGNAGE - WORDMARK | | | | | | |
| 18507 | 2 | SIGN - WORDMARK STARBUCKS ON RACEWAY - 20IN 510MM | SB | GC | | WITH GREEN FACE |

| EXTERIOR FINISH SCHEDULE | | | | | |
|---|---|---|---|---|---|
| MARK | MATERIAL | FINISH | COLOR | PRODUCT | COMMENTS |
| AL-1 | ALUMINUM STOREFRONT | | MATCH EXISTING | | |
| ST-1 | STUCCO | | SW6991 BLACK MAGIC | | |
| PT-1 | PAINT | | SW6991 BLACK MAGIC | SHERWIN WILLIAMS | |
| PT-2 | PAINT | | SW7030 ANEW GRAY | SHERWIN WILLIAMS | |
| PT-3 | PAINT | | SW7504 KEYSTONE GRAY | SHERWIN WILLIAMS | |
| CP-1 | METAL CANOPY | | BLACK | | |
| MT-1 | METAL PANEL | | BLACK | | |
| | | | | | |

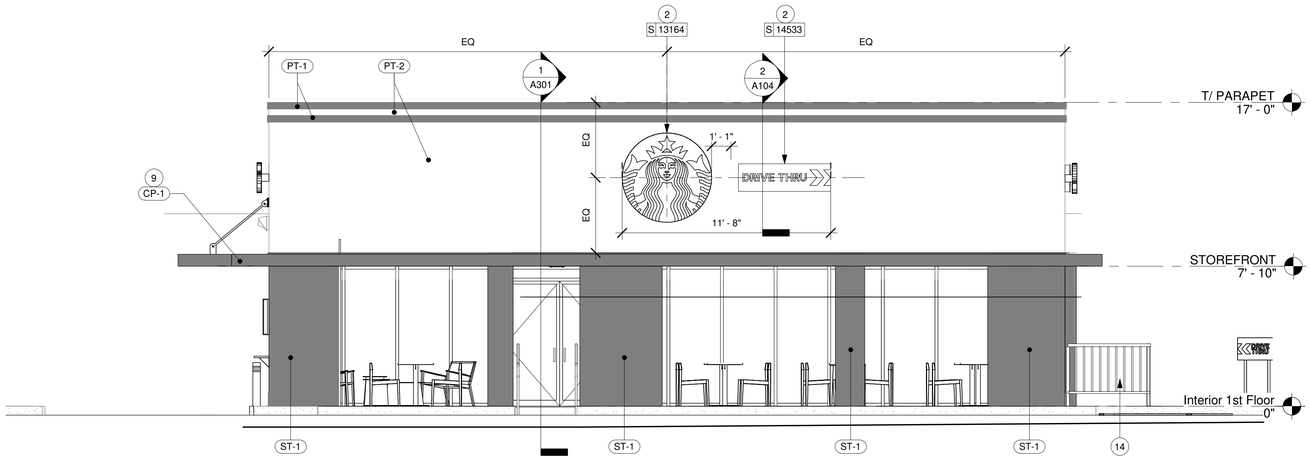


1 NORTH ELEVATION
Scale: 1/4" = 1'-0"

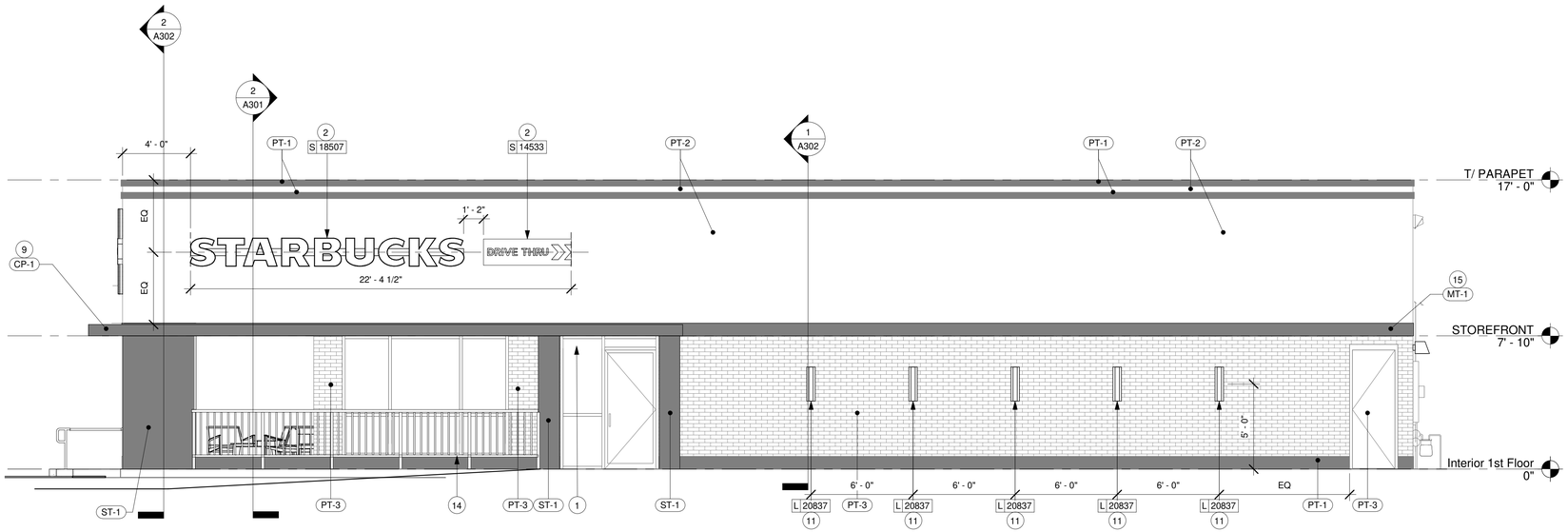


2 WEST ELEVATION
Scale: 1/4" = 1'-0"

## KEYED NOTES

1. STORE ADDRESS. PROVIDE 3" (76MM) HIGH BLACK ACRYLIC STORE ADDRESS ON GLAZING ABOVE MAIN ENTRY DOORS. OR PER LOCAL JURISDICTIONAL CODE REQUIREMENTS.
2. PROVIDE J-BOX FOR BUILDING SIGNAGE. COORDINATE LOCATION WITH SIGNAGE VENDOR SHOP DRAWINGS. PROVIDE SIGNAGE DISCONNECT ON INSIDE FACE OF WALL.
   3/4" MARINE GRADE PLYWOOD BLOCKING FOR EXTERIOR SIGNAGE. EXTEND BLOCKING 8" (205MM) MIN. BEYOND EDGE OF SIGNAGE.
3. NON-ILLUMINATED PROTECTIVE BOLLARD.
4. EXISTING ELECTRICAL METER.
5. EXISTING SERVICE DOOR.
6. FURNISH AND INSTALL SECURITY LIGHT ABOVE ENTRY DOOR.
7. DT WINDOW. PROVIDE READY ACCESS DT SERVICE WINDOW. WINDOW TO MATCH ADJACENT STOREFRONT.
8. DT WINDOW SHELF. INSTALL SERVICE WINDOW SHELF AT 36" (915MM) INSIDE.
9. CANOPY. SEE BUILDING DETAIL SHEETS AND STRUCTURAL DRAWINGS.
10. EXISTING ROOF SCUPPER .
11. EXTERIOR SCONCE LIGHTING.
12. LOCKABLE HOSE BIB. SEE PLUMBING DRAWINGS.
13. EXISTING GAS METER. SEE PLUMBING SHEETS FOR ADDITIONAL INFORMATION.
14. GUARDRAIL
15. METAL BAND

## GENERAL NOTES

A. GENERAL CONTRACTOR TO COORDINATE AND SCHEDULE SIGNAGE INSTALLATION WITH THE SIGNAGE CONTRACTOR PROVIDING A MINIMUM SCHEDULING NOTICE OF 4 WEEKS AND 1 WEEK PRIOR TO SCHEDULED DATE OF INSTALLATION. CONSTRUCTION MANAGER TO PROVIDE GENERAL CONTRACTOR WITH SIGNAGE CONTRACTOR CONTACT INFORMATION.

B. GENERAL CONTRACTOR SHALL COORDINATE WITH ELECTRICAL CONTRACTOR TO FURNISH AND INSTALL ELECTRICAL CIRCUITS INCLUDING ALL CONDUIT, WIRE, CONNECTIONS AND BREAKER AT PANEL BOARD NECESSARY TO SERVE SIGNAGE.

C. GENERAL CONTRACTOR TO PROVIDE FIRE TREATED WOOD STUD BLOCKING OR EQUIVALENT TO SUPPORT SIGNAGE.

D. SIGNAGE CONTRACTOR SHALL VERIFY SIZE AND LOCATION OF ANY AND ALL ALLOWABLE MONUMENT OR POLE SIGNAGE AND PROVIDE SHOP DRAWING(S) PRIOR TO FABRICATION TO THE STARBUCKS DESIGNER FOR APPROVAL.

E. SIGNAGE CONTRACTOR TO INSTALL SIGNAGE IN COMPLIANCE WITH LOCAL CODES AND OBTAIN PERMIT.

F. SIGNAGE CONTRACTOR TO SUPPLY SHOP DRAWINGS TO CONSTRUCTION MANAGER AND TO THE GENERAL CONTRACTOR AS NEEDED. GENERAL CONTRACTOR TO NOTIFY CONSTRUCTION MANAGER IMMEDIATELY IF SHOP DRAWINGS OR INSTALLATION IS IN DISCREPANCY WITH ARCHITECTURAL DRAWINGS.

G. GENERAL CONTRACTOR TO CLEAN, PATCH AND REPAIR EXISTING EXTERIOR AS REQUIRED.

SIGNAGE SHOWN FOR REFERENCE ONLY. SIGNAGE APPROVALS SHALL BE ACQUIRED UNDER SEPARATE SIGN PERMIT SUBMITTALS. SIGNAGE IS NOT INCLUDED IN THE SCOPE OF THIS BUILDING PERMIT.

SCHEMATIC DESIGN ONLY - NOT INTENDED FOR CONSTRUCTION USE

PROJECT NAME:
FOREST HILL BLVD & MILITARY TRL

PROJECT ADDRESS:
4380 Forest Hill Blvd
West Palm Beach, FL 33406

© 2017 STARBUCKS COFFEE COMPANY

**STARBUCKS®**
2401 UTAH AVENUE SOUTH
SEATTLE, WASHINGTON 98134
(206) 318-1575

THESE DRAWINGS AND THE PROJECT MANUAL ARE CONFIDENTIAL AND SHALL REMAIN THE SOLE PROPERTY OF STARBUCKS CORPORATION, WHICH IS THE OWNER OF THE COPYRIGHT IN THIS WORK. THEY SHALL NOT BE REPRODUCED (IN WHOLE OR IN PART), SHARED WITH THIRD PARTIES OR USED IN ANY MANNER ON OTHER PROJECTS OR EXTENSIONS TO THIS PROJECT WITHOUT THE PRIOR WRITTEN CONSENT OF STARBUCKS CORPORATION. THESE DRAWINGS AND SPECIFICATIONS ARE INTENDED TO EXPRESS DESIGN INTENT FOR A PROTOTYPICAL STARBUCKS STORE (WHICH IS SUBJECT TO CHANGE AT ANYTIME) AND DO NOT REFLECT ACTUAL SITE CONDITIONS. NEITHER PARTY SHALL HAVE ANY OBLIGATION NOR LIABILITY TO THE OTHER (EXCEPT STATED ABOVE) UNTIL A WRITTEN AGREEMENT IS FULLY EXECUTED BY BOTH PARTIES.

STARBUCKS TEMPLATE VERSION i2020-04-20

**ARCHITECT OF RECORD**

ASOOSOCIATES
Soos & Associates, Inc.
105 Schelter Road
Lincolnshire, IL 60069
p: 847 821 7667

STORE #:
PROJECT #: 88231-001
ISSUE DATE: 03/24/2021
DESIGN MANAGER: IVETTE CARDENAS
PRODUCTION DESIGNER: SOOS
CHECKED BY:

**Revision Schedule**

| Rev | Date | By | Description |
|---|---|---|---|
| | | | |

SHEET TITLE:
BUILDING EXTERIOR ELEVATIONS
SCALE: AS SHOWN

SHEET NUMBER:
A201

3/24/2021 2:14:52 PM E:\Revit\88231-001_Forest Hill Blvd & Military Trail_CENTRAL2_cchone3.rvt

**EXTERIOR SIGNAGE SCHEDULE - "S"**

| DESIGN ID | COUNT | DESCRIPTION | FURN. BY | INST. BY | BULB | COMMENTS |
|---|---|---|---|---|---|---|
| SIGNAGE - DISK | | | | | | |
| 13164 | 1 | SIGN - DISK SF ILLUMINATED FLUSH MOUNTED EVOLVED - 60IN 1525MM | SB | GC | | |
| SIGNAGE - DRIVE THRU | | | | | | |
| 14091 | 1 | SIGN - DT THANK YOU / EXIT ONLY | SB | GC | | |
| 14106 | 1 | CLEARANCE BAR | SB | GC | | |
| 14327 | 5 | SIGN DT - DIRECTIONAL ILLUMINATED | SB | GC | | |
| 14533 | 2 | SIGN - DRIVE THRU ILLUMINATED ARROW SERIES FLUSH MOUNTED - RH - 62IN 1575MM | SB | GC | | |
| SIGNAGE - OTHER | | | | | | |
| 21163 | 1 | SIGN - MOBILE ORDER PICK UP ILLUMINATED BLADE MOUNT | | | | |
| 21297 | 9 | SIGN - 5 MINUTE PARKING | | | | POST, IF REQUIRED, PROVIDED BY OTHERS |
| SIGNAGE - WORDMARK | | | | | | |
| 18507 | 2 | SIGN - WORDMARK STARBUCKS ON RACEWAY - 20IN 510MM | SB | GC | | WITH GREEN FACE |

**EXTERIOR FINISH SCHEDULE**

| MARK | MATERIAL | FINISH | COLOR | PRODUCT | COMMENTS |
|---|---|---|---|---|---|
| AL-1 | ALUMINUM STOREFRONT | | MATCH EXISTING | | |
| ST-1 | STUCCO | | SW6991 BLACK MAGIC | | |
| PT-1 | PAINT | | SW6991 BLACK MAGIC | SHERWIN WILLIAMS | |
| PT-2 | PAINT | | SW7030 ANEW GRAY | SHERWIN WILLIAMS | |
| PT-3 | PAINT | | SW7504 KEYSTONE GRAY | SHERWIN WILLIAMS | |
| CP-1 | METAL CANOPY | | BLACK | | |
| MT-1 | METAL PANEL | | BLACK | | |
| | | | | | |

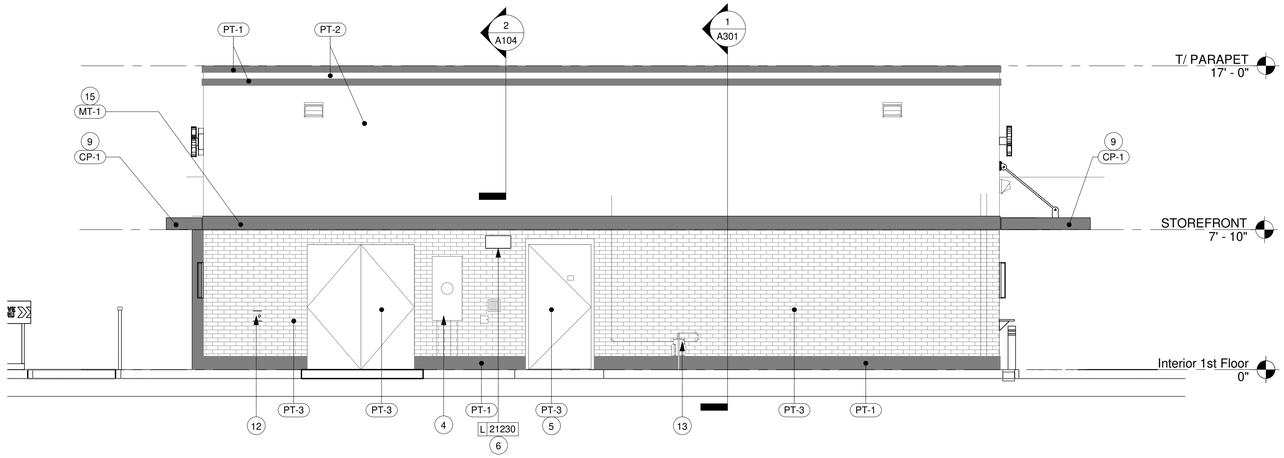


1 SOUTH ELEVATION
Scale: 1/4" = 1'-0"

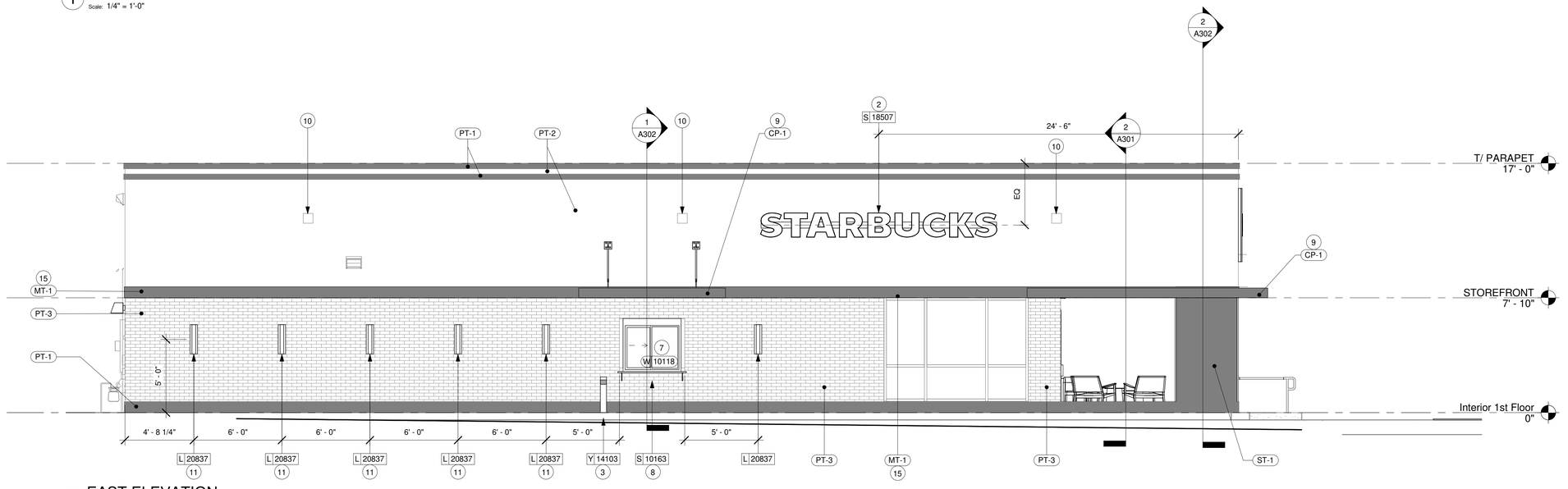


2 EAST ELEVATION
Scale: 1/4" = 1'-0"

## KEYED NOTES (#)

1. STORE ADDRESS. PROVIDE 3" (76MM) HIGH BLACK ACRYLIC STORE ADDRESS ON GLAZING ABOVE MAIN ENTRY DOORS. OR PER LOCAL JURISDICTIONAL CODE REQUIREMENTS.
2. PROVIDE J-BOX FOR BUILDING SIGNAGE. COORDINATE LOCATION WITH SIGNAGE VENDOR SHOP DRAWINGS. PROVIDE SIGNAGE DISCONNECT ON INSIDE FACE OF WALL.
   3/4" MARINE GRADE PLYWOOD BLOCKING FOR EXTERIOR SIGNAGE. EXTEND BLOCKING 8" (205MM) MIN. BEYOND EDGE OF SIGNAGE.
3. NON-ILLUMINATED PROTECTIVE BOLLARD.
4. EXISTING ELECTRICAL METER.
5. EXISTING SERVICE DOOR.
6. FURNISH AND INSTALL SECURITY LIGHT ABOVE ENTRY DOOR.
7. DT WINDOW. PROVIDE READY ACCESS DT SERVICE WINDOW. WINDOW TO MATCH ADJACENT STOREFRONT.
8. DT WINDOW SHELF. INSTALL SERVICE WINDOW SHELF AT 36" (915MM) INSIDE.
9. CANOPY. SEE BUILDING DETAIL SHEETS AND STRUCTURAL DRAWINGS.
10. EXISTING ROOF SCUPPER .
11. EXTERIOR SCONCE LIGHTING.
12. LOCKABLE HOSE BIB. SEE PLUMBING DRAWINGS.
13. EXISTING GAS METER. SEE PLUMBING SHEETS FOR ADDITIONAL INFORMATION.
14. GUARDRAIL
15. METAL BAND

## GENERAL NOTES

A. GENERAL CONTRACTOR TO COORDINATE AND SCHEDULE SIGNAGE INSTALLATION WITH THE SIGNAGE CONTRACTOR PROVIDING A MINIMUM SCHEDULING NOTICE OF 4 WEEKS AND 1 WEEK PRIOR TO SCHEDULED DATE OF INSTALLATION. CONSTRUCTION MANAGER TO PROVIDE GENERAL CONTRACTOR WITH SIGNAGE CONTRACTOR CONTACT INFORMATION.

B. GENERAL CONTRACTOR SHALL COORDINATE WITH ELECTRICAL CONTRACTOR TO FURNISH AND INSTALL ELECTRICAL CIRCUITS INCLUDING ALL CONDUIT, WIRE, CONNECTIONS AND BREAKER AT PANEL BOARD NECESSARY TO SERVE SIGNAGE.

C. GENERAL CONTRACTOR TO PROVIDE FIRE TREATED WOOD STUD BLOCKING OR EQUIVALENT TO SUPPORT SIGNAGE.

D. SIGNAGE CONTRACTOR SHALL VERIFY SIZE AND LOCATION OF ANY AND ALL ALLOWABLE MONUMENT OR POLE SIGNAGE AND PROVIDE SHOP DRAWING(S) PRIOR TO FABRICATION TO THE STARBUCKS DESIGNER FOR APPROVAL.

E. SIGNAGE CONTRACTOR TO INSTALL SIGNAGE IN COMPLIANCE WITH LOCAL CODES AND OBTAIN PERMIT.

F. SIGNAGE CONTRACTOR TO SUPPLY SHOP DRAWINGS TO CONSTRUCTION MANAGER AND TO THE GENERAL CONTRACTOR AS NEEDED. GENERAL CONTRACTOR TO NOTIFY CONSTRUCTION MANAGER IMMEDIATELY IF SHOP DRAWINGS OR INSTALLATION IS IN DISCREPANCY WITH ARCHITECTURAL DRAWINGS.

G. GENERAL CONTRACTOR TO CLEAN, PATCH AND REPAIR EXISTING EXTERIOR AS REQUIRED.

SIGNAGE SHOWN FOR REFERENCE ONLY. SIGNAGE APPROVALS SHALL BE ACQUIRED UNDER SEPARATE SIGN PERMIT SUBMITTALS. SIGNAGE IS NOT INCLUDED IN THE SCOPE OF THIS BUILDING PERMIT.

SCHEMATIC DESIGN ONLY - NOT INTENDED FOR CONSTRUCTION USE

© 2017 STARBUCKS COFFEE COMPANY

**STARBUCKS®**
2401 UTAH AVENUE SOUTH
SEATTLE, WASHINGTON 98134
(206) 318-1575

THESE DRAWINGS AND THE PROJECT MANUAL ARE CONFIDENTIAL AND SHALL REMAIN THE SOLE PROPERTY OF STARBUCKS CORPORATION, WHICH IS THE OWNER OF THE COPYRIGHT IN THIS WORK. THEY SHALL NOT BE REPRODUCED (IN WHOLE OR IN PART), SHARED WITH THIRD PARTIES OR USED IN ANY MANNER ON OTHER PROJECTS OR EXTENSIONS TO THIS PROJECT WITHOUT THE PRIOR WRITTEN CONSENT OF STARBUCKS CORPORATION. THESE DRAWINGS AND SPECIFICATIONS ARE INTENDED TO EXPRESS DESIGN INTENT FOR A PROTOTYPICAL STARBUCKS STORE (WHICH IS SUBJECT TO CHANGE AT ANYTIME) AND DO NOT REFLECT ACTUAL SITE CONDITIONS. NEITHER PARTY SHALL HAVE ANY OBLIGATION NOR LIABILITY TO THE OTHER (EXCEPT STATED ABOVE) UNTIL A WRITTEN AGREEMENT IS FULLY EXECUTED BY BOTH PARTIES.

STARBUCKS TEMPLATE VERSION i2020-04-20

**ARCHITECT OF RECORD**
ASOOSOCIATES
Soos & Associates, Inc.
105 Schelter Road
Lincolnshire, IL 60069
p: 847 821 7667

PROJECT NAME:
FOREST HILL BLVD & MILITARY TRL

PROJECT ADDRESS:
4380 Forest Hill Blvd
West Palm Beach, FL 33406

STORE #:
PROJECT #: 88231-001
ISSUE DATE: 03/24/2021
DESIGN MANAGER: IVETTE CARDENAS
PRODUCTION DESIGNER: SOOS
CHECKED BY:

**Revision Schedule**

| Rev | Date | By | Description |
|---|---|---|---|
| | | | |
| | | | |
| | | | |
| | | | |
| | | | |

SHEET TITLE:
BUILDING EXTERIOR ELEVATIONS
SCALE: AS SHOWN

SHEET NUMBER:
A202

3/24/2021 1:46:55 PM E:\Revit\88231-001_Forest Hill Blvd & Military Trail_CENTRAL2_cchone3.rvt

# TRAFFIC CIRCULATION PLAN

**Sunshine811**

Call 811 or visit sunshine811.com two full business days before digging to have buried facilities located and marked.

*Check positive response codes before you dig!*

SCALE: 1" = 20'

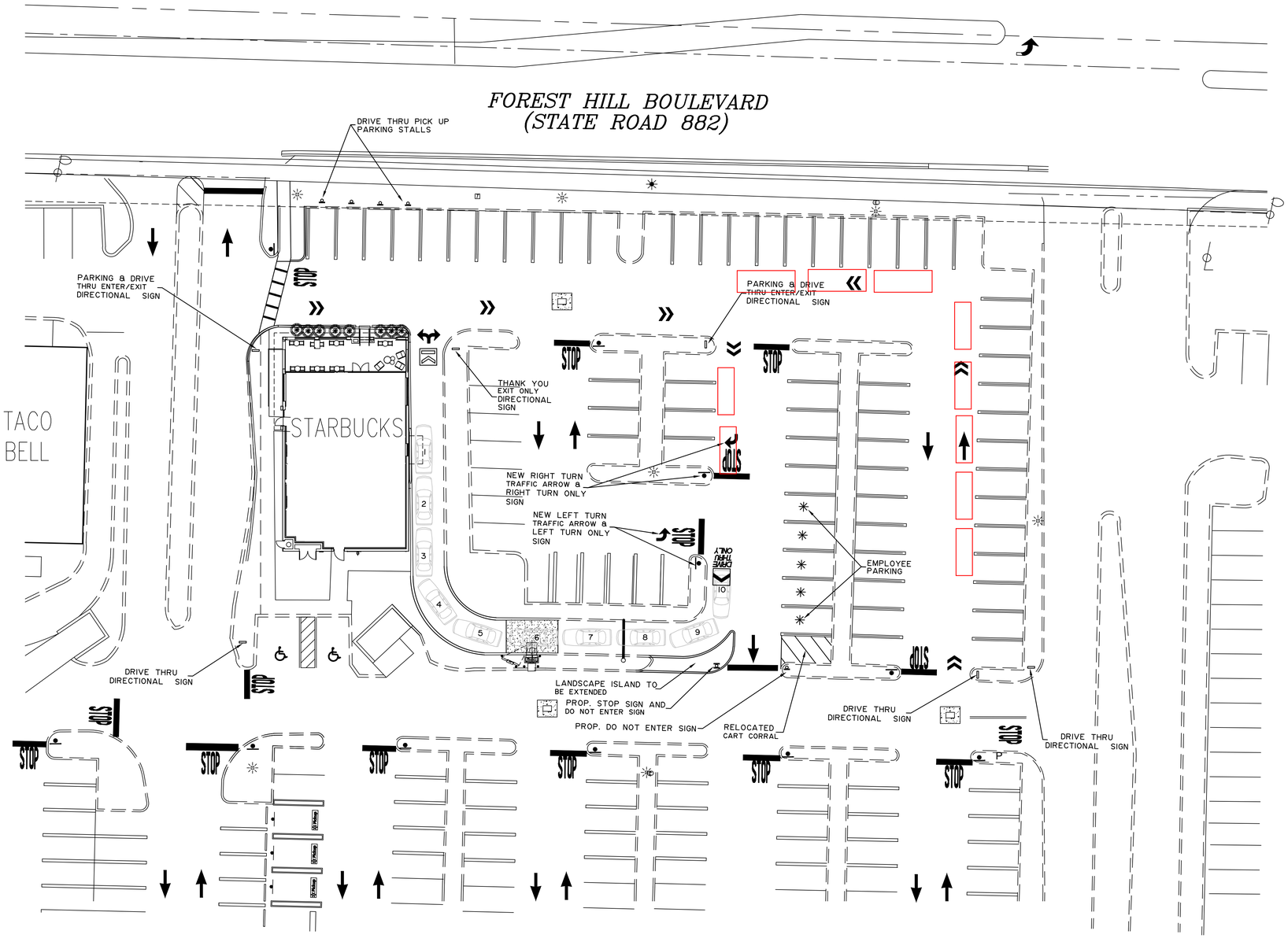


## LEGEND

- EXISTING PAVEMENT
- PROPOSED PAVEMENT
- 19.10 EXISTING ELEVATION
- 10.9 PROPOSED ELEVATION
- PROPOSED CONCRETE
- PROPOSED ASPHALT PAVEMENT
- RUN OFF DIRECTION
- EXIST. TYPE "F" CURB & GUTTER
- PROP. TYPE "F" CURB & GUTTER
- (1) DRAINAGE STRUCTURE NUMBER

PROJECT No. 2020-69 DATE: 12/10/2020


**ZAMORA & ASSOCIATES, INC.**
ENGINEERING LAND PLANNING
11410 N. KENDALL DRIVE SUITE 302 MIAMI, FLORIDA 33176
(305) 273-7801 FAX (305) 273-9514



©2011 STARBUCKS COFFEE COMPANY



STARBUCKS COFFEE COMPANY
2401 UTAH AVENUE SOUTH
SEATTLE, WASHINGTON 98134
(206) 318-1575



THESE DRAWINGS AND SPECIFICATIONS ARE CONFIDENTIAL AND SHALL REMAIN THE SOLE PROPERTY OF STARBUCKS CORPORATION, WHICH IS THE OWNER OF THE COPYRIGHT IN THIS WORK. THEY SHALL NOT BE REPRODUCED (IN WHOLE OR IN PART), SHARED WITH THIRD PARTIES OR USED IN ANY MANNER ON OTHER PROJECTS OR EXTENSIONS TO THIS PROJECT WITHOUT THE PRIOR WRITTEN CONSENT OF STARBUCKS CORPORATION. THESE DRAWINGS AND SPECIFICATIONS ARE INTENDED TO EXPRESS DESIGN INTENT FOR A PROTOTYPICAL STARBUCKS STORE (WHICH IS SUBJECT TO CHANGE AT ANYTIME) AND DO NOT REFLECT ACTUAL SITE CONDITIONS. NEITHER PARTY SHALL HAVE ANY OBLIGATION NOR LIABILITY TO THE OTHER (EXCEPT STATED ABOVE) UNTIL A WRITTEN AGREEMENT IS FULLY EXECUTED BY BOTH PARTIES.


PROJECT NAME: STARBUCKS

PROJECT ADDRESS: 4380 Forest Hill Boulevard Village of Palm Springs, Florida

SEAL / SIGNATURE

GERARDO ZAMORA P.E.
CIVIL ENGINEER
P.E. No. 44207
E.B. 0006791
STATE OF FLORIDA

GERARDO ZAMORA LICENSE No. 44207 STATE OF FLORIDA PROFESSIONAL ENGINEER

2/23/2021

THIS ITEM HAS BEEN DIGITALLY SIGNED AND SEALED BY GERARDO ZAMORA JR P.E. ON THE DATE ADJACENT TO THE SEAL.
PRINTED COPIES OF THIS DOCUMENT ARE NOT CONSIDERED SIGNED & SEALED AND THE SIGNATURE MUST BE VERIFIED ON ANY ELECTRONIC COPIES.

STORE #:

PROJECT #:

CONCEPT:

ISSUE DATE: *12/10/2020*

DESIGN MANAGER:

LEED AP:

PRODUCTION DESIGNER:

CHECKED BY:

SHEET TITLE: *TRAFFIC CIRCULATION PLAN*

SCALE: *1 = 20'*

SHEET NUMBER: **C-1A**

4380 Forest Hills Blvd
West Palm Beach, FL

SO Number 112377
Created 01.27.2021
Revised

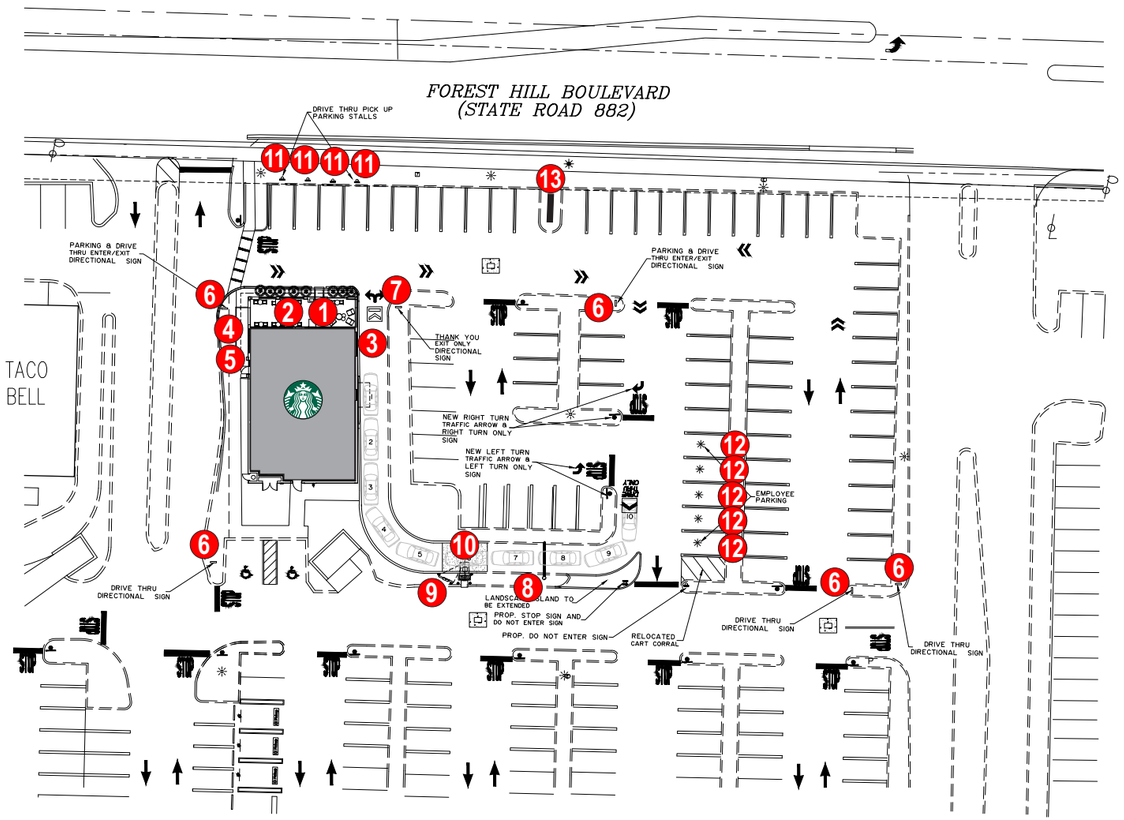


**SITE PLAN**
Not to Scale






1 2 North Elevation - Siren Logo w/ DT Wall Sign

8 Drive Thru Clearance Sign

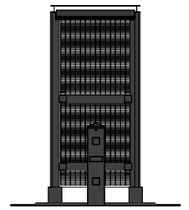

9 Canopy with Speaker Post

3 East Elevation - Channel Letters

4 5 West Elevation - Channel Letters w/ DT Wall Sign

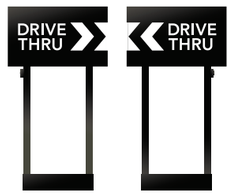


6 Directional Signs




7 Directional Sign




13 Monument Sign

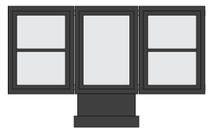

10 5-Panel Menu Board




11 Parking Signs




12 Parking Signs

atlas BRANDING THE WORLD
National Headquarters: 1077 West Blue Heron Blvd.
West Palm Beach, Florida 33404
800.772.7932
www.atlasbtw.com

| Revisions: | |
|---|---|
| ... | ... |
| ... | ... |
| ... | ... |
| ... | ... |
| ... | ... |

SP

| | |
|---|---|
| PM: Mark B | Address: 4380 Forest Hills Blvd |
| Drawn By: TD | City State: West Palm Beach, FL |
| Date: 1/27/2021 | Drawing Number: 112377-SP |

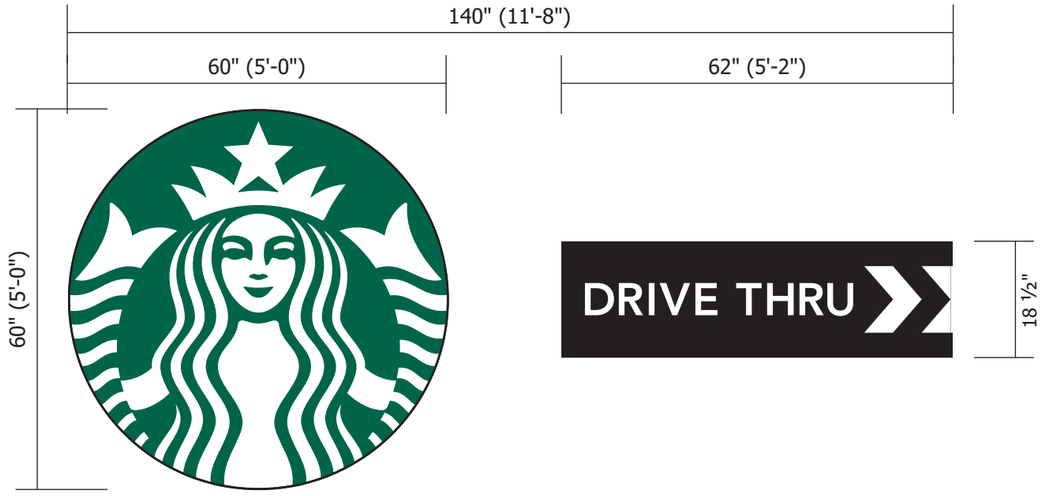


Scale: 1/2" = 1'-0"

**SQUARE FOOTAGE:**
Existing Boston Market Sign = 63 Sq Ft

Proposed: DT Wall Sign = 7.96 Sq Ft
Siren Logo = 19.64 Sq Ft
27.6 Sq Ft

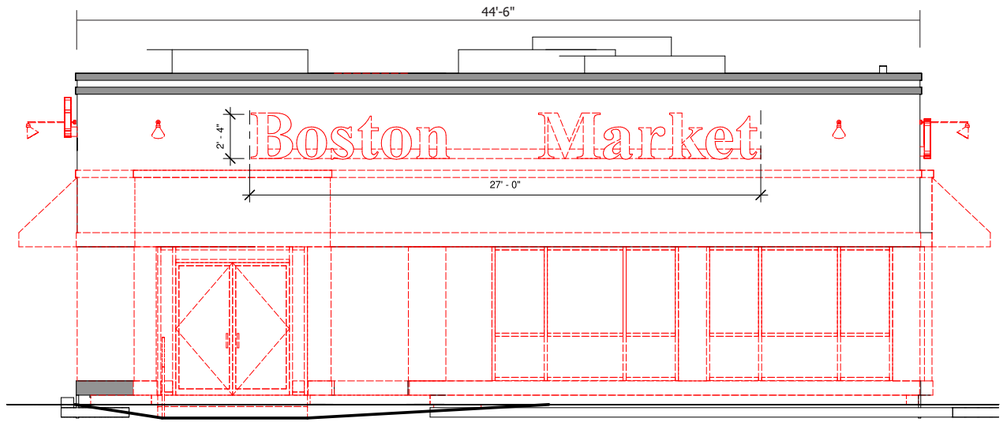


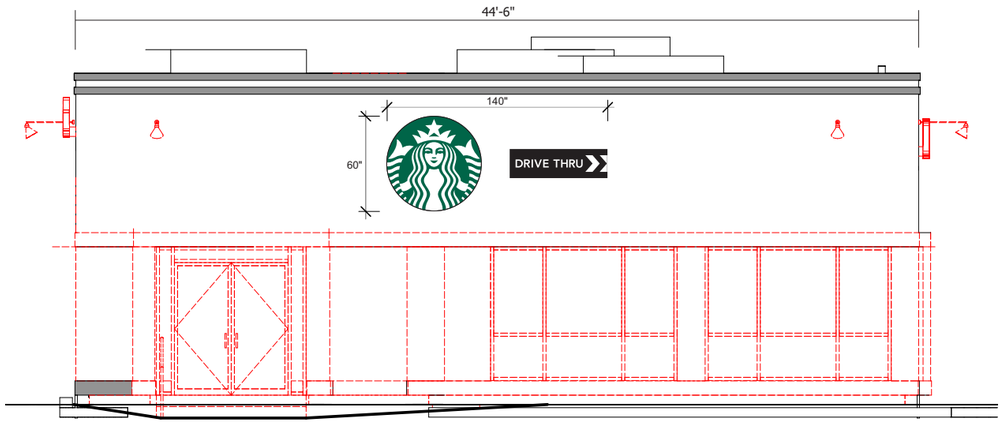


1 SITE SURVEY - NORTH ELEVATION
Scale: 1/8" = 1'-0"

atlas BRANDING THE WORLD
National Headquarters: 1077 West Blue Heron Blvd.
West Palm Beach, Florida 33404
800.772.7932
www.atlasbtw.com

| Revisions: | |
|---|---|
| ... | ... |
| ... | ... |
| ... | ... |
| ... | ... |
| ... | ... |

S01-2

| | |
|---|---|
| PM: Mark B | Address: 4380 Forest Hills Blvd |
| Drawn By: TD | City State: West Palm Beach, FL |
| Date: 1/27/2021 | Drawing Number: 112377-S01-2 |

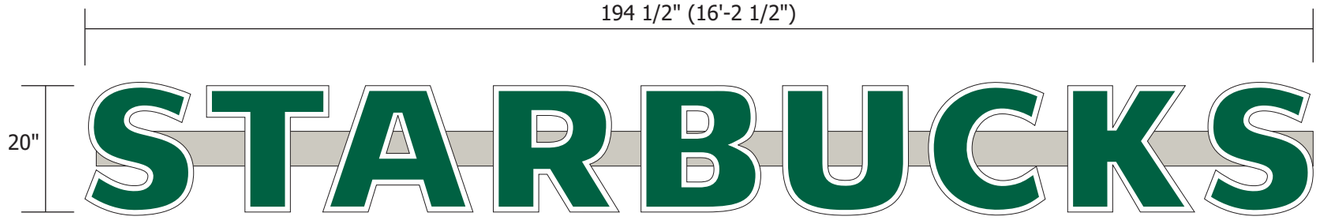


Scale: 1/2" = 1'-0"

**SQUARE FOOTAGE:**
Existing Boston Market Sign = 42 Sq Ft

Proposed: Channel Letters = 26.84 Sq Ft

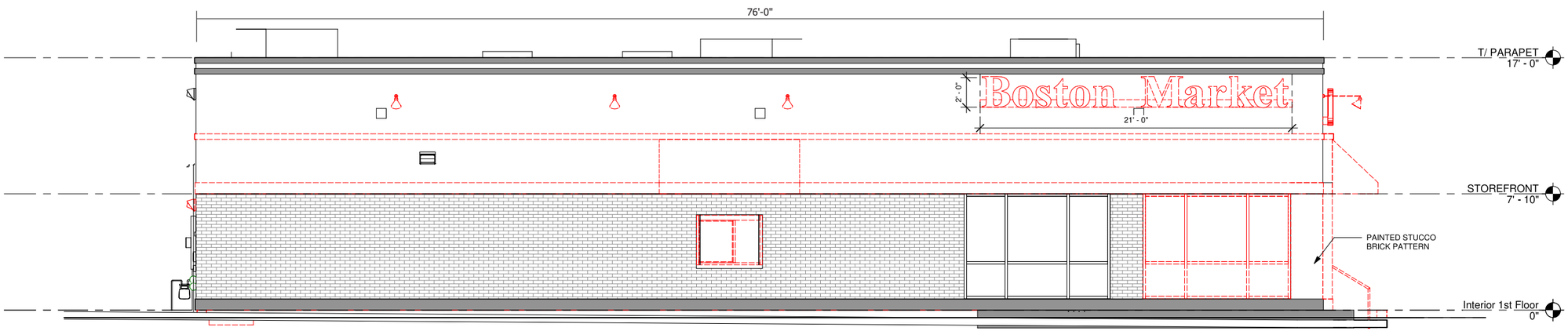


3 SITE SURVEY - EAST ELEVATION
Scale: 1/8" = 1'-0"

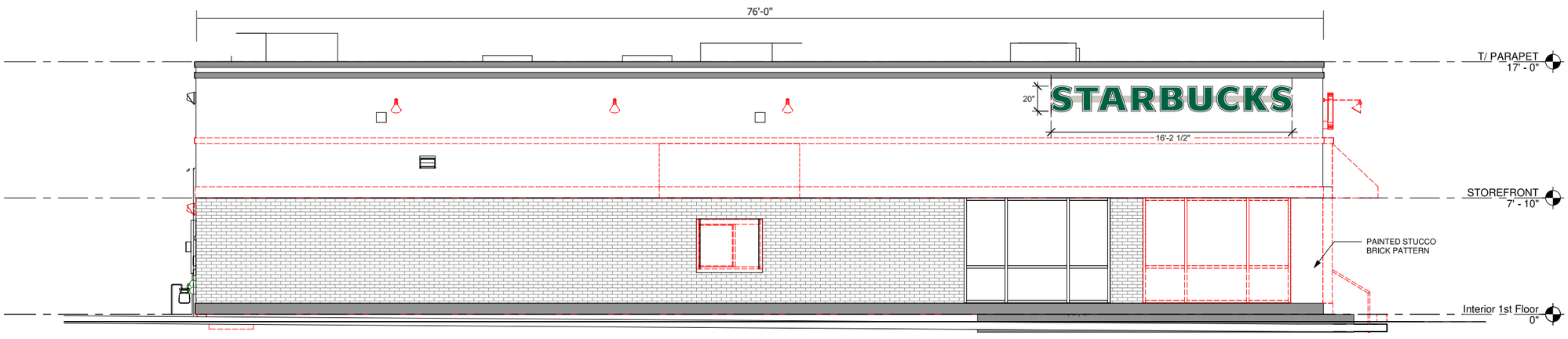


atlas BRANDING THE WORLD
National Headquarters: 1077 West Blue Heron Blvd.
West Palm Beach, Florida 33404
800.772.7932
www.atlasbtw.com

| Revisions: | |
|---|---|
| ... | ... |
| ... | ... |
| ... | ... |
| ... | ... |
| ... | ... |

S03

| | |
|---|---|
| PM: Mark B | Address: 4380 Forest Hills Blvd |
| Drawn By: TD | City State: West Palm Beach, FL |
| Date: 1/27/2021 | Drawing Number: 112377-S03 |

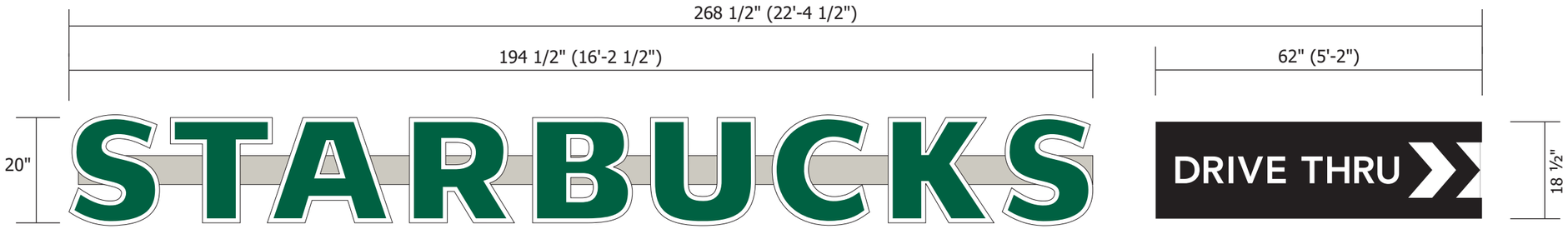


Scale: 1/2" = 1'-0"

**SQUARE FOOTAGE:**
Existing Boston Market Sign = 42 Sq Ft

Proposed: Channel Letters = 26.84 Sq Ft
Siren Logo = 7.96 Sq Ft
34.8 Sq Ft

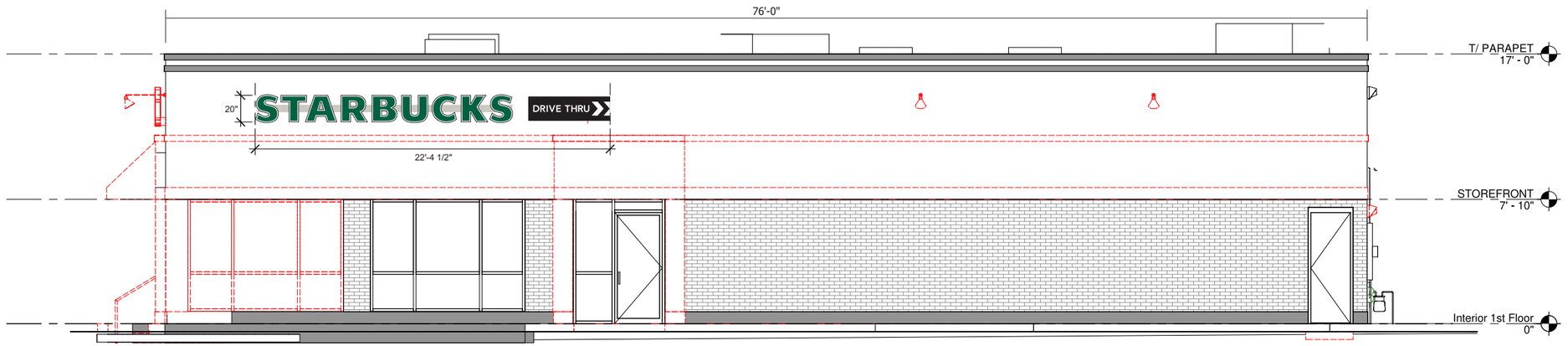


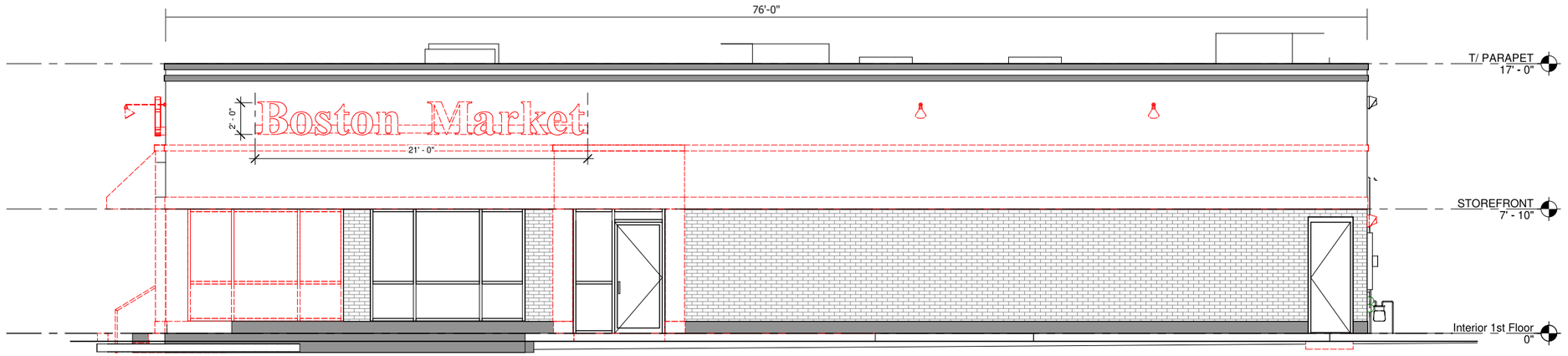


4 SITE SURVEY - WEST ELEVATION
Scale: 1/8" = 1'-0"

atlas BRANDING THE WORLD

National Headquarters: 1077 West Blue Heron Blvd.
West Palm Beach, Florida 33404
800.772.7932
www.atlasbtw.com

| Revisions: | |
|---|---|
| ... | ... |
| ... | ... |
| ... | ... |
| ... | ... |
| ... | ... |

S04-5

| | |
|---|---|
| PM: Mark B | Address: 4380 Forest Hills Blvd |
| Drawn By: TD | City State: West Palm Beach, FL |
| Date: 1/27/2021 | Drawing Number: 112377-S04-5 |

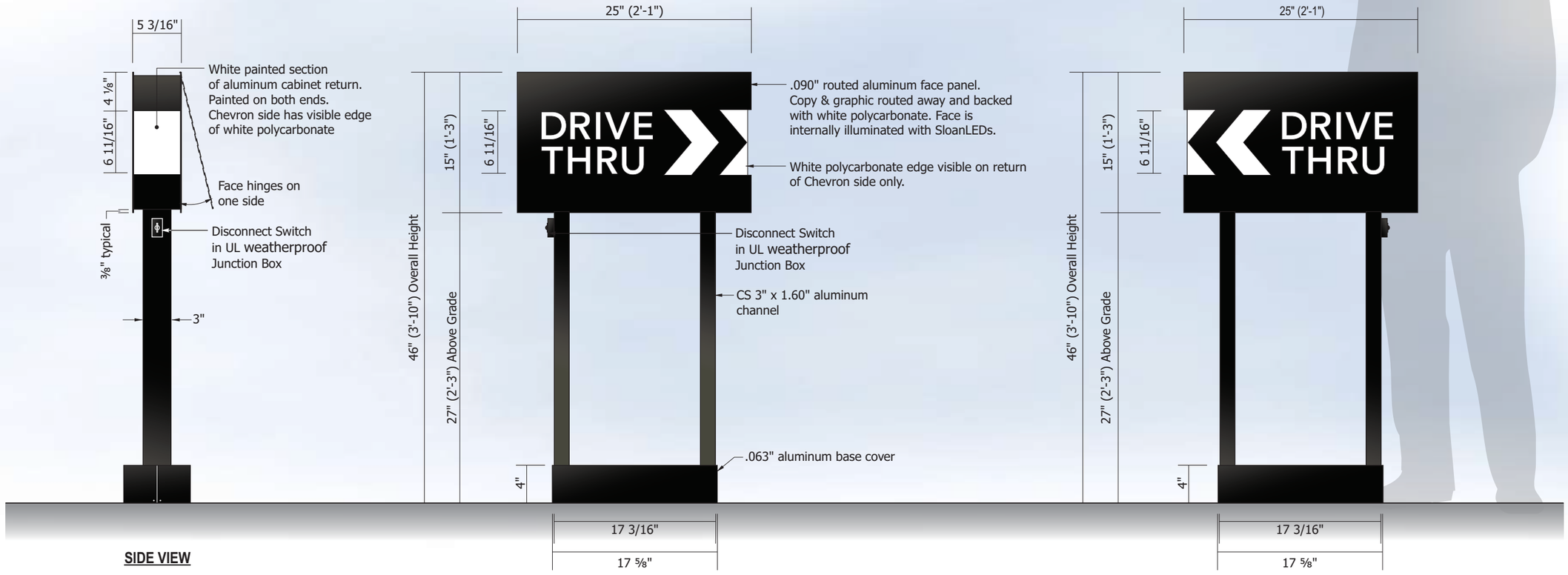


**SIDE VIEW**

Scale: 1" = 1'-0"

Scale: 1" = 1'-0"

SQUARE FOOTAGE:
1.25' x 2.08' = 2.60 Sq Ft

**SUPPORT DESCRIPTION:**
- Supporting structure will be all welded aluminum tube and "C" channel construction painted to match Pantone 419 black (RAL 7021M).
- Base Cover constructed of aluminum and installed to cover electrical connection and base plate.

**COLOR SCHEDULE:**

Pantone 419 Black (RAL 7021M) gloss

Copy = 3M 7725-10 White Opaque Vinyl

**CABINET DESCRIPTION:**
- Fabricated .090" aluminum cabinet painted to match Pantone 419 black (RAL 7021M) and White painted section of cabinet returns as shown.
- Directional Copy and graphics routed away from face and backed with 7328 white polycarbonate. White polycarbonate edge is visible on the return of the cabinet, Chevron side only. Face backing mechanically secured with welded studs & nuts. Interior of cabinet painted Lacryl Starbrite white.
- Welded aluminum construction with no visible fasteners. Fasteners retaining the hinged face will be located on the bottom such that they are not visible. All fasteners used in the assembly of internal components shall be coated to prevent corrosion.

**INTERNAL ILLUMINATION DESCRIPTION:**
- Graphic elements are internally illuminated using GE Tetra LED modules and power supplies. LED's to be mounted to internal baffle with self contained power supply. All electrical components are removable for service.
- Sign meets all regulation in the NEC as well as any local or state codes.
- As per NEC 600.6, sign is equipped with a service disconnect switch.
- Sign must be listed as an Electric Sign per Underwriters Laboratories UL48 and/or CSA and bear the appropriate UL, CUL or CSA relevant certification marks.

atlas BRANDING THE WORLD

National Headquarters: 1077 West Blue Heron Blvd.
West Palm Beach, Florida 33404
800.772.7932
www.atlasbtw.com

| Revisions: | |
|---|---|
| ... | ... |
| ... | ... |
| ... | ... |
| ... | ... |
| ... | ... |

S06

| | |
|---|---|
| PM: Mark B | Address: 4380 Forest Hills Blvd |
| Drawn By: TD | City State: West Palm Beach, FL |
| Date: 1/27/2021 | Drawing Number: 112377-S06 |

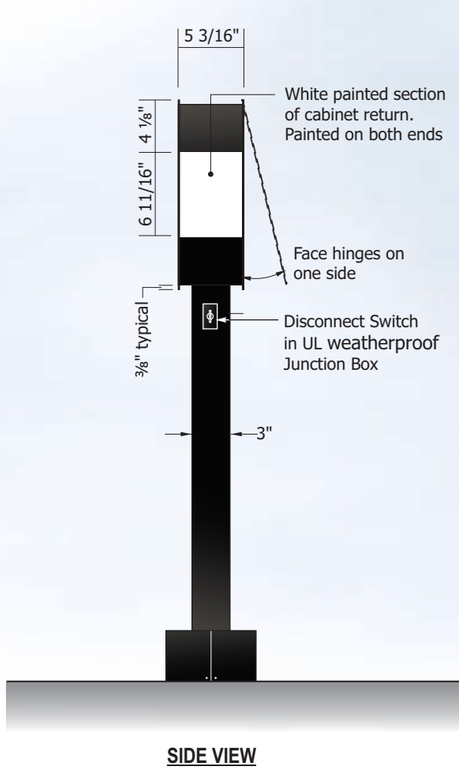


**SIDE VIEW**

SQUARE FOOTAGE:
1.25' x 2.08' = 2.60 Sq Ft

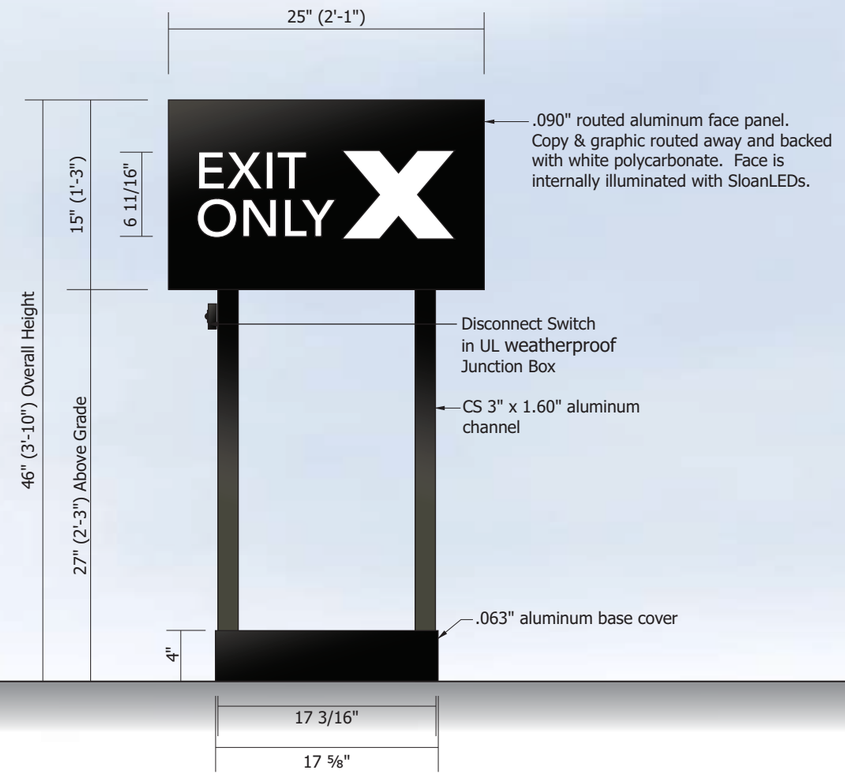


**D/F DIRECTIONAL - FACE 1**
Scale: 1" = 1'-0"

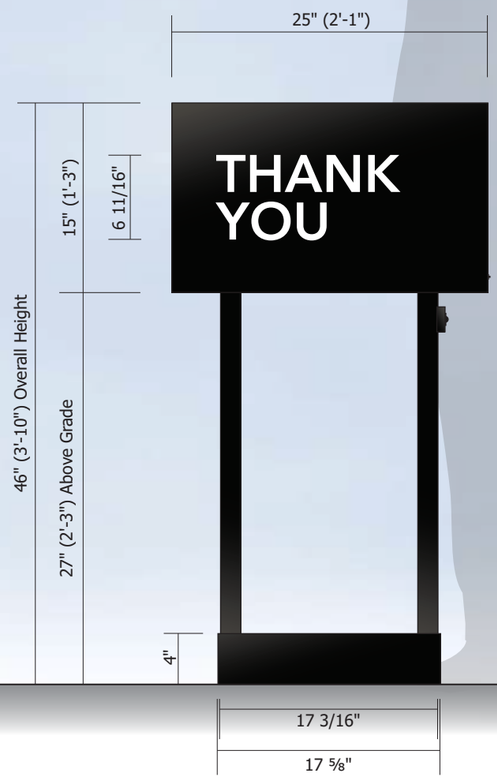


**FACE 2 (OPPOSITE SIDE)**
Scale: 1" = 1'-0"

**SUPPORT DESCRIPTION:**
- Supporting structure will be all welded aluminum tube and "C" channel construction painted to match Pantone 419 black (RAL 7021M).
- Base Cover constructed of aluminum and installed to cover electrical connection and base plate.

**COLOR SCHEDULE:**
- Pantone 419 Black (RAL 7021M) gloss
- Copy = 3M 7725-10 White Opaque Vinyl

**CABINET DESCRIPTION:**
- Fabricated .090" aluminum cabinet painted to match Pantone 419 black (RAL 7021M) and White painted section of cabinet returns as shown.
- Directional Copy and graphics routed away from face and backed with 7328 white polycarbonate. White polycarbonate edge is visible on the return of the cabinet, Chevron side only. Face backing mechanically secured with welded studs & nuts. Interior of cabinet painted Lacryl Starbrite white.
- Welded aluminum construction with no visible fasteners. Fasteners retaining the hinged face will be located on the bottom such that they are not visible. All fasteners used in the assembly of internal components shall be coated to prevent corrosion.

**INTERNAL ILLUMINATION DESCRIPTION:**
- Graphic elements are internally illuminated using GE Tetra LED modules and power supplies. LED's to be mounted to internal baffle with self contained power supply. All electrical components are removable for service.
- Sign meets all regulation in the NEC as well as any local or state codes.
- As per NEC 600.6, sign is equipped with a service disconnect switch.
- Sign must be listed as an Electric Sign per Underwriters Laboratories UL48 and/or CSA and bear the appropriate UL, CUL or CSA relevant certification marks.

atlas BRANDING THE WORLD
National Headquarters: 1077 West Blue Heron Blvd.
West Palm Beach, Florida 33404
800.772.7932
www.atlasbtw.com

| Revisions: | |
|---|---|
| ... | ... |
| ... | ... |
| ... | ... |
| ... | ... |
| ... | ... |

S07

| | |
|---|---|
| PM: Mark B | Address: 4380 Forest Hills Blvd |
| Drawn By: TD | City State: West Palm Beach, FL |
| Date: 1/27/2021 | Drawing Number: 112377-S07 |

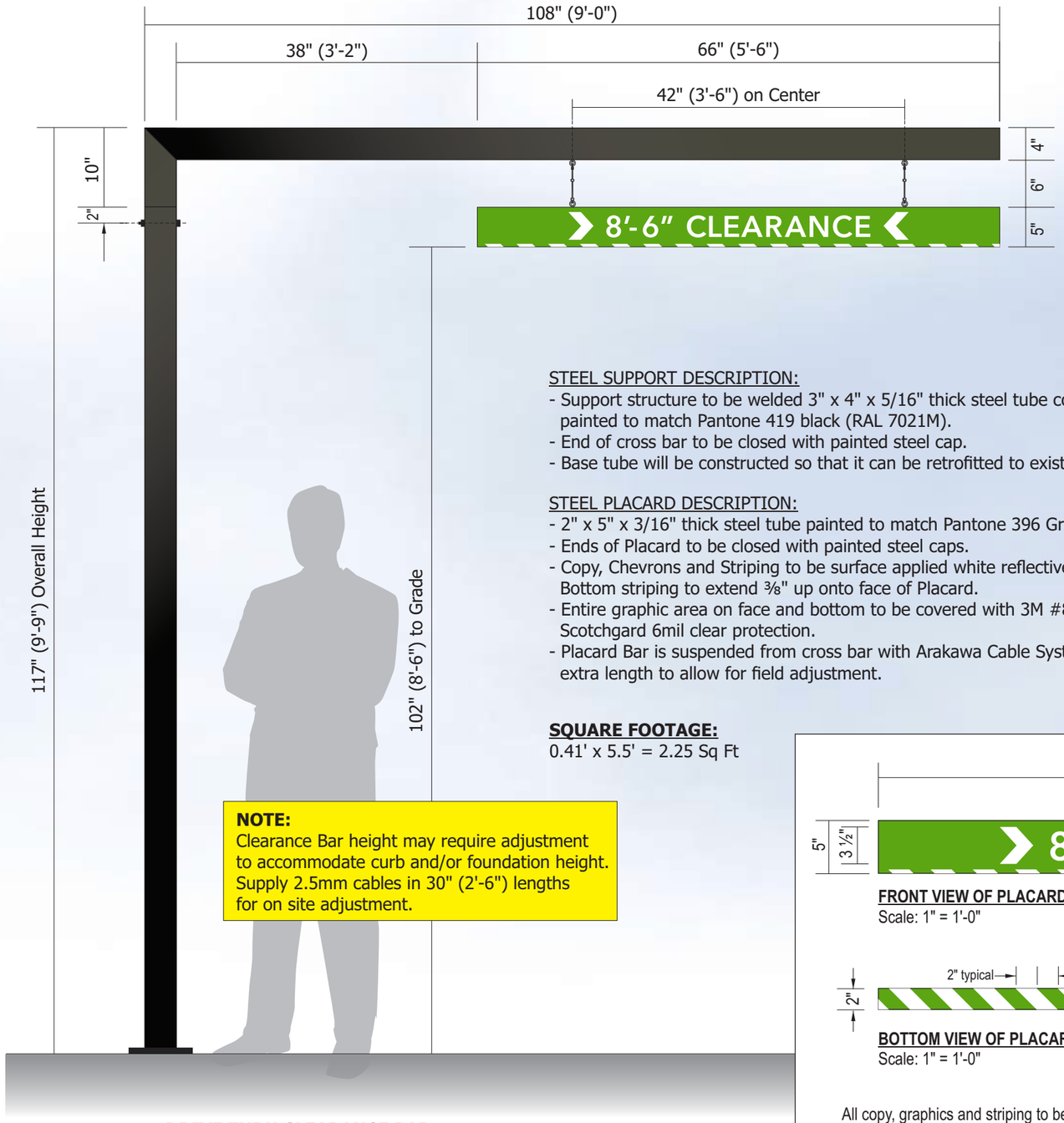


**DRIVE THRU CLEARANCE BAR**
Scale: 3/4" = 1'-0"

**NOTE:**
Clearance Bar height may require adjustment to accommodate curb and/or foundation height. Supply 2.5mm cables in 30" (2'-6") lengths for on site adjustment.

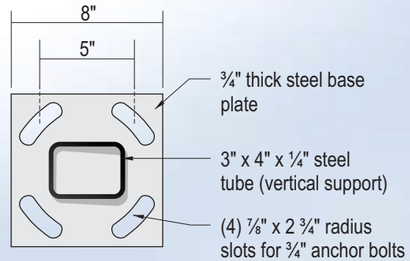


**BASE PLATE DETAIL**
Scale: 1 1/2" = 1'-0"

STEEL SUPPORT DESCRIPTION:
- Support structure to be welded 3" x 4" x 5/16" thick steel tube construction painted to match Pantone 419 black (RAL 7021M).
- End of cross bar to be closed with painted steel cap.
- Base tube will be constructed so that it can be retrofitted to existing foundations.

STEEL PLACARD DESCRIPTION:
- 2" x 5" x 3/16" thick steel tube painted to match Pantone 396 Green (gloss).
- Ends of Placard to be closed with painted steel caps.
- Copy, Chevrons and Striping to be surface applied white reflective vinyl film. Bottom striping to extend ⅜" up onto face of Placard.
- Entire graphic area on face and bottom to be covered with 3M #84808 Scotchgard 6mil clear protection.
- Placard Bar is suspended from cross bar with Arakawa Cable System. Provide extra length to allow for field adjustment.

**SQUARE FOOTAGE:**
0.41' x 5.5' = 2.25 Sq Ft

**COLOR SCHEDULE:**
- Pantone 419 Black (RAL 7021M) satin
- Pantone 369 Green (gloss)
- 3M 680-10 White Reflective vinyl with #84808 clear protection film

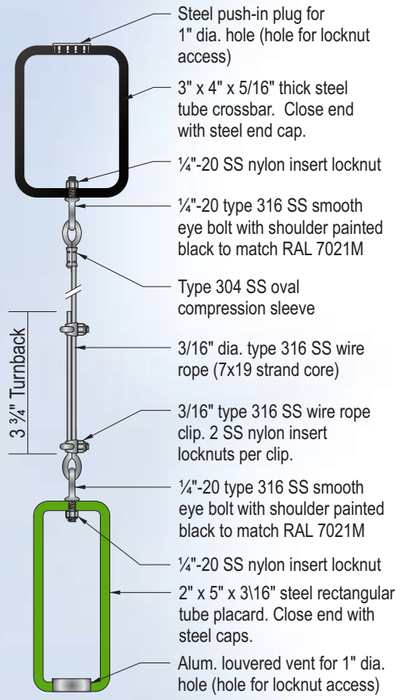


**END SECTION VIEW AT PLACARD**
Scale: 3" = 1'-0"

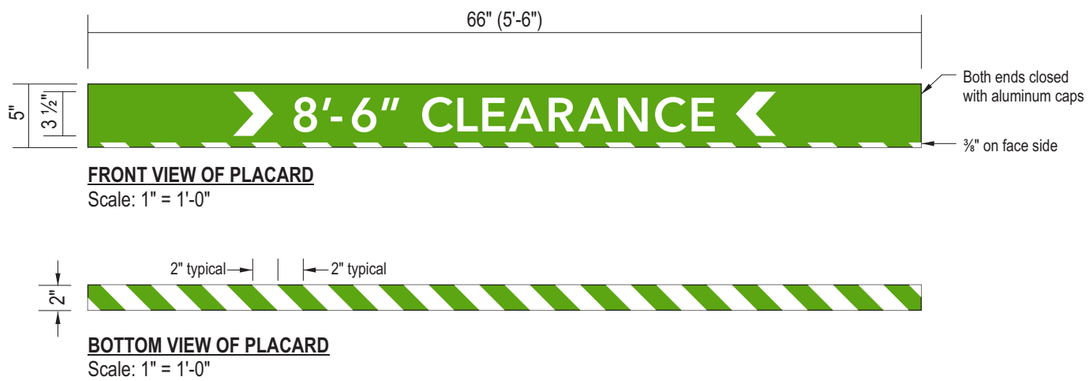


**FRONT VIEW OF PLACARD**
Scale: 1" = 1'-0"

**BOTTOM VIEW OF PLACARD**
Scale: 1" = 1'-0"

All copy, graphics and striping to be 3M 680-10 White Scotchlite reflective vinyl film. Applied to face and bottom of Placard.
After decorating Placard, laminated entire front and bottom surfaces with 3M Scotchgard 6mil clear print protection film (#84808).

atlas BRANDING THE WORLD
National Headquarters: 1077 West Blue Heron Blvd.
West Palm Beach, Florida 33404
800.772.7932
www.atlasbtw.com

| Revisions: | |
|---|---|
| ... | ... |
| ... | ... |
| ... | ... |
| ... | ... |
| ... | ... |

S08

| | |
|---|---|
| PM: Mark B | Address: 4380 Forest Hills Blvd |
| Drawn By: TD | City State: West Palm Beach, FL |
| Date: 1/27/2021 | Drawing Number: 112377-S08 |

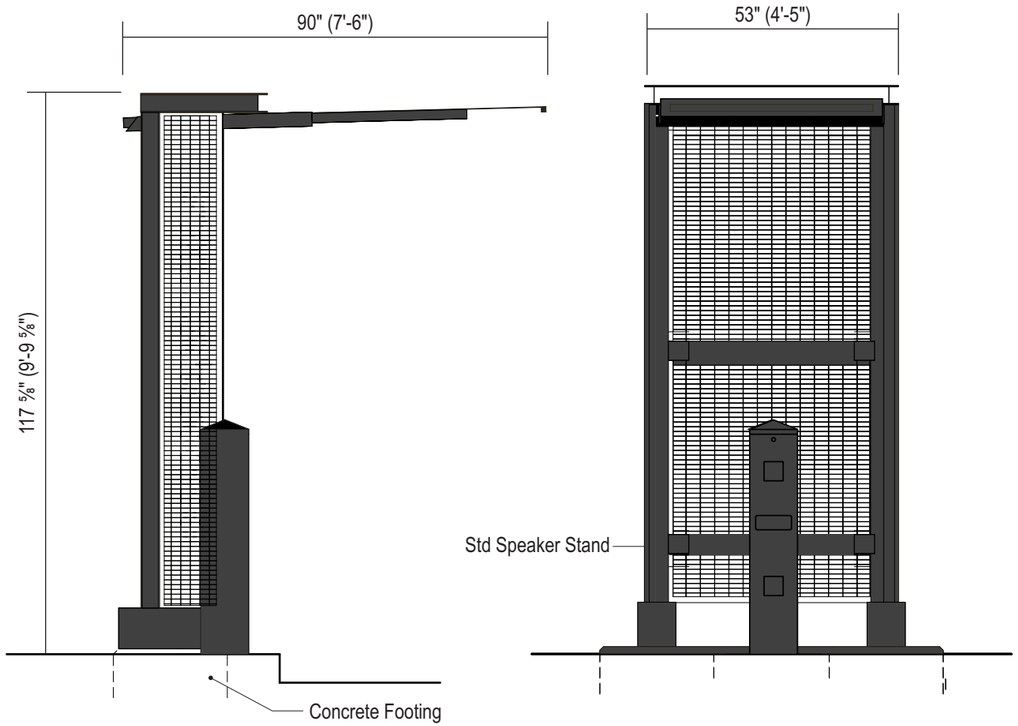


**SPEAKER POST WITH ORDER CANOPY**
Scale: ⅜" = 1'-0"

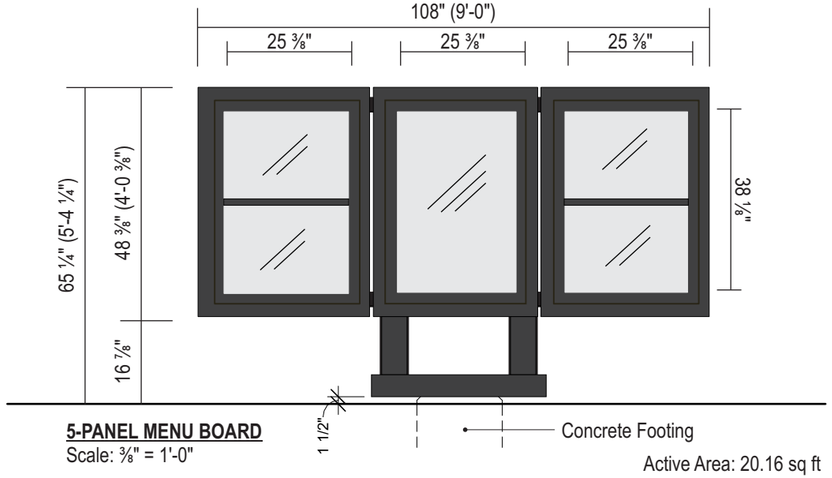


**5-PANEL MENU BOARD**
Scale: ⅜" = 1'-0"
Active Area: 20.16 sq ft

atlas BRANDING THE WORLD
National Headquarters: 1077 West Blue Heron Blvd.
West Palm Beach, Florida 33404
800.772.7932
www.atlasbtw.com

| Revisions: | |
|---|---|
| ... | ... |
| ... | ... |
| ... | ... |
| ... | ... |
| ... | ... |

S09-10

| | |
|---|---|
| PM: Mark B | Address: 4380 Forest Hills Blvd |
| Drawn By: TD | City State: West Palm Beach, FL |
| Date: 1/27/2021 | Drawing Number: 112377-S09-10 |




Scale: 3" = 1'-0"

**SCOPE OF WORK:**
Manufacture (3) S/F aluminum parking lot signs.
Signs will be installed with bolts onto GC supplied posts.

**COLOR SCHEDULE:**

- 3M 680-10 White reflective vinyl background
- To match Pantone 3425 Green
- To match Pantone 560 Dark Green

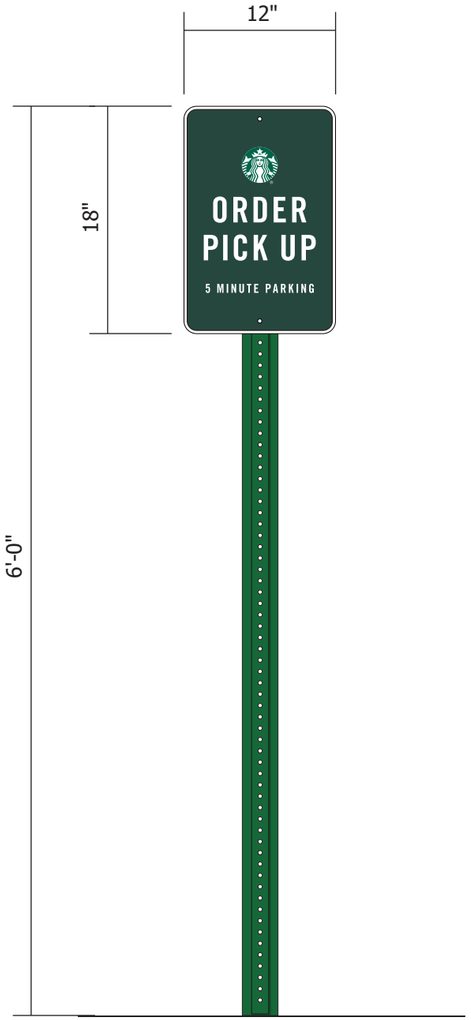


atlas
BRANDING THE WORLD
National Headquarters: 1077 West Blue Heron Blvd.
West Palm Beach, Florida 33404
800.772.7932
www.atlasbtw.com

| Revisions: | |
|---|---|
| ... | ... |
| ... | ... |
| ... | ... |
| ... | ... |
| ... | ... |

S11

| | |
|---|---|
| PM: Mark B | Address: 4380 Forest Hills Blvd |
| Drawn By: TD | City State: West Palm Beach, FL |
| Date: 1/27/2021 | Drawing Number: 112377-S11 |




Scale: 3" = 1'-0"

**SCOPE OF WORK:**
Manufacture (3) S/F aluminum parking lot signs.
Signs will be installed with bolts onto GC supplied posts.

**COLOR SCHEDULE:**

- 3M 680-10 White reflective vinyl background
- 3M 5100-77 Green reflective

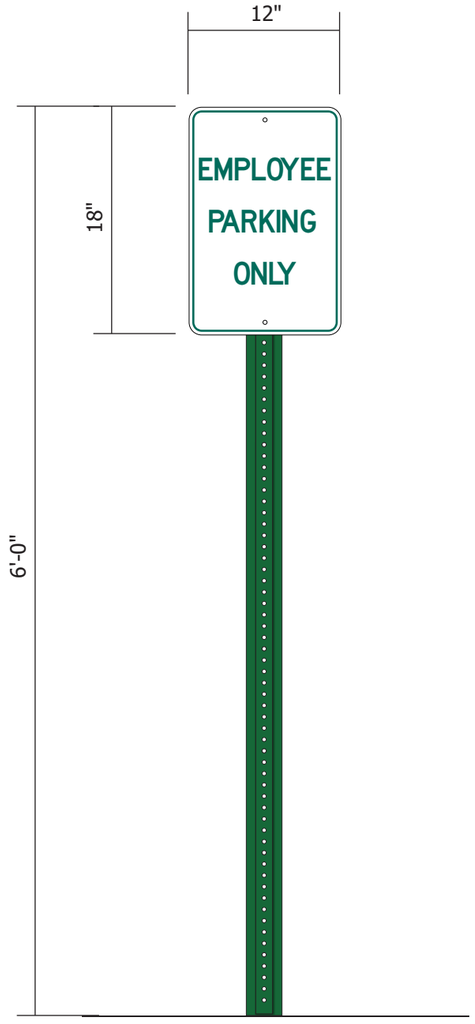


atlas
BRANDING THE WORLD
National Headquarters: 1077 West Blue Heron Blvd.
West Palm Beach, Florida 33404
800.772.7932
www.atlasbtw.com

| Revisions: | |
|---|---|
| ... | ... |
| ... | ... |
| ... | ... |
| ... | ... |
| ... | ... |

S12

| | |
|---|---|
| PM: Mark B | Address: 4380 Forest Hills Blvd |
| Drawn By: TD | City State: West Palm Beach, FL |
| Date: 1/27/2021 | Drawing Number: 112377-S12 |







atlas
BRANDING THE WORLD

National Headquarters: 1077 West Blue Heron Blvd.
West Palm Beach, Florida 33404
800.772.7932
www.atlasbtw.com

| Revisions: | |
|---|---|
| ... | ... |
| ... | ... |
| ... | ... |
| ... | ... |
| ... | ... |

S13

| | |
|---|---|
| PM: Mark B | Address: 4380 Forest Hills Blvd |
| Drawn By: TD | City State: West Palm Beach, FL |
| Date: 1/27/2021 | Drawing Number: 112377-S13 |

3-1-2021

Good evening Iramis,

LWDD has no objection to the certification of this petition. It is located north of the L-8 Canal and is not adjacent.

Thank you.

*Anne Perry Schreiner*

**Anne Perry Schreiner | Right-of-Way Specialist**
**Lake Worth Drainage District |** 13081 Military Trail | Delray Beach, Florida 33484
**Direct Line | 561.819.5577 | Main Line 561.498. 5363 | Fax | 561.495.9694**

***Please consider the environment before printing this email.***
Under Florida law, email addresses are public records. If you do not want your email address released in response to a public records request, do not sent electronic mail to this entity. Instead, contact this office by phone or in writing.

**From:** Iramis Cabrera <icabrera@vpsfl.org>
**Sent:** Monday, March 1, 2021 3:50 PM
**To:** Daniel Turbet (daniel.turbet@fpl.com) <daniel.turbet@fpl.com>; Arnold, Alex <Alex.Arnold@fpl.com>; Hymowitz, Larry <Larry.Hymowitz@dot.state.fl.us>; Anne Perry <aperry@lwdd.net>; tmcmahon@wasteprousa.com; Christopher Schulle <cschulle@wasteprousa.com>; Yash Nagal <YNagal@pbcgov.org>
**Subject:** Starbuck Restaurant

**CAUTION:** This email originated from outside of the organization. Do not click links or open attachments unless you recognize the sender and know the content is safe.

3-4-2021

No fire rescue comments

Wesley Jolin, IAAI-CFI®
Fire Safety Specialist
Palm Beach County Fire Rescue
wjolin@pbcgov.org
561.233.2695
2300 North Jog Road: Suite 1E-40
West Palm Beach FL 33411

# PALM SPRINGS POLICE DEPARTMENT

230 Cypress Lane · Palm Springs, FL 33461 · Phone: 561-968-8243 · www.vpsfl.org


April 1, 2021

Recommendation(s):

1) If/when drive-thru vehicles extend beyond the conflict point, an employee shall be stationed at the drive-thru line to take orders and to prevent traffic from overflowing on the northern part of the drive isles (see illustration).

2) Drive-thru signs along each of the driveway entrances indicating the flow of traffic for the drive-thru window.

3) Tables/chairs shall be removed each night from the outside patio area and secured within the restaurant.

4) The wi-fi and all outside electrical outlets shall be turned off each night to prevent unwanted guests from loitering in the area.

A Higher Standard of Excellence
engenuity group inc.
ENGINEERS SURVEYORS GIS MAPPERS

C. ANDRE BAYMAN, P.S.M.
KEITH B. JACKSON, P.E.
LISA A. TROPEPE, P.E.
ADAM SWANEY, P.E., LEED AP
JENNIFER MALIN, P.S.M.

**March 15, 2021**

**To: Iramis Cabrera, Village of Palm Springs Planner**

**From: Tara Bamber, PE**

**Re: Starbucks at 4380 Forest Hill Blvd**
**Site Plan Approval Letter**
**Engenuity Group Project No. 6001.113**

We have received the following through WeTransfer on 3-1-21:

1. Civil Plans, 4 sheet (C-1, C1A, C-2, C-3), dated 2-23-21, by Zamora & Associates, Inc.
2. Landscape Plan, 3 sheets (L-1, L-2, L-3), revised 2-25-21, by MLA
3. Master Site Plan,1 sheet, dated 2-23-21, by Zamora & Associates, Inc.
4. Section 4- description of Project, 1 sheet
5. Section 8- Variance Only, 2 sheets

We recommend Site Plan approval with the following condition:

1. Verify drainage pipe running north/south at east edge of property and determine any impacts including Silver Buttonwood planting. Add root barrier if necessary.
2. Evaluate existing grease trap.
3. On the Traffic Circulation Plan, it appears there will be a continuous circular traffic pattern before the drive thru with the right turn only.
4. On Sheet C-2, it appears grading will be required at the new drive thru entrance.

If you should have any questions, please give me a call at 561-655-1151.

Cc: Kim Glas-Castro
Ed Horton
Lisa Tropepe, PE

**Department of Engineering and Public Works**
P.O. Box 21229
West Palm Beach, FL 33416-1229
(561) 684-4000
FAX: (561) 684-4050
www.pbcgov.com

**Palm Beach County Board of County Commissioners**
Dave Kerner, Mayor
Robert S. Weinroth, Vice Mayor
Maria G. Marino
Gregg K. Weiss
Maria Sachs
Melissa McKinlay
Mack Bernard

**County Administrator**
Verdenia C. Baker

*"An Equal Opportunity Affirmative Action Employer"*

printed on sustainable and recycled paper

February 3, 2021

Jane A. Caldera, P.E.
Truckin Traffic, LLC
721 Gulf Blvd, Suite 200
Indian Rocks Beach, FL 33785

**RE: Starbucks Redevelopment - 4380 FHB**
**Project #: 210116**
**Traffic Performance Standards Review**

Dear Ms. Caldera:

The Palm Beach County Traffic Division has reviewed the **Starbucks Redevelopment** Traffic Impact Statement, dated December 14, 2020, pursuant to the Traffic Performance Standards in Article 12 of the Palm Beach County Unified Land Development Code (ULDC). The project is summarized as follows:

| | |
|---|---|
| **Municipality:** | Palm Springs |
| **Location:** | SEC of Forest Hill Blvd and Military Trl |
| **PCN:** | 70-42-44-12-00-000-5680 |
| **Access:** | Existing access driveway connections onto Forest Hill Blvd and Military Trl<br>(As used in the study and is NOT necessarily an approval by the County through this TPS letter) |
| **Existing Uses:** | Fast Food Restaurant + DT = 3,357 SF |
| **Proposed Uses:** | Convert the existing use to:<br>Coffee/Donut Shop + DT = 3,357 SF |
| **New Daily Trips:** | 598 |
| **New Peak Hour Trips:** | 84 (43/41) AM; 18 (8/10) PM |
| **Build-out:** | December 31, 2021 |

Based on our review, the Traffic Division has determined the proposed development is located within the Urban Redevelopment Area (URA) Traffic Concurrency Exception Area (TCEA) and therefore, exempt from the Traffic Performance Standards of Palm Beach County.

Please note an FDOT conceptual driveway pre-approval letter must be provided for the access connections onto Forest Hill Blvd and Military Trl for the proposed land use.

Please note the receipt of a Traffic Performance Standards (TPS) approval letter does not constitute the review and issuance of a Palm Beach County Right-of-Way (R/W) Construction Permit nor does it eliminate any requirements that may be deemed as site related. For work within Palm Beach County R/W, a detailed review of the project will be provided upon submittal for a R/W permit application. The project is required to comply with all Palm Beach County standards and may include R/W dedication.

No building permits are to be issued by the Village after the build-out date specified above. The County traffic concurrency approval is subject to the Project Aggregation Rules set forth in the Traffic Performance Standards Ordinance.

The approval letter shall be valid no longer than one year from date of issuance, unless an application for a Site Specific Development Order has been approved, an application for a Site Specific Development Order has been submitted, or the approval letter has been superseded by another approval letter for the same property.

If you have any questions regarding this determination, please contact me at 561-684-4030 or email QBari@pbcgov.org.

Sincerely,

Quazi Bari, P.E., PTOE
Manager – Growth Management
Traffic Division

QB:HA:rb
ec: Addressee
Kim Glas-Castro, Director, Land Development Department, Village of Palm Springs
Hanane Akif, E.I., Project Coordinator II, Traffic Division
Steve Bohovsky, Technical Assistant III, Traffic Division

File: General - TPS - Mun - Traffic Study Review
F:\TRAFFIC\HA\MUNICIPALITIES\APPROVALS\2021\210116 - STARBUCKS REDEVELOPMENT - 4380 FHB.DOCXN

3-5-2021

Hello,

We've been doing some research and found that the Village's Comprehensive Plan refers to Palm Beach County's TPS. The excerpts are shown below:

> *Policy C.3: The Village shall continue to enforce the Palm Beach County Traffic Performance Standard Ordinance to ensure that roadway capacities will be available when necessitated by development.*
>
> *Objective F: The Village of Palm Springs authorizes and establishes the Transportation Concurrency Exception Area (TCEA) for the corridors of Military Trail and Congress Avenue (Figures 1A and 1B). … The Military Trail right-of-way is in unincorporated Palm Beach County as well as most of the contiguous properties (See Figure 1D). However, both corridors and contiguous properties are within the future annexation area of the Village (Figure 1E). The TCEA standards as established by Palm Beach County are delineated below and the data and analysis are adopted by reference.*
>
> *Policy F.1: Prior to issuance of any Development Order for a project within the TCEA, the project must submit a traffic generation study for approval to the County Engineer. This traffic study shall show external project traffic and all other existing and committed development traffic in the area to demonstrate that the proposed project is within the limits for allowable land uses and trips set forth in Tables TE-7.A and TE-7.B.*

If I understand this correctly, the Village effectively adopted the TCEA policies from PBC, and Military Trail corridor is indeed within the Village's TCEA.

We also completed the review of the Traffic Circulation Plan, Comment Response Letter, and the Variance Justification for Hours of Operations.

- The circulation plan looks great! They did exactly what we recommended on the call with the management company. They propose to close one of the accesses to the east of the site and restrict one of the center drive aisles to be one-way southbound/exit only, which will further improve overall circulation. My only comment would be: "Please make sure that a stop sign, a stop bar, and lane marking "STOP" are presented for all stop locations/approaches."
- With the confirmation from PBC, I'm good with the traffic study/responses as well.
- I'm not as familiar with the Variance request, but it does not seem unreasonable.

Please let me know if you have any questions, would like to discuss, or would like me to formalize the comment above in a letter. I can also add anything else the Village has a concern with.

Thanks,

Thuha

Thuha Nguyen, PE, PTOE
via planning, inc.

954.560.5251
thuha.nguyen@viaplanning.com

Village of Palm Springs
Land Development Department
226 Cypress Lane, Palm Springs, FL 33461
(561) 965-4016 Fax (561) 439-4132

# LETTER OF TRANSMITTAL

To: Chad Girard/Ed Horton
Tom Ceccarelli/Frank Castro
Pedro Segovia

Date: March 1/2021

RE: Starbucks Restaurant – Site Plan & Special Exception use – 4084 Forest Hill Blvd

Attached are:

- x Prints
- ☐ Reproducibles
- ☐ Correspondence
- ☐ Report
- ☐ Specifications
- ☐ Applications
- ☐ Other

| COPIES | DATE | DESCRIPTION |
|---|---|---|
| 1 | 2/26/2021 | Site Plan Package |

Transmitted:

- ☐ For Approval
- ☐ As Requested
- xxxx For Review and Comment
- ☐ For Revisions
- ☐ For Your Use
- ☐ Other

REMARKS:

Upon review, please forward any comments regarding the attached materials to me,. Should you have any questions regarding the attached materials, do not hesitate to contact me at (561) 434-5090 or icabrera@vpsfl.org. Thank you for your assistance.

Signed: Iramis Cabrera

NO Comments. Everything looks good utilities wise.

Ed H 3-8-2021

CFN 20190438962
OR BK 31060 PG 45
RECORDED 12/02/2019 12:14:39
Palm Beach County, Florida
AMT 19,600,000.00
DEED DOC 137,200.00
Sharon R. Bock
CLERK & COMPTROLLER
Pgs 0045-0048; (4Pgs)

This Instrument Was Prepared By:
Lavinia James Vaughn
Carlton Fields
4221 W. Boy Scout Blvd, Ste. 1000
Tampa, FL 33607
Return to:
Mural Wald Biondo & Moreno PLLC
2121 Ponce de Leon Blvd. Suite 600
Coral Gables, FL 33134

Florida Documentary Stamp Tax Paid
$137,200.00
Property Appraisers Parcel
Identification (Folio) Number:
70-42-44-12-00-000-5070
70-42-44-12-00-000-5670
70-42-44-12-00-000-5680
70-42-44-12-00-000-5690

Document is NOT a certified copy

# SPECIAL WARRANTY DEED

THIS SPECIAL WARRANTY DEED (this "**Deed**"), executed as of November 26th, 2019, TPH FOREST HILL LLC, a Delaware limited liability company (the "**Grantor**"), whose mailing address is c/o Trinity Place Holdings Inc., 340 Madison Avenue, Suite 3C, New York, New York 10173 to SHOPPES OF FOREST HILLS LLC, a Delaware limited liability company (the "**Grantee**") whose mailing address is 1205 S.W. 37th Avenue, 3rd Floor, Coral Gables, FL 33135.

**W I T N E S S E T H:**

That Grantor, for and in consideration of the sum of $10 and other good and valuable consideration to Grantor in hand paid by Grantee, the receipt and sufficiency of which is acknowledged, has granted, bargained, and sold to Grantee and Grantee's heirs and assigns forever, the following described real property situate, lying, and being in Palm Beach County, Florida, and described in **EXHIBIT "A"** attached to this Deed (the "**Property**").

TO HAVE AND TO HOLD the Property in fee simple, together with all and singular, the rights, easements, privileges, tenements, hereditaments, and appurtenances belonging or in anyways appertaining to the Property, and the Grantor hereby covenanting that Grantor will warrant and defend the title to the Property unto Grantee and unto Grantee's successors and assigns, against the lawful claims and demands of all persons claiming under or through Grantor, but not otherwise.

This conveyance is subject to (a) real property taxes for the year 2019 and subsequent years, (b) zoning, building code and other use restrictions imposed by governmental authority; and (c) agreements, restrictions, reservations and easements of record.

IN WITNESS WHEREOF, Grantor has executed this deed as of the day and year first above written.

Signed, Sealed, and Delivered in the presence of:

Signature of Witness 1

LINDA FLYNN
Print or type name of Witness 1

Signature of Witness 2

MABBIE BROWN
Print or type name of Witness 2

TPH FOREST HILL LLC, a Delaware limited liability company

By: _____
Steven Kahn, Chief Financial Officer

STATE OF New Jersey )
) ss.:
COUNTY OF Bergen )

The foregoing instrument was acknowledged before me this 21st day of November, 2019, by Steven Kahn, as Chief Financial Officer of TPH FOREST HILL, a Delaware limited liability company, on behalf of the company. He is either ☑ personally known to me or ☐ produced his/her _____ (state) driver's license as identification.

[Official Notarial Seal]

Notary Public

Deborah L Telson
(Print or type name)

Commission No.: _____

My Commission Expires:

DEBORAH L. TELSON
NOTARY PUBLIC OF NEW JERSEY
My Commission Expires 8/12/2020

Public Document Certified Copy

**EXHIBIT A**

Legal Description of the Property

This Is Not a Certified Copy

PART ONE

THE SOUTH ONE-HALF (S1/2) OF TRACT 5, BLOCK 4, SECTION 12, TOWNSHIP 44 SOUTH, RANGE 42 EAST, PLAT NO, 1, PALM BEACH PLANTATIONS, ACCORDING TO THE PLAT THEREOF, AS RECORDED IN PLAT BOOK 10, PAGE 20, PUBLIC RECORDS OF PALM BEACH COUNTY, FLORIDA.

EXCEPTING THE WEST 60.00 FEET THEREOF FOR MILITARY TRAIL (S.R NO. 809 RIGHT OF WAY, ALSO EXCEPTING THE EAST 100 FEET OF THE NORTH ONE-HALF (N 1/2) OF SOUTH ONE-HALF (S1/2) OF SAID TRACT 5,

TOGETHER WITH

THE NORTH ONE-HALF (N1/2) OF TRACT 5, BLOCK 4, SECTION 12, TOWNSHIP 44 SOUTH, RANGE 42 EAST, PLAT NO. 1, PALM BEACH PLANTATIONS, ACCORDING TO THE PLAT THEREOF, AS RECORDED IN PLAT BOOK 10, PAGE 20, PUBLIC (RECORDS, PALM BEACH COUNTY, FLORIDA.

EXCEPTING THE WEST 335.21 FEET AND THE EAST 600.00 FEET THEREOF, AS MEASURED ALONG THE NORTH TRACT LINE OF SAID TRACT 5, ALSO EXCEPTING THE NORTH 60.00 FEET THEREOF FOR FOREST HILL BOULEVARD RIGHT OF WAY.

PART TWO

TOGETHER WITH:

NON-EXCLUSIVE EASEMENT(S) FOR VEHICULAR AND PEDESTRIAN INGRESS AND EGRESS FOR THE BENEFIT OF THE ABOVE PARCEL BY AND BETWEEN SOUTHEAST BANK, N.A., AND SHOPPES OF FOREST HILL, LTD, AS SET FORTH AND CREATED BY THAT CERTAIN EASEMENT AGREEMENT RECORDED JUNE 6, 1984 IN OFFICIAL RECORD BOOK 4260, PAGE 1636, PUBLIC RECORDS OF PALM BEACH COUNTY, FLORIDA, BEING MORE PARTICULARLY DESCRIBED AS FOLLOWS THE SOUTHEAST BANK EASEMENT PARCEL, TO WIT:

LEGAL DESCRIPTION OF SOUTHEAST BANK PROPERTY

THE WEST 500 FEET OF THE EAST 600 FEET OF THE NORTH ONE-HALF (N1/2) OF TRACT 5, BLOCK 4, SECTION 12, TOWNSHIP 44 SOUTH, RANGE 42 EAST, PLAT NO. 1, PALM BEACH PLANTATIONS ACCORDING TO THE PLAT THEREOF, AS RECORDED IN PLAT BOOK 10, PAGE 20, PUBLIC RECORDS, PALM BEACH COUNTY, FLORIDA, SAID 500 AND 600 FOOT DISTANCES ARE AS MEASURED ALONG THE NORTH LINE OF SAID TRACT 5.

EXCEPTING THE NORTH 60.00 FEET THEREOF FOR FOREST HILL BOULEVARD RIGHT OF WAY.

PART THREE

TOGETHER WITH:

NON-EXCLUSIVE EASEMENT(S) FOR VEHICULAR AND PEDESTRIAN INGRESS AND EGRESS FOR THE BENEFIT OF THE ABOVE PARCEL BY AND BETWEEN BURGER KING CORPORATION AND SHOPPES OF FOREST HILL, LTD., RECORDED IN OFFICIAL RECORDS BOOK 4394, PAGE 1282, AND CONSENT AND JOINDER AGREEMENT BY FIRST NATIONAL BANK IN PALM BEACH AND JUDY WELLS HOFFMAN, AS TRUSTEES OF THE RESIDUAL TRUST UNDER THE WILL OF HENRY K. WELLS, DECEASED, RECORDED IN OFFICIAL RECORDS BOOK 4521, PAGE 1907, PUBLIC RECORDS OF PALM BEACH COUNTY, FLORIDA, AFFECTING THE FOLLOWING DESCRIBED PARCEL, HEREINAFTER REFERRED TO AS THE BURGER KING EASEMENT PARCEL, TO-WIT:

A PARCEL OF LAND LYING IN THE SOUTHEAST QUARTER (SE1/4) OF SECTION 12, TOWNSHIP 44 SOUTH, RANGE 42 EAST, PALM BEACH COUNTY, FLORIDA, BEING MORE PARTICULARLY DESCRIBED AS FOLLOWS:

COMMENCE AT THE NORTHEAST CORNER OF TRACT 5, IN BLOCK 4, OF PALM BEACH PLANTATIONS, MODEL LAND COMPANY SUBDIVISION OF SECTION 12, TOWNSHIP 44 SOUTH, RANGE 42 EAST, ACCORDING TO THE PLAT THEREOF AS RECORDED IN PLAT BOOK 10, PAGE 20, OF THE PUBLIC RECORDS OF PALM BEACH COUNTY, FLORIDA; THENCE RUN WESTERLY ALONG THE NORTH LINE OF SAID TRACT 5 FOR A DISTANCE OF 800 FEET TO A POINT; THENCE RUN SOUTHERLY PARALLEL WITH THE EAST LINE OF SAID TRACT 5 FOR A DISTANCE OF 333.64 FEET TO A POINT ON THE SOUTH LINE OF THE NORTH HALF (N 1/2) OF SAID TRACT 5; THENCE RUN WESTERLY ALONG THE SOUTH LINE OF THE NORTH HALF (N1/2) OF SAID TRACT 5 FOR A DISTANCE OF 257.14 FEET, MORE OR LESS, TO THE POINT OF BEGINNING; THENCE CONTINUE WESTERLY ALONG THE SOUTH LINE OF THE NORTH HALF (N 1/2) OF SAID TRACT 5 FOR A DISTANCE OF 225 FEET TO A POINT ON THE EAST LINE OF THE WEST 53 FEET OF SAID TRACT 5; THENCE RUN NORTHERLY ALONG THE EAST LINE OF THE WEST 53 FEET OF SAID TRACT 5 FOR A DISTANCE OF 130.45 FEET, MORE OR LESS, TO A POINT IN THE SOUTH LINE OF THE NORTH 203.06 FEET OF SAID TRACT 5; THENCE RUN EASTERLY PARALLEL WITH THE NORTH LINE OF SAID TRACT 5 FOR A DISTANCE OF 125.00 FEET TO A POINT; THENCE RUN NORTHERLY PARALLEL WITH THE WEST LINE OF SAID TRACT 5 FOR A DISTANCE OF 150.00 FEET, MORE OR LESS, TO A POINT ON THE SOUTH LINE OF THE NORTH 53 FEET OF SAID TRACT 5; THENCE RUN EASTERLY ALONG THE SOUTH LINE OF THE NORTH 53 FEET OF SAID TRACT 5 FOR A DISTANCE OF 100 FEET TO A POINT; THENCE RUN SOUTHERLY PARALLEL WITH THE WEST LINE OF SAID TRACT 5 FOR A DISTANCE OF 280.48 FEET, MORE OR LESS TO THE POINT OF BEGINNING.




SCHEMATIC DESIGN ONLY - NOT INTENDED FOR CONSTRUCTION USE

© 2017 STARBUCKS COFFEE COMPANY

**STARBUCKS®**
2401 UTAH AVENUE SOUTH
SEATTLE, WASHINGTON 98134
(206) 318-1575

THESE DRAWINGS AND THE PROJECT MANUAL ARE CONFIDENTIAL AND SHALL REMAIN THE SOLE PROPERTY OF STARBUCKS CORPORATION, WHICH IS THE OWNER OF THE COPYRIGHT IN THIS WORK. THEY SHALL NOT BE REPRODUCED (IN WHOLE OR IN PART), SHARED WITH THIRD PARTIES OR USED IN ANY MANNER ON OTHER PROJECTS OR EXTENSIONS TO THIS PROJECT WITHOUT THE PRIOR WRITTEN CONSENT OF STARBUCKS CORPORATION. THESE DRAWINGS AND SPECIFICATIONS ARE INTENDED TO EXPRESS DESIGN INTENT FOR A PROTOTYPICAL STARBUCKS STORE (WHICH IS SUBJECT TO CHANGE AT ANYTIME) AND DO NOT REFLECT ACTUAL SITE CONDITIONS. NEITHER PARTY SHALL HAVE ANY OBLIGATION NOR LIABILITY TO THE OTHER (EXCEPT STATED ABOVE) UNTIL A WRITTEN AGREEMENT IS FULLY EXECUTED BY BOTH PARTIES.

STARBUCKS TEMPLATE VERSION i2020-04-20

**ARCHITECT OF RECORD**
ASOOSOCIATES
Soos & Associates, Inc.
105 Schelter Road
Lincolnshire, IL 60069
p: 847 821 7667

PROJECT NAME:
FOREST HILL BLVD &
MILITARY TRL

PROJECT ADDRESS:
4380 Forest Hill Blvd
West Palm Beach, FL 33406

STORE #:
PROJECT #: 88231-001
ISSUE DATE: 03/24/2021
DESIGN MANAGER: IVETTE CARDENAS
PRODUCTION DESIGNER: SOOS
CHECKED BY:

**Revision Schedule**

| Rev | Date | By | Description |
|---|---|---|---|
| | | | |
| | | | |
| | | | |
| | | | |
| | | | |

SHEET TITLE:
COLOR SITE PLAN

SCALE: AS SHOWN

SHEET NUMBER:
A210

3/24/2021 1:48:42 PM E:\Revit\88231-001_Forest Hill Blvd & Military Trail_CENTRAL2_cchone3.rvt




SCHEMATIC DESIGN ONLY - NOT INTENDED FOR CONSTRUCTION USE

© 2017 STARBUCKS COFFEE COMPANY

**STARBUCKS®**
2401 UTAH AVENUE SOUTH
SEATTLE, WASHINGTON 98134
(206) 318-1575

THESE DRAWINGS AND THE PROJECT MANUAL ARE CONFIDENTIAL AND SHALL REMAIN THE SOLE PROPERTY OF STARBUCKS CORPORATION, WHICH IS THE OWNER OF THE COPYRIGHT IN THIS WORK. THEY SHALL NOT BE REPRODUCED (IN WHOLE OR IN PART), SHARED WITH THIRD PARTIES OR USED IN ANY MANNER ON OTHER PROJECTS OR EXTENSIONS TO THIS PROJECT WITHOUT THE PRIOR WRITTEN CONSENT OF STARBUCKS CORPORATION. THESE DRAWINGS AND SPECIFICATIONS ARE INTENDED TO EXPRESS DESIGN INTENT FOR A PROTOTYPICAL STARBUCKS STORE (WHICH IS SUBJECT TO CHANGE AT ANYTIME) AND DO NOT REFLECT ACTUAL SITE CONDITIONS. NEITHER PARTY SHALL HAVE ANY OBLIGATION NOR LIABILITY TO THE OTHER (EXCEPT STATED ABOVE) UNTIL A WRITTEN AGREEMENT IS FULLY EXECUTED BY BOTH PARTIES.

STARBUCKS TEMPLATE VERSION i2020-04-20

**ARCHITECT OF RECORD**
ASOOSOCIATES
Soos & Associates, Inc.
105 Schelter Road
Lincolnshire, IL 60069
p: 847 821 7667

PROJECT NAME:
FOREST HILL BLVD &
MILITARY TRL

PROJECT ADDRESS:
4380 Forest Hill Blvd
West Palm Beach, FL 33406

STORE #:
PROJECT #: 88231-001
ISSUE DATE: 03/24/2021
DESIGN MANAGER: IVETTE CARDENAS
PRODUCTION DESIGNER: SOOS
CHECKED BY:

**Revision Schedule**

| Rev | Date | By | Description |
|---|---|---|---|
| | | | |
| | | | |
| | | | |
| | | | |
| | | | |

SHEET TITLE:
COLOR SITE PLAN

SCALE: AS SHOWN

SHEET NUMBER:
A211

3/24/2021 2:04:30 PM E:\Revit\88231-001_Forest Hill Blvd & Military Trail_CENTRAL2_cchone3.rvt




SCHEMATIC DESIGN ONLY - NOT INTENDED FOR CONSTRUCTION USE

© 2017 STARBUCKS COFFEE COMPANY

**STARBUCKS®**
2401 UTAH AVENUE SOUTH
SEATTLE, WASHINGTON 98134
(206) 318-1575

THESE DRAWINGS AND THE PROJECT MANUAL ARE CONFIDENTIAL AND SHALL REMAIN THE SOLE PROPERTY OF STARBUCKS CORPORATION, WHICH IS THE OWNER OF THE COPYRIGHT IN THIS WORK. THEY SHALL NOT BE REPRODUCED (IN WHOLE OR IN PART), SHARED WITH THIRD PARTIES OR USED IN ANY MANNER ON OTHER PROJECTS OR EXTENSIONS TO THIS PROJECT WITHOUT THE PRIOR WRITTEN CONSENT OF STARBUCKS CORPORATION. THESE DRAWINGS AND SPECIFICATIONS ARE INTENDED TO EXPRESS DESIGN INTENT FOR A PROTOTYPICAL STARBUCKS STORE (WHICH IS SUBJECT TO CHANGE AT ANYTIME) AND DO NOT REFLECT ACTUAL SITE CONDITIONS. NEITHER PARTY SHALL HAVE ANY OBLIGATION NOR LIABILITY TO THE OTHER (EXCEPT STATED ABOVE) UNTIL A WRITTEN AGREEMENT IS FULLY EXECUTED BY BOTH PARTIES.

STARBUCKS TEMPLATE VERSION i2020-04-20

**ARCHITECT OF RECORD**
ASOOSOCIATES
Soos & Associates, Inc.
105 Schelter Road
Lincolnshire, IL 60069
p: 847 821 7667

PROJECT NAME:
FOREST HILL BLVD &
MILITARY TRL

PROJECT ADDRESS:
4380 Forest Hill Blvd
West Palm Beach, FL 33406

STORE #:
PROJECT #: 88231-001
ISSUE DATE: 03/24/2021
DESIGN MANAGER: IVETTE CARDENAS
PRODUCTION DESIGNER: SOOS
CHECKED BY:

**Revision Schedule**

| Rev | Date | By | Description |
|---|---|---|---|
| | | | |
| | | | |
| | | | |
| | | | |
| | | | |

SHEET TITLE:
COLOR SITE PLAN

SCALE: AS SHOWN

SHEET NUMBER:
A212

3/24/2021 2:06:29 PM E:\Revit\88231-001_Forest Hill Blvd & Military Trail_CENTRAL2_cchone3.rvt




SCHEMATIC DESIGN ONLY - NOT INTENDED FOR CONSTRUCTION USE

© 2017 STARBUCKS COFFEE COMPANY

**STARBUCKS®**
2401 UTAH AVENUE SOUTH
SEATTLE, WASHINGTON 98134
(206) 318-1575

THESE DRAWINGS AND THE PROJECT MANUAL ARE CONFIDENTIAL AND SHALL REMAIN THE SOLE PROPERTY OF STARBUCKS CORPORATION, WHICH IS THE OWNER OF THE COPYRIGHT IN THIS WORK. THEY SHALL NOT BE REPRODUCED (IN WHOLE OR IN PART), SHARED WITH THIRD PARTIES OR USED IN ANY MANNER ON OTHER PROJECTS OR EXTENSIONS TO THIS PROJECT WITHOUT THE PRIOR WRITTEN CONSENT OF STARBUCKS CORPORATION. THESE DRAWINGS AND SPECIFICATIONS ARE INTENDED TO EXPRESS DESIGN INTENT FOR A PROTOTYPICAL STARBUCKS STORE (WHICH IS SUBJECT TO CHANGE AT ANYTIME) AND DO NOT REFLECT ACTUAL SITE CONDITIONS. NEITHER PARTY SHALL HAVE ANY OBLIGATION NOR LIABILITY TO THE OTHER (EXCEPT STATED ABOVE) UNTIL A WRITTEN AGREEMENT IS FULLY EXECUTED BY BOTH PARTIES.

STARBUCKS TEMPLATE VERSION i2020-04-20

**ARCHITECT OF RECORD**
ASOOSOCIATES
Soos & Associates, Inc.
105 Schelter Road
Lincolnshire, IL 60069
p: 847 821 7667

PROJECT NAME:
FOREST HILL BLVD &
MILITARY TRL

PROJECT ADDRESS:
4380 Forest Hill Blvd
West Palm Beach, FL 33406

STORE #:
PROJECT #: 88231-001
ISSUE DATE: 03/24/2021
DESIGN MANAGER: IVETTE CARDENAS
PRODUCTION DESIGNER: SOOS
CHECKED BY:

**Revision Schedule**

| Rev | Date | By | Description |
|---|---|---|---|
| | | | |
| | | | |
| | | | |
| | | | |
| | | | |

SHEET TITLE:
COLOR SITE PLAN

SCALE: AS SHOWN

SHEET NUMBER:
A213

3/24/2021 2:08:10 PM E:\Revit\88231-001_Forest Hill Blvd & Military Trail_CENTRAL2_cchome3.rvt




SCHEMATIC DESIGN ONLY - NOT INTENDED FOR CONSTRUCTION USE

© 2017 STARBUCKS COFFEE COMPANY

**STARBUCKS®**
2401 UTAH AVENUE SOUTH
SEATTLE, WASHINGTON 98134
(206) 318-1575

THESE DRAWINGS AND THE PROJECT MANUAL ARE CONFIDENTIAL AND SHALL REMAIN THE SOLE PROPERTY OF STARBUCKS CORPORATION, WHICH IS THE OWNER OF THE COPYRIGHT IN THIS WORK. THEY SHALL NOT BE REPRODUCED (IN WHOLE OR IN PART), SHARED WITH THIRD PARTIES OR USED IN ANY MANNER ON OTHER PROJECTS OR EXTENSIONS TO THIS PROJECT WITHOUT THE PRIOR WRITTEN CONSENT OF STARBUCKS CORPORATION. THESE DRAWINGS AND SPECIFICATIONS ARE INTENDED TO EXPRESS DESIGN INTENT FOR A PROTOTYPICAL STARBUCKS STORE (WHICH IS SUBJECT TO CHANGE AT ANYTIME) AND DO NOT REFLECT ACTUAL SITE CONDITIONS. NEITHER PARTY SHALL HAVE ANY OBLIGATION NOR LIABILITY TO THE OTHER (EXCEPT STATED ABOVE) UNTIL A WRITTEN AGREEMENT IS FULLY EXECUTED BY BOTH PARTIES.

STARBUCKS TEMPLATE VERSION i2020-04-20

**ARCHITECT OF RECORD**
ASOOSOCIATES
Soos & Associates, Inc.
105 Schelter Road
Lincolnshire, IL 60069
p: 847 821 7667

PROJECT NAME:
FOREST HILL BLVD &
MILITARY TRL

PROJECT ADDRESS:
4380 Forest Hill Blvd
West Palm Beach, FL 33406

STORE #:
PROJECT #: 88231-001
ISSUE DATE: 03/24/2021
DESIGN MANAGER: IVETTE CARDENAS
PRODUCTION DESIGNER: SOOS
CHECKED BY:

**Revision Schedule**

| Rev | Date | By | Description |
|---|---|---|---|
| | | | |
| | | | |
| | | | |
| | | | |
| | | | |

SHEET TITLE:
RENDERINGS

SCALE: AS SHOWN

SHEET NUMBER:
A204

3/24/2021 1:46:55 PM E:\Revit\88231-001_Forest Hill Blvd & Military Trail_CENTRAL2_cchone3.rvt




SCHEMATIC DESIGN ONLY - NOT INTENDED FOR CONSTRUCTION USE

© 2017 STARBUCKS COFFEE COMPANY

**STARBUCKS®**
2401 UTAH AVENUE SOUTH
SEATTLE, WASHINGTON 98134
(206) 318-1575

THESE DRAWINGS AND THE PROJECT MANUAL ARE CONFIDENTIAL AND SHALL REMAIN THE SOLE PROPERTY OF STARBUCKS CORPORATION, WHICH IS THE OWNER OF THE COPYRIGHT IN THIS WORK. THEY SHALL NOT BE REPRODUCED (IN WHOLE OR IN PART), SHARED WITH THIRD PARTIES OR USED IN ANY MANNER ON OTHER PROJECTS OR EXTENSIONS TO THIS PROJECT WITHOUT THE PRIOR WRITTEN CONSENT OF STARBUCKS CORPORATION. THESE DRAWINGS AND SPECIFICATIONS ARE INTENDED TO EXPRESS DESIGN INTENT FOR A PROTOTYPICAL STARBUCKS STORE (WHICH IS SUBJECT TO CHANGE AT ANYTIME) AND DO NOT REFLECT ACTUAL SITE CONDITIONS. NEITHER PARTY SHALL HAVE ANY OBLIGATION NOR LIABILITY TO THE OTHER (EXCEPT STATED ABOVE) UNTIL A WRITTEN AGREEMENT IS FULLY EXECUTED BY BOTH PARTIES.

STARBUCKS TEMPLATE VERSION i2020-04-20

**ARCHITECT OF RECORD**
ASOOSOCIATES
Soos & Associates, Inc.
105 Schelter Road
Lincolnshire, IL 60069
p: 847 821 7667

PROJECT NAME:
FOREST HILL BLVD &
MILITARY TRL

PROJECT ADDRESS:
4380 Forest Hill Blvd
West Palm Beach, FL 33406

STORE #:
PROJECT #: 88231-001
ISSUE DATE: 03/24/2021
DESIGN MANAGER: IVETTE CARDENAS
PRODUCTION DESIGNER: SOOS
CHECKED BY:

**Revision Schedule**

| Rev | Date | By | Description |
|---|---|---|---|
| | | | |
| | | | |
| | | | |
| | | | |
| | | | |

SHEET TITLE:
RENDERINGS

SCALE: AS SHOWN

SHEET NUMBER:
A205

3/24/2021 1:46:55 PM E:\Revit\88231-001_Forest Hill Blvd & Military Trail_CENTRAL2_cchone3.rvt




SCHEMATIC DESIGN ONLY - NOT INTENDED FOR CONSTRUCTION USE

© 2017 STARBUCKS COFFEE COMPANY

**STARBUCKS®**
2401 UTAH AVENUE SOUTH
SEATTLE, WASHINGTON 98134
(206) 318-1575

THESE DRAWINGS AND THE PROJECT MANUAL ARE CONFIDENTIAL AND SHALL REMAIN THE SOLE PROPERTY OF STARBUCKS CORPORATION, WHICH IS THE OWNER OF THE COPYRIGHT IN THIS WORK. THEY SHALL NOT BE REPRODUCED (IN WHOLE OR IN PART), SHARED WITH THIRD PARTIES OR USED IN ANY MANNER ON OTHER PROJECTS OR EXTENSIONS TO THIS PROJECT WITHOUT THE PRIOR WRITTEN CONSENT OF STARBUCKS CORPORATION. THESE DRAWINGS AND SPECIFICATIONS ARE INTENDED TO EXPRESS DESIGN INTENT FOR A PROTOTYPICAL STARBUCKS STORE (WHICH IS SUBJECT TO CHANGE AT ANYTIME) AND DO NOT REFLECT ACTUAL SITE CONDITIONS. NEITHER PARTY SHALL HAVE ANY OBLIGATION NOR LIABILITY TO THE OTHER (EXCEPT STATED ABOVE) UNTIL A WRITTEN AGREEMENT IS FULLY EXECUTED BY BOTH PARTIES.

STARBUCKS TEMPLATE VERSION i2020-04-20

**ARCHITECT OF RECORD**
ASOOSOCIATES
Soos & Associates, Inc.
105 Schelter Road
Lincolnshire, IL 60069
p: 847 821 7667

PROJECT NAME:
FOREST HILL BLVD &
MILITARY TRL

PROJECT ADDRESS:
4380 Forest Hill Blvd
West Palm Beach, FL 33406

STORE #:
PROJECT #: 88231-001
ISSUE DATE: 03/24/2021
DESIGN MANAGER: IVETTE CARDENAS
PRODUCTION DESIGNER: SOOS
CHECKED BY:

**Revision Schedule**

| Rev | Date | By | Description |
|---|---|---|---|
| | | | |
| | | | |
| | | | |
| | | | |
| | | | |

SHEET TITLE:
RENDERINGS

SCALE: AS SHOWN

SHEET NUMBER:
A206

3/24/2021 1:46:55 PM E:\Revit\88231-001_Forest Hill Blvd & Military Trail_CENTRAL2_cchone3.rvt

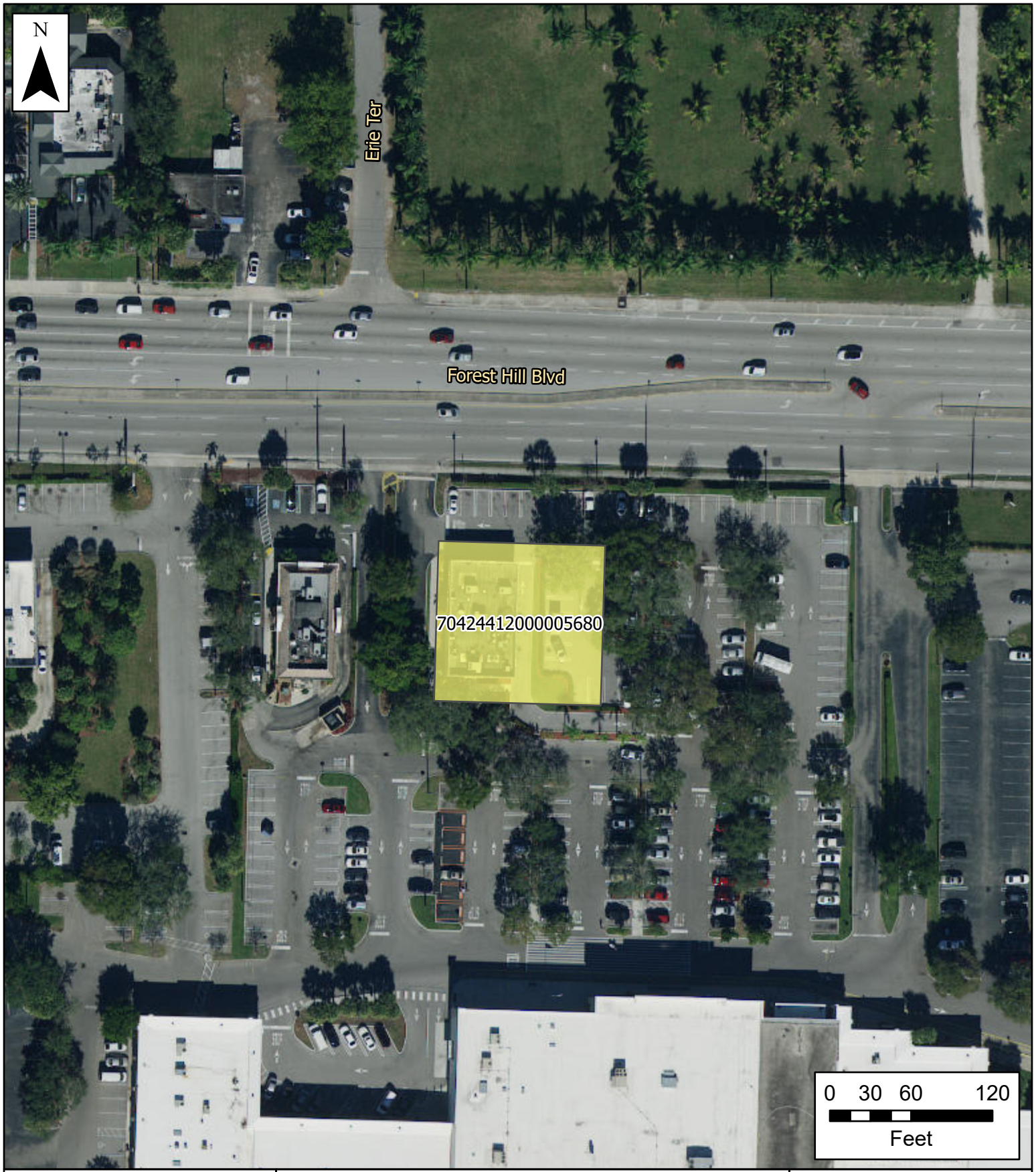


# Village of Palm Springs

## 4380 Forest Hill Blvd

Property Boundary

The Data is provided "as is" without warranty or any representation of accuracy, timeliness or completeness. The burden for determining accuracy, completeness, timeliness, merchantability and fitness for or the appropriateness for use rests solely on the requester. The Village of Palm Springs make no warranties, express or implied, as to the use of the licensed Data. There are no implied warranties of merchantability or fitness for a particular purpose. The requester acknowledges and accepts the limitations of the Data, including the fact that the Data is dynamic and is in a constant state of maintenance, correction and update

Data Source: Project boundary provided by Palm Beach County, World Imagery Basemap provided by ESRI Online Services.

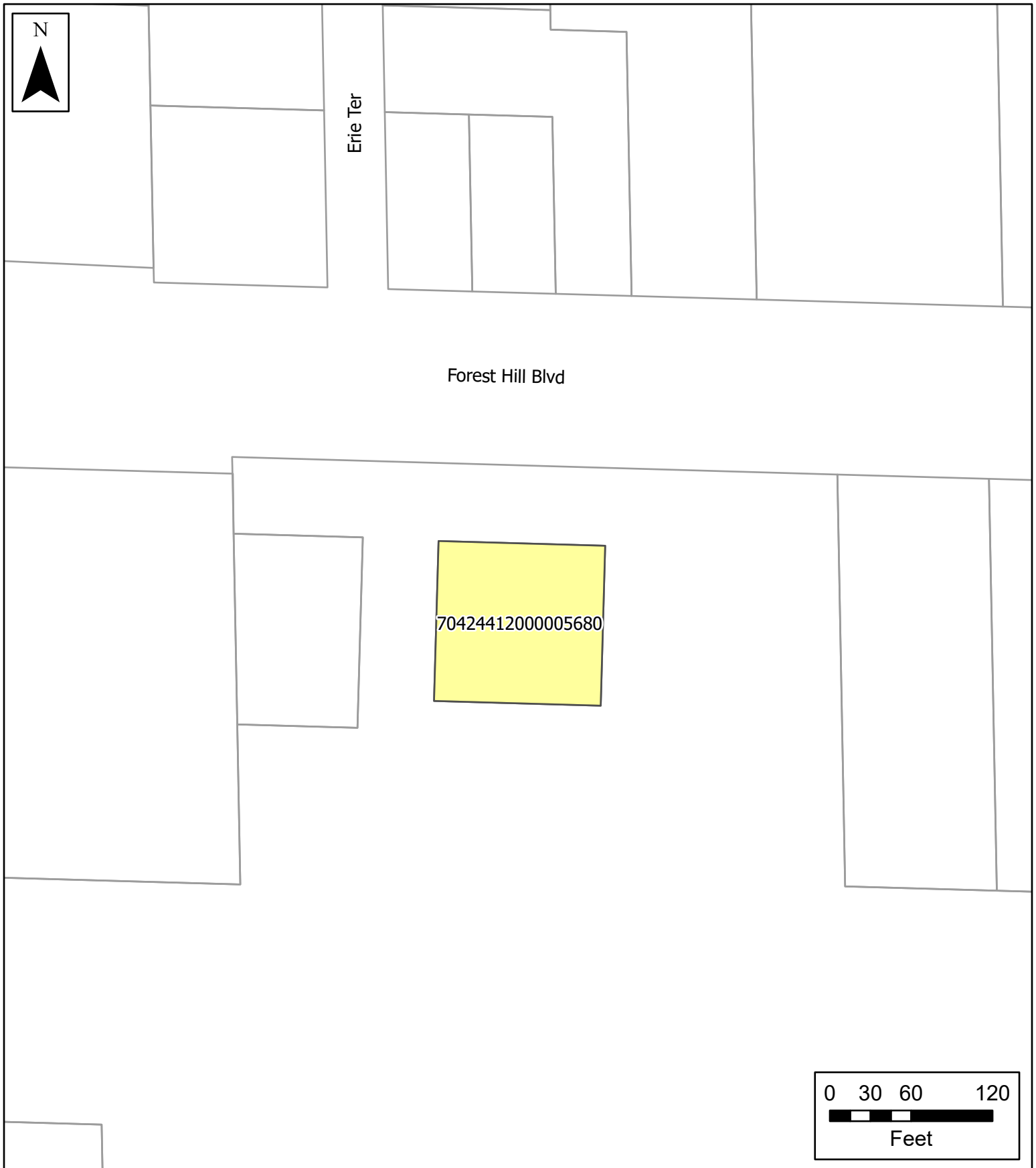


# Village of Palm Springs

## 4380 Forest Hill Blvd

Parcels

Property Boundary

The Data is provided "as is" without warranty or any representation of accuracy, timeliness or completeness. The burden for determining accuracy, completeness, timeliness, merchantability and fitness for or the appropriateness for use rests solely on the requester. The Village of Palm Springs make no warranties, express or implied, as to the use of the licensed Data. There are no implied warranties of merchantability or fitness for a particular purpose. The requester acknowledges and accepts the limitations of the Data, including the fact that the Data is dynamic and is in a constant state of maintenance, correction and update

Data Source: Parcels provided by Palm Beach County, World Imagery Basemap provided by ESRI Online Services.

Starbucks Observations 3.26.21

6:36 AM 11 cars

6:46 AM 10 cars
6:47 AM 11 cars

White SUV nine minutes
Blue Toyota seven minutes

6:54 AM 11 cars
6:57 AM 14 cars

7 AM 11 cars
Black car 8 minutes 20 seconds

7:05 AM 12 cars
7:08 AM 13 cars
7:09 AM 14 cars
7:10am 14 cars
7:11 AM 14 cars
7:14 AM 12 cars
7:15 AM 14 cars
7:17 AM 15 cars
7:19 AM 14 cars
Blue SUV 13 minutes

7:25 AM 11 cars

7:26 AM 10 cars

7:30 AM 11 cars

3 cars have gotten out of line deciding the queue was too long (and left site)

7:34 AM 12 cars
Black BMW eight minutes

7:37 AM 13 cars
7:40 AM 13 cars
7:42 AM 12 cars
7:45 AM 11 cars
7:48 AM 11 cars
Gray Kia nine minutes

7:51 AM 10 cars
7:54 AM 11 cars
7:55 AM 13 cars
7:56 AM 14 cars
Jeep SUV eight minutes 21 seconds

7:59 AM 15 cars
8:02 AM 14 cars

8:06 AM 13 cars
8:08 AM 13 cars
8:11 AM 14 cars
8:13 AM 16 cars
8:14 am 18 cars
Gray Kia eight minutes 39 seconds

8:17 AM 16 cars
8:18 AM 16 cars
8:22 AM 14 cars
8:24 AM 13 cars

**PUBLIC HEARING NOTICE**

Notice is hereby given that public hearings will be held on:

**Tuesday, April 13, 2021 at 6:30 p.m. by Planning & Zoning Board**
**Thursday, May 13, 2021 at 6:30 p.m. by the Village Council**
in the Village Hall Council Chambers at 226 Cypress Lane, Palm Springs, FL 33461
to consider:

**Site Plan Amendment and Special Exception Use**

An application submitted by Brian Plewinski ("Applicant"), for a Site Plan Amendment (**SPR21-05)** and concurrently requesting a Special Exception Use (**PSSE21-01)** to allow the conversion of the existing 3,357 square feet restaurant building into a coffee shop with drive thru and outdoor seating area, for the commercial general property located at 4380 Forest Hill Boulevard.

**Additional requested:**

**Thursday, May 13, 2021 at 6:30 p.m. by Village Council**
in the Village Hall Council Chambers at 226 Cypress Lane, Palm Springs, FL 33461
to consider:

**Hours of Operation Variance**

An application submitted by Brian Plewinski ("Applicant") for:

**PSV21-06** - Variance relief from Section 34-891(1) to allow business operation commence at 5:30 am instead of 7:00 am required.

All persons interested in these matters may appear at the times and place aforesaid and be heard. Prior to the meeting the application may be reviewed at the Village Clerk's Office.

If a person decides to appeal any decision made by the above Boards with respect to any matter considered at such hearings, he or she will need a record of the proceedings, and for such purpose may need to ensure that a verbatim record of the proceedings is made, which record includes the testimony and evidence upon which the appeal is to be based. Persons who need an accommodation in order to attend or participate in this meeting should contact the Village Clerk at (561) 965-4010 at least three (3) business days prior to the meeting in order to request such assistance.

VILLAGE OF PALM SPRINGS, FLORIDA
Publish: Kimberly M. Wynn, Village Clerk
Lake Worth Herald
April 1, 2021

# Village of Palm Springs

# Executive Brief

**AGENDA DATE:** May 13, 2021

**DEPARTMENT:** Administration

---

**ITEM 9.7:** Public Workshop: Extraordinary Circumstances Necessitating and Justifying Impact Fees for Law Enforcement and Parks & Recreation

**SUMMARY:** Recently adopted House Bill 337 amends Chapter 163.31801, Florida Statutes, pertaining to impact fees and places new requirements, retroactively to January 1, 2021, on local government when considering an increase in impact fee rates.

In general, the new legislation restricts increases in impact fees to no more than 50% in a four (4) year period, unless the local government:

1) Bases an increase in impact fee rates on needs established in a study,
2) Holds two publicly noticed workshops dedicated to the "extraordinary circumstances" necessitating the need to exceed the 50% threshold, and
3) Approves an impact fee ordinance by at least a two-thirds (2/3) vote.

Village consultants, Tindale Oliver, and Village staff find that Palm Springs has extraordinary circumstances for the consideration of an increase in Law Enforcement and Parks & Recreation impact fees:

- An increase in impact fee rates is justified in an Impact Fee Study prepared by Tindale Oliver dated March 18, 2021
- The Village has not increased impact fee rates since at least 2006 (over 15 years)
- Additional revenues are needed in order to maintain Village level of service standards for Law Enforcement and Parks & Recreation
- Alternatives to increasing impact fee rates include reduction of the level of service and/or using General Operating funds to cover capital costs associated with new growth and development
- The Village has annexed 629 acres (primarily of developed properties) since 2006,

which has brought additional demand on law enforcement services and parks and recreation facilities that necessitates investment in capital expenditures
- Capital investments are essential for law enforcement and parks and recreation to promote public health, safety and welfare of Village residents, businesses and property owners.

This is the first advertised public workshop to discuss the circumstances necessitating and justifying the need for increases in impact fee rates. A second public workshop has been advertised for June 10, 2021, and will be followed by consideration of proposed Ordinance No. 2021-03 - Village Code Amendment - Chapter 34 - Law Enforcement and Parks & Recreation Impact Fees.

**FISCAL IMPACT:**

The proposed, new impact fees would increase Village revenues to assist in supporting the requisite costs to provide the highest levels of policing and parks & recreation infrastructure and would be determined by the new growth that occurs within the Village.

Based on FY 2020 permit activity, the proposed, new impact fees are expected to generate approximately $7,537.12 and $18,304 for law enforcement and parks & recreation, respectively, within FY 2022.

**ATTACHMENTS:**

Impact Fee Study - Tindale Oliver - Final Report March 18, 2021
New Legislation - House Bill 337 - Impact Fees
Lake Worth Herald Advertisement on April 29, 2021 - Impact Fee Study Workshop

VILLAGE OF PALM SPRINGS Florida

Tindale Oliver
planning | design | engineering

# Village of Palm Springs Impact Fee Study

**Final Report**
**March 18, 2021**






Prepared for:

**Village of Palm Springs**
Development Services Department
226 Cypress Lane
Palm Springs, Florida 33461
ph (561) 965-4010

Prepared by:

**Tindale Oliver**
1000 N. Ashley Dr., Suite 400
Tampa, Florida 33602
ph (813) 224-8862
fax (813) 226-2106
E-mail: nkamp@tindaleoliver.com

# Village of Palm Springs
# Impact Fee Study

## Table of Contents


**I. INTRODUCTION ..... 1**

Methodology ..... 1

Legal Standard Overview ..... 2

**II. Law Enforcement ..... 5**

Facility Inventory ..... 5

Service Area and Demand Component ..... 7

Level of Service ..... 8

Cost Component ..... 9

Credit Component ..... 10

Net Law Enforcement Impact Cost ..... 12

Calculated Law Enforcement Impact Fee Schedule ..... 13

Law Enforcement Impact Fee Schedule Comparison ..... 15

**III. PARKS & RECREATION FACILITIES ..... 17**

Park Land and Recreation Facilities Inventory ..... 17

Service Area and Demand Component ..... 20

Level of Service ..... 20

Cost Component ..... 22

Credit Component ..... 26

Net Parks & Recreation Facilities Impact Cost ..... 29

Calculated Parks & Recreation Facilities Impact Fee Schedule ..... 30

Parks & Recreation Facilities Impact Fee Schedule Comparison ..... 31

**Appendices:**

**Appendix A:** Demand Component -- Population: Supplemental Information

**Appendix B:** Cost Component -- Building and Land Values: Supplemental Information

# I. Introduction

The Village of Palm Springs is the 12th largest municipality in Palm Beach County, with a population of approximately 24,000 permanent residents. Since 2000, the Village's population doubled primarily due to an aggressive annexation program. These annexations included improved residential and commercial properties as well as some vacant land. As the Village becomes more developed, the growth is starting to occur through redevelopment projects. To address capital infrastructure needs associated with new growth, the Village implemented law enforcement and parks and recreational facilities impact fees. At this time, to comply with the legislative requirements and to reflect most recent data, the Village is interested in updating its impact fee program.

The Village of Palm Springs has retained Tindale Oliver (TO) to prepare the technical study for these fees and this report serves as the technical study to support the calculation of the impact fees.

***Methodology***

In updating the Village's impact fee program, a consumption-based impact fee methodology is utilized, which is commonly used throughout Florida. A consumption-based impact fee charges new development based upon the burden placed on services from each land use (demand). The demand component is measured in terms of population per unit of development in the case of law enforcement and parks and recreational facilities impact fee areas.

A consumption-based impact fee charges new growth the proportionate share of the cost of providing additional infrastructure necessitated by and available for use by new growth. Unlike a "needs-based" approach, the consumption-based approach ensures that the impact fee is set at a rate that does not generate revenues at a level to correct existing deficiencies. As such, the Village does not need to go through the process of estimating the portion of each capacity expansion project that may be related to existing deficiencies. In addition, per legal requirements, a credit is subtracted from the total cost to account for the value of future tax contributions generated by new development toward any capacity expansion projects. In other words, case law requires that the new development should not be charged twice for the same service.

***Legal Standard Overview***

In Florida, legal requirements related to impact fees have primarily been established through case law since the 1980's. Impact fees must comply with the "dual rational nexus" test, which requires that they:

- Be supported by a study demonstrating that the fees are proportionate in amount to the need created by new development paying the fee; and
- Be spent in a manner that directs a proportionate benefit to new development, typically accomplished through establishment of benefit districts (if needed) and a list of capacity-adding projects included in the Capital Improvement Plans, Capital Improvement Elements, or another planning documents/Master Plans.

In 2006, the Florida legislature passed the "Florida Impact Fee Act," which recognized impact fees as "an outgrowth of home rule power of a local government to provide certain services within its jurisdiction." § 163.31801(2), Fla. Stat. The statute – concerned with mostly procedural and methodological limitations – did not expressly allow or disallow any particular public facility type from being funded with impact fees. The Act did specify procedural and methodological prerequisites, such as the requirement of the fee being based on most recent and localized data, a 90-day requirement for fee changes, and other similar requirements, most of which were common to the practice already.

More recent legislation further affected the impact fee framework in Florida, including the following:

- **HB 227 in 2009**: The Florida legislation statutorily clarified that in any action challenging an impact fee, the government has the burden of proving by a preponderance of the evidence that the imposition or amount of the fee meets the requirements of state legal precedent or the Impact Fee Act and that the court may not use a deferential standard.
- **SB 360 in 2009:** Allowed fees to be decreased without the 90-day notice period required to increase the fees and purported to change the standard of legal review associated with impact fees. SB 360 also required the Florida Department of Community Affairs (now the Department of Economic Opportunity) and Florida Department of Transportation (FDOT) to conduct studies on "mobility fees," which were completed in 2010.
- **HB 7207 in 2011:** Required a dollar-for-dollar credit, for purposes of concurrency compliance, for impact fees paid and other concurrency mitigation required.

- **HB 319 in 2013:** Applied mostly to concurrency management authorities, but also encouraged local governments to adopt alternative mobility systems using a series of tools identified in section 163.3180 (5)(f), Florida Statutes.
- **HB 207 in 2019:** Included the following changes to the Impact Fee Act along with additional clarifying language:
    1. Impact fees cannot be collected prior to building permit issuance; and
    2. Impact fee revenues cannot be used to pay debt service for previously approved projects unless the expenditure is reasonably connected to, or has a rational nexus with, the increased impact generated by the new residential and commercial construction.
- **HB 7103 in 2019:** Addressed multiple issues related to affordable housing/linkage fees, impact fees, and building services fees. In terms of impact fees, the bill required that when local governments increase their impact fees, the outstanding impact fee credits for developer contributions should also be increased. This requirement will operate prospectively. This bill also allowed local governments to waive/reduce impact fees for affordable housing projects without having to offset the associated revenue loss.
- **SB 1066 in 2020:** Added language allowing impact fee credits to be assignable and transferable at any time after establishment from one development or parcel to another that is within the same impact fee zone or impact fee district or that is within an adjoining impact fee zone or district within the same local government jurisdiction. In addition, added language indicating any new/increased impact fee not being applicable to current or pending permit applications submitted prior to the effective date of an ordinance or resolution imposing new/increased fees.
- **HB 1339 in 2020:** Requires reporting of various impact fee related data items within the annual financial audit report submitted to the Department of Financial Services.

The following paragraphs provide further detail on the generally applicable legal standards applicable here.

<u>Impact Fee Definition</u>

- An impact fee is a one-time capital charge levied against new development.
- An impact fee is designed to cover the portion of the capital costs of infrastructure capacity consumed by new development.
- The principal purpose of an impact fee is to assist in funding the implementation of projects identified in the Capital Improvements Element (CIE) and other capital improvement programs for the respective facility/service categories.

Impact Fee vs. Tax

- An impact fee is generally regarded as a regulatory function established based upon the specific benefit to the user related to a given infrastructure type and is not established for the primary purpose of generating revenue for the general benefit of the community, as are taxes.
- Impact fee expenditures must convey a proportional benefit to the fee payer. This is accomplished through the establishment of benefit districts as needed, where fees collected in a benefit district are spent in the same benefit district.
- An impact fee must be tied to a proportional need for new infrastructure capacity created by new development.

This technical report has been prepared to support legal compliance with existing case law and statutory requirements and documents the methodology used for impact fee calculations for each fee in the following sections, including an evaluation of the inventory, service area, level of service (LOS), cost, credit, and demand components. Information supporting this analysis was obtained through November 2020 from the Village and other sources, as indicated.

# II. Law Enforcement

This section discusses the analysis used in the update of the law enforcement impact fee. Several elements addressed in this section include:

- Facility Inventory
- Service Area and Demand Component
- Level of Service
- Cost Component
- Credit Component
- Net Impact Cost
- Calculated Impact Fee Schedule
- Impact Fee Schedule Comparison

These elements are summarized throughout this section.

***Facility Inventory***

The facility inventory for the Village's law enforcement services includes buildings, land, vehicles and equipment. According to information provided by the Village of Palm Springs, law enforcement building and land related capital assets include approximately 13,950 square feet of building space and 2.5 acres of land. Table II-1 presents this information.

Cost estimate for the police station is based primarily on insurance values, estimated cost figures for the police station expansion and cost information obtained from other jurisdictions. Land values are based on a review of current value of land where the existing station is located and estimated value of a parcel the Village is considering purchasing based on information obtained from the Palm Beach County Property Appraiser as well as vacant land sales and values of similarly sized parcels.

Based on this data and analysis, the building value is estimated at $300 per square foot and the land value is estimated at $250,000 per acre. These cost estimates result in a total building and land value of approximately $4.8 million, of which $4.2 million is for buildings and the remaining $625,000 is for land. A more detailed explanation of building and land value estimates is included in Appendix B.

**Table II-1**

**Law Enforcement Building and Land Inventory**

| Facility[1] | Address[1] | Square Footage[1] | Total Acres[1] | Building Value[2] | Land Value[3] | Total Building and Land Value[4] |
|---|---|---|---|---|---|---|
| Police Station | 230 Cypress Lane | 13,946 | 2.50 | $4,183,800 | $625,000 | $4,808,800 |
| **Building Value per Square Foot[5]** | | | | **$300** | | |
| **Land Value per Acre[6]** | | | | | **$250,000** | |

1) Source: Village of Palm Springs
2) Square footage (Item 1) multiplied by the estimated building value per square foot (Item 5)
3) Total acres (Item 1) multiplied by the land value per acre (Item 6)
4) Sum of building value (Item 2) and land value (Item 3)
5) Source: Appendix B
6) Source: Appendix B

In addition to land and buildings, the Village of Palm Springs law enforcement impact fee inventory includes the necessary vehicles and equipment required to perform law enforcement services. As presented in Table II-2, the total vehicle and equipment value is approximately $3.0 million.

**Table II-2**

**Law Enforcement Equipment and Vehicle Inventory [1]**

| Description[1] | Total Units[1] | Unit Value[2] | Total Value[1] |
|---|---|---|---|
| **Vehicles** | | | |
| Police Car | 55 | $42,289 | $2,325,900 |
| Truck | 3 | $22,500 | $67,500 |
| Van | 1 | $50,000 | $50,000 |
| **Total Vehicle Value** | | | **$2,443,400** |
| **Equipment** | | | |
| Taser Gun | 32 | $1,402 | $44,878 |
| Paraclete Rifle Shield | 4 | $5,187 | $20,748 |
| 800 Frequency Radio and Tower | 1 | $9,000 | $9,000 |
| Motorola Quantar Radio Repeater | 1 | $15,601 | $15,601 |
| Motorola Radio System Hardware | 1 | $121,342 | $121,342 |
| Thermal Imaging Camera | 1 | $5,619 | $5,619 |
| In-Camera System WI-FI Points | 1 | $5,478 | $5,478 |
| Watch Guard In-Car Camera System Server Setup | 1 | $10,650 | $10,650 |
| 911 Telephone Recording Unit | 1 | $12,180 | $12,180 |
| Cell Phone Reader | 1 | $9,350 | $9,350 |
| Canon DR-7550c Image Scanner | 1 | $5,000 | $5,000 |
| Live Scan Fingerprint Device & Child ID | 1 | $7,157 | $7,157 |
| Closed Circuit Television System | 1 | $20,000 | $20,000 |
| Bi-Directional Amplifer | 1 | $29,297 | $29,297 |
| Wanco Portable Light Tower | 1 | $7,600 | $7,600 |
| Wanco Solar Minimatrix Message Board | 1 | $19,150 | $19,150 |
| Motorola Apx7500 Consollete Control St | 1 | $6,417 | $6,417 |
| Recording System Intell Xeon Quad Core | 1 | $9,858 | $9,858 |
| Polaris Ranger UTV (Golf Cart) | 1 | $13,205 | $13,205 |
| Polaris Ranger Crew ATV | 1 | $11,774 | $11,774 |
| Speed Trailer Smart 850 | 1 | $10,705 | $10,705 |
| Radar Speed Trailer | 1 | $10,220 | $10,220 |
| Crash Zone Traffic System | 1 | $6,126 | $6,126 |
| Generac 2000 Diesel Generator-New PS Bldg | 1 | $46,400 | $46,400 |
| Dispatcher Workstation | 3 | $15,021 | $45,063 |
| Radio Consoles | 3 | $19,412 | $58,236 |
| Furniture | 1 | $8,567 | $8,567 |
| **Total Equipment Value** | | | **$569,621** |
| | | | |
| **Total Vehicle and Equipment Value** | | | **$3,013,021** |
| Number of Officers[3] | | | 49 |
| **Cost per Officer** | | | **$61,490** |

1) Source: Village of Palm Springs
2) Total value divided by number of units
3) Source: Village of Palm Springs

### *Service Area and Demand Component*

The Village of Palm Springs Police Department provides law enforcement services for the entire Village. As such, the proper benefit district for law enforcement is the entire Village. In this technical study, the current 2021 weighted and functional population estimates are used.

Because simply using weighted (permanent plus weighted seasonal) population estimates does not fully address daily workers and visitors who also benefit from law enforcement services, the "functional" weekly 24-hour population approach is used to establish a common unit of demand across different land uses. Functional population accounts for residents, visitors and workers traveling in and out of the Village throughout the day and calculates the presence of population at different land uses during the day, which represents the demand component of the impact fee equation. Appendix A provides further explanation of the population analysis and demand calculations.

***Level of Service***

Based on sworn officer counts provided by the Village of Palm Springs Police Department, as well as, population estimates produced in Appendix A, the current level of service (LOS) is calculated at 2.01 sworn officers per 1,000 weighted seasonal residents. Table II-3 presents the calculation of the existing LOS, which are used in the impact fee calculations assuming the Village will continue to provide this LOS in the future.

While the 2020 LOS is 2.01 sworn officers per 1,000 weighted seasonal residents, to calculate the law enforcement impact fee, the LOS needs to be calculated in terms functional residents. As shown, the current LOS of law enforcement services is 2.18 sworn officers per 1,000 functional residents, which is utilized in calculating the law enforcement impact fee for the Village of Palm Springs.

**Table II-3**

**Current Level of Service (2020)**

| Component | Year 2021 | |
|---|---|---|
| | Weighted Population | Functional Population |
| Population[(1)] | 24,435 | 22,495 |
| Number of Law Enforcement Officers[(2)] | 49 | 49 |
| Residents per Officer[(3)] | 499 | 459 |
| **LOS (officers per 1,000 residents)[(4)]** | **2.01** | **2.18** |

1) Source: Appendix A, Table A-1 for weighted population and Table A-7 for functional population
2) Source: Table II-2
3) Population (Item 1) divided by number of officers (Item 2)
4) Number of officers (Item 2) divided by the population (Item 1) and multiplied by 1,000

Table II-4 summarizes an LOS comparison between the Village of Palm Springs and other Florida cities. The LOS is displayed in terms of permanent population for all jurisdictions because a functional population analysis has not been completed for these entities. The LOS comparison is based on the permanent population for 2020 and number of officers reported in the 2019 FDLE Criminal Justice Agency Profile Report, as these are the most recent data available for all jurisdictions. As presented in this table, the Village of Palm Springs' LOS is in the lower-range of the communities reviewed.

**Table II-4**
**Level of Service Comparison (2020)**

| Jurisdiction | Service Area Population (2020)[1] | Number of Officers[2] | LOS (Officers per 1,000 Residents)[3] |
|---|---|---|---|
| Town of Jupiter | 63,188 | 114 | 1.80 |
| **Village of Palm Springs** | **23,867** | **49** | **2.05** |
| City of Palm Beach Gardens | 56,709 | 147 | 2.59 |
| City of Boca Raton | 95,139 | 201 | 2.11 |
| City of Boynton Beach | 78,495 | 145 | 1.85 |
| City of Delray Beach | 67,168 | 165 | 2.46 |
| Village of North Palm Beach | 12,813 | 44 | 3.43 |
| City of West Palm Beach | 116,781 | 292 | 2.50 |
| City of Riviera Beach | 36,057 | 124 | 3.44 |
| Town of Juno Beach | 3,463 | 14 | 4.04 |
| Town of Palm Beach | 8,409 | 64 | 7.61 |

1) Source: University of Florida, Bureau of Economic & Business Research (BEBR)
2) Source: FDLE Criminal Justice Agency Profile Report, 2019 for all jurisdictions except for the Village of Palm Springs. The officer figure for Palm Springs reflects the current count.
3) Permanent population (Item 1) divided by the number of officers (Item 2) and multiplied by 1,000

***Cost Component***

The cost component of the study evaluates the cost of all capital assets, including buildings, land and equipment/vehicles. Table II-5 provides a summary of all capital costs, which amounts to approximately $7.8 million or $160,000 per sworn officer.

In addition, Table II-5 also provides the impact cost per functional resident, which is calculated by multiplying the net asset value per sworn officer of $160,000 by the current achieved LOS

(sworn officers per 1,000 functional residents) of 2.18 and dividing by 1,000. As shown, this calculation results in law enforcement capital cost of $348 per functional resident.

**Table II-5**

**Total Impact Cost per Functional Resident**

| Component | Cost | Percent of Total Value[8] |
|---|---|---|
| Building Value[1] | $4,183,800 | 53.5% |
| Land Value[1] | $625,000 | 8.0% |
| Vehicle and Equipment Value[2] | $3,013,021 | 38.5% |
| **Total Asset Value[3]** | **$7,821,821** | **100.0%** |
| Number of police Officers[4] | 49 | |
| **Total Asset Value per Officer[5]** | **$159,629** | |
| Level-of-Service (Officers/1,000 Functional Residents)[6] | 2.18 | |
| **Total Impact Cost per Functional Resident[7]** | **$347.99** | |

1) Source: Table II-1
2) Source: Table II-2
3) Sum of building, land, and vehicle and equipment value (Items 1 and 2)
4) Source: Table II-2
5) Total asset value (Item 3) divided by the number of police officers (Item 4)
6) Source: Table II-3
7) Total asset value per officer (Item 5) multiplied by the LOS (Item 6) divided by 1,000
8) Distribution of building, land, and vehicle/equipment values as part of the total asset value

***Credit Component***

To avoid overcharging new development, a review of the capital funding allocation for law enforcement services is completed. The purpose of this review is to determine any potential revenues generated by future development that is likely to be used for capital facilities, land, vehicle, and equipment expansion of the law enforcement program. Revenue credits are then applied against the total impact cost per functional resident so that new development is not charged twice for capital revenue contributions used to expand the law enforcement program.

Capital Expansion Credit

To calculate the capital expansion credit per functional resident, funding sources used for historical and future programmed capacity projects are reviewed. Between 2016 and 2025, the Village of Palm Springs allocated an average non-impact fee funding of $172,000 per year toward law enforcement capital facilities utilizing General Fund and Sales Tax revenues. The annual capital expansion expenditures were divided by the average annual functional residents for the

same period to calculate the average annual capital expansion credit per functional resident. As presented in Table II-6, the result is $7.63 per functional resident per year.

Once the revenue credit per population is calculated, a credit adjustment is needed for the portion of the revenue credit funded with ad valorem tax revenues, which is approximately 5 percent of the cash funding. This adjustment accounts for the fact that new homes tend to pay higher property taxes per dwelling unit than older homes and was estimated based on a comparison of the average taxable value of newer homes to that of all homes. As presented, the adjusted revenue credit per population amounts to $7.90 per year.

**Table II-6**

**Capital Expansion Credit**

| Description[1] | Funding Source | FY 2016-2020 | FY 2021-2025 | Total (FY 2016-2025) |
|---|---|---|---|---|
| Machinery and Equipment | General Fund | $184,784 | | $184,784 |
| Vehicles | General Fund | $160,000 | | $160,000 |
| Police Station Expansion | Sales Tax | | $1,375,000 | $1,375,000 |
| | | | | |
| Total Capital Expansion Expenditures | | | | $1,719,784 |
| Annual Capital Expansion Expenditures[2] | | | | $171,978 |
| Average Functional Population (FY 2016-2025)[3] | | | | 22,554 |
| **Annual Capital Expansion Expenditure per Functional Resident[4]** | | | | **$7.63** |
| Portion of Capital Expansion Projects Funded with Ad Valorem Tax Revenues[5] | | | | **5%** |
| Portion Funded with Ad-Valorem Tax Revenues[6] | | | | $0.38 |
| Credit Adjustment Factor for Residental Land Uses[7] | | | | 1.70 |
| Residential Land Uses - Adjusted Annual Capital Improvement Credit per Functional Resident[8] | | | | $0.65 |
| Portion Funded with Other Sources[9] | | | | $7.25 |
| **Residential Land Uses: Total Capital Expansion Credit per Functional Resident[10]** | | | | **$7.90** |

1) Source: Village of Palm Springs
2) Average capital expenditures over the 10-year period
3) Source: Appendix A, Table A-7
4) Annual capital expansion expenditures (Item 2) divided by the average annual functional population (Item 3)
5) Portion of total capital expansion expenditures funded by ad valorem tax revenue
6) Annual capital expansion expenditure per functional resident (Item 4) multiplied by the portion of capital expansion projects funded with ad valorem tax revenues (Item 5)
7) Adjustment factor to reflect higher ad valorem taxes paid by new homes
8) Portion funded with ad valorem tax revenues (Item 6) multiplied by the credit adjustment factor (Item 7)
9) Capital expansion expenditures per functional resident (Item 4) less portion funded with ad-valorem tax revenues (Item 6)
10) Adjusted capital expansion expenditures per functional resident (Item 8) plus the portion funded with other revenue sources (Item 9)

Debt Service Credit

Any outstanding bond issues related to the law enforcement also will result in a credit to the impact fee. The Village of Palm Springs used bond proceeds for the construction of the police station. The remaining debt service payments are divided by the population during the same period to determine the debt service credit per resident. Table II-7 presents these calculations.

**Table II-7**

**Debt Service Credit**

| Description[1] | Funding Source[1] | Present Value of Payments Remaining[1] | Avg Annual Functional Population During Remaining Debt Service Period[2] | Credit per Resident[3] |
|---|---|---|---|---|
| General Obligation Bond, Portion Associated with Construction of Police Station | General Fund | $1,135,239 | 23,780 | $47.74 |
| **Total Debt Service Credit per Functional Resident** | | | | **$47.74** |
| Portion Funded with Ad Valorem Tax Revenues[4] | | | | 23% |
| Total Debt Service Credit per Functional Resident Paid with Ad Valorem Tax Revenues[5] | | | | $10.98 |
| Adjustment Factor for Residential Land Uses[6] | | | | 1.70 |
| Adjusted Portion of the Debt Service Credit for Residential Land Uses[7] | | | | $18.67 |
| Portion Funded with Other Sources[8] | | | | $36.76 |
| Total Debt Service Credit for Residential Land Uses[9] | | | | **$55.43** |

1) Source: Village of Palm Springs
2) Source: Appendix A, Table A-7
3) Present value of payments remaining (Item 1) divided by average annual functional population (Item 2)
4) Portion of total debt service expenditures funded by ad valorem tax revenue based on portion of General Fund funded with ad valorem taxes
5) Total debt service credit per functional resident multiplied by the portion funded with ad valorem tax revenues (Item 4)
6) Adjustment factor to reflect higher ad valorem taxes paid by new homes
7) Total debt service credit per functional resident paid with ad valorem tax revenues (Item 5) multiplied by the credit adjustment factor (Item 6)
8) Total debt service credit per functional resident less the portion paid with ad valorem tax revenues (Item 5)
9) Sum of the adjusted portion of the debt service credit for residential land uses (Item 7) and the portion funded with other sources (Item 8)

### *Net Law Enforcement Impact Cost*

The net impact cost per resident is the difference between the cost component and the credit component. Table II-8 summarizes the calculation of the net impact cost which amounts to approximately $144 per functional resident for residential land uses and $156 per functional resident for non-residential land uses.

**Table II-8**

**Net Impact Cost**

| Impact Cost / Credit Element | Per Functional Resident |
|---|---|
| ***Impact Cost*** | |
| Total Impact Cost[1] | $347.99 |
| ***Revenue Credit*** | |
| Annual Capital Expansion "Cash" Credit per Functional Resident[2] | |
| - Residential | $7.90 |
| - Non-residential | $7.63 |
| *Capitalization Rate* | 2.3% |
| *Capitalization Period (in years)* | 25 |
| Capital Expansion "Cash" Credit per Functional Resident[3] | |
| - Residential | $148.94 |
| - Non-residential | $143.85 |
| | |
| Debt Service Credit[4] | |
| - Residential | $55.43 |
| - Non-residential | $47.74 |
| | |
| Total Revenue Credit[5] | |
| - Residential | $204.37 |
| - Non-residential | $191.59 |
| ***Net Impact Cost[6]*** | |
| **- Residential** | **$143.62** |
| **- Non-residential** | **$156.40** |

1) Source: Table II-5
2) Source: Table II-6
3) Average annual capital improvement credit (Item 2) for a capitalization rate of 2.3% over 25 years
4) Source: Table II-7
5) Sum of total capital improvement credit (Item 3) and total debt service credit (Item 4)
6) Total impact cost (Item 1) less total revenue credit (Item 5)

### *Calculated Law Enforcement Impact Fee Schedule*

Table II-9 presents the calculated law enforcement impact fee schedule scenarios for the Village of Palm Springs for both residential and non-residential land uses, based on the net impact cost per functional resident previously presented in Table II-8.

## Table II-9

## Calculated Village of Palm Springs Law Enforcement Impact Fee Schedule

| ITE LUC | Land Use | Impact Unit | Functional Population Coefficient[1] | Net Impact Fee per Unit[2] | Current Adopted Fee[3] | Percent Change[4] |
|---|---|---|---|---|---|---|
| ***Residential:*** | | | | | | |
| 210 | Single Family (detached/attached) | | | | | |
| | - Less than 1,500 sf | du | 1.89 | $271.44 | $131.80 | 106% |
| | - 1,500 to 2,499 sf | du | 2.10 | $301.60 | $131.80 | 129% |
| | - 2,500 sf or more | du | 2.35 | $337.51 | $131.80 | 156% |
| 220/230 | Multi-Family (Apartment/Condo): | du | 1.39 | $199.63 | $131.80 | 52% |
| 240 | Mobile Home | du | 1.67 | $239.85 | $131.80 | 82% |
| 251 | Senior Housing (Detached) | du | 1.60 | $229.79 | $131.80 | 74% |
| 252 | Senior Housing (Attached) | du | 1.06 | $152.24 | $131.80 | 16% |
| ***Transient, Assisted, Group:*** | | | | | | |
| 253 | Congregate Care Facility | du | 1.33 | $208.01 | N/A | N/A |
| 254 | Assisted Living Facility | bed | 0.93 | $145.45 | N/A | N/A |
| 310 | Hotel | room | 0.98 | $153.27 | N/A | N/A |
| 320 | Motel | room | 0.81 | $126.68 | N/A | N/A |
| 620 | Nursing Home | bed | 1.09 | $170.48 | N/A | N/A |
| ***Recreational:*** | | | | | | |
| 430 | Golf Course | hole | 0.84 | $131.38 | N/A | N/A |
| 444 | Movie Theater | screen | 5.19 | $811.72 | N/A | N/A |
| ***Institutions:*** | | | | | | |
| 520 | Elementary School (Private) | student | 0.08 | $12.51 | N/A | N/A |
| 522 | Middle School (Private) | student | 0.09 | $14.08 | N/A | N/A |
| 530 | High School (Private) | student | 0.09 | $14.08 | N/A | N/A |
| 540 | University/Junior College (7,500 or fewer students) (Private) | student | 0.10 | $15.64 | N/A | N/A |
| 550 | University/Junior College (more than 7,500 students) (Private) | student | 0.08 | $12.51 | N/A | N/A |
| 560 | Church | 1,000 sf | 0.37 | $57.87 | N/A | N/A |
| 565 | Day Care Center | 1,000 sf | 0.81 | $126.68 | N/A | N/A |
| ***Medical*** | | | | | | |
| 610 | Hospital | 1,000 sf | 1.29 | $201.76 | $49.45 | 308% |
| 630 | Clinic | 1,000 sf | 1.82 | $284.65 | $49.45 | 476% |
| ***Office:*** | | | | | | |
| 710 | General Office | 1,000 sf | 0.89 | $139.20 | $56.53 | 146% |
| 720 | Medical Office 10,000 sq ft or less | 1,000 sf | 1.20 | $187.68 | $49.45 | 280% |
| 720 | Medical Office greater than 10,000 sq ft | 1,000 sf | 1.72 | $269.01 | $49.45 | 444% |
| ***Retail:*** | | | | | | |
| 820 | Shopping Center/Retail | 1,000 sfgla | 1.51 | $236.16 | $44.45 | 431% |
| 840/841 | New/Used Auto Sales | 1,000 sf | 1.57 | $245.55 | $44.45 | 452% |
| 850 | Supermarket | 1,000 sf | 2.41 | $376.92 | $44.45 | 748% |
| 880/881 | Pharmacy/Drug Store with & without Drive-Thru | 1,000 sf | 1.85 | $289.34 | $44.45 | 551% |
| 890 | Furniture Store | 1,000 sf | 0.32 | $50.05 | $44.45 | 13% |
| ***Services:*** | | | | | | |
| 911 | Bank/Savings Walk-In | 1,000 sf | 1.03 | $161.09 | $44.45 | 262% |
| 912 | Bank/Savings Drive-In | 1,000 sf | 1.49 | $233.04 | $44.45 | 424% |
| 931 | Quality Restaurant | 1,000 sf | 5.76 | $900.86 | $44.45 | 1927% |
| 932 | High-Turn Over Restaurant | 1,000 sf | 5.57 | $871.15 | $44.45 | 1860% |
| 934 | Fast Food Restaurant w/Drive-Thru | 1,000 sf | 9.70 | $1,517.08 | $44.45 | 3313% |
| 942 | Automobile Care Center | 1,000 sf | 1.67 | $261.19 | $44.45 | 488% |
| 944 | Gas Station w/Convenience Market <2,000 sq ft | fuel pos. | 1.46 | $228.34 | N/A | N/A |
| 945 | Gas Station w/Convenience Market 2,000-2,999 sq ft | fuel pos. | 1.78 | $278.39 | N/A | N/A |
| 960 | Gas Station w/Convenience Market 3,000+ sq ft | fuel pos. | 2.02 | $315.93 | N/A | N/A |

**Table II-9 (Continued)**
**Calculated Village of Palm Springs Law Enforcement Impact Fee Schedule**

| ITE LUC | Land Use | Impact Unit | Functional Population Coefficient[1] | Net Impact Fee per Unit[2] | Current Adopted Fee[3] | Percent Change[4] |
|---|---|---|---|---|---|---|
| ***Industrial:*** | | | | | | |
| 110 | General Light Industrial | 1,000 sf | 0.50 | $78.20 | $9.34 | 737% |
| 140 | Manufacturing | 1,000 sf | 0.46 | $71.94 | $9.34 | 670% |
| 150 | Warehousing | 1,000 sf | 0.11 | $17.20 | $9.34 | 84% |
| 151 | Mini-Warehouse | 1,000 sf | 0.04 | $6.26 | $9.34 | -33% |
| 154 | High-Cube Transload/Storage | 1,000 sf | 0.09 | $14.08 | $9.34 | 51% |

1) Source: Appendix A, Table A-8 for residential land uses and Appendix A, Table A-9 for non-residential land uses
2) Source: Net impact cost per functional resident from Table II-8 is multiplied by the functional population coefficient for each land use
3) Source: Village of Palm Springs
4) Change from the current fee to calculated fee

N/A – Indicates a new land use or different impact unit

## Law Enforcement Impact Fee Schedule Comparison

As part of the work effort in updating the Village of Palm Springs's law enforcement impact fee schedule, the Village's calculated impact fees for select land uses were compared to the adopted fee schedules of several Florida cities. Table II-10 presents this comparison.

## Table II-10

## Law Enforcement IF Schedule Comparison

| Land Use | Unit[2] | Village of Palm Springs | | Cooper City [5] | Dania Beach [6] | Davie[7] | Hallandale Beach[8] | Miramar[9] | Palm Beach Gardens[10] | Palm Beach Shores [11] |
|---|---|---|---|---|---|---|---|---|---|---|
| | | Calculated[3] | Adopted[4] | | | | | | | |
| Date of Last Update | | 2021 | N/A | 1990 | 2005 | 2009 | 2019 | 2016 | 2015 | 2005 |
| Assessed Portion of Calculated[1] | | N/A | N/A | 100% | 100% | 100% | N/A | 74% | 100% | N/A |
| ***Residential:*** | | | | | | | | | | |
| Single Family (1,600 sq ft) | du | $302 | $132 | $91 | $294 | $307 | $380 | $543 | $307 | $560 |
| Multi-Family (1,300 sq ft) | du | $200 | $132 | $91 | $239 | $114 | $218 | $543 | $252 | $455 |
| ***Non-Residential:*** | | | | | | | | | | |
| Light Industrial | 1,000 sf | $78 | $9 | $37 | $184 | $48 | $92 | $420 | $179 | $350 |
| Office (50,000 sq ft) | 1,000 sf | $139 | $57 | $37 | $184 | $300 | $167 | $420 | $365 | $350 |
| Retail (125,000 sq ft) | 1,000 sfgla | $236 | $44 | $37 | $184 | $300 | $290 | $420 | $596 | $350 |
| Bank w/Drive-Thru | 1,000 sf | $233 | $44 | $37 | $184 | $300 | $288 | $420 | $591 | $350 |
| Fast Food w/Drive-Thru | 1,000 sf | $1,517 | $44 | $37 | $184 | $300 | $1,750 | $420 | $2,307 | $350 |

1) Represents the portion of the maximum calculated fee for each respective county that is actually charged. Fee may have been lowered/increased through annual indexing or policy discounts. Does not account for moratorium/suspensions.
2) du = dwelling unit
3) Source: Table II-9
4) Source: Village of Palm Springs
5) Source: Cooper City Code of Ordinances, Chapter 22 Planning and Public Facilities, Article IV. Impact Fees, Sec. 22-65. Fee shown is "Public Safety Improvements" fee, which includes a combined police and fire. services fee.
6) Source: City of Dania Beach Document Center. Fee is $.389 per sq. ft. for residential and commercial.
7) Source: Town of Davie Planning and Zoning Department. Less than 10 units per parcel fee shown as a proxy for multi-family.
8) Source: Tindale Oliver 2019 City of Hallandale Beach Impact Fee Study. Fees shown represent maximum calculated law enforcement impact fees. Fees shown are not yet adopted. Multi-family 3 to 9 units utilized as a proxy for multi-family.
9) Source: City of Miramar Community and Economic Development Department
10) Source: Palm Beach Gardens Unified Services.
11) Source: Palm Beach Shores Code of Ordinances, Chapter 28 - Finance, Article III - Impact Fees, Sec. 28-46

# III. Parks & Recreation Facilities

This section addresses the analysis used in developing the parks and recreation impact fee. Several elements addressed in the section include:

- Park Land and Recreation Facilities Inventory
- Service Area and Demand Component
- Level of Service
- Cost Component
- Credit Component
- Net Impact Cost
- Calculated Impact Fee Schedule
- Impact Fee Schedule Comparison

These elements are summarized throughout this section.

***Park Land and Recreation Facilities Inventory***

Based on information provided by the Village of Palm Springs, the Village's land and recreation facilities inventory utilized for impact fee purposes includes 11 parks totaling approximately 38 acres. The inventory excludes park land that is not owned by the Village's and parks that are operated by another entity and/or generate revenue. Table III-1 presents a summary of the inventory included in the parks and recreation facilities impact fee.

## Table III-1

## Park Land and Recreation Facility Inventory

| Park Name[1] | Classification | Acres | Buildings | | Courts | | | | | | Fields | |
|---|---|---|---|---|---|---|---|---|---|---|---|---|
| | | | Leisure Activities | Teen Center | Basketball (lit) | Futsal (lit) | Pickleball (lit) | Sand Volleyball (lit) | Sand Volleyball (unlit) | Tennis (lit) | Baseball/ Softball (lit) | Multi-Purpose |
| Village Athletic Center Complex | Community | 18.00 | 4,380 | 950 | 2 | 1 | 2 | 1 | | 2 | 2 | 1 |
| Christmas Palm Park | Neighborhood | 0.28 | | | | | | | | | | |
| Frost Lake Park | Neighborhood | 4.60 | | | | | | | | | | |
| Greenbrier Park | Neighborhood | 0.39 | | | | | | | | | | |
| Lakewood Gardens Park | Neighborhood | 2.30 | | | 1 | | | | 1 | | | |
| Royal Palm Park | Neighborhood | 2.30 | | | | | | | | | | |
| Sabal Palm Park | Neighborhood | 2.00 | | | | | | | | | | 1 |
| Sago Palm Park | Community | 3.50 | | | | | | | | | | |
| Foxtail Palm Park | Neighborhood | 3.30 | | | | | | | | | | |
| Areca Palm Park | Neighborhood | 0.77 | | | | | | | | | | |
| Ponytail Palm Park | Neighborhood | 0.21 | | | | | | | | | | |
| **Total** | | **37.65** | **4,380** | **950** | **3** | **1** | **2** | **1** | **1** | **2** | **2** | **2** |

| Summary | Count | Acres | Leisure Activities | Teen Center | Basketball (lit) | Futsal (lit) | Pickleball (lit) | Sand Volleyball (lit) | Sand Volleyball (unlit) | Tennis (lit) | Baseball/ Softball (lit) | Multi-Purpose |
|---|---|---|---|---|---|---|---|---|---|---|---|---|
| **Total** | **11** | **37.65** | **4,380** | **950** | **3** | **1** | **2** | **1** | **1** | **2** | **2** | **2** |
| Neighborhood | 9 | 16.15 | 0 | 0 | 1 | 0 | 0 | 0 | 1 | 0 | 0 | 1 |
| Community | 2 | 21.50 | 4,380 | 950 | 2 | 1 | 2 | 1 | 0 | 2 | 2 | 1 |

## Table III -1 (Continued)

## Park Land and Recreation Facility Inventory

| Park Name[1] | Classification | Acres | Fishing Pier | Miniature Golf Course | Parking Spaces | Pavilion | Playground | Restrooms (square feet) | Trail: Paved (miles) | Wooden Gazebo |
|---|---|---|---|---|---|---|---|---|---|---|
| Village Athletic Center Complex | Community | 18.00 | | | 340 | 1 | 1 | 320 | | |
| Christmas Palm Park | Neighborhood | 0.28 | | | | | | | | |
| Frost Lake Park | Neighborhood | 4.60 | 1 | | | | | | 0.33 | |
| Greenbrier Park | Neighborhood | 0.39 | | | | | | | | |
| Lakewood Gardens Park | Neighborhood | 2.30 | | | | | 1 | | | |
| Royal Palm Park | Neighborhood | 2.30 | | | 10 | | 1 | | | |
| Sabal Palm Park | Neighborhood | 2.00 | | | 43 | | | 126 | | |
| Sago Palm Park | Community | 3.50 | 1 | | 9 | 1 | 1 | 960 | | 1 |
| Foxtail Palm Park | Neighborhood | 3.30 | | | 6 | 1 | 1 | | 0.12 | |
| Areca Palm Park | Neighborhood | 0.77 | | 1 | 20 | | | | | |
| Ponytail Palm Park | Neighborhood | 0.21 | | | 5 | | | | | |
| **Total** | | **37.65** | **2** | **1** | **433** | **3** | **5** | **1,406** | **0.45** | **1** |

| Summary | Count | Acres | Fishing Pier | Miniature Golf Course | Parking Spaces | Pavilion | Playground | Restrooms (square feet) | Trail: Paved (miles) | Wooden Gazebo |
|---|---|---|---|---|---|---|---|---|---|---|
| **Total** | **11** | **37.65** | **2** | **1** | **433** | **3** | **5** | **1,406** | **0.45** | **1** |
| Neighborhood | 9 | 16.15 | 1 | 1 | 84 | 1 | 3 | 126 | 0.45 | 0 |
| Community | 2 | 21.50 | 1 | 0 | 349 | 2 | 2 | 1,280 | 0.00 | 1 |

1) Source: Village of Palm Springs

***Service Area and Demand Component***

The Village-owned parks are utilized village-wide, and therefore, the village-wide service area and population are used in the calculation of parks and recreational facilities impact fee. Appendix A, Table A-1, provides the estimated population for 2021 and the projected population through 2045. Parks and recreation impact fees are charged only to residential land uses. As such, the permanent population per housing unit is used to measure demand from each residential land use, which is presented in Appendix A.

***Level of Service***

The current LOS for all Village of Palm Springs-owned and maintained parks is presented in Table III-2. To determine the current LOS, the total acreage of each park type is divided by the Village's population for 2021 and multiplied by 1,000. As shown, the current LOS for neighborhood parks is 0.68 acres per 1,000 residents while the adopted LOS standard is 0.50 acres per 1,000 residents. In the case of community parks, the achieved LOS is 0.91 acres per 1,000 residents while the adopted LOS standard is 1.50 acres per 1,000 residents. While the achieved LOS indicates the investment made by the community, the adopted LOS standard provides the intended/goal LOS. For impact fee calculation purposes, the lower of the two measures are used to ensure new development is not being charged at a level above what the existing community invested to date or intend to provide in the future. This approach results in the use of adopted LOS standard for neighborhood parks and the use of current LOS for the community parks, for a total of 1.41 acres per 1,000 residents.

**Table III -2**
**Current Level of Service (2021)**

| Park Type Classification | Inventory (Acres)[1] | Current LOS[2] | Adopted LOS Standard[3] | LOS Used in Calculations[4] |
|---|---|---|---|---|
| Neighborhood | 16.15 | 0.68 | 0.50 | **0.50** |
| Community | 21.50 | 0.91 | 1.50 | **0.91** |
| **Total** | **37.65** | **1.59** | **2.00** | **1.41** |
| | | | | |
| 2021 Permanent Population[5] | | | 23,720 | |

1) Source: Table III-1
2) Source: Acres for each park type (Item 1) divided by 2021 population (Item 5) multiplied by 1,000
3) Source: Village of Palm Springs, Recreation and Open Space Level of Service
4) Used lower of the current LOS vs. adopted LOS standard
5) Source: Appendix A, Table A-10 for permanent population

Table III-3 presents a comparison of the parks and recreation adopted LOS standards of other select Florida cities to the Village of Palm Springs' adopted LOS standard in terms of acreage per population. As shown, the Village's current LOS is in the lower end of the range of the adopted LOS standards of the other jurisdictions reviewed.

**Table III -3**

**Level of Service Comparison (Adopted)**

| Jurisdiction | LOS Standard (Acres per 1,000 Residents) |
|---|---|
| **Village of Palm Springs[1]** | **2.00** |
| Boynton Beach[2] | 2.50 |
| Lake Worth[3] | 2.50 |
| Greenacres[4] | 3.00 |
| Riviera Beach[5] | 3.00 |
| Lantana[6] | 3.14 |
| North Palm Beach[7] | 4.00 |
| Palm Beach Gardens[8] | 5.00 |
| Town of Palm Beach[9] | 6.00 |
| Village of Royal Palm Beach[10] | 10.00 |
| | |
| **Average (excluding VPS)** | **4.35** |

1) Source: Village of Palm Springs Comprehensive Plan, Recreation and Open Space Element, Policy A.6
2) Source: City of Boynton Beach, Comprehensive Plan, Recreation and Open Element, Objective 5.3.1
3) Source: City of Lake Worth Comprehensive Plan, Recreation and Open Space Element, Policy 7.1.1.9.
4) Source: City of Greenacres Comprehensive Plan, Chapter 5, Provision of Parks and Facilities, Objective 1.
5) Source: City of Riviera Beach Comprehensive Plan, Recreation and Open Space Element, Policy 1.2.2.
6) Source: Town of Lantana Comprehensive Plan 2017, Recreation and Open Space Element, Policy Rec 1.2.1.
7) Source: Village of North Palm Beach Comprehensive Plan, Recreation and Open Space Element, Table 9-1.
8) Source: City of Palm Beach Gardens Comprehensive Plan, Recreation and Open Space Element, Policy 7.1.1.1.
9) Source: Town of Palm Beach Comprehensive Plan, Recreation/Open Space Element, Table VI-4 Level of Service for Recreation and Open Space Acreage 2010 - 2025.
10) Source: Village of Royal Palm Beach Comprehensive Plan, Recreation and Open Space Element, Policy ROS-1.1.4.

***Cost Component***

The capital cost associated with parks and recreation facilities consists of two components: the cost of recreational facilities located at each park and the cost of purchasing and developing land for each park. The following paragraphs address park land and recreation facility value estimates.

Land Cost

The park land value per acre for the Village's park inventory is calculated based on upcoming park land purchase cost estimates, value of current park land, vacant land sales of similar size parcels over the past four years, and value of similar size vacant parcels based on information obtained from the Palm Beach County Property Appraiser's database. This analysis resulted in an estimated average land value of $250,000 per acre as presented in Table III-4. Appendix B provides further detail regarding the calculation of the land value.

The cost of land for parks and recreation facilities includes more than just the purchase cost of the land. Landscaping, site improvement, and parking costs are also considered. These costs can vary greatly, depending on the type of park. Based on information provided by the Village and other Florida jurisdictions, the cost for landscaping, site preparation, and parking is estimated at $10,000 per acre. The total land cost of $260,000 per acre translates into land value of $367 per resident based on the LOS of 1.41 acres per 1,000 residents.

**Table III -4**

**Land Value per Resident**

| Variable/Calculation Step | Park Land Value |
|---|---|
| ***Land Value:*** | |
| Land Purchase Cost per Acre[(1)] | $250,000 |
| Landscaping, Site Preparation & Irrigation Cost per Acre[(2)] | $10,000 |
| Total Land Cost per Acre[(3)] | $260,000 |
| Achieved LOS/Adopted LOS Standard[(4)] | 1.41 |
| **Total Land Value per Weighted Resident[(5)]** | **$366.60** |

1) Source: Appendix B
2) Source: Information provided by the Village of Palm Springs and other Florida jurisdictions
3) Sum of land purchase cost per acre (Item 1) and landscaping, site preparation, and irrigation cost per acre (Item 2)
4) Source: Table III-3
5) Total land cost per acre (Item 3) multiplied by total acres (Item 4) divided by 1,000

Recreational Facility Value

To estimate current recreational facility value, multiple sources were reviewed to determine the unit cost of each recreational facility type, including insured values of the facilities, recent cost information obtained for similar facilities from other jurisdictions and input from the Village of Palm Springs representatives.

In addition to the construction cost of recreational facilities, the architectural, engineering and inspection (AE&I) costs associated with developing this infrastructure are also included. The AE&I cost is estimated at 9 percent of the construction cost based on estimates obtained from the Village of Palm Springs. This percentage is also consistent with information obtained from other jurisdictions and industry standards.

As shown in Table III-5, the total recreational facility value for all parks is $4.5 million, which equates to an average of $120,000 per acre and $190 per resident.

.

## Table III -5

## Recreational Facility Value

| Description | Unit | Unit Cost[1] | Inventory Count by Park Type[2] | | | Total Value by Park Type[3] | | |
|---|---|---|---|---|---|---|---|---|
| | | | Neighborhood | Community | All | Neighborhood | Community | All |
| ***Buildings*** | | | | | | | | |
| Leisure Activities | sq. ft. | $200 | 0 | 4,380 | 4,380 | $0 | $876,000 | $876,000 |
| Teen Center | sq. ft. | $100 | 0 | 950 | 950 | $0 | $95,000 | $95,000 |
| ***Courts*** | | | | | | | | |
| Basketball (lit) | sq. ft. | $85,000 | 1 | 2 | 3 | $85,000 | $170,000 | $255,000 |
| Futsal (lit) | court | $45,000 | 0 | 1 | 1 | $0 | $45,000 | $45,000 |
| Pickleball (lit) | court | $30,000 | 0 | 2 | 2 | $0 | $60,000 | $60,000 |
| Sand Volleyball (lit) | court | $10,000 | 0 | 1 | 1 | $0 | $10,000 | $10,000 |
| Sand Volleyball (unlit) | court | $7,500 | 1 | 0 | 1 | $7,500 | $0 | $7,500 |
| Tennis (lit) | court | $60,000 | 0 | 2 | 2 | $0 | $120,000 | $120,000 |
| ***Fields*** | | | | | | | | |
| Baseball(lit) | field | $315,000 | 0 | 2 | 2 | $0 | $630,000 | $630,000 |
| Multi-Purpose | field | $110,000 | 1 | 1 | 2 | $110,000 | $110,000 | $220,000 |
| | | | | | | | | |
| Fishing Pier | pier | $20,000 | 1 | 1 | 2 | $20,000 | $20,000 | $40,000 |
| Miniature Golf Course | course | $70,000 | 1 | 0 | 1 | $70,000 | $0 | $70,000 |
| Parking Spaces | space | $2,000 | 84 | 349 | 433 | $168,000 | $698,000 | $866,000 |
| Pavilion | pavilion | $48,000 | 1 | 2 | 3 | $48,000 | $96,000 | $144,000 |
| Playground | playground | $75,000 | 3 | 2 | 5 | $225,000 | $150,000 | $375,000 |
| Restrooms | sq. ft. | $155 | 126 | 1,280 | 1,406 | $19,530 | $198,400 | $217,930 |
| Trail: Paved | mile of trail | $250,000 | 0.45 | 0.00 | 0.45 | $112,500 | $0 | $112,500 |
| Wooden Gazebo | gazebo | $12,000 | 0 | 1 | 1 | $0 | $12,000 | $12,000 |
| **Recreational Facility Value** | | | | | | | | **$4,155,930** |
| **Architecture, Engineering, and Inspection @ 9%[4]** | | | | | | | | **$374,034** |
| **Total Recreational Facility Value[5]** | | | | | | | | **$4,529,964** |
| **Total Number of Acres[6]** | | | | | | | | **37.65** |
| **Total Recreational Facility Value per Acre[7]** | | | | | | | | **$120,318** |
| **Total Permanent Population[8]** | | | | | | | | **23,720** |
| **Total Facilities and Equipment Value per Resident[9]** | | | | | | | | **$190.98** |

1) Estimates based on recent construction costs, insured values of the facilities, discussions with the Village of Palm Springs staff, and recent cost information obtained for similar facilities from other jurisdictions.
2) Source: Table II-1

3) Inventory count by park type (Item 2) multiplied by the estimated unit cost (Item 1)
4) Facility and equipment value multiplied by 9% based on information provided by Village of Palm Springs
5) Sum of the facilities and equipment value and the architecture, engineering, and inspection cost (Item 4)
6) Source: Table II-1
7) Total facilities and equipment value (Item 5) divided by total number of acres (Item 6)
8) Source: Appendix A, Table A-10
9) Total facilities and equipment value (Item 5) divided by the total weighted seasonal population (Item 8)

***Credit Component***

To avoid overcharging new development for the capital cost of providing parks and recreation services, a review of the capital funding program for the parks and recreation program was completed. The purpose of this review is to estimate any future revenues generated by new development, other than impact fees, which will be used to fund the expansion of capital facilities and land related to the Village of Palm Springs parks and recreation program. As mentioned previously, the credit component does not include any capital renovation, maintenance, or operations expenses, as these types of expenditures do not add capacity and should not be considered for impact fee credit.

Capital Expansion Credit

The capital expansion expenditure credit per resident was calculated based on non-impact fee revenue funding for capital expansion projects completed over the past five years as well as those programmed for the next five years. To calculate the capital expenditure per resident, the average annual capital expansion expenditures are divided by average population for the same period. As shown in Table III-6, the average annual expenditure over this five-year period amounts to approximately $403,000 and approximately $17 per resident per year.

Once the revenue credit per population is calculated, a credit adjustment was made for the portion of the revenue credit funded with ad valorem tax revenues. This adjustment accounts for the fact that new homes tend to pay higher property taxes per dwelling unit than older homes and was estimated based on a comparison of the average taxable value of newer homes to that of all homes.

# Table III -6

## Capital Expansion Credit

| Description[1] | FY 2016 | FY 2017 | FY 2018 | FY 2019 | FY 2020 | FY 2021 | FY 2022 | FY 2023 | FY 2024 | FY 2025 | Total (FY 2018-25) |
|---|---|---|---|---|---|---|---|---|---|---|---|
| ***General Fund*** | | | | | | | | | | | |
| Foxtail Palm Park Improvements | | | $27,537 | $19,364 | $172,307 | | | | | | $219,208 |
| Royal Palm Park Improvements | | | | | $9,100 | | | | | | $9,100 |
| Tennis Court Conversion to Futsal & Pickleball Courts | | | | | $21,476 | | | | | | $21,476 |
| Areca Palm Park Improvements | | | $22,568 | $7,563 | | | | | | | $30,131 |
| Frost Lake Irrigation | | $13,286 | $3,542 | | | | | | | | $16,828 |
| Royal Palm Park Irrigation & Electric | | | $4,065 | | | | | | | | $4,065 |
| Lakewood Gardens Park Irrigation & Electric | | | $8,470 | | | | | | | | $8,470 |
| Pony Tail Palm Park Improvements | | | | $3,987 | | | | | | | $3,987 |
| Sago Park Group Pavilion (one large group pavilion) | | | | | | | $37,500 | | | | $37,500 |
| Sago Park Group Pavilion (one small group pavilion) | | | | | | | $12,500 | | | | $12,500 |
| Sago Palm Park Improvements | | | | | | $6,667 | $32,500 | | | | $39,167 |
| Purchase of Artificial Christmas Tree | | | | | | | $20,000 | | | | $20,000 |
| ***Subtotal -- General Fund*** | ***$0*** | ***$13,286*** | ***$66,182*** | ***$30,914*** | ***$202,883*** | ***$6,667*** | ***$102,500*** | ***$0*** | ***$0*** | ***$0*** | ***$422,432*** |
| ***Sales Tax*** | | | | | | | | | | | |
| Sabal Palm Park Restroom & Improvements | | | | | $75,853 | | | | | | $75,853 |
| Park Connector Pathway Improvements | | | | $43,479 | $132,530 | | | | | | $176,009 |
| Royal Palm Park Irrigation & Electric & Improvements | | | $1,305 | | $78 | | | | | | $1,383 |
| Lakewood Gardens Park Irrigation & Electric | | | $694 | | | | | | | | $694 |
| Sabal Palm Park Eng Services for Restroom Facility | | | | $4,744 | | | | | | | $4,744 |
| Areca Palm Park Improvements | | | | $196,128 | | | | | | | $196,128 |
| Royal Palm Park Engineering Services | | | | $17,965 | | | | | | | $17,965 |
| Sago Park Group Pavilion (one large group pavilion) | | | | | | | $37,500 | | | | $37,500 |
| Sago Park Group Pavilion (one small group pavilion) | | | | | | | $12,500 | | | | $12,500 |
| Pathway Park - Expansion Engineering & Construction | | | | | | $637,187 | $494,034 | $800,000 | | | $1,931,221 |
| Sago Palm Park Improvements | | | | | | $6,667 | $32,500 | | | | $39,167 |
| ***Subtotal -- Sales Tax*** | ***$0*** | ***$0*** | ***$1,999*** | ***$262,316*** | ***$208,461*** | ***$643,854*** | ***$576,534*** | ***$800,000*** | ***$0*** | ***$0*** | ***$2,493,164*** |
| ***Grants & Other Sources*** | | | | | | | | | | | |
| Foxtail Palm Park Improvements | | | | | $610,906 | | | | | | $610,906 |
| Park Connector Pathway Improvements | | | | $113,263 | $151,542 | | | | | | $264,805 |
| Pathway Park - Expansion Engineering & Construction | | | | | | $200,000 | | | | | $200,000 |
| Sago Palm Park Improvements | | | | | | $6,667 | $32,500 | | | | $39,167 |
| ***Subtotal -- Grants & Other Sources*** | ***$0*** | ***$0*** | ***$0*** | ***$113,263*** | ***$762,448*** | ***$206,667*** | ***$32,500*** | ***$0*** | ***$0*** | ***$0*** | ***$1,114,878*** |
| **Total Capital Expansion Expenditures** | **$0** | **$13,286** | **$68,181** | **$406,493** | **$1,173,792** | **$857,188** | **$711,534** | **$800,000** | **$0** | **$0** | **$4,030,474** |
| Annual Capital Expansion Expenditures[2] | | | | | | | | | | | $403,047 |
| Average Population (FY 2016-2025)[3] | | | | | | | | | | | 23,777 |
| **Annual Capital Expansion Expenditure per Person[4]** | | | | | | | | | | | **$16.95** |
| Portion of Capital Expansion Projects Funded with Ad Valorem Tax Revenues[5] | | | | | | | | | | | 2% |
| Portion Funded with Ad-Valorem Tax Revenues[6] | | | | | | | | | | | $0.34 |
| Credit Adjustment Factor for Residential Land Uses[7] | | | | | | | | | | | 1.70 |
| Adjusted Annual Capital Improvement Credit per Person[8] | | | | | | | | | | | $0.58 |
| Portion Funded with Sources Other than Ad Valorem Tax Revenues[9] | | | | | | | | | | | $16.61 |
| **Residential Land Uses: Total Capital Expansion Credit per Resident[10]** | | | | | | | | | | | **$17.19** |

1) Source: Village of Palm Springs
2) Average capital expenditures over the 10-year period
3) Source: Appendix A, Table A-10
4) Annual capital expansion expenditures (Item 2) divided by the average population (Item 3)
5) Portion of total capital expansion expenditures funded by ad valorem tax revenue
6) Annual capital expansion expenditure per person (Item 4) multiplied by the portion of capital expansion projects funded with ad valorem tax revenues (Item 5)
7) Adjustment factor to reflect higher ad valorem taxes paid by new homes
8) Portion funded with ad valorem tax revenues (Item 6) multiplied by the credit adjustment factor (Item 7)
9) Annual capital expansion expenditures per person (Item 4) less portion funded with ad-valorem tax revenues (Item 6)
10) Adjusted capital expansion expenditures per person (Item 8) plus the portion funded with other revenue sources (Item 9)

Debt Service Credit

Any outstanding bond issues related to parks and recreation also will result in a credit to the impact fee. The capital expansion portion of the remaining payments of debt service are divided by the population during the same period to determine the debt service credit per resident. Table III-7 presents these calculations for parks and recreation facilities.

**Table III-7**

**Debt Service Credit**

| Description[1] | Funding Source[1] | Present Value of Payments Remaining[1] | Avg Annual Population During Remaining Bond Issue Period[2] | Credit per Resident[3] |
|---|---|---|---|---|
| General Obligation Bond, Park Improvements | General Fund | $168,184 | 25,047 | $6.71 |
| **Total Debt Service Credit per Resident** | | | | **$6.71** |
| | | | | |
| Portion Funded with Ad Valorem Revenues[4] | | | | $1.54 |
| Credit Adjustment Factor[5] | | | | 1.70 |
| Adjusted Debt Service Credit per Resident for Portion Funded with Ad Valorem Revenues[6] | | | | $2.62 |
| Portion Funded with Sources Other than Ad Valorem Tax Revenues[7] | | | | $5.17 |
| **Total Adjusted Debt Service Credit per Resident[8]** | | | | **$7.79** |

1) Source: Village of Palm Springs
2) Source: Appendix A, Table A-10
3) Present value of payments remaining (Item 1) divided by average annual population (Item 2)
4) Portion of debt service funded with ad valorem revenues
5) Adjustment factor to reflect higher ad valorem taxes paid by new homes
6) Portion funded with ad valorem revenues multiplied by the credit adjustment factor (Item 5)
7) Total debt service credit per resident less portion funded with ad valorem revenue (Item 4)
8) Adjusted debt service credit per resident (Item 6) plus the portion funded with other revenue sources (Item 7)

### *Net Parks & Recreation Facilities Impact Cost*

The net impact cost per resident is the difference between the cost and credit components. Table III-8 summarizes the calculation of the net impact cost for the parks and recreational facilities impact fee. As presented, the net impact cost amounts to approximately $226 per resident.

**Table III-8**

**Net Impact Cost per Resident**

| Impact Cost / Credit Element | Per Permanent Resident |
|---|---|
| ***Impact Cost*** | |
| Total Land Value per Resident[1] | $366.60 |
| Facilities and Equipment Value per Resident[2] | $190.98 |
| **Total Impact Cost per Resident** | **$557.58** |
| ***Revenue Credit*** | |
| Capital Expansion Credit[3]: | |
| - Annual Expenditures | $17.19 |
| Capitalization Rate | 2.3% |
| Capitalization Period (in years) | 25 |
| Total Capital Expansion Credit[4] | $324.08 |
| Total Debt Service Credit[5] | $7.79 |
| Total Revenue Credit[6] | $331.87 |
| ***Net Impact Cost*** | |
| Net Impact Cost[7] | **$225.71** |

1) Source: Table III-4
2) Source: Table III-5
3) Source: Table III-6
4) Source: The present value of the capital expansion credit per resident (Item 3) at a discount rate of 2.3% with a capitalization period of 25 years
5) Source: Table III-7
6) Sum of the total capital expansion credit per resident (Item 4) and debt service credit per resident (Item 5)
7) Total impact cost per resident less total revenue credit per resident (Item 6)

***Calculated Parks & Recreation Facilities Impact Fee Schedule***

Table III-9 presents the calculated parks and recreation facilities impact fee schedule for the Village of Palm Springs for residential land uses, based on the net impact cost per resident previously presented in Table III-8. Also presented in the table is a comparison to the Village's current adopted fee and percent change from the current fee. The Village's current impact fee charges all residential categories the same fee. The proposed methodology differentiates by residential category and tiers single family homes.

**Table III-9**

**Calculated Parks and Recreation Facilities Impact Fee Schedule**

| Land Use | Impact Unit | Residents per Unit[1] | Net Cost per Resident[2] | Total Impact Fee[3] | Current Adopted Fee[4] | Percent Change[5] |
|---|---|---|---|---|---|---|
| ***Residential*** | | | | | | |
| Single Family (detached/attached): | | | | | | |
| - Less than 1,500 sf | du | 2.92 | $225.71 | **$659** | $273 | 141% |
| - 1,500 to 2,499 sf | du | 3.24 | $225.71 | **$731** | $273 | 168% |
| - 2,500 sf or more | du | 3.63 | $225.71 | **$819** | $273 | 200% |
| Multi-Family (Apartment/Condo) | du | 2.15 | $225.71 | **$485** | $273 | 78% |
| Mobile Home | du | 2.58 | $225.71 | **$582** | $273 | 113% |
| Senior Adult Housing (Detached) | du | 2.48 | $225.71 | **$560** | $273 | 105% |
| Senior Adult Housing (Attached) | du | 1.64 | $225.71 | **$370** | $273 | 36% |

1) Source: Appendix A, Table A-2
2) Source: Table III-8
3) Residents per unit (Item 1) for each land use category multiplied by the net cost per resident (Item 2)
4) Source: Village of Palm Springs
5) Percent change from the current adopted fee (Item 4) to the total impact fee (Item 3)

### *Parks & Recreation Facilities Impact Fee Schedule Comparison*

As part of the work effort in updating Village of Palm Springs parks and recreation impact fee schedule, the Village's calculated and adopted impact fee schedules were compared to the adopted fee schedules of other jurisdictions in Palm Beach County. Table III-10 presents this comparison.

## Table III-10

## Calculated Parks & Recreation Facilities Impact Fee Schedule

| Land Use | Unit[2] | Village of Palm Springs | | Boca Raton [5] | Boynton Beach [6] | Jupiter [7] | Mangonia Park [8] | Palm Beach Gardens [9] | Palm Beach Shores [10] | Royal Palm Beach [11] | Tequesta [12] | Wellington [13] |
|---|---|---|---|---|---|---|---|---|---|---|---|---|
| | | Calculated[3] | Adopted[4] | | | | | | | | | |
| Date of Last Update | | 2021 | N/A | N/A | N/A | 2006 | 2009 | 2015 | 2005 | 2016 | N/A | 2003 |
| Assessed Portion of Calculated[1] | | N/A | N/A | N/A | N/A | 100% | N/A | 100% | N/A | 66% | N/A | 100% |
| ***Residential:*** | | | | | | | | | | | | |
| Single Family (1,600 sq ft) | du | $731 | $273 | $4,000 | $875 | $967 | $1,253 | $3,703 | $416 | $1,994 | $276 | $3,925 |
| Multi-Family (1,300 sq ft) | du | $485 | $273 | $3,500 | $595 | $845 | $863 | $3,041 | $338 | $1,636 | $196 | $3,925 |

1) Represents the portion of the maximum calculated fee for each respective county that is actually charged. Fee may have been lowered/increased through annual indexing or policy discounts. Does not account for moratorium/suspensions.
2) du = dwelling unit
3) Table III-9
4) Source: Village of Palm Springs
5) Source: Boca Raton Municipal Facilities And Services User Fee Schedule
6) Source: City of Boynton Beach; Code Library
7) Source: City of Jupiter, Code Library
8) Source: Mangonia Park, Florida - Code of Ordinances, Chapter 11.5 - Impact Fee, Article II. - Impact Fees
9) Source: City of Palm Beach Gardens Division of Unified Services
10) Source: Palm Beach Shores, Florida - Code of Ordinances, Chapter 28 - Finance, Article III. - Impact Fees
11) Source: Village of Royal Palm Beach; Municode
12) Source: Tequesta, Florida - Code of Ordinances, Chapter 38 - Impact Fees
13) Source: Wellington, Florida - Code of Ordinances Chapter 33 - Impact Fees, Division 3. - Parks and Recreational Facilities Impact Fee

# Appendix A
# Demand Component
# Population: Supplemental Information

# Appendix A: Population

Both impact fee programs included in this report require the use of population data in calculating current levels of service, performance standards, and demand and credit calculations. With this in mind, a consistent approach to developing population estimates and projections is an important component of the data compilation process.

In the case of parks and recreational facilities impact fee, permanent resident population was used to be consistent with the population measure used in establishing the Village's adopted LOS standards.

In the case of law enforcement, to accurately determine demand for services, not only the residents, or permanent population of the Village, but also the seasonal residents and visitors were considered. Seasonal residents include visitors and part-time residents, which are defined as living in Palm Springs for less than six months each year.

Table A-1 presents the Village of Palm Springs' population trends. The projections indicate that the current weighted seasonal population of the Village is approximately 24,400 and is estimated to increase to 29,300 (increase of 4,900) by 2045. Based on these estimates, the projected population growth rate averages 0.7% percent per year between 2020 and 2045.

## Table A-1

## Weighted Seasonal Population Trends and Projections

| Year | Village of Palm Springs Weighted Population[1] |
|---|---|
| 2000 | 12,271 |
| 2001 | 13,164 |
| 2002 | 13,448 |
| 2003 | 13,622 |
| 2004 | 14,605 |
| 2005 | 14,619 |
| 2006 | 15,265 |
| 2007 | 11,932 |
| 2008 | 16,426 |
| 2009 | 16,549 |
| 2010 | 19,497 |
| 2011 | 19,658 |
| 2012 | 20,366 |
| 2013 | 21,105 |
| 2014 | 21,517 |
| 2015 | 22,954 |
| 2016 | 23,136 |
| 2017 | 23,952 |
| 2018 | 24,155 |
| 2019 | 24,271 |
| 2020 | 24,587 |
| **2021** | **24,435** |
| 2022 | 24,699 |
| 2023 | 24,965 |
| 2024 | 25,236 |
| 2025 | 25,502 |
| 2026 | 25,727 |
| 2027 | 25,953 |
| 2028 | 26,180 |
| 2029 | 26,411 |
| 2030 | 26,644 |
| 2031 | 26,839 |
| 2032 | 27,034 |
| 2033 | 27,232 |
| 2034 | 27,431 |
| 2035 | 27,635 |
| 2036 | 27,806 |
| 2037 | 27,979 |
| 2038 | 28,152 |
| 2039 | 28,326 |
| 2040 | 28,507 |
| 2041 | 28,655 |
| 2042 | 28,805 |
| 2043 | 28,954 |
| 2044 | 29,105 |
| 2045 | 29,259 |

1) Source: Appendix A, Table A-10

### *Apportionment of Demand by Residential Unit Type and Size*

Table A-2 presents the population per housing unit (PPH) for the several residential categories based on weighted seasonal and permanent population. This analysis includes all housing units, both occupied and vacant.

**Table A-2**

**Persons per Housing Unit by Housing Type**

| Housing Type | Population[1] | Housing Units[2] | Ratio[3] | Weighted Population / Housing Units[4] | Permanent Population / Housing Units[5] |
|---|---|---|---|---|---|
| Single Family (detached) | 12,391 | 3,713 | | | |
| - Less than 1,500 sf | | | 90% | 3.01 | 2.92 |
| - 1,500 to 2,499 sf | | | 100% | 3.34 | 3.24 |
| - 2,500 sf or greater | | | 112% | 3.74 | 3.63 |
| Multi-Family | 12,620 | 5,708 | | 2.21 | 2.15 |
| Mobile Home | 447 | 168 | | 2.66 | 2.58 |
| | | | | | |
| Senior Housing (Detached)[6] | 9,475 | 3,713 | | 2.55 | 2.48 |
| Senior Housing (Attached)[7] | 9,651 | 5,708 | | 1.69 | 1.64 |
| Congregate Care Facility/Continuing Care Retirement Center[8] | 19,126 | 9,421 | | 2.03 | 1.97 |

1) Source: 2019 American Community Survey (ACS); 5-Yr. Estimates, Table B25033 (adjusted for seasonal population)
2) Source: 2019 ACS, 5-Year Estimates, Table DP04
3) Ratios developed based on national PPH data derived from the 2019 American Housing Survey
4) Population (Item 1) divided by housing units (Item 2). Single family residential tiers are adjusted by the ratios developed using the 2019 AHS data (Item 3).
5) Permanent population divided by housing units (Item 2)
6) Estimate for Senior Housing (Detached) is based on people per household figures for single-family homes, adjusted for the residents over 55 years of age based on information obtained from the 2017 National Household Travel Survey, prepared by the US Department of Transportation.
7) Estimate for Senior Housing (Attached) is based on people per household figures for multi-family homes, adjusted for the residents over 55 years of age based on information obtained from the 2017 National Household Travel Survey, prepared by the US Department of Transportation.
8) Estimate for congregate care facility is based on people per household figures for single and multi-family homes, adjusted for the residents over 55 years of age based on information obtained from the 2017 National Household Travel Survey, prepared by the US Department of Transportation.

Notes: Excludes boats, RVs, vans, etc.

### *Functional Population*

Functional population, as used in the impact fee analysis, is a generally accepted methodology for several impact fee areas, including law enforcement services, and is based on the assumption that demand for certain facilities is generally proportional to the presence of people at a land use, including residents, employees, and visitors. It is not enough to simply add resident population to the number of employees, since the service demand characteristics can vary considerably by type of industry.

Functional population is the equivalent number of people occupying space within a community on a 24-hour-day, 7-days-a-week basis. A person living and working in the community will have the functional population coefficient of 1.0. A person living in the community but working elsewhere may spend only 16 hours per day in the community on weekdays and 24 hours per day on weekends for a functional population coefficient of 0.76 (128-hour presence divided by 168 hours in one week). A person commuting into the Village to work five days per week would have a functional population coefficient of 0.30 (50-hour presence divided by 168 hours in one week). Similarly, a person traveling into the community to shop at stores, perhaps averaging 8 hours per week, would have a functional population coefficient of 0.05.

Functional population thus tries to capture the presence of all people within the community, whether residents, workers, or visitors, to arrive at a total estimate of effective population needed to be served.

This form of adjusting population to help measure real facility needs replaces the population approach of merely weighting residents two-thirds and workers one-third (Nelson and Nicholas 1992)[1]. By estimating the functional and weighted population per unit of land use across all major land uses in a community, an estimate of the demand for certain facilities and services in the present and future years can be calculated. The following paragraphs explain how functional population is calculated for residential and non-residential land uses.

Residential Functional Population

Developing the residential component of functional population is simpler than developing the non-residential component. It is generally estimated that people spend one-half to three-fourths of their time at home and the rest of each 24-hour day away from their place of residence. In developing the residential component of the Village of Palm Springs' functional population, an analysis of the Village's population and employment characteristics was conducted. Tables A-3 and A-4 present this analysis for the Village. Based on this analysis, people in the Village, on average, spend 15.1 hours each day at their place of residence. This corresponds to approximately 63 percent of each 24-hour day at their place of residence and the remaining 37 percent away from home.

[1] Arthur C. Nelson and James C. Nicholas, "Estimating Functional Population for Facility Planning," *Journal of Urban Planning and Development* 118(2): 45-58 (1992)

**Table A-3**
**Population & Employment Characteristics**

| Calculation Step | Figure |
|---|---|
| Total workers living in Village of Palm Springs[1] | 11,015 |
| Total Census Population (2010)[2] | 18,928 |
| Total workers as a percent of population[3] | **58.2%** |
| School age population (5-17 years) (2010)[4] | 3,172 |
| School age population as a percent of population[5] | **16.8%** |
| Population net of workers and school age population[6] | 4,741 |
| Other population as a percent of total population[7] | **25.0%** |

1) Source: Census Transportation Planning Package (CTPP), 2016
2) Source: 2010 U.S Census, Table P-1
3) Total workers (Item 1) divided by population (Item 2)
4) Source: 2010 U.S Census, Table QT-P1
5) Total school age population (Item 4) divided by 2010 population (Item 2)
6) Total population (Item 2) less total workers (Item 1) and school age population (Item 4)
7) Population net of workers and school age population (Item 6) divided by 2010 population (Item 2)

**Table A-4**
**Residential Coefficient for 24-Hour Functional Population**

| Population Group | Hours at Residence[1] | Percent of Population[2] | Effective Hours[3] |
|---|---|---|---|
| Workers | 13 | 58.2% | 7.6 |
| Students | 15 | 16.8% | 2.5 |
| Other | 20 | 25.0% | 5.0 |
| Total Hours at Residence[4] | | | 15.1 |
| **Residential Functional Population Coefficient[5]** | | | **62.9%** |

1) Estimated
2) Source: Table A-3
3) Hours at residence (Item 1) multiplied by the percent of population (Item 2)
4) Sum of effective hours (Item 3)
5) Sum of effective hours (Item 4) divided by 24

Non-Residential Functional Population

Given the varying characteristics of non-residential land uses, developing the estimates of functional residents for non-residential land uses is more complicated than developing estimated functional residents for residential land uses. Nelson and Nicholas originally introduced a method for estimating functional resident population, which is now widely used in the industry. This method uses trip generation data from the Institute of Transportation Engineers' (ITE) Trip

Generation Manual and Tindale Oliver's Trip Characteristics Database, information of passengers per vehicle, workers per vehicle, length of time spent at the land use, and other variables.

Specific calculations include:

- Total one-way trips per employee (ITE trips multiplied by 50 percent to avoid double counting entering and exiting trips as two trips).
- Visitors per impact unit based on occupants per vehicle (trips multiplied by occupants per vehicle less employees).
- Worker hours per week per impact unit (such as nine worker-hours per day multiplied by five days in a work week).
- Visitor hours per week per impact unit (visitors multiplied by number of hours per day times relevant days in a week, such as five for offices and seven for retail shopping).
- Functional population coefficients per employee developed by estimating time spent by employees and visitors at each land use.

# Table A-5

## General Functional Population Coefficients

| Population/ Employment Category | ITE LUC | Employee Hours In-Place[1] | Trips per Employee[2] | One-Way Trips per Employee[3] | Journey-to-Work Occupants per Trip[4] | Daily Occupants per Trip[5] | Visitors per Employee[6] | Visitor Hours per Trip[1] | Days per Week[7] | Functional Population Coefficient[8] |
|---|---|---|---|---|---|---|---|---|---|---|
| Population | | | | | | | | | 7.00 | **0.629** |
| Natural Resources | N/A | 9.00 | 3.05 | 1.53 | 1.32 | 1.38 | 0.09 | 1.00 | 7.00 | **0.379** |
| Construction | 110 | 9.00 | 3.05 | 1.53 | 1.32 | 1.38 | 0.09 | 1.00 | 5.00 | **0.271** |
| Manufacturing | 140 | 9.00 | 2.47 | 1.24 | 1.32 | 1.38 | 0.07 | 1.00 | 5.00 | **0.270** |
| Transportation, Communication, Utilities | 110 | 9.00 | 3.05 | 1.53 | 1.32 | 1.38 | 0.09 | 1.00 | 5.00 | **0.271** |
| Wholesale Trade | 150 | 9.00 | 5.05 | 2.53 | 1.32 | 1.38 | 0.15 | 1.00 | 5.00 | **0.272** |
| Retail Trade | 820 | 9.00 | 48.90 | 24.45 | 1.24 | 1.73 | 11.98 | 1.50 | 7.00 | **1.124** |
| Finance, Insurance, Real Estate | 710 | 9.00 | 3.28 | 1.64 | 1.24 | 1.73 | 0.80 | 1.00 | 5.00 | **0.292** |
| Services[9] | N/A | 9.00 | 28.38 | 14.19 | 1.24 | 1.73 | 6.95 | 1.00 | 6.00 | **0.570** |
| Government[10] | 730 | 9.00 | 7.45 | 3.73 | 1.24 | 1.73 | 1.83 | 1.00 | 7.00 | **0.451** |

(1) Assumed

(2) Trips per employee represents all trips divided by the number of employees and is based on Trip Generation 10th Edition (Institute of Transportation Engineers 2017) as follows:

ITE Code 110 at 3.05 weekday trips per employee, Volume 2 - Industrial Land Uses, page 11

ITE Code 140 at 2.47 weekday trips per employee, Volume 2 - Industrial Land Uses, page 58

ITE Code 150 at 5.05 weekday trips per employee, Volume 2 - Industrial Land Uses, page 77

ITE Code 710 at 3.28 weekday trips per employee, Volume 2 Office Land Uses, page 12

ITE Code 730 at 7.45 weekday trips per employee, Volume 2 Office Land Uses, page 180

ITE Code 820 based on blended average of trips by retail center size calculated below, adapted from Volume 2 - Retail Land Uses, page 138.

Trips per retail employee from the following table:

| *Retail Scale* | *Assumed Center Size* | *Trip Rate* | *Sq Ft per Employee[11]* | *Trips per Employee* | *Share* | *Weighted Trips* |
|---|---|---|---|---|---|---|
| Neighborhood <50k sq.ft. | 50 | 75.05 | 802 | 60 | 45.0% | 27.00 |
| Community 50k-250k sq.ft. | 250 | 44.84 | 975 | 44 | 35.0% | 15.40 |
| Regional 250k-500k sq.ft. | 500 | 35.92 | 1,043 | 37 | 15.0% | 5.55 |
| Super Reg. 500k-1000k sq.ft. | 1,000 | 28.78 | 676 | 19 | 5.0% | 0.95 |
| Sum of Weighted Trips/1k sq.ft. | | | | | | 48.90 |

(3) Trip per employee (Item 2) multiplied by 0.5.

(4) Journey-to-Work Occupants per Trip from 2001 Nationwide Household Travel Survey (FHWA 2001) as follows:

1.32 occupants per Construction, Manufacturing, TCU, and Wholesale trip

1.24 occupants per Retail Trade, FIRE, and Services trip

(5) Daily Occupants per Trip from 2001 Nationwide Household Travel Survey (FHWA 2001) as follows:

1.38 occupants per Construction, Manufacturing, TCU, and Wholesale trip

1.73 occupants per Retail Trade, FIRE, and Services trip

(6) [Daily occupants per trip (Item 5) multiplied by one-way trips per employee (Item 3)] - [(Journey-to-Work occupants per trip (Item 4) multiplied by one-way trips per employee (Item 3)]

(7) Typical number of days per week that indicated industries provide services and relevant government services are available.

(8) Table A-7 for residential and the equation below to determine the Functional Population Coefficient per Employee for all land-use categories except residential includes the following:

$$\frac{(\text{Days per Week} \times \text{Employee Hours in Place}) + (\text{Visitors per Employee} \times \text{Visitor Hours per Trip} \times \text{Days per Week})}{(24 \text{ Hours per Day} \times 7 \text{ Days per Week})}$$

(9) Trips per employee for the services category is the average trips per employee for the following service related land use categories: quality restaurant, high-turnover restaurant, supermarket, hotel, motel, elementary school, middle school, high school, hospital, medical office, and church. Source for the trips per employee figure from ITE, 10th ed., when available, or else derived from the square feet per employee for the appropriate land use category from the Energy Information Administration from Table B-1 of the Commercial Energy Building Survey, 2003.

(10) Includes Federal Civilian Government, Federal Military Government, and State and Local Government categories.

(11) Square feet per retail employee from the Energy Information Administration from Table B-1 of the Commercial Energy Building Survey, 2003

**Table A-6**

**Village Functional Population (2021)**

| Population Category | Village of Palm Springs Baseline Data[1] | Functional Resident Coefficient[2] | Functional Population[3] |
|---|---|---|---|
| 2021 Weighted Population | 24,435 | 0.629 | 15,370 |
| | | | |
| ***Employment Category*** | | | |
| Natural Resources | 0 | 0.379 | 0 |
| Construction | 361 | 0.271 | 98 |
| Manufacturing | 94 | 0.270 | 25 |
| Transportation, Communication, and Utilities | 242 | 0.271 | 66 |
| Wholesale Trade | 239 | 0.272 | 65 |
| Retail Trade | 738 | 1.124 | 830 |
| Finance, Insurance, and Real Estate | 1,372 | 0.292 | 401 |
| Services | 9,189 | 0.570 | 5,238 |
| Government Services | 891 | 0.451 | 402 |
| Total Employment by Category Population[4] | | | 7,125 |
| | | | |
| **2021 Total Functional Population[5]** | | | **22,495** |

1) Source: Table A-1 for population and Woods & Poole employment data published in 2020
2) Source: Table A-5
3) Functional population is calculated by multiplying the baseline data (Item 1) multiplied by the functional resident coefficient (Item 2)
4) The total employment population by category is the sum of the employment figures from the nine employment categories (e.g., natural resources, construction, etc.)
5) The total functional population is the sum of the residential functional population and the employment functional population

Table A-7 presents the Village's annual functional population figures from 2000 through 2045, based on the 2021 functional population figure from Table A-6 and the annual population growth rates from the population figures previously presented in Table A-1.

## Table A-7

## Village of Palm Springs Functional Population (2000 - 2045)

| Year | Village of Palm Springs Functional Population |
|---|---|
| 2000 | 11,295 |
| 2001 | 12,119 |
| 2002 | 12,386 |
| 2003 | 12,547 |
| 2004 | 13,450 |
| 2005 | 13,463 |
| 2006 | 14,055 |
| 2007 | 10,991 |
| 2008 | 15,134 |
| 2009 | 15,240 |
| 2010 | 17,953 |
| 2011 | 18,097 |
| 2012 | 18,749 |
| 2013 | 19,424 |
| 2014 | 19,812 |
| 2015 | 21,139 |
| 2016 | 21,308 |
| 2017 | 22,054 |
| 2018 | 22,230 |
| 2019 | 22,341 |
| 2020 | 22,631 |
| **2021** | **22,495** |
| 2022 | 22,742 |
| 2023 | 22,992 |
| 2024 | 23,245 |
| 2025 | 23,501 |
| 2026 | 23,713 |
| 2027 | 23,926 |
| 2028 | 24,141 |
| 2029 | 24,358 |
| 2030 | 24,577 |
| 2031 | 24,749 |
| 2032 | 24,922 |
| 2033 | 25,096 |
| 2034 | 25,272 |
| 2035 | 25,449 |
| 2036 | 25,602 |
| 2037 | 25,756 |
| 2038 | 25,911 |
| 2039 | 26,066 |
| 2040 | 26,222 |
| 2041 | 26,353 |
| 2042 | 26,485 |
| 2043 | 26,617 |
| 2044 | 26,750 |
| 2045 | 26,884 |

Source: Table A-6 for 2021. Remaining years are based on growth rates of the weighted seasonal population; Table A-1

Functional Residents by Specific Land Use Category

When a wide range of land uses impact services, an estimate of that impact is needed for each land use. This section presents functional population coefficient estimates by residential and non-residential land uses.

*Residential and Transient Land Uses*

As mentioned previously, different functional population coefficients need to be developed for each impact fee service area to be analyzed. For residential and transient land uses, these coefficients are displayed in Table A-8. The average number of persons per housing unit was calculated for single family homes by size of home, multi-family, and mobile home land uses separately. Besides the residential land uses, Table A-8 also includes transient land uses, such as hotels, motels, congregate care facilities (CCF), assisted living facilities and nursing homes. Secondary sources, such as Palm Beach County Tourist Development Council and the Florida Department of Elderly Affairs, are used to determine the occupancy rate for hotels, motels, CCF, assisted living and nursing homes.

*Non-Residential Land Uses*

A similar approach is used to estimate functional residents for non-residential land uses. Table A-9 presents basic assumptions and calculations, such as trips per unit, trips per employee, employees per impact unit, one-way trips per impact unit, worker hours, occupants per vehicle trip, visitors (patrons, etc.) per impact unit, visitor hours per trip, and days per week for non-residential land uses. The final column in the table shows the estimated functional resident coefficients by land use. These coefficients by land use measure the demand component for several impact fee programs and will be used in the calculation of the impact fee per unit for each land use category in the related impact fee schedules.

## Table A-8

## Functional Population for Residential and Transient Land Uses

| Residential Land Use | Impact Unit | ITE LUC[1] | Residents/ Visitors Per Unit[2] | Occupancy Rate[3] | Adjusted Residents Per Unit[4] | Visitor Hours at Place[5] | Workers Per Unit[6] | Work Day Hours[7] | Days Per Week[8] | Work Week Residents Per Unit[9] |
|---|---|---|---|---|---|---|---|---|---|---|
| ***Residential:*** | | | | | | | | | | |
| Single Family (detached): | | | | | | | | | | |
| - Less than 1,500 sf | du | 210 | 3.01 | - | - | - | - | - | - | 1.89 |
| - 1,500 to 2,499 sf | du | 210 | 3.34 | - | - | - | - | - | - | 2.10 |
| - 2,500 sf and greater | du | 210 | 3.74 | - | - | - | - | - | - | 2.35 |
| Multi-Family (Apartment/Condominium/Townhouse) | du | 220/221/222 | 2.21 | - | - | - | - | - | - | 1.39 |
| Mobile Home | du | 240 | 2.66 | | | | | | | 1.67 |
| Senior Adult Housing (Detached) | du | 251 | 2.55 | - | - | - | - | - | - | 1.60 |
| Senior Adult Housing (Attached) | du | 252 | 1.69 | - | - | - | - | - | - | 1.06 |
| ***Transient, Assisted, Group:*** | | | | | | | | | | |
| Congregate Care Facility/Continuing Care Retirement Center | du | 253/255 | 2.03 | 84% | 1.71 | 16 | 0.51 | 9 | 7 | 1.33 |
| Assisted Living | bed | 254 | 1.00 | 84% | 0.84 | 20 | 0.61 | 9 | 7 | 0.93 |
| Hotel | room | 310 | 2.10 | 73% | 1.53 | 12 | 0.58 | 9 | 7 | 0.98 |
| Motel | room | 320 | 2.10 | 73% | 1.53 | 12 | 0.13 | 9 | 7 | 0.81 |
| Nursing Home | bed | 620 | 1.00 | 84% | 0.84 | 20 | 1.05 | 9 | 7 | 1.09 |

(1) Land use code from the Institute of Transportation Engineers (ITE) Trip Generation Handbook, 10th Edition

(2) Estimates for the residential and congregate care facility/continuing care retirement center land use from Table A-2; estimates for the hotel and motel land use is based on data obtained from Palm Beach County Tourist Development Council; and the estimate used for assisted living/ nursing home land use is based on 1 person per bed.

(3) Source for hotel/motel occupancy: Palm Beach County Tourist Development Council. Average hotel/motel occupancy rate for 2014 through 2016. Source for nursing home occupancy rate is the Florida Department of Elderly Affairs, Palm Beach County Profile. Average occupancy rate for 2016 through 2018.

(4) Residents per unit times occupancy rate (Item 3)

(5), (7), (8) Estimated

(6) Adapted from ITE Trip Generation Handbook, 10th Edition

(9) For residential this is Residents Per Unit times 0.628. For Transient, Assisted, and Group it is:

$$\frac{[(\text{Adjusted Residents per Unit} \times \text{Hours at Place} \times \text{Days per Week}) + (\text{Workers Per Unit} \times \text{Work Hours Per Day} \times \text{Days per Week})]}{(24 \text{ Hours per Day} \times 7 \text{ Days per Week})}$$

## Table A-9

## Functional Population Coefficients for Non-Residential Land Uses

| ITE LUC[1] | Land Use | Impact Unit | Trips Per Unit[2] | Trip Rate Source | Trips Per Employee[3] | Employees Per Unit[4] | One-Way Factor @ 50%[5] | Worker Hours[6] | Occupants Per Trip[7] | Visitors[8] | Visitor Hours Per Trip[9] | Days Per Week[10] | Functional Resident Coefficient[11] |
|---|---|---|---|---|---|---|---|---|---|---|---|---|---|
| | ***RECREATIONAL:*** | | | | | | | | | | | | |
| 430 | Golf Course | hole | 30.38 | ITE 10th Edition | 20.52 | 1.48 | 15.19 | 9 | 1.87 | 26.93 | 0.25 | 7 | 0.84 |
| 444 | Movie Theater | screen | 114.83 | Blend ITE 10th& FL Studies | 53.12 | 2.16 | 57.42 | 9 | 1.87 | 105.22 | 1.00 | 7 | 5.19 |
| | ***INSTITUTIONAL:*** | | | | | | | | | | | | |
| 520 | Elementary School (Private) | student | 1.89 | ITE 10th Edition | 21.00 | 0.09 | 0.95 | 9 | 1.11 | 0.96 | 2.00 | 5 | 0.08 |
| 522 | Middle School (Private) | student | 2.13 | ITE 10th Edition | 25.15 | 0.08 | 1.07 | 9 | 1.11 | 1.11 | 2.00 | 5 | 0.09 |
| 530 | High School (Private) | student | 2.03 | ITE 10th Edition | 22.25 | 0.09 | 1.02 | 9 | 1.11 | 1.04 | 2.00 | 5 | 0.09 |
| 540 | University/Junior College (7,500 or fewer students) (Private) | student | 2.00 | ITE Regression Analysis | 11.75 | 0.17 | 1.00 | 9 | 1.11 | 0.94 | 2.00 | 5 | 0.10 |
| 550 | University/Junior College (more than 7,500 students) (Private) | student | 1.50 | ITE Regression Analysis | 11.75 | 0.13 | 0.75 | 9 | 1.11 | 0.70 | 2.00 | 5 | 0.08 |
| 560 | Church | 1,000 sf | 6.95 | ITE 10th Edition | 20.64 | 0.34 | 3.48 | 9 | 1.79 | 5.89 | 1.00 | 7 | 0.37 |
| 565 | Day Care Center | 1,000 sf | 49.63 | Blend ITE 10th& FL Studies | 21.38 | 2.32 | 24.82 | 9 | 1.79 | 42.11 | 0.15 | 5 | 0.81 |
| | ***MEDICAL:*** | | | | | | | | | | | | |
| 610 | Hospital | 1,000 sf | 10.72 | ITE 10th Edition | 3.79 | 2.83 | 5.36 | 9 | 1.54 | 5.42 | 1.00 | 7 | 1.29 |
| 630 | Clinic | 1,000 sf | 37.46 | Blend ITE 10th& FL Studies | 9.25 | 4.05 | 18.73 | 9 | 1.54 | 24.79 | 1.00 | 5 | 1.82 |
| | ***OFFICE:*** | | | | | | | | | | | | |
| 710 | General Office | 1,000 sf | 9.74 | ITE 10th Edition | 3.28 | 2.97 | 4.87 | 9 | 1.27 | 3.21 | 1.00 | 5 | 0.89 |
| 720 | Medical Office 10,000 sq ft or less | 1,000 sf | 23.83 | FL Studies | 8.70 | 2.74 | 11.92 | 9 | 1.54 | 15.62 | 1.00 | 5 | 1.20 |
| 720 | Medical Office greater than 10,000 sq ft | 1,000 sf | 34.12 | Blend ITE 10th& FL Studies | 8.70 | 3.92 | 17.06 | 9 | 1.54 | 22.35 | 1.00 | 5 | 1.72 |
| | ***RETAIL:*** | | | | | | | | | | | | |
| 820 | Shopping Center/Retail | 1,000 sfgla | 37.75 | ITE 10th Edition | 16.11 | 2.34 | 18.88 | 9 | 1.72 | 30.13 | 0.50 | 7 | 1.51 |
| 840/841 | New/Used Auto Sales | 1,000 sf | 24.58 | Blend ITE 10th& FL Studies | 11.84 | 2.08 | 12.29 | 9 | 1.72 | 19.06 | 1.00 | 7 | 1.57 |
| 850 | Supermarket | 1,000 sf | 106.64 | Blend ITE 10th& FL Studies | 75.01 | 1.42 | 53.32 | 9 | 1.72 | 90.29 | 0.50 | 7 | 2.41 |
| 880/881 | Pharmacy/Drug Store with & without Drive-Thru | 1,000 sf | 104.37 | Blend ITE 10th& FL Studies | 69.17 | 1.51 | 52.19 | 9 | 1.72 | 88.26 | 0.35 | 7 | 1.85 |
| 890 | Furniture Store | 1,000 sf | 6.30 | ITE 10th Edition | 10.93 | 0.58 | 3.15 | 9 | 1.72 | 4.84 | 0.50 | 7 | 0.32 |
| | ***SERVICES:*** | | | | | | | | | | | | |
| 911 | Bank/Savings Walk-In | 1,000 sf | 59.39 | ITE 10th Edition(adjusted) | 47.11 | 1.26 | 29.70 | 9 | 1.72 | 49.82 | 0.35 | 6 | 1.03 |
| 912 | Bank/Savings Drive-In | 1,000 sf | 102.66 | Blend ITE 10th& FL Studies | 31.79 | 3.23 | 51.33 | 9 | 1.72 | 85.06 | 0.15 | 6 | 1.49 |
| 931 | Quality Restaurant | 1,000 sf | 86.03 | Blend ITE 10th& FL Studies | 17.90 | 4.81 | 43.02 | 9 | 2.32 | 95.00 | 1.00 | 7 | 5.76 |
| 932 | High-Turn Over Restaurant | 1,000 sf | 106.26 | Blend ITE 10th& FL Studies | 21.26 | 5.00 | 53.13 | 9 | 2.32 | 118.26 | 0.75 | 7 | 5.57 |
| 934 | Fast Food Restaurant w/Drive-Thru | 1,000 sf | 482.53 | Blend ITE 10th& FL Studies | 45.49 | 10.61 | 241.27 | 9 | 2.32 | 549.14 | 0.25 | 7 | 9.70 |
| 942 | Automobile Care Center | 1,000 sf | 28.19 | Blend ITE 10th& FL Studies | 14.30 | 1.97 | 14.10 | 9 | 1.72 | 22.28 | 1.00 | 7 | 1.67 |
| 944 | Gas Station w/Convenience Market <2,000 sq ft | fuel pos. | 172.01 | ITE 10th Edition | 275.78 | 0.62 | 86.01 | 9 | 1.72 | 147.32 | 0.20 | 7 | 1.46 |
| 945 | Gas Station w/Convenience Market 2,000-2,999 sq ft | fuel pos. | 205.36 | ITE 10th Edition | 243.86 | 0.84 | 102.68 | 9 | 1.72 | 175.77 | 0.20 | 7 | 1.78 |
| 960 | Gas Station w/Convenience Market 3,000+ sq ft | fuel pos. | 230.52 | ITE 10th Edition | 230.91 | 1.00 | 115.26 | 9 | 1.72 | 197.25 | 0.20 | 7 | 2.02 |
| | ***INDUSTRIAL:*** | | | | | | | | | | | | |
| 110 | General Light Industrial | 1,000 sf | 4.96 | ITE 10th Edition | 3.05 | 1.63 | 2.48 | 9 | 1.46 | 1.99 | 1.00 | 5 | 0.50 |
| 140 | Manufacturing | 1,000 sf | 3.93 | ITE 10th Edition | 2.47 | 1.59 | 1.97 | 9 | 1.46 | 1.29 | 1.00 | 5 | 0.46 |
| 150 | Warehousing | 1,000 sf | 1.74 | ITE 10th Edition | 5.05 | 0.34 | 0.87 | 9 | 1.46 | 0.93 | 0.75 | 5 | 0.11 |
| 151 | Mini-Warehouse | 1,000 sf | 1.49 | Blend ITE 10th & FL Studies | 61.90 | 0.02 | 0.75 | 9 | 1.46 | 1.08 | 0.75 | 7 | 0.04 |
| 154 | High-Cube Transload/Storage | 1,000 sf | 1.40 | ITE 10th Edition | 5.05 | 0.28 | 0.70 | 9 | 1.46 | 0.74 | 0.75 | 5 | 0.09 |

Sources:
(1) Land use code found in the Institute of Transportation Engineers (ITE) Trip Generation Handbook, 10th Edition
(2) Land uses and trip generation rates consistent with those utilized in the Transportation Impact Fee calculation
(3) Trips per employee from ITE Trip Generation Handbook, 10th Edition, when available
(4) Trips per impact unit divided by trips per person (usually employee). When trips per person are not available, the employees per unit is estimated.
(5) Trips per unit (Item 2) multiplied by 50 percent
(6), (9), (10) Estimated
(7) Nationwide Personal Transportation Survey
(8) [(One-way Trips/Unit X Occupants/Trip) - Employees].
(11) [(Workers X Hours/Day X Days/Week) + (Visitors X Hours/Visit X Days/Week)]/(24 Hours x 7 Days)

## Table A-10
## Weighted Seasonal Population Projections

| Year | Permanent Population[1] | Seasonal Population[2] | Total Weighted Season Population[3] |
|---|---|---|---|
| 2000 | 11,699 | 572 | 12,271 |
| 2001 | 12,549 | 615 | 13,164 |
| 2002 | 12,819 | 629 | 13,448 |
| 2003 | 12,985 | 637 | 13,622 |
| 2004 | 13,922 | 683 | 14,605 |
| 2005 | 13,936 | 683 | 14,619 |
| 2006 | 14,551 | 714 | 15,265 |
| 2007 | 11,374 | 558 | 11,932 |
| 2008 | 15,657 | 769 | 16,426 |
| 2009 | 15,775 | 774 | 16,549 |
| 2010 | 18,928 | 569 | 19,497 |
| 2011 | 19,082 | 576 | 19,658 |
| 2012 | 19,769 | 597 | 20,366 |
| 2013 | 20,487 | 618 | 21,105 |
| 2014 | 20,887 | 630 | 21,517 |
| 2015 | 22,282 | 672 | 22,954 |
| 2016 | 22,458 | 678 | 23,136 |
| 2017 | 23,250 | 702 | 23,952 |
| 2018 | 23,448 | 707 | 24,155 |
| 2019 | 23,560 | 711 | 24,271 |
| 2020 | 23,867 | 720 | 24,587 |
| **2021** | **23,720** | **715** | **24,435** |
| 2022 | 23,976 | 723 | 24,699 |
| 2023 | 24,235 | 730 | 24,965 |
| 2024 | 24,497 | 739 | 25,236 |
| 2025 | 24,755 | 747 | 25,502 |
| 2026 | 24,973 | 754 | 25,727 |
| 2027 | 25,193 | 760 | 25,953 |
| 2028 | 25,414 | 766 | 26,180 |
| 2029 | 25,638 | 773 | 26,411 |
| 2030 | 25,864 | 780 | 26,644 |
| 2031 | 26,053 | 786 | 26,839 |
| 2032 | 26,243 | 791 | 27,034 |
| 2033 | 26,435 | 797 | 27,232 |
| 2034 | 26,628 | 803 | 27,431 |
| 2035 | 26,826 | 809 | 27,635 |
| 2036 | 26,992 | 814 | 27,806 |
| 2037 | 27,159 | 820 | 27,979 |
| 2038 | 27,328 | 824 | 28,152 |
| 2039 | 27,497 | 829 | 28,326 |
| 2040 | 27,672 | 835 | 28,507 |
| 2041 | 27,816 | 839 | 28,655 |
| 2042 | 27,961 | 844 | 28,805 |
| 2043 | 28,106 | 848 | 28,954 |
| 2044 | 28,252 | 853 | 29,105 |
| 2045 | 28,403 | 856 | 29,259 |

1) Source: U.S. Census and the Bureau of Economic and Business Research (BEBR).

2) Seasonal population is estimated by multiplying permanent population (Item 1) by the ratio of seasonal to permanent population from the 2000 U.S. Census for years 2001-2009 and the 2010 U.S. Census for years 2011-2045. The figures are weighed by 0.42 to account for seasonal residents only residing in the Village for a portion of the year (assume 5 months; 5 months divided by 12 months = 0.42).
3) Sum of permanent population (Item 1) and seasonal population (Item 2)

# Appendix B
# Cost Component
# Building and Land Values:
# Supplemental Information

# Appendix B: Building and Land Values

This Appendix provides a summary of building and land value estimates for law enforcement and parks and recreation impact fees.

***Building Values***

To estimate building and recreational facility value, the following information was reviewed:

- Recent construction by the Village of Palm Springs, if any;
- Cost estimates for future facilities, if any;
- Insurance values of existing facilities;
- Data from other jurisdictions; and
- Discussions with the representatives from the Village.

The following paragraphs provide a summary for each service area**.**

Law Enforcement

As part of the cost estimate for the police station the following was considered:

- The Village is considering expanding the existing police station. The construction cost estimate for the expansion portion is $275 per square foot. When soft costs are added, this estimated increases to $360 per square foot.
- The insured value of the existing police station is $226 per square foot. Insurance values tend to be conservative estimates because insurance companies exclude the value of the foundation and other more permanent parts of the structure when determining insurance values since they would not have to be rebuilt if the structure was damaged or lost.
- Station cost data from other jurisdictions ranged from $200 per square foot to $350 per square foot.

Given this information a building value of $300 per square foot is used for the police station.

Recreational Facilities

Similar to law enforcement facilities, recreational facility values are based on the following:

- Construction cost of recently built facilities, if any;
- Insurance values of existing facilities;

- Facility values obtained from other jurisdictions; and
- Input from the Village representatives.

The resulting estimates are presented in Table III-5, earlier in this report.

***Land Values***

For both impact fee program areas, land values were determined based on the following analysis, as data available:

- Recent land purchases or appraisals/estimates for upcoming purchases for the related infrastructure (if any);
- Land value of current inventory as reported by the Palm Beach County Property Appraiser;
- Value of vacant land by size and by land use;
- Vacant land sales between 2017 and 2020 by size and by land use; and
- Discussions with the Village representatives.

<u>Law Enforcement</u>

The land value estimate for law enforcement facilities is based on the following:

- The Village of Palm Springs has not purchased any land for law enforcement facilities over the past five years.
- The Village is considering buying a parcel near the Municipal Complex to be used both as a park and potentially for the expansion of the police station. Estimated cost of this purchase is approximately $254,000 per acre.
- The value of the parcel where the current police station is located is $62,500 per acre. Property Appraiser land value estimates for governmental entities tend to be on the low end since these properties are not subject to property tax and the values are not always updated to reflect the market conditions.
- Vacant land sales of similarly sized parcels (between 0.05 acre and 5 acres) between 2017 and 2020 averaged $254,000 per acre with a median value of $229,000 per acre for all vacant land use types. These prices were higher for commercial properties, with an average of $298,000 per acre and a median value of $270,000 per acre.
- Similarly, the value of vacant land reported by the Property Appraiser averaged $294,000 per acre with a median value of $261,000 per acre for all vacant properties with 0.5 acres to 5 acres. For commercial properties, the average value is estimated at $379,000 per acre with a median value of $492,000 per acre.

Given this information, an average land value of **$250,000 per acre** is determined to be a reasonable estimate for law enforcement impact fee calculation purposes.

Parks

The park land value estimate is based on the following:

- The Village has not purchased any park land over the past five years; however, the Village is considering purchasing a parcel to expand the park area adjacent to the Municipal Complex. The estimated cost of this purchase is approximately $254,000 per acre.
- The value of parcels where current parks are located averages $114,000 per acre with a range of $62,000 per acre to $418,000 per acre. As mentioned previously, Property Appraiser land value estimates for governmental entities tend to be on the low end since these properties are not subject to property tax and the values are not always updated to reflect the market conditions.
- Vacant land sales of similarly sized parcels (between 0.05 acre and 5 acres) between 2017 and 2020 averaged $254,000 per acre with a median value of $229,000 per acre for all vacant land use types. Because there tends to be more flexibility in terms of location for parks, residential land values were also reviewed. Vacant residential land sales averaged $216,000 per acre with a median value of $218,000 per acre. There were no sales of any parcels larger than 5 acres over the past three years.
- The value of vacant land reported by the Property Appraiser averaged $257,000 per acre with a median value of $254,000 per acre for all vacant properties with 0.05 acre to 10 acres. For residential properties, the average value is estimated at $173,000 per acre with a median value of $183,000 per acre.

Given this information, an average land value of **$250,000 per acre** is determined to be a reasonable estimate for parks and recreational facilities impact fee calculation purposes.

A bill to be entitled

An act relating to impact fees; amending s. 163.31801, F.S.; defining the terms "infrastructure" and "public facilities"; requiring local governments and special districts to credit against the collection of impact fees any contribution related to public facilities or infrastructure; providing conditions under which credits may not be applied; providing limitations on impact fee increases; providing for retroactive operation; requiring specified entities to submit an affidavit attesting that impact fees were appropriately collected and expended; providing that impact fee credits are assignable and transferable regardless of when they the credits were established; requiring school districts to report specified information regarding impact fees; providing a directive to the Division of Law Revision; providing an effective date.

Be It Enacted by the Legislature of the State of Florida:

Section 1. Section 163.31801, Florida Statutes, is amended to read:

163.31801 Impact fees; short title; intent; minimum requirements; audits; challenges.—

(1) This section may be cited as the "Florida Impact Fee Act."

(2) The Legislature finds that impact fees are an important source of revenue for a local government to use in funding the infrastructure necessitated by new growth. The Legislature further finds that impact fees are an outgrowth of the home rule power of a local government to provide certain services within its jurisdiction. Due to the growth of impact fee collections and local governments' reliance on impact fees, it is the intent of the Legislature to ensure that, when a county or municipality adopts an impact fee by ordinance or a special district adopts an impact fee by resolution, the governing authority complies with this section.

(3) For purposes of this section, the term:

(a) "Infrastructure" means a fixed capital expenditure or fixed capital outlay, excluding the cost of repairs or maintenance, associated with the construction, reconstruction, or improvement of public facilities that have a life expectancy of at least 5 years; related land acquisition, land improvement, design, engineering, and permitting costs; and other related construction costs required to bring the public facility into service. The term also includes a fire department vehicle, an emergency medical service vehicle, a sheriff's office vehicle, a police department vehicle, a school bus as defined in s. 1006.25, and the equipment necessary to outfit the vehicle or

bus for its official use. For independent special fire control districts, the term includes new facilities as defined in s. 191.009(4).

(b) "Public facilities" has the same meaning as in s. 163.3164 and includes emergency medical, fire, and law enforcement facilities.

(4)~~(3)~~ At a minimum, each local government that adopts and collects an impact fee by ordinance and each special district that adopts, collects, and administers an impact fee by resolution must ~~an impact fee adopted by ordinance of a county or municipality or by resolution of a special district must satisfy all of the following conditions~~:

(a) Ensure that the calculation of the impact fee is ~~must be~~ based on the most recent and localized data.

(b) ~~The local government must~~ Provide for accounting and reporting of impact fee collections and expenditures and~~. If a local governmental entity imposes an impact fee to address its infrastructure needs, the entity must~~ account for the revenues and expenditures of such impact fee in a separate accounting fund.

(c) Limit administrative charges for the collection of impact fees ~~must be limited~~ to actual costs.

(d) ~~The local government must~~ Provide notice at least ~~not less than~~ 90 days before the effective date of an ordinance or resolution imposing a new or increased impact fee. A local

government ~~county or municipality~~ is not required to wait 90 days to decrease, suspend, or eliminate an impact fee. Unless the result is to reduce the total mitigation costs or impact fees imposed on an applicant, new or increased impact fees may not apply to current or pending permit applications submitted before the effective date of ~~an ordinance or resolution imposing~~ a new or increased impact fee.

(e) Ensure that collection of the impact fee may not be required to occur earlier than the date of issuance of the building permit for the property that is subject to the fee.

(f) Ensure that the impact fee is ~~must be~~ proportional and reasonably connected to, or has ~~have~~ a rational nexus with, the need for additional capital facilities and the increased impact generated by the new residential or commercial construction.

(g) Ensure that the impact fee is ~~must be~~ proportional and reasonably connected to, or has ~~have~~ a rational nexus with, the expenditures of the funds collected and the benefits accruing to the new residential or nonresidential construction.

(h) ~~The local government must~~ Specifically earmark funds collected under the impact fee for use in acquiring, constructing, or improving capital facilities to benefit new users.

(i) Ensure that revenues generated by the impact fee are ~~may~~ not ~~be~~ used, in whole or in part, to pay existing debt or for previously approved projects unless the expenditure is

reasonably connected to, or has a rational nexus with, the increased impact generated by the new residential or nonresidential construction.

(5)(a) ~~(4)~~ Notwithstanding any charter provision, comprehensive plan policy, ordinance, development order, development permit, or resolution, the local government or special district must credit against the collection of the impact fee any contribution, whether identified in a proportionate share agreement or other form of exaction, related to public ~~education~~ facilities or infrastructure, including land dedication, site planning and design, or construction. Any contribution must be applied on a dollar-for-dollar basis at fair market value to reduce any ~~education-based~~ impact fee collected for the general category or class of public facilities or infrastructure for which the contribution was made ~~fees on a dollar-for-dollar basis at fair market value~~.

(b) If a local government or special district does not charge and collect an impact fee for the general category or class of public facilities or infrastructure contributed, a credit may not be applied under paragraph (a).

(6) ~~(5)~~ A local government, school district, or special district may increase an impact fee only as provided in this subsection.

(a) An impact fee may be increased only pursuant to a plan for the imposition, collection, and use of the increased impact

fees which complies with this section.

(b) An increase to a current impact fee rate of not more than 25 percent of the current rate must be implemented in two equal annual increments beginning with the date on which the increased fee is adopted.

(c) An increase to a current impact fee rate which exceeds 25 percent but is not more than 50 percent of the current rate must be implemented in four equal installments beginning with the date the increased fee is adopted.

(d) An impact fee increase may not exceed 50 percent of the current impact fee rate.

(e) An impact fee may not be increased more than once every 4 years.

(f) An impact fee may not be increased retroactively for a previous or current fiscal or calendar year.

(g) A local government, school district, or special district may increase an impact fee rate beyond the phase-in limitations established under paragraph (b), paragraph (c), paragraph (d), or paragraph (e) by establishing the need for such increase in full compliance with the requirements of subsection (4), provided the following criteria are met:

1. A demonstrated need study justifying any increase in excess of those authorized in paragraph (b), paragraph (c), paragraph (d), or paragraph (e) has been completed within the 12 months before the adoption of the impact fee increase and

expressly demonstrates the extraordinary circumstances necessitating the need to exceed the phase-in limitations.

2. The local government jurisdiction has held not less than two publicly noticed workshops dedicated to the extraordinary circumstances necessitating the need to exceed the phase-in limitations set forth in paragraph (b), paragraph (c), paragraph (d), or paragraph (e).

3. The impact fee increase ordinance is approved by at least a two-thirds vote of the governing body.

(h) This subsection operates retroactively to January 1, 2021.

(7) If an impact fee is increased ~~a local government increases its impact fee rates~~, the holder of any impact fee credits, whether such credits are granted under s. 163.3180, s. 380.06, or otherwise, which were in existence before the increase, is entitled to the full benefit of the intensity or density prepaid by the credit balance as of the date it was first established. ~~This subsection shall operate prospectively and not retrospectively.~~

(8)~~(6)~~ A local government, school district, or special district must submit with its annual financial report required under s. 218.32 or its financial audit report required under s. 218.39 a separate affidavit signed by its chief financial officer or, if there is no chief financial officer, its executive officer attesting, to the best of his or her

knowledge, that all impact fees were collected and expended by the local government, school district, or special district, or were collected and expended on its behalf, in full compliance with the spending period provision in the local ordinance or resolution, and that funds expended from each impact fee account were used only to acquire, construct, or improve specific infrastructure needs ~~Audits of financial statements of local governmental entities and district school boards which are performed by a certified public accountant pursuant to s. 218.39 and submitted to the Auditor General must include an affidavit signed by the chief financial officer of the local governmental entity or district school board stating that the local governmental entity or district school board has complied with this section~~.

(9) ~~(7)~~ In any action challenging an impact fee or the government's failure to provide required dollar-for-dollar credits for the payment of impact fees as provided in s. 163.3180(6)(h)2.b., the government has the burden of proving by a preponderance of the evidence that the imposition or amount of the fee or credit meets the requirements of state legal precedent and this section. The court may not use a deferential standard for the benefit of the government.

(10) ~~(8)~~ Impact fee credits are assignable and transferable at any time after establishment from one development or parcel to any other that is within the same impact fee zone or impact

fee district or that is within an adjoining impact fee zone or impact fee district within the same local government jurisdiction and which receives benefits from the improvement or contribution that generated the credits. This subsection applies to all impact fee credits regardless of whether the credits were established before or after the effective date of this act.

(11) ~~(9)~~ A county, municipality, or special district may provide an exception or waiver for an impact fee for the development or construction of housing that is affordable, as defined in s. 420.9071. If a county, municipality, or special district provides such an exception or waiver, it is not required to use any revenues to offset the impact.

(12) ~~(10)~~ This section does not apply to water and sewer connection fees.

(13) ~~(11)~~ In addition to the items that must be reported in the annual financial reports under s. 218.32, a local government, school district ~~county, municipality~~, or special district must report all of the following information ~~data~~ on all impact fees charged:

(a) The specific purpose of the impact fee, including the specific infrastructure needs to be met, including, but not limited to, transportation, parks, water, sewer, and schools.

(b) The impact fee schedule policy describing the method of calculating impact fees, such as flat fees, tiered scales based on number of bedrooms, or tiered scales based on square

footage.

(c) The amount assessed for each purpose and for each type of dwelling.

(d) The total amount of impact fees charged by type of dwelling.

(e) Each exception and waiver provided for construction or development of housing that is affordable.

Section 2. The Division of Law Revision is directed to replace the phrase "the effective date of this act" wherever it occurs in this act with the date the act becomes a law.

Section 3. This act shall take effect upon becoming a law.

**NOTICE OF PROPOSED IMPACT FEE WORKSHOPS**

In accordance with Section 163.31801, Florida Statutes, the Village Council of the Village of Palm Springs, Florida hereby provides notice of two (2) scheduled workshops to discuss the extent to which extraordinary circumstances necessitate and justify the need for proposed impact fees to fund Law Enforcement and Parks & Recreation improvements necessitated by growth and development.

Public Workshops will be held in the Council Chambers at Village Hall, 226 Cypress Lane, Palm Springs, Florida, on the following dates:

Village Council, Thursday, May 13, 2021, at 6:30 PM
Village Council, Thursday, June 10, 2021 at 6:30 PM

The impact fee study may be inspected at the Office of the Village Clerk during business hours, Monday through Friday between 8:30 a.m. and 4:30 p.m. All interested parties may appear at the meeting and be heard with respect to the proposed ordinance at the public hearing.

If a person decides to appeal any decision made by the above Village Council with respect to any matter considered at such hearing, he or she will need a record of the proceedings, and for such purpose may need to ensure that a verbatim record of the proceeding is made, which record includes the testimony and evidence upon which the appeal is to be based. Persons who need an accommodation to attend or participate in this meeting should contact the Village Clerk at (561) 965-4010 at least three (3) days prior to the meeting to request such assistance.

Kimberly Wynn, Village Clerk
April 29, 2021
PUBLISH: Lake Worth Herald

# Village of Palm Springs

# Executive Brief

**AGENDA DATE:** May 13, 2021

**DEPARTMENT:** Administration

---

**ITEM 10.1:** Presentation - Transportation / Mobility Study

**SUMMARY:** Mr. Ed Ng, Eric Czerniejewski and Mark Alvarez from The Corradino Group will present their progress on the Village's Transportation/Mobility Study, and seek Village Council input on potential solutions to identified issues and potential policy directives for future action.

**FISCAL IMPACT:**
Recommendations from the Transportation/Mobility Study might be included as capital projects in future fiscal years' CIP Budget and/or General Operating Budget.

**ATTACHMENTS:**
Transportation / Mobility Plan Update - The Corradino Group

# Village of Palm Springs Transportation/Mobility Master Plan

- Presentation to Village Council

May 13, 2021

# Agenda

- Introduction
- Scope and Schedule
- Analysis/Potential solutions and policy needs
- Project Prioritization Criteria
- Questions and answer, discussion



# Study Objectives

- Review current traffic issues, including vehicular travel, and roadway configurations and develop recommendations for improvement while taking into consideration future planned development opportunities.
- Review bicycle and pedestrian facilities and develop policy and project recommendations to improve accessibility to businesses, residential, public/civic facilities, and effect first and last mile connections to Palm Tran.
- Establish basis for local transit needs.
- Establish an overall mobility plan for the Village with projects developed by category:
  - Roadway
  - Bicycle
  - Pedestrian
  - Transit
  - Policy

# Study Area

- Village of Palm Springs
- Additional areas within the Village's Future Annexation Area

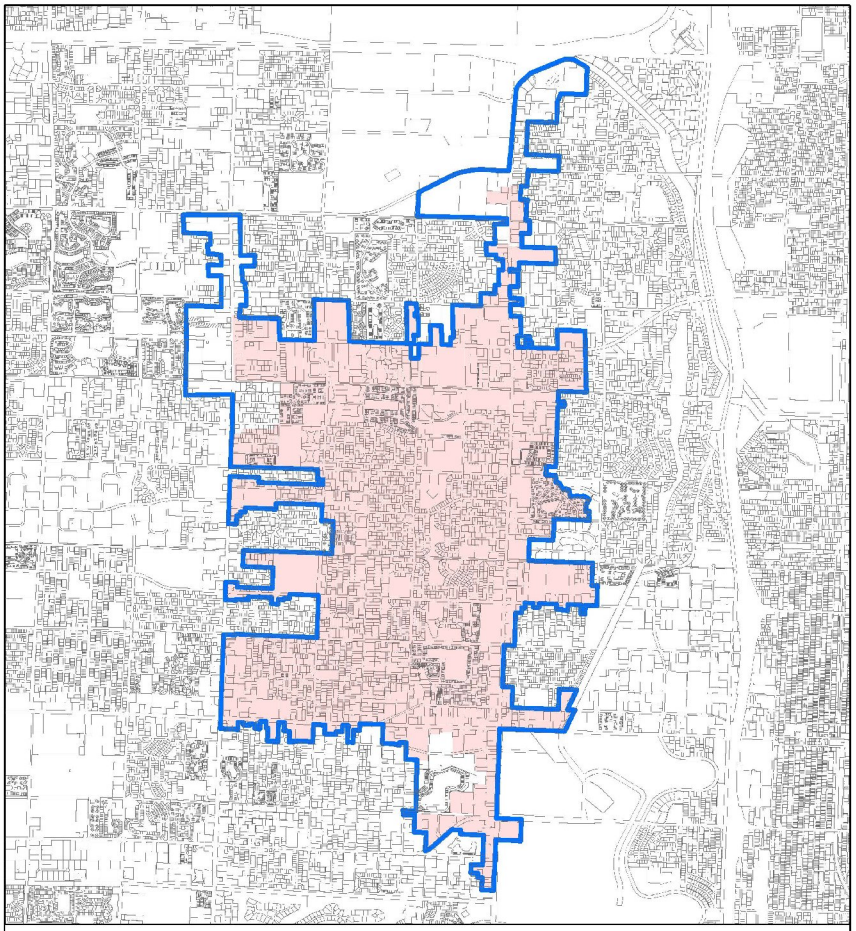

# Project Tasks and Projected Timeline



# Roadway Assessment

z

- **Traffic Data Collection-** Palm Beach County Traffic Engineering Division and FDOT published recent traffic counts used. Additional intersection turning movement counts and speed/volume tube counts collected.
- **Traffic Operational Analysis** was completed at 31 key intersections for the AM and PM peak hours for 2020 existing and 2030 future conditions.
- **Road Segment Link Analysis** was completed at 22 north-south and 19 east-west roadways for the 2020 existing and 2030 future conditions.
- **Speed Evaluation** was completed for nine roadway corridor segments
- **Safety Review/Evaluation** was completed for the 22 north-south and 19 east-west roadways

# Vehicular Traffic

Summary of results

- 6 roadways segments will fail to meet adopted Level of Service in the future (2030)
- 17 of 34 Intersections will fail to meet acceptable levels of service by 2030
- Evaluated 9 locations for speeding concerns – 8 locations have speeding issues
- Evaluation of crash locations

# Vehicular Traffic

- Military Trail- Southern Boulevard to Forest Hill Boulevard- LOS E in 2030
- Congress Avenue- 10th Avenue to Lake Worth Road- LOS E in 2030
- Forest Hill Boulevard- Kirk Road to Congress Avenue- LOS E in 2030
- Forest Hill Boulevard- Congress Avenue to I-95- LOS E in 2020 and LOS F in 2030
- 10th Avenue- Kirk Road to Congress Avenue- LOS E in 2020 and LOS F in 2030
- Melaleuca Lane- Congress Avenue to I-95- LOS E in 2020 and LOS F in 2030

# Vehicular Traffic (Intersections)

- Military Trail and Gun Club Road- LOS F in 2020 and in 2030 AM;
- Kirk Road and Gun Club Road- LOS E in 2020 and LOS F in 2030 AM; LOS E in 2030 PM
- Military Trail and Summit Boulevard- LOS E in 2030 AM; LOS E in 2020 PM and LOS F in 2030 PM
- Kirk Road and Summit Boulevard- LOS E in 2030 PM;
- Congress Avenue and Summit Boulevard- LOS F in 2020 and in 2030 AM; LOS E in 2020 and LOS F in 2030 PM;
- Military Trail and Forest Hill Boulevard- LOS E in 2020 and in 2030 AM; LOS F in 2020 and in 2030 PM;
- Kirk Road and Forest Hill Boulevard- LOS E in 2020 and in 2030 AM; LOS F in 2020 and in 2030 PM;
- Congress Avenue and Forest Hill Boulevard- LOS F in 2020 and in 2030 AM; LOS F in 2020 and in 2030 PM;
- Florida Mango Road and Forest Hill Boulevard- LOS E in 2020 and in 2030 AM; LOS E in 2020 and in 2030 PM;
- Military Trail and Alemeda Drive- LOS E in 2020 and in 2030 PM;
- Military Trail and 10th Avenue- LOS E in 2020 and in 2030 AM; LOS F in 2020 and in 2030 PM;
- Congress Avenue and 10th Avenue- LOS E in 2030 AM; LOS E in 2020 and LOS F in 2030 PM;
- Florida Mango Road and 10th Avenue- LOS F in 2020 and in 2030 PM;
- Military Trail and Lake Worth Road- LOS F in 2020 and in 2030 AM; LOS F in 2020 and in 2030 PM;
- Congress Avenue and Lake Worth Road- LOS E in 2020 and LOS F in 2030 AM; LOS F in 2020 and in 2030 PM;
- Military Trail and Melaleuca Lane- LOS E in 2020 and in 2030 AM; LOS F in 2020 and in 2030 PM; Kirk Road and Melaleuca Lane- LOS F in 2030 PM;
- Congress Avenue and Melaleuca Lane- LOS F in 2020 and 2030 AM; LOS F in 2020 and in 2030 PM;

# Areas of Speeding Concern

z

- 10th Avenue N between Kirk Road and S. Congress Avenue (4 mph over posted speed limit)
- S. Congress Avenue between Forest Hill Boulevard and Summit Boulevard (8 to 11 mph over posted speed limit)
- Dolan Road between S. Congress Avenue and Kirk Road (11 to 19 mph over posted speed limit)
- Davis Road between Greenbrier Drive and 10th Avenue N (6 to 11 mph over the posted speed limit)
- Lake Worth Road between Kirk Road and S. Congress Avenue (6 to 8 mph over the posted speed limit)
- Lillian Road between S. Congress Avenue and Davis Road (10 to 13 mph over the posted speed limit)
- Lorene Drive (8 to 10 mph over the posted speed limit)

# Overall Road Segment Crash Rankings

- Alemeda Drive- Military Trail to Congress Avenue: 27.42 Crash Rate
- Gun Club Road- Military Trail to Kirk Road: 15.31 Crash Rate
- Summit Blvd.- Military Trail to Kirk Road: 15.19 Crash Rate
- Kirk Road- 10th Avenue to Lake Worth Road: 13.80 Crash Rate
- Kirk Road- Lake Worth Road to Melaleuca Lane: 12.75 Crash Rate
- Kirk Road- Summit Blvd. to Forest Hill Blvd.: 12.71 Crash Rate
- Summit Blvd.- Between Congress Avenue to Florida Mango Rd: 12.47 Crash Rate
- Kirk Road- Forest Hill Blvd. to Greenbrier Drive: 11.41 Crash Rate
- Davis Road- Summit Blvd. to Alemeda Drive: 10.40 Crash Rate
- Congress Avenue- 10th Avenue to Lake Worth Road: 9.83 Crash Rate

# Overall Road Segment- Fatalities

- Military Trail- Southern Blvd. to Forest Hill Blvd- 8 fatalities
- Lake Worth Road- Military Trail to Davis Road- 5 fatalities
- Military Trail- Forest Hill Blvd to 10th Avenue- 5 fatalities
- Forest Hill Blvd.- Between Congress Road to I-95- 4 fatalities
- Forest Hill Blvd.- Military Trail to Congress Road- 3 fatalities
- Melaleuca Lane- Congress Avenue to I-95- 3 fatalities

# Overall Road Segment- Bicycle and Pedestrian Crashes

- Military Trail- Southern Blvd. to Forest Hill Blvd- 28 bike and pedestrian crashes
- Lake Worth Road- Military Trail to Davis Road- 26 bike and pedestrian crashes
- Congress Avenue- 10th Avenue to Lake Worth Road- 25 bike and pedestrian crashes
- Military Trail- Forest Hill Blvd to 10th Avenue- 24 bike and pedestrian crashes
- Forest Hill Blvd.- Military Trail to Congress Road- 20 bike and pedestrian crashes
- Lake Worth Road- Congress Avenue to I-95- 15 bike and pedestrian crashes
- Melaleuca Lane- Military Trail to Davis Road- 14 bike and pedestrian crashes
- Congress Avenue- Forest Hill Blvd. to 10th Avenue- 13 bike and pedestrian crashes
- Forest Hill Blvd.- Between Congress Road to I-95- 13 bike and pedestrian crashes
- 10th Avenue- Military Trail to Davis Road- 13 bike and pedestrian crashes

# Traffic Operational Improvements- Intersections

| Traffic Operational Improvements- Intersections | | | |
|---|---|---|---|
| Number | Intersection Name | Peak Period | Scope of Mitigation Improvements |
| 1 | Military Trail and Gun Club Road | AM | Addition of dual eastbound and westbound left turn lanes; addition of eastbound right turn lane; addition of northbound right turn lane; traffic signal timing optimization |
| 2 | Kirk Road and Gun Club Road | AM | Addition of eastbound right turn lane; traffic signal timing optimization |
| 3 | Congress Avenue and Summit Blvd | Both | Addition of eastbound and westbound dual left turn lanes; traffic signal optimization |
| 4 | Congress Avenue and Forest Hill Blvd | Both | Addition of northbound, eastbound and westbound right turn lanes; traffic signal timing optimization |
| 5 | Military Trail and Lake Worth Road | Both | Addition of a southbound and eastbound righ turn lane; traffic signal optimization |
| 6 | Congress Avenue and Lake Worth Road | Both | Addition of a dual southbound left turn lane; traffic signal optimization |
| 7 | Congress Avenue and Melaleuca Lane | Both | Addition of eastbound and westbound through lanes; addition of a southbound through lane; traffic signal timing optimization |
| 8 | Military Trail and Summit Blvd | PM | Addition of dual northbound and southbound left turn lanes; traffic signal timing optimization |
| 9 | Military Trail and Forest Hill Blvd | PM | Addition of northbound /southbound dual left turn lanes; addition of a northbound and southbound right turn lanes; traffic signal optimization |
| 10 | Kirk Road and Forest Hill Blvd | PM | Addition of dual eastbound/westbound left turn lanes; addition of eastbound/westbound right turn lanes; traffic signal timing |
| 11 | Military Trail and 10th Avenue | PM | Addition of northbound, eastbound and westbound right turn lanes; traffic signal timing optimization |
| 12 | Congress Avenue and 10th Avenue | PM | Addition of northbound right turn lane; traffic signal timing optimization |
| 13 | Florida Mango Road and 10th Avenue | PM | Addition of dual eastbound and westbound left turn lanes; traffic signal timing optimization |
| 14 | Kirk Road and Melaleuca Lane | PM | Addition of eastbound right turn lane; traffic signal timing optimization |
| 15 | Kirk Road and Lakewood Road | Both | Conversion from traffic signal to Roundabout if feasible |
| 16 | Davis Road and 2nd Avenue North | Both | Conversion of all way stop to Roundabout if feasible |

# Traffic Calming Improvements- Road Segments/Intersections

| Traffic Calming Improvements- Road Segments/Intersections | | | |
|---|---|---|---|
| Number | Road Segment/Intersection Name | Year | Scope of Mitigation Improvements |
| 1 | 10th Avenue- Between Kirk Road and Congress Avenue | 2020 | Installation of speed radar signs pending traffic study approval |
| 2 | Congress Avenue- Between Forest Hill Blvd and Summit Blvd | 2020 | Installation of speed radar signs pending traffic study approval |
| 3 | Alemeda Drive- Between S. Congress and Kirk Road | 2020 | Evaluate a neighborhood traffic circle at Davis Road and Alemeda Drive; Evaluate speed tables along Alemeda Drive |
| 4 | Davis Road- Between Green Briar Drive and 10th Avenue N | 2020 | Evaluate a neighborhood traffic circle at Davis Road and Riverdale Road or Winged Foot Road; Evaluate speed tables along Davis Road |
| 5 | Lake Worth Road- Between Kirk and S. Congress Avenue | 2020 | Installation of speed radar signs pending traffic study approval |
| 6 | Lillian Road- Between Congress Avenue and Lori Drive | 2020 | Evaluate speed tables along Lilian Road |
| 7 | Lorene Drive east of Congress Avenue | 2020 | Evaluate speed tables along Lorene Drive |
| 8 | Melaleuca Lane- Between Kirk Road and Davis Road | 2020 | Installation of speed radar signs pending traffic study approval |
| 9 | Park Lane/Greenbrier Drive- Between Kirk Road and Congress Avenue | 2020 | Evaluate neighborhood traffic circles at the intersections of Davis Road and Gulfstream Road; Evaluate speed tables on Greenbrier Drive |

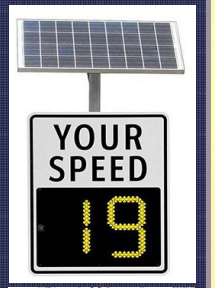










Important note: On neighborhood streets and minor roadways, the neighborhood is responsible, per Village code as it relates to traffic calming benefits, for providing the study and for the actual improvement, and must provide the recommendations and design schematics for permit review.

# Safety Improvements- High Crash Locations

z

| Safety Improvements- High Crash Locations | | | |
|---|---|---|---|
| Number | Road Segment/Intersection Name | Year | Scope of Safety Improvements |
| 1 | Alemeda Drive- Military Trail to Congress Avenue | 2021 | Perform Corridor Safety Study to mitigate for high crash location |
| 2 | Gun Club Road- Military Trail to Kirk Road | 2021 | Perform Corridor Safety Study to mitigate for high crash location |
| 3 | Summit Blvd.- Military Trail to Kirk Road | 2021 | Perform Corridor Safety Study to mitigate for high crash location |
| 4 | Kirk Road- 10th Avenue to Lake Worth Road | 2021 | Perform Corridor Safety Study to mitigate for high crash location |
| 5 | Kirk Road- Lake Worth Road to Melaleuca Lane | 2021 | Perform Corridor Safety Study to mitigate for high crash location |
| 6 | Kirk Road- Summit Blvd. to Forest Hill Blvd. | 2021 | Perform Corridor Safety Study to mitigate for high crash location |
| 7 | Summit Blvd.- Between Congress Avenue to Florida Mango Rd | 2021 | Perform Corridor Safety Study to mitigate for high crash location |
| 8 | Kirk Road- Forest Hill Blvd. to Greenbrier Drive | 2021 | Perform Corridor Safety Study to mitigate for high crash location |
| 9 | Congress Avenue- 10th Avenue to Lake Worth Road | 2021 | Perform Corridor Safety Study to mitigate for high crash location; high pedestrian and bicycle crash |

# Safety Improvements- Bicycle and Pedestrian Crashes

| Safety Improvements- High Bicycle and Pedestrian Crashes | | | |
|---|---|---|---|
| Number | Road Segment/Intersection Name | Year | Scope of Safety Improvements |
| 10 | Congress Avenue- 10th Avenue to Lake Worth Road | 2021 | Perform Corridor Safety Study to mitigate for high crash location; high pedestrian and bicycle crash |
| 11 | Military Trail- Southern Blvd. to Forest Hill Blvd | 2021 | Perform Corridor Safety Study to mitigation pedestrian and bicycle crash location |
| 12 | Lake Worth Road- Military Trail to Davis Road | 2021 | Perform Corridor Safety Study to mitigate for high pedestrian and bicycle crash location |
| 13 | Military Trail- Forest Hill Blvd to 10th Avenue | 2021 | Perform Corridor Safety Study to mitigate for high pedestrian and bicycle crash location |
| 14 | Forest Hill Blvd.- Military Trail to Congress Road | 2021 | Perform Corridor Safety Study to mitigate for high pedestrian and bicycle crash location |
| 15 | Lake Worth Road- Congress Avenue to I-95 | 2021 | Perform Corridor Safety Study to mitigate for high pedestrian and bicycle crash location |
| 16 | Melaleuca Lane- Military Trail to Davis Road | 2021 | Perform Corridor Safety Study to mitigate for high pedestrian and bicycle crash location |
| 17 | Congress Avenue- Forest Hill Blvd. to 10th Avenue | 2021 | Perform Corridor Safety Study to mitigation pedestrian and bicycle crash location |
| 18 | Forest Hill Blvd.- Between Congress Road to I-95 | 2021 | Perform Corridor Safety Study to mitigation pedestrian and bicycle crash location |
| 19 | 10th Avenue- Military Trail to Davis Road | 2021 | Perform Corridor Safety Study to mitigate for high pedestrian and bicycle crash location |

# Pedestrian Network

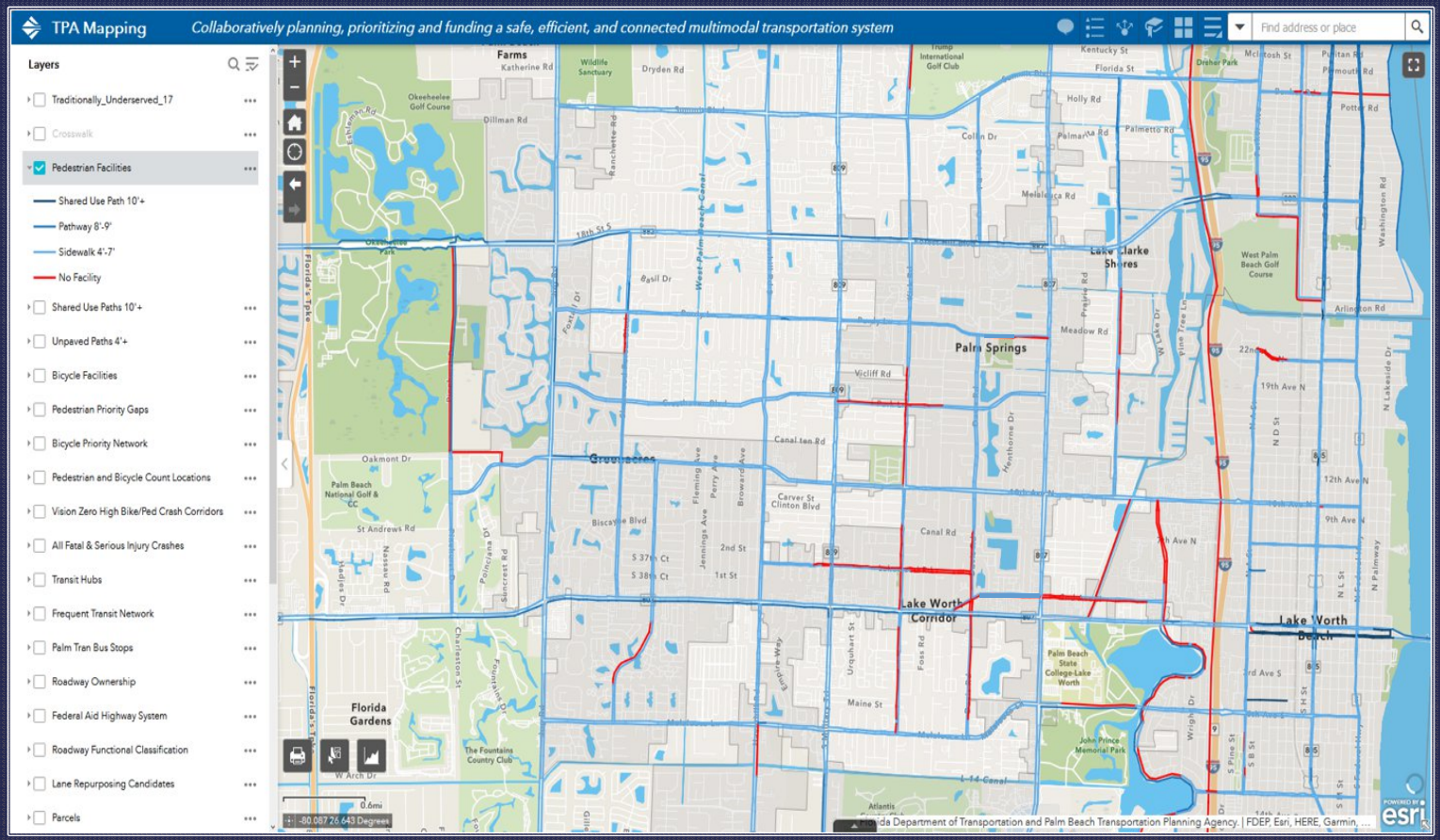

# Planned Park Connector Pathways

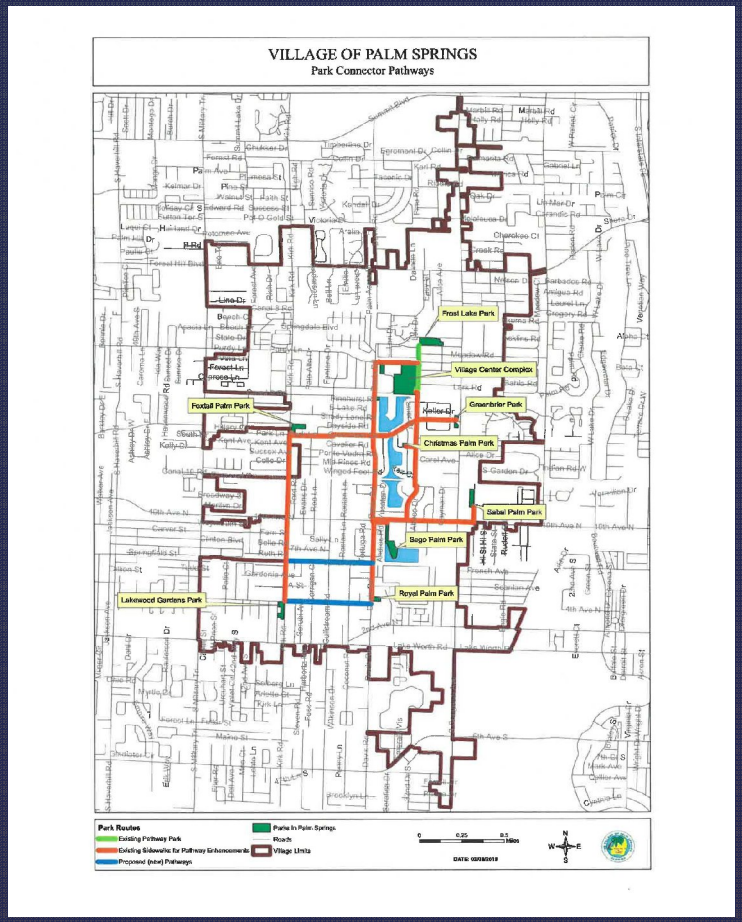

# Bicycle Network

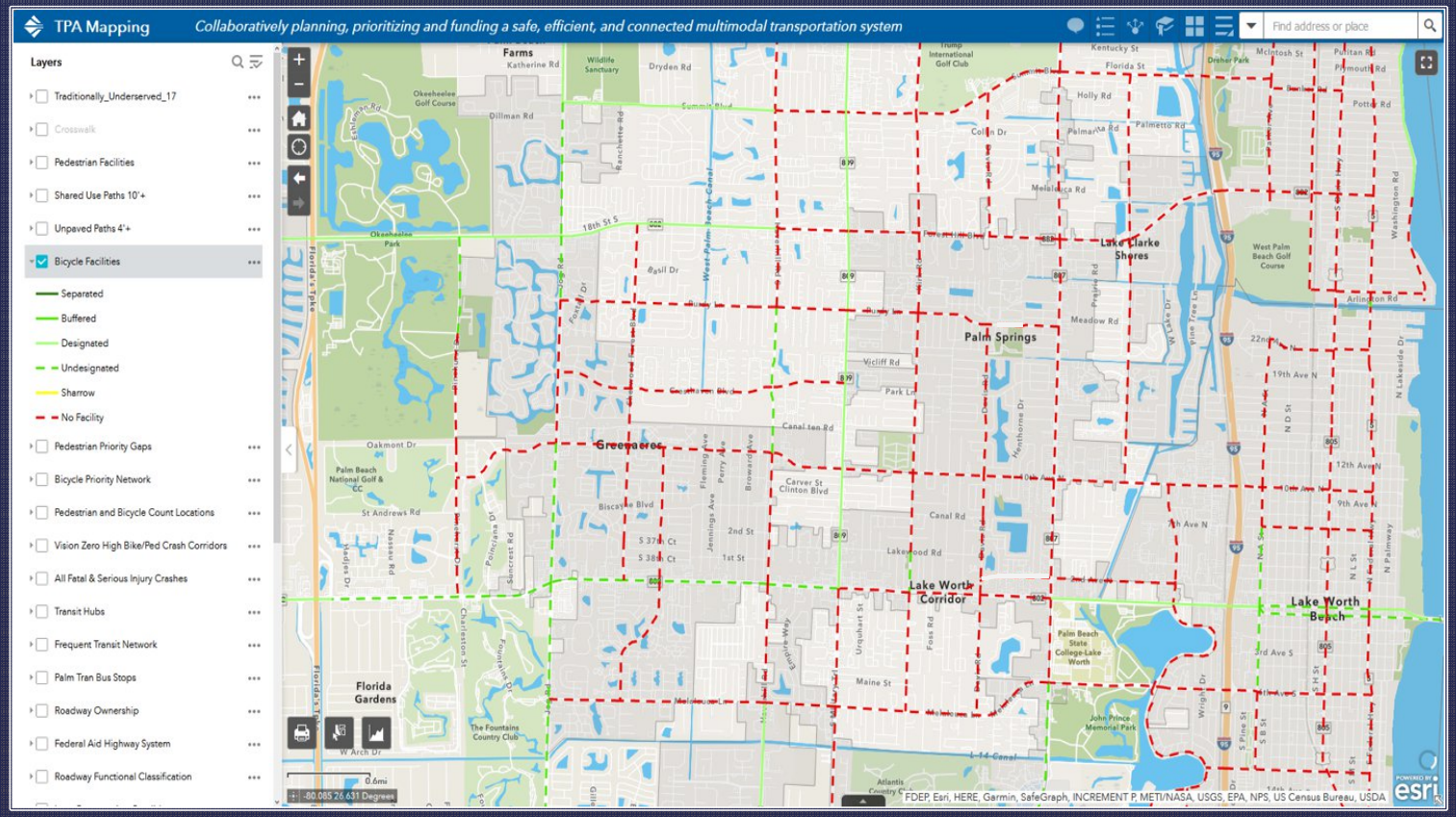


Red = No facilities

# Transit Routes

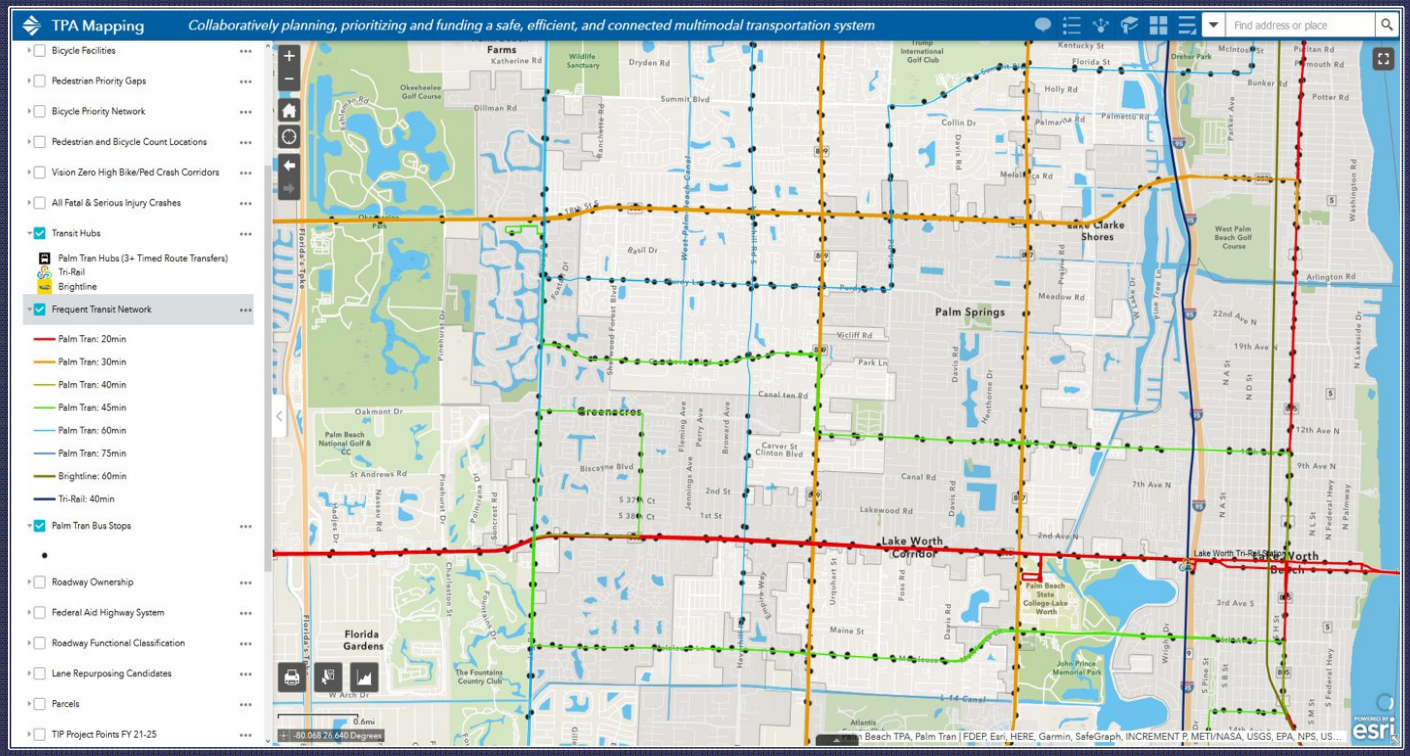

# Pedestrian and Bicycle Facilities

Summary

- Evaluation approach looked at “Level of Stress” – different methodology to account for comfort
- Bicycle and Pedestrian facilities have widespread gaps that serve as candidates for system completion
- Grid has a lack of N-S and E-W parallel paths that make implementation of alternatives difficult
- Future facilities development should include Complete Streets and Vision Zero – Village’s policies will need revision
- System has potential to be more age friendly
- Recreational system is easier to implement. Commuter based system on major roadways such as Congress Avenue have issues with available right of way.

# Pedestrian and Bicycle Facilities

- Park Connector network should serve as in initial “grid” for implementation.
- Subsequent pathways should be completed on a block by block or section by section basis emanating from this network, with priority for first and last mile connectivity to transit.
- Bicycle routes should be “offset” from arterials and focused on Village collector and local roads.
- East – West Connectors
  - Separated facilities would be needed on roadways like Lake Worth Road, which has no space unless lanes are reduced or ROW is acquired
  - Alternatives – Prioritize bicycle and mixed-use pathways along canals or roadways like Greenbrier Drive
- North-South Connectors
  - Similar issues as East – West Connectors with space (example, Congress Avenue)
  - Bicycle and mixed-use pathways will require new pedestrian bridges like the one on Henthorne Drive that connects to Village facilities
  - Davis Road and Kirk Road are better candidates than regional arterials for implementing bicycle paths

# Transit Recommendations

- Focus on existing Palm Tran Routes and “first-last mile” connectivity (Pedestrian and Bicycle projects)
- Local circulator – **wait**, but set up policy framework for
  - Developer Contributions
  - Draft pilot program for if monies are available
  - Pilot program, given size and population, should be geared toward small, on-demand shuttles

# Prioritization Criteria

- Complete Streets Implementation/Network Completion
  - Prioritize 1st and last mile connections to transit
  - Prioritize infill of gaps
- Relieves Congestion/Improves Traffic Operations
- Effect on Safety
- Addresses Level of Stress issues
- Cost/Cost Effectiveness
- Ease of Implementation

# Discussion



# Contact Information

- *Village Staff*

**Kim Glas-Castro, AICP LEED AP**
Assistant Village Manager
Village of Palm Springs
(561) 965-4016
kglas-castro@vpsfl.org

- *Consultant Team*

**Edward Ng, AICP**
The Corradino Group
4055 N.W. 97th Avenue, Suite 200
Doral, Florida 33178
eng@corradino.com

# Speed Data Summary

| Road Segment | Direction | Percentiles | | | | |
|---|---|---|---|---|---|---|
| | | 85th | Average | Median | Posted Speed | ADT |
| *Congress Avenue (N-S)* | | | | | | |
| Forest Hill Boulevard to Summit Boulevard | Northbound | 51 | 45 | 45 | 40 | 24,216 |
| | Southbound | 48 | 40 | 40 | 40 | |
| *Davis Road (N-S)* | | | | | | |
| Greenbrier Drive to 10th Avenue | Northbound | 36 | 30 | 30 | 25 | 3,167 |
| | Southbound | 31 | 26 | 26 | 25 | |
| *Lilian Road (E-W)* | | | | | | |
| Congress Avenue to Lori Drive | Eastbound | 33 | 27 | 27 | 20 | 2,859 |
| | Westbound | 30 | 25 | 25 | 20 | |
| *Dolan Road (E-W)* | | | | | | |
| Congress Avenue to Kirk Road | Eastbound | 36 | 30 | 30 | 25 | 4,933 |
| | Westbound | 44 | 35 | 33 | 25 | |
| *Lorene Drive (E-W)* | | | | | | |
| East of Congress Avenue | Eastbound | 30 | 22 | 22 | 20 | 171 |
| | Westbound | 28 | 20 | 19 | 20 | |
| *Park Lane (E-W)* | | | | | | |
| Kirk Road to Congress Avenue | Eastbound | 33 | 28 | 28 | 25 | 4,416 |
| | Westbound | 32 | 27 | 27 | 25 | |
| *10th Avenue (E-W)* | | | | | | |
| Kirk Road to Congress Avenue | Eastbound | 44 | 37 | 38 | 40 | 27,772 |
| | Westbound | 44 | 38 | 38 | 40 | |
| *Lake Worth Road (E-W)* | | | | | | |
| Kirk Road to Congress Avenue | Eastbound | 48 | 40 | 40 | 40 | 26,697 |
| | Westbound | 46 | 40 | 40 | 40 | |
| *Melaleuca Lane (E-W)* | | | | | | |
| Kirk Road to Davis Road | Eastbound | 49 | 42 | 43 | 45 | 24,610 |
| | Westbound | 45 | 38 | 38 | 45 | |

# Crash Report Summary

| North-South Roadway Corridors | Length (miles) | Number of Crashes (Overall) | Volume (AADT) | Crash Rate | Number of Crashes (Injury) | Number of Crashes (Fatal) | Number of Crashes (Pedestrian) | Number of Crashes (Bicycle) |
|---|---|---|---|---|---|---|---|---|
| Military Trail- Southern Blvd. to Forest Hill Blvd | 1.80 | 1300 | 49,711 | 7.96 | 309 | 8 | 16 | 12 |
| Military Trail- Forest Hill Blvd to 10th Avenue | 1.52 | 889 | 43,627 | 7.35 | 211 | 5 | 10 | 14 |
| Military Trail- 10th Avenue to Lake Worth Road | 0.76 | 379 | 40,239 | 6.79 | 112 | 2 | 7 | 2 |
| Military Trail- Lake Worth Road to Melaleuca Lane | 0.76 | 299 | 37,455 | 5.76 | 69 | 2 | 7 | 1 |
| Kirk Road- Southern Blvd. to Gun Club Road | 0.28 | 6 | 11,983 | 0.98 | 2 | 0 | 0 | 0 |
| Kirk Road- Gun Club Road to Summit Blvd. | 0.75 | 66 | 11,158 | 4.32 | 28 | 0 | 0 | 0 |
| Kirk Road- Summit Blvd. to Forest Hill Blvd. | 0.76 | 189 | 10,720 | 12.71 | 42 | 1 | 2 | 2 |
| Kirk Road- Forest Hill Blvd. to Greenbrier Drive | 1.00 | 359 | 17,246 | 11.41 | 75 | 0 | 2 | 2 |
| Kirk Road- Greenbrier Drive to 10th Avenue | 0.52 | 101 | 13,693 | 7.77 | 25 | 0 | 2 | 2 |
| Kirk Road- 10th Avenue to Lake Worth Road | 0.76 | 182 | 9,509 | 13.80 | 39 | 1 | 4 | 0 |
| Kirk Road- Lake Worth Road to Melaleuca Lane | 0.77 | 146 | 8,148 | 12.75 | 37 | 1 | 2 | 4 |
| Davis Road- Summit Blvd. to Alemeda Drive | 1.50 | 106 | 3,722 | 10.40 | 31 | 0 | 0 | 0 |
| Davis Road- Alemeda Drive to Melalueca Lane | 2.50 | 195 | 6,237 | 6.85 | 37 | 2 | 3 | 3 |
| Congress Avenue- Southern Blvd. to Forest Hill Blvd. | 1.80 | 567 | 32,749 | 5.27 | 128 | 2 | 7 | 3 |
| Congress Avenue- Forest Hill Blvd. to 10th Avenue | 1.54 | 739 | 42,695 | 6.16 | 121 | 2 | 4 | 9 |
| Congress Avenue- 10th Avenue to Lake Worth Road | 0.76 | 644 | 47,249 | 9.83 | 136 | 1 | 11 | 14 |
| Congress Avenue- Lake Worth Road to Melaleuca Road | 0.76 | 278 | 43,893 | 4.57 | 55 | 0 | 6 | 1 |
| Florida Mango Road- Summit Blvd. to Forest Hill Blvd. | 1.05 | 61 | 6,939 | 4.59 | 18 | 0 | 1 | 0 |
| Florida Mango Road- Forest Hill Blvd. to 10th Avenue | 1.56 | 159 | 11,521 | 4.85 | 33 | 2 | 3 | 4 |
| **East-West Roadway Corridors** | **Length (miles)** | **Number of Crashes (Overall)** | **Volume (AADT)** | **Crash Rate** | **Number of Crashes (Injury)** | **Number of Crashes (Fatal)** | **Number of Crashes (Pedestrian)** | **Number of Crashes (Bicycle)** |
| Gun Club Road- Military Trail to Kirk Road | 0.51 | 185 | 12,980 | 15.31 | 43 | 1 | 2 | 1 |
| Gun Club Road- Kirk Road to Congress Avenue | 1.00 | 105 | 14,326 | 4.02 | 24 | 0 | 2 | 1 |
| Summit Blvd.- Military Trail to Kirk Road | 0.50 | 318 | 22,939 | 15.19 | 76 | 1 | 3 | 2 |
| Summit Blvd.- Kirk Road to Davis Road | 0.53 | 79 | 21,792 | 3.75 | 26 | 1 | 0 | 1 |
| Summit Blvd.- Davis Road to Congress Avenue | 0.53 | 114 | 25,302 | 4.66 | 24 | 0 | 1 | 0 |
| Summit Blvd.- Congress Avenue to Florida Mango Rd | 0.51 | 161 | 13,869 | 12.47 | 49 | 0 | 2 | 1 |
| Forest Hill Blvd.- Military Trail to Congress Road | 1.50 | 918 | 42,481 | 7.89 | 180 | 3 | 9 | 11 |
| Forest Hill Blvd.- Congress Road to I-95 | 1.18 | 684 | 52,439 | 6.06 | 127 | 4 | 5 | 8 |
| Alemeda Drive- Military Trail to Congress Avenue | 1.51 | 281 | 3,719 | 27.42 | 60 | 1 | 4 | 2 |
| Greenbrier Dr- Military Trail to Congress Avenue | 1.53 | 126 | 6,131 | 7.36 | 22 | 0 | 2 | 0 |
| 10th Avenue- Military Trail to Kirk Road | 1.00 | 477 | 27,868 | 9.38 | 115 | 2 | 9 | 4 |
| 10th Avenue- Kirk Road to Congress Avenue | 0.50 | 195 | 32,836 | 6.51 | 38 | 2 | 1 | 5 |
| Lake Worth Road- Military Trail to Kirk Road | 1.00 | 727 | 44,159 | 9.02 | 146 | 5 | 13 | 13 |
| Lake Worth Road- Kirk Road to Congress Avenue | 0.50 | 255 | 41,240 | 6.78 | 50 | 2 | 5 | 5 |
| Lake Worth Road- Congress Avenue to I-95 | 1.25 | 514 | 27,471 | 8.20 | 117 | 0 | 8 | 7 |
| Melaleuca Lane- Military Trail to Kirk Road | 1.00 | 341 | 28,007 | 6.67 | 97 | 2 | 7 | 7 |
| Melaleuca Lane- Kirk Road to Congress Avenue | 0.60 | 139 | 30,957 | 4.10 | 44 | 2 | 4 | 1 |
| Melaleuca Lane- Congress Avenue to I-95 | 1.25 | 317 | 34,747 | 4.00 | 85 | 3 | 7 | 3 |

# Pedestrian Level of Stress

| Corridor | Limit From (centerline of cross street) | Limit To (centerline of cross street) | LTS (LRTP) | LTS (study) | Summary of Rating (based on modified method for study) |
|---|---|---|---|---|---|
| NORTH – SOUTH CORRIDORS | | | | | |
| Military Trail | Summit Boulevard | Forest Hill Boulevard | 4 | 3 | Tolerable only by most confident |
| | Forest Hill Boulevard | 10th Avenue North | 4 | 3 | Tolerable only by most confident |
| | 10th Avenue North | Lake Worth Road | 4 | 3.5 | Tolerable only by most confident |
| | Lake Worth Road | Melaleuca Lane | 4 | 3.5 | Tolerable only by most confident |
| Kirk Road | Southern Boulevard | Gun Club Road | 3.5 | 3 | Tolerable only by most confident |
| | Gun Club Road | Summit Boulevard | 3 | 2.5 | Tolerable by most adults, no childre |
| | Summit Boulevard | Forest Hill Boulevard | 2.5 | 3 | Tolerable only by most confident |
| | Forest Hill Boulevard | Purdy Ln./ Alemeda Dr. | 3.5 | 3 | Tolerable only by most confident |
| | Alemeda Drive | Park Ln./Greenbrier Dr. | 4 | 2.5 | Tolerable by most adults, no childre |
| | Park Ln./Greenbrier Dr. | 10th Avenue North | 3 | 2.5 | Tolerable by most adults, no childre |
| | 10th Avenue North | Lake Worth Road | 3 | 3 | Tolerable only by most confident |
| | Lake Worth Road | Melaleuca Lane | 3 | 3 | Tolerable only by most confident |
| Davis Road | Summit Boulevard | Forest Hill Boulevard | 2.5 | 3 | Tolerable only by most confident |
| | Purdy Ln./ Alemeda Dr. | 10th Avenue North | 2.5 | 2 | Tolerable by most adults, no childre |
| | 10th Avenue North | 2nd Avenue North | 3 | 2.5 | Tolerable by most adults, no childre |
| | 2nd Avenue North | Lake Worth Road | 4 | 3.5 | Tolerable only by most confident |
| | Lake Worth Road | Melaleuca Lane | 2.5 | 2 | Tolerable by most adults, no childre |
| Congress Avenue | Summit Boulevard | Forest Hill Boulevard | 4 | 3.5 | Tolerable only by most confident |
| | Forest Hill Boulevard | 10th Avenue North | 4 | 4 | Not tolerable for most able adults |
| | 10th Avenue North | Lake Worth Road | 4 | 4 | Not tolerable for most able adults |
| | Lake Worth Road | Melaleuca Rd./6th Av. S. | 4 | 3.5 | Tolerable only by most confident |
| Florida Mango Road | Summit Boulevard | Forest Hill Boulevard | 2.5 | 3 | Tolerable only by most confident |
| | Forest Hill Boulevard | 10th Avenue North | 3 | 3 | Tolerable only by most confident |

# Pedestrian Level of Stress

| Corridor | Limit From (centerline of cross street) | Limit To (centerline of cross street) | LTS (LRTP) | LTS (study) | Summary of Rating (based on modified method for study) |
|---|---|---|---|---|---|
| EAST – WEST ROADWAY CORRIDORS | | | | | |
| Gun Club Road | Military Trail | Kirk Road | 4 | 3.5 | Tolerable only by most confident |
| | Kirk Road | Congress Avenue | 4 | 3.5 | Tolerable only by most confident |
| Summit Boulevard | Military Trail | Kirk Road | 4 | 3.5 | Tolerable only by most confident |
| | Kirk Road | Davis Road | 4 | 2.5 | Tolerable by most adults, no childre |
| | Davis Road | Congress Avenue | 4 | 3 | Tolerable only by most confident |
| | Congress Avenue | Florida Mango Road | 4 | 3 | Tolerable only by most confident |
| Forest Hill Boulevard | Military Trail | Congress Avenue | 4 | 3.5 | Tolerable only by most confident |
| | Congress Avenue | I-95 | 4 | 3 | Tolerable only by most confident |
| Purdy Lane | Military Trail | Congress Avenue | 3 | 3.5 | Tolerable only by most confident |
| Park Ln./Greenbrier Dr. | Military Trail | Congress Avenue | 3 | 3.5 | Tolerable only by most confident |
| 10th Avenue North | Military Trail | Davis Road | 3 | 3 | Tolerable only by most confident |
| | Davis Road | Congress Avenue | 4 | 3.5 | Tolerable only by most confident |
| Lake Worth Road | Military Trail | Davis Road | 4 | 3.5 | Tolerable only by most confident |
| | Davis Road | Congress Avenue | 4 | 3.5 | Tolerable only by most confident |
| | Congress Avenue | 1-95 | 4 | 3.5 | Tolerable only by most confident |
| Melaleuca Lane | Military Trail | Davis Road | 4 | 3.5 | Tolerable only by most confident |
| | Davis Road | Congress Avenue | 4 | 3.5 | Tolerable only by most confident |
| | Congress Avenue | I-95 | 4 | 3.5 | Tolerable only by most confident |

# Bicycle Level of Stress

z

| Corridor | Limit From (centerline of cross street) | Limit To (centerline of cross street) | LTS (LRTP) | LTS (study) | Summary of Rating (based on modified method for study) |
|---|---|---|---|---|---|
| NORTH – SOUTH CORRIDORS | | | | | |
| Military Trail | Summit Boulevard | Forest Hill Boulevard | 4 | 4 | Not tolerable for most able adults |
| | Forest Hill Boulevard | 10th Avenue North | 4 | 4 | Not tolerable for most able adults |
| | 10th Avenue North | Lake Worth Road | 4 | 4 | Not tolerable for most able adults |
| | Lake Worth Road | Melaleuca Lane | 4 | 4 | Not tolerable for most able adults |
| Kirk Road | Southern Boulevard | Gun Club Road | 3.5 | 3.5 | Tolerable only by most confident |
| | Gun Club Road | Summit Boulevard | 2.5 | 2.5 | Tolerable by most adults, no children |
| | Summit Boulevard | Forest Hill Boulevard | 2.5 | 2.5 | Tolerable by most adults, no children |
| | Forest Hill Boulevard | Purdy Ln./ Alemeda Dr. | 3.5 | 3.5 | Tolerable only by most confident |
| | Alemeda Drive | Park Ln./Greenbrier Dr. | 2.5 | 2.5 | Tolerable by most adults, no children |
| | Park Ln./Greenbrier Dr. | 10th Avenue North | 2.5 | 2.5 | Tolerable by most adults, no children |
| | 10th Avenue North | Lake Worth Road | 2.5 | 2.5 | Tolerable by most adults, no children |
| | Lake Worth Road | Melaleuca Lane | 2.5 | 2.5 | Tolerable by most adults, no children |
| Davis Road | Summit Boulevard | Forest Hill Boulevard | 2.5 | 2.5 | Tolerable by most adults, no children |
| | Purdy Ln./ Alemeda Dr. | 10th Avenue North | 2.5 | 2.5 | Tolerable by most adults, no children |
| | 10th Avenue North | 2nd Avenue North | 2.5 | 2.5 | Tolerable by most adults, no children |
| | 2nd Avenue North | Lake Worth Road | 2.5 | 2.5 | Tolerable by most adults, no children |
| | Lake Worth Road | Melaleuca Lane | 2.5 | 2.5 | Tolerable by most adults, no children |
| Congress Avenue | Summit Boulevard | Forest Hill Boulevard | 4 | 4 | Not tolerable for most able adults |
| | Forest Hill Boulevard | 10th Avenue North | 4 | 4 | Not tolerable for most able adults |
| | 10th Avenue North | Lake Worth Road | 4 | 4 | Not tolerable for most able adults |
| | Lake Worth Road | Melaleuca Rd./6th Av. S. | 4 | 4 | Not tolerable for most able adults |
| Florida Mango Road | Summit Boulevard | Forest Hill Boulevard | 2.5 | 2.5 | Tolerable by most adults, no children |
| | Forest Hill Boulevard | 10th Avenue North | 2.5 | 2.5 | Tolerable by most adults, no children |

# Bicycle Level of Stress

| Corridor | Limit From (centerline of cross street) | Limit To (centerline of cross street) | LTS (LRTP) | LTS (study) | Summary of Rating (based on modified method for study) |
|---|---|---|---|---|---|
| EAST – WEST ROADWAY CORRIDORS | | | | | |
| Gun Club Road | Military Trail | Kirk Road | 4 | 4 | Not tolerable for most able adults |
| | Kirk Road | Congress Avenue | 4 | 4 | Not tolerable for most able adults |
| Summit Boulevard | Military Trail | Kirk Road | 4 | 4 | Not tolerable for most able adults |
| | Kirk Road | Davis Road | 4 | 4 | Not tolerable for most able adults |
| | Davis Road | Congress Avenue | 4 | 4 | Not tolerable for most able adults |
| | Congress Avenue | Florida Mango Road | 4 | 4 | Not tolerable for most able adults |
| Forest Hill Boulevard | Military Trail | Congress Avenue | 4 | 4 | Not tolerable for most able adults |
| | Congress Avenue | I-95 | 4 | 4 | Not tolerable for most able adults |
| Purdy Lane | Military Trail | Congress Avenue | 4 | 4 | Not tolerable for most able adults |
| Park Ln./Greenbrier | Military Trail | Congress Avenue | 4 | 4 | Not tolerable for most able adults |
| 10th Avenue North | Military Trail | Davis Road | 4 | 4 | Not tolerable for most able adults |
| | Davis Road | Congress Avenue | 4 | 4 | Not tolerable for most able adults |
| Lake Worth Road | Military Trail | Davis Road | 4 | 4 | Not tolerable for most able adults |
| | Davis Road | Congress Avenue | 4 | 4 | Not tolerable for most able adults |
| | Congress Avenue | 1-95 | 4 | 4 | Not tolerable for most able adults |
| Melaleuca Lane | Military Trail | Davis Road | 4 | 4 | Not tolerable for most able adults |
| | Davis Road | Congress Avenue | 4 | 4 | Not tolerable for most able adults |
| | Congress Avenue | I-95 | 4 | 4 | Not tolerable for most able adults |