AGENDA
VILLAGE COUNCIL MEETING
VILLAGE HALL COUNCIL CHAMBERS
226 CYPRESS LANE ■ PALM SPRINGS, FL 33461
JUNE 9, 2022
6:30 PM

COUNCIL

□ Mayor Bev Smith

□ Vice Mayor Doug Gunther

□ Mayor Pro Tem Joni Brinkman

□ Council Member Patti Waller

□ Council Member Gary Ready

ADMINISTRATION

□ Village Manager Michael Bornstein

□ Village Attorney Glen Torcivia

□ Village Clerk Kimberly Wynn

Persons who need an accommodation to attend or participate in this meeting should contact the office of the Village Clerk at (561) 584-8200 at least three (3) business days before the event to request such assistance.

CALL TO ORDER

ROLL CALL

INVOCATION

PLEDGE OF ALLEGIANCE

ADDITIONS, DELETIONS OR MODIFICATIONS, AND APPROVAL OF AGENDA

Motion	Second	Vote

CONSENT AGENDA

(Public Comment on Consent Agenda Items is permissible prior to voting)

1. Approval of May 12, 2022 Village Council Regular Meeting Minutes
   Staff: Kimberly Wynn, Village Clerk

2. Approve Change Order No. 1 and Change Order No. 2 - Vacuum Pump Station No. 1 Improvements (Task Order No. 240, 266, 278) - Utilities Department (FY 2022 Budget Funded - Water & Sewer Enterprise Fund) - Hinterland Group, Inc.
   Staff: Walter Sanchez, Project Manager

3. Approve Hurricane Debris Management and Support Services Agreement - Piggyback - Thompson Consulting Services, LLC
   Staff: James Schmitz, Director of Public Works

4. Approve Hurricane Debris Removal Agreement (Contract No. 22-201A) - Piggyback - Ashbritt Inc.
   Staff: James Schmitz, Director of Public Works

5. Approve Hurricane Debris Removal Agreement (Contract No. 22-201B) - Piggyback - Crowder Gulf Joint Venture, Inc.
   Staff: James Schmitz, Director of Public Works

6. Approve Hurricane Debris Removal Agreement (Contract No. 22-201C) - Piggyback - Phillips and Jordan, Inc.
   Staff: James Schmitz, Director of Public Works

7. Approve Hurricane Debris Removal Agreement (Contract No. 22-201D) - Piggyback - DRC Emergency Services, LLC
   Staff: James Schmitz, Director of Public Works

8. Approve Solar Chloride (Solar Salt) Purchase Agreement Renewal - Cooperative Purchasing (Piggyback) - Utilities Department (FY 2022 Budget Funded) Morton Salt, Inc.
   Staff: Paul Ward, Superintendent of Utilities

9. Approve Submersible Wastewater Pumps, Accessories, and Service Agreement - Invitation to Bid (ITB No. 2022B-010) - Utilities Department (FY 2022 Budget Funded - Water & Sewer Enterprise Fund) - Wastewater Solutions, LLC, Hudson Pump & Equipment, and PSI Technologies, Inc.
   Staff: Paul Ward, Superintendent of Utilities

10. Amendment of Grant Agreement with the Department of Economic Opportunity of the State of Florida, for $47,500.00 as part of the Community Planning Technical Assistance Program for Septic to Sewer Projects.
    Staff: Paul Ward, Superintendent of Utilities

11. Temporary Use Permit - Sales Center - Fontana Townhomes - 3674 San Bernardino Way (formerly 4090 Coconut Road & 4063 Davis Road)

Staff: Iramis Cabrera, PZB Director

12. Approve Property Improvement Program (PIP) Matching Grant Awards - 194 Springdale Circle, 633 Springdale Circle, 460 San Fernando Drive, and 731 Springdale Circle
Staff: Iramis Cabrera, PZB Director

End of Consent Agenda....

Motion	Second	Vote

PRESENTATIONS

13. National HIV Testing Day June 27, 2022 - Proclamation
Staff: Kimberly Wynn, Village Clerk

14. Florida League of Cities' 100th Anniversary - Proclamation
Staff: Kimberly Wynn, Village Clerk

15. Juneteenth - Proclamation
Staff: Kimberly Wynn, Village Clerk

PUBLIC COMMENT (Three minute limit)

REGULAR AGENDA

16. Resolution No. 2022-23 - Approval of Proposed Garbage Non-ad Valorem Rates for FY2023 - Effective October 1, 2022
Staff: Rebecca Morse, Chief Financial Officer

Motion	Second	Vote

PUBLIC HEARINGS

17. Ordinance No. 2022-02 - Land Use Amendment (Small-Scale) - Belmont - 1591 Kirk Road *(Second Reading) (Quasi-Judicial Hearing)*
Staff: Iramis Cabrera, PZB Director

Motion	Second	Vote

18. Resolution No. 2022-08: Residential Planned Development Site Plan (SPR22-05) and Two (2) Waivers - Belmont - 1591 Kirk Road *(Quasi-Judicial Hearing)*
    Staff: Iramis Cabrera, PZB Director

Motion	Second	Vote

19. Ordinance No. 2022-04 - Amendment to the General Employees Pension Plan *(First Reading)*
    Staff: Rebecca Morse, Chief Financial Officer

Motion	Second	Vote

20. Ordinance No. 2022-05 - Reapportionment of Council Districts (*First Reading*)
    Staff: Kimberly Glas-Castro, Assistant Village Manager

Motion	Second	Vote

21. Ordinance No. 2022-06 - Village Code Amendment - Chapter 2 - Lien Reductions (*First Reading*)
    Staff: Kimberly Glas-Castro, Assistant Village Manager

Motion	Second	Vote

22. Proposed Resolution No. 2022-20 - Site Development Plan (SPR22-09) and Special Exception Use (PSSE22-05) - Patel Dental Office - 1962 South Military Trail (*Quasi-Judicial Hearing*)
    Staff: Iramis Cabrera, PZB Director

Motion	Second	Vote

ACTIONS AND REPORTS

VILLAGE MANAGER COMMENTS

VILLAGE COUNCIL COMMENTS

ADJOURNMENT

NEXT MEETING

THURSDAY, JULY 7, 2022, AT 6:30 PM

If a person decides to appeal any decision made by the Council concerning any considered matter, they will need a record of the proceeding. For such purposes, they may need to ensure that a verbatim record of the proceedings is available. The recording includes the testimony and evidence upon which the appeal is to be based.

Village of Palm Springs

Title VI/Nondiscrimination Policy

I. Policy Statement:

The Village of Palm Springs values diversity and welcomes input from all interested parties, regardless of cultural identity, background, or income level. Moreover, the Village believes the best programs and services result from careful consideration of the needs of all its communities and when those communities are involved in the decision-making process. The Village does not tolerate discrimination in any of its programs, services, or activities. Pursuant to Title VI of the Civil Rights Act of 1964 and other federal and state authorities, the Village will not exclude from participation in, deny the benefits of, or subject to discrimination anyone on the grounds of race, color, national origin, sex, age, disability, religion, or family status.

II. Persons with Disabilities:

Section 504 of the Rehabilitation Act of 1973, the Americans with Disabilities Act of 1990 (ADA) and related federal and state laws and regulations forbid discrimination against those who have disabilities. These laws require federal-aid recipients and other government entities to take affirmative steps to reasonably accommodate those with disabilities and ensure that their needs are equitably represented.

The Village will make every effort to ensure that its facilities, programs, services, and activities are accessible to those with disabilities. The Village will also make every effort to ensure that its advisory committees, public involvement activities and all other programs, services and activities include representation by communities with disabilities and disability service groups.

The Village encourages the public to report any facility, program, service, or activity that appears inaccessible to those who are disabled. Also, the Village will provide reasonable accommodation to individuals with disabilities who wish to participate in public involvement events or who require special assistance to access facilities, programs, services, or activities. Because providing reasonable accommodation may require outside assistance, the Village asks that requests be made at least three (3) business days prior to the need for accommodation. Questions, concerns, comments, or requests for accommodation should be made to the Village ADA Officer:

Name: Ashley Saingilus
Address: 226 Cypress Lane, Palm Springs, FL 33461
Email: asaingilus@vpsfl.org
Phone: (561)584-8200 Ext. 8419

III. Complaint Procedures:

The Village has established a discrimination complaint procedure and will take prompt and reasonable action to investigate and eliminate discrimination when found. Any person who believes that he or she has been subjected to discrimination based upon race, color, national origin, sex, religion, age, disability or family status in any Village program, service or activity may file a complaint with the Village Title VI/Nondiscrimination Coordinator:

Name: Janette Piedra, Human Resources Manager
Address: 226 Cypress Lane, Palm Springs, FL 33461
Email: jpiedra@vpsfl.org
Phone: (561)584-8200 Ext. 8421

VILLAGE COUNCIL MEETING MINUTES,

COUNCIL CHAMBERS 226 CYPRESS LANE

VILLAGE OF PALM SPRINGS, FLORIDA

MAY 12, 2022, AT 6:30 PM

CALL TO ORDER

Mayor Smith called the Village Council Regular Meeting to order at 6:30 pm.

ROLL CALL

Also present at the meeting were Kim Glas-Castro, Assistant Village Manager, Paul Ward, Interim Public Works Administrator, Justin Lucas, Director of Parks and Recreation, Claudia Ruiz, Library Administrative Assistant, Iramis Cabrera, Director of Planning, Zoning & Building, Rogelio Perez, Planner, Frank Castro, Police Officer, and Garrett Pearson, Recreation Specialist II.

INVOCATION

Village Manager Bornstein led in the invocation.

PLEDGE OF ALLEGIANCE

The Village Council led in the Pledge of Allegiance.

ADDITIONS, DELETIONS OR MODIFICATIONS, AND APPROVAL OF AGENDA

There were no Additions, Deletions, or Modifications to the Agenda.

Council Member Waller made a motion to approve the Agenda as presented. It was seconded by Council Member Ready. The motion carried 5-0.

CONSENT AGENDA

Mayor Smith opened the floor for public comment; there was none.

1. **Approval of March 10, 2022, Local Planning Agency Meeting Minutes**

   Staff: Kimberly Wynn, Village Clerk

2. **Appointments to the Parks and Recreation Board**

   Staff: Jane Worth, Deputy Village Clerk

   Summary: There are four (4) upcoming Regular member vacancies and two (2) Alternate member vacancies on the Parks and Recreation Board due to the expiration of Mr. Alberto Jordat, Ms. Cheryl Cowser, Ms. Doriana Kristenson, and Mr. Rick DiRenzo's term.

   Mr. Alberto Jordat, Ms. Cheryl Cowser, Ms. Doriana Kristenson, and Mr. Rick DiRenzo have each expressed an interest in continuing to serve as Regular Board members, and they have all been valuable assets to this Board. If appointed, they would serve a three (3) year term ending on May 14, 2025.

   Mr. Shannon Sagan submitted his resignation on February 19, 2021, creating a vacancy on the Parks and Recreation Board. Mrs. Ashley Saingilus, the Senior Alternate, has expressed an interest in being appointed as a Regular member. Mrs. Saingilus would serve an unexpired term ending on May 14, 2024.

   If the appointments are approved, there would be one (1) Senior Alternate, and one (1) Junior Alternate vacancy on the Parks and Recreation Board.

   Fiscal Impact:

   There is no fiscal impact on the Village.

3. **Approve Property Improvement Program (PIP) Matching Grant Awards - 232 Tam O' Shanter Drive, 651 Springdale Circle, 652 Springdale Circle, and 644 Springdale Circle**

   Staff: Iramis Cabrera, PZB Director

Summary: The Village's Property Improvement Program (PIP) Committee is recommending approval of grant awards for four (4) property owners who have completed an improvement project to their property and filed the necessary documentation to receive matching grant funding under this program:

- Owner/Resident: Lori B. Hill
- Address: 232 Tam O Shanter Drive
- Project: Replace the concrete driveway
- Eligible (Project) Cost(s): $7,350.00
- Matching Grant Award: $3,675.00

- Owner/Resident: Rafael A. Matos
- Address: 651 Springdale Circle
- Project: Replaced mansard roof with Davinci Bellaforte and flat roof
- Eligible (Project) Cost(s): $16,500.00
- Matching Grant Award: $5,000.00

- Owner/Resident: Joseph C. Smith
- Address: 652 Springdale Circle
- Project: Replaced mansard roof with Davinci Bellaforte
- Eligible (Project) Cost(s): $8,550.00
- Matching Grant Award: $4,275.00

- Owner/Resident: Bernard J. LeBarre
- Address: 644 Springdale Circle
- Project: Replaced mansard roof with Davinci Bellaforte
- Eligible (Project) Cost(s): $8,550.00
- Matching Grant Award: $4,275.00

The PIP Selection Committee met on October 29, 2021, and recommended approval of the grant awards (up to 50% of $5,000). If approved by the Village Council, the

awardees will be mailed their checks and may be acknowledged at a future Village Council meeting.

Fiscal Impact:

Funding to support the proposed awards is available within the FY22 Budget - General Fund.

4. **Approve Change Order No. 4 (Task Order No. 255) - Park Connector Pathway Canal Road Sub-Phase Engineering - Parks and Recreation Department (FY 2022 Budget Funded - General Fund) - Wantman Group, Inc.**

Staff: Justin Lucas, Director of Parks & Recreation

Summary: On April 14, 2022, Village Council approved an amendment to the Village's FY 2022 Community Development Block Grant (CDBG) project. This amendment allows the Village to begin the construction sub-phase of a pathway on the north side of Canal Road on a Lake Worth Drainage District easement. With this amendment, Parks and Recreation Department staff requests approval of a proposed change order work authorization for Wantman Group, Inc. to provide engineering services to allow the Village to complete this section of the pathway park. Tasks include a Topography Survey; optional Cross Sections Survey (if required by the Lake Worth Drainage District); optional administrative, revisions, and comment services representing the Village (if services are required by Lake Worth Drainage District); engineering design service; optional service providing engineering plans sections and typical sections (if required by Lake Worth Drainage District); representation at meetings with the Village and Lake Worth Drainage District; permitting services; bid assistance; and construction administration services.

Per all Village and CDBG requirements, the project will be competitively bid. Staff will present the proposed contract award to Council for approval once permitting is completed with the Village and the Lake Worth Drainage District.

The Village's contracted engineer, Wantman Group (WGI), and the Parks and Recreation Department recommend amending the Task Order No. 255 (Change Order

No. 4) to an amount not-to-exceed $40,350 to include additional permitting assistance, bidding, and construction services to better assist in completing the project in a timely and cost-efficient manner.

The proposed Change Order No. 4 was prepared by Wantman Group and reviewed by the Parks and Recreation Director, Public Works Director, and Finance Director Canal Road on a Lake Worth Drainage District easement. With this amendment, Parks and Recreation Department staff requests approval of a proposed change order work authorization for Wantman Group, Inc. to provide engineering services to allow the Village to complete this section of the pathway park. The tasks include a Topography Survey. If required by Lake Worth Drainage District, optional service for a Cross Sections Survey, administrative, revisions, and comment services representing the Village; engineering design service; optional service providing engineering plans sections and typical sections (if required by Lake Worth Drainage District); representation at meetings with the Village and Lake Worth Drainage District; permitting services; bid assistance; and construction administration services.

Per all Village and CDBG requirements, the project will be competitively bid. Once permitting is complete with LWDD and the Village, staff will present a contract award to Council for approval.

Wantman Group, the Village's contracted engineer, and the Parks and Recreation Department recommend amending the Task Order No. 255 (Change Order No. 4) for an amount not-to-exceed $40,350 that includes additional permitting assistance, bidding, and construction services to better assist in completing the project in a timely and cost-efficient manner.

The proposed Change Order No. 4 was prepared by Wantman Group and reviewed by the Parks and Recreation Director, Public Works Director, and Finance Director.

Fiscal Impact:

Funding to support the additional engineering services (Change Order No. 4) within Task Order No. 255 is available within the FY 2022 Budget - General Fund utilizing Infrastructure Surtax (Sales Tax) funds. The proposed work authorization will include the tasks and fees for services (See the Fiscal Information Chart).

5. **Approve 2017 Lift Station Rehabilitation (Change Order No. 2 & Closeout) (Task Order No. 218) - Utilities Department (FY 2022 Budget Funded - Water & Sewer Enterprise Fund) - Foster Marine Contractors, Inc.**

Staff: Paul Ward, Superintendent of Utilities

Summary: On March 15, 2019, the Council approved Task Order No. 218 with Foster Marine Contractors, Inc. for the 2017 Lift Station Rehabilitation project for the amount of $1,050,427.00. Three (3) lift stations were identified by staff for rehabilitation (PS-02 Woodlands, PS-06 Fountainview, and PS-08 Mediterranean). The project involved the rehabilitation of the lift station's wet wells, replacement of electrical panels, and installation of new pumps and piping at all three (3) lift stations.

The work started on the project on February 1, 2021, after the approval of Change Order No. 1 was approved by Council on November 12, 2020, and was substantially completed and inspected on December 13, 2021, 136 days behind schedule. There were no punch items identified and the project was declared finished the same day.

The awarded contract provided $8,000.00 Miscellaneous Work Allowances for PS-06 Fountainview and PS-08 Mediterranean lift stations and $11,000.00 for PS-02 Woodlands Lift Station. At PS-08 Mediterranean lift station, $7,750.00 was utilized to move the control panel to allow for adequate clearance of the wet well. No Miscellaneous Work Allowances were utilized at the remaining two (2) lift stations.

The Village's contracted engineer, Engenuity Group, and the Utilities Department are recommending approval for a final reconciliation change order (Change Order No. 2) for

$19,250.00 and a 136-day time extension.

The final reconciliation (closeout) for the 2017 Lift Station Rehabilitation contract to Foster Marine Contractors, Inc. is as follows:

Work to be Completed	**Contract Amount**	**Contract Time**
Original Contract Amount	$1,050,427.00	210 Days
Change Order No. 1	-$63,320.00	210 Days
Change Order No. 2	-$19,250.00	+ 136 Days
Final Revised Contract Amount	$967,857.00	346 Days

If approved, the revised total cost of the 2017 Lift Station Rehabilitation project within Task Order #218 will be $967,857.00 and the total contract time will be 346 days. No additional change orders are anticipated for this project. Construction work is complete and, if approved, the contract will be closed.

Project Funding:	***Amount***
FY 2017 Actual Budget - Water & Sewer Enterprise Fund:	$ 36,658.00
FY 2018 Actual Budget - Water & Sewer Enterprise Fund:	$ 52,276.75
FY 2019 Actual Budget - Water & Sewer Enterprise Fund:	$ 5,336.75
FY 2020 Actual Budget - Water & Sewer Enterprise Fund:	$ 2,340.00
FY 2021 Actual Budget - Water & Sewer Enterprise Fund:	$ 917,235.65
FY 2022 Actual Budget - Water & Sewer Enterprise Fund:	$ 66,734.35
Total Allocated/Approved Budget:	$1,080,581.50

The proposed reconciliation Change Order No. 2 was prepared by Foster Marine Contractor, Inc. and reviewed by the Village's Contracted Engineer, Assistant Village Manager, Public Service Administrator, and the Finance Director.

Fiscal Impact:

Funding to support the 2017 Lift Station Rehabilitation Project (Task Order No. 218)

Expected Project Costs:	***Amount***
Original Project Award - Design & Engineering - Water & Sewer Fund (T.O. No. 218):	$ 124,745.00
Original Project Award - Construction - Water & Sewer Fund (T.O. No. 218):	$1,050,427.00
Change Order No. 1 - Construction - Water & Sewer Fund (T.O. No. 218):	- $ 63,320.00
Total Revised Project Costs:	**$1,111,852.00**

was provided by the Water & Sewer Enterprise Fund

The Village will not expend more than the amount in the approved budget as it may be adopted/amended each year for these goods and services for the term of the contract.

6. **Approval to Award the Joseph L. Fallon Scholarship Awards - Five (5) Scholarship Awards**

Staff: Kimberly Wynn, Village Clerk

Summary: Each year, the Village of Palm Springs awards scholarships to selected high school seniors who live within the Village. In 1996, the annual Village scholarship was named in memoriam for Palm Springs resident and library volunteer Joseph Fallon, who passed suddenly during his senior year at John I. Leonard High School.

This year, the Village Council is expected to present five (5) Joseph L. Fallon Scholarship awards to applicants based on financial need, grades, experience, and personal appraisal. The recommended 2022 Fallon Scholarship winners include:

- **Stephanie Bruzon:** Stephanie is a student at G-Star School of the Arts and plans to attend the Savannah College of Art and Design (SCAD) in Savannah, Georgia. Her major is Theatre.

- **Connor A. Rieth:** Connor is a student at Suncoast High School and plans to attend the University of Central Florida in Orlando, Florida. His major is Mechanical Engineering.
- **Clara Alfonso:** Clara is a student at G-Star School of the Arts and plans to attend Palm Beach State College in Florida. Her major is Information Graphic Design.
- **Gabrielle T. Kelly:** Gabrielle is a student at John I. Leonard High School and plans to attend the University of Miami in Coral Gables, Florida. Her major is Child Psychology.
- **Leonardo Estrada:** Leonardo is a student at G-Star School of the Arts and plans to attend Valencia College in Orlando, FL. His major is Graphic and Interactive Design.

The Fallon Scholarship Committee met on April 18th, 2022 and recommended the approval of five (5) scholarship awards to local high school students to assist with their plans to attend college.

The Village Council is expected to approve this recommendation on May 12th, 2022, and if approved, will present each scholarship recipient with a check during the May 12th, 2022, Village Council Meeting.

Fiscal Impact:

Funding to support the proposed awards is available within the FY 2022 Budget - General Fund

End of Consent Agenda....

Mayor Pro Tem Brinkman made a motion to approve the Consent Agenda as presented, seconded by Vice Mayor Gunther. The motion carried 5-0.

PRESENTATIONS

7. **Legislative Update - Representative David Silvers**

Representative Silvers did not show up to present the Legislative Updates.

8. **Building Safety Month Proclamation - May 2022**

Mayor Smith read the proclamation on the record and presented it to Ms. Cabrera.

9. **Police Week and Peace Officers Memorial Day Proclamation - May 11 - 17, 2022**

   Mayor Smith read the proclamation on the record and presented it to Police Chief Ceccarelli and Officer Frank Castro.

10. **Presentation - Award the Joseph L. Fallon Scholarship to Five (5) Student Recipients**

   Summary: The Fallon Scholarship Committee met on April 18th, 2022, and recommended the approval of five (5) scholarship awards to local high school students to assist with their plans to attend college. Each scholarship recipient will receive a $1,000 check.

   This year, the Village Council is expected to present five (5) Joseph L. Fallon Scholarship awards to applicants based on financial need, grades, experience, and personal appraisal. The recommended 2022 Fallon Scholarship winners include:

   - **Stephanie Bruzon:** Stephanie is a student at G-Star School of the Arts and plans to attend the Savannah College of Art and Design (SCAD) in Savannah, Georgia. Her major is Theatre.
   - **Connor A. Rieth:** Connor is a student at Suncoast High School and plans to attend the University of Central Florida in Orlando, Florida. His major is Mechanical Engineering.
   - **Clara Alfonso:** Clara is a student at G-Star School of the Arts and plans to attend Palm Beach State College in Florida. Her major is Information Graphic Design.
   - **Gabrielle T. Kelly:** Gabrielle is a student at John I. Leonard High School and plans to attend the University of Miami in Coral Gables, Florida. Her major is Child Psychology.
   - **Leonardo Estrada:** Leonardo is a student at G-Star School of the Arts and plans to attend Valencia College in Orlando, FL. His major is Graphic and Interactive Design.

Mayor Smith introduced Ms. Ruiz who gave a brief history of the Fallon Scholarship. She said that this is the 26th year that this scholarship was presented to local high school students. She introduced Mr. James and Caroline Fallon, who spoke further about the meaning behind the scholarship. Then the Mayor presented five (5) high school seniors that were college-bound, with their $1000 scholarship checks and took pictures.

Fiscal Impact: Funding to support the proposed awards is available within the FY 2022 Budget - General Fund

PUBLIC COMMENT

Mayor Smith offered the public an opportunity to speak:

1. Johnnie Techie 301 Winged Foot Drive: Mr. Tieche commented on the new electronic speed signs. He said it helped to curtail speeding in the area. He mentioned the trees that were getting trimmed in the Village and was excited about the new landscaping company starting. Police Chief Ceccarelli commented on the new "smart electronic speed signs". He said the devices were beneficial for tracking data. At this time there are two (2), but he anticipates the purchase of two (2) more next fiscal year.

Mayor Smith closed public comment.

PUBLIC HEARINGS

11. **Ordinance No. 2022-02 - Land Use Amendment (Small-Scale) - Belmont - 1591 Kirk Road *(First Reading) (Quasi-Judicial Hearing) (Postponed/Continued from March 10, 2022, Meeting)***

Staff: Iramis Cabrera, PZB Director

Summary: Mr. Jerrod Purser, agent for D.R. Horton, Inc. ("Applicant"), is requesting a small-scale land-use plan amendment on a 5.07-acre property to facilitate a multi-family

(townhome) development project.

The proposed small-scale land-use change would be from the existing Palm Springs designation to the new Palm Springs designation. The property is less than 50 acres in size (5.07 acres) and is planned for urban (residential) use:

Existing Village Future Land Use	Proposed Village Future Land Use
Other Public Facilities	Medium Density Residential (up to 10 du/ac)

The applicant is requesting that the property be designated with the Village's Medium-Density Residential future land use category (10 du/ac), which would allow up to a maximum intensity of 50 residential dwelling units. The property was annexed into the Village of Palm Springs in 2006 and assigned Village Residential Multiple-Family and Other Public Facilities zoning and future land use designations, respectively.

Note: The subject property is bound to the west and the north by Palm Beach County residential land use.

The applicant is concurrently requesting a site plan approval (SPR22-03) and two (2) waivers for residential planned development (RPD) to construct 42 two-story fee-simple townhomes within nine
(9) buildings. The proposed community would have access via Kirk Road, and amenities are expected to include playground equipment, picnic tables under a shade structure, and a trail path.

The applicant is requesting two (2) waivers for the proposed RPD site plan:

1. Relief from Sec. 34-1328 to allow a 20' wide drive aisle rather than the 26' wide required

2. Relief from Sec. 34-766(1) to allow the construction of 42 residential dwelling units within 5.07 acres rather than 8.84 acres.

The proposed site plan with waivers is presented (within this item) for informational purposes only (no action is required at this time). If the proposed small-scale map amendment is approved on the 2nd and final reading, the proposed site plan will be considered by the Village Council under a separate Resolution during the June 9th meeting.

The staff has identified the focal area of concern related to the project with the present traffic conditions at the northern section of the Kirk Road and Forest Hill Boulevard intersection, primarily because of peak traffic caused by the adjacent middle school. The main issue is the increased vehicular and pedestrian traffic during peak morning and afternoon school traffic. Palm Springs Middle School has an enrollment of 1,636 students, and the school session is from 9:30 a.m. to 4:05 p.m. The peak traffic times for this area range from 8:00 a.m. - 9:00 a.m. and 3:00 p.m. - 4:30 p.m. Kirk Road has hundreds of cars stacked for student drop off and pick up during these times. Hundreds of students cross the adjacent roads at the beginning of school and during dismissal. Officers estimate about 400 students exit the school. Many of them cross the street using the northern crosswalk to go to Dollar General, Cumberland Farms, and Woodhaven Plaza. During peak dismissal, the school staff stops vehicular traffic at the north crosswalk crossing for up to seven minutes and crossing guards at the corner of Kirk and Forest Hill stop vehicular traffic for multiple twenty-second intervals. In addition, Palm Beach County added a second pedestrian crossing on Kirk Road north of the main intersection on Kirk and Forest Hill to alleviate crowding at the corner crossings. The end of the new crosswalk is too close to the driveway to access Dollar General. As a result, students crossing the street walk directly into traffic that turn left into Kirk since the lack of distance does not allow stacking. We believe the county could have averted this issue if the crosswalk were offset by a few feet further north away from the driveway access.

Note: The Village does not typically place conditions of approval on future land use map changes. The legislative decision as to the appropriateness of the land use, irrespective of potential development plans, is generally made with consideration to compatibility, impact on services, and need for the land use to fulfill village redevelopment and growth objectives.

The proposed request was submitted through the PBC Intergovernmental Plan Amendment Review Committee (IPARC) for intergovernmental review and no comments were received.

Note: IPARC is designated to provide coordination of proposed plan amendments, cooperation between affected local governments and service providers and provides opportunities to resolve potential disputes only within the plan amendment process.

The Planning & Zoning Board considered the requested land use plan amendment during their February 8, 2021, meeting and recommended denial. Board members expressed concerns regarding the number of units suggested, the density, and the amount of traffic generated from the new development.

The Local Planning Agency (LPA) considered this item during their March 10, 2022, meeting and recommended denial.

On March 10, 2022, the project was presented to the Village Council, but concerns were expressed about the density proposed the number of units and compatibility with the surrounding residential area. The applicant requested it to be postponed until the May 12th, 2022, Council meeting, to revise the site plan and alleviate the concerns expressed by council members.

The applicant has revised the project to propose a maximum intensity of 8.28 residential dwelling units per acre and reduced the number of units from 50 to 42 dwelling units.

If approved on 1st reading, the proposed ordinance will be considered for 2nd and final reading by the Village Council on June 9, 2022.

The Village Clerk read the statement of advertisement into the record. Mayor Smith asked the Council to disclose if there was an ex parte communication - there was none. The Village Clerk swore in the staff and the applicants: Jerrod Pursar, Project Manager at WGI, and Dwayne Dickerson, Partner at Dunay Miskel and Backman, LLP. The staff gave a short PowerPoint presentation on the Belmont project. Mr. Pursar discussed changes to the land to make it for residential use. Mr. Dickerson explained that his firm is receptive to working with the Palm Beach County School Board District. Mayor Smith read a letter received from the School Board in the record. She said Palm Springs Middle School wants to have a traffic light added because there are a lot of children in the area, and a traffic light may control cars as children cross the street. Officer Castro agreed there were a lot of children and the area needed a traffic light. Mr. Dickerson said he was optimistic that they could work with staff and the County to make this project happen.

There was further discussion about the type of light and the ideal location.

Mayor Smith offered the public an opportunity to speak. There were no comments from the public.

Village Attorney Torcivia read the title of the caption on the record.

Council Member Ready made a motion to approve Ordinance No. 2022-02 on First Reading. It was seconded by Mayor Pro Tem Brinkman. The motion carried 5-0.

Fiscal Impact:

The property land use amendment is not expected to provide a direct fiscal impact on the Village; however, it would facilitate development that will increase the Village's property evaluation. In addition, this project would require various Village services that

will result in increased expenditures on the Village.

12. **Resolution No. 2022-19 - Site Plan Amendment - Burger King - 1760 South Military Trail (*Quasi-Judicial Hearing*)**

Staff: Iramis Cabrera, PZB Director

Summary: Mr. Josh Nichols of Schmidt Nichols Landscape Architecture and Urban Planning, agent for the owner, J Wells Hoffman LCC, is requesting a Site Plan Amendment (SPR22-08) for the Commercial General property located at 1760 South Military Trail. The applicant proposes to reconfigure the landscape buffer along the front (western) portion of the property due to right-of-way condemnation by the Florida Department of Transportation (FDOT).

FDOT proposes to make intersection improvements to State Road 809 (South Military Trail) and State Road 882 (Forest Hill Boulevard), which necessitates widening both roadways with the approach and departure from the intersection. The widening project resulted in the FDOT taking 461 square feet along the entire length of the property's western frontage. The taking will impact the property, causing a loss of width in the planting area adjacent to the right-of-way.

Currently, the 1.6-acre property is being developed with a 2,991 square-foot restaurant building, seventy-nine (79) parking spaces, and a drive-thru facility, and there are no plans to modify these improvements.

The applicant proposes reducing the width of the landscape buffer as a remedial action for the loss of the property and to minimize the negative impact. The proposed plan will re-accommodate the right-of-way landscape buffer.

The Planning & Zoning Board approved during their regular meeting on April 12, 2022, one variance requested (PSV22-04) from the Village Code (relief from Sec.34-162(b)(5)), to allow a landscape buffer along the west side adjacent to the South Military Trail, minimum width of 13' rather than 15' minimum required.

The Planning, Zoning & Building Staff does not object to the applicant's request and recommends conditional approval to facilitate the reconfiguration of the landscape buffer as a result of the state condemnation.

Mayor Smith asked the Council to disclose their ex parte communication; there was none. The Village Clerk gave the state of advertisement and swore in the Applicant, Josh Nichols. The staff gave a PowerPoint presentation on Resolution No. 2022-19. Mayor Smith allowed Mr. Nichols to present. He stated he did not have a presentation; however, he was available for questions.

Mayor Smith allowed the public and council to ask questions and speak. There were no comments. Village Attorney Torcivia read the title of the caption into the record.
Council Member Gunther made a motion to approve Resolution No. 2022-19. It was seconded by Council Member Brinkman. The motion carried 5-0.

Fiscal Impact:

The proposed modification to the project is not expected to have a fiscal impact on the Village.

ACTIONS AND REPORTS

There were no Actions and Reports.

VILLAGE MANAGER COMMENTS

Village Manager Bornstein discussed the Infrastructure Surtax Citizens' Oversight Committee. He talked about the difficulty in getting residents to sign up on the board and asked for authorization to have the Palm Beach County League of Cities serve as the Village's Oversight Committee. The Council gave the Village Manager, Mr. Bornstein, authorization to do whatever legislation was necessary to proceed and to send a letter to the Palm Beach County League of Cities to have them oversee the board. The Village Manager then asked Mr. Lucas to talk about a partnership with I-9 Sports.

Mr. Lucas discussed I9 Sports and how the partnership could benefit the Village. He explained that I9 Sports could offer multiple sports clinics at the same time, which was difficult to do with current staffing challenges. Using I9 provides staff with more opportunities to focus on other things like camps and other programs. The program is generally for ages 3-9. Future options may be explored depending on the outcome of this partnership. Mr. Lucas discussed some of the other programs that may be introduced or reintroduced.

VILLAGE COUNCIL COMMENTS

The Village Council gave their comments on events they attended. Council Member Waller discussed the excessive parking around the village and asked if residents could get educated on the proper way to park. The hedges around the HVAC system at the Library need to be taken care of. She also asked about a Jacaranda tree for the next Arbor Day.

The Council congratulated the graduates and said that Chief Ceccarelli and Council Member Ready would attend the P.A.C.E. graduation ceremony. Mayor Pro Tem Brinkman is attending Palm Beach Preparatory Academy graduation, and Mayor Smith is attending the G-Star graduation.

ADJOURNMENT

Hearing no further business, the meeting was adjourned at 7:38 pm.

ATTEST:

_____

Bev Smith, Mayor

The undersigned is the Village Clerk of Palm Springs, Florida, and the information provided herein is the Minutes of the Regular Council Meeting held on **May 12, 2022**. Which minutes were formally approved and adopted by the Village Council on **June 9, 2022.**

Kimberly M. Wynn, Village Clerk

_____

NEXT REGULAR MEETING:

THURSDAY, JUNE 9, 2022, AT 6:30 PM

If a person decides to appeal any decision made by this Council with respect to any matter considered at this meeting, he will need a record of the proceeding. For such purpose, he may need to ensure that a verbatim record of the proceedings is made, which record includes the testimony and evidence upon which the appeal is to be based. Persons who need an accommodation in order to attend or participate in this meeting should contact the Village Clerk at (561) 584-3200 at least 3 business days before the meeting to request such assistance.

Village of Palm Springs

Executive Brief

AGENDA DATE: June 9, 2022

DEPARTMENT: Utilities

ITEM #2: Approve Change Order No. 1 and Change Order No. 2 - Vacuum Pump Station No. 1 Improvements Project (Task Order No. 240, Task Order No. 266, and Task Order No. 278) - Utilities Department (FY 2022 Budget Funded - Water & Sewer Enterprise Fund) - Hinterland Group, Inc.

SUMMARY: On July 8, 2021, the Village Council approved Task Order (Task Order No. 240, Task Order No. 266, and Task Order No. 278) with Hinterland Group, Inc. for construction services for the Vacuum Pump Station No. 1 Improvements Project for $472,600.00. During the submittal phase of construction, the Contractor submitted a generator (Generac) as an alternate equal to the specified generator. The engineer of record, Eckler Engineering, determined the generator did not meet all the specifications after their review. The Contractor could not obtain a quote from Caterpillar, the specified generator brand; therefore, their bid price included a quote from Generac. After consulting with Eckler Engineering, the Village decided that in the interest of the Village, it was best to take credit from Hinterland for the generator included in the bid, plus all associated labor and materials costs (Change Order No.1). The Contractor will continue to provide all the other associated items like the concrete slab and the automatic transfer switch so that a permanent generator can be installed later.

The pump station will still operate as intended without the emergency generator and will still have a portable generator connection in case of power loss.

The Contractor experienced delays with getting a permit from Palm Beach County Building Department that impacted their actual start time. There was also a delay with the auto shop owner where the vacuum station is currently located when getting him to sign and execute the easement agreement for the vac station where the generator pad would get installed. In addition, the manufacturer of one of the electrical components has indicated that there is a long lead time to receive an electrical panel that should arrive towards the end of the calendar year. Change Order No. 2 is requested to provide the Contractor with an extension of 290 additional days (530 days total).

Eckler Engineering and the Public Service Department recommend the approval of Change Order No. 1 (Task Order No. 266), for a credit of $51,549.95 for the value of the bid generator (Generac), and Change Order No. 2 (Task Order No. 240, Task Order No. 266, and Task Order No. 278), to extend the project contract time an additional 290 calendar days (total contract time from 240 days to 530 days):

Work to be Completed	Contract Amount	Contract Time
Original Contract Amount	$472,600.00	240 days

Vacuum Pump Station No 1 Improvements CO #1	-$51,549.95	0 days
Vacuum Pump Station No 1 Improvements CO #2	$0.00	290 days
Revised Contract Amount	**$421,050.05**	**530 days**

The total cost of the Vacuum Pump Station No. 1 Improvements project within Task Order No. 240, Task Order No. 266, and Task Order No. 278 will decrease to $421,050.05, and the contract time will increase to 530 days total.

The Vacuum Pump Station No. 1 Improvements project is estimated to be completed by February 2023.

Change Orders No. 1 and No. 2 were prepared by Hinterland Group and reviewed by the Village's Engineer, Eckler Engineering, Engineer of record, the Interim Public Service Director, the Public Service Administrator, the Public Service Project Manager, and the Finance Director.

FISCAL IMPACT:

Funding to support the Vacuum Pump Station No. 1 Improvements Project (Task Order No. 240, Task Order No. 266, and Task Order No. 278) was provided by the Water & Sewer Enterprise Fund.

The Village will not expend more than the amount in the approved budget as it may be adopted/approved each year for these goods and services for the term of the contract.

An internal budget transfer or amendment to support this proposed cost above the budgeted amount will be completed within the Water & Sewer Enterprise Fund at a later date, if necessary.

ATTACHMENTS:

1. Proposed Change Order No. 1 – Hinterland Group
2. Proposed Change Order No. 2 – Hinterland Group
3. Fiscal Impact
4. Executed Agreement - Hinterland Group.

ECKLER ENGINEERING, INC.

May 4, 2022 (Sent via email to wsanchez@vpsfl.org)
400-089.03

Mr. Walt Sanchez
226 Cypress Lane
Palm Springs, Florida 33461

Dear Mr. Sanchez:

Reference: Change Order Request No. 3
Vacuum Pump Station No. 1 Improvements
Task Order Number: 266

Attached is Change Order Request Number 3 for the above referenced project. Change Order Request Number 3 decreases the contract amount for the project. This change results from the Village of Palm Springs direct purchase of the generator. Hinterland Group is still responsible for the ancillary work associated with the generator installation including, but not limited to, the generator slab, grounding, conduits, ATS, and wire.

Please review the enclosed documents and if everything meets with your approval, have the appropriate Village personnel sign where indicated by Owner on page 1 of 1 of the attached Change Order document. Once you have completed your review and these documents have been signed, return a scanned copy to our office. We will forward the documents to Hinterland Group, Inc. for their files.

If you have any questions or require additional information pertaining to this project, please do not hesitate to contact me.

Sincerely,

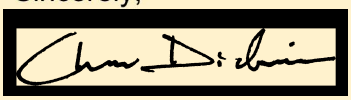

Chase Dickinson, P.E.

Encl.

Y:\Documents\Village\400-089.03 Vacuum Pump Station No.1 Improvements - SDC\Change Orders\Change Order No. 3 - Generator Removal\To Village\Change Order Request No. 3 Cover Letter.docx

4700 RIVERSIDE DRIVE, SUITE 110
CORAL SPRINGS, FL 330367
954/510-4700
FAX 954/755-2741

Change Order No. 1

Date of Issuance: April 21, 2022 | Effective Date:

Owner: Village of Palm Springs | Owner's Task Order No.: 266

Contractor: Hinterland Group | Contractor's Project No.:

Engineer: Eckler Engineering | Engineer's Project No.: 400-089.01

Project: Vacuum Pump Station No 1 Improvements

The Contract is modified as follows upon execution of this Change Order:

Description: Contract deduct for Generator equipment credit (Generac) and costs associated with generator installation.

Attachments: Hinterland COP #3

CHANGE IN CONTRACT PRICE	CHANGE IN CONTRACT TIMES *[note changes in Milestones if applicable]*
Original Contract Price: $ 472,600.00 ($111,100.00 - TO #266)	Original Contract Times Substantial Completion: 3/21/2022 Ready for Final Payment: 4/20/2022 dates
[~~Increase~~] [~~Decrease~~] from previously approved Change Orders No. 0 to No. 0 : $ 0.00	[~~Increase~~] [~~Decrease~~] from previously approved Change Orders No. 0 to No. 0 : Substantial Completion: 0 Ready for Final Payment: 0 days
Contract Price prior to this Change Order: $ 472,600.00 ($111,100.00 - TO #266)	Contract Times prior to this Change Order: Substantial Completion: 3/21/2022 Ready for Final Payment: 4/20/2022 dates
[~~Increase~~] [Decrease] of this Change Order: $ -51,549.95	[~~Increase~~] [~~Decrease~~] of this Change Order: Substantial Completion: 0 Ready for Final Payment: 0 days
Contract Price incorporating this Change Order: $ 421,050.05 ($59,550.05 - TO #266)	Contract Times with all approved Change Orders: Substantial Completion: 3/21/2022 Ready for Final Payment: 4/20/2022 days or dates

RECOMMENDED:	ACCEPTED:	ACCEPTED:
By: [signature]	By:	By: [signature]
Engineer (if required)	Owner (Authorized Signature)	Contractor (Authorized Signature)
Title: Engineer - Eckler Engineering	Title	Title Project Director - HG
Date: April 22, 2022	Date	Date 5/3/22

The CONTRACTOR and the OWNER agree that this CHANGE ORDER represents the complete agreement of the parties with respect to these matters as of the date of this CHANGE ORDER. By approving this Change Order, the CONTRACTOR releases any and all claims that it may have against the OWNER under the subject contract including, but not limited to claims for equitable adjustments, which occurred or accrued prior to the effective date of this CHANGE ORDER except those claims made in writing to the OWNER prior to the effective date of this CHANGE ORDER. The effective date of this Change Order is the date it is approved by the OWNER.

This Change Order may be executed in counterparts and is not effective until approved by either the Village Manager or Village Council (as designated on the second page of this Change Order).

_____
Contractor Initial

IN WITNESS WHEREOF, the OWNER/VILLAGE has approved this Change Order No. 1 to the Vacuum Pump Station No 1 Improvements Project on _____, 2022.

VILLAGE OF PALM SPRINGS, FLORIDA

By: _____
Beverly Smith, Mayor

ATTEST:

_____
Kimberly Wynn, Village Clerk

Approved as to form and legal sufficiency:

_____
Glen J. Torcivia, Village Attorney

Change Order Proposal

To: Village of Palm Springs
Attn: Chase Dickinson

Date: March 23, 2022
Revised: April 6, 2022
Proposal No: 003
HG Project No: 21-0124-00

Project: Vacuum Pump Station No. 1 Improvement

Description:

This change order includes the removal of the generator and installation from the scope of work of the project.

Labor & Material

Item #	Description	Qty	Unit	Unit Price	Extended Price	Additional Time
1	**Credit For Generator Removal**					
2	Generac Generator	-1	EA	$41,117.00	$ (41,117.00)	
3	Crane to Set Generator	-6	HR	$250.00	$ (1,500.00)	
4	Electrical Crew for Setting Generator and Connection	-12	HR	$300.00	$ (3,600.00)	
5						
6	***All time associated with this change is included in CO #2***					
7						

Subtotal:	$ (46,217.00)	
Tax:	$ (2,878.19)	
Contractor Fee Credit (5%):	$ (2,454.76)	
GRAND TOTAL:	$ (51,549.95)	

Best Regards,

Kervin Flores-Garcia
Project Manager

Hinterland Group Inc. Corporate Office
2051 W Blue Heron Blvd. Riviera Beach, FL 33404 - Ph 561-640-3503 - Fax 561-640-3504
Page 1 of 1

GENSET SERVICES, INC.

Sales & Service for Standby Engine Generators

GENERAC | INDUSTRIAL POWER

Proposal#: 26857	Proposal Date: 11/18/2021	Valid Until: 12/18/2021

Revision : 5

Job Name: **Palm Springs Pump Station #1**

Prepared For: Hinterland Group

Contact: Mike Carter

Project Rep: Michael Bright

Phone: 954-956-9252

Email: mbright@gensetservices.com

We are pleased to offer the following proposal:

Quantity 1 - Generac Industrial diesel engine-driven generator set with turbocharged 4-cylinder 4.5L engine, consisting of the following features and accessories:

- Stationary Emergency-Standby rated
- 80 kW Rating, wired for 120/240 VAC three phase, 60 Hz
- Permanent Magnet Excitation
- Level 2 Acoustic Enclosure, Aluminum
  - Industrial Grey Baked-On Powder Coat Finish
- 200 MPH Wind Load Certified
- UL-142 Subbase Tank
  - 72hr Runtime
  - 12ft Vent Extension
  - FL DEP DERM
- UL2200
- EPA Certified
- H-100 Control Panel
  - Two 4-line x 20 displays, full system status
  - 3 Phase sensing, +/-0.25% digital voltage regulation
  - RS232, RS485 and Canbus remote ports
  - Waterproof connections
  - All engine sensors are 4-20ma for minimal interference
  - Programmable I/O
  - Built-in PLC for special applications
  - Full range standby operation; programmable auto crank, Emergency Stop, Auto-Off-Manual switch
  - Isochronous Governor, +/-0.25% frequency regulation
  - Full system status on all AC output and engine function parameters
  - Service reminders, trending, fault history (alarm log)
  - I2T function for full generator protection
  - Selectable low-speed exercise
  - Meets NFPA 99 and 110 requirements
  - Temp Range -40 to 70 degrees C
  - Digital Microprocessor:
  - Engine function monitoring and control:
  - HTS transfer switch function monitoring and control
  - 2-wire start controls for any 2-wire transfer switch
- 21 Light Remote Annunciator

    - Surface-Mount
    - Integral 8 Function Relay Board
- Remote Emergency Stop Switch, Break-Glass, shipped loose
- 110 AH, 925 CCA Group 31 Battery, with rack, installed
- Flashing Red DC Powered Beacon on Enclosure
- Battery Charger, 10 Amp, NFPA 110 compliant, installed
- Coolant Heater, 1500W, 120VAC
- AC/DC Enclosure Interior LED Lighting Kit
- 3 Owner's Manuals
- 120V GFCI and 240V Outlet
- 8 Position 1PH Load Center
- Alternator Strip Heater
- Flex Fuel Line
- MLCB, 80% rated, LSI Electronic Trip
    - 200 Amp
    - Shunt trip and Auxiliary Contacts
- 1 Hour factory load testing at reactive (0.8) power factor
- 2-Year Comprehensive Warranty
- SD0035JG174.5D18HPLY3

Quantity 1 - PSTS Series Automatic Transfer Switch consisting of the following features and accessories:

- Standard Open Transition
- 32F - Inphase Transfer
- Contactor-Based Design
- 200 Amp, 3 Pole, 120/240 VAC Three phase
- CSA C22.2 Certified
- CUL Listed
- UL1008 Listed
- NEMA 4X Enclosure
- ATC-300+ Microprocessor-Based Controller
    - Sensing and Programmable Setpoints for both Normal (S1) and Emergency (S2): Under-voltage/Under-frequency, Over-voltage/Over-frequency; Voltage Unbalance Sensing and Phase Reversal for all phases
    - Adjustable Time Delays: Engine Start, Transfer Normal to Emergency & Emergency to Normal, Engine Cooldown, Emergency Fail
    - Pushbutton for Bypassing Time Delays on Transfer/Retransfer
    - Test Pushbutton
    - Contacts for Go to Emergency (S2)
    - MODBUS Communication
    - Digital Programmable Plant Exerciser:
        - Off, 1-Day, 7-Day, 14-Day, 28-Day Intervals
        - Adjustable 0-600 Minutes Run Time
        - Selectable for Load or No Load
    - Auxiliary Contacts:
        - Normal (S1) Source Present (2 Form C)
        - Emergency (S2) Source Present (2 Form C)

        - Normal (S1) Position Indication (1 Form C)
        - Emergency (S2) Position Indication (1 Form C)
        - Pre-Transfer Signal Contacts (1 Form C)
    - 2-Line, 32-Character Alphanumeric LCD Display
    - Front Panel Mimic Diagram with colored LEDs for Source/Load Indication
    - Standard Features:
- 32F - In-Phase Transition
- 41A - 100W Space Heater with Adjustable Thermostat
- 9C - Monitor Mode Selector Switch
- 42 - IBC/CBC Seismic Qualified
- 36 - Load Shed from Emergency
- Normal Terminal Mechanical Lugs, Customer Connection: (1) #6-250MCM per phase
- Emergency Terminal Mechanical Lugs, Customer Connection: (1) #6-250MCM per phase
- Load Terminal Mechanical Lugs, Customer Connection: (1) #6-250MCM per phase
- Neutral Terminal Mechanical Lugs, Customer Connection: (3) 1/0-250MCM
- 2-Year Extended Warranty
- ATC3C2X20200WDU

Quantity 1 - Freight to Site

Quantity 1 - Startup and 4hr Load Bank

Total investments for the above equipment (not including any taxes): Cost for ATS to be deducted **$ 50,450.00**

Terms and Conditions:

30% deposit with order, balance before shipping. Other payment terms need to be approved by the credit department before a purchase order is accepted. Payment obligations are not dependent or contingent upon the manner in which purchaser may receive.

Estimated Delivery: 20-24wks

FOB: jobsite installation and offloading by others unless included in the above BOM

Quoted Per: Plans dated 11/19/20

GENSET SERVICES, INC.

Sales & Service for Standby Engine Generators

GENERAC | INDUSTRIAL POWER

Proposal#: 33212	Proposal Date: 02/21/2022	Valid Until: 03/23/2022

Revision : 0

Job Name: **Palm Springs Pump Station #1**

Prepared For: Hinterland Group

Contact: Mike Carter

Project Rep: Michael Bright

Phone: 954-956-9252

Email: mbright@gensetservices.com

We are pleased to offer the following proposal:

Quantity 1 - PSTS Series Automatic Transfer Switch consisting of the following features and accessories:

- Standard Open Transition
- 32F - Inphase Transfer
- Contactor-Based Design
- 200 Amp, 3 Pole, 120/240 VAC Three phase
- CSA C22.2 Certified
- CUL Listed
- UL1008 Listed
- NEMA 4X Enclosure
- ATC-300+ Microprocessor-Based Controller
    - Sensing and Programmable Setpoints for both Normal (S1) and Emergency (S2): Under-voltage/Under-frequency, Over-voltage/Over-frequency; Voltage Unbalance Sensing and Phase Reversal for all phases
    - Adjustable Time Delays: Engine Start, Transfer Normal to Emergency & Emergency to Normal, Engine Cooldown, Emergency Fail
    - Pushbutton for Bypassing Time Delays on Transfer/Retransfer
    - Test Pushbutton
    - Contacts for Go to Emergency (S2)
    - MODBUS Communication
    - Digital Programmable Plant Exerciser:
        - Off, 1-Day, 7-Day, 14-Day, 28-Day Intervals
        - Adjustable 0-600 Minutes Run Time
        - Selectable for Load or No Load
    - Auxiliary Contacts:
        - Normal (S1) Source Present (2 Form C)
        - Emergency (S2) Source Present (2 Form C)
        - Normal (S1) Position Indication (1 Form C)
        - Emergency (S2) Position Indication (1 Form C)
        - Pre-Transfer Signal Contacts (1 Form C)
    - 2-Line, 32-Character Alphanumeric LCD Display
    - Front Panel Mimic Diagram with colored LEDs for Source/Load Indication
    - Standard Features:
- 32F - In-Phase Transition
- 41A - 100W Space Heater with Adjustable Thermostat
- 9C - Monitor Mode Selector Switch
- 42 - IBC/CBC Seismic Qualified

Proposal#: 33212	Proposal Date: 02/21/2022	Valid Until: 03/23/2022

Revision : 0

- 36 - Load Shed from Emergency
- Normal Terminal Mechanical Lugs, Customer Connection: (1) #6-250MCM per phase
- Emergency Terminal Mechanical Lugs, Customer Connection: (1) #6-250MCM per phase
- Load Terminal Mechanical Lugs, Customer Connection: (1) #6-250MCM per phase
- Neutral Terminal Mechanical Lugs, Customer Connection: (3) 1/0-250MCM
- 2-Year Extended Warranty
- ATC3C2X20200WDU

Quantity 1 - Freight to Site

Quantity 1 - Commissioning

Total investments for the above equipment (not including any taxes): This cost to be deducted fro **$ 9,333.00**

Terms and Conditions:

30% deposit with order, balance before shipping. Other payment terms need to be approved by the credit department before a purchase order is accepted. Payment obligations are not dependent or contingent upon the manner in which purchaser may receive.

Estimated Delivery:	32-34wks
FOB:	jobsite installation and offloading by others unless included in the above BOM
Quoted Per:	email from chase ATS only
Exceptions to the specifications:	Price is valid until 3/22, if ordered on 3/22 or later – new cost is $10,542

Proposal#: 33212	Proposal Date: 02/21/2022	Valid Until: 03/23/2022

Revision : 0

Customer Authorization:

(by signing below, I acknowledge that I have read and accept the Genset terms and conditions that follow).

Signature: _____

Print Name: _____

Title: _____

Date: _____

P.O.#: _____

Proposal#: 33212 | **Proposal Date: 02/21/2022** | **Valid Until: 03/23/2022**

Revision : 0

Terms and Conditions

GENSET SERVICES SERVICE TERMS & CONDITIONS 1. Agreement and Order. The terms and conditions set forth below (the Terms and Conditions) and on Gensets proposal, quotation or order form attached hereto (collectively referred to as the "Proposal" and together with these Terms and Conditions, the Agreement) constitute the complete and exclusive statement of the terms of this transaction by and between Genset Services, Inc. (Genset) and the customer identified on the Proposal (the Customer) for the performance of the services specifically set forth on the Proposal (the Services). To the extent that the terms contained on the Proposal differ from the terms contained in these Terms and Conditions, the terms of the Proposal shall govern to the extent of such differences provided that Genset has executed the version of the Proposal containing such terms following the addition or inclusion of such terms. Genset shall have no obligation to perform other services not described on the Proposal, but Genset may provide other Services at Customers request, as and when needed pursuant to the Agreement. Any additional Services performed shall be subject to these Terms and Conditions 2. Parts. Genset shall furnish parts as necessary at Gensets then current scheduled price or on an exchange basis, regardless of when installed, and such parts shall either be new or equivalent to new in performance when used in Customers equipment. 3. Modification of Terms. No terms contained on any purchase order, service order, contract or other document prepared by or submitted to Genset by Customer or its agents, including modification of the terms contained on the Proposal and in these Terms and Conditions, shall be effective or bind Genset unless Genset agrees to such terms or requirements by executing and returning to Customer such purchase order, agreement or other document. Failure by Genset to respond in writing to Customer upon receipt of Genset of a purchase order or other agreement by Customer shall not be a waiver of the requirement that Genset agree in writing to any terms contained in a purchase order or other contract. All representations, promises, warranties or statements by any agent or employee of Genset that differ in any way from the Proposal as prepared by Genset or the Terms and Conditions in the Agreement shall be of no force or effect. No course of prior dealings between the parties and no usage of the trade shall be relevant to this transaction. Prices quoted on the Proposal are good for a period of thirty (30) days from the date of the Proposal, provided that prior to the execution of the Proposal by Customer and acceptance by Genset, prices are subject to change without notice. 4. Charges. Charges for the Services described on the Proposal are described thereon. Charges for on-call, unscheduled or additional Services requested by Customer, but not described on the reverse, shall be at the rates then published by Genset in writing. Customer shall be responsible for any parts and shipping charges for such parts ordered by Genset in order to perform the Services 5. Taxes. Quoted prices do not include any applicable sales, use, transfer, excise or other taxes, tariffs or custom duties unless required by federal, state or local law, in which case, the quoted price shall include only such items of sales, use, transfer, excise or other taxes, tariffs or custom duties as are required by federal, state or local law. Customer will pay directly or to Genset any such taxes, tariffs or duties levied upon the sale, transfer, import, or service or necessary components thereof unless Customer provides Genset with a valid tax exemption certificate. Genset shall provide Customer with any tax payment certificate upon request and after acceptance of the Services being provided hereunder and full payment to Genset. 6. Time of Performance. If performance of the Services is delayed through no fault of Genset, then the time for performance of the work shall be extended to the extent of such delay. Genset shall not be liable for any delays in performance directly or indirectly resulting from acts of Customer, its agents, employees, or subcontractors, or any other causes beyond the control of Genset. If any necessary components of the Services become unavailable, then Genset shall be released from any obligation to provide the specified materials which are unavailable and Customer agrees to pay Genset for any difference between the cost of the unavailable materials or equipment and the cost of any reasonably available substitute. The estimated date of performance indicated on the Proposal is subject to delay due to availability of necessary components, and Genset shall not be liable for any such delay. 7. Payment. Upon Customers execution and return of the Proposal, Customer must provide a deposit in the amount of 30% of the service fee contained in the Proposal unless some other amount is set forth on the Proposal. Unless otherwise set forth on the Proposal, the entire service fee, plus all applicable sales tax and other charges contained on the Proposal must be tendered by Customer to Genset within 2 days following notification by Genset to Customer that the Services are ready to be performed. In any case full and final payment must be made by Customer and received by Genset no later than two days prior to Genset performing the Services, and Genset shall have no obligation to perform the Services prior to receiving full and final payment. Customer is responsible for the payment of all registration fees, use tax or similar assessments and taxes which may be imposed upon the service or the sale, possession or use of any necessary parts or components. Customer hereby grants Genset a security interest in Customers generator and any parts installed by Genset until such time as Genset is actually paid in full, and Customer will assist Genset in any action necessary to perfect Gensets security interest, provided that Genset may prepare, file and record a UCC financing statement to evidence the security interest with no further notice to or consent by Customer. No parts or components furnished by Genset shall become a fixture by reason of being attached to real estate until payment in full has been received and acknowledged by Genset. Customer shall not be entitled to set-off any amounts due from Customer against any amount due to Genset in connection with this transaction. 8. Warranty; Limitation. (a) CUSTOMER ACKNOWLEDGES THAT THE ONLY WARRANTIES WITH RESPECT TO THE SERVICES ARE ANY APPLICABLE WARRANTIES 4813-9727-5146.1 OFFERED BY THE MANUFACTURER OF ANY NECESSARY PART OR COMPONENT THEREOF AND THAT GENSET MAKES NO REPRESENTATION OR WARRANTY, EXPRESS OR IMPLIED, WITH RESPECT TO THE SERVICES, NOR DOES IT WARRANT THE MERCHANTABILITY OF THE COMPONENTS OR THAT THE COMPONENTS ARE FIT FOR A PARTICULAR PURPOSE. PARTS AND COMPONENTS ARE SOLD AND SERVICES PROVIDED BY GENSET TO PURCHASER AS IS WHERE IS AND WITH ALL FAULTS. (b) CUSTOMER ACKNOWLEDGES THAT IT HAS DECIDED TO CONTRACT FOR SERVICES BASED ON ITS OWN ASSESSMENT OF ITS NEEDS. CUSTOMER ACKNOWLEDGES AND AGREES THAT GENSET HAS NOT MADE ANY STATEMENTS OF FACT CONCERNING THE SERVICES, AND CUSTOMER HAS NOT RELIED UPON ANY STATEMENT BY GENSET IN DECIDING TO CONTRACT FOR THE SERVICES. (c) CUSTOMER IS SOLELY RESPONSIBLE FOR FOLLOWING ALL MANUFACTURER REQUIREMENTS WITH RESPECT TO THE EQUIPMENT ON WHICH THE SERVICES ARE PERFORMED. (d) Customer further agrees that in no event shall Genset's liability to Customer for damages of any nature exceed the amounts actually paid by Customer to Genset for the Services. 9. Access to Equipment; Performance of Services; Customer Obligations. (a) Genset's maintenance personnel shall have free access to the Customers Equipment for the purpose of providing Services. (b) During any Services provided pursuant to this Agreement as to the System, whether an interruption in electrical service is contemplated by Customer or Genset or not, as a matter of allocating between Customer and Genset the risks associated with an interruption in electrical services and/or taking the Customers equipment off line, Customer agrees to use its best efforts to fully and completely secure all or any part of any facility in which the equipment is located, as the case may be, for any and all safety issues that an electrical service interruption might give rise to, including but not limited to injury to building occupants, customers, invitees, or any third party and/or property damage, or work interruption, arising out of any event of repairs performed by Genset as to the equipment. Customer agrees with Genset that securing of the premises in order for Genset to perform its Services is a material and critical element of this Agreement and, prior to the -performance of any Services under this Agreement, Customer will receive and execute with Genset a written Notification and Acknowledgement of Inspection and Warning (Notification) related to the Services provided herein. The Notification shall include Genset's estimate as to when interruption of electrical services may occur during the performance of its obligations under this Agreement. Customer further agrees that Genset shall have no liability to Customer or any third party for any estimate given in connection with potential interruptions in electrical services during the performance of Genset's obligations herein, it being acknowledged by Customer that Genset's Services are often affected by acts of third parties and/or components or elements of the System that do not allow for more specific and accurate estimates as to when an electrical service interruption may occur. 10. Damages. CUSTOMER AGREES THAT GENSET SHALL NOT BE LIABLE BEYOND THE REMEDIES EXPRESSLY SET FORTH HEREIN. GENSET SHALL NOT BE RESPONSIBLE FOR ANY SPECIAL, INCIDENTAL, INDIRECT OR CONSEQUENTIAL DAMAGES ARISING IN ANY MANNER FROM THE GOODS, EQUIPMENT OR MATERIALS FURNISHED OR THE WORK PERFORMED PURSUANT TO THE AGREEMENT, WHETHER BASED ON BREACH OF WARRANTY, NEGLIGENCE, STRICT LIABILITY IN TORT OR OTHERWISE, OR FOR THE LOSS OF PROFITS, REVENUES, OR OTHER LOSSES ARISING OUT OF ANY DEFAULT UNDER THIS AGREEMENT, EVEN IF GENSET SHALL HAVE BEEN ADVISED OF THE POSSIBILITY OF SUCH POTENTIAL LOSS OR DAMAGE. THE PRICE OF THE GOODS AND SERVICES PURCHASED BY CUSTOMER IS CONSIDERATION FOR LIMITING GENSETS LIABILITY. GENSETS LIABILITY FOR ANY CLAIM ASSERTED BY CUSTOMER, WHETHER BASED ON A THEORY OF CONTRACT OR TORT, SHALL NOT EXCEED THE CONTRACT PRICE OF THE SERVICES HEREUNDER. NO ACTION OR SUIT TO ENFORCE RIGHTS OR REMEDIES ARISING FROM THIS TRANSACTION SHALL BE COMMENCED LATER THAN ONE YEAR FROM THE DATE OF GENSETS LAST FURNISHING SERVICES UNDER THIS AGREEMENT. 11. Cancellation. Service Orders cannot be cancelled or after Customer signs and returns a Proposal which is accepted by Genset, except with Gensets written consent and subject to conditions then agreed upon which shall indemnify Genset against liability and expense incurred and commitments made by Genset. No materials or products provided in conjunction with the Services may be returned. 12. Indemnity. Customer represents and warrants that is fully insured for any and all potential damages arising out of or in connection with the Services performed by or to be performed by Genset hereunder. Customer shall defend, indemnify and hold harmless Genset and its officers, directors, employees, agents, owners and affiliates, from and against any and all damages, costs, liability, and expense whatsoever (including attorneys' fees and related disbursements) incurred in whole or in part, directly or indirectly, by reason of: (a) any failure by Customer to perform any covenant 4813-9727-5146.1 or agreement of Customer set forth herein or the breach of any representations or warranties set forth herein; (b) death or bodily injury or loss of or damage to property which arising out of or in connection with the Services provided and any goods, parts or components provided; or (c) any acts of Customer or Customer's personnel; or (d) the unloading, installation, operation, storage or use by Customer of any goods provided by Genset or any other party or subsequent owner. The foregoing obligation shall survive the termination or expiration of this Contract. 13. Miscellaneous. In addition to the other terms and conditions, Customer and Genset further agree that the following shall also govern this Agreement: (a) Waivers. The failure or delay of any party at any time to require performance by another party of any provision of this Agreement, even if known, shall not affect the right of such party to require performance of that provision or to exercise any right, power or remedy under this Agreement. Any waiver by any party of any breach of any provision of this Agreement should not be construed as a waiver of any continuing or succeeding breach of such provision, a waiver of the provision itself, or a waiver of any right, power or remedy under this Agreement. No notice to or demand on any party in any circumstance shall, of itself, entitle such party to any other or further notice or demand in similar or other circumstances. (b) Governing Law; Construction. This Agreement is being delivered and performed in the State of Florida and shall be construed in accordance with, and governed by, the law of the State of Florida. Venue of any action related to this Agreement shall be placed in the courts of Broward County, Florida, exclusively. This Agreement, together with any other documents executed in conjunction with or pursuant to this Agreement shall not be construed against either Customer or Genset, regardless of which party drafted the Agreement. It is intended that this Agreement is the product of informed negotiations between both parties with full knowledge of the meaning of the terms and conditions hereto. (c) Enforcement. In connection with any action arising out of this Agreement, or in any way relating to the transactions contemplated hereby, the prevailing party in such action shall be entitled to recover from the non-prevailing party all court costs and expenses of litigation, including attorneys fees, court costs, costs of investigation, accounting and other costs reasonably related to the litigation, including, without limitation, all attorneys fees and costs subsequent to entry of any judgment on behalf of the prevailing party, on appeal; in connection with any bankruptcy proceedings, or in any alternative dispute resolution proceedings. THE PARTIES TO THIS AGREEMENT HEREBY WAIVE, WITHOUT EXCEPTION, ANY RIGHT TO JURY TRIAL RELATED TO ANY ISSUE OR MATTER ARISING OUT OF OR IN CONNECTION WITH THIS AGREEMENT. (d) Successors and Assigns. All of the terms and conditions of this Agreement, and the -rights and obligations of the parties hereunder, shall be binding upon and shall inure to the benefit of the respective heirs, personal representatives, and permitted successors and assigns of the parties hereto. This Agreement does not confer upon or give to any person other than the parties any rights or benefits hereunder. (e) Entire Agreement. This Agreement, any Agreements referenced herein and exhibits attached hereto constitute the entire Agreement and understanding of the parties with respect to the transactions contemplated hereby as an exclusive statement and incorporate and supercede all prior and contemporaneous negotiations, agreements and understandings related to the subject matter hereof. This Agreement, referenced Agreements, and exhibits may not be amended, terminated or otherwise modified, except by a written instrument executed by all of the parties to be bound thereby. (f) Notice. Subject to written notice of change of address, any notice, request, instruction, or other document to be given under this Agreement by any party to any other party shall be in writing, signed by or on behalf of the party giving notice, and shall be deemed to have been given on the earlier to occur of: (1) the date of actual performance; or (2) five (5) days after the date on which such notice is mailed by United States Mail, postage prepaid to each party at the addresses listed below; or (3) the date of electronic facsimile transmission that is verified by the issuance of a successful facsimile transmission report at the facsimile telephone number for the receiving party, which is currently on file with the sending party; or (4) the business day following the day on which such notice is sent by any next day or overnight delivery service to each party at the address listed below. If to Customer: To the address and contact person identified on the Proposal. If to Genset: Genset Services, Inc., 3100 Gateway Drive, Pompano Beach, FL 33069 Genset shall not be in default of any of its obligations hereunder unless Customer provides Genset with seven (7) days written notice of default and specifying the action required to cure the default and Genset fails to cure such default.

ECKLER ENGINEERING, INC.

May 4, 2022 (Sent via email to wsanchez@vpsfl.org)
400-089.03

Mr. Walt Sanchez
226 Cypress Lane
Palm Springs, Florida 33461

Dear Mr. Sanchez:

Reference: Change Order Request No. 2
Vacuum Pump Station No. 1 Improvements
Task Order Number: 266

Attached is Change Order Request Number 2 for the above referenced project. Change Order Request Number 2 increases the contract time for the project due to permitting delays and delays in receiving material.

Please review the enclosed documents and if everything meets with your approval, have the appropriate Village personnel sign where indicated by Owner on page 1 of 1 of the attached Change Order document. Once you have completed your review and these documents have been signed, return a scanned copy to our office. We will forward the documents to Hinterland Group, Inc. for their files.

If you have any questions or require additional information pertaining to this project, please do not hesitate to contact me.

Sincerely,

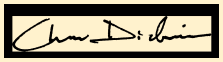

Chase Dickinson, P.E.

Encl.

Y:\Documents\Village\400-089.03 Vacuum Pump Station No.1 Improvements - SDC\Change Orders\Change Order No. 2 - Time Extension\To Village\Change Order Request No. 2 Cover Letter.docx

4700 RIVERSIDE DRIVE, SUITE 110
CORAL SPRINGS, FL 330367
954/510-4700
FAX 954/755-2741

Change Order No. 2

Date of Issuance: April 22, 2022
Effective Date:

Owner: Village of Palm Springs
Owner's Task Order No.: 240, 266, 278

Contractor: Hinterland Group
Contractor's Project No.:

Engineer: Eckler Engineering
Engineer's Project No.: 400-089.01

Project: Vacuum Pump Station No 1 Improvements

The Contract is modified as follows upon execution of this Change Order:

Description: Contract time extension due to permitting and materials delays

Attachments: Hinterland COP #2

CHANGE IN CONTRACT PRICE	CHANGE IN CONTRACT TIMES *[note changes in Milestones if applicable]*
Original Contract Price: $ 472,600.00	Original Contract Times Substantial Completion: 3/21/2022 Ready for Final Payment: 4/20/2022 dates
[Increase] [~~Decrease~~] from previously approved Change Orders No. 0 to No. 1 : $ -51,549.95	[~~Increase~~] [~~Decrease~~] from previously approved Change Orders No. 0 to No. 1 : Substantial Completion: 0 Ready for Final Payment: 0 days
Contract Price prior to this Change Order: $ 421,050.05	Contract Times prior to this Change Order: Substantial Completion: 3/21/2022 Ready for Final Payment: 4/20/2022 dates
[~~Increase~~] [~~Decrease~~] of this Change Order: $ 0.00	[Increase] [~~Decrease~~] of this Change Order: Substantial Completion: 290 Ready for Final Payment: 290 days
Contract Price incorporating this Change Order: $ 421,050.05	Contract Times with all approved Change Orders: Substantial Completion: 1/5/2023 Ready for Final Payment: 2/6/2023 days or dates

RECOMMENDED:	ACCEPTED:	ACCEPTED:
By: _____	By: _____	By: _____
Engineer (if required)	Owner (Authorized Signature)	Contractor (Authorized Signature)
Title: Engineer - Eckler Engineering	Title _____	Title PROJECT DIRECTOR - HG
Date: May 3, 2022	Date _____	Date 5/3/22

The CONTRACTOR and the OWNER agree that this CHANGE ORDER represents the complete agreement of the parties with respect to these matters as of the date of this CHANGE ORDER. By approving this Change Order, the CONTRACTOR releases any and all claims that it may have against the OWNER under the subject contract including, but not limited to claims for equitable adjustments, which occurred or accrued prior to the effective date of this CHANGE ORDER except those claims made in writing to the OWNER prior to the effective date of this CHANGE ORDER. The effective date of this Change Order is the date it is approved by the OWNER.

This Change Order may be executed in counterparts and is not effective until approved by either the Village Manager or Village Council (as designated on the second page of this Change Order).

_____
Contractor Initial

IN WITNESS WHEREOF, the OWNER/VILLAGE has approved this Change Order No. __1__ to the _Vacuum Pump Station No 1 Improvements_ Project on _____, 2022.

VILLAGE OF PALM SPRINGS, FLORIDA

By: _____

ATTEST:

_____
, Village Clerk

Approved as to form and legal sufficiency:

_____
Glen J. Torcivia, Village Attorney

March 22nd, 2022
Revised April 21, 2022

VPSVPS-002

Eckler Engineering, Inc.
4700 Riverside Dr., Suite 110
Coral Springs, FL 33067

Attn: Chase Dickinson, P.E., Project Engineer

RE: PALM SPRINGS VACUUM PUMP STATION 1 IMPROVEMENTS
HGI Project No. 21-0124-00

Subject: Vacuum Pump Station – Time Extension Request – Unforeseen Project Delays

To whom it may concern,

We are hereby submitting this letter as a notice of delay to the subject project and a request for a time extension for the reasons listed and described below.

Due to the worldwide pandemic there have been multiple unforeseen delays with many of the key items to get this project started. Material lead times have proven to be excessive compared to those which are typically expected, especially relating to key project components such as the ATS and metal staircase. The lead time for the ATS which is a standard 8-12 week item is 36-40 weeks due to the stainless steel shortage.

There have also been delays and issues with regards to the building permit for this project. Due to the location of the station and the need to add additional easement areas, the process for applying for the permit was delayed. The lead time for obtaining permits through the building department has also proven to be exceptionally long as compared with normal processing times. This coupled with the fact that we cannot order the staircase until we receive building department approval on such poses further delay to the project.

Below is a timeline of the major events showing delay for the permitting process:

10/05/21 - Email sent to permits@vpsfl.org to initiate the permit process. Issues with parcel #

10/11/21 - Follow-up Email Sent to VPS

10/21/21 - Follow-up Email Sent to VPS

11/09/21 - HGI informed Eckler about the issues with the easement; Eckler indicated that they were going to take care of this matter and mentioned there were working with revisions to the drawings to be submitted with the permit application.

11/15/21 - Email received from Eckler notifying an issue with the stairs design (code compliance) and acknowledged HGI right to claim for a time extension.

12/03/21 - Email sent requesting updates on stairs and permit issues.

12/07/21 - Follow-up email to 12/03 email about stairs and permit issues.

Email received indicating to submit with the permit application current Signed & Sealed plans. Mentioned that the "exception" would be handled after permit approval.

Email sent indicating that the easement issue needs to be resolved to be able to submit the permit application.

Permit application is to be submitted to PBC rather than VPS.

12/22/21 - Email received with two options regarding the permit application.

1. *Submit the signed and sealed drawings you have now, and we will address the comments that come back.*

2. *Or wait until I can get revised signed and sealed drawings from our subconsultants prior to submitting. This will probably not happen until the new year.*

12/23/21 - Email sent indicating that updated signed and sealed copies were necessary to minimize potential delays in the permit process.

01/07/22 - Follow-up email sent regarding signed & sealed drawings

01/12/22 - Electronic signed & sealed drawings received.

01/13/22 - The permit application began to be filled out electronically. Email sent to EOR requesting additional owner information.

01/14/22 - Follow-up email sent regarding the additional owner information needed.

01/17/22 - Email received from Chase D. indicating that the information was requested to the owner.

01/19/22 - Eckler/VPS suggested HGI to get with PBC Building department to inquire how to fill out the application because the owner of the workshop still appears as the owner of the parcel in its entirety.

01/21/22 - Permit Application was finally accepted.

Present - Permit Application status appear as "In Process"

As displayed above the permitting process is quickly approaching 6 months in the making, which exceeds the current contract period for substantial completion. With many long lead items still pending delivery dates we would like to request an additional 290 days be added to the contract to account for the 6 months of lost time and extensive material lead times and to allow adequate time for the construction of the project upon material arrival.

Should any further information be needed please feel free to contact us

Sincerely,



Chase Rogers

Hinterland Group Inc.

Hinterland Group Inc. Corporate Office
2051 W Blue Heron Blvd. Riviera Beach, FL 33404• Ph 561-640-3503 • Fax 561-640-3504

Chase Rogers

From: Thomas Bertone <Thomas.Bertone@cityelectricsupply.com>
Sent: Wednesday, March 30, 2022 9:26 AM
To: Chase Rogers; Kervin Flores-Garcia; Marcos Ramirez
Cc: Daniel Duke
Subject: RE: Palm Springs Vacuum Pump

Good Morning Chase-

Currently showing a ship date of 12/22/22

Regards,

CITY ELECTRIC SUPPLY

Thomas Bertone
Branch Manager
222 Jupiter Street
Jupiter, Florida 33458
Tel. 561-746-6603 | **Cell.** 561-284-0702
Thomas.Bertone@cityelectricsupply.com | www.cityelectricsupply.com

NAED MEMBER

Download on the App Store
Get it on Google play

From: Chase Rogers <crogers@hinterlandgroup.com>
Sent: Wednesday, March 30, 2022 9:14 AM
To: Thomas Bertone <Thomas.Bertone@cityelectricsupply.com>; Kervin Flores-Garcia <KFlores@hinterlandgroup.com>; Marcos Ramirez <mramirez@hinterlandgroup.com>
Cc: Daniel Duke <dduke1@hinterlandgroup.com>
Subject: RE: Palm Springs Vacuum Pump

Thomas,
Following up to see if ETA had any kind of ETA in their system yet for this ATS?

CHASE ROGERS
Crogers@hinterlandgroup.com

2051 W. BLUE HERON BLVD
RIVIERA BEACH, FL 33404
OFFICE – 561-640-3503
FAX – 561-640-3504
MOBILE – 561-543-9680

Eaton Corporation
221 Heywood Road
Arden, NC 28704

March 21st, 2022

Subject: Automatic Transfer Switches

Dear valued customer,
As you may be experiencing increased delivery service delays from Eaton, we would like to provide additional clarity on our current situation.

Along with many other companies, Eaton has been challenged with an increased customer demand in 2021-2022, in conjunction with commodity shortages and extended lead-times from suppliers. We are experiencing delays and shortages from our suppliers of microelectronics, resins, and multiple bought outside components. Our engineering teams are diligently working with supply chain leadership to qualify new suppliers and components. We highly appreciate your confidence in Eaton as a valued supplier.

Due to the heightened demand and global labor shortages, we believe the supply situation will remain tight. Rest assured, that we are doing the utmost to keep our production running in order to provide you the support that you are used to from Eaton.

Sincerely,

Trenton Thomas

Trenton Thomas
ATS Product Line Manager

ID	Task Mode	Task Name	Duration	Start	Finish	Predecessors
0		**21-0124-00 - Palm Springs VPS No1 - Baseline Schedule TI**	**381 days**	**Mon 8/23/21**	**Mon 2/6/23**	
1		**Notice to Proceed**	**1 day**	**Mon 8/23/21**	**Mon 8/23/21**	
2		Submittal production	6 wks	Tue 8/24/21	Mon 10/4/21	1
3		Submittal Review Period	45 days	Tue 8/31/21	Mon 11/1/21	2FF+20 days
4		Permitting	12 wks	Fri 1/21/22	Thu 4/14/22	1
5		ATS Production	41 wks	Mon 3/14/22	Fri 12/23/22	1
6		Vacuum Pumps Submittal Evaluation	20 days	Fri 9/3/21	Thu 9/30/21	2SS+1.6 wks
7		Vacuum Pumps Production	5 wks	Fri 10/1/21	Thu 11/4/21	6
8		Aluminum Stairs Submittal Evaluation	20 days	Mon 3/21/22	Fri 4/15/22	2,4FF+1 day
9		Aluminum Stairs Production	12 wks	Mon 4/18/22	Fri 7/8/22	8
10		Materials Production	2 wks	Fri 4/15/22	Thu 4/28/22	3,4
11		Call Locates	1 day	Tue 4/26/22	Tue 4/26/22	13SS-3 days
12		**Construction**	**180 days**	**Fri 4/29/22**	**Thu 1/5/23**	
13		Mobilization	2 days	Fri 4/29/22	Mon 5/2/22	4,7,10
14		Potholing Utilities	1 day	Fri 4/29/22	Fri 4/29/22	13SS
15		Relocate Pump Out Connection	3 days	Mon 5/2/22	Wed 5/4/22	14
16		**Vacuum Pumps Installation**	**9 days**	**Thu 5/5/22**	**Tue 5/17/22**	
17		Modify Piping Assembly	3 days	Thu 5/5/22	Mon 5/9/22	15
18		Install Vacuum Pump #1	2 days	Tue 5/10/22	Wed 5/11/22	17
19		Startup VP#1	1 day	Thu 5/12/22	Thu 5/12/22	18
20		Install Vacuum Pump #2	2 days	Fri 5/13/22	Mon 5/16/22	19
21		Startup VP#2	1 day	Tue 5/17/22	Tue 5/17/22	20
22		Demolition	1 wk	Wed 5/18/22	Tue 5/24/22	21
23		Excavation for New Access Building	3 days	Wed 5/25/22	Fri 5/27/22	22
24		New Access Building Footing (Form, Rebar & Pour)	5 days	Mon 5/30/22	Fri 6/3/22	23
25		New Access Building Walls (Form, Rebar & Pour)	5 days	Mon 6/6/22	Fri 6/10/22	24
26		New Access Building Roof (Form, Rebar & Pour)	4 days	Mon 6/13/22	Thu 6/16/22	25
27		Finishes (Interior and Exterior)	4 days	Fri 6/17/22	Wed 6/22/22	26
28		Install Aluminum Grating Platform and Sta	4 days	Mon 7/11/22	Thu 7/14/22	27,9
29		Install XYPEX Roofing System	3 days	Thu 6/23/22	Mon 6/27/22	27
30		**Electrical Works, Generator**	**149 days**	**Mon 6/13/22**	**Thu 1/5/23**	
31		Underground Conduit	2 days	Mon 6/13/22	Tue 6/14/22	25
32		Generator Slab	5 days	Wed 6/15/22	Tue 6/21/22	31
33		Install Automatic Transfer Switch	2 days	Mon 12/26/22	Tue 12/27/22	27,5
34		Wiring	3 days	Wed 12/28/22	Fri 12/30/22	33
35		Electrical Inspections	1 day	Mon 1/2/23	Mon 1/2/23	34
36		Commissioning and Startup	3 days	Tue 1/3/23	Thu 1/5/23	35
37		Fence Modifications and Installation	3 days	Thu 6/23/22	Mon 6/27/22	27,32
38		Restoration	3 days	Tue 6/28/22	Thu 6/30/22	37
39		Partial Demobilization	1 day	Fri 7/1/22	Fri 7/1/22	38
40		**Contract Substantial Completion**	**0 days**	**Thu 1/5/23**	**Thu 1/5/23**	**12**
41		Final Walkthrough & Punch-out	10 days	Fri 1/6/23	Thu 1/19/23	40
42		Contract Close-out Documentation	22 days	Fri 1/6/23	Mon 2/6/23	40
43		**Contract Final Completion**	**0 days**	**Mon 2/6/23**	**Mon 2/6/23**	**42**

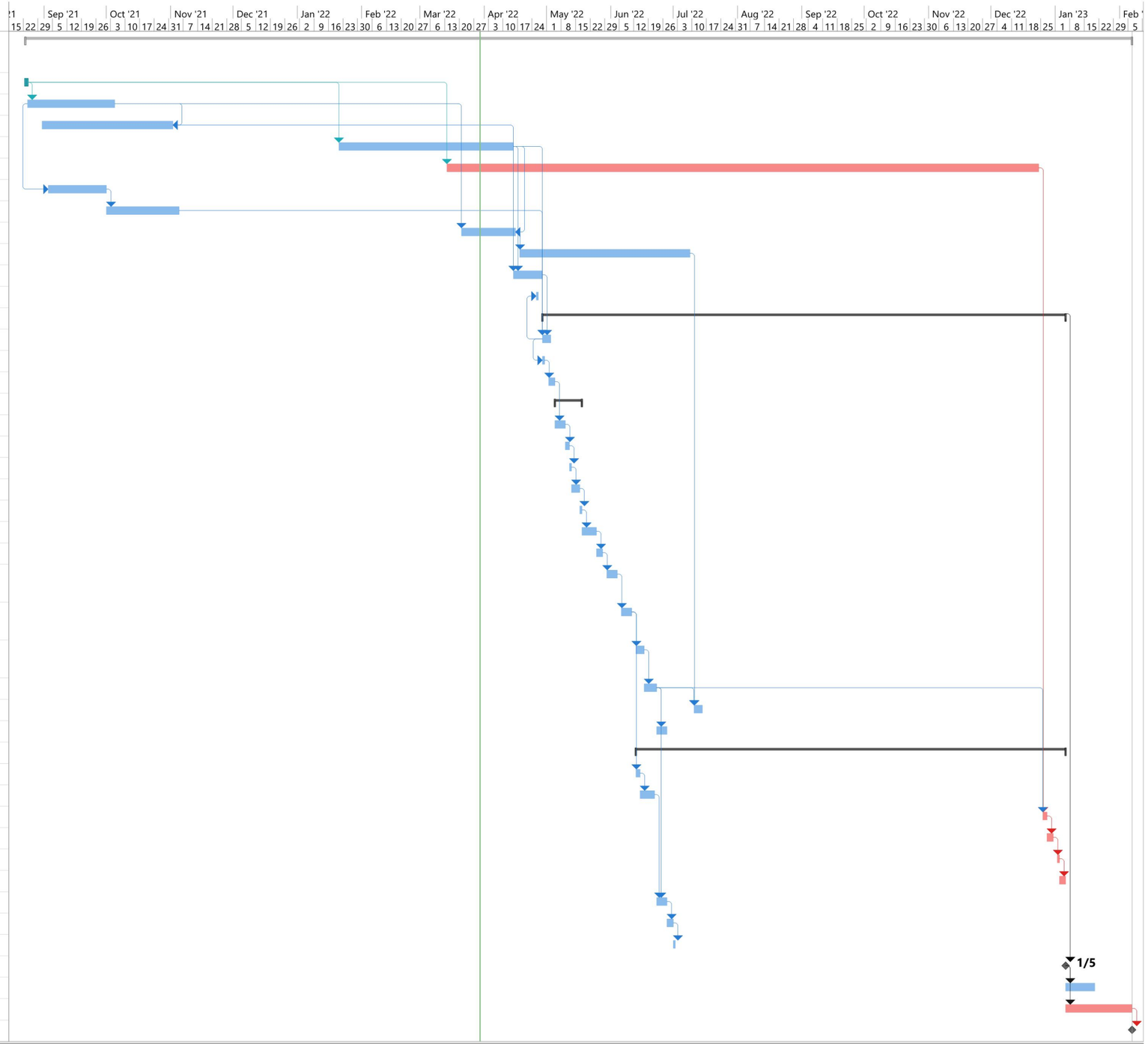

Project: 21-0124-00 - Palm Spr
Date: Wed 3/30/22

Task	Summary	Inactive Milestone	Duration-only	Start-only	External Milestone	Critical Split	
Split	Project Summary	Inactive Summary	Manual Summary Rollup	Finish-only	Deadline	Progress	
Milestone	Inactive Task	Manual Task	Manual Summary	External Tasks	Critical	Manual Progress	

Kervin Flores-Garcia

From: Adrian Rodriguez
Sent: Thursday, October 21, 2021 3:20 PM
To: permits@vpsfl.org
Subject: RE: Village of Palm Springs Vacuum Pump Station 1

Good Afternoon,

Following up with my request, after I made a call to the office, someone told me they were going to ask a supervisor and get right back to me.

Do you guys have any answers for me, please advise.

Adrian Rodriguez
Assistant Project Manager
Hinterland Group, Inc.
2051 West Blue Heron Blvd
Riviera Beach, Florida 33404
C : (786) – 768-7252

From: Adrian Rodriguez
Sent: Monday, October 11, 2021 5:09 PM
To: permits@vpsfl.org
Subject: RE: Village of Palm Springs Vacuum Pump Station 1

Hello,

I am following up with my last email, please advise how to proceed.

Thank you

From: Adrian Rodriguez
Sent: Tuesday, October 5, 2021 11:52 AM
To: permits@vpsfl.org
Subject: Village of Palm Springs Vacuum Pump Station 1

Good Morning,

We are the awarded GC company to perform the rehabilitation of this Vacuum Station, we need to get an electrical and a building permit for the new addition of the station.

We are inputting the address given to us in the plans and all the are getting is the entire parcel including Atlas Auto Service.

Please advise how to procced.

Regards,

Adrian Rodriguez

Kervin Flores-Garcia

From: Adrian Rodriguez
Sent: Tuesday, November 9, 2021 8:50 AM
To: Chase Dickinson
Cc: Chase Rogers; Jay Breig; Kervin Flores-Garcia; Daniel Duke
Subject: RE: VPS No. 1 Building Permit
Attachments: RE: Village of Palm Springs Vacuum Pump Station 1

Hello Chase,

After all this emails and phone call the building departments has not gave me an answer yet on how they want us to apply for the permit, since the vacuum station is sharing the same parcel number as the main building on site.

Please advise if you have more information about the subject.

Thank you

From: Chase Dickinson <cdickinson@ecklerengineering.com>
Sent: Tuesday, November 9, 2021 8:45 AM
To: Adrian Rodriguez <arodriguez@hinterlandgroup.com>
Cc: Chase Rogers <crogers@hinterlandgroup.com>; Jay Breig <jbreig@hinterlandgroup.com>; Kervin Flores-Garcia <KFlores@hinterlandgroup.com>; Daniel Duke <dduke1@hinterlandgroup.com>
Subject: VPS No. 1 Building Permit

Adrian,

Has the building department permit been applied for yet for this project? Please let me know the status of the building department permit. Thanks.

Best Regards,

Chase Dickinson, P.E.
Project Engineer | Eckler Engineering, Inc.
4700 Riverside Dr., Suite 110 | Coral Springs, FL 33067
p 954.510.4700 | **c** 772.215.1930
e cdickinson@ecklerengineering.com

Kervin Flores-Garcia

From: Chase Dickinson <cdickinson@ecklerengineering.com>
Sent: Monday, November 15, 2021 11:46 AM
To: Chase Rogers
Cc: Jay Breig; Kervin Flores-Garcia; Adrian Rodriguez
Subject: Palm Springs Vacuum Station 1 - Stairs

Chase,

I want to bring to your attention an issue with the stairs for the Vac Station. During the process of the preparing the drawings and putting the project out for bid the Florida Building Code changed over to the 7th edition (2020). Part of the changes in the new FBC were the removal of Special Purpose Buildings Type F which is what these types of structures were previously classified as. However, with the new code, this category no longer exists and there is not an explicit category that the pump station falls under. This affects the stairs because the Building Department may be looking at them to meet the new code as it stands, which the stairs do not meet. We will most likely have to request an exemption from the Building Department for the stairs. In speaking with a building official, it is likely they will grant us the exemption. However, I do not want to approve the stairs shop drawing in the event that they do not grant us the exemption. I know that there may be an issue with time and Hinterland reserves the right to request for a time extension. We have a plan B if the exemption is not granted but will only resort to that if necessary. Feel free to call me with any questions or to discuss. I will keep you informed but we may want to review/discuss prior to you submitting for the Building Department permit. Thanks.

Best Regards,

ECKLER ENGINEERING
Chase Dickinson, P.E.
Project Engineer | Eckler Engineering, Inc.
4700 Riverside Dr., Suite 110 | Coral Springs, FL 33067
p 954.510.4700 | **c** 772.215.1930
e cdickinson@ecklerengineering.com

From: Adrian Rodriguez <arodriguez@hinterlandgroup.com>
Sent: Tuesday, November 2, 2021 4:49 PM
To: Chase Dickinson <cdickinson@ecklerengineering.com>
Cc: Jay Breig <jbreig@hinterlandgroup.com>; Kervin Flores-Garcia <KFlores@hinterlandgroup.com>
Subject: Palm Springs Vacuum Station 1

Good Afternoon Chase,

Please see the attach revise submittals for the stairs, please prioritize this submittals as it is a long lead time item.

Thank you

Adrian Rodriguez
Assistant Project Manager
Hinterland Group, Inc.
2051 West Blue Heron Blvd
Riviera Beach, Florida 33404
C : (786) – 768-7252

HG HINTERLAND GROUP INC

Kervin Flores-Garcia

From: Adrian Rodriguez
Sent: Tuesday, December 7, 2021 4:55 PM
To: Chase Dickinson
Cc: Kervin Flores-Garcia; Jay Breig; Chase Rogers
Subject: RE: Palm Springs Vacuum Station 1

We have the sign and seal plans ready to be submitted but we did not know under what parcel number or address to submitted them under, I imagine that after you send the easement tomorrow we will be able to move forward with this matter.

Thank you

Adrian Rodriguez
Assistant Project Manager
Hinterland Group, Inc.
2051 West Blue Heron Blvd
Riviera Beach, Florida 33404
C : (786) – 768-7252

From: Chase Dickinson <cdickinson@ecklerengineering.com>
Sent: Tuesday, December 7, 2021 4:46 PM
To: Adrian Rodriguez <arodriguez@hinterlandgroup.com>
Cc: Kervin Flores-Garcia <KFlores@hinterlandgroup.com>; Jay Breig <jbreig@hinterlandgroup.com>; Chase Rogers <crogers@hinterlandgroup.com>
Subject: RE: Palm Springs Vacuum Station 1

Adrian,

I left Chase Rogers a voicemail to follow up with your questions and to review some other items with him.

In short, the exception to the stairs will come after Hinterland submits to the Building Department. I have the new easement which I will send tomorrow. Has Hinterland submitted signed/sealed drawings to the Building Department already?

We are still reviewing the Generator submittal.

Best Regards,

Chase Dickinson, P.E.
Project Engineer | Eckler Engineering, Inc.
4700 Riverside Dr., Suite 110 | Coral Springs, FL 33067
p 954.510.4700 | **c** 772.215.1930
e cdickinson@ecklerengineering.com

From: Adrian Rodriguez <arodriguez@hinterlandgroup.com>
Sent: Tuesday, December 7, 2021 4:43 PM
To: Chase Dickinson <cdickinson@ecklerengineering.com>
Cc: Kervin Flores-Garcia <KFlores@hinterlandgroup.com>; Jay Breig <jbreig@hinterlandgroup.com>
Subject: RE: Palm Springs Vacuum Station 1

Good Afternoon Chase,

Following up with my email to see if we can get any answers.

Thank you

Adrian Rodriguez
Assistant Project Manager
Hinterland Group, Inc.
2051 West Blue Heron Blvd
Riviera Beach, Florida 33404
C : (786) – 768-7252

From: Adrian Rodriguez
Sent: Friday, December 3, 2021 10:47 AM
To: Chase Dickinson <cdickinson@ecklerengineering.com>
Cc: Kervin Flores-Garcia <KFlores@hinterlandgroup.com>; Jay Breig <jbreig@hinterlandgroup.com>
Subject: Palm Springs Vacuum Station 1

Good Morning Chase,

I want to know where are standing on this project since there are some unresolve matters.

Where we able to get the exception for the ladder ?
How it the permit situation going?
Do you have any comments for the Gen submittal.

Please advise, Regards,

Adrian Rodriguez
Assistant Project Manager
Hinterland Group, Inc.
2051 West Blue Heron Blvd
Riviera Beach, Florida 33404
C : (786) – 768-7252

Kervin Flores-Garcia

From: Chase Dickinson <cdickinson@ecklerengineering.com>
Sent: Friday, December 10, 2021 11:06 AM
To: Adrian Rodriguez
Cc: Chase Rogers; Jay Breig; Kervin Flores-Garcia
Subject: Vac Station No. 1 - Clarification Drawings + Easement
Attachments: VPS No. 1 New Easement.pdf; Drawing Clarifications.pdf

Adrian,

As a follow up to our conversation I am sending you the following:

1. The new easement that includes the space required for the generator. Please submit the current electronically signed and sealed construction drawings with this easement to the Building Department.
2. A revised set of construction drawings (see link below) that includes various minor revisions. Revisions are indicated on each page with a triangle with a number "1" inside and are noted on the revision block at the bottom of each page.
3. A spreadsheet listing all the revisions made to the above referenced revised construction drawings.

As we discussed, Hinterland should review the revised construction drawings and respond with any concerns regarding the scope of work.

Link to revised construction drawings: https://www.dropbox.com/s/cusetzl1cbvlmbh/2021-12-07%20Revised%20Construction%20Set.pdf?dl=0

Feel free to call me to discuss.

Best Regards,

ECKLER ENGINEERING

Chase Dickinson, P.E.
Project Engineer | Eckler Engineering, Inc.
4700 Riverside Dr., Suite 110 | Coral Springs, FL 33067
p 954.510.4700 | **c** 772.215.1930
e cdickinson@ecklerengineering.com

Kervin Flores-Garcia

From: Kervin Flores-Garcia
Sent: Monday, January 17, 2022 2:07 PM
To: Chase Dickinson; Adrian Rodriguez
Subject: RE: Generac Review

Thank you, Chase.
We will look forward on this.

Any additional information feel free to contact me. Have a nice day!

Kervin Flores-Garcia
Project Manager
kflores@hinterlandgroup.com

Hinterland Group, Inc.
2051 W. Blue Heron Blvd.
Riviera Beach, FL 33404
O: 561-640-3503 |F: 561-640-3504
C: 787-452-8268

From: Chase Dickinson <cdickinson@ecklerengineering.com>
Sent: Monday, January 17, 2022 1:18 PM
To: Adrian Rodriguez <arodriguez@hinterlandgroup.com>
Cc: Kervin Flores-Garcia <KFlores@hinterlandgroup.com>
Subject: RE: Generac Review

Adrian,

I have requested this information from the Village.

Best Regards,

Chase Dickinson, P.E.
Project Engineer | Eckler Engineering, Inc.
4700 Riverside Dr., Suite 110 | Coral Springs, FL 33067
p 954.510.4700 | **c** 772.215.1930
e cdickinson@ecklerengineering.com

From: Adrian Rodriguez <arodriguez@hinterlandgroup.com>
Sent: Thursday, January 13, 2022 9:29 AM
To: Chase Dickinson <cdickinson@ecklerengineering.com>
Cc: Kervin Flores-Garcia <KFlores@hinterlandgroup.com>
Subject: RE: Generac Review

Good Morning Chase,

I am starting the permit application and I need the attached information from the owner of the properties before I can submit the amendment and the plans, is this something you can provide for me.

Please advise

Adrian Rodriguez
Assistant Project Manager
Hinterland Group, Inc.
2051 West Blue Heron Blvd
Riviera Beach, Florida 33404
C : (786) – 768-7252

From: Chase Dickinson <cdickinson@ecklerengineering.com>
Sent: Wednesday, January 12, 2022 11:32 AM
To: Adrian Rodriguez <arodriguez@hinterlandgroup.com>
Cc: Chase Rogers <crogers@hinterlandgroup.com>; Kervin Flores-Garcia <KFlores@hinterlandgroup.com>; Daniel Duke <dduke1@hinterlandgroup.com>
Subject: RE: Generac Review

Adrian,

See link below for drawings:

https://www.dropbox.com/sh/omy2xrb59j9a0rq/AABbyMyI0SGHcJVzmPNqgBRua?dl=0

Best Regards,

Chase Dickinson, P.E.
Project Engineer | Eckler Engineering, Inc.
4700 Riverside Dr., Suite 110 | Coral Springs, FL 33067
p 954.510.4700 | **c** 772.215.1930
e cdickinson@ecklerengineering.com

From: Adrian Rodriguez <arodriguez@hinterlandgroup.com>
Sent: Tuesday, January 11, 2022 12:18 PM
To: Chase Dickinson <cdickinson@ecklerengineering.com>
Cc: Chase Rogers <crogers@hinterlandgroup.com>; Kervin Flores-Garcia <KFlores@hinterlandgroup.com>; Daniel Duke <dduke1@hinterlandgroup.com>
Subject: RE: Generac Review

Good Afternoon Chase,

Following up with my email below, we haven't been able to apply for the building permit yet, please let me know when can we get those sign and seal plans.

Adrian Rodriguez
Assistant Project Manager
Hinterland Group, Inc.
2051 West Blue Heron Blvd
Riviera Beach, Florida 33404
C : (786) – 768-7252

From: Adrian Rodriguez
Sent: Friday, January 7, 2022 11:50 AM
To: Chase Dickinson <cdickinson@ecklerengineering.com>
Cc: Chase Rogers <crogers@hinterlandgroup.com>; Kervin Flores-Garcia <KFlores@hinterlandgroup.com>; Daniel Duke <dduke1@hinterlandgroup.com>
Subject: RE: Generac Review

Hello Chase,

Following up to see if you were able to get the Sign and Seal for the new set of plans already, to be able to apply for the building permit.

Please advise.

Adrian Rodriguez
Assistant Project Manager
Hinterland Group, Inc.
2051 West Blue Heron Blvd
Riviera Beach, Florida 33404
C : (786) – 768-7252

From: Chase Dickinson <cdickinson@ecklerengineering.com>
Sent: Thursday, December 23, 2021 1:51 PM
To: Adrian Rodriguez <arodriguez@hinterlandgroup.com>
Cc: Chase Rogers <crogers@hinterlandgroup.com>; Kervin Flores-Garcia <KFlores@hinterlandgroup.com>; Daniel Duke <dduke1@hinterlandgroup.com>
Subject: RE: Generac Review

Adrian,

Understood. I have sent them out to be signed and sealed. I will get them to you as soon as I can.

Best Regards,

Chase Dickinson, P.E.
Project Engineer | Eckler Engineering, Inc.
4700 Riverside Dr., Suite 110 | Coral Springs, FL 33067
p 954.510.4700 | **c** 772.215.1930
e cdickinson@ecklerengineering.com

From: Adrian Rodriguez <arodriguez@hinterlandgroup.com>
Sent: Thursday, December 23, 2021 12:21 PM
To: Chase Dickinson <cdickinson@ecklerengineering.com>

Cc: Chase Rogers <crogers@hinterlandgroup.com>; Kervin Flores-Garcia <KFlores@hinterlandgroup.com>; Daniel Duke <dduke1@hinterlandgroup.com>
Subject: RE: Generac Review

Hello Chase,

For the building permit we prefer to wait until you can get the revise sign and seal drawings, that way we can do everything in one shot.

Best Regards.

Adrian Rodriguez
Assistant Project Manager
Hinterland Group, Inc.
2051 West Blue Heron Blvd
Riviera Beach, Florida 33404
C : (786) – 768-7252

From: Chase Dickinson <cdickinson@ecklerengineering.com>
Sent: Wednesday, December 22, 2021 2:41 PM
To: Chase Rogers <crogers@hinterlandgroup.com>
Cc: Adrian Rodriguez <arodriguez@hinterlandgroup.com>
Subject: Generac Review

Chase,

As a follow up to our conversation yesterday, below is an incomplete and informal list of items that the Generac shop drawing do not meet the specifications.

Also, regarding the Building Department Permit, you have two options with the drawings:

1. Submit the signed and sealed drawings you have now, and we will address the comments that come back.
2. Or wait until I can get revised signed and sealed drawings from our subconsultants prior to submitting. This will probably not happen until the new year.

Informal comments on generator:

a. Submittal does not meet the requirements of Specification Section 16204, 1.02, A and E, 1 & 2
b. Submittal does not meet the requirements of Plans sheet C-03 Enclosure Notes
c. Submittal does not meet the requirements of Plans sheet C-03 Fuel Storage System Notes and Table
d. Submittal does not meet the requirements of Specification Section 16204, 1.03, A, 6, 7, 9, 10
e. Submittal does not meet the requirements of Specification Section 16204, 1.04, A, 4,7,12,13, 14,15,16,17,18
f. Submittal does not meet the requirements of Specification Section 16204, 1.04, B
g. Submittal does not meet the requirements of Specification Section 16204, 1.06, A and B
h. Submittal does not meet the requirements of Specification Section 16204, 1.07, A, 1
i. Submittal does not meet the requirements of Specification Section 16204, 1.07, B
j. Submittal does not meet the requirements of Specification Section 16204, 1.07, C
k. Submittal does not meet the requirements of Specification Section 16204, 1.07, D, 1,4 and 5
l. Submittal does not meet the requirements of Specification Section 16204, 2.01,A,C,D,F,H,I
m.Submittal does not meet the requirements of Specification Section 16204, 2.02,A, D

n. Submittal does not meet the requirements of Specification Section 16204, 2.03,C
o. Submittal does not meet the requirements of Specification Section 16204, 2.04 and Plans sheet C-03
p. Submittal does not meet the requirements of Specification Section 16204, 2.05,A,B,C,D
q. Submittal does not meet the requirements of Specification Section 16204, 2.06, C,D,E
r. Submittal does not meet the requirements of Specification Section 16204, 2.07,A,4; B,C,D,E
s. Submittal does not meet the requirements of Specification Section 16204, 2.08
t. Submittal does not meet the requirements of Specification Section 16204, 2.11, A through Y
u.Submittal does not meet the requirements of Specification Section 16204, 2.13
v.Submittal does not meet the requirements of Specification Section 16204, 3.03, A (match C and D)

1. Confirm that engine jacket water heater is UL recognized per Spec Section 16204, 2.01, E.
2. Provide generator sizing load calculations per Spec Section 16204, 2.01, I.
3. Confirm safe operation at all ranges at 120 degrees Fahrenheit maximum ambient temperature per Spec Section 16204, 2.03.
4. Exhaust silencer shall be hospital grade per Spec Section 16204, 2.05, A.
5. Submittal does not provide information on silencer per Spec Section 16204, 2.05, A through D.
6. Confirm engine cooling system is pretreated by engine manufacturer per Spec Section 16204, 2.03, A.

Best Regards,

ECKLER ENGINEERING

Chase Dickinson, P.E.
Project Engineer | Eckler Engineering, Inc.
4700 Riverside Dr., Suite 110 | Coral Springs, FL 33067
p 954.510.4700 | **c** 772.215.1930
e cdickinson@ecklerengineering.com

Kervin Flores-Garcia

From: Chase Dickinson <cdickinson@ecklerengineering.com>
Sent: Wednesday, January 19, 2022 11:41 AM
To: Adrian Rodriguez
Cc: Kervin Flores-Garcia
Subject: RE: Generac Review

Adrian,

The Village said they don't have a good answer for you. They suggest calling the PBC Permit Assistance Line at 561-233-5119 as ask how Hinterland should fill in this form since this is on the shop owners' property. The Village only has the easements in place. Sorry that this wasn't a great answer.

Best Regards,

Chase Dickinson, P.E.
Project Engineer | Eckler Engineering, Inc.
4700 Riverside Dr., Suite 110 | Coral Springs, FL 33067
p 954.510.4700 | **c** 772.215.1930
e cdickinson@ecklerengineering.com

From: Adrian Rodriguez <arodriguez@hinterlandgroup.com>
Sent: Friday, January 14, 2022 4:47 PM
To: Chase Dickinson <cdickinson@ecklerengineering.com>
Cc: Kervin Flores-Garcia <KFlores@hinterlandgroup.com>
Subject: RE: Generac Review

Hey Chase,

Are you going to be able to help me with this, I want to move forward with the permit.

Please advise.

Adrian Rodriguez
Assistant Project Manager
Hinterland Group, Inc.
2051 West Blue Heron Blvd
Riviera Beach, Florida 33404
C : (786) – 768-7252

FISCAL IMPACT

Funding to support the Vacuum Pump Station No. 1 Improvements Project (Task Order No. 240, Task Order No. 266, and Task Order No. 278) was provided by the Water & Sewer Enterprise Fund:

Allocated/Estimated Project Funding:	***Amount***
FY 2019 Actual Funding - Water & Sewer Enterprise Fund (TO #240, #266, #278):	$ 15,435.00
FY 2020 Actual Funding - Water & Sewer Enterprise Fund (TO #240, #266, #278):	$ 30,682.80
FY 2021 Actual Funding - Water & Sewer Enterprise Fund (TO #240, #266, #278):	$ 10,640.50
FY 2022 Approved Funding - Water & Sewer Enterprise Fund (TO #240, #266, #278):	$433,465.00
FY 2022 Requested Funding - Water & Sewer Enterprise Fund (TO #240, #266, #278):	$ 1,295.75
TOTAL ALLOCATED/APPROVED BUDGET	**$491,519.05**
Expected Project Costs:	***Amount***
Project Costs - Actual Engineering - Water & Sewer Fund (TO #240, #266, #278):	$ 60,029.73
Project Costs - Remaining Engineer - Water & Sewer Fund (TO #240, #266, #278):	$ 10,439.27
Project Award - Construction - Water & Sewer Fund (TO #240, #266, #278):	$472,600.00
Change Order No. 1 - Construction - Water & Sewer Fund (TO #240, #266, #278):	$ -51,549.95
TOTAL REVISED PROJECT COSTS	**$491,519.05**

SECTION 00520
AGREEMENT
BETWEEN OWNER AND CONTRACTOR
FOR CONSTRUCTION CONTRACT (STIPULATED PRICE)

THIS AGREEMENT is by and between Village of Palm Springs ("Owner") and Hinterland Group, Inc. ("Contractor").

Owner and Contractor hereby agree as follows:

ARTICLE 1 – WORK

1.01 Contractor shall complete all Work as specified or indicated in the Contract Documents. The Work is generally described as follows: The Project consists of furnishing all labor, equipment and material for the Vacuum Pump Station No. 1 Improvements as described by the Drawings and Specifications. Generally, the work includes demolition, construction of new access structure, yard piping relocation, removal and replacement of vacuum pumps, new standby generator and, and all other incidentals as indicated by the drawings and specifications or as required to properly complete the project as planned.

ARTICLE 2 – THE PROJECT

2.01 The Project, of which the Work under the Contract Documents is a part, is generally described as follows: **Vacuum Pump Station No. 1 Improvements.**

ARTICLE 3 – ENGINEER

3.01 The part of the Project that pertains to the Work has been designed by Eckler Engineering, Inc.

3.02 The Owner has retained Eckler Engineering, Inc. ("Engineer") to act as Owner's representative, assume all duties and responsibilities, and have the rights and authority assigned to Engineer in the Contract Documents in connection with the completion of the Work in accordance with the Contract Documents.

ARTICLE 4 – CONTRACT TIMES

4.01 *Time of the Essence*

A. All time limits for Milestones, if any, Substantial Completion, and completion and readiness for final payment as stated in the Contract Documents are of the essence of the Contract.

4.02 *Contract Times: Days*

A. The Work will be substantially completed within 210 days after the date when the Contract Times commence to run as provided in Paragraph 4.01 of the General Conditions, and completed and ready for final payment in accordance with Paragraph 15.06 of the General Conditions within 240 days after the date when the Contract Times commence to run.

4.03 *Liquidated Damages*

A. Contractor and Owner recognize that time is of the essence as stated in Paragraph 4.01 above and that Owner will suffer financial and other losses if the Work is not completed

and Milestones not achieved within the times specified in Paragraph 4.02 above, plus any extensions thereof allowed in accordance with the Contract. The parties also recognize the delays, expense, and difficulties involved in proving in a legal or arbitration proceeding the actual loss suffered by Owner if the Work is not completed on time. Accordingly, instead of requiring any such proof, Owner and Contractor agree that as liquidated damages for delay (but not as a penalty):

1. Substantial Completion: Contractor shall pay Owner $500.00 for each day that expires after the time (as duly adjusted pursuant to the Contract) specified in Paragraph 4.02.A above for Substantial Completion until the Work is substantially complete.
2. Completion of Remaining Work: After Substantial Completion, if Contractor shall neglect, refuse, or fail to complete the remaining Work within the Contract Times (as duly adjusted pursuant to the Contract) for completion and readiness for final payment, Contractor shall pay Owner $500.00 for each day that expires after such time until the Work is completed and ready for final payment.
3. Liquidated damages for failing to timely attain Substantial Completion and final completion are not additive and will not be imposed concurrently.

4.04 *Special Damages*

A. In addition to the amount provided for liquidated damages, Contractor shall reimburse Owner (1) for any fines or penalties imposed on Owner as a direct result of the Contractor's failure to attain Substantial Completion according to the Contract Times.

ARTICLE 5 – CONTRACT PRICE

5.01 Owner shall pay Contractor for completion of the Work in accordance with the Contract Documents the amounts that follow, subject to adjustment under the Contract:

A. For all Work other than Unit Price Work, a lump sum of: $472,600.00

All specific cash allowances are included in the above price in accordance with Paragraph 13.02 of the General Conditions.

B. For all Unit Price Work, an amount equal to the sum of the extended prices (established for each separately identified item of Unit Price Work by multiplying the unit price times the actual quantity of that item):

Unit Price Work					
Item No.	**Description**	**Unit**	**Estimated Quantity**	**Unit Price**	**Extended Price**
	Not Applicable				
Total of all Extended Prices for Unit Price Work (subject to final adjustment based on actual quantities)					$ N/A

The extended prices for Unit Price Work set forth as of the Effective Date of the Contract are based on estimated quantities. As provided in Paragraph 13.03 of the General Conditions, estimated quantities are not guaranteed, and determinations of actual quantities and classifications are to be made by Engineer.

C. Total of Lump Sum Amount and Unit Price Work (subject to final Unit Price adjustment) $472,600.00

D. For all Work, at the prices stated in Contractor's Bid, attached hereto as an exhibit.

ARTICLE 6 – PAYMENT PROCEDURES

6.01 *Submittal and Processing of Payments*

A. Contractor shall submit Applications for Payment in accordance with Article 15 of the General Conditions. Applications for Payment will be processed by Engineer as provided in the General Conditions.

6.02 *Progress Payments; Retainage*

A. Owner shall make progress payments on account of the Contract Price on the basis of Contractor's Applications for Payment on or about the 20th day of each month during performance of the Work as provided in Paragraph 6.02.A.1 below, provided that such Applications for Payment have been submitted in a timely manner and otherwise meet the requirements of the Contract. All such payments will be measured by the Schedule of Values established as provided in the General Conditions (and in the case of Unit Price Work based on the number of units completed) or, in the event there is no Schedule of Values, as provided elsewhere in the Contract.

1. Prior to Substantial Completion, progress payments will be made in accordance with Florida Statute 255.078 but, in each case, less the aggregate of payments previously made and less such amounts as Owner may withhold, including but not limited to liquidated damages, in accordance with the Contract

B. Upon Substantial Completion, Owner shall pay an amount sufficient to increase total payments to Contractor to 100 percent of the Work completed, less such amounts set off by Owner pursuant to Paragraph 15.01.E of the General Conditions, and less 200 percent of Engineer's estimate of the value of Work to be completed or corrected as shown on the punch list of items to be completed or corrected prior to final payment.

6.03 *Final Payment*

A. Upon final completion and acceptance of the Work in accordance with Paragraph 15.06 of the General Conditions, Owner shall pay the remainder of the Contract Price as recommended by Engineer as provided in said Paragraph 15.06.

ARTICLE 7 – INTEREST

7.01 All amounts not paid when due shall bear interest at the rate of 1 percent per annum.

ARTICLE 8 – CONTRACTOR'S REPRESENTATIONS

8.01 In order to induce Owner to enter into this Contract, Contractor makes the following representations:

A. Contractor has examined and carefully studied the Contract Documents, and any data and reference items identified in the Contract Documents.

B. Contractor has visited the Site, conducted a thorough, alert visual examination of the Site and adjacent areas, and become familiar with and is satisfied as to the general, local, and Site conditions that may affect cost, progress, and performance of the Work.

C. Contractor is familiar with and is satisfied as to all Laws and Regulations that may affect cost, progress, and performance of the Work.

D. Contractor has carefully studied all: (1) reports of explorations and tests of subsurface conditions at or adjacent to the Site and all drawings of physical conditions relating to existing surface or subsurface structures at the Site that have been identified in the Supplementary Conditions, especially with respect to Technical Data in such reports and drawings, and (2) reports and drawings relating to Hazardous Environmental Conditions, if any, at or adjacent to the Site that have been identified in the Supplementary Conditions, especially with respect to Technical Data in such reports and drawings.

E. Contractor has considered the information known to Contractor itself; information commonly known to contractors doing business in the locality of the Site; information and observations obtained from visits to the Site; the Contract Documents; and the Site-related reports and drawings identified in the Contract Documents, with respect to the effect of such information, observations, and documents on (1) the cost, progress, and performance of the Work; (2) the means, methods, techniques, sequences, and procedures of construction to be employed by Contractor; and (3) Contractor's safety precautions and programs.

F. Based on the information and observations referred to in the preceding paragraph, Contractor agrees that no further examinations, investigations, explorations, tests, studies, or data are necessary for the performance of the Work at the Contract Price, within the Contract Times, and in accordance with the other terms and conditions of the Contract.

G. Contractor is aware of the general nature of work to be performed by Owner and others at the Site that relates to the Work as indicated in the Contract Documents.

H. Contractor has given Engineer written notice of all conflicts, errors, ambiguities, or discrepancies that Contractor has discovered in the Contract Documents, and the written resolution thereof by Engineer is acceptable to Contractor.

I. The Contract Documents are generally sufficient to indicate and convey understanding of all terms and conditions for performance and furnishing of the Work.

J. Contractor's entry into this Contract constitutes an incontrovertible representation by Contractor that without exception all prices in the Agreement are premised upon performing and furnishing the Work required by the Contract Documents.

ARTICLE 9 – CONTRACT DOCUMENTS

9.01 *Contents*

A. The Contract Documents consist of the following:

1. This Agreement (pages 1 to11, inclusive).
2. Performance bond (pages 1 to 3, inclusive).
3. Payment bond (pages 1 to3, inclusive).
4. Other bonds.
   a. [redacted] (pages [redacted] to [redacted], inclusive).

b. [redacted] (pages [redacted] to [redacted], inclusive).

c. [redacted] (pages [redacted] to [redacted], inclusive).

5. General Conditions (pages 1 to 65, inclusive).

6. Supplementary Conditions (pages 1 to 10, inclusive).

7. Specifications as listed in the table of contents of the Project Manual, dated April 1, 2021.

8. Drawings (not attached but incorporated by reference) consisting of 39 sheets with each sheet bearing the following general title: Vacuum Pump Station No. 1 Improvements, dated April 1, 2021.

9. Addenda (numbers [redacted] to [redacted], inclusive).

10. Exhibits to this Agreement (enumerated as follows):

    a. Contractor's Bid (pages [redacted] to [redacted], inclusive).

11. The following which may be delivered or issued on or after the Effective Date of the Contract and are not attached hereto:

    a. Notice to Proceed.

    b. Work Change Directives.

    c. Change Orders.

    d. Field Orders.

B. The documents listed in Paragraph 9.01.A are attached to this Agreement (except as expressly noted otherwise above).

C. There are no Contract Documents other than those listed above in this Article 9.

D. The Contract Documents may only be amended, modified, or supplemented as provided in the General Conditions.

ARTICLE 10 – MISCELLANEOUS

10.01 *Terms*

A. Terms used in this Agreement will have the meanings stated in the General Conditions and the Supplementary Conditions.

10.02 *Assignment of Contract*

A. Unless expressly agreed to elsewhere in the Contract, no assignment by a party hereto of any rights under or interests in the Contract will be binding on another party hereto without the written consent of the party sought to be bound; and, specifically but without limitation, money that may become due and money that is due may not be assigned without such consent (except to the extent that the effect of this restriction may be limited by law), and unless specifically stated to the contrary in any written consent to an assignment, no assignment will release or discharge the assignor from any duty or responsibility under the Contract Documents.

10.03 *Successors and Assigns*

A. Owner and Contractor each binds itself, its successors, assigns, and legal representatives to the other party hereto, its successors, assigns, and legal representatives in respect to all covenants, agreements, and obligations contained in the Contract Documents.

10.04 *Severability*

A. Any provision or part of the Contract Documents held to be void or unenforceable under any Law or Regulation shall be deemed stricken, and all remaining provisions shall continue to be valid and binding upon Owner and Contractor, who agree that the Contract Documents shall be reformed to replace such stricken provision or part thereof with a valid and enforceable provision that comes as close as possible to expressing the intention of the stricken provision.

10.05 *Contractor's Certifications*

A. Contractor certifies that it has not engaged in corrupt, fraudulent, collusive, or coercive practices in competing for or in executing the Contract. For the purposes of this Paragraph 10.05:

1. "corrupt practice" means the offering, giving, receiving, or soliciting of any thing of value likely to influence the action of a public official in the bidding process or in the Contract execution;

2. "fraudulent practice" means an intentional misrepresentation of facts made (a) to influence the bidding process or the execution of the Contract to the detriment of Owner, (b) to establish Bid or Contract prices at artificial non-competitive levels, or (c) to deprive Owner of the benefits of free and open competition;

3. "collusive practice" means a scheme or arrangement between two or more Bidders, with or without the knowledge of Owner, a purpose of which is to establish Bid prices at artificial, non-competitive levels; and

4. "coercive practice" means harming or threatening to harm, directly or indirectly, persons or their property to influence their participation in the bidding process or affect the execution of the Contract.

10.06 *Indemnity*

A. The parties recognize that the CONTRACTOR is an independent contractor. The CONTRACTOR agrees to assume liability for and indemnify, hold harmless, and defend the VILLAGE, its council members, mayor, officers, employees, agents, and attorneys of, from, and against all liability and expense, including reasonable attorney's fees, in connection with any and all claims, demands, damages, actions, causes of action, and suits in equity of whatever kind or nature, including claims for personal injury, property damage, equitable relief, or loss of use, to the extent caused by the negligence, recklessness, or intentionally wrongful conduct of the CONTRACTOR, its agents, officers, Contractors, subcontractors, employees, or anyone else utilized by the CONTRACTOR in the performance of this Contract. The CONTRACTOR's liability hereunder shall include all attorney's fees and costs incurred by the VILLAGE in the enforcement of this indemnification provision. This includes claims made by the employees of the CONTRACTOR against the VILLAGE and the CONTRACTOR hereby waives its entitlement, if any, to immunity under Section 440.11, Florida Statutes. The obligations contained in this provision shall survive termination of this Contract and shall not be limited by the amount of any insurance required to be obtained or maintained under this Contract.

B. Subject to the limitations set forth in this Section, CONTRACTOR shall assume control of the defense of any claim asserted by a third party against the VILLAGE and, in connection with such defense, shall appoint lead counsel, in each case at the CONTRACTOR's expense. The VILLAGE shall have the right, at its option, to participate in the defense of any third party claim, without relieving CONTRACTOR of any of its obligations hereunder. If the CONTRACTOR assumes control of the defense of any third party claim in accordance with this paragraph, the CONTRACTOR shall obtain the prior written consent of the VILLAGE before entering into any settlement of such claim. Notwithstanding anything to the contrary in this Section, the CONTRACTOR shall not assume or maintain control of the defense of any third party claim, but shall pay the fees of counsel retained by the VILLAGE and all expenses, including experts' fees, if (i) an adverse determination with respect to the third party claim would, in the good faith judgment of the VILLAGE, be detrimental in any material respect to the VILLAGE's reputation; (ii) the third party claim seeks an injunction or equitable relief against the VILLAGE; or (iii) the CONTRACTOR has failed or is failing to prosecute or defend vigorously the third party claim. Each party shall cooperate, and cause its agents to cooperate, in the defense or prosecution of any third party claim and shall furnish or cause to be furnished such records and information, and attend such conferences, discovery proceedings, hearings, trials, or appeals, as may be reasonably requested in connection therewith.

C. It is the specific intent of the parties hereto that the foregoing indemnification complies with Section 725.06, Florida Statutes, as amended. CONTRACTOR expressly agrees that it will not claim, and waives any claim, that this indemnification violates Section 725.06, Florida Statues. Nothing contained in the foregoing indemnification shall be construed as a waiver of any immunity or limitation of liability the VILLAGE may have under the doctrine of sovereign immunity or Section 768.28, Florida Statutes.

10.07 *Governing Law and Remedies*

A. The validity of this Agreement and of any of its terms or provisions, as well as the rights and duties of the parties hereunder, shall be governed by the laws of the State of Florida and venue for any and all disputes related to or arising from this Agreement shall be in Palm Beach County, Florida.

B. No remedy herein conferred upon any party is intended to be exclusive of any other remedy, and each and every such remedy shall be cumulative and shall be in addition to every other remedy given hereunder or now or hereafter existing at law or in equity or by statute or otherwise. No single or partial exercise by any party of any right, power, or remedy hereunder shall preclude any other or further exercise thereof.

10.08 *Office of the Inspector General*

A. Palm Beach County has established the Office of the Inspector General, which is authorized and empowered to review past, present, and proposed County programs, contracts, transactions, accounts and records. The Inspector General (IG) has the power to subpoena witnesses, administer oaths, require the production of records, and monitor existing projects and programs. The Inspector General may, on a random basis, perform audits on all Village contracts.

10.09 *Public Records*

A. The CONTRACTOR shall comply with Florida's Public Records Laws, Chapter 119, Florida Statutes, and, if it is acting on behalf of the VILLAGE as provided under section 119.011(2), the CONTRACTOR specifically agrees to:

1. Keep and maintain public records required by the VILLAGE to perform the services under this Agreement.

2. Upon request from the VILLAGE's custodian of public records, provide the VILLAGE with a copy of the requested records or allow the records to be inspected or copied within a reasonable tie at a cost that does not exceed the cost provided in this Chapter 119, Florida Statutes, or as otherwise provided by law.

3. Ensure that said public records that are exempt or confidential and exempt from public records disclosure requirements are not disclosed except as authorized by law for the duration of the Agreement term and following completion of the Agreement, if the CONTRACTOR does not transfer the records to the VILLAGE.

4. Upon the completion of the Agreement, transfer, at no cost, to the VILLAGE all public records in possession of the CONTRACTOR or keep and maintain public records required by the VILLAGE to perform the services. If the CONTRACTOR transfers all public records to the VILLAGE upon completion of the Agreement, the CONTRACTOR shall destroy any duplicate public records that are exempt or confidential and exempt from public records disclosure requirements. If the CONTRACTOR keeps and maintains public records upon completion of the Agreement, the CONTRACTOR shall meet all applicable requirements for retaining public records. All records stored electronically must be provided to the VILLAGE, upon request from the VILLAGE's custodian of public records, in a format that is compatible with the information technology systems of the Village.

IF THE CONTRACTOR HAS QUESTIONS REGARDING THE APPLICATION OF CHAPTER 119, FLORIDA STATUTES, TO THE CONSULTANT'S DUTY TO PROVIDE PUBLIC RECORDS RELATING TO THIS CONTRACT, CONTACT THE CUSTODIAN OF PUBLIC RECORDS OR DESIGNEE AT 561-434-5084, kwynn@vpsfl.org, OR BY MAIL AT VILLAGE OF PALM SPRINGS, 226 CYPRESS LANE, PALM SPRINGS, FL 33461.

10.10 *Insurance*

A. The limits of liability for insurance required by Paragraph 6.03 of the General Conditions shall provide coverage for not less that the following amounts or greater where required by Law and Regulations:

1. Workers' Compensation, and related coverages under Paragraphs 6.03.A.1 and A.2 of the General Conditions:

a. State	Statutory
b. Applicable Federal	Statutory
c. Employer Liability:	
Bodily injury, each accident	$1,000,000
Bodily injury by disease, each employee	$500,000
Bodily injury/disease aggregate	$1,000,000
Foreign voluntary worker compensation	Statutory

2. Contractor's Commercial General Liability under Paragraphs 6.03.B and 6.03.C of the General Conditions:

a.	General Aggregate	$2,000,000
b.	Products – Completed Operations Aggregate	$2,000,000
c.	Personal and Advertising Injury	$1,000,000
d.	Each Occurrence (Bodily Injury and Property Damage)	$1,000,000

3. Automobile Liability under paragraph 6.03.D of the General Conditions:

a.	Bodily Injury:	
	Each Person	$500,000
	Each Accident	$1,000,000
b.	Property Damage:	
	Each Incident	$1,000,000

4. Umbrella of Excess Liability under paragraph 6.03.E of the General Conditions:

a.	Excess or Umbrella Liability	
	1) General Aggregate	$5,000,000
	2) Each Occurrence	$1,000,000

5. Contractor's Pollution Liability under paragraph 6.03.F of the General Conditions:

a.	Contractor's Pollution Liability	
	1) General Aggregate	$2,000,000
	2) Each Occurrence	$1,000,000

6. Additional Insureds include the respective officers, partners, directors, employees, agents, consultants, and subconsultants of the following firms and municipal government(s):

   a. Village of Palm Springs

10.11 *Audit By Village*

A. The CONTRACTOR shall permit the VILLAGE, or any authorized representatives of the VILLAGE, at all reasonable times, access to and the right to examine all records, books, papers or documents related to the CONTRACTOR's performance under this Agreement including, but not limited to, expenses for sub-contractors, agents or assistants, direct and indirect charges for work performed and detailed documentation for all such work performed or to be performed under this Agreement.

10.12 *Copies of Data/Documents*

A. Copies or original documents prepared by the CONTRACTOR in relation to work associated with this Agreement shall be provided to the VILLAGE. Data collected, stored, and/or provided shall be in a form acceptable to the VILLAGE and agreed upon by the VILLAGE.

10.13 *Ownership*

A. Each and every report, draft, work product, map, record, and other document reproduced, prepared, or caused to be prepared by the CONTRACTOR pursuant to or in connection with this Agreement shall be the exclusive property of the VILLAGE.

10.14 *Limitations of Liability*

A. Under no circumstances shall either party be liable to the other for any consequential, incidental, special, punitive, or any other form of indirect or non-compensatory damages.

10.15 *Enforcement Costs*

A. All parties shall be responsible for their own attorneys' fees, court costs and expenses if any legal action or other proceeding is brought for any dispute, disagreement, or issue of construction or interpretation arising hereunder whether relating to the Agreement's execution, validity, the obligations provided therein, or performance of this Agreement, or because of an alleged breach, default or misrepresentation in connection with any provisions of this Agreement.

10.16 *Copyrights and/or Patent Rights*

A. CONTRACTOR warrants that there has been no violation of copyrights and/or patent rights in the manufacturing, producing or selling of the goods, shipped or ordered, as a result of this Agreement and the CONTRACTOR agrees to hold the Village harmless from any and all liability, loss, or expense occasioned by any such violation.

10.17 *Protection of Property*

A. The CONTRACTOR shall at all times guard against damage or loss to the property of the VILLAGE or of other vendors or contractors and shall be held responsible for replacing or repairing any such loss or damage. The VILLAGE may withhold payment or make such deductions as deemed necessary to insure reimbursement or replacement for loss or damage to property through negligence of the successful CONTRACTOR or its agents. The CONTRACTOR shall be responsible to safeguard all of their property such as tools and equipment while on site. The VILLAGE will not be held responsible for any loss of CONTRACTOR property due to theft or vandalism.

10.18 *Damage to Persons or Property*

A. The responsibility for all damage to person or property arising out of or on account of Scope of Work done under this Contract shall rest upon the CONTRACTOR.

10.19 *Discrimination*

A. The CONTRACTOR warrants and represents that all of its employees are treated equally during employment without regard to race, color, religion, disability, sex, age, national origin, ancestry, political affiliation, marital status, handicap, or sexual orientation. Further, CONTRACTOR shall not discriminate or permit discrimination against any employee or an applicant for employment on the basis of race, color, sex, religion, political affiliation, natural origin, ancestry, marital status, sexual orientation or handicap.

10.20 *Construction Defects*

A. PURSUANT TO SECTION 558.005, FLORIDA STATUTES, ANY CLAIMS FOR CONSTRUCTION DEFECTS ARE NOT SUBJECT TO THE NOTICE AND CURE PROVISIONS OF CHAPTER 558, FLORIDA STATUTES.

10.21 *Public Entity Crimes*

A. Contractor acknowledges and agrees that a person or affiliate who has been placed on the convicted vendor list following a conviction for a public entity crime may not submit a bid, proposal, or reply on a contract to provide any goods or services to a public entity; may not submit a bid, proposal, or reply on a contract with a public entity for the construction or repair of a public building or public work; may not submit bids, proposals, or replies on leases of real property to a public entity; may not be awarded or perform work as a contractor, supplier or sub-contractor under a contract with any public entity; and may not transact business with any public entity in excess of the threshold amount provided in Section 287.017, Florida Statues, for CATEGORY TWO for a period of 36 months following the date of being placed on the

convicted vendor list. The Contractor will advise the Village immediately if it becomes aware of any violation of this statute.

10.22 *Scrutinized Companies*

A. Contractor certifies that it and its subcontractors are not on the Scrutinized Companies that Boycott Israel List and are not engaged in the boycott of Israel. Pursuant to section 287.135, Florida Statutes, the City may immediately terminate this Agreement at its sole option if the Contractor or any of its subcontractors are found to have submitted a false certification; or if the Contractor or any of its subcontractors, are placed on the Scrutinized Companies that Boycott Israel List or is engaged in the boycott of Israel during the term of this Agreement.

B. If this Agreement is for one million dollars or more, the Contractor certifies that it and its subcontractors are also not on the Scrutinized Companies with Activities in Sudan List, Scrutinized Companies with Activities in the Iran Petroleum Energy Sector List, or engaged in business operations in Cuba or Syria as identified in Section 287.135, Florida Statutes. Pursuant to Section 287.135, the City may immediately terminate this Agreement at its sole option if the Contractor, or any of its subcontractors are found to have submitted a false certification; or if the Contractor or any of its subcontractors are placed on the Scrutinized Companies with Activities in Sudan List, or Scrutinized Companies with Activities in the Iran Petroleum Energy Sector List, or are or have been engaged with business operations in Cuba or Syria during the term of this Agreement.

C. The Contractor agrees to observe the above requirements for applicable subcontracts entered into for the performance of work under this Agreement.

D. The Contractor agrees that the certifications in this section shall be effective and relied upon by the City for the term of this Agreement, including any and all renewals.

E. The Contractor agrees that if it or any of its subcontractors' status changes in regards to any certification herein, the Contractor shall immediately notify the City of the same.

F. As provided in Subsection 287.135(8), Florida Statutes, if federal law ceases to authorize the above-stated contracting prohibitions then they shall become inoperative.

10.23 *E-Verify*

A. Pursuant to Section 448.095(2), Florida Statutes, beginning on January 1, 2021, the CONTRACTOR shall:

1. Register with and use the E-Verify system to verify the work authorization status of all newly hired employees and require all Subcontractors (providing services or receiving funding under this Agreement) to register with and use the E-Verify system to verify the work authorization status of all the Subcontractors' newly hired employees;

2. Secure an affidavit from all Subcontractors (providing services or receiving funding under this Agreement) stating that the Subcontractor does not employ, contract with, or subcontract with an "unauthorized alien" as defined in Section 448.095(1)(k), Florida Statutes;

3. Maintain copies of all Subcontractor affidavits for the duration of this Agreement and provide the same to the Owner upon request;

4. Comply fully, and ensure all of its Subcontractors comply fully, with Section 448.095, Florida Statutes;

5. Be aware that a violation of Section 448.09, Florida Statutes (Unauthorized aliens; employment prohibited) shall be grounds for termination of this Agreement; and,

6. Be aware that if the Owner terminates this Agreement under Section 448.095(2)(c), Florida Statutes, the Contractor may not be awarded a contract for at least 1 year after the date on which the Agreement is terminated and will be liable for any additional costs incurred by the Village as a result of the termination of the Agreement.

IN WITNESS WHEREOF, Owner and Contractor have signed this Agreement.

This Agreement will be effective on 8/12/21 (which is the Effective Date of the Contract).

VILLAGE:

By: _____

Title: Mayor

Attest: _____

Title: Village Clerk

Approved as to Form: _____

Title: Village Attorney

CONTRACTOR: Hinterland Group Inc.

By: _____

Title: President

(Seal)

Attest: _____

Title: Notary Public

Notary Public State of Florida
Julie Gwinner
My Commission HH 097126
Expires 05/07/2025

Address for giving notices:

226 Cypress Lane

Palm Springs FL, 33461

Address for giving notices:

2051 W. Blue Heron Blvd

Riviera Beach, FL 33404

License No.: _____
(where applicable)

Village of Palm Springs

Executive Brief

AGENDA DATE: June 9, 2022

DEPARTMENT: Parks & Recreation

ITEM #3: Approve Hurricane Debris Management and Support Services Agreement - Piggyback - Thompson Consulting Services, LLC

SUMMARY: The Village has a need to select a vendor to provide disaster debris management and support services in the event of a natural disaster. To ensure that the Village can properly monitor the activities of the debris removal contractors to receive the maximum reimbursement from the Florida Emergency Management (FEMA) and the State of Florida, the staff is recommending that the Village access/utilize the Palm Beach County Solid Waste Authority's (SWA) contract award to Thompson Consulting Services, LLC. This selection by the Solid Waste Authority was completed through a competitive bid process - Request for Proposal Disaster Debris Management and Support Services (RFP No. 22-202 DL - May 8, 2022).

If approved, the Village would access/utilize the SWA's contract to obtain debris removal monitoring services for the following price:

- Thompson Consulting Services, LLC $36.00 per hour

Note: Thompson Consulting Services, LLC has entered into a three-year contract with the Solid Waste Authority and meets the federal procurement standards to ensure FEMA compliance to maximize eligible Hurricane-related expense reimbursement for the Village.

If approved, the Village would accept Thompson Consulting Services, LLC's pricing by piggybacking the Palm Beach County Solid Waste Authority's contract including all conditions, terms, and pricing therein. The term of the contract is set to expire on May 7, 2025.

The Village's Purchasing Code, Section 58-9, Accessing contracts of other government agencies, provides that the Village may award a contract by piggybacking or accessing the goods and/or services from any State of Florida contract; contracts of any Florida political subdivision; or from any other governmental entity (other than the Federal government); provided that the same or substantially similar goods and/or services were competitively solicited.

The proposed agreement was prepared by the Village Attorney and reviewed by the Public Works Director and the Finance Director.

FISCAL IMPACT:

Funding to support a natural disaster/storm event is available within the Village's Reserves and will be requested to be reimbursed by the Federal Emergency Management Agency (FEMA) following a federally declared disaster/storm event.

ATTACHMENTS:

1. Proposed Agreement with Thompson Consulting Services, LLC (Piggyback SWA)
2. SWA - RFP for Disaster Debris Management and Support Services - Addendum #1
3. SWA - Contract Award to Thompson Consulting Services, LLC
4. SWA - RFP for Disaster Debris Management and Support Services (RFP No. 22-202DL)

AGREEMENT FOR DISASTER DEBRIS MANAGEMENT SERVICES

This Agreement for disaster debris management and support services ("Agreement" hereafter) is made as of the _____ day of _____, 2022, by and between the **Village of Palm Springs**, 226 Cypress Lane, Palm Springs, Florida 33461-1699, a municipal corporation organized and existing under the laws of the State of Florida, hereinafter referred to as the VILLAGE, and **Thompson Consulting Services, LLC**, 2601 Maitland Center Parkway, Maitland, FL 32751, a company authorized to do business in the State of Florida, hereinafter referred to as the CONTRACTOR.

RECITALS

WHEREAS, the VILLAGE is in need of a contractor to provide the VILLAGE with disaster debris management and support services; and,

WHEREAS, the Solid Waste Authority of Palm Beach County through its competitive selection process awarded a Contract for disaster debris management and support services (22-201/DL) ("SWA Contract" hereafter) to the CONTRACTOR for substantially the same services sought by the VILLAGE; and,

WHEREAS, the VILLAGE requested, and the CONTRACTOR has executed this Agreement with the VILLAGE for disaster debris management and support services based on the pricing and terms and conditions of the SWA Contract; and,

WHEREAS, the VILLAGE desires to accept CONTRACTOR's pricing by incorporating the SWA Contract including all terms, conditions, and pricing therein into this Agreement.

NOW THEREFORE, in consideration of the mutual promises set forth herein, the receipt and sufficiency of which are hereby acknowledged, the parties hereto agree as follows:

1. Recitals. The parties agree that the recitals set forth above are true and correct and are fully incorporated herein by reference.

2. SWA Contract. The SWA Contract with the CONTRACTOR is hereby expressly made a part of this Agreement as fully as if set forth at length herein. The VILLAGE shall have all rights, obligations and remedies authorized to the Solid Waste Authority of Palm Beach County under the SWA Contract and all associated and applicable Contract Documents as defined therein.

3. Agreement. In accordance with the terms and conditions in the SWA Contract and pricing therein, the CONTRACTOR shall provide disaster debris management and support services as requested by the VILLAGE.

4. Contract Documents and Conflict of Terms and Conditions. The Contract Documents for this Agreement are compromised of the following:

A. All written modifications and amendments hereto;
B. This Agreement;
C. SWA Contract (including the RFP, Contractors Proposal and Contract).

The Contract Documents of this Agreement are intended to be complementary and interpreted in harmony so as to avoid conflict with the words and phrases interpreted in a manner consistent with managing debris removal and industry standards. In the event of any inconsistency, conflict, or ambiguity between or among the Contract Documents of this Agreement, the Contract Documents of this Agreement shall take precedence in the following order:

A. All written modifications and amendments hereto;
B. This Agreement;
C. The SWA Contract.

5. Compensation to Contractor. Payments by the VILLAGE to the CONTRACTOR under this Agreement shall not exceed the amount of compensation, on the unit basis, as set forth under the SWA Contract. CONTRACTOR waives consequential or incidental damages for claims, disputes or other matters in question arising out of or relating to this Agreement.

6. Miscellaneous Provisions.

6.1 The VILLAGE and CONTRACTOR each bind itself, its partners, its successors, assigns and legal representatives to the other party hereto, its partners, successors, assigns and legal representatives in respect of all covenants, agreements and obligations contained in the Contract Documents.

6.2 CONTRACTOR shall maintain the insurance as required in SWA Contract applicable to the goods and services being delivered hereunder. Said insurance will name the VILLAGE as an additional insured.

6.3 Headings and References & Exhibits: The headings contained in this Agreement are inserted for convenience of reference only and shall not be a part or control or

affect the meaning hereof. All references herein to Exhibits are to the exhibits hereto, each of which shall be incorporated into and deemed to be a part of this Agreement.

6.4 Counterparts: This Contract may be executed in two or more counterparts, each of which shall be deemed to be an original, but all of which shall be deemed to be an original, but each of which together shall constitute one and the same instrument.

6.5 Entire Agreement; Amendment and Waiver: This Agreement (together with the Exhibits hereto) supersedes any and all prior negotiations and oral or written agreements heretofore made relating to the subject matter hereof and, except for written agreements, if any, executed and delivered simultaneously with or subsequent to the date of this Agreement, constitutes the entire agreement of the parties relating to the subject matter hereof. This Agreement may not be altered or amended except by a writing signed by the parties hereto. No waiver of any of the terms or conditions of this Agreement shall be effective unless in writing and executed by the party to be changed therewith. No waiver of any condition or of the breach of any term, covenant, representation, warranty, or other provision hereof shall be deemed to be construed as a further or continuing waiver of any such condition or breach or a waiver of any other condition or of any breach of any other term, covenant, representation, warranty or other provision contained in this Agreement.

6.6 Successors and Assigns: This Agreement shall be binding upon and shall inure to the benefit of the parties hereto and their respective successors and assigns.

6.7 Governing Law; Consent to Jurisdiction: This Agreement shall be governed by and construed and interpreted in accordance with the laws of the State of Florida. Each of the parties hereto (a) irrevocably submit itself to the exclusive jurisdiction of the Fifteenth Judicial Circuit Court in and for Palm Beach County, Florida for state actions and jurisdiction of the United States District Court for the Southern District of Florida, Palm Beach Division, for the purposes of any suit, action or other proceeding arising out of, or relating to, this Agreement; (b) waives and agrees not to assert against any party hereto, by way of motion, as a defense of otherwise, in any suit, action or other proceeding, any claim that it is not personally subject to the jurisdiction of the above-named courts for any reason whatsoever; and (ii) to the extent permitted by applicable law, any claim that such suit, action or proceeding by any part hereto is brought in an inconvenient forum or that the venue

of such suit, action or proceeding is improper or that this Agreement or the subject matter hereof may not be enforced in or by such courts.

6.8 Third Party Beneficiary rights: This Agreement shall create no rights or claims whatsoever in any person other than a party herein.

6.9 Severability: If any one or more of the provisions of the Agreement shall be held to be invalid, illegal or unenforceable in any respect, the validity, legality and enforceability of the remaining provisions hereof shall not in any way be affected or impaired thereby.

6.10 Effective date, term and renewal: The effective date of this Agreement is the date the Agreement is approved by the Village Council. The term of this Agreement shall be for an initial term to mirror the SWA Contract term which shall expire on May 7, 2025, unless terminated sooner. The SWA Contract is subject to a one year, renewal and if renewed the VILLAGE also has the right to renew this Agreement for a one year period.

6.11 Public Records: Public Records: CONTRACTOR shall comply with Florida's Public Records Act, Chapter 119, Florida Statutes, and, if determined to be acting on behalf of the VILLAGE as provided under section 119.011(2), Florida Statutes, specifically agrees to:

(a) Keep and maintain public records required by the VILLAGE to perform the service.

(b) Upon request from the VILLAGE's custodian of public records or designee, provide the VILLAGE with a copy of the requested records or allow the records to be inspected or copied within a reasonable time at a cost that does not exceed the cost provided in Chapter 119, Florida Statutes, or as otherwise provided by law.

(c) Ensure that public records that are exempt or confidential and exempt from public records disclosure requirements are not disclosed except as authorized by law for the duration of this Agreement and following completion of this Agreement if the CONTRACTOR does not transfer the records to the VILLAGE.

(d) Upon completion of this Agreement, transfer, at no cost, to the VILLAGE all public records in possession of the CONTRACTOR or keep and maintain public records required by the VILLAGE to perform the service. If the CONTRACTOR transfers all public records to the VILLAGE upon completion of the Agreement, the CONTRACTOR shall destroy any duplicate public records that are exempt or confidential and exempt from public records disclosure requirements. If the CONTRACTOR keeps and maintains public records upon completion of the

Agreement, the CONTRACTOR shall meet all applicable requirements for retaining public records. All records stored electronically must be provided to the VILLAGE, upon request from the VILLAGE's custodian of public records or designee, in a format that is compatible with the information technology systems of the VILLAGE.

IF THE CONTRACTOR HAS QUESTIONS REGARDING THE APPLICATION OF CHAPTER 119, FLORIDA STATUTES, TO THE CONTRACTOR'S DUTY TO PROVIDE PUBLIC RECORDS RELATING TO THIS AGREEMENT, CONTACT THE CUSTODIAN OF PUBLIC RECORDS OR DESIGNEE AT 561-584-8200 (ext. 8431), kwynn@vpsfl.org, OR BY MAIL AT VILLAGE OF PALM SPRINGS, 226 CYPRESS LANE, PALM SPRINGS, FL 33461.

6.12 Preparation: This Agreement shall not be construed more strongly against either party regardless of who was more responsible for its preparation.

6.13 PALM BEACH COUNTY IG: In accordance with Palm Beach County ordinance number 2011-009, the CONTRACTOR acknowledges that this Agreement may be subject to investigation and/or audit by the Palm Beach County Inspector General. The CONTRACTOR has reviewed Palm Beach County ordinance number 2011-009 and is aware of its rights and/or obligations under such ordinance.

6.14 All notices required in this Agreement shall be sent by certified mail, return receipt requested, and sent to the addresses appearing on the first page of this Agreement.

6.15 The VILLAGE is exempt from payment of Florida State Sales and Use Tax. The CONTRACTOR shall not be exempted from paying sales tax to its suppliers for materials used to fill contractual obligations with the VILLAGE, nor is the CONTRACTOR authorized to use the VILLAGE'S Tax Exemption Number in securing such materials.

7. Indemnification. CONTRACTOR shall indemnify and hold harmless the VILLAGE in the same manner as provided in the SWA Contract as it relates to the indemnification of the Solid Waste Authority of Palm Beach County.

8. Agreement Administration. Services of the CONTRACTOR shall be under the general direction of the Village Manager, or his/her designee, who will act as the VILLAGE'S representative during the term of the Agreement.

9. E-Verify Pursuant to Section 448.095(2), Florida Statutes, effective January 1, 2021, the CONTRACTOR shall:

9.1 Register with and use the E-Verify system to verify the work authorization status of all newly hired employees and require all subcontractors (providing services or receiving funding under this Agreement) to register with and use the E-Verify system to verify the work authorization status of all the subcontractors' newly hired employees;

9.2 Secure an affidavit from all subcontractors (providing services or receiving funding under this Agreement) stating that the subcontractor does not employ, contract with, or subcontract with an "unauthorized alien" as defined in Section 448.095(1)(k), Florida Statutes;

9.3 Maintain copies of all subcontractor affidavits for the duration of this Agreement and provide the same to the Owner upon request;

9.4 Comply fully, and ensure all of its subcontractors comply fully, with Section 448.095, Florida Statutes;

9.5 Be aware that a violation of Section 448.09, Florida Statutes (Unauthorized aliens; employment prohibited) shall be grounds for termination of this Agreement; and,

9.6. Be aware that if the VILLAGE terminates this Agreement under Section 448.095(2)(c), Florida Statutes, the CONTRACTOR may not be awarded a contract for at least one (1) year after the date on which the Agreement is terminated and will be liable for any additional costs incurred by the VILLAGE as a result of the termination of the Agreement.

9.7 IN WITNESS WHEREOF, the VILLAGE and CONTRACTOR have caused this Agreement to be executed the day and year shown above.

VILLAGE OF PALM SPRINGS, FLORIDA

By: _____

Bev Smith, Mayor

ATTEST

_____

Kimberly Wynn, Village Clerk

Approved as to form and legal sufficiency:

_____

Glen J. Torcivia, Village Attorney

CONTRACTOR:

THOMPSON CONSULTING SERVICES, LLC

[Corporate Seal]



By: _____

Print Name: Jon Hoyle

Title: President

STATE OF FLORIDA)
COUNTY OF Orange)

Sworn to (or affirmed) and subscribed before me by means of ☑ physical presence or ☐ online notarization _____, as President of Thompson Consulting Services, LLC, a company authorized to do business in the State of Florida, and who is personally known to me or who has produced the following _____ as identification.

Notary Public

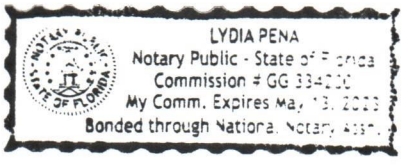

_____

Print Name: Lydia Pena

My commission expires: May 13, 2023

YOUR PARTNER FOR
SOLID WASTE SOLUTIONS

ADDENDUM NO. 1

DISASTER DEBRIS MANAGEMENT AND SUPPORT SERVICES

RFP No. 22-202/DL **February 10, 2022**

This Addendum to the specifications and contract documents is issued to provide additional information and clarification to the original RFP's scope of services and proposal form and is hereby declared a part of the original scope of services and contract documents. In case of a conflict, this Addendum shall govern.

PROPOSERS shall acknowledge receipt of this Addendum by inserting this Addendum Number and Date issued within Proposal Form 1 – Transmittal Letter located within the original RFP document. Failure to do so may be cause for the PROPOSER to be rendered as non-responsive.

REMINDER:

SUBMISSION DUE DATE: FEBRUARY 18, 2022

SUBMISSION DEADLINE: 2:00PM

VIA NEGOMETRIX

1. The following are questions received prior to the deadline on Tuesday, February 8, 2022:

   Q.1: Part III: PROPOSAL SUBMISSION REQUIREMENTS under item 3.2 indicates that "proposers shall provide all requested information in the order and in the format requested" within that document. Can the County please clarify what is the preference for submitting items that are listed more than once? Examples are:
   - Proposal Form 2 (requested under 3.2.3.2 and 3.2.7)
   - Proposal Form 5 (requested under 3.2.3.5, 3.2.8, and 3.9)
   - Proposal Form 6 (requested under 3.2.3.6, 3.2.8, and 3.2.10)
   - Expertise of Designated Staff (requested in 3.2.4 Item D and 3.2.5 Item B)

   Should these be included more than once, or in one section?

   A.1:
   - Proposal Form 2 – Price Proposal must be uploaded once in the "Pricing Sheet" section in Negometrix.
   - Proposal Forms 5 and 6 have been stricken from the section in the RFP.
   - 3.2.4 Item D pertains to the personnel and management's knowledge to meet the minimum requirements whereas 3.2.5 Item B pertains to the experience and qualifications including but not limited to previous experience in similar or related work, laws, and regulations. Proposers should clearly provide information as detailed in each different section to align with the evaluation criteria.

   Q.2: Question Due Date: Page 5 of the Procurement Schedule indicates that 2/7/22 is the last day to submit questions; however the website indicates 2/8/22 (see below): "***QUESTION DEADLINE: The deadline for questions is February 8, 2022 by 5:00pm."*** Can you please confirm the question deadline date?

   A.2: The deadline for questions for RFP No.: 22-202/DL – Disaster Debris Management and Support Services is February 8, 2022 as stated in Negometrix **which is correct.** (Copy of RFP 22-202 page 2 was uploaded for clarification).

Q.3: Attachments to Forms: Are attachments permitted in support of responses to Proposal Forms? For example, in Proposal Form 5/Proposer's Qualification Statement, a response to Question #8 may be better answered with an attachment providing more text than allowed in the form field.

A.3: Section 1.7 – Proposal Forms – Yes, Each Proposal Form questionnaire (except Proposal Form 2 – Price Proposal that is to be uploaded in "Pricing Sheets") allows the Proposer to upload the completed Forms and any supporting documents.

Q.4: Section 3.2.8 Small/Minority/Women Business Enterprise (S/M/WBE) Participation: Are there any Small/Minority/Women Business Enterprise (S/M/WBE) Participation forms to be included in Proposer's response?

A.4: No forms are included. No Affirmative Procurement Initiative (API) was applied to this solicitation. However, the Authority encourages S/M/WBE participation.

Q.5: Option to Upload/Attach Documents: Within the RFP Package – Sections 1.5 & 1.6 (Proposer's Experience and Qualifications & Technical Expertise), Proposer's are instructed to provide responses to the questions in the text box below or attach a document. After reviewing the individual questions, it appears that the attach/upload document option is not enabled. Can the Authority confirm that Proposers may attach/upload documents and enable this option within Negometrix if so?

A.5: The attach/upload document option has been enabled. Please type into the text box to activate the upload button/feature.

2. Section 3.2.8 "Small/Minority/Women Business Enterprise (S/M/WBE) Participation" title has been revised to remove Proposal Forms 5 and 6 from Page 17, as memorialized as per attached "REV-17" of the RFP.

ALL ELSE REMAINS THE SAME

Diane LeRay

Diane LeRay, CPPO, CPPB
Procurement Manager

3.2.7 Cost (Proposal Form 2):

A. Evaluation will be based on Total Proposal Price for Items 1 through 15 that outlines the position descriptions, estimated annual hours and the unit price per hour. The extension of each line item will be added to achieve the aggregate of Items 1 through 15.

B. Price Proposal will include a price for all expenses and equipment, including but not limited to ADMS, travel related expenses, meal allowances, hotel rooms, and any other relevant out-of-pocket expenses, as well as vehicles, electronics, communications equipment and any other equipment, facilities or infrastructure necessary to carry out the task as established in this RFP.

3.2.8 Small/Minority/Women Business Enterprise (S/M/WBE) Participation – ~~(Proposal Forms 5, and 6)~~

A. The Governing Board of the AUTHORITY has implemented the Economic Inclusion Policy and Procedures administered by the Equal Business Opportunity (EBO) Program Office to ensure that all segments of its business population, including, but not limited to small, local, minority, and women-owned businesses, have an equitable opportunity to participate in the AUTHORITY'S procurement process. Refer to Section 6 of the AUTHORITY's Purchasing Manual. Small Business Enterprise (SBE) and Minority/Women Business Enterprise (M/WBE) is hereby mentioned collectively as ("S/M/WBE") in the RFP. The PROPOSER also agrees that by submitting its response to this RFP that it constitutes an acknowledgement that it has reviewed this Section of the AUTHORITY's Purchasing Manual.

B. In accordance with Section 6.1 through 6.4 of the Purchasing Manual, Economic Inclusion Policy and Procedures, the AUTHORITY's Equal Business Opportunity (EBO) Office **has NOT applied and Affirmative Procurement Initiative to this procurement. Therefore, no local S/M/WBE participation is required by this solicitation.**

C. The AUTHORITY does however encourage vendors to include Small/Minority/Women Business Enterprises (S/M/WBE) participation, whenever possible. For information on the Economic Inclusion Policy and Procedures, please contact the EBO Office at 561-640-4000 or visit www.swa.org/EBO.

D. **Commercially useful purpose:** Shall constitute any work that is required to complete or achieve the contract goals and includes by way of example, but not limited to, the following:

- Project/Operations Management Services
- Collection Monitoring
- Data Processing
- Debris Site Monitoring
- Payment Monitoring
- Reconciliation Processing
- Compliance Reporting

The examples are intended to be illustrative and not exhaustive. Upon application to the AUTHORITY by the PROPOSER, this list may be expanded.

3.2.9 PROPOSER'S Qualification Statement – (Proposal Form 5)

3.2.10 Scrutinized Business Certification – (Proposal Form 6)

YOUR PARTNER FOR
SOLID WASTE SOLUTIONS

AGREEMENT FOR

DISASTER DEBRIS MANAGEMENT AND SUPPORT SERVICES

BETWEEN

SOLID WASTE AUTHORITY OF PALM BEACH COUNTY

AND

THOMPSON CONSULTING SERVICES, LLC

AGREEMENT NO. 22-202

SOLID WASTE AUTHORITY OF PALM BEACH COUNTY
7501 NORTH JOG ROAD
WEST PALM BEACH, FLORIDA 33412
(561) 640-4000

TABLE OF CONTENTS

ARTICLE		PAGE
1.	Effective Date and Incorporation of Recitals	1
2.	Services to be Performed by Consultant	1
3.	Compensation	1
4.	Insurance	2
5.	Standard of Care	3
6.	Indemnification	3
7.	Independent Consultant	3
8.	Authority to Conduct Business	3
9.	Compliance with Laws	3
10.	Sub-Consultant	4
11.	Federal and State Taxes	4
12.	Availability of Funds	4
13.	Authority's Responsibilities	4
14.	Default	4
15.	Termination for Convenience	4
16.	Uncontrollable Forces	5
17.	Jurisdiction, Venue, Waiver of Jury Trial and Remedies	5
18.	Commercial Non-Discrimination Policy	5
19.	Waiver	6
20.	Severability	6
21.	Entirety of Agreement and Modification	6
22.	Successors and Assigns	6
23.	Contingent Fees	6
24.	Truth-in-Negotiation Certificate	7
25	Ownership of Documents	7
26.	Public Records, Access and Audits	7
27.	Inspector General	8
28.	Notice	9
29.	Contract Administration	9
30.	Key Personnel	10
31.	Equal Business Opportunity Program	10
32.	Scrutinized Companies	11
33.	Agreements with other Governmental Entities	11
34.	Third Party Beneficiary Disclaimer	11
35.	E-Verify – Employment Eligibility	11
36.	Buy America Requirements	12
37.	Disadvantaged Business Enterprises	12
38.	Certification Regarding Suspension and Debarment	13
39.	Access to Records and their Retention	13
40.	Audit Requirements	13
41.	National Environmental Policy Act (NEPA)	13
42.	Americans with Disabilities Act	14
43.	Compliance with Title VI, Title VII and other Federal Laws and Regulations	14
44.	Convict Labor Prohibition	14
	Contract Execution	15

EXHIBITS

A. Scope of Work 16
B. Fee Schedule 20

ATTACHMENTS

A. Buy America Requirements 21

AGREEMENT FOR PROFESSIONAL SERVICES

This Agreement is made and entered into as of APRIL 26th, 2022 (hereinafter referred to as the Agreement) by and between **Solid Waste Authority of Palm Beach County**, a special district created by Chapter 2001-331, Laws of Florida, as amended, (hereinafter referred to as AUTHORITY) and **THOMPSON CONSULTING SERVICES, LLC** (hereinafter referred to as CONSULTANT and when referred to collectively with AUTHORITY, the Parties), a Florida Corporation, whose Federal Employer ID Number is **45-2015453**;

Whereas, in accordance with the AUTHORITY's Request for Proposals No. 22-202/DL, solicited to employ the services of the CONSULTANT for the purpose of providing Disaster Debris Management and Support Services, and;

Whereas, CONSULTANT represents it is qualified, capable and prepared to provide such services.

Now, therefore, in consideration of the promises contained herein and other good and valuable consideration, the receipt of which is acknowledged by the other, the Parties hereto agree as follows:

ARTICLE 1 - EFFECTIVE DATE AND INCORPORATION OF RECITALS

1.1 The foregoing recitals are hereby incorporated herein by reference.

1.2 The Effective Date of this Agreement shall be **May 8, 2022,** and the Term of this Agreement shall expire on **May 7, 2025.**

1.3 The Initial Term of Agreement shall be for a three (3) year period, beginning on the Effective Date**,** unless otherwise terminated as provided herein. The AUTHORITY shall have the option of extending the Agreement for three (3) additional years, as approved by the AUTHORITY's Board, or designee, in its sole and unfettered discretion, on the same terms and conditions. Such extension shall be in the form of a written Amendment to the Agreement executed by both Parties.

ARTICLE 2 - SERVICES TO BE PERFORMED BY CONSULTANT

CONSULTANT shall perform the services as specifically stated in the Scope of Work, attached hereto and made a part hereof as Exhibit "A", and/or as may be specifically designated and authorized by the AUTHORITY. Such authorizations will be referred to as Work Assignments. Each Work Assignment shall set forth the specific services required, the amount of compensation, and the completion date. In addition, the CONSULTANT may employ the use of sub- consultant(s) whose services are necessary to the CONSULTANT in the provision of services and upon specific approval for individual Work Assignments. In such case the sub-consultant, the specific services to be performed, and his/her compensation (including a not-to-exceed amount) shall be identified as part of the Work Assignment.

ARTICLE 3 - COMPENSATION

3.1 The AUTHORITY shall pay CONSULTANT in accordance with the Fee Schedule, attached hereto and made a part hereof as Exhibit "B". In addition, the Parties may negotiate a lump sum or not-to-exceed amount on a per-project basis on an individual Work Assignment.

3.2 All invoices must reference this Agreement along with the assigned purchase order number and the Work Assignment.

3.3 CONSULTANT shall submit a monthly invoice for services rendered. Invoices shall include a statement of progress made regarding the Work Assignment, a description of services rendered, and a breakdown of hours spent on the project. There shall be no reimbursable expenses allowable.

3.4 Payment of invoices shall be within thirty (30) days after receipt of a correct, fully documented invoice. All invoices shall be delivered to:

Solid Waste Authority of Palm Beach County
7501 North Jog Road
West Palm Beach, Florida 33412
Attn: Accounts Payable

3.5 CONSULTANT will clearly mark its final/last billing with the words "Final Invoice". This will certify that all services have been fully performed under this Agreement and that all charges and costs have been invoiced to the AUTHORITY. Thereupon, this account will be closed and any additional charges or costs, not included in the Final Invoice, shall be waived by CONSULTANT. The AUTHORITY shall not be liable for the payment of any such additional charges or costs not included in the Final Invoice.

ARTICLE 4 - INSURANCE

4.1 During the performance of the Services under this Agreement, CONSULTANT shall maintain the following insurance policies written by an insurance company authorized to do business in Florida and acceptable to the AUTHORITY.

1. **General Liability** Insurance with bodily injury limits of not less than $2,000,000 for each occurrence, and with property damage limits of not less than $2,000,000 for each occurrence.

2. **Automobile Liability** Insurance with bodily injury limits of not less than $1,000,000 for each person and not less than $1,000,000 for each accident and with property damage limits of not less than $1,000,000 for each accident.

3. **Workers' Compensation** Insurance in accordance with statutory requirements and Employer's Liability Insurance with limits of not less than $1,000,000 for each accident, $1,000,000 for each disease, and $1,000,000 aggregate.

4. **Professional Liability** Insurance with limits of not less than $1,000,000 annual aggregate.

4.2 Deductible amounts shall not exceed 5% of the total amount of required insurance in each category. Should any policy contain any unusual exclusions, said exclusions shall be so indicated on the certificate(s) of insurance.

4.3 CONSULTANT shall furnish AUTHORITY **Certificates of Insurance**, which shall include a provision that policy cancellation, non-renewal or reduction of coverage will not be effective until at least **thirty (30) days** after written notice has been given to the AUTHORITY. CONSULTANT shall include AUTHORITY as an **Additional Insured** on the General Liability and Automobile Liability insurance policy required by this Agreement. All of CONSULTANT'S sub-consultants shall be required to include AUTHORITY and CONSULTANT as **Additional Insured** on all of their liability insurance policies.

4.4 CONSULTANT shall ensure that CONSULTANT's naming of the AUTHORITY as an additional insured on its General Liability and Automobile Liability insurance policies pursuant to this Agreement shall afford coverage for the negligent, reckless, intentionally wrongful or willful acts of CONSULTANT and other persons employed or utilized by the CONSULTANT in the performance of this Agreement.

4.5 In the event that sub-consultants used by the CONSULTANT do not have insurance, or do not meet the required insurance limits herein, CONSULTANT shall indemnify and hold harmless the AUTHORITY for any claim(s) in excess of the sub-consultants insurance coverage.

4.6 The CONSULTANT shall not commence work under this Agreement until all insurance required as stated herein has been obtained and such insurance has been approved by the AUTHORITY.

ARTICLE 5 - STANDARD OF CARE

5.1 CONSULTANT shall exercise the same degree of care, skill, and diligence in the performance of any and all work performed pursuant to this Agreement as is ordinarily provided by comparable, qualified professionals under similar circumstances. The CONSULTANT shall, at no additional cost to AUTHORITY, re-perform services which fail to satisfy the foregoing standard of care.

5.2 The CONSULTANT warrants that all services shall be performed by skilled and competent personnel to the highest professional standards in the field.

ARTICLE 6 - INDEMNIFICATION

6.1 **GENERAL**

Having considered the risks and potential liabilities that may exist during the performance of the services and in consideration of the promises included herein, AUTHORITY and CONSULTANT agree to allocate such liabilities in accordance with this Article 6.

6.2 **INDEMNIFICATION**

The CONSULTANT shall indemnify and hold harmless the AUTHORITY, and its officers and employees, from all liabilities, damages, losses, and costs, including, but not limited to, reasonable attorney's fees, to the extent caused by the negligence, recklessness, or intentionally wrongful conduct of the CONSULTANT and other persons employed or utilized by the CONSULTANT in the performance of the Agreement.

6.3 **SURVIVAL**

Upon completion of all services, obligations and duties provided for in this Agreement, or in the event of termination of this Agreement for any reason, the terms and conditions of this Article shall survive.

ARTICLE 7 - INDEPENDENT CONSULTANT

7.1 The CONSULTANT is, and shall be, in the performance of all work services and activities performed under this Agreement, an Independent Consultant, and not an employee, agent, or servant of the AUTHORITY. All persons engaged in any of the work or services performed pursuant to this Agreement shall at all times, and in all places, be subject to the CONSULTANT'S sole direction, supervision, and control. The CONSULTANT shall exercise control over the means and manner in which it and its employees perform the work, and in all respects the CONSULTANT 'S relationship and the relationship of its employees to the AUTHORITY shall be that of an Independent Consultant and not as employees or agents of the AUTHORITY.

7.2 The CONSULTANT does not have the power or authority to bind the AUTHORITY in any promise, agreement or representation other than specifically provided for in this Agreement.

ARTICLE 8 - AUTHORITY TO CONDUCT BUSINESS

The CONSULTANT hereby represents and warrants that it has and will continue to maintain all licenses and approvals required to conduct its business and perform all requirements in this Agreement.

ARTICLE 9 - COMPLIANCE WITH LAWS

In performance of the Services, the CONSULTANT will comply with applicable regulatory requirements including federal, state, special district, and local laws, rules, regulations, orders, codes, criteria and standards.

ARTICLE 10 - SUB-CONSULTANT

10.1 The AUTHORITY reserves the right, in its sole and unfettered discretion, to accept the use of a sub-consultant or to reject the selection of a particular sub-consultant under this Agreement.

10.2 If a sub-consultant fails to perform or make progress, as required by this Agreement, and it is necessary to replace the sub-consultant to complete the work in a timely fashion, the CONSULTANT shall promptly do so, subject to acceptance of the new sub-consultant by the AUTHORITY.

ARTICLE 11 - FEDERAL AND STATE TAXES

The AUTHORITY is exempt from Federal Tax and State Sales and Use Taxes. Upon request, the AUTHORITY will provide an exemption certificate to CONSULTANT. The CONSULTANT shall not be exempted from paying sales tax to its suppliers for materials to fulfill contractual obligations with the AUTHORITY, nor shall the CONSULTANT be authorized to use the AUTHORITY'S Tax Exemption Number in securing such materials.

ARTICLE 12 - AVAILABILITY OF FUNDS

The obligations of the AUTHORITY under this Agreement are subject to the availability of funds lawfully appropriated for its purpose by the Board of the Solid Waste Authority of Palm Beach County.

ARTICLE 13 - AUTHORITY'S RESPONSIBILITIES

AUTHORITY shall be responsible for providing access to all project sites, and providing information on hand required by CONSULTANT, including; existing reports, studies, financial information, and other required data that are available in the files of the AUTHORITY.

ARTICLE 14 - DEFAULT

14.1 The AUTHORITY may, by written notice of default to the CONSULTANT, terminate this Agreement in whole or in part if: a) the CONSULTANT fails to satisfactorily perform any provisions of this Agreement; b) or fails to make progress so as to endanger performance under the terms and conditions of this Agreement; c) repeatedly fails to perform; or d) does not remedy any such failure within a period of ten (10) days (or such period as the Director of Purchasing Services may authorize in writing) after receipt of notice from the Director of Purchasing Services specifying such failure. In the event the AUTHORITY terminates this Agreement in whole or in part because of default of the CONSULTANT, the AUTHORITY may, in its sole and unfettered discretion, procure goods and/or services similar to those required under this Agreement and the CONSULTANT shall be liable for any excess costs incurred due to this action.

14.2 If it is determined that the CONSULTANT was not in default or that the default was excusable (e.g., failure due to causes beyond the control of, or without the fault or negligence of the CONSULTANT), the rights and obligations of the Parties shall be those provided in Article 15 – Termination for Convenience.

ARTICLE 15 – TERMINATION FOR CONVENIENCE

15.1 The Director of Purchasing Services may, whenever the interests of the AUTHORITY so require, terminate this Agreement, in whole or in part, for the convenience of the AUTHORITY. The Director of Purchasing Services shall give five (5) days prior written Notice of Termination to the CONSULTANT, specifying the portions of the Agreement to be terminated and when the termination is to become effective. If only portions of the Agreement are terminated, the CONSULTANT has the right to withdraw, without adverse action by the AUTHORITY, from the entire Agreement.

15.2 Unless directed differently in the Notice of Termination, the CONSULTANT shall incur no further obligations in connection with the terminated work, and shall stop work to the extent specified on the date given in the Notice of Termination. Additionally, unless directed differently, the CONSULTANT shall terminate outstanding orders and/or subcontracts related to the terminated work.

15.3 Unless the CONSULTANT is in breach of this Agreement, the CONSULTANT shall be paid for services rendered to the AUTHORITY'S satisfaction through the date of termination specified in the Notice of Termination.

ARTICLE 16 - UNCONTROLLABLE FORCES

16.1 Neither the AUTHORITY nor CONSULTANT shall be considered to be in default of this Agreement if delays in or failure of performance shall be due to Uncontrollable Forces, the effect of which, by the exercise of reasonable diligence, the non-performing party could not avoid. The term "Uncontrollable Forces" shall mean any event which results in the prevention or delay of performance by a party of its obligations under this Agreement and which is beyond the reasonable control of the nonperforming party. It includes, but is not limited to fire, flood, earthquakes, storms, lightning, epidemic, pandemic, war, riot, civil disturbance, sabotage, and governmental actions.

16.2 Neither party shall, however, be excused from performance if nonperformance is due to forces which are preventable, removable, or remediable and which the nonperforming party could have, with the exercise of reasonable diligence, prevented, removed or remedied with reasonable dispatch. The non-performing party shall, within a reasonable time of being prevented or delayed from performance by an uncontrollable force, give written notice to the other party describing the circumstances and uncontrollable forces preventing continued performance of the obligations of this Agreement.

ARTICLE 17 – JURISDICTION, VENUE, WAIVER OF JURY TRIAL AND REMEDIES

This Agreement shall be governed by the laws of the State of Florida. Any and all legal action necessary to enforce the Agreement shall be in a State court of competent jurisdiction located exclusively in Palm Beach County. With the exception of the choice of law and venue provisions contained herein, no remedy conferred upon any party is intended to be exclusive of any other remedy, and each and every such remedy shall be cumulative and shall be in addition to every other remedy given hereunder or now or hereafter existing at law or in equity. No single or partial failure by any party to exercise any right, power, or remedy hereunder, shall preclude that party from exercising that right, power or remedy in the future. **THE AUTHORITY AND CONSULTANT FREELY AND VOLUNTARILY AGREE TO WAIVE ITS RESPECTIVE RIGHT TO A JURY TRIAL ON ANY ISSUE(S) SO TRIABLE.**

ARTICLE 18 – COMMERCIAL NON-DISCRIMINATION POLICY

As a condition of entering into this Agreement, the CONSULTANT represents and warrants that it will comply with the AUTHORITY's Commercial Non-Discrimination Policy, as described in Section 6.3 of the AUTHORITY's Purchasing Manual, including subsequent amendments thereto, if any. As part of such compliance, the CONSULTANT shall not discriminate on the basis of race, color, religion, ancestry or national origin, gender, age, marital status, familial status, sexual orientation, gender identity or expression, disability, or genetic information in the solicitation, selection, hiring or commercial treatment of subcontractors, vendors, suppliers, or commercial customers, nor shall the CONSULTANT retaliate against any person for reporting instances of such discrimination. The CONSULTANT shall provide equal opportunity for subcontractors, vendors and suppliers to participate in all of its public sector and private sector subcontracting and supply opportunities, provided that nothing contained in this clause shall prohibit or limit otherwise lawful efforts to remedy the effects of marketplace discrimination that have occurred or are occurring in the AUTHORITY's relevant marketplace in Palm Beach County. The CONSULTANT understands and agrees that a material violation of this clause shall be considered a material breach of this Agreement and may result in termination of this Agreement, disqualification or debarment of the CONSULTANT from participating in AUTHORITY contracts, or other sanctions. This clause is not enforceable by or for the benefit of, and creates no obligation to, any third party.

The CONSULTANT agrees and understands that the provisions of Section 6.3 of the AUTHORITY's Purchasing Manual are incorporated herein by reference and that the CONSULTANT is familiar with the contents of same.

ARTICLE 19 - WAIVER

A waiver by either AUTHORITY or CONSULTANT of any breach of this Agreement shall not be binding upon the waiving party unless such waiver is in writing. In the event of a written waiver, such a waiver shall not affect the waiving party's rights with respect to any other or further or subsequent breach. The making or acceptance of a payment by either party with knowledge of the existence of a default or breach shall not operate or be construed to operate as a waiver of any further or subsequent default or breach.

ARTICLE 20 - SEVERABILITY

20.1 The invalidity, illegality, or unenforceability of any provision of this Agreement, or the occurrence of any event rendering any portion or provision of this Agreement void, shall in no way affect the validity or enforceability of any other portion or provision of the Agreement. Any void provision shall be deemed severed from the Agreement and the balance of the Agreement shall be construed and enforced as if the Agreement did not contain the particular portion or provision held to be void. The Parties further agree to reform the Agreement to replace any stricken provision with a valid provision that comes as close as possible to the intent of the stricken provision.

20.2 The provisions of this section shall not prevent the entire Agreement from being void if a provision which is of the essence of the Agreement is determined to be void.

ARTICLE 21 - ENTIRETY OF AGREEMENT AND MODIFICATION

The AUTHORITY and the CONSULTANT agree that this Agreement, including Exhibits and Attachments, and any matters incorporated by specific reference sets forth the entire agreement between the Parties, and that there are no promises or understandings other than those stated herein. This Agreement supersedes all prior agreements, contracts, proposals, representations, negotiations, letters or other communications between the AUTHORITY and CONSULTANT pertaining to the services, whether written or oral. None of the provisions or terms and conditions contained in this Agreement may be added to, amended, modified, superseded, or otherwise altered except by written instrument executed by the Parties thereto.

ARTICLE 22 - SUCCESSORS AND ASSIGNS

AUTHORITY and CONSULTANT each binds itself and its partners, successors, executors, administrators, assigns and legal representatives to the other party and its partners, successors, executors, administrators, assigns and legal representatives. CONSULTANT shall not assign this Agreement without the prior express written approval of the AUTHORITY in its sole discretion via executed amendment.

ARTICLE 23 - CONTINGENT FEES

The CONSULTANT warrants that it has not employed or retained any company or person, other than a bona fide employee working solely for the CONSULTANT to solicit or secure this Agreement and that it has not paid or agreed to pay any person, company, corporation, individual or firm, other than a bona fide employee working solely for the CONSULTANT, any fee, commission, percentage, gift or any other consideration contingent upon or resulting from the award or making of this Agreement.

ARTICLE 24 - TRUTH-IN-NEGOTIATION CERTIFICATE

24.1 Execution of this Agreement by the CONSULTANT shall act as the execution of a truth-in-negotiation certificate certifying that the wage rates and costs used to determine the compensation provided for in this Agreement are accurate, complete, and current as of the Effective Date of the Agreement.

24.2 The said rates and costs shall be adjusted to exclude any significant sums should the AUTHORITY determine that the rates and costs were increased due to inaccurate, incomplete or noncurrent wage rates or due to inaccurate representations of fees paid to outside consultants. The AUTHORITY shall exercise its rights under this "Certificate" within one (1) year following payment.

ARTICLE 25 - OWNERSHIP OF DOCUMENTS

CONSULTANT shall be required to cooperate with other consultants relative to providing information requested in a timely manner and in the specified form. Any and all documents, records, disks, original drawings, or other information shall become the property of the AUTHORITY for its use and/or distribution as may be deemed appropriate by the AUTHORITY in its sole and unfettered discretion.

ARTICLE 26 - PUBLIC RECORDS, ACCESS AND AUDITS

26.1 It is the intent of this Article to maintain compliance with the Florida Public Records Law, Ch. 119, Florida Statutes, as amended.

26.2 **DESIGNATED RECORDS CUSTODIAN CONTACT INFORMATION:**

IF THE CONSULTANT HAS QUESTIONS REGARDING THE APPLICATION OF CHAPTER 119, FLORIDA STATUTES, THE CONSULTANT'S DUTY TO PROVIDE PUBLIC RECORDS RELATING TO THIS AGREEMENT, CONTACT THE CUSTODIAN OF PUBLIC RECORDS AT:
RECORDS MANAGER
SOLID WASTE AUTHORITY OF PALM BEACH COUNTY
7501 NORTH JOG ROAD
WEST PALM BEACH, FL 33412
561-640-4000 EXT. 4606
RECORDSCUSTODIAN@SWA.ORG

26.3 The CONSULTANT shall maintain records related to all charges, expenses, and costs incurred in estimating and performing the work, in accordance with the timeframes and classifications for records retention as per the General Records Schedule GS1-SL for State and Local Government Agencies (see: https://dos.myflorida.com/library-archives/records-management/general-records-schedules/) after completion or termination of this Contract. Upon AUTHORITY'S request, CONSULTANT shall provide AUTHORITY with access to such records during normal business hours at a location within Palm Beach County for purposes of inspection or audit.

26.4 Notwithstanding anything herein to the contrary, the CONSULTANT expressly acknowledges that: i) it is providing a specific service to the AUTHORITY in the performance of this Contract; ii) acting on behalf of the AUTHORITY in the performance of this Contract; iii) that it has read and is familiar with the Florida Public Records Law, Ch. 119, Florida Statutes, as amended, and both understand its responsibility and obligation to comply with this law; and iv) to the extent any question(s) arise regarding its duties to produce public records, it shall contact the Records Manager with same.

26.5 Any public records requests directed to, or related in any way to this contract shall be directed solely to the Records Manager. If the requested records are not in the possession of the Records Manager they shall immediately notify the CONSULTANT and the CONSULTANT must provide the records or allow access to the records within a reasonable time. A CONSULTANT who fails to provide the records to the public agency within a reasonable time may be subject to penalties under Florida Statutes (F.S) §119.10, and §119.10(2) provides that a person who willfully and knowingly violates the Public Records Act commits a misdemeanor of the first degree, which is punishable by up to a year in jail and a fine not to exceed $1,000.

26.6 Therefore, the CONSULTANT is required to:

1) Keep and maintain public records that ordinarily and necessarily would be required by the AUTHORITY in order to perform the service;

2) Upon AUTHORITY's request from the AUTHORITY's Records Manager; provide the AUTHORITY with a copy of the requested records to allow the records to be inspected or copied within a reasonable time on the same terms and conditions that the AUTHORITY would provide the records at a cost that does not exceed the cost provided by Florida law;

3) Ensure that public records that are exempt or confidential and exempt from public records disclosure requirements are not disclosed except as authorized by law for the duration of the Agreement term and following the completion of the Agreement if the CONSULTANT does not transfer the records to the AUTHORITY; and

4) Upon completion of the Agreement, transfer at no cost to the AUTHORITY, all public records in possession of the CONSULTANT or keep and maintain public records to the AUTHORITY upon completion or termination of the Agreement; the CONSULTANT shall destroy any duplicate public records that are exempt or confidential and exempt from public records disclosure requirements. If the CONSULTANT keeps and maintains public records upon completion of the Agreement, the CONSULTANT shall meet all applicable requirements for retaining public records. All records stored electronically must be provided to the AUTHORITY, upon request from the AUTHORITY's Records Manager, either during performance of the Agreement or after termination or completion of the Agreement in a format that is compatible with the information technology systems of the AUTHORITY.

26.7 Failure of the CONSULTANT to comply with these requirements shall be a material breach of this Contract.

26.8 CONSULTANT shall maintain financial and program records to justify all charges and costs incurred in performing the work for at least three (3) years following final payment by the AUTHORITY as Federal Emergency Management Agency (FEMA) sub-grantee as required by 2 CFR 200.333. The AUTHORITY shall have access to such books, records, and documents as required in this section for the purpose of inspection or audit.

26.9 In the event retention requirements in Florida Statutes Chapter 119 and 257 exceed those of FEMA, the records shall be retained to comply with State of Florida requirements.

ARTICLE 27 - INSPECTOR GENERAL

Palm Beach County has established the Office of the Inspector General (OIG), Ordinance No. 2009-049 which is authorized and empowered to review past, present and proposed county contracts, transactions, accounts and records. The AUTHORITY has entered into an Interlocal Agreement (ILA) for Inspector General Services. This agreement

provides for the Inspector General to provide services to the AUTHORITY in accordance with the authority, functions and powers set out in the Palm Beach County Office of Inspector General Ordinance. All parties doing business with the AUTHORITY and receiving AUTHORITY funds shall fully cooperate with the Inspector General including providing access to records relating to this agreement. The Inspector General has the power to subpoena witnesses, administer oaths, require the production of records, and audit, investigate, monitor, and inspect the activities of the CONSULTANT, its officers, agents, employees, and lobbyists in order to ensure compliance with contract specifications and detect corruption and fraud. Failure to cooperate with the Inspector General or interference or impeding any investigation shall be in violation of Ordinance 2009-049, and punished pursuant to Section 125.69, Florida Statutes, in the same manner as a second degree misdemeanor.

ARTICLE 28 - NOTICE

Any notice, demand, communication, or request required or permitted hereunder shall be in writing and delivered in person or sent by certified mail, postage prepaid as follows:

AS TO AUTHORITY

Solid Waste Authority of Palm Beach County
7501 North Jog Road
West Palm Beach, Florida 33412

Attention: Executive Director
Office No.: 561-640-4000 Fax No.: 561-640-3400

AS TO CONSULTANT

Thompson Consulting Services, LLC
2601 Maitland Center Parkway
Maitland, Florida 32751

Attention: Nate Counsell, Executive Vice President
Office No.: 407-792-0018 Fax No.: 407-878-7858 E-Mail: ncounsell@thompsoncs.net

Notices shall be effective when received at the addresses as specified above. Changes in the respective addresses to which such notice is to be directed may be made from time to time by either party by written notice to the other party. Facsimile transmission is acceptable notice effective when received, however, facsimile transmissions received (i.e., printed) after 5:00 p.m. or on weekends or holidays, will be deemed received on the next business day. The original of the notice must additionally be mailed as required herein.

Nothing contained in this Article shall be construed to restrict the transmission of routine communications between representatives of CONSULTANT and AUTHORITY.

ARTICLE 29 - CONTRACT ADMINISTRATION

Services of CONSULTANT shall be under the general direction of the **Chief Operations Officer**, or designee, who shall act as the AUTHORITY'S representative during the term of the Agreement.

ARTICLE 30 - KEY PERSONNEL

CONSULTANT shall notify AUTHORITY in the event of key personnel changes which might affect this Agreement. Notification shall be made within ten (10) days of said changes. AUTHORITY has the right to reject proposed changes in key personnel. The following personnel shall be considered key personnel:

Jon Hoyle – Principal-in-Charge
Cell No.: 321-303-2543 E-Mail: jhoyle@thompsoncs.net

Nathaniel Counsell – Principal-in-Charge
Cell No.: 407-619-2781 E-Mail: ncounsell@thompsoncs.net

Eric Harrison – Program/Project Manager
Cell No.: 407-312-1670 E-Mail: eharrison@thompsoncs.net

Corey Thomas – FEMA Public Assistance Liaison
Cell No.: 407-415-7602 E-Mail: cthomas@thompsoncs.net

Daniel Gardner – Data Manager
Cell No.: 407-617-1673 E-Mail: dgardner@thompsoncs.net

Wesley Holden – ADMS Deployment
Cell No.: 813-352-9942 E-Mail: wholden@thompsoncs.net

Nicole Lehman – Planning and Preparedness
Cell No.: 407-756-7589 E-Mail: nlehman@thompsoncs.net

Patrick Gardner – GIS/Environmental
Cell No.: 407-617-1614 E-Mail: pgardner@thompsoncs.net

ARTICLE 31 – EQUAL BUSINESS OPPORTUNITY PROGRAM:

The Governing Board of the AUTHORITY has implemented the Economic Inclusion Policy administered by the Equal Business Opportunity (EBO) Program Office to ensure that all segments of its business population, including, but not limited to local, small, minority, and women-owned businesses, have an equitable opportunity to participate in the AUTHORITY'S procurement process, in accordance with Section 6.1 through 6.4 of the Purchasing Manual, which is hereby incorporated herein. Program tools and solicitation incentives are hereby referred to as the Affirmative Procurement Initiatives (API).

31.1 **Affirmative Procurement Initiative (API):**

The AUTHORITY has not applied an Affirmative Procurement Initiative to this Agreement. However, pursuant to SWA Board Policy, the AUTHORITY encourages the use and participation of S/M/WBE's in the performance of AUTHORITY contracts and agreements. This is encouraged on a voluntary basis only for this solicitation, use is not required.

31.2 **S/M/WBE Reporting:**

The CONSULTANT is encouraged, but not required to use S/M/WBE's on a voluntary basis wherever possible. In this regard, the CONSULTANT is encouraged to report to the AUTHORITY's EBO Office all payments made to sub-contractors or sub-consultants and suppliers promptly at the close-out of the Project.

31.3 **Prompt Payment:**

Upon execution of this contract by CONSULTANT, CONSULTANT shall be required to submit to AUTHORITY accurate payment information with each invoice regarding each of its Sub-consultants, if any, to ensure that

the CONSULTANT's reported subcontract participation is accurate. CONSULTANT shall pay its Sub-consultants, if any, in compliance within timeframes set forth in accordance with the Florida Local Government Prompt Payment Act, or within ten (10) days of receipt of payment from the AUTHORITY, whichever is sooner.

ARTICLE 32 - SCRUTINIZED COMPANIES

32.1 As provided in F.S. 287.135, by entering into this Agreement or performing any work in furtherance hereof, the CONSULTANT certifies that it, its affiliates, suppliers, subcontractors and consultants who will perform hereunder, have not been placed on the Scrutinized Companies With Activities in Sudan List or Scrutinized Companies With Activities in The Iran Petroleum Energy Sector List created pursuant to F.S. 215.473, or is engaged in business operations in Cuba or Syria.

If the AUTHORITY determines, using credible information available to the public, that a false certification has been submitted by CONSULTANT, this Agreement may be terminated and a civil penalty equal to the greater of $2 million or twice the amount of this Agreement shall be imposed, pursuant to F.S. 287.135. Said certification must also be submitted at the time of renewal of this Agreement.

32.2 As provided in F.S. 287.135, by entering into this Agreement or performing any work in furtherance hereof, this Agreement certifies that it, its affiliates, suppliers, subcontractors and consultants who will perform hereunder, have not been placed on the Scrutinized Companies that Boycott Israel List, or is engaged in a boycott of Israel, pursuant to F.S. 215.4725.

If the AUTHORITY determines, using credible information available to the public, that a false certification has been submitted by CONSULTANT, this may be terminated and a civil penalty equal to the greater of $2 million or twice the amount of this shall be imposed, pursuant to F.S. 287.135. Said certification must also be submitted at the time of renewal of this Agreement.

ARTICLE 33 - AGREEMENTS WITH OTHER GOVERNMENTAL ENTITIES

33.1 The CONSULTANT agrees that this Agreement constitutes an offer to all State and local government agencies of the State of Florida under the same terms and conditions, for the same prices and for the same effective period as specified in this Agreement should the CONSULTANT deem it in the best interest of their business to do so.

33.2 The Agreement in no way restricts or interferes with any State or local government agencies of the State of Florida from re-solicitation.

ARTICLE 34 – THIRD PARTY BENEFICIARY DISCLAIMER

It is not the intention of these documents to create third party beneficiary status in any person or entity that is not a direct party to this Agreement, and no language in this Agreement should be construed or interpreted as creating a third party beneficiary.

ARTICLE 35 – E-VERIFY – EMPLOYMENT ELIGIBILITY

35.1 The CONSULTANT certifies, warrants and represents that it is in compliance with Section 448.095, Florida Statutes, as may be amended and that CONSULTANT shall: (1) register with and use the E-Verify System (E-Verify.gov) to electronically verify the employment eligibility of all newly hired workers; and (2) has verified that all of the CONSULTANT'S subcontractors/subconsultants performing the duties and obligations of this Agreement are registered with and use the E-Verify System to electronically verify the employment eligibility of all newly hired workers. CONSULTANT shall obtain from each of its subcontractors/subconsultants an affidavit stating that the subcontractor/subconsultant does not employ, contract with, or subcontract with an Unauthorized Alien, as that term is defined in Section 448.095(1)(k), Florida Statutes, as may be amended. CONSULTANT shall maintain a copy of any such affidavit from a subcontractor/subconsultant for, at a minimum, the duration of the subcontract and any extension thereof. This provision shall not supersede any

provision of this Agreement which requires a longer retention period.

35.2 AUTHORITY shall terminate this Agreement if it has a good faith belief that CONSULTANT has knowingly violated Section 448.09(1), Florida Statutes, as may be amended. If AUTHORITY has a good faith belief that one of CONSULTANT'S subcontractor/subconsultant has knowingly violated Section 448.09(1), Florida Statutes, as may be amended, AUTHORITY shall notify CONSULTANT to terminate its contract with the subcontractor/subconsultant and CONSULTANT shall immediately terminate its contract with the subconsultant. If AUTHORITY terminates this Agreement pursuant to the above, CONSULTANT shall be barred from being awarded a future contract by AUTHORITY for a period of one (1) year from the date on which the Agreement was terminated. In the event of such contract termination, CONSULTANT shall also be liable for any additional costs incurred by AUTHORITY as a result of the termination.

ARTICLE 36 – BUY AMERICA REQUIREMENTS

The CONSULTANT agrees to comply with the requirements of the Federal Buy America law (see 23 U.S.C. 313, ISTEA Sections 1041 (a) and 1048 (a), and FHWA's implementing regulations at 23 CFR 635.410, as they may be amended from time to time), as they related to Federal-aid contracts and the use of steel and iron produced in the United States. A description of the requirements of Buy America is set forth in **ATTACHMENT "A"**, which is attached hereto and incorporated by reference as part of this Agreement. CONSULTANT shall provide a certification statement regarding the origin of all materials or products covered under the Buy America provisions and used in its performance of the Agreement in accordance with the requirements of law and the AUTHORITY, FDOT, FHWA, and FEMA to the extent applicable.

ARTICLE 37 – DISADVANTAGED BUSINESS ENTERPRISES

37.1 The Agreement is subject to the requirements of 49 CFR Part 26. The CONSULTANT shall not discriminate on the basis of race, color, national origin, or sex in the performance of the Agreement. The CONSULTANT shall carry out the applicable requirements of 49 CFR Part 26 in the award and administration of this U.S. DOT – assisted contract. Failure by the CONSULTANT to carry out these requirements is a material breach of Agreement, which may result in the termination of this Agreement, which may result in the termination of this Agreement or such other remedy as the AUTHORITY deems appropriate, including but not limited to the withholding of payments. Each subcontract the CONSULTANT signs with a sub-consultant must include the assurance in this paragraph. (See 49 CFR 26.13). Upon request, the CONSULTANT will provide the AUTHORITY with a copy of each subcontract it enters into.

37.2 The CONSULTANT is required to pay its sub-consultants performing work related to this Agreement for satisfactory performance of that work no later than thirty (30) days after the CONSULTANT's receipt of payment for that work from the AUTHORITY. The CONSULTANT may not hold any retainage from its sub-consultants unless pursuant to an agreement approved by the AUTHORITY. The CONSULTANT shall return all retainage payments withheld within thirty (30) days after the sub-consultant's work has been satisfactorily completed.

37.3 The CONSULTANT shall, on a monthly basis, submit payment certifications, including a certification regarding their truth and accuracy, for all payments it is seeking and certifications from all sub-consultants indicating who has been paid and how. The certifications shall comply with all Federal and State requirements regarding the reporting of DBE participation. The CONSULTANT shall, if required by the AUTHORITY or FDOT, report its DBE participation monthly on the Equal Opportunity Reporting system located on the Florida Department of Transportation's (FDOT's) website found at www.fdot.gov/equalopportunity/dbesbeprograms.shtm. Audits may be conducted to review payments to DBE sub-consultants. The CONSULTANT will fully cooperate with the AUTHORITY, FDOT, FHWA or FEMA regarding the monitoring of sub-consultants and payments made thereto.

ARTICLE 38 – CERTIFICATION REGARDING SUSPENSION, AND DEBARMENT

38.1 This Agreement is a covered transaction for purposes of 49 CFR Part 29. Accordingly, the CONSULTANT shall verify that neither the CONSULTANT, nor its principals, as defined at 49 CFR 29.995, or affiliates, as defined at 49 CFR 29.905, are excluded or disqualified from participation in this Agreement as defined at 49 CFR 29.940 and 29.945.

38.2 The CONSULTANT agrees to comply with the requirements of 49 CFR 29, Subpart C throughout the term of this Agreement. The CONSULTANT must include the requirement to comply with 49 CFR 29, Subpart C in any lower tier covered transaction it enters into. CONSULTANT's certification is a material representation of fact relied upon by the AUTHORITY. If it is later determined that the CONSULTANT knowingly rendered an erroneous certification, in addition to remedies available to the AUTHORITY, the State or Federal government may pursue any available remedies, including but not limited to suspension and/or debarment. The CONSULTANT further agrees that it will include a provision requiring such compliance in all of its subcontracts or lower tier covered transactions.

ARTICLE 39 – ACCESS TO RECORDS AND THEIR RETENTION

39.1 This provision shall supplement Article 26 of this Agreement. The CONSULTANT shall maintain adequate records to justify all charges, expenses, and costs incurred in estimating and performing the Agreement for at least five (5) years after completion or termination of this Agreement or FDOT's closure of an "emergency event" with the Florida Division of Emergency Management, whichever comes last, except in the event of litigation or settlement of claims arising from the performance of the Agreement, the CONSULTANT agrees to maintain said records until all litigation, claims, appeals or exceptions related thereto have been resolved.

The records shall be maintained at a location in Palm Beach County, Florida or such other location in Florida approved by the AUTHORITY.

39.2 The CONSULTANT shall make all of its books, records, and other documents related, in any manner to its or its sub-consultants' performance of the Agreement, available to the AUTHORITY and any other funding entity (e.g., FDOT, FEMA, the Comptroller General of the U.S. or any of their authorized representatives) for the purpose of examination, audit, reproduction, excerpts and transcripts, during normal business hours, at the CONSULTANT's place of business or if CONSULTANT's place of business is not located in Palm Beach County, then at the location for maintenance of records referenced above. The CONSULTANT shall also require its sub-consultants to make their books, records, and documents available for examination, audit, reproduction, excerpts, and transcripts, for the same duration and in the same manner, and at or near the same locations required herein of CONSULTANT.

ARTICLE 40 – AUDIT REQUIREMENTS

This provision shall supplement Article 26 of the Agreement. The CONSULTANT agrees that audits may be undertaken of its records related to its performance of the Agreement as may be authorized or requied under OMB Circular A-133, as revised. The CONSULTANT agrees that it will comply, execute any necessary documents and fully cooperate with the AUTHORITY and any State and/or Federal funding agency(ies), including but not limited to FDOT, Florida's Auditor General, FEMA, or any of their authorized representatives, in any audit or monitoring procedures or processes any such entity(ies) may undertake related to CONSULTANT's performance of the Agreement in order to properly and satisfactorily complete the audit, if any.

ARTICLE 41 – NATIONAL ENVIRONMENTAL POLICY ACT (NEPA)

The CONSULTANT shall cooperate with the AUTHORITY, FDOT, and FEMA so as to assure that all activities related to the performance of this Agreement comply with the requirements of the National NEPA of 1969, as amended, and the regulations and guidance related thereto.

ARTICLE 42 – AMERICANS WITH DISABILITIES ACT

The CONSULTANT does hereby represent and certify that it will comply with all of the requirements of the Americans with Disabilities Act of 1990 (42 USC 12102, *et seq.*) as it may be amended, and all applicable implementing regulations of the U.S. DOT, FEMA and other Federal-aid agencies.

ARTICLE 43 – COMPLIANCE WITH TITLE VI, TITLE VII, AND OTHER FEDERAL LAWS AND REGULATIONS

The CONSULTANT does hereby represent and certify that it will comply with all the requirements imposed by Title VI of the Civil Rights Act of 1964 and Title VII of the Civil Rights Act of 1968, as they have been and may be modified from time to time (42 USC 2000d, *et. seq.* and 3601 *et. seq.*) and the Age Discrimination and Employment Act of 1967 and Section 303 of the Age Discrimination Act of 1975, as amended (42 USC 6102), and all applicable Federal laws and regulations, policies, procedures, and directives of the U.S. DOT, FEMA, and/or other Federal-aid agencies, as they may be promulgated and amended from time to time.

ARTICLE 44 – CONVICT LABOR PROHIBITION

The CONSULTANT does hereby represent and certify that it will comply with the convict labor prohibition in 23 U.S.C. 114, and all implementing regulations thereto.

REMAINDER OF PAGE LEFT BLANK INTENTIONALLY

In Witness Whereof, AUTHORITY, and CONSULTANT have made and executed this Agreement all as of the day and year first above written.

SOLID WASTE AUTHORITY OF PALM BEACH COUNTY:

WITNESS:

1. _____

2. _____

By: _____
Daniel Pellowitz
Executive Director

(SEAL)

APPROVED AS TO LEGAL SUFFICIENCY:

By: _____
Howard J. Falcon III
Digitally signed by Howard J. Falcon III
DN: DC=org, DC=pbcgov, OU=Enterprise, OU=CATT, OU=Users, CN=Howard J. Falcon III, E=hjfalcon@pbcgov.org
Reason: I am the author of this document
Location: your signing location here
Date: 2022.04.25 14:32:25-04'00'
Foxit PDF Editor Version: 11.2.1
Howard J. Falcon, III
General Counsel

APPROVED AS TO TERMS AND CONDITIONS:

_____
Signature

Patrick D. Carroll
Print Name

COO
Title

ATTEST:

_____
Corporate Secretary

THOMPSON CONSULTING SERVICES, LLC:

_____
Authorized Signature

Jon Hoyle
Print Name

President
Title

04/19/2022
Date

WITNESS:

1. _____

2. _____

(Affix Corporate Seal)

THOMPSON CONSULTING SERVICES, LLC
LIMITED LIABILITY COMPANY
SEAL
2011
Delaware

Approved by Authority Board on April 13, 2022, Item No.: 9.C.2

SCOPE OF WORK

1. BACKGROUND INFORMATION:

A. The AUTHORITY is seeking CONSULTANT to provide Disaster Debris Management and Support Services for the AUTHORITY. The CONSULTANT is expected to be extremely knowledgeable in Federal Emergency Management Agency (FEMA) and Federal Highway Administration (FHWA) regulations, guidelines, and operating policies. The CONSULTANT will support the AUTHORITY before, during and following a disaster recovery effort and will be responsible for the overall monitoring of debris collection. The CONSULTANT shall coordinate with the Disaster Debris Removal Contractor(s) and the AUTHORITY to ensure a compliant, well-managed and organized approach to debris collection and disposal within FEMA guidelines.

B. The AUTHORITY will utilize an Automated Debris Management System (ADMS) and anticipates that the Disaster Debris Removal Contractor(s) will provide vehicle certification.

C. The AUTHORITY will provide a Field Service Representative for each AUTHORITY'S Franchise Service Area (1-6) to oversee and monitor the collection activity within these service areas and to work directly with the Disaster Debris Removal Contractor(s) and the CONSULTANT to schedule all work. The AUTHORITY will provide Temporary Debris Management Sites (TDMS).

D. The AUTHORITY currently has an Enterprise Geographic Information system (GIS) which utilizes ESRI's ArcGIS Server, ArcGIS Desktop Advanced, and Microsoft's SQL Server. Data is published to staff and the public using Rolta's Onpoint, which is a thin client for ESRI's ArcServer.

E. The AUTHORITY'S Disaster Debris Removal Contractor(s) will provide the manpower and collection equipment in a timely manner to safely remove disaster debris as soon as possible. Additionally, the AUTHORITY'S Disaster Debris Removal Contractor(s) will open and operate Temporary Debris Management Site (TDMS) and immediately begin processing material on site and begin shipping material to final destination within ten (10) days of opening.

F. The purpose of this RFP is to put in place an indefinite delivery/indefinite quantity Agreement for Disaster Management and Support Services based upon the specifications detailed herein. Task Orders will be issued pursuant to the Agreement, as necessary to complete work. What follows is a general description of the work anticipated.

2. SCOPE OF SERVICES:

A. The scope of services to be provided pursuant to this RFP includes Project/Operations Management, Collection Monitoring, Automated Debris Management System (ADMS), Data Processing and Management, Temporary Debris Management Site (TDMS) Monitoring, Debris Vehicle Certification, Damage Complaint Tracking, Data Compilation and Reporting, Payment Monitoring and Reconciliation Processing, Reporting and Coordinating with the AUTHORITY'S Project/Operations Manager, and other related services as outlined in this section.

B. PROPOSERS are advised to propose based on the entire scope of services as defined herein, however the AUTHORITY reserves the right to select which specific services the CONSULTANT will provide and to add or delete services throughout the term of any resulting Agreement with mutual consent.

2.1 Project/Operations Management

CONSULTANT will be responsible for Project/Operations Management of the debris monitoring activities for the AUTHORITY. This responsibility includes providing an experienced Project/Operations Manager, supplying a temporary field office for the monitoring staff, and coordinating and meeting with the AUTHORITY, field staff and contractors. Additionally, CONSULTANT will be responsible for hiring, training, deploying, scheduling and monitoring the activities of its collection monitors.

2.2 Collection Monitoring

a. The CONSULTANT will be responsible for monitoring and certifying all AUTHORITY'S authorized collection activities. This responsibility includes monitoring and certifying all collection equipment, debris loads to ensure eligibility for federal reimbursement, providing trained collection monitors, exercising quality control over the debris monitoring activity, and providing daily feedback to the AUTHORITY. CONSULTANT shall ensure that all Disaster Debris Removal Contractor(s) loads are correctly captured by their ADMS.

b. The CONSULTANT shall photographically document daily collection activities. CONSULTANT shall identify and document all leaners, hangers and stumps and coordinate with federal and state representatives to ensure eligibility and maximum reimbursement.

c. Additionally, the CONSULTANT shall coordinate with the AUTHORITY to respond to problems in the field, such as property damage complaints, debris crew issues, other customer complaints, etc.

d. CONSULTANT'S staff should be equipped with modern communication equipment. CONSULTANT shall have the ability to maintain shapefiles or geodatabases of collection passes, customer complaints and leaners, hangers and stumps including photos, and to track these issues using a GIS and provide an updated shapefile or geodatabase to the AUTHORITY on an appropriately determined schedule.

2.3 **Automated Debris Management System (ADMS)**

a. Per FEMA policy document 327 Public Assistance Debris Monitoring Guide (https://www.fema.gov/pdf/government/grant/pa/fema_327_debris_monitoring.pdf), recent advances in automated debris management tracking systems provided real-time, automated tracking and reporting. FEMA embraces technological advancements and recognizes the potential benefits of these automated systems.

b. The CONSULTANT shall provide an electronic automated debris management system that shall create load tickets electronically, eliminating the need for written and scanned tickets. The ADMS features shall include, at a minimum, the following:

1. Paperless electronic (handheld device) load ticket generation and data collection;
2. Debris vehicle certification data capture at certification site;
3. Encrypted and secure field data transfer (field to TDMS, TDMS to server);
4. Accessible secure database for government and Disaster Debris Removal Contractor(s) use. Database will be internet accessible by Disaster Debris Removal Contractor(s), AUTHORITY, State and other public entities on a need to know basis;
5. Minimal manual entry of load ticket data fields (e.g., load call, type of debris, automated system capable to input possible municipal paper tickets or different ADMS systems);

6. Automation of debris pickup location thru use of Global Positioning System (GPS) technologies;
7. Evaluation of daily event status using web-based reporting and GIS tools;
8. Coordination of Disaster Debris Removal Contractor(s) invoices, FEMA documentation and applicant payment process enabled thru an integrated database management system;
9. CONSUTLANT shall use an ADMS during the performance of services under this agreement for managing the collection, transport, and/or disposal of debris.

c. The AUTHORITY has Interlocal Agreements for Disaster Debris Management with municipalities to deliver eligible storm debris to AUTHORITY's TDMS. These municipalities may choose to use the current AUTHORITY'S paper load ticket system or contract with another ADMS company.

d. The municipalities must submit a legible and complete paper load ticket at the AUTHORITY'S TDMS with each load. The AUTHORITY will provide the truck certification, placard, and load tickets for these municipalities. CONSULTANT will be responsible to enter paper load ticket(s) and ADMS data from a different ADMS company contracted for debris load monitoring service by a municipality delivering eligible debris to an approved AUTHORITY TDMS.

2.4 **Temporary Debris Management Site (TDMS) Monitoring**

The CONSULTANT will provide TDMS monitors and spotters to observe and document the unloading, processing and loading of debris in strict accordance with FEMA requirements and the AUTHORITY'S Debris Management Plan. This responsibility includes estimating the load volume, completing the ADMS load tickets and signing and certifying that the information is complete and accurate. Additional responsibilities include conducting pre-use and post-use environmental monitoring, ensuring that the truck certifications are accurate, ensuring that all collection vehicles are equipped with the necessary safety restraints, coordinating with all federal, state and local agencies, and keeping accurate records.

2.5 **Debris Vehicle Certification**

The CONSULTANT will be responsible for measuring and capturing data elements for each Disaster Debris Removal Contractor(s) vehicle in strict accordance with FEMA requirements utilizing their ADMS. Additionally, CONSULTANT will take a photograph of each vehicle showing the vehicle number and type of vehicle. CONSULTANT will also perform random verifications once per week at each TDMS to ensure that no vehicle modifications have been made.

2.6 **Damage Complaint Tracking**

The CONSULTANT shall assist the AUTHORITY with tracking, managing, reporting and customer follow-up through to resolution of all damage complaints resulting from debris removal activities. The AUTHORITY requires the complaints to be tracked using a GIS including linked photos.

2.7 **Data Compilation and Reporting**

a. The CONSULTANT will be responsible for collecting, auditing for completeness and accuracy, tabulating and organizing debris disposal data and vehicle certifications, project records, photos and manifests, etc., to support federal (FEMA), state and local reimbursements, and subsequent audits.

b. The CONSULTANT will be responsible for providing regular status updates to the AUTHORITY. This reporting will include creating, updating and maintaining a database to include all information on debris removal and disposal, including number of loads and types, vehicle certification, stump, hanger and leaner information and images. All electronic reporting will be provided in a format acceptable to the AUTHORITY and the AUTHORITY shall have access to the database to perform queries and produce reports. The AUTHORITY will require the CONSULTANT to meet minimum standards for the timeliness of data reporting pursuant to this Section 2.2.

2.8 **Payment Monitoring and Reconciliation Processing**

The CONSULTANT will be responsible for reviewing, validating and reconciling Disaster Debris Removal Contractor(s) invoices prior to submission to the AUTHORITY for processing and approval.

2.9 **Other Related Services**

Additional services the AUTHORITY requires the CONSULTANT to provide include the following:

a. Assistance the AUTHORITY in preparing final reports for reimbursement by FEMA, FHWA and other agencies;
b. Providing professional oversight to ensure compliance with Florida Department of Environmental Protection (FDEP), Florida Department of Transportation (FDOT), Florida Department of Forestry (DOF), and FEMA regulatory and reporting requirements, as well as any other federal, state, or local regulation applicable to debris management;
c. Ensuring that the processing of federal funding is done as expeditiously as possible by taking ownership of the responsibility for ensuring the accuracy of invoices, payroll, monitoring information, reports, ADMS data, vehicle certifications, and operating data;
d. Meeting with AUTHORITY'S representatives and the Disaster Debris Removal Contractor(s) daily during disaster event activation. Meeting with the AUTHORITY'S Project Manager or his/her designee at least once per year at no cost to the AUTHORITY prior to hurricane season, and;
e. Additional services that the PROPOSER wishes to propose or that the AUTHORITY and the CONSULTANT agree to add at a later date.

FEE SCHEDULE

PROPOSAL FORM 2 – PRICE PROPOSAL

PROPOSER shall provide a completed Proposal Form 2 – Price Proposal and provide a price on every item to be considered in the evaluation of his/her submittal. The Estimated Annual Hours and Total Proposal Price provided below will be used for proposal evaluation purposes only and does not reflect the scope of services for any post-disaster work. However, the Unit Price Per Hour will be a part of the Agreement.

PROPOSED FEES (based on estimated 3 million cubic yards)			
ITEM NO / POSITION DESCRIPTION	ESTIMATED ANNUAL HOURS	UNIT PRICE PER HOUR	EXTENSION
1. Project Office/Principal	200	$89.00	$17,800.00
2. Project Manager	700	$85.00	$59,500.00
3. Operations Manager	1,900	$60.00	$114,000.00
4. FEMA Reimbursement Manager	500	$95.00	$47,500.00
5. Operations Specialist	700	$49.00	$34,300.00
6. Field Supervisor	8,000	$49.00	$392,000.00
7. Engineer/Scientist/Professional	400	$80.00	$32,000.00
8. Environmental Consultant	700	$70.00	$49,000.00
9. Environmental Field Technician	700	$50.00	$35,000.00
10. Data Manager	700	$50.00	$35,000.00
11. GIS Analyst/Specialist	200	$49.00	$9,800.00
12. Administrative Support	1,200	$25.00	$30,000.00
13. TDMS Monitor	22,000	$36.00	$792,000.00
14. Field Monitor	43,000	$36.00	$1,548,000.00
15. Call Center Operator	4,300	$22.00	$94,600.00
TOTAL PROPOSAL PRICE (Items 1 - 15):			$3,290,500.00

Proposed fees shall be fully loaded and include all expenses and equipment, including but not limited to, ADMS, travel related expenses, meal allowances, hotel rooms, and any other relevant out of pocket expenses, as well as vehicles, electronics, communications equipment and any other equipment, facilities, or infrastructure necessary to carry out the task.

ATTACHMENT "A"

BUY AMERICA REQUIREMENTS

Source of Supply – Steel and Iron (Federal Aid Contracts Only): For Federal-aid contracts, the CONSULTANT will only use steel and iron produced in the United States, in accordance with the buy America provisions of 23 CFR 635.410. CONSULTANT will ensure that all manufacturing processes for these materials occur in the United States. A manufacturing process is any process that modifies the chemical content, physical shape, size or final finish of a product, beginning with the initial melding and mixing and continuing through the bending and coating stages. A manufactured steel or iron product is complete only when all grinding, drilling, welding, finishing and coating have been completed. If a domestic product is taken outside the United States for any process, it becomes foreign source material. When using steel and iron as a component of any manufactured product incorporated into the project (*e.g.*, concrete pipe, pre-stressed beams, corrugated steel pipe, etc.), these same provisions apply, except that the manufacturer may use minimal quantities of foreign steel and iron when the cost of such foreign materials does not exceed 0.1% of the compensation or $2,500, whichever is greater. These requirements are applicable to all steel and iron materials incorporated into the finished work, but are not applicable to steel and iron items that the CONSULTANT uses but does not incorporate into the finished work. The CONSULTANT shall provide a certification from the producer of steel or iron, or any product containing steel or iron as a component, stating that all steel or iron furnished or incorporated into the finished product was manufactured in the United States in accordance with the requirements of this provision. Such certification shall also include: (1) a statement that the product was produced entirely within the United States, or (2) a statement that the product was produced with the United States except for minimal quantities of foreign steel and iron and specify the actual value of the product. Each such certification shall be furnished to the AUTHORITY prior to incorporating the material into the project. When FHWA allows the use of foreign steel on a project, CONSULTANT shall furnish invoices to document the costs of such material, and obtain the AUTHORITY's written approval prior to incorporating the material into the project.



YOUR PARTNER FOR
SOLID WASTE SOLUTIONS

REQUEST FOR PROPOSAL

FOR

DISASTER DEBRIS MANAGEMENT AND SUPPORT SERVICES

RFP NO. 22-202/DL

JANUARY 2022

SOLID WASTE AUTHORITY OF PALM BEACH COUNTY
7501 NORTH JOG ROAD
WEST PALM BEACH, FLORIDA 33412
(561) 640-4000

TABLE OF CONTENTS

PART I

GENERAL INFORMATION

1. Purpose....1
2. Pre-Proposal Conference....1
3. Background....1
4. Evaluation Process....1
5. Procurement Schedule....2
6. Proposal Submission and Withdrawal....2
7. Communication Protocol....2
8. Addenda....2
9. Rights of the Authority....3
10. Proposal Preparation Costs....3
11. Interpretations....4
12. Non-Collusion Affidavit....4
13. Public Entity Crimes....4
14. Public Records Act / Information Disclosure to Third Parties....4
15. Posting of Recommendation for Award....5
16. Insurance....5
17. Cone of Silence....5
18. Agreements with other Governmental Entities....6
19. Scrutinized Companies....6
20. Inspector General....7
21. Commercial Non-Discrimination Policy....7
22. Third Party Beneficiary Disclaimer....8
23. E-Verify – Employment Eligibility....8
24. Equal Business Opportunity Program....9

PART II

STATEMENT OF WORK

2.1. Background Information....10
2.2. Scope of Services....10

PART III

PROPOSAL SUBMISSION REQUIREMENTS

3.1. Proposal Submission Requirements and Format....14
3.2. Content....14

PART IV

PROPOSAL EVALUATION AND AWARD

4.1. General....18
4.2. Evaluation Criteria....18
4.3. Evaluation Method....18
4.4. Award....19

PART V

PROPOSAL FORMS

1. Proposal Form 1 – Transmittal Letter 21
2. Proposal Form 2 – Price Proposal 24
3. Proposal Form 3 – Non-Collusion Affidavit 25
4. Proposal Form 4 – Drug-Free Workplace 26
5. Proposal Form 5 – PROPOSER'S Qualification Statement 27
6. Proposal Form 6 – Scrutinized Certification List 30

PART VI

ATTACHMENTS

Attachment A - Sample Agreement
Attachment B – Buy America Requirements

PART I
GENERAL INFORMATION

1. PURPOSE:

A. The purpose of this Request for Proposal (RFP) is to solicit formal written Proposals from experienced and qualified individuals, corporations, partnerships and other legal entities (PROPOSER) to provide Disaster Debris Management and Support Services for the Solid Waste Authority of Palm Beach County (AUTHORITY).

B. The contract will be for an initial three (3) year term with the option for an additional three (3) year renewal upon review and approval by the AUTHORITY.

2. PRE-PROPOSAL CONFERENCE:

A. A Virtual Non-Mandatory Pre-Proposal Conference will be held on **THURSDAY, FEBRUARY 3, 2022 at 10:00am,** open to all interested parties at which time the AUTHORITY staff shall be present to answer questions and explain the intent of the RFP documents.

B. Any conclusions reached at this conference which amend the RFP documents, will be issued in the form of an Addendum.

3. BACKGROUND:

A. The AUTHORITY is a Dependent Special District created by the Florida State Legislature pursuant to Chapter 2001-331, laws of Florida, known as the Palm Beach County Solid Waste Act. The AUTHORITY is governed by the seven (7) elected County Commissioners of Palm Beach County, Florida. The governing board members are elected for terms as determined by the Solid Waste Act.

B. The AUTHORITY is the governmental agency responsible for providing an economical and environmentally conscious integrated Solid Waste Management System for Palm Beach County, Florida. With approximately 400 employees, the AUTHORITY provides solid waste disposal and recycling services and programs to the County's 1.5 million residents and businesses. The AUTHORITY also provides solid waste and recycling collection services to the residents and businesses in unincorporated Palm Beach County through private haulers under exclusive franchise agreements.

C. The AUTHORITY has built an award-winning integrated system of facilities that combines recycling, renewable energy and landfilling to effectively manage the county's waste. The AUTHORITY's system includes two waste-to-energy facilities, landfills, a recovered materials processing facility, a biosolids processing facility, seven (7) home chemical collection facilities and a network of six (6) transfer stations.

4. EVALUATION PROCESS:

The evaluation process will be conducted by the Evaluation Committee in accordance with, but not limited to, the methods and criteria described in *Part IV – Proposal Evaluation and Award*.

5. PROCUREMENT SCHEDULE:

A summary schedule of the major activities associated with the AUTHORITY'S procurement process for this Project is presented in *Table 1 – Procurement Schedule*. The AUTHORITY, at its sole and unfettered discretion, may modify the schedule as it deems appropriate. The AUTHORITY will notify of any changes in association with submittal dates by written Addenda in accordance with *Part I, Section 8 – Addenda*.

Table 1 - Procurement Schedule

NO.	ACTIVITY	DATE
1	Issue RFP	January 14, 2022
2	Non-Mandatory Pre-Proposal Meeting	February 3, 2022
3	Last Date for Authority to Receive Questions on RFP	February 8, 2022
4	Last Date for Authority to Issue Addendum in Response to Questions	February 10, 2022
5	Proposal Submission Due Date	February 18, 2022
6	Evaluation Committee Meeting, *tentative date*	February 28, 2022

6. PROPOSAL SUBMISSION and WITHDRAWAL:

A. The AUTHORITY uses to the Negometrix e-Procurement system, a 100% digital method of accessing and responding to solicitations (Negometrix). Therefore, PROPOSERS must submit their proposal via Negometrix. The AUTHORITY must receive all Proposals **no later than 2:00 P.M.,** Eastern Time, on the date established in *Part I, Section 5 – Procurement Schedule, of this RFP.*

B. The AUTHORITY cautions those submitting Proposals to ensure the accuracy of the document uploads to Negometrix.

C. The PROPOSER may withdraw their Proposal by notifying the AUTHORITY'S Purchasing Services office in writing at any time prior to the time set for the Proposals receipt deadline. PROPOSERS may withdraw their Proposals in person or through an authorized representative. Proposals, once opened, become the property of the AUTHORITY and will not be returned to the PROPOSERS.

7. COMMUNICATION PROTOCOL:

All questions and communications concerning this procurement process must be directed to Diane LeRay, CPPO, CPPB, Procurement Manager. All requests for clarifications or additional information **must be submitted in writing via electronic mail to dleray@swa.org or through Negometrix. All questions shall be submitted no later than the date specified in *Part 1, Section 5 – Procurement Schedule*** of this RFP. The AUTHORITY will record its responses to questions, if any, and address them in the form of a written Addendum to this RFP.

8. ADDENDA:

A. Should revisions to the RFP become necessary, the AUTHORITY will issue written Addenda. All Addenda must be acknowledged. This Acknowledgement must be included in Proposal Form 1 – Transmittal Letter. PROPOSER'S submittal may be rejected as non-responsive if PROPOSER has failed to submit Proposal without Addenda Acknowledgement. ***The AUTHORITY will issue all addenda through Negometrix.***

B. All PROPOSERS should contact the AUTHORITY no more than five (5) calendar days before the due date for submitting Proposals to ascertain whether any Addenda have been issued. Failure of the PROPOSER

to make this inquiry could result in its Proposal being non-responsive in the event addenda were issued and not acknowledged by the PROPOSER in their submittal.

C. No Addenda will be issued later than five (5) calendar days prior to the due date for receipt of Proposals except an Addendum withdrawing the RFP or one that includes postponement of the date for receipt of Proposals.

9. RIGHTS OF THE AUTHORITY:

This RFP constitutes an invitation for submission of Proposals to the AUTHORITY. This RFP does not obligate the AUTHORITY to procure or contract for any of the scopes of services set forth in this RFP. The AUTHORITY reserves and holds at its sole and unfettered discretion, various rights and options under Florida law, including without limitation, the following:

- To prepare and issue addenda to the RFP that may expand, restrict, or cancel any portion or all work described in the RFP without obligation to commence a new procurement process or issue a modified or amended RFP;
- To receive questions from potential PROPOSERS and to provide such answers in writing as it deems appropriate;
- To waive any informalities, technicalities or irregularities in the Proposals submitted;
- To reject any and all Proposal submissions;
- To change the date for receipt of Proposals or any deadlines and dates specified in the RFP;
- To change the procurement and/or selection process prior to receipt of Proposals;
- To conduct investigations with respect to the information provided by each PROPOSER and to request additional information (either in writing or in presentations and interviews) to support such PROPOSER'S responses and submittals;
- To visit facilities referenced in the PROPOSER'S submittal at any time or times during the procurement process;
- To seek clarification of Proposals from the PROPOSERS either in writing or in presentations and interviews, and;
- To cancel the RFP with or without the substitution of another RFP.

10. PROPOSAL PREPARATION COSTS:

The AUTHORITY accepts no liability for costs and expenses incurred by the PROPOSER in preparation and submission of Proposals and responses to clarifications from the AUTHORITY, potential site visits and interviews, negotiations, future RFP or any other work performed in connection with the Proposal. Each PROPOSER that enters into the procurement process shall prepare the required materials and submittals at its own expense and with the express understanding that they cannot make any claims whatsoever for reimbursement from the AUTHORITY for the costs and expenses associated with the process. PROPOSER should prepare their submittal providing a straightforward and concise description of the PROPOSER'S ability to meet the requirements of the RFP. Unnecessarily elaborate brochures, art work, expensive paper, bindings, visual and other presentation materials, beyond that sufficient to present a complete and effective response to this RFP is not desired.

11. INTERPRETATIONS:

A. The AUTHORITY will not be bound by or responsible for any explanation or interpretation of the RFP documents other than those given in written addenda. In no event shall PROPOSERS rely on any oral statement by the AUTHORITY, its staff, agents, advisors, or consultants.

B. Any PROPOSER that submits in its Proposal to the AUTHORITY any information which is determined to be substantially inaccurate, misleading, exaggerated, or incorrect, may be disqualified from consideration.

12. NON – COLLUSION AFFIDAVIT:

The PROPOSER is required to submit Proposal Form 3 – Non-Collusion Affidavit stipulating Agreement to the following: "PROPOSER certifies that its Proposal is made without previous understanding, Agreement, or connection with any person, firm, or corporation making a Proposal for the same item(s) and is in all respects fair, without outside control, collusion, fraud, or otherwise illegal action".

13. PUBLIC ENTITY CRIMES:

Pursuant to Section 287.133(2)(a), as amended: A person or affiliate who has been placed on the convicted vendor list following a conviction for a public entity crime may not submit a bid on a contract to provide any goods or services to a public entity, may not submit a bid on a contract with a public entity for the construction or repair of a public building or public work, may not submit bids on leases of real property to a public entity, may not be awarded or perform work as a contractor, provider supplier, subcontractor, or consultant under a contract with any public entity, and may not transact business with any public entity in excess of the threshold amount provided in Section 287.017 for CATEGORY TWO for a period of thirty-six (36) months from the date of being placed on the convicted vendor list.

14. PUBLIC RECORDS ACT/INFORMATION DISCLOSURE TO THIRD PARTIES:

A. Sealed bids, proposals, SOQs, or replies received by the AUTHORITY pursuant to a competitive solicitation are exempt from s. 119.07(1) and s.24(a), Article I of the State Constitution until such time as the AUTHORITY provides notice of an intended decision or until thirty (30) days after opening the bids, proposals, SOQs, or final replies, whichever is earlier. As such, the AUTHORITY shall not in any way be liable or responsible for the proper disclosure or result of the proper disclosure of any submissions or portions thereof submitted in response to the RFP.

B. The law provides for certain exemptions from disclosure. If the PROPOSER believes that some information contained in their Proposals is exempt from disclosure, the PROPOSER is instructed to label such information as specifying the exact section of the public records, or other Florida or Federal law that justifies nondisclosure, and request in writing the AUTHORITY keep such information confidential and free from disclosure. The AUTHORITY reserves the right to make any final determination of the applicability of the public records or other Florida or Federal law. Prior to releasing any information, the AUTHORITY will inform the PROPOSER and allow the PROPOSER to seek an injunction prohibiting the AUTHORITY from releasing the information. Each PROPOSER agrees that the AUTHORITY may reveal any confidential and exempt materials to designated AUTHORITY staff and Palm Beach County officials involved in the evaluation process, and to any outside consultant or third parties who serve on the Evaluation Committee or who are hired by the AUTHORITY to assist in the evaluation process.

C. Furthermore, each PROPOSER agrees to indemnify and hold harmless the AUTHORITY and each of their officers, employees, and agents from all costs, damages, and expenses incurred in connection with refusing to disclose any material, which the PROPOSER has designated as confidential and exempt.

D. Oral presentations, meetings where PROPOSER(S) is/are answering questions, negotiations, and AUTHORITY meetings to discuss negotiation strategy are exempt from public access in accordance with Sections 286.0113(2), Florida Statutes.

15. POSTING OF RECOMMENDATION FOR AWARD:

A. Recommendation for Award will be posted on the date of the Evaluation Committee meeting for a period of five (5) calendar days. Failure to file a protest to the Director of Purchasing Services within the time prescribed, as more fully detailed in the AUTHORITY'S Purchasing Manual, Section 10, shall constitute a waiver of protest proceedings.

B. It is the PROPOSER'S sole responsibility to ascertain the time and date of posting of the Recommendation for Award. This may be accomplished by telephone, fax, e-mail, or other means deemed timely by the PROPOSER.

C. It is understood by the PROPOSER that the Evaluation Committee makes only a recommendation which does not constitute the actual award itself. The actual award will be made by the SWA Board at a duly noticed public meeting.

D. Nothing contained in this Section shall limit or divest the SWA Board of its authority pursuant to its internal policies, AUTHORITY'S Purchasing Manual, the Special Act or general law.

16. INSURANCE:

The awarded PROPOSER(S) shall maintain insurance coverage reflecting the minimum amounts and conditions specified in the attached Sample Agreement, Attachment A. In the event the PROPOSER(S) is a governmental entity or a self-insured organization, different insurance requirements may apply. Misrepresentation of any material fact, whether intentional or not, regarding the PROPOSER(S) insurance coverage, policies or capabilities may be grounds for rejection of the proposal(s) and rescission of any ensuing agreement(s).

17. CONE OF SILENCE:

17.1 Cone of silence means a prohibition on any communication, written or oral, regarding a particular request for proposal, request for qualification, bid, or any other competitive solicitation between:

(a) Any person, recognized legal entity, or either of their respective representative(s) seeking an award from such competitive solicitation; and
(b) any person who is a member of a selection or evaluation committee or panel whose purpose is to make selections, recommendations or evaluations in connection with a competitive selection process; and
(c) any employee of the department from which the contract solicitation originated and for whose primary purpose it will serve, any employee that is a Chief of the Solid Waste Authority of Palm Beach County regardless of the originating department; and
(d) Notwithstanding the above, any person, legal entity, or their respective representative(s), may contact any member(s) of the Authority's Governing Board, the Executive Director, Purchasing Director or Procurement Manager, however, any such communication shall only be by written correspondence, and in all cases the Purchasing Director shall be copied. Any oral communications to any of these persons(s) listed in this subsection regarding a particular competitive solicitation is strictly prohibited.

17.2 For the purposes of this section, a person or legal entity's representative shall include any person or group of persons acting on behalf of that person or legal entity, including but not limited to an employee, partner, officer, director, consultant, lobbyist, or any actual or potential subcontractor or consultant of the person or legal entity.

17.3 The Cone of Silence shall be in effect as of the deadline to submit the proposal, bid, or other response to a competitive solicitation. Each request for proposal, request for qualification, bid, or any other competitive solicitation shall provide notice of the Cone of Silence requirements and refer to this policy.

17.4 The Cone of Silence shall remain in effect for all person(s), legal entity, or their respective representative(s) submitting a response to a competitive solicitation until such time as the provisions of subsection 17.7 are satisfied, even if the person withdraws his/her submittal from the competitive process, or is otherwise eliminated from consideration consistent with the procedures of the competitive process.

17.5 The provisions of this policy shall not apply to oral communications at any proceeding, including pre-bid conferences, oral presentations before selection committees, contract negotiations during any meeting, presentations made to the board, and protest hearings. Further, the Cone of Silence shall not apply to contract negotiations between any employee and the intended awardees, or any dispute resolution process following the filing of a protest between the person filing the protest and any employee.

17.6 The Cone of Silence shall not apply to any purchase made in an amount less than the competitive bid threshold set forth in the Authority Purchasing manual.

17.7 The Cone of Silence shall terminate at the time the Board, or Authority staff, if authorized to act on behalf of the Board, awards or approves a contract, rejects all bids or responses, or otherwise takes action which ends the solicitation process.

17.8 The Board, by means of action taken at any properly noticed Governing Board meeting, may invoke the Cone of Silence earlier than the times specified in this section, for any procurement.

17.9 Any and all questions regarding the individuals who may or may not be covered under the Cone of Silence should be directed to the Purchasing Director or designee.

18. AGREEMENTS WITH OTHER GOVERNMENTAL ENTITIES:

All PROPOSERS submitting a response to this RFP agree that such response also constitutes a response to all State and local government agencies of the State of Florida under the same terms and conditions, for the same prices and for the same effective period as specified in this RFP, should the successful PROPOSER deem it in the best interest of their business to do so. The Agreement(s) resulting from this RFP in no way restricts or interferes with any State or local government agencies of the State of Florida from re-solicitation for any or all items specified in this RFP.

19. SCRUTINIZED COMPANIES:

A. As provided in F.S. 287.135, by entering into this Contract or performing any work in furtherance hereof, the CONTRACTOR certifies that it, its affiliates, suppliers, subcontractors and consultants who will perform hereunder, have not been placed on the Scrutinized Companies With Activities in Sudan List or Scrutinized Companies With Activities in The Iran Petroleum Energy Sector List created pursuant to F.S. 215.473, or is engaged in business operations in Cuba or Syria.

If the AUTHORITY determines, using credible information available to the public, that a false certification has been submitted by CONTRACTOR, this Contract may be terminated and a civil penalty equal to the greater of $2 million or twice the amount of this Contract shall be imposed, pursuant to F.S. 287.135. Said certification may be requested at the time of Contract renewal.

B. As provided in F.S. 287.135, by entering into this Contract or performing any work in furtherance hereof, the CONTRACTOR certifies that it, its affiliates, suppliers, subcontractors and consultants who will perform hereunder, have not been placed on the Scrutinized Companies that Boycott Israel List, or is engaged in a boycott of Israel, pursuant to F.S. 215.4725.

If the AUTHORITY determines, using credible information available to the public, that a false certification has been submitted by CONTRACTOR, this Contract may be terminated and a civil penalty equal to the greater of $2 million or twice the amount of this Contract shall be imposed, pursuant to F.S. 287.135. Said certification may be requested at the time of Contract renewal.

20. INSPECTOR GENERAL:

Palm Beach County has established the Office of the Inspector General (OIG), Ordinance No. 2009-049 which is authorized and empowered to review past, present and proposed county contracts, transactions, accounts and records. The AUTHORITY has entered into an Interlocal Agreement (ILA) for Inspector General Services. This Agreement provides for the Inspector General to provide services to the AUTHORITY in accordance with the authority, functions and powers set out in the Palm Beach County Office of Inspector General Ordinance. All parties doing business with the AUTHORITY and receiving AUTHORITY funds shall fully cooperate with the Inspector General including providing access to records relating to this Agreement. The Inspector General has the power to subpoena witnesses, administer oaths, require the production of records, and audit, investigate, monitor, and inspect the activities of the CONSULTANT, its officers, agents, employees, and lobbyists in order to ensure compliance with contract specifications and detect corruption and fraud. Failure to cooperate with the Inspector General or interference with or impeding any investigation shall be in violation of Ordinance 2009-049, and punished pursuant to Section 125.69, Florida Statutes, in the same manner as a second degree misdemeanor.

21. COMMERCIAL NON-DISCRIMINATION POLICY:

A. Statement of Policy

It is the policy of the Authority not to enter into a contract or to be engaged in a business relationship with any business entity that has discriminated in the solicitation, selection, hiring or commercial treatment of vendors, suppliers, subcontractors or commercial customers on the basis of race, color, national origin, religion, ancestry, sex, age, marital status, familial status, sexual orientation, gender identity or expression, disability, or genetic information, or on the basis of any otherwise unlawful use of characteristics regarding the vendor's, supplier's or commercial customer's employees or owners; provided that nothing in this policy shall be construed to prohibit or limit otherwise lawful efforts to remedy the effects of discrimination that have occurred or are occurring in the relevant marketplace for Palm Beach County.

B. Policy Implementation

The EBO Office shall implement this policy by periodically conducting outreach and by distributing educational materials to the Authority's contracting and vendor community and related trade associations to advise such contractors, vendors and prospective respondents of this policy and the procedures to be followed in submitting complaints alleging violations of this policy. In addition, the Executive Director, the Office of the Chief Financial Officer, the Director of Purchasing, and the Office of the General Counsel shall ensure that the following commercial nondiscrimination clause language is set forth in, and incorporated into, all the Authority contracts that result from formal solicitations:

Every contract and subcontract shall contain a nondiscrimination clause that reads as follows:

"As a condition of entering into this agreement, the company represents and warrants that it will comply with the Authority's Commercial Nondiscrimination Policy as described under Section 6.3 of the Authority's Purchasing Manual. As part of such compliance, the company shall not discriminate on the basis of race, color, national origin, religion, ancestry, sex, age, marital status, familial status, sexual orientation, gender identity or expression, disability, or genetic information in the solicitation, selection, hiring or commercial treatment of subcontractors, vendors, suppliers, or commercial customers, nor shall the company retaliate against any person for reporting instances of such discrimination. The company understands and agrees that a material violation of this clause shall be considered a material breach of this agreement and may result in termination of this agreement, disqualification or debarment of the company from participating in Authority contracts, or other sanctions. This clause is not enforceable by or for the benefit of, and creates no obligation to, any third party."

All Formal Solicitations issued for Authority contracts shall include the following certification to be completed by the Respondent:

"The undersigned Respondent hereby certifies and agrees that the following information is correct:

In preparing its response on this project, the Respondent has considered all proposals submitted from qualified, potential Subcontractors and suppliers, and has not engaged in "discrimination" as defined in the Authority's Commercial Nondiscrimination Policy as set forth in Section 6.3 of its Purchasing Manual, to wit: discrimination in the solicitation, selection or commercial treatment of any Subcontractor, vendor, supplier or commercial customer on the basis of race, color, national origin, religion, ancestry, sex, age, marital status, familial status, sexual orientation, gender identity or expression, disability, or genetic information, or on the basis of any otherwise unlawful use of characteristics regarding the vendor's, supplier's or commercial customer's employees or owners; provided that nothing in this policy shall be construed to prohibit or limit otherwise lawful efforts to remedy the effects of discrimination that have occurred or are occurring in SWA's relevant marketplace. Without limiting the foregoing, "discrimination" also includes retaliating against any person or other entity for reporting any incident of "discrimination." Without limiting any other provision of the solicitation for responses on this project, it is understood and agreed that, if this certification is false, such false certification will constitute grounds for the Authority to reject the response submitted by the Respondent on this project, and to terminate any contract awarded based on the response. As part of its response, the Respondent shall provide to the Authority a list of all instances within the immediate past four (4) years where there has been a final adjudicated determination in a legal or administrative proceeding in the State of Florida that the Respondent discriminated against its Subcontractors, vendors, suppliers or commercial customers, and a description of the status or resolution of that complaint, including any remedial action taken. As a condition of submitting a response to the Authority, the Respondent agrees to comply with the Authority's Commercial Nondiscrimination Policy as described under its Purchasing Manual – Economic Inclusion Policy and Procedures, Section 6.3.

22. THIRD PARTY BENEFICIARY DISCLAIMER:

It is not the intention of these RFP documents to create third party beneficiary status in any person or entity that is not a direct party to the contract awarded as a result of being the successful Proposer, and no language in these RFP documents or the contract awarded pursuant to this RFP should be construed or interpreted as creating a third party beneficiary.

23. E-VERIFY – EMPLOYMENT ELIGIBILITY:

PROPOSER warrants and represents that it is in compliance with Section 448.095, Florida Statutes, as may be amended. No later than January 1, 2021, PROPOSER shall (1) register with and use the E-Verify System (E-Verify.gov) to electronically verify the employment eligibility of all newly hired workers; and (2) verify that

all of the PROPOSER's contractors/consultants and subcontractors/subconsultants performing any duties and obligations under the resultant agreement are registered with and use the E-Verify System to electronically verify the employment eligibility of all newly hired workers. AUTHORITY shall terminate the resultant agreement if it has a good faith belief that the PROPOSER has knowingly violated Section 448.09(1), Florida Statutes as may be amended.

24. EQUAL BUSINESS OPPORTUNITY PROGRAM:

A. The Governing Board of the AUTHORITY has implemented the Economic Inclusion Policy and Procedures administered by the Equal Business Opportunity (EBO) Office to ensure that all segments of its business population, including, but not limited to small, local, minority, and women-owned businesses, have an equitable opportunity to participate in the AUTHORITY'S procurement process. Refer to Section 6.1 through 6.4 of the AUTHORITY's Purchasing Manual. The AUTHORITY's Purchasing Manual is available at https://swa.org/602/PURCHASING-MANUAL. It is the intention that the PROPOSER review and understand these provisions. In addition, program tools and solicitation incentives are hereby referred to as the Affirmative Procurement Initiatives (API).

B. Each solicitation will be evaluated to determine the appropriate API to be applied, if any. The API, if applicable, will be outlined in detail in Part III "Proposal Submission Requirements" located herein.

REMAINDER OF PAGE LEFT BLANK INTENTIONALLY

PART II
STATEMENT OF WORK

2.1 BACKGROUND INFORMATION:

A. The AUTHORITY is seeking proposals from experienced and qualified PROPOSERS to provide Disaster Debris Management and Support Services for the AUTHORITY. Selected PROPOSER (CONSULTANT) is expected to be extremely knowledgeable in Federal Emergency Management Agency (FEMA) and Federal Highway Administration (FHWA) regulations, guidelines, and operating policies. The CONSULTANT will support the AUTHORITY before, during and following a disaster recovery effort and will be responsible for the overall monitoring of debris collection. The CONSULTANT shall coordinate with the Disaster Debris Removal Contractor(s) and the AUTHORITY to ensure a compliant, well-managed and organized approach to debris collection and disposal within FEMA guidelines.

B. The AUTHORITY will utilize an Automated Debris Management System (ADMS) and anticipates that the Disaster Debris Removal Contractor(s) will provide vehicle certification.

C. The AUTHORITY will provide a Field Service Representative for each AUTHORITY'S Franchise Service Area (1-6) to oversee and monitor the collection activity within these service areas and to work directly with the Disaster Debris Removal Contractor(s) and the CONSULTANT to schedule all work. The AUTHORITY will provide Temporary Debris Management Sites (TDMS).

D. The AUTHORITY currently has an Enterprise Geographic Information system (GIS) which utilizes ESRI's ArcGIS Server, ArcGIS Desktop Advanced, and Microsoft's SQL Server. Data is published to staff and the public using Rolta's Onpoint, which is a thin client for ESRI's ArcServer.

E. The AUTHORITY'S Disaster Debris Removal Contractor(s) will provide the manpower and collection equipment in a timely manner to safely remove disaster debris as soon as possible. Additionally, the AUTHORITY'S Disaster Debris Removal Contractor(s) will open and operate Temporary Debris Management Site (TDMS) and immediately begin processing material on site and begin shipping material to final destination within ten (10) days of opening.

F. The purpose of this RFP is to put in place an indefinite delivery/indefinite quantity Agreement for Disaster Management and Support Services based upon the specifications detailed herein. Task Orders will be issued pursuant to the Agreement, as necessary to complete work. What follows is a general description of the work anticipated.

2.2 SCOPE OF SERVICES:

A. The scope of services to be provided pursuant to this RFP includes Project/Operations Management, Collection Monitoring, Automated Debris Management System (ADMS), Data Processing and Management, Temporary Debris Management Site (TDMS) Monitoring, Debris Vehicle Certification, Damage Complaint Tracking, Data Compilation and Reporting, Payment Monitoring and Reconciliation Processing, Reporting and Coordinating with the AUTHORITY'S Project/Operations Manager, and other related services as outlined in this section.

B. PROPOSERS are advised to propose based on the entire scope of services as defined herein, however the AUTHORITY reserves the right to select which specific services the CONSULTANT will provide and to add or delete services throughout the term of any resulting Agreement with mutual consent.

2.2.1 Project/Operations Management

CONSULTANT will be responsible for Project/Operations Management of the debris monitoring activities for the AUTHORITY. This responsibility includes providing an experienced Project/Operations Manager, supplying a temporary field office for the monitoring staff, and coordinating and meeting with the AUTHORITY, field staff and contractors. Additionally, CONSULTANT will be responsible for hiring, training, deploying, scheduling and monitoring the activities of its collection monitors.

2.2.2 Collection Monitoring

a. The CONSULTANT will be responsible for monitoring and certifying all AUTHORITY'S authorized collection activities. This responsibility includes monitoring and certifying all collection equipment, debris loads to ensure eligibility for federal reimbursement, providing trained collection monitors, exercising quality control over the debris monitoring activity, and providing daily feedback to the AUTHORITY. CONSULTANT shall ensure that all Disaster Debris Removal Contractor(s) loads are correctly captured by their ADMS.

b. The CONSULTANT shall photographically document daily collection activities. CONSULTANT shall identify and document all leaners, hangers and stumps and coordinate with federal and state representatives to ensure eligibility and maximum reimbursement.

c. Additionally, the CONSULTANT shall coordinate with the AUTHORITY to respond to problems in the field, such as property damage complaints, debris crew issues, other customer complaints, etc.

d. CONSULTANT'S staff should be equipped with modern communication equipment. CONSULTANT shall have the ability to maintain shapefiles or geodatabases of collection passes, customer complaints and leaners, hangers and stumps including photos, and to track these issues using a GIS and provide an updated shapefile or geodatabase to the AUTHORITY on an appropriately determined schedule.

2.2.3 **Automated Debris Management System (ADMS)**

a. Per FEMA policy document 327 Public Assistance Debris Monitoring Guide (https://www.fema.gov/pdf/government/grant/pa/fema_327_debris_monitoring.pdf), recent advances in automated debris management tracking systems provided real-time, automated tracking and reporting. FEMA embraces technological advancements and recognizes the potential benefits of these automated systems.

b. The CONSULTANT shall provide an electronic automated debris management system that shall create load tickets electronically, eliminating the need for written and scanned tickets. The ADMS features shall include, at a minimum, the following:

1. Paperless electronic (handheld device) load ticket generation and data collection;
2. Debris vehicle certification data capture at certification site;
3. Encrypted and secure field data transfer (field to TDMS, TDMS to server);
4. Accessible secure database for government and Disaster Debris Removal Contractor(s) use. Database will be internet accessible by Disaster Debris Removal Contractor(s), AUTHORITY, State and other public entities on a need to know basis;
5. Minimal manual entry of load ticket data fields (e.g., load call, type of debris, automated system capable to input possible municipal paper tickets or different ADMS systems);

6. Automation of debris pickup location thru use of Global Positioning System (GPS) technologies;
7. Evaluation of daily event status using web-based reporting and GIS tools;
8. Coordination of Disaster Debris Removal Contractor(s) invoices, FEMA documentation and applicant payment process enabled thru an integrated database management system;
9. CONSUTLANT shall use an ADMS during the performance of services under this agreement for managing the collection, transport, and/or disposal of debris.

c. The AUTHORITY has Interlocal Agreements for Disaster Debris Management with municipalities to deliver eligible storm debris to AUTHORITY's TDMS. These municipalities may choose to use the current AUTHORITY'S paper load ticket system or contract with another ADMS company.

d. The municipalities must submit a legible and complete paper load ticket at the AUTHORITY'S TDMS with each load. The AUTHORITY will provide the truck certification, placard, and load tickets for these municipalities. CONSULTANT will be responsible to enter paper load ticket(s) and ADMS data from a different ADMS company contracted for debris load monitoring service by a municipality delivering eligible debris to an approved AUTHORITY TDMS.

2.2.4 **Temporary Debris Management Site (TDMS) Monitoring**

The CONSULTANT will provide TDMS monitors and spotters to observe and document the unloading, processing and loading of debris in strict accordance with FEMA requirements and the AUTHORITY'S Debris Management Plan. This responsibility includes estimating the load volume, completing the ADMS load tickets and signing and certifying that the information is complete and accurate. Additional responsibilities include conducting pre-use and post-use environmental monitoring, ensuring that the truck certifications are accurate, ensuring that all collection vehicles are equipped with the necessary safety restraints, coordinating with all federal, state and local agencies, and keeping accurate records.

2.2.5 **Debris Vehicle Certification**

The CONSULTANT will be responsible for measuring and capturing data elements for each Disaster Debris Removal Contractor(s) vehicle in strict accordance with FEMA requirements utilizing their ADMS. Additionally, CONSULTANT will take a photograph of each vehicle showing the vehicle number and type of vehicle. CONSULTANT will also perform random verifications once per week at each TDMS to ensure that no vehicle modifications have been made.

2.2.6 **Damage Complaint Tracking**

The CONSULTANT shall assist the AUTHORITY with tracking, managing, reporting and customer follow-up through to resolution of all damage complaints resulting from debris removal activities. The AUTHORITY requires the complaints to be tracked using a GIS including linked photos.

2.2.7 **Data Compilation and Reporting**

a. The CONSULTANT will be responsible for collecting, auditing for completeness and accuracy, tabulating and organizing debris disposal data and vehicle certifications, project records, photos and manifests, etc., to support federal (FEMA), state and local reimbursements, and subsequent audits.

b. The CONSULTANT will be responsible for providing regular status updates to the AUTHORITY. This reporting will include creating, updating and maintaining a database to include all

information on debris removal and disposal, including number of loads and types, vehicle certification, stump, hanger and leaner information and images. All electronic reporting will be provided in a format acceptable to the AUTHORITY and the AUTHORITY shall have access to the database to perform queries and produce reports. The AUTHORITY will require the CONSULTANT to meet minimum standards for the timeliness of data reporting pursuant to this Section 2.2.

2.2.8 **Payment Monitoring and Reconciliation Processing**

The CONSULTANT will be responsible for reviewing, validating and reconciling Disaster Debris Removal Contractor(s) invoices prior to submission to the AUTHORITY for processing and approval.

2.2.9 **Other Related Services**

Additional services the AUTHORITY requires the CONSULTANT to provide include the following:

a. Assistance the AUTHORITY in preparing final reports for reimbursement by FEMA, FHWA and other agencies;
b. Providing professional oversight to ensure compliance with Florida Department of Environmental Protection (FDEP), Florida Department of Transportation (FDOT), Florida Department of Forestry (DOF), and FEMA regulatory and reporting requirements, as well as any other federal, state, or local regulation applicable to debris management;
c. Ensuring that the processing of federal funding is done as expeditiously as possible by taking ownership of the responsibility for ensuring the accuracy of invoices, payroll, monitoring information, reports, ADMS data, vehicle certifications, and operating data;
d. Meeting with AUTHORITY'S representatives and the Disaster Debris Removal Contractor(s) daily during disaster event activation. Meeting with the AUTHORITY'S Project Manager or his/her designee at least once per year at no cost to the AUTHORITY prior to hurricane season, and;
e. Additional services that the PROPOSER wishes to propose or that the AUTHORITY and the CONSULTANT agree to add at a later date.

REMAINDER OF PAGE LEFT BLANK INTENTIONALLY

PART III
PROPOSAL SUBMISSION REQUIREMENTS

3.1 Proposal Submission Requirements and Format

A. The AUTHORITY uses Negometrix, a 100% digital method of accessing and responding to solicitations. Therefore, PROPOSERS must submit their proposals via Negometrix. The AUTHORITY must receive all Proposals no later than **2:00 P.M.**, Eastern Time on the date established in *Part I, Section 5 – Procurement Schedule.* The complete Proposal package shall be submitted through Negometrix. Should the PROPOSER have any issues with any interaction with the e-Procurement system, PROPOSER is encouraged to contact the Negometrix support desk for assistance as follows: https://support-us.negometrix.com/support/solutions/articles/44000141067-negometrix-supplier-guide.

B. Marketing brochures or any other information not pertaining to this RFP shall not be included in the Proposal.

C. Proposals should demonstrate that the PROPOSER is qualified to perform the Scope of Work based upon relevant professional experience.

3.2 Content

The PROPOSER shall provide the appropriate information in accordance with the content requirements set forth in the following subsections. To allow the Evaluation Committee to more effectively review the Proposals, PROPOSERS shall provide all requested information in the order and in the format requested below.

3.2.1 Title Page

The Title Page shall include the RFP Title and Number. The page shall indicate clearly the name of the PROPOSER submitting the Proposal and the name, address, phone number, fax number and e-mail address of the PROPOSER'S designated contact person. The PROPOSER'S designated contact person is the individual who shall be the main point of contact for the AUTHORITY to communicate with regarding this procurement.

3.2.2 Table of Contents

3.2.3 General Information

PROPOSER shall provide completed Proposal Forms 1 – 6 as follows:

3.2.3.1 *Proposal Form 1 – Transmittal Letter*

PROPOSER shall submit a completed Proposal Form 1 – Transmittal Letter acknowledging, among other things, that the PROPOSER has completely reviewed, understands, and agrees to be bound by the requirements of this RFP. The Proposal Transmittal Letter shall be signed by a representative of the PROPOSER who is empowered to sign it and to commit the PROPOSER to the obligations contained in the Proposal.

3.2.3.2 *Proposal Form 2 –Price Proposal*

A. PROPOSER shall submit a completed Proposal Form 2 – Price Proposal. PROPOSER is required to submit a total proposal price that shall be inclusive of all expenses for Debris Management Support Services. No minimum or maximum amount of work is being promised.

B. The AUTHORITY may request explanations for any out-of-balance pricing, explanations for any pricing it deems too low or too high, and to negotiate a best and final price with the best ranked PROPOSER(S).

3.2.3.3 *Proposal Form 3 – Non-Collusion Affidavit*

PROPOSER shall provide a completed Proposal Form 3 – Non-Collusive Affidavit as described in *Part I, Section 12 – Non-Collusion Affidavit*.

3.2.3.4 *Proposal Form 4 – Drug-Free Workplace*

PROPOSER shall provide a completed Proposal Form 4 – Drug-Free Workplace.

3.2.3.5 *Proposal Form 5 – PROPOSER'S Qualification Statement*

PROPOSER shall provide a completed Proposal Form 5 – Proposer's Qualification Statement.

3.2.3.6 *Proposal Form 6 – Scrutinized List Certification*

PROPOSER shall provide a completed Proposal Form 6 – Scrutinized List Certification.

3.2.4 Minimum Requirements

The PROPOSER shall substantiate in its submittal that it meets or exceeds the following minimum requirements. Failure to do so may be cause for disqualification of its submittal:

A. The PROPOSER, both corporate and individual, must be fully licensed and certified for the type of work to be performed in the **State of Florida** at the time of submittal of their response to the RFP. Should the PROPOSER not be fully licensed and certified, its submittal will be rejected;

B. PROPOSER must be engaged in providing the services as outlined in this RFP;

C. PROPOSER must have a demonstrated comprehensive understanding in areas listed in this RFP. Understanding and previous experience are essential criteria in the qualifying process;

D. PROPOSER'S personnel and management to be utilized for the services described in this RFP shall be knowledgeable in their areas of expertise. The AUTHORITY reserves the right to perform investigations as may be deemed necessary to insure that competent persons will be utilized in the performance of the contract.

E. PROPOSER shall provide evidence of current levels of insurance as stipulated in the sample Agreement of this RFP.

3.2.5 Experience and Qualifications

PROPOSER shall submit the following:

A. **PROPOSER'S Credentials**: Details on the qualifications of the firm, including a brief history of the firm, documentation of the firm's experience providing services similar to those requested in this RFP and the number of years in business. Qualifications for all sub-contractor(s) should also be included in this section;

B. **Expertise of Designated Staff**: Describe the qualifications and experience of personnel that will provide these services including demonstrated knowledge and understanding of the types

of services to be performed; previous experience in similar or related work, local codes, laws and regulations governing the work;

C. **Past Performance**: PROPOSER shall provide any information that documents successful and reliable experience in past performance, especially those performances related to the requirements of this RFP. Related experience shall be restricted to those assignments undertaken within the last five (5) years (March, 2017). PROPOSER shall provide a breakdown showing all activations by calendar year in the last five (5) years. PROPOSER shall outline contract invoice amount and whether manual load ticket or ADMS was utilized for each activation;

D. **Managerial Capabilities**: Provide evidence of the firm's ability to manage tasks simultaneously and expeditiously and describe firm's approach to problem/task resolution and teamwork;

E. **References**: List a minimum of three (3) former references (name, contact persons, telephone number and email address) for similar projects only, who can attest to the firm's knowledge, quality of work, timeliness, diligence and flexibility;

F. **Current Contracts**: PROPOSER shall provide a list of all city, county, state or federal disaster service related contracts which he/she is currently obligated to fulfill during the initial term of this agreement. PROPOSER shall also disclose any contractual relationship with FEMA, or any other entity that may pose a conflict of interest or prevent the PROPOSER, if selected, from fulfilling its obligations to the AUTHORITY;

G. **Invoice Processing**: The PROPOSER shall provide a description of its invoicing process.

3.2.6 Technical

In this section PROPOSER must explain the Statement of Work (Part II – Statement of Work) as understood by the PROPOSER and detail the approach, activities and work products. PROPOSER shall also provide the following:

A. A detailed list of all services that the firm is able to provide and explain how these services will be accomplished;

B. Address, in the order presented, all of the services outlined in Section 2, Scope of Services, and its subsections;

C. Provide a guaranteed response time and schedule of services;

D. A list of any assistance the AUTHORITY may be requested to provide to the selected PROPOSER;

E. Other information the PROPOSER may deem advantageous to demonstrate understanding and approach to the work.

3.2.7 Cost (Proposal Form 2):

A. Evaluation will be based on Total Proposal Price for Items 1 through 15 that outlines the position descriptions, estimated annual hours and the unit price per hour. The extension of each line item will be added to achieve the aggregate of Items 1 through 15.

B. Price Proposal will include a price for all expenses and equipment, including but not limited to ADMS, travel related expenses, meal allowances, hotel rooms, and any other relevant out-of-pocket expenses, as well as vehicles, electronics, communications equipment and any other equipment, facilities or infrastructure necessary to carry out the task as established in this RFP.

3.2.8 Small/Minority/Women Business Enterprise (S/M/WBE) Participation – (Proposal Forms 5, and 6)

A. The Governing Board of the AUTHORITY has implemented the Economic Inclusion Policy and Procedures administered by the Equal Business Opportunity (EBO) Program Office to ensure that all segments of its business population, including, but not limited to small, local, minority, and women-owned businesses, have an equitable opportunity to participate in the AUTHORITY'S procurement process. Refer to Section 6 of the AUTHORITY's Purchasing Manual. Small Business Enterprise (SBE) and Minority/Women Business Enterprise (M/WBE) is hereby mentioned collectively as ("S/M/WBE") in the RFP. The PROPOSER also agrees that by submitting its response to this RFP that it constitutes an acknowledgement that it has reviewed this Section of the AUTHORITY's Purchasing Manual.

B. In accordance with Section 6.1 through 6.4 of the Purchasing Manual, Economic Inclusion Policy and Procedures, the AUTHORITY's Equal Business Opportunity (EBO) Office **has NOT applied and Affirmative Procurement Initiative to this procurement. Therefore, no local S/M/WBE participation is required by this solicitation.**

C. The AUTHORITY does however encourage vendors to include Small/Minority/Women Business Enterprises (S/M/WBE) participation, whenever possible. For information on the Economic Inclusion Policy and Procedures, please contact the EBO Office at 561-640-4000 or visit www.swa.org/EBO.

D. **Commercially useful purpose:** Shall constitute any work that is required to complete or achieve the contract goals and includes by way of example, but not limited to, the following:

- Project/Operations Management Services
- Collection Monitoring
- Data Processing
- Debris Site Monitoring
- Payment Monitoring
- Reconciliation Processing
- Compliance Reporting

The examples are intended to be illustrative and not exhaustive. Upon application to the AUTHORITY by the PROPOSER, this list may be expanded.

3.2.9 PROPOSER'S Qualification Statement – (Proposal Form 5)

3.2.10 Scrutinized Business Certification – (Proposal Form 6)

PART IV
PROPOSAL EVALUATION AND AWARD

4.1. GENERAL:

All Proposals submitted in response to this RFP will be evaluated by the AUTHORITY'S Evaluation Committee based on the information supplied per *Part III – Proposal Submission Requirements* and utilizing criteria specified in *Part IV – Proposal Evaluation and Award*.

4.2. EVALUATION CRITERIA:

The review and analysis of the Proposals by the Evaluation Committee will be based on the following criteria:

- Submission of a complete package including all Forms
- Experience and Qualifications
- Technical Plan
- Price Proposal

4.3. EVALUATION METHOD:

A. Evaluation Committee members will conduct a completeness review of the Proposals. Proposals must include all requirements specified in *Part III – Proposal Submission Requirements.* Minor informalities or irregularities may be waived by the AUTHORITY. Those Proposals found to be complete, will then be ranked by individual members. At its discretion the AUTHORITY may require any PROPOSER(S) to make an oral presentation of his/her submittal. An oral presentation provides an opportunity for the PROPOSER(S) to clarify his/her submittal for the AUTHORITY. The AUTHORITY, if deemed necessary, will notify the PROPOSER(S) that an oral presentation will be scheduled which may result in a re-evaluation of proposals.

B. *Table 2 – Evaluation Criteria and Points* provide guidelines for the Evaluation Committee members for the ranking of Proposals. In each category where points are to be assigned by individual Evaluation Committee members, PROPOSERS may receive up to the maximum allowable number of points for each category. When awarding points to a proposal, the Evaluation Committee members will be encouraged to use the entire range of awardable points in each category. The total points awarded by each Evaluation Committee member to each Proposal will be tallied and ranked. The proposal with the most points will be ranked a 1; the proposal with the second most points will be ranked a 2; the proposal with the third most points will be ranked a 3, and so forth until each proposal has been awarded points and ranked accordingly. The Proposal with the lowest number 1 rankings will be ranked first overall and recommended for award of the Contract. The Evaluation Committee members will continue in this manner and provide overall rankings to each proposal until all proposals have been given an overall ranking. No points will be awarded for use of local S/M/WBE or S/M/WBE's. The use of these firms is encouraged strictly on a voluntary basis and will not be an evaluative factor in the award of the final Contract awarded pursuant to this solicitation.

Table 2 - Evaluation Criteria and Points

EVALUATION CRITERIA	POINTS
Experience and Qualifications of the Firm	40 [1]
Technical	40 [2]
Price Proposal	20 [3]
TOTAL:	**100**

Footnotes:

[1] PROPOSER will receive up to 40 points if PROPOSER submits and exceeds the minimum requirements listed in Part III, Section 3.2.5 – Experience and Qualifications Narrative and also demonstrate applicable recent experience. Points will be deducted if these requirements are not met.

[2] PROPOSER will receive up to 40 points if PROPOSER submits and exceeds the minimum requirements listed in Part III, Section 3.2.6 – Technical. Points will be deducted if any of these requirements are not met.

[3] PROPOSER who submits the Proposal with the lowest Total Proposal Price will receive 20 points. See example below.

Total Proposal Price	Percentage of Available Points	Total Points
$4,000,000.00	100%	20.00
$4,500,000.00	89%	17.78
$5,000,000.00	80%	16.00
$5,500,000.00	73%	14.55
$6,000,000.00	67%	13.33
$6,500,000.00	62%	12.31
$7,000,000.00	57%	11.43
$7,500,000.00	53%	10.67
$8,000,000.00	50%	10.00

Percentage of Available Points: Lowest Submittal = 100% of Available Points
Calculation for next lowest, etc.= (Lowest Submittal/Next Lowest Submittal) x 20

4.4. AWARD:

A. The AUTHORITY anticipates, but does not guarantee, award to the PROPOSER who submits the Proposal determined by the SWA Board to be the most advantageous.

B. The AUTHORITY intends to enter into the Agreement negotiations with the best ranked PROPOSER. If the AUTHORITY and the best ranked PROPOSER cannot negotiate a successful Agreement, the AUTHORITY may terminate such negotiations and begin negotiations with the next best ranked PROPOSER. No PROPOSER shall have any rights against the AUTHORITY arising from such negotiations.

C. The price structure submitted in the Proposals shall be firm. However, the AUTHORITY reserves the right to negotiate a "best and final" price with the best ranked PROPOSER.

D. The Agreement will be for a term of three (3) years with option to extend for three (3) additional years.

E. The PROPOSER understands that this RFP does not constitute an agreement or a contract with the PROPOSER. An official agreement or contract is not binding until Proposals are reviewed and accepted and a contract is awarded by the SWA Board and executed by the parties. A Sample Agreement is attached to this RFP. The AUTHORITY anticipates that the final agreement will be in substantial conformance with the Sample Agreement; nevertheless, PROPOSERS are advised that any agreement, which may result from this RFP, may deviate from the Sample Agreement.

REMAINDER OF PAGE INTENTIONALLY LEFT BLANK

PART V
PROPOSAL FORMS

The following Proposal Forms are included:

Proposal Form 1 – Transmittal Letter

Proposal Form 2 – Price Proposal

Proposal Form 3 – Non-Collusion Affidavit

Proposal Form 4 – Drug-Free Workplace

Proposal Form 5 – PROPOSER'S Qualification Statement

Proposal Form 6 – Scrutinized List Certification

REMAINDER OF PAGE INTENTIONALLY LEFT BLANK

PROPOSAL FORM 1 – TRANSMITTAL LETTER

(To be typed on PROPOSER'S Letterhead)

[Date]

Diane LeRay CPPO, CPPB
Procurement Manager, Purchasing Services
Solid Waste Authority of Palm Beach County
7501 North Jog Road
West Palm Beach, FL 33412

Dear Ms. LeRay:

_____ (PROPOSER) hereby submits its Proposal in response to the **Request for Proposal (RFP) No.: 22-202/DL for Disaster Debris Management and Support Services** issued by the Solid Waste Authority of Palm Beach County (AUTHORITY) in January 2022.

As a duly authorized representative of the PROPOSER, I hereby certify, represent and warrant, on behalf of the PROPOSER team, as follows in connection with the Proposal:

1. The PROPOSER acknowledges receipt of the RFP and the following Addenda:

No.	Date
_____	_____
_____	_____

2. The submittal of the Proposal has been duly authorized by, and in all respects is binding upon, the PROPOSER.

3. All information and statements contained in the Proposal are current, correct and complete, and are made with full knowledge that the AUTHORITY will rely on such information and statements in qualifying PROPOSER.

4. The PROPOSER certifies under penalties of perjury that the RFP has been prepared and is submitted in good faith without collusion, fraud or any other action with any other person taken in restraint of free and open competition for the services contemplated by the RFP. As used in this Proposal Form, the word "person" shall mean any natural person, business, partnership, corporation, union, committee, club, or other organization, entity, or group of individuals.

5. The PROPOSER is not currently suspended or debarred from doing business with any governmental entity.

6. The PROPOSER has reviewed all of the engagements and pending engagements of the PROPOSER, and no potential exists for any conflict of interest or unfair advantage.

7. No person or selling agency has been employed or retained to solicit the award of the Agreement under an arrangement for a commission, percentage, brokerage or contingency fee or on any other success fee basis, except bona fide employees of the PROPOSER.

8. The principal contact person who will serve as the interface between the AUTHORITY and the PROPOSER for all communications is:

Name: _____

Title: _____

Mailing Address: _____

Phone: _____

Fax: _____

E-mail: _____

The PROPOSER has carefully examined all documents constituting the RFP and the addenda thereto and, being familiar with the work and the conditions affecting the work contemplated by the RFP and such addenda, offers to furnish all labor, materials, supplies, equipment, facilities and services which are necessary, proper or incidental to carry out such work as required by and in strict accordance with this RFP and the Proposal.

_____
Name of Proposer

_____
Print Name of Designated Signatory

_____
Signature

_____
Title

State of _____

County of _____

On this _____ day of _____, 20____, before me appeared _____ personally known to me to be the person described in and who executed this _____ and acknowledged that (she/he) signed the same freely and voluntarily for the uses and purposes therein described.

In witness thereof, I have hereunto set my hand and affixed my official seal the day and year last written above.

_____
Signature

Notary Public in and for the State of _____

(Affix Seal here)

_____
(Name printed)

Residing at _____

My commission expires _____

ACKNOWLEDGMENT OF CONSULTANT, IF A PARTNERSHIP

State of _____

SS:

County of _____

On this _____ day of _____, 20_____, before me personally came and appeared _____, to me known, and known to me to be one of the members of the firm of _____ described in and who executed the foregoing instrument and he/she acknowledged to me that he/she executed the same as and for the act and deed of said firm.

_____
Notary Public
(Seal)

ACKNOWLEDGMENT OF CONSULTANT, IF AN INDIVIDUAL

State of _____

SS:

County of _____

On this _____ day of _____, 20_____, before me personally came and appeared _____, to me known, and known to me to be the person described in and who executed the foregoing instrument and acknowledged that he/she executed the same.

_____
Notary Public
(Seal)

PROPOSAL FORM 2 – PRICE PROPOSAL

PROPOSER shall provide a completed Proposal Form 2 – Price Proposal and provide a price on every item to be considered in the evaluation of his/her submittal. The Estimated Annual Hours and Total Proposal Price provided below will be used for proposal evaluation purposes only and does not reflect the scope of services for any post-disaster work. However, the Unit Price Per Hour will be a part of the Agreement.

PROPOSED FEES (based on estimated 3 million cubic yards)			
ITEM NO / POSITION DESCRIPTION	ESTIMATED ANNUAL HOURS	UNIT PRICE PER HOUR	EXTENSION
1. Project Office/Principal	200	$	$
2. Project Manager	700	$	$
3. Operations Manager	1,900	$	$
4. FEMA Reimbursement Manager	500	$	$
5. Operations Specialist	700	$	$
6. Field Supervisor	8,000	$	$
7. Engineer/Scientist/Professional	400	$	$
8. Environmental Consultant	700	$	$
9. Environmental Field Technician	700	$	$
10. Data Manager	700	$	$
11. GIS Analyst/Specialist	200	$	$
12. Administrative Support	1,200	$	$
13. TDMS Monitor	22,000	$	$
14. Field Monitor	43,000	$	$
15. Call Center Operator	4,300	$	$
TOTAL PROPOSAL PRICE (Items 1 - 15):			$

Proposed fees shall be fully loaded and include all expenses and equipment, including but not limited to, ADMS, travel related expenses, meal allowances, hotel rooms, and any other relevant out of pocket expenses, as well as vehicles, electronics, communications equipment and any other equipment, facilities, or infrastructure necessary to carry out the task.

PROPOSAL FORM 3 – NON-COLLUSION AFFIDAVIT

State of _____

County of _____

Being duly sworn deposes and says:

That she/he is an officer of the parties making the foregoing Proposal, that such Proposal is genuine and not collusive or sham; that said PROPOSER has not colluded, conspired, connived or agreed, directly or indirectly with any PROPOSER or person, to put in a sham bid or to refrain from bidding and has not in any manner, directly, or indirectly, sought by agreement or collusion or communication or conference with any person, to fix the price or affiant or any other PROPOSER, or to fix any overhead, profit or cost element of said price, or that of any other PROPOSER, or to secure any advantage against the AUTHORITY, or any person interested in the proposed contract and that all statements in said Proposal are true.

_____
Name of Proposer

_____
Print Name of Designated Signatory

_____
Signature

_____
Title

On this _____ day of _____, 20____, before me appeared _____ personally known to me to be the person described in and who executed this _____ and acknowledged that (she/he) signed the same freely and voluntarily for the uses and purposes therein described.

In witness thereof, I have hereunto set my hand and affixed my official seal the day and year last written above.

_____
Signature

Notary Public in and for the State of _____

(Affix Seal here)

_____
(Name printed)

Residing at _____

My commission expires _____

PROPOSAL FORM 4 – DRUG-FREE WORKPLACE

The undersigned vendor in accordance with Florida Statute 287.087 hereby certifies that _____ does:

(Name of Business)

1. Publish a statement notifying employees that the unlawful manufacture, distribution, dispensing, possession, or use of a controlled substance is prohibited in the workplace and specifying the actions that will be taken against employees for violations of such prohibition.

2. Inform employees about the dangers of drug abuse in the workplace, the business's policy of maintaining a drug-free workplace, any available drug counseling, rehabilitation, and employee assistance programs, and the penalties that may be imposed upon employees for drug abuse violations.

3. Give each employee engaged in providing the commodities or contractual services that are under bid a copy of the statement specified in subsection (1).

4. In the statement specified in subsection (1), notify the employees that, as a condition of working on the commodities or contractual services that are under bid, the employee will abide by the terms of the statement and will notify the employer of any conviction of, or plea of guilty or nolo contendere to, any violation of Chapter 893 or of any controlled substance law of the United State or any state, for a violation occurring in the workplace no later than five (5) days after such conviction.

5. Impose a sanction on, or require the satisfactory participation in a drug abuse assistance or rehabilitation program if such is available in the employee's community, by any employee who is so convicted.

6. Make a good faith effort to continue to maintain a drug-free workplace through implementation of this section.

As the person authorized to sign the statement, I certify that this firm complies fully with the above requirements.

_____
Print Name of Designated Signatory

_____
Signature

_____
Date

PROPOSAL FORM 5 - PROPOSER'S QUALIFICATION STATEMENT

The undersigned certifies under oath the truth and correctness of all statements and of all answers to questions made hereinafter:

SUBMITTED TO: **SOLID WASTE AUTHORITY OF PALM BEACH COUNTY**
PURCHASING SERVICES DEPARTMENT
7501 N. Jog Road
West Palm Beach, FL. 33412

Submitted by:

Name: _____

Address:_____

City, State, Zip: _____

Federal Identification Number (FID) _____

	Check One
Corporation:	☐
Partnership:	☐
Individual:	☐
Other*	☐

(* if other is being checked, please provide supporting documentation to validate the legality of the Firm)

1. State the true, exact, correct and complete name of the partnership, trade or fictitious name under which you do business and the address of the place of business.

   The correct name of the PROPOSER is:

   _____

   The address of the principal place of business is:

   _____

   _____

2. If PROPOSER is corporation, answer the following:

   a. Date of Incorporation: _____
   b. State of Incorporation: _____
   c. President's name: _____
   d. Vice President's name: _____
   e. Secretary's name: _____
   f. Treasurer's name: _____
   g. Name and Address of Resident Agent: _____
      _____

3. If PROPOSER is an individual or a partnership, answer the following:

   a. Date of organization: _____
   b. Name, address and ownership units of all partners:
      _____

      _____

      _____
   c. State whether general or limited partnership: _____

4. If PROPOSER is other than an individual, corporation or partnership, describe the organization and give the name and address of principals:

_____
_____
_____

5. If PROPOSER is operating under a fictitious name, submit evidence of compliance with the Florida Fictitious Name Statute.

_____

6. How many years has your organization been in business under its present business name? _____

Under what other former names has your organization operated?

_____
_____
_____

7. Indicate registration, license numbers or certificate numbers for the businesses or professions, which are the subject of this RFP solicitation. Please attach certificate of competency and/or state registration.

_____
_____
_____

8. Provide a narrative of Firm's Safety Program, Quality Assurance/Quality Control Management methods.

_____
_____
_____

9. List and describe all bankruptcy petitions (voluntary or involuntary) which have been filed by or against the PROPOSER, its parent or subsidiaries or predecessor organizations during the past five (5) years. Include in the description, the disposition of each such petition.

_____
_____
_____
_____

10. A list of all enforcement actions against the facility for the last three (3) years including any consent orders entered, notices of violations received, and any judgments against the facility. Also, list the amount of any fines, penalties, or judgments, or other infractions in which the destination facility or facilities have received in the most current three (3) years of operation.

_____
_____
_____
_____
_____

11. List and describe any disciplinary action, administrative proceeding, malpractice claim or other like proceeding against your Firm or any of its lawyers, whether current or pending, as well as any such action, proceeding or claim occurring during the last five (5) years.

_____

_____

_____

_____

12. Has the PROPOSER, its principals, officers or predecessors' organization(s) been CONVICTED of a Public Entity Crime, debarred or suspended from bidding by any governmental entity during the last five (5) years? If so, provide details.

_____

_____

_____

_____

13. Has the PROPOSER in the past four (4) years, been rendered a final adjudicated determination in a legal or administrative proceeding in the State of Florida that the PROPOSER discriminated against its subcontractors, vendors, suppliers or commercial customers? If yes, PROPOSER shall provide a list of all instances to include but not limited to; description of the status or resolution of the complaint, including any remedial action taken. (Attach additional sheets as necessary)

_____

_____

_____

_____

The PROPOSER acknowledges and understands that the information contained in response to this Qualifications' Statement shall be relied upon by the Solid Waste Authority of Palm Beach County (AUTHORITY), in awarding the contract and such information is warranted by PROPOSER to be true. The discovery of any omission or misstatement that materially affects the PROPOSER's qualifications to perform under the contract shall cause the AUTHORITY to reject the proposal, and if after the award, to cancel and terminate the award and/or contract.

(Signed): _____

(Printed Name): _____

(Title): _____

PROPOSAL FORM 6 – SCRUTINIZED LIST CERTIFICATION

CERTIFICATION PURSUANT TO FLORIDA STATUTE §215.4725

DISASTER DEBRIS MANAGEMENT AND SUPPORT SERVICES

RFP NO.: 22-202/DL

I, _____, on behalf of _____,
Print Name Name of Business

certifies that _____ does not:
Name of Business

1. Participate in a boycott of Israel; and
2. Is not on the Scrutinized Companies that Boycott Israel list; and
3. Is not on the Scrutinized Companies with Activities in Sudan List; and
4. Is not on the Scrutinized Companies with Activities in the Iran Petroleum Energy Sector List; and
5. Has not engaged in business operations in Cuba or Syria.

As the person authorized to sign the statement, I certify that this Firm complies fully with the above requirements.

_____ _____
PROPOSER'S SIGNATURE DATE

PART VI
ATTACHMENTS

The following Attachments are included:

Attachment A – Sample Agreement

Attachment B – Buy America Requirements

YOUR PARTNER FOR
SOLID WASTE SOLUTIONS

ATTACHMENT "A"

SAMPLE AGREEMENT FOR

_____ SERVICES

BETWEEN

SOLID WASTE AUTHORITY OF PALM BEACH COUNTY

AND

(NAME OF CONSULTANT)

AGREEMENT NO. 22-XXX

SOLID WASTE AUTHORITY OF PALM BEACH COUNTY
7501 NORTH JOG ROAD
WEST PALM BEACH, FLORIDA 33412
(561) 640-4000

TABLE OF CONTENTS

ARTICLE		PAGE
1.	Effective Date and Incorporation of Recitals	1
2.	Services to be Performed by Consultant	1
3.	Compensation	1
4.	Insurance	2
5.	Standard of Care	3
6.	Indemnification	3
7.	Independent Consultant	3
8.	Authority to Conduct Business	3
9.	Compliance with Laws	4
10.	Sub-Consultant	4
11.	Federal and State Taxes	4
12.	Availability of Funds	4
13.	Authority's Responsibilities	4
14.	Default	4
15.	Termination for Convenience	4
16.	Uncontrollable Forces	5
17.	Jurisdiction, Venue, Waiver of Jury Trial and Remedies	5
18.	Commercial Non-Discrimination Policy	5
19.	Waiver	6
20.	Severability	6
21.	Entirety of Agreement and Modification	6
22.	Successors and Assigns	6
23.	Contingent Fees	6
24.	Truth-in-Negotiation Certificate	7
25	Ownership of Documents	7
26.	Public Records, Access and Audits	7
27.	Inspector General	8
28.	Notice	9
29.	Contract Administration	9
30.	Key Personnel	10
31.	Equal Business Opportunity Program	10
32.	Scrutinized Companies	10
33.	Agreements with other Governmental Entities	11
34.	Third Party Beneficiary Disclaimer	11
35.	E-Verify – Employment Eligibility	11
36.	Buy America Requirements	12
37.	Disadvantaged Business Enterprises	12
38.	Certification Regarding Suspension and Debarment	12
39.	Access to Records and their Retention	13
40.	Audit Requirements	13
41.	National Environmental Policy Act (NEPA)	13
42.	Americans with Disabilities Act	13
43.	Compliance with Title VI, Title VII and other Federal Laws and Regulations	13
44.	Convict Labor Prohibition	14
	Contract Execution	15

EXHIBITS

A. Scope of Work 16
B. Fee Schedule 17

ATTACHMENTS

A. Sample Contract Agreement
B. Buy America Requirements 18

AGREEMENT FOR PROFESSIONAL SERVICES

This Agreement is made and entered into as of _____, 2022 (hereinafter referred to as the Agreement) by and between **Solid Waste Authority of Palm Beach County**, a special district created by Chapter 2001-331, Laws of Florida, as amended, (hereinafter referred to as AUTHORITY) and **NAME OF CONSULTANT** (hereinafter referred to as CONSULTANT), a Florida Corporation, whose Federal Employer ID Number is _____;

Whereas, in accordance with the AUTHORITY's Request for Proposals No. 22-202/DL, solicited to employ the services of the CONSULTANT for the purpose of providing _____ Services, and;

Whereas, CONSULTANT represents it is capable and prepared to provide such services.

Now, therefore, in consideration of the promises contained herein and other good and valuable consideration, the receipt of which is acknowledged by the other, the parties hereto agree as follows:

ARTICLE 1 - EFFECTIVE DATE AND INCORPORATION OF RECITALS

1.1 The foregoing recitals are hereby incorporated herein by reference.

1.2 The Effective Date of this Agreement shall be **(MONTH)(DAY) _____, 2022** and the Term of this Agreement shall expire on **(MONTH)(DAY) _____, 2025.**

1.3 The initial term of Agreement shall be for a three (3) year period, beginning on the Effective Date**,** unless otherwise terminated as provided herein. The AUTHORITY shall have the option of extending the Agreement for three (3) additional years, as approved by the AUTHORITY's Board, or designee, in its sole and unfettered discretion, on the same terms and conditions. Such extension shall be in the form of a written Amendment to the Agreement executed by both parties.

ARTICLE 2 - SERVICES TO BE PERFORMED BY CONSULTANT

CONSULTANT shall perform the services as specifically stated in the Scope of Work, attached hereto and made a part hereof as Exhibit A, and/or as may be specifically designated and authorized by the AUTHORITY. Such authorizations will be referred to as Work Assignments. Each Work Assignment shall set forth the specific services required, the amount of compensation, and the completion date. In addition, the CONSULTANT may employ the use of sub-consultant(s) whose services are necessary to the CONSULTANT in the provision of services and upon specific approval for individual Work Assignments. In such case the sub-consultant, the specific services to be performed, and his/her compensation (including a not-to-exceed amount) shall be identified as part of the Work Assignment.

ARTICLE 3 - COMPENSATION

3.1 The AUTHORITY shall pay CONSULTANT in accordance with the Fee Schedule, attached hereto and made a part hereof as Exhibit B. In addition, the parties may negotiate a lump sum or not-to-exceed amount on a per-project basis on an individual Work Assignment.

3.2 All invoices must reference this Agreement along with the assigned purchase order number and the Work Assignment.

3.3 CONSULTANT shall submit a monthly invoice for services rendered. Invoices shall include a statement of progress made regarding the Work Assignment, a description of services rendered, and a breakdown of hours spent on the project. There shall be no reimbursable expenses allowable.

3.4 Payment of invoices shall be within thirty (30) days after receipt of a correct, fully documented invoice. All invoices shall be delivered to:

Solid Waste Authority of Palm Beach County
7501 North Jog Road
West Palm Beach, Florida 33412
Attn: Accounts Payable

3.5 CONSULTANT will clearly mark its final/last billing with the words "Final Invoice". This will certify that all services have been fully performed under this Agreement and that all charges and costs have been invoiced to the AUTHORITY. Thereupon, this account will be closed and any additional charges or costs, not included in the Final Invoice, shall be waived by CONSULTANT. The AUTHORITY shall not be liable for the payment of any such additional charges or costs not included in the Final Invoice.

ARTICLE 4 - INSURANCE

4.1 During the performance of the Services under this Agreement, CONSULTANT shall maintain the following insurance policies written by an insurance company authorized to do business in Florida and acceptable to the AUTHORITY.

1. **General Liability** Insurance with bodily injury limits of not less than $2,000,000 for each occurrence, and with property damage limits of not less than $2,000,000 for each occurrence.

2. **Automobile Liability** Insurance with bodily injury limits of not less than $1,000,000 for each person and not less than $1,000,000 for each accident and with property damage limits of not less than $1,000,000 for each accident.

3. **Workers' Compensation** Insurance in accordance with statutory requirements and Employer's Liability Insurance with limits of not less than $1,000,000 for each accident, $1,000,000 for each disease, and $1,000,000 aggregate.

4. **Professional Liability** Insurance with limits of not less than $1,000,000 annual aggregate.

4.2 Deductible amounts shall not exceed 5% of the total amount of required insurance in each category. Should any policy contain any unusual exclusions, said exclusions shall be so indicated on the certificate(s) of insurance.

4.3 CONSULTANT shall furnish AUTHORITY **Certificates of Insurance**, which shall include a provision that policy cancellation, non-renewal or reduction of coverage will not be effective until at least **thirty (30) days** after written notice has been given to the AUTHORITY. CONSULTANT shall include AUTHORITY as an **Additional Insured** on the General Liability and Automobile Liability insurance policy required by this Agreement. All of CONSULTANT'S sub-consultants shall be required to include AUTHORITY and CONSULTANT as **Additional Insured** on all of their liability insurance policies.

4.4 CONSULTANT shall ensure that CONSULTANT's naming of the AUTHORITY as an additional insured on its General Liability and Automobile Liability insurance policies pursuant to this Agreement shall afford coverage for the negligent, reckless, intentionally wrongful or willful acts of CONSULTANT and other persons employed or utilized by the CONSULTANT in the performance of this Agreement.

4.5 In the event that sub-consultants used by the CONSULTANT do not have insurance, or do not meet the required insurance limits herein, CONSULTANT shall indemnify and hold harmless the AUTHORITY for any claim(s) in excess of the sub-consultants insurance coverage.

4.6 The CONSULTANT shall not commence work under this Agreement until all insurance required as stated

herein has been obtained and such insurance has been approved by the AUTHORITY.

ARTICLE 5 - STANDARD OF CARE

5.1 CONSULTANT shall exercise the same degree of care, skill, and diligence in the performance of any and all work performed pursuant to this Agreement as is ordinarily provided by comparable, qualified professionals under similar circumstances. The CONSULTANT shall, at no additional cost to AUTHORITY, re-perform services which fail to satisfy the foregoing standard of care.

5.2 The CONSULTANT warrants that all services shall be performed by skilled and competent personnel to the highest professional standards in the field.

ARTICLE 6 - INDEMNIFICATION

6.1 **GENERAL**

Having considered the risks and potential liabilities that may exist during the performance of the services and in consideration of the promises included herein, AUTHORITY and CONSULTANT agree to allocate such liabilities in accordance with this Article 6.

6.2 **INDEMNIFICATION**

The CONSULTANT shall indemnify and hold harmless the AUTHORITY, and its officers and employees, from all liabilities, damages, losses, and costs, including, but not limited to, reasonable attorney's fees, to the extent caused by the negligence, recklessness, or intentionally wrongful conduct of the CONSULTANT and other persons employed or utilized by the CONSULTANT in the performance of the Agreement.

6.3 **SURVIVAL**

Upon completion of all services, obligations and duties provided for in this Agreement, or in the event of termination of this Agreement for any reason, the terms and conditions of this Article shall survive.

ARTICLE 7 - INDEPENDENT CONSULTANT

7.1 The CONSULTANT is, and shall be, in the performance of all work services and activities performed under this Agreement, an Independent Consultant, and not an employee, agent, or servant of the AUTHORITY. All persons engaged in any of the work or services performed pursuant to this Agreement shall at all times, and in all places, be subject to the CONSULTANT'S sole direction, supervision, and control. The CONSULTANT shall exercise control over the means and manner in which it and its employees perform the work, and in all respects the CONSULTANT 'S relationship and the relationship of its employees to the AUTHORITY shall be that of an Independent Consultant and not as employees or agents of the AUTHORITY.

7.2 The CONSULTANT does not have the power or authority to bind the AUTHORITY in any promise, agreement or representation other than specifically provided for in this Agreement.

ARTICLE 8 - AUTHORITY TO CONDUCT BUSINESS

The CONSULTANT hereby represents and warrants that it has and will continue to maintain all licenses and approvals required to conduct its business and perform all requirements in this Agreement.

ARTICLE 9 - COMPLIANCE WITH LAWS

In performance of the Services, the CONSULTANT will comply with applicable regulatory requirements including federal, state, special district, and local laws, rules, regulations, orders, codes, criteria and standards.

ARTICLE 10 - SUB-CONSULTANT

10.1 The AUTHORITY reserves the right, in its sole and unfettered discretion, to accept the use of a sub-consultant or to reject the selection of a particular sub-consultant under this Agreement.

10.2 If a sub-consultant fails to perform or make progress, as required by this Agreement, and it is necessary to replace the sub-consultant to complete the work in a timely fashion, the CONSULTANT shall promptly do so, subject to acceptance of the new sub-consultant by the AUTHORITY.

ARTICLE 11 - FEDERAL AND STATE TAXES

The AUTHORITY is exempt from Federal Tax and State Sales and Use Taxes. Upon request, the AUTHORITY will provide an exemption certificate to CONSULTANT. The CONSULTANT shall not be exempted from paying sales tax to its suppliers for materials to fulfill contractual obligations with the AUTHORITY, nor shall the CONSULTANT be authorized to use the AUTHORITY'S Tax Exemption Number in securing such materials.

ARTICLE 12 - AVAILABILITY OF FUNDS

The obligations of the AUTHORITY under this Agreement are subject to the availability of funds lawfully appropriated for its purpose by the Board of the Solid Waste Authority of Palm Beach County.

ARTICLE 13 - AUTHORITY'S RESPONSIBILITIES

AUTHORITY shall be responsible for providing access to all project sites, and providing information on hand required by CONSULTANT, including; existing reports, studies, financial information, and other required data that are available in the files of the AUTHORITY.

ARTICLE 14 - DEFAULT

14.1 The AUTHORITY may, by written notice of default to the CONSULTANT, terminate this Agreement in whole or in part if: a) the CONSULTANT fails to satisfactorily perform any provisions of this Agreement; b) or fails to make progress so as to endanger performance under the terms and conditions of this Agreement; c) repeatedly fails to perform; or d) does not remedy any such failure within a period of ten (10) days (or such period as the Director of Purchasing Services may authorize in writing) after receipt of notice from the Director of Purchasing Services specifying such failure. In the event the AUTHORITY terminates this Agreement in whole or in part because of default of the CONSULTANT, the AUTHORITY may, in its sole and unfettered discretion, procure goods and/or services similar to those required under this Agreement and the CONSULTANT shall be liable for any excess costs incurred due to this action.

14.2 If it is determined that the CONSULTANT was not in default or that the default was excusable (e.g., failure due to causes beyond the control of, or without the fault or negligence of the CONSULTANT), the rights and obligations of the parties shall be those provided in Article 15 – Termination for Convenience.

ARTICLE 15 – TERMINATION FOR CONVENIENCE

15.1 The Director of Purchasing Services may, whenever the interests of the AUTHORITY so require, terminate this Agreement, in whole or in part, for the convenience of the AUTHORITY. The Director of Purchasing Services shall give five (5) days prior written Notice of Termination to the CONSULTANT, specifying the

portions of the Agreement to be terminated and when the termination is to become effective. If only portions of the Agreement are terminated, the CONSULTANT has the right to withdraw, without adverse action by the AUTHORITY, from the entire Agreement.

15.2 Unless directed differently in the Notice of Termination, the CONSULTANT shall incur no further obligations in connection with the terminated work, and shall stop work to the extent specified on the date given in the Notice of Termination. Additionally, unless directed differently, the CONSULTANT shall terminate outstanding orders and/or subcontracts related to the terminated work.

15.3 Unless the CONSULTANT is in breach of this Agreement, the CONSULTANT shall be paid for services rendered to the AUTHORITY'S satisfaction through the date of termination.

ARTICLE 16 - UNCONTROLLABLE FORCES

16.1 Neither the AUTHORITY nor CONSULTANT shall be considered to be in default of this Agreement if delays in or failure of performance shall be due to Uncontrollable Forces, the effect of which, by the exercise of reasonable diligence, the non-performing party could not avoid. The term "Uncontrollable Forces" shall mean any event which results in the prevention or delay of performance by a party of its obligations under this Agreement and which is beyond the reasonable control of the nonperforming party. It includes, but is not limited to fire, flood, earthquakes, storms, lightning, epidemic, pandemic, war, riot, civil disturbance, sabotage, and governmental actions.

16.2 Neither party shall, however, be excused from performance if nonperformance is due to forces which are preventable, removable, or remediable and which the nonperforming party could have, with the exercise of reasonable diligence, prevented, removed or remedied with reasonable dispatch. The non-performing party shall, within a reasonable time of being prevented or delayed from performance by an uncontrollable force, give written notice to the other party describing the circumstances and uncontrollable forces preventing continued performance of the obligations of this Agreement.

ARTICLE 17 – JURISDICTION, VENUE, WAIVER OF JURY TRIAL AND REMEDIES

This Agreement shall be governed by the laws of the State of Florida. Any and all legal action necessary to enforce the Agreement shall be in a State court of competent jurisdiction located exclusively in Palm Beach County. With the exception of the choice of law and venue provisions contained herein, no remedy conferred upon any party is intended to be exclusive of any other remedy, and each and every such remedy shall be cumulative and shall be in addition to every other remedy given hereunder or now or hereafter existing at law or in equity. No single or partial failure by any party to exercise any right, power, or remedy hereunder, shall preclude that party from exercising that right, power or remedy in the future. **THE AUTHORITY AND CONSULTANT FREELY AND VOLUNTARILY AGREE TO WAIVE ITS RESPECTIVE RIGHT TO A JURY TRIAL ON ANY ISSUE(S) SO TRIABLE.**

ARTICLE 18 – COMMERCIAL NON-DISCRIMINATION POLICY

As a condition of entering into this Agreement, the CONSULTANT represents and warrants that it will comply with the AUTHORITY's Commercial Non-Discrimination Policy, as described in Section 6.3 of the AUTHORITY's Purchasing Manual, including subsequent amendments thereto, if any. As part of such compliance, the CONSULTANT shall not discriminate on the basis of race, color, religion, ancestry or national origin, gender, age, marital status, familial status, sexual orientation, gender identity or expression, disability, or genetic information in the solicitation, selection, hiring or commercial treatment of subcontractors, vendors, suppliers, or commercial customers, nor shall the CONSULTANT retaliate against any person for reporting instances of such discrimination. The CONSULTANT shall provide equal opportunity for subcontractors, vendors and suppliers to participate in all of its public sector and private sector subcontracting and supply opportunities, provided that nothing contained in this clause shall prohibit or limit otherwise lawful efforts to remedy the effects of marketplace discrimination that have occurred or are occurring in the AUTHORITY's relevant marketplace in Palm Beach County. The CONSULTANT understands and agrees that a

material violation of this clause shall be considered a material breach of this Agreement and may result in termination of this Agreement, disqualification or debarment of the CONSULTANT from participating in AUTHORITY contracts, or other sanctions. This clause is not enforceable by or for the benefit of, and creates no obligation to, any third party. The CONSULTANT agrees and understands that the provisions of Section 6.3 of the AUTHORITY's Purchasing Manual are incorporated herein by reference and that the CONSULTANT is familiar with the contents of same.

ARTICLE 19 - WAIVER

A waiver by either AUTHORITY or CONSULTANT of any breach of this Agreement shall not be binding upon the waiving party unless such waiver is in writing. In the event of a written waiver, such a waiver shall not affect the waiving party's rights with respect to any other or further breach. The making or acceptance of a payment by either party with knowledge of the existence of a default or breach shall not operate or be construed to operate as a waiver of any subsequent default or breach.

ARTICLE 20 - SEVERABILITY

20.1 The invalidity, illegality, or unenforceability of any provision of this Agreement, or the occurrence of any event rendering any portion or provision of this Agreement void, shall in no way affect the validity or enforceability of any other portion or provision of the Agreement. Any void provision shall be deemed severed from the Agreement and the balance of the Agreement shall be construed and enforced as if the Agreement did not contain the particular portion or provision held to be void. The parties further agree to reform the Agreement to replace any stricken provision with a valid provision that comes as close as possible to the intent of the stricken provision.

20.2 The provisions of this section shall not prevent the entire Agreement from being void if a provision which is of the essence of the Agreement is determined to be void.

ARTICLE 21 - ENTIRETY OF AGREEMENT AND MODIFICATION

The AUTHORITY and the CONSULTANT agree that this Agreement, including Exhibits, and matters incorporated by specific reference sets forth the entire agreement between the parties, and that there are no promises or understandings other than those stated herein. This Agreement supersedes all prior agreements, contracts, proposals, representations, negotiations, letters or other communications between the AUTHORITY and CONSULTANT pertaining to the services, whether written or oral. None of the provisions or terms and conditions contained in this Agreement may be added to, amended, modified, superseded, or otherwise altered except by written instrument executed by the parties thereto.

ARTICLE 22 - SUCCESSORS AND ASSIGNS

AUTHORITY and CONSULTANT each binds itself and its partners, successors, executors, administrators, assigns and legal representatives to the other party and its partners, successors, executors, administrators, assigns and legal representatives. CONSULTANT shall not assign this Agreement without the prior express written approval of the AUTHORITY in its sole discretion via executed amendment.

ARTICLE 23 - CONTINGENT FEES

The CONSULTANT warrants that it has not employed or retained any company or person, other than a bona fide employee working solely for the CONSULTANT to solicit or secure this Agreement and that it has not paid or agreed to pay any person, company, corporation, individual or firm, other than a bona fide employee working solely for the CONSULTANT, any fee, commission, percentage, gift or any other consideration contingent upon or resulting from the award or making of this Agreement.

ARTICLE 24 - TRUTH-IN-NEGOTIATION CERTIFICATE

24.1 Execution of this Agreement by the CONSULTANT shall act as the execution of a truth-in-negotiation certificate certifying that the wage rates and costs used to determine the compensation provided for in this Agreement are accurate, complete, and current as of the Effective Date of the Agreement.

24.2 The said rates and costs shall be adjusted to exclude any significant sums should the AUTHORITY determine that the rates and costs were increased due to inaccurate, incomplete or noncurrent wage rates or due to inaccurate representations of fees paid to outside consultants. The AUTHORITY shall exercise its rights under this "Certificate" within one (1) year following payment.

ARTICLE 25 - OWNERSHIP OF DOCUMENTS

CONSULTANT shall be required to cooperate with other consultants relative to providing information requested in a timely manner and in the specified form. Any and all documents, records, disks, original drawings, or other information shall become the property of the AUTHORITY for its use and/or distribution as may be deemed appropriate by the AUTHORITY in its sole and unfettered discretion.

ARTICLE 26 - PUBLIC RECORDS, ACCESS AND AUDITS

26.1 It is the intent of this Article to maintain compliance with the Florida Public Records Law, Ch. 119, Florida Statutes, as amended.

26.2 **DESIGNATED RECORDS CUSTODIAN CONTACT INFORMATION:**

IF THE CONSULTANT HAS QUESTIONS REGARDING THE APPLICATION OF CHAPTER 119, FLORIDA STATUTES, THE CONSULTANT'S DUTY TO PROVIDE PUBLIC RECORDS RELATING TO THIS AGREEMENT, CONTACT THE CUSTODIAN OF PUBLIC RECORDS AT:
RECORDS MANAGER
SOLID WASTE AUTHORITY OF PALM BEACH COUNTY
7501 NORTH JOG ROAD
WEST PALM BEACH, FL 33412
561-640-4000 EXT. 4606
RECORDSCUSTODIAN@SWA.ORG

26.3 The CONSULTANT shall maintain records related to all charges, expenses, and costs incurred in estimating and performing the work, in accordance with the timeframes and classifications for records retention as per the General Records Schedule GS1-SL for State and Local Government Agencies (see: https://dos.myflorida.com/library-archives/records-management/general-records-schedules/) after completion or termination of this Contract. Upon AUTHORITY'S request, CONSULTANT shall provide AUTHORITY with access to such records during normal business hours at a location within Palm Beach County for purposes of inspection or audit.

26.4 Notwithstanding anything herein to the contrary, the CONSULTANT expressly acknowledges that: i) it is providing a specific service to the AUTHORITY in the performance of this Contract; ii) acting on behalf of the AUTHORITY in the performance of this Contract; iii) that it has read and is familiar with the Florida Public Records Law, Ch. 119, Florida Statutes, as amended, and both understand its responsibility and obligation to comply with this law; and iv) to the extent any question(s) arise regarding its duties to produce public records, it shall contact the Records Manager with same.

26.5 Any public records requests directed to, or related in any way to this contract shall be directed solely to the Records Manager. If the requested records are not in the possession of the Records Manager they shall immediately notify the CONSULTANT and the CONSULTANT must provide the records or allow access to the records within a reasonable time. A CONSULTANT who fails to provide the records to the public agency within a reasonable time may be subject to penalties under Florida Statutes (F.S) §119.10, and §119.10(2) provides that a person who willfully and knowingly violates the Public Records Act commits a misdemeanor of the first degree, which is punishable by up to a year in jail and a fine not to exceed $1,000.

26.6 Therefore, the CONSULTANT is required to:

1) Keep and maintain public records that ordinarily and necessarily would be required by the AUTHORITY in order to perform the service;

2) Upon AUTHORITY's request from the AUTHORITY's Records Manager; provide the AUTHORITY with a copy of the requested records to allow the records to be inspected or copied within a reasonable time on the same terms and conditions that the AUTHORITY would provide the records at a cost that does not exceed the cost provided by Florida law;

3) Ensure that public records that are exempt or confidential and exempt from public records disclosure requirements are not disclosed except as authorized by law for the duration of the Agreement term and following the completion of the Agreement if the CONSULTANT does not transfer the records to the AUTHORITY; and

4) Upon completion of the Agreement, transfer at no cost to the AUTHORITY, all public records in possession of the CONSULTANT or keep and maintain public records to the AUTHORITY upon completion or termination of the Agreement; the CONSULTANT shall destroy any duplicate public records that are exempt or confidential and exempt from public records disclosure requirements. If the CONSULTANT keeps and maintains public records upon completion of the Agreement, the CONSULTANT shall meet all applicable requirements for retaining public records. All records stored electronically must be provided to the AUTHORITY, upon request from the AUTHORITY's Records Manager, either during performance of the Agreement or after termination or completion of the Agreement in a format that is compatible with the information technology systems of the AUTHORITY.

26.7 Failure of the CONSULTANT to comply with these requirements shall be a material breach of this Contract.

26.8 CONSULTANT shall maintain financial and program records to justify all charges and costs incurred in performing the work for at least three (3) years following final payment by the AUTHORITY as Federal Emergency Management Agency (FEMA) sub-grantee as required by 2 CFR 200.333. The AUTHORITY shall have access to such books, records, and documents as required in this section for the purpose of inspection or audit.

26.9 In the event retention requirements in Florida Statutes Chapter 119 and 257 exceed those of FEMA, the records shall be retained to comply with State of Florida requirements.

ARTICLE 27 - INSPECTOR GENERAL

Palm Beach County has established the Office of the Inspector General (OIG), Ordinance No. 2009-049 which is authorized and empowered to review past, present and proposed county contracts, transactions, accounts and records. The AUTHORITY has entered into an Interlocal Agreement (ILA) for Inspector General Services. This agreement

provides for the Inspector General to provide services to the AUTHORITY in accordance with the authority, functions and powers set out in the Palm Beach County Office of Inspector General Ordinance. All parties doing business with the AUTHORITY and receiving AUTHORITY funds shall fully cooperate with the Inspector General including providing access to records relating to this agreement. The Inspector General has the power to subpoena witnesses, administer oaths, require the production of records, and audit, investigate, monitor, and inspect the activities of the CONSULTANT, its officers, agents, employees, and lobbyists in order to ensure compliance with contract specifications and detect corruption and fraud. Failure to cooperate with the Inspector General or interference or impeding any investigation shall be in violation of Ordinance 2009-049, and punished pursuant to Section 125.69, Florida Statutes, in the same manner as a second degree misdemeanor.

ARTICLE 28 - NOTICE

Any notice, demand, communication, or request required or permitted hereunder shall be in writing and delivered in person or sent by certified mail, postage prepaid as follows:

AS TO AUTHORITY

Solid Waste Authority of Palm Beach County
7501 North Jog Road
West Palm Beach, Florida 33412

Attention: Executive Director
Office No.: 561-640-4000 Fax No.: 561-640-3400

AS TO CONSULTANT

(Name of Consultant)
Address #1
Address #2
City/State/Zip Code

Attention: _____, TITLE
Office No.: _____ Fax No.: _____ E-Mail: _____

Notices shall be effective when received at the addresses as specified above. Changes in the respective addresses to which such notice is to be directed may be made from time to time by either party by written notice to the other party. Facsimile transmission is acceptable notice effective when received, however, facsimile transmissions received (i.e., printed) after 5:00 p.m. or on weekends or holidays, will be deemed received on the next business day. The original of the notice must additionally be mailed as required herein.

Nothing contained in this Article shall be construed to restrict the transmission of routine communications between representatives of CONSULTANT and AUTHORITY.

ARTICLE 29 - CONTRACT ADMINISTRATION

Services of CONSULTANT shall be under the general direction of the **Chief Operations Officer**, or designee, who shall act as the AUTHORITY'S representative during the term of the Agreement.

ARTICLE 30 - KEY PERSONNEL

CONSULTANT shall notify AUTHORITY in the event of key personnel changes which might affect this Agreement. Notification shall be made within ten (10) days of said changes. AUTHORITY has the right to reject proposed changes in key personnel. The following personnel shall be considered key personnel:

_____ – Project Manager
Cell No.: XXX-XXX-XXXX E-Mail: _____

ARTICLE 31 – EQUAL BUSINESS OPPORTUNITY PROGRAM:

The Governing Board of the AUTHORITY has implemented the Economic Inclusion Policy administered by the Equal Business Opportunity (EBO) Program Office to ensure that all segments of its business population, including, but not limited to local, small, minority, and women-owned businesses, have an equitable opportunity to participate in the AUTHORITY'S procurement process, in accordance with Section 6.1 through 6.4 of the Purchasing Manual, which is hereby incorporated herein. Program tools and solicitation incentives are hereby referred to as the Affirmative Procurement Initiatives (API).

31.1 Affirmative Procurement Initiative (API):

The AUTHORITY has not applied an Affirmative Procurement Initiative to this Agreement. However, pursuant to SWA Board Policy, the AUTHORITY encourages the use and participation of S/M/WBE's in the performance of AUTHORITY contracts and agreements. This is encouraged on a voluntary basis only for this solicitation, use is not required.

31.2 S/M/WBE Reporting:

The CONSULTANT is encouraged, but not required to use S/M/WBE's on a voluntary basis wherever possible. In this regard, the CONSULTANT is encouraged to report to the AUTHORITY's EBO Office all payments made to sub-contractors or sub-consultants and suppliers promptly at the close-out of the Project.

31.3 Prompt Payment:

Upon execution of this contract by CONSULTANT, CONSULTANT shall be required to submit to AUTHORITY accurate payment information with each invoice regarding each of its Sub-consultants, if any, to ensure that the CONSULTANT's reported subcontract participation is accurate. CONSULTANT shall pay its Sub-consultants, if any, in compliance within timeframes set forth in accordance with the Florida Local Government Prompt Payment Act, or within ten (10) days of receipt of payment from the AUTHORITY, whichever is sooner.

ARTICLE 32 - SCRUTINIZED COMPANIES

32.1 As provided in F.S. 287.135, by entering into this Agreement or performing any work in furtherance hereof, the CONSULTANT certifies that it, its affiliates, suppliers, subcontractors and consultants who will perform hereunder, have not been placed on the Scrutinized Companies With Activities in Sudan List or Scrutinized Companies With Activities in The Iran Petroleum Energy Sector List created pursuant to F.S. 215.473, or is engaged in business operations in Cuba or Syria.

If the AUTHORITY determines, using credible information available to the public, that a false certification has been submitted by CONSULTANT, this Agreement may be terminated and a civil penalty equal to the greater of $2 million or twice the amount of this Agreement shall be imposed, pursuant to F.S. 287.135. Said certification must also be submitted at the time of renewal of this Agreement.

32.2 As provided in F.S. 287.135, by entering into this Agreement or performing any work in furtherance hereof, this Agreement certifies that it, its affiliates, suppliers, subcontractors and consultants who will perform hereunder,

have not been placed on the Scrutinized Companies that Boycott Israel List, or is engaged in a boycott of Israel, pursuant to F.S. 215.4725.

If the AUTHORITY determines, using credible information available to the public, that a false certification has been submitted by CONSULTANT, this may be terminated and a civil penalty equal to the greater of $2 million or twice the amount of this shall be imposed, pursuant to F.S. 287.135. Said certification must also be submitted at the time of renewal of this Agreement.

ARTICLE 33 - AGREEMENTS WITH OTHER GOVERNMENTAL ENTITIES

33.1 The CONSULTANT agrees that this Agreement constitutes an offer to all State and local government agencies of the State of Florida under the same terms and conditions, for the same prices and for the same effective period as specified in this Agreement should the CONSULTANT deem it in the best interest of their business to do so.

33.2 The Agreement in no way restricts or interferes with any State or local government agencies of the State of Florida from re-solicitation.

ARTICLE 34 – THIRD PARTY BENEFICIARY DISCLAIMER

It is not the intention of these documents to create third party beneficiary status in any person or entity that is not a direct party to this Agreement, and no language in this Agreement should be construed or interpreted as creating a third party beneficiary**.**

ARTICLE 35 – E-VERIFY – EMPLOYMENT ELIGIBILITY

35.1 The CONSULTANT certifies, warrants and represents that it is in compliance with Section 448.095, Florida Statutes, as may be amended and that CONSULTANT shall: (1) register with and use the E-Verify System (E-Verify.gov) to electronically verify the employment eligibility of all newly hired workers; and (2) has verified that all of the CONSULTANT'S subcontractors/subconsultants performing the duties and obligations of this Agreement are registered with and use the E-Verify System to electronically verify the employment eligibility of all newly hired workers. CONSULTANT shall obtain from each of its subcontractors/subconsultants an affidavit stating that the subcontractor/subconsultant does not employ, contract with, or subcontract with an Unauthorized Alien, as that term is defined in Section 448.095(1)(k), Florida Statutes, as may be amended. CONSULTANT shall maintain a copy of any such affidavit from a subcontractor/subconsultant for, at a minimum, the duration of the subcontract and any extension thereof. This provision shall not supersede any provision of this Agreement which requires a longer retention period.

35.2 AUTHORITY shall terminate this Agreement if it has a good faith belief that CONSULTANT has knowingly violated Section 448.09(1), Florida Statutes, as may be amended. If AUTHORITY has a good faith belief that one of CONSULTANT'S subcontractor/subconsultant has knowingly violated Section 448.09(1), Florida Statutes, as may be amended, AUTHORITY shall notify CONSULTANT to terminate its contract with the subcontractor/subconsultant and CONSULTANT shall immediately terminate its contract with the subconsultant. If AUTHORITY terminates this Agreement pursuant to the above, CONSULTANT shall be barred from being awarded a future contract by AUTHORITY for a period of one (1) year from the date on which the Agreement was terminated. In the event of such contract termination, CONSULTANT shall also be liable for any additional costs incurred by AUTHORITY as a result of the termination.

ARTICLE 36 – BUY AMERICA REQUIREMENTS

The CONSULTANT agrees to comply with the requirements of the Federal Buy America law (see 23 U.S.C. 313, ISTEA Sections 1041 (a) and 1048 (a), and FHWA's implementing regulations at 23 CFR 635.410, as they may be amended from time to time), as they related to Federal-aid contracts and the use of steel and iron produced in the United States. A description of the requirements of Buy America is set forth in Exhibit "D", which is attached hereto and incorporated by reference as part of this Agreement. CONSULTANT shall provide a certification statement regarding the origin of all materials or products covered under the Buy America provisions and used in its performance of the Agreement in accordance with the requirements of law and the AUTHORITY, FDOT, FHWA, and FEMA to the extent applicable.

ARTICLE 37 – DISADVANTAGED BUSINESS ENTERPRISES

37.1 The Agreement is subject to the requirements of 49 CFR Part 26. The CONSULTANT shall not discriminate on the basis of race, color, national origin, or sex in the performance of the Agreement. The CONSULTANT shall carry out the applicable requirements of 49 CFR Part 26 in the award and administration of this U.S. DOT – assisted contract. Failure by the CONSULTANT to carry out these requirements is a material breach of Agreement, which may result in the termination of this Agreement, which may result in the termination of this Agreement or such other remedy as the AUTHORITY deems appropriate, including but not limited to the withholding of payments. Each subcontract the CONSULTANT signs with a sub-consultant must include the assurance in this paragraph. (See 49 CFR 26.13). Upon request, the CONSULTANT will provide the AUTHORITY with a copy of each subcontract it enters into.

37.2 The CONSULTANT is required to pay its sub-consultants performing work related to this Agreement for satisfactory performance of that work no later than thirty (30) days after the CONSULTANT's receipt of payment for that work from the AUTHORITY. The CONSULTANT may not hold any retainage from its sub-consultants unless pursuant to an agreement approved by the AUTHORITY. The CONSULTANT shall return all retainage payments withheld within thirty (30) days after the sub-consultant's work has been satisfactorily completed.

37.3 The CONSULTANT shall, on a monthly basis, submit payment certifications, including a certification regarding their truth and accuracy, for all payments it is seeking and certifications from all sub-consultants indicating who has been paid and how. The certifications shall comply with all Federal and State requirements regarding the reporting of DBE participation. The CONSULTANT shall, if required by the AUTHORITY or FDOT, report its DBE participation monthly on the Equal Opportunity Reporting system located on the Florida Department of Transportation's (FDOT's) website found at www.fdot.gov/equalopportunity/dbesbeprograms.shtm. Audits may be conducted to review payments to DBE sub-consultants. The CONSULTANT will fully cooperate with the AUTHORITY, FDOT, FHWA or FEMA regarding the monitoring of sub-consultants and payments made thereto.

ARTICLE 38 – CERTIFICATION REGARDING SUSPENSION, AND DEBARMENT

38.1 This Agreement is a covered transaction for purposes of 49 CFR Part 29. Accordingly, the CONSULTANT shall verify that neither the CONSULTANT, nor its principals, as defined at 49 CFR 29.995, or affiliates, as defined at 49 CFR 29.905, are excluded or disqualified from participation in this Agreement as defined at 49 CFR 29.940 and 29.945.

38.2 The CONSULTANT agrees to comply with the requirements of 49 CFR 29, Subpart C throughout the term of this Agreement. The CONSULTANT must include the requirement to comply with 49 CFR 29, Subpart C in any lower tier covered transaction it enters into. CONSULTANT's certification is a material representation of fact relied upon by the AUTHORITY. If it is later determined that the CONSULTANT knowingly rendered an erroneous certification, in addition to remedies available to the AUTHORITY, the State or Federal government may pursue any available remedies, including but not limited to suspension and/or debarment. The

CONSULTANT further agrees that it will include a provision requiring such compliance in all of its subcontracts or lower tier covered transactions.

ARTICLE 39 – ACCESS TO RECORDS AND THEIR RETENTION

39.1 This provision shall supplement Article 26 of this Agreement. The CONSULTANT shall maintain adequate records to justify all charges, expenses, and costs incurred in estimating and performing the Agreement for at least five (5) years after completion or termination of this Agreement or FDOT's closure of an "emergency event" with the Florida Division of Emergency Management, whichever comes last, except in the event of litigation or settlement of claims arising from the performance of the Agreement, the CONSULTANT agrees to maintain said records until all litigation, claims, appeals or exceptions related thereto have been resolved. The records shall be maintained at a location in Palm Beach County, Florida or such other location in Florida approved by the AUTHORITY.

39.2 The CONSULTANT shall make all of its books, records, and other documents related, in any manner to its or its sub-consultants' performance of the Agreement, available to the AUTHORITY and any other funding entity (e.g., FDOT, FEMA, the Comptroller General of the U.S. or any of their authorized representatives) for the purpose of examination, audit, reproduction, excerpts and transcripts, during normal business hours, at the CONSULTANT's place of business or if CONSULTANT's place of business is not located in Palm Beach County, then at the location for maintenance of records referenced above. The CONSULTANT shall also require its sub-consultants to make their books, records, and documents available for examination, audit, reproduction, excerpts, and transcripts, for the same duration and in the same manner, and at or near the same locations required herein of CONSULTANT.

ARTICLE 40 – AUDIT REQUIREMENTS

This provision shall supplement Article 26 of the Agreement. The CONSULTANT agrees that audits may be undertaken of its records related to its performance of the Agreement as may be authorized or required under OMB Circular A-133, as revised. The CONSULTANT agrees that it will comply and fully cooperate with the AUTHORITY and any State and/or Federal funding agency(ies), including but not limited to FDOT, Florida's Auditor General, FEMA, or any of their authorized representatives, in any audit or monitoring procedures or processes any such entity(ies) may undertake related to CONSULTANT's performance of the Agreement.

ARTICLE 41 – NATIONAL ENVIRONMENTAL POLICY ACT (NEPA)

The CONSULTANT shall cooperate with the AUTHORITY, FDOT, and FEMA so as to assure that all activities related to the performance of this Agreement comply with the requirements of the National NEPA of 1969, as amended, and the regulations and guidance related thereto.

ARTICLE 42 – AMERICANS WITH DISABILITIES ACT

The CONSULTANT does hereby represent and certify that it will comply with all of the requirements of the Americans with Disabilities Act of 1990 (42 USC 12102, *et seq.*) as it may be amended, and all applicable implementing regulations of the U.S. DOT, FEMA and other Federal-aid agencies.

ARTICLE 43 – COMPLIANCE WITH TITLE VI, TITLE VII, AND OTHER FEDERAL LAWS AND REGULATIONS

The CONSULTANT does hereby represent and certify that it will comply with all the requirements imposed by Title VI of the Civil Rights Act of 1964 and Title VII of the Civil Rights Act of 1968, as they have been and may be modified from time to time (42 USC 2000d, *et. seq.* and 3601 *et. seq.*) and the Age Discrimination and Employment Act of 1967 and Section 303 of the Age Discrimination Act of 1975, as amended (42 USC 6102), and all applicable Federal laws and regulations, policies, procedures, and directives of the U.S. DOT, FEMA, and/or other Federal-aid agencies, as they may be promulgated and amended from time to time.

ARTICLE 44 – CONVICT LABOR PROHIBITION

The CONSULTANT does hereby represent and certify that it will comply with the convict labor prohibition in 23 U.S.C. 114, and all implementing regulations thereto.

REMAINDER OF PAGE LEFT BLANK INTENTIONALLY

In Witness Whereof, AUTHORITY, and CONSULTANT have made and executed this Agreement all as of the day and year first above written.

SOLID WASTE AUTHORITY OF PALM BEACH COUNTY:

WITNESS:

1. _____

2. _____

By: _____
Daniel Pellowitz
Executive Director

(SEAL)

APPROVED AS TO LEGAL SUFFICIENCY:

By: _____
Howard J. Falcon, III
General Counsel

APPROVED AS TO TERMS AND CONDITIONS:

_____
Signature

_____
Print Name

_____
Title

ATTEST:

_____
Corporate Secretary

WITNESS:

1. _____

2. _____

CONSULTANT:

_____
Authorized Signature

_____
Print Name

_____
Title

_____
Date

(Affix Corporate Seal)

SCOPE OF WORK

EXHIBIT "B"

FEE SCHEDULE

ATTACHMENTS CONTINUED

ATTACHMENT "B"

BUY AMERICA REQUIREMENTS

Source of Supply – Steel and Iron (Federal Aid Contracts Only): For Federal-aid contracts, the CONSULTANT will only use steel and iron produced in the United States, in accordance with the buy America provisions of 23 CFR 635.410. CONSULTANT will ensure that all manufacturing processes for these materials occur in the United States. A manufacturing process is any process that modifies the chemical content, physical shape, size or final finish of a product, beginning with the initial melding and mixing and continuing through the bending and coating stages. A manufactured steel or iron product is complete only when all grinding, drilling, welding, finishing and coating have been completed. If a domestic product is taken outside the United States for any process, it becomes foreign source material. When using steel and iron as a component of any manufactured product incorporated into the project (*e.g.*, concrete pipe, pre-stressed beams, corrugated steel pipe, etc.), these same provisions apply, except that the manufacturer may use minimal quantities of foreign steel and iron when the cost of such foreign materials does not exceed 0.1% of the compensation or $2,500, whichever is greater. These requirements are applicable to all steel and iron materials incorporated into the finished work, but are not applicable to steel and iron items that the CONSULTANT uses but does not incorporate into the finished work. The CONSULTANT shall provide a certification from the producer of steel or iron, or any product containing steel or iron as a component, stating that all steel or iron furnished or incorporated into the finished product was manufactured in the United States in accordance with the requirements of this provision. Such certification shall also include: (1) a statement that the product was produced entirely within the United States, or (2) a statement that the product was produced with the United States except for minimal quantities of foreign steel and iron and specify the actual value of the product. Each such certification shall be furnished to the AUTHORITY prior to incorporating the material into the project. When FHWA allows the use of foreign steel on a project, CONSULTANT shall furnish invoices to document the costs of such material, and obtain the AUTHORITY's written approval prior to incorporating the material into the project.

Village of Palm Springs

Executive Brief

AGENDA DATE: June 9, 2022

DEPARTMENT: Public Works

ITEM #4: Approve Hurricane Debris Removal Agreement (Contract No. 22-201A) - Piggyback - Ashbritt Inc.

SUMMARY: The Village needs to select a vendor to assist with debris removal services that would provide the Village with the immediate ability, following a disaster/storm event, to safely and efficiently clear storm-related debris from public rights-of-way and ensure/provide normal operations for our community as quickly as possible. Additionally, it is recommended that the Village's selection(s) meet the Office of Management and Budget's Procurement Guidelines to ensure eligible funding reimbursements requests are approved by the Federal Emergency Management Agency (FEMA) following a federally declared disaster event. Thus, reducing the potential that the Village will be responsible for the service of debris collection and disposal service costs.

To ensure that the Village selects a vendor(s) that enables the Village to receive eligible federal funding reimbursement(s) following a federally declared disaster event, the staff is recommending that the Village access/utilize the Palm Beach County Solid Waste Authority's (SWA) contract that has been awarded to Ashbritt, Inc. The selection by the Solid Waste Authority was completed through a competitive bid process - Request of Proposal for Hurricane/Disaster Debris Removal, Reduction, and Disposal (RFP No.22-201/DL - May 8, 2022).

If approved, the Village would use SWA's contract to obtain debris removal services (i.e public rights of way collection, loading, and hauling to a designated site accepting storm debris). Ashbritt, Inc. entered into a 5-year contract with the Solid Waste Authority and meets the federal procurement standards to ensure FEMA compliance to maximize eligible Hurricane-related expense reimbursement for the Village. The Village would accept the pricing of Ashbritt, Inc., accessing/utilizing the Palm Beach County Solid Waste Authority's contracts including all terms, conditions, and pricing therein. The term of the contract is set to expire on May 7, 2025.

The Village's Purchasing Code, Section 58-9, Accessing contracts of other government agencies, provides that the Village may award a contract by piggybacking or accessing the goods and/or services from any State of Florida contract; contracts of any Florida political subdivision; or from any other governmental entity (other than the Federal government); provided that the same or substantially similar goods and/or services were competitively solicited.

In the event of an emergency event, the Village Manager will select the contractor(s) to utilize from the approved vendors based on the availability of equipment and staff as well as the fee schedule. This authority will be requested as emergency power and the selection(s) will be presented to the Village Council for approval during the next available Council Meeting (following the storm event).

The proposed agreement was prepared by the Village Attorney and reviewed by the Parks and Recreation Director and Public Works Director.

FISCAL IMPACT:

Funding to support a natural disaster/storm event is available within the Village's Reserves and will be requested to be reimbursed by the Federal Emergency Management Agency (FEMA) following a federally declared disaster/storm event.

ATTACHMENTS:

1. Proposed Agreement - Ashbritt, Inc - Piggyback of SWA 2022
2. RFP No. 22-201/DL - Hurricane/Disaster Debris Removal, Reduction and Disposal - Addendum No. 1 - Solid Waste Authority of Palm Beach County
3. Ashbritt, Inc (2022) - Hurricane Disaster Debris Removal, Reduction and Disposal - Contract
4. RFP No. 22-201/DL - Hurricane/Disaster Debris Removal, Reduction and Disposal - Solid Waste Authority of Palm Beach County

AGREEMENT FOR DISASTER DEBRIS MANAGEMENT SERVICES

This Agreement for disaster debris management and support services ("Agreement" hereafter) is made as of the _____ day of _____, 2022, by and between the **Village of Palm Springs**, 226 Cypress Lane, Palm Springs, Florida 33461-1699, a municipal corporation organized and existing under the laws of the State of Florida, hereinafter referred to as the VILLAGE, and **Ashbritt, Inc.,** 565 East Hillsboro Blvd., Deerfield Beach, FL 33441, a corporation authorized to do business in the State of Florida, hereinafter referred to as the CONTRACTOR.

RECITALS

WHEREAS, the VILLAGE is in need of a contractor to provide the VILLAGE with disaster debris management and support services; and,

WHEREAS, the Solid Waste Authority of Palm Beach County through its competitive selection process awarded a Contract for disaster debris management and support services (22-201/DL) ("SWA Contract" hereafter) to the CONTRACTOR for substantially the same services sought by the VILLAGE; and,

WHEREAS, the VILLAGE requested and the CONTRACTOR has executed this Agreement with the VILLAGE for disaster debris management and support services based on the pricing and terms and conditions of the SWA Contract; and,

WHEREAS, the VILLAGE desires to accept CONTRACTOR's pricing by incorporating the SWA Contract including all terms, conditions and pricing therein into this Agreement.

NOW THEREFORE, in consideration of the mutual promises set forth herein, the receipt and sufficiency of which are hereby acknowledged, the parties hereto agree as follows:

1. Recitals. The parties agree that the recitals set forth above are true and correct and are fully incorporated herein by reference.

2. SWA Contract. The SWA Contract with the CONTRACTOR is hereby expressly made a part of this Agreement as fully as if set forth at length herein. The VILLAGE shall have all rights, obligations and remedies authorized to the Solid Waste Authority of Palm Beach County under the SWA Contract and all associated and applicable Contract Documents as defined therein.

3. Agreement. In accordance with the terms and conditions in the SWA Contract and pricing therein, the CONTRACTOR shall provide disaster debris management and support services as requested by the VILLAGE.

4. Contract Documents and Conflict of Terms and Conditions. The Contract Documents for this Agreement are compromised of the following:

A. All written modifications and amendments hereto;
B. This Agreement;

C. SWA Contract (including the RFP, Contractors Proposal and Contract).

The Contract Documents of this Agreement are intended to be complementary and interpreted in harmony so as to avoid conflict with the words and phrases interpreted in a manner consistent with managing debris removal and industry standards. In the event of any inconsistency, conflict or ambiguity between or among the Contract Documents of this Agreement, the Contract Documents of this Agreement shall take precedence in the following order:

A. All written modifications and amendments hereto;
B. This Agreement;
C. The SWA Contract.

5. Compensation to Contractor. Payments by the VILLAGE to the CONTRACTOR under this Agreement shall not exceed the amount of compensation, on the unit basis, as set forth under the SWA Contract.

6. Miscellaneous Provisions.

6.1 The VILLAGE and CONTRACTOR each binds itself, its partners, its successors, assigns and legal representatives to the other party hereto, its partners, successors, assigns and legal representatives in respect of all covenants, agreements and obligations contained in the Contract Documents.

6.2 CONTRACTOR shall maintain the insurance as required in SWA Contract applicable to the goods and services being delivered hereunder. Said insurance will name the VILLAGE as an additional insured.

6.3 Headings and References & Exhibits: The headings contained in this Agreement are inserted for convenience of reference only and shall not be a part or control or affect the meaning hereof. All references herein to Exhibits are to the exhibits hereto, each of which shall be incorporated into and deemed to be a part of this Agreement.

6.4 Counterparts: This Contract may be executed in two or more counterparts, each of which shall be deemed to be an original, but all of which shall be deemed to be an original, but each of which together shall constitute one and the same instrument.

6.5 Entire Agreement; Amendment and Waiver: This Agreement (together with the Exhibits hereto) supersedes any and all prior negotiations and oral or written agreements heretofore made relating to the subject matter hereof and, except for written agreements, if any, executed and delivered simultaneously with or subsequent to the date of this Agreement, constitutes the entire agreement of the parties relating to the subject matter hereof. This Agreement may not be altered or amended except by a writing signed by the parties hereto. No waiver of any of the terms or conditions of this Agreement shall be effective unless in writing and executed by the party to be changed therewith. No waiver of any condition or of the breach of any term, covenant, representation, warranty or other provision hereof shall be deemed to be construed as a further or continuing waiver of any such condition or

breach or a waiver of any other condition or of any breach of any other term, covenant, representation, warranty or other provision contained in this Agreement.

6.6 Successors and Assigns: This Agreement shall be binding upon, and shall inure to the benefit of the parties hereto and their respective successors and assigns.

6.7 Governing Law; Consent to Jurisdiction: This Agreement shall be governed by and construed and interpreted in accordance with the laws of the State of Florida. Each of the parties hereto (a) irrevocably submit itself to the exclusive jurisdiction of the Fifteenth Judicial Circuit Court in and for Palm Beach County, Florida for state actions and jurisdiction of the United States District Court for the Southern District of Florida, Palm Beach Division, for the purposes of any suit, action or other proceeding arising out of, or relating to, this Agreement; (b) waives and agrees not to assert against any party hereto, by way of motion, as a defense of otherwise, in any suit, action or other proceeding, any claim that it is not personally subject to the jurisdiction of the above-named courts for any reason whatsoever; and (ii) to the extent permitted by applicable law, any claim that such suit, action or proceeding by any part hereto is brought in an inconvenient forum or that the venue of such suit, action or proceeding is improper or that this Agreement or the subject matter hereof may not be enforced in or by such courts.

6.8 Third Party Beneficiary rights: This Agreement shall create no rights or claims whatsoever in any person other than a party herein.

6.9 Severability: If any one or more of the provisions of the Agreement shall be held to be invalid, illegal or unenforceable in any respect, the validity, legality and enforceability of the remaining provisions hereof shall not in any way be affected or impaired thereby.

6.10 Effective date, term and renewal: The effective date of this Agreement is the date the Agreement is approved by the Village Council. The term of this Agreement shall be for an initial term to mirror the SWA Contract term which shall expire on May 7, 2025, unless terminated sooner. The SWA Contract is subject to a one year renewal, and if renewed the VILLAGE also has the right to renew this Agreement for a one year period.

6.11 Public Records**:** Public Records**:** CONTRACTOR shall comply with Florida's Public Records Act, Chapter 119, Florida Statutes, and, if determined to be acting on behalf of the VILLAGE as provided under section 119.011(2), Florida Statutes, specifically agrees to:

(a) Keep and maintain public records required by the VILLAGE to perform the service.

(b) Upon request from the VILLAGE's custodian of public records or designee, provide the VILLAGE with a copy of the requested records or allow the records to be inspected or copied within a reasonable time at a cost that does not exceed the cost provided in Chapter 119, Florida Statutes, or as otherwise provided by law.

(c) Ensure that public records that are exempt or confidential and exempt from public records disclosure requirements are not disclosed except as authorized by law for the duration of this Agreement and following completion of this Agreement if the

CONTRACTOR does not transfer the records to the VILLAGE.

(d) Upon completion of this Agreement, transfer, at no cost, to the VILLAGE all public records in possession of the CONTRACTOR or keep and maintain public records required by the VILLAGE to perform the service. If the CONTRACTOR transfers all public records to the VILLAGE upon completion of the Agreement, the CONTRACTOR shall destroy any duplicate public records that are exempt or confidential and exempt from public records disclosure requirements. If the CONTRACTOR keeps and maintains public records upon completion of the Agreement, the CONTRACTOR shall meet all applicable requirements for retaining public records. All records stored electronically must be provided to the VILLAGE, upon request from the VILLAGE's custodian of public records or designee, in a format that is compatible with the information technology systems of the VILLAGE.

IF THE CONTRACTOR HAS QUESTIONS REGARDING THE APPLICATION OF CHAPTER 119, FLORIDA STATUTES, TO THE CONTRACTOR'S DUTY TO PROVIDE PUBLIC RECORDS RELATING TO THIS AGREEMENT, CONTACT THE CUSTODIAN OF PUBLIC RECORDS OR DESIGNEE AT 561-434-5084, jworth@vpsfl.org, OR BY MAIL AT VILLAGE OF PALM SPRINGS, 226 CYPRESS LANE, PALM SPRINGS, FL 33461.

6.12 Preparation: This Agreement shall not be construed more strongly against either party regardless of who was more responsible for its preparation.

6.13 PALM BEACH COUNTY IG: In accordance with Palm Beach County ordinance number 2011-009, the CONTRACTOR acknowledges that this Agreement may be subject to investigation and/or audit by the Palm Beach County Inspector General. The CONTRACTOR has reviewed Palm Beach County ordinance number 2011-009 and is aware of its rights and/or obligations under such ordinance.

6.14 All notices required in this Agreement shall be sent by certified mail, return receipt requested, and sent to the addresses appearing on the first page of this Agreement.

6.15 The VILLAGE is exempt from payment of Florida State Sales and Use Tax. The CONTRACTOR shall not be exempted from paying sales tax to its suppliers for materials used to fill contractual obligations with the VILLAGE, nor is the CONTRACTOR authorized to use the VILLAGE'S Tax Exemption Number in securing such materials.

7. Indemnification. CONTRACTOR shall indemnify and hold harmless the VILLAGE in the same manner as provided in the SWA Contract as it relates to the indemnification of the Solid Waste Authority of Palm Beach County.

8. Agreement Administration. Services of the CONTRACTOR shall be under the general direction of the Village Manager, or his/her designee, who will act as the VILLAGE'S representative during the term of the Agreement.

9. E-Verify Pursuant to Section 448.095(2), Florida Statutes, effective January 1, 2021, the CONTRACTOR shall:

9.1 Register with and use the E-Verify system to verify the work authorization status of all newly hired employees and require all subcontractors (providing services or receiving funding under this Agreement) to register with and use the E-Verify system to verify the work authorization status of all the subcontractors' newly hired employees;

9.2 Secure an affidavit from all subcontractors (providing services or receiving funding under this Agreement) stating that the subcontractor does not employ, contract with, or subcontract with an "unauthorized alien" as defined in Section 448.095(1)(k), Florida Statutes;

9.3 Maintain copies of all subcontractor affidavits for the duration of this Agreement and provide the same to the Owner upon request;

9.4 Comply fully, and ensure all of its subcontractors comply fully, with Section 448.095, Florida Statutes;

9.5 Be aware that a violation of Section 448.09, Florida Statutes (Unauthorized aliens; employment prohibited) shall be grounds for termination of this Agreement; and,

9.6 Be aware that if the VILLAGE terminates this Agreement under Section 448.095(2)(c), Florida Statutes, the CONTRACTOR may not be awarded a contract for at least one (1) year after the date on which the Agreement is terminated and will be liable for any additional costs incurred by the VILLAGE as a result of the termination of the Agreement.

IN WITNESS WHEREOF, the VILLAGE and CONTRACTOR have caused this Agreement to be executed the day and year shown above.

VILLAGE OF PALM SPRINGS, FLORIDA

By: _____
Bev Smith, Mayor

ATTEST

_____
Kimberly Wynn, Village Clerk

Approved as to form and legal sufficiency:

_____
Glen J. Torcivia, Village Attorney

CONTRACTOR: **ASHBRITT, INC.**

By: _____

Print Name: _____

Title: _____

[Corporate Seal]

STATE OF FLORIDA)
COUNTY OF _____)

The foregoing instrument was acknowledged before me this _____ day of _____, 2017 by_____, as _____ of Ashbritt, Inc., a corporation authorized to do business in the State of Florida, and who is personally known to me or who has produced the following _____ as identification.

Notary Public

_____
Print Name: _____
My commission expires:_____

YOUR PARTNER FOR
SOLID WASTE SOLUTIONS

ADDENDUM NO. 1

HURRICANE/DISASTER DEBRIS REMOVAL, REDUCTION AND DISPOSAL

RFP No. 22-201/DL **February 9, 2022**

This Addendum to the specifications and contract documents is issued to provide additional information and clarification to the original RFP's scope of services and proposal form and is hereby declared a part of the original scope of services and contract documents. In case of a conflict, this Addendum shall govern.

PROPOSERS shall acknowledge receipt of this Addendum by inserting this Addendum Number and Date issued within Proposal Form 1 – Transmittal Letter located within the original RFP document. Failure to do so may be cause for the PROPOSER to be rendered as non-responsive.

REMINDER:

SUBMISSION DUE DATE: FEBRUARY 18, 2022

SUBMISSION DEADLINE: 2:00PM

VIA NEGOMETRIX

1. The following are questions received prior to the deadline on Tuesday, February 7, 2022:

   Q.1: Section 11 – Bond Requirements, Sections A & B, provide the guidance for providing all bonds. For clarification purposes, section A states that the proposer must submit an Irrevocable Letter of Commitment from an A-or better-rated Surety Company to provide a $10,000,000 Performance & Payment Bond. Section B discusses when the Performance and Payment bond is to be provided to the Authority; when that time comes, will the Performance and Payment Bond need to be in the amount of $10,000,000, or will it be based on the estimated value of the project at that time?

   A.1: Please refer to Article 40 of the sample contract.

   Q.2: Can you please provide the names and titles of the Evaluation Committee members?

   A.2: Dr. Lori Vinikoor, Citizens' Advisory Committee Chair
   Patrick Carroll, Chief Operations Officer
   Mariana Feldpausch, CIS Operations Manager
   Colleen Robbs, Director of Equal Business Opportunity Office
   David Broten, Environmental Programs Manager

   Q.3: Could you clarify if the pricing provided for removing hazardous trees 12" in diameter or greater is for cutting the trees and placing them in the right-of-way to be collected as vegetative debris, or is it for the cutting, loading & hauling of the hazardous trees?

   A.3: Please refer to attached revised page REV16, Section 2.6.2.1.

   Q.4: Section 2.6.4 Securing Debris – Are we to understand that all loads of debris en route to a TDMS must be tarped or covered in some manner?

   A.4: Please refer to the attached revised pages REV19 and REV 20.

Q.5: Proposal Form 3 Pricing Proposal – Tipping fees are usually billed by the Contractor separately, at cost, with no markup; however, Line Item 4 calls for the rate to include disposal cost; by this, do you mean to include any tipping fees in our proposed rate?

A.5: Proposal Form 3 – Price Proposal, Part A, Item 4.0 requires the Proposer to include the disposal/recycling cost per cubic yard for the final destination of reduced yard waste debris. This rate and the final destination plan for wood chips is required under Part III, Proposal Submission Requirements, Section 3.2.6 General Operations Plan, Item 1, Mulch Disposal Plan.

Q.6: RFP Part II – Statement of Work states in Section 2.6.2.1 that the Authority will not compensate the Contractor for leaning trees less than 12" in diameter on a unit rate basis. Yet, Proposal Form 3 requests pricing for Hazardous Tree Removal and Hauling with one size category being 6" to 12.99" in diameter. Could you please clarify?

A.6: Please refer to attached revised page REV 16.

Q.7: On pg 34 it states that "PROPOSER who submits the Proposal with the lowest Total Proposal Price will receive 20 points." Can the Authority please confirm this is referring to the Total Proposed Price on Part A of the RFP Proposal Form 3?

A.7: Yes, Proposer with the lowest Total Proposal Price from Proposal Form 3 - Price Proposal, Part A, will receive 20 points.

Q.8: Will the Authority weigh the unit rate line items in Part A and C of the RFP Proposal Form 3 more heavily than the hourly rate line items in Part B of the RFP Proposal Form 3?

A.8: Proposal Form 3 – Price Proposal Total Proposal Price will be weighed for the Evaluation of Price Proposal as per page 32 of RFP.

Q.9: We are curious why the Authority did not apply an Affirmative Procurement Initiative to this procurement requiring S/M/WBE participation. Could you provide insight?

A.9: All work performed under this contract is to be in conformance with FEMA guidelines. These guidelines prohibit the use of locally based S/M/WBE programs. The Solid Waste Authority system is a locally based system and therefore, cannot be applied to this procurement. The Authority does encourage the use of S/M/WBE vendors in section 3.8.2 (C) of the RFP.

Q.10: Bonding Requirements: Regarding bonding requirements: Per Page 4, paragraph B of the RFP, the proposal bond must be in effect until any active-duty periods when the payment and performance bonds will take the place of proposal bond. Please clarify if the proposal bond must stay in effect for the entire 3-year term and possible 3-year renewal term even if the contract is never activated?

Page 4, paragraph A of the RFP states that the Proposer must submit an "Irrevocable Letter of Commitment" with the Proposal Bond "upon issuance of first Task Order. Given the amount/cost of bond and the length of the term, would the SWA be willing to revise the bonding requirement to read "letter of bonding ability" or "letter of bonding capacity" instead of "irrevocable letter of commitment"?

A.10: Yes, the proposal bond must stay in effect for the entire 3-year term and possible 3-year extension if the contract is never activated.

There will be no change to the irrevocable letter of commitment requirement.

Q.11: TDMS Bonus Points: How far away is a TDMS that would be eligible for the bonus points?

A.11: Please refer to attached revised page REV 29.

Q.12: Haul out of Ash: 1. There is currently a line item (5.0) for reduction of vegetation through air curtain incineration. Will the Authority consider adding a line item for haul out of ash to a final disposal site? 2. If no, under what line item should this be included? 3. If a new line item is added, can the Authority confirm it will be responsible for disposal fees for ash?

A.12: Please refer to the attached revised page REV 39.

Q.13: RFP: Please confirm the entire RFP does not need to be included in our proposal submittal.
A.13: It is solely at the Proposer's discretion as to the documents considered as proposal submittal.

2. **Pages 16, 19, 20, and 29, of the RFP have been revised and are hereby attached as REV 16, REV 19, REV 20, and REV 29.**

3. **PROPOSAL FORM 3 – PRICE PROPOSAL PART A AND PART C have been revised and is hereby attached as REV 39 and REV 41.**

ALL ELSE REMAINS THE SAME

Diane LeRay

Diane LeRay, CPPO, CPPB
Procurement Manager

2.6.2.1 Removal of Hazardous Leaning Trees and Hanging Limbs

a) Under this contract, work shall consist of all labor, equipment, fuel, and miscellaneous costs necessary to remove all hazardous trees six inches (6") or greater in diameter, measured four and a half feet (4.5') from the base of the tree or chest height and hanging limbs two inches (2") or greater in diameter existing in private and public right-of-way. Further, debris generated from the removal of hazardous trees and hanging limbs two inches (2") or greater existing in private and public right-of-way will be placed at the public right-of-way for removal as vegetative debris in accordance with Proposal Form 3, Price Proposal, Part A, Item 1.0A. Hazardous leaning trees less than six inches (6") in diameter, measured four and a half feet (4.5') from the base of the tree or at chest height, will be flush cut, and placed on the public right-of-way to be removed as vegetative debris. The AUTHORITY will not compensate the CONTRACTOR for leaning trees less than six inches (6") in diameter on a unit rate basis.

b) Removal and transportation of hazardous trees six inches (6") or greater in diameter and hanging limbs two inches (2") or greater in diameter existing in private and public right-of-way will be performed as identified by the AUTHORITY. All disaster specific eligibility guidelines regarding size and diameter of leaning trees will be communicated to the CONTRACTOR, in writing, by the AUTHORITY. In order for leaning or hazardous trees to be removed and eligible for reimbursement, the tree must satisfy a minimum of one (1) of the following requirements:

i) The tree is leaning in excess of 30° degrees in a direction that poses an immediate threat to public health, welfare, and safety.
ii) The tree is dead, twisted, or mangled as a direct result of the storm and a certified arborist can attest to the fact that the tree will die and potentially create a falling hazard to the public.

2.6.2.2 Removal of Hazardous Stumps

a) Under this contract, work shall consist of all labor, equipment, fuel, and miscellaneous costs necessary to remove all hazardous uprooted stumps 24 inches or greater in diameter, measured 24 inches from the base of the tree existing in private and public right-of-way. Further, debris generated from the removal of uprooted stumps existing in private and public right-of-way will be placed at the public right-of-way for removal as vegetative debris. Stumps measured 24 inches from the base of the tree and less than 24 inches in diameter will be considered normal vegetative debris and removed in accordance with with Proposal Form 3, Price Proposal, Part A, Item 1.0A. The AUTHORITY will not compensate hazardous stumps less than 24 inches in diameter on a unit rate basis and instead will be considered normal vegetative debris. The diameter of stumps less than 24 inches will be converted into a cubic yardage volume based on the published FEMA stump conversion table (In accordance with current FEMA public assistance guidelines) and removed under the terms and conditions of 2.6.2.

to be filled to capacity. Cyclone fence may be used as temporary tailgates if they comply with the following specifications:

1. Fencing must be permanently attached to one side of the truck bed.
2. After loading, the fencing must be tied to the other side of the truck bed at two places with heavy gauge wire.
3. Fencing must extend to the bottom of the bed.
4. After loading, bottom of fencing shall be tight against the bed of the truck and secured at a minimum of two locations.
5. Solid iron metal bars must be secured to both sides of the fencing.
6. There shall be no hand loaded equipment allowed.

B. The AUTHORITY or designee shall complete certifications indicating the type of vehicle, make and model, license plate number, equipment number, and measured maximum volume, in cubic yards, of the load bed of each piece of equipment utilized to haul debris. The measured volume of each piece of equipment shall be calculated from actual internal physical measurement performed and certified by the CONTRACTOR. Maximum volumes may be rounded up to the nearest cubic yard. The reported measured maximum volume of any load bed shall be the same as shown on the placards affixed to each piece of equipment. The AUTHORITY reserves the right to re-measure trucks and trailers at any time to verify reported capacity. If a truck and/or trailer are re-measured and the yardage capacity is determined to be lower, the lower yardage volume will be retroactive to the initial load and total volume adjusted accordingly.

C. All trucks and trailers utilized in hauling debris shall be equipped with a tailgate that will permit the vehicle to be loaded to capacity and effectively contain the debris on the vehicle while hauling. If installed, all sideboard extensions must remain in place throughout the operation, or the vehicle must be re-measured and remarked. All extensions to the bed are subject to acceptance or rejection at the sole discretion of the AUTHORITY or designee.

D. Trucks or equipment designated for use under this Agreement shall not be used for any other work during working hours. The CONTRACTOR shall not solicit work from private citizens or others to be performed in the designated Collection Service Area during the period of this Agreement. Under no circumstance will the CONTRACTOR mix debris hauled for others with debris hauled under this Agreement. Failure to comply will result in no payment to CONTRACTOR and the operator and vehicle will be declared ineligible to provide any additional emergency debris collection services. Any and all unapproved changes to placard will result in no payment to CONTRACTOR and the operator and vehicle will be declared ineligible to perform any additional emergency debris collection services.

2.6.4 Securing Debris

The CONTRACTOR shall be responsible for properly and adequately securing debris on each piece of equipment utilized to haul debris. Prior to leaving the loading site, the CONTRACTOR shall ensure that each load is secure and trimmed so that no debris extends horizontally beyond the bed of the equipment in any direction. All loose debris shall be reasonably compacted during loading and secured during transport.

2.6.5 Equipment Signage

Prior to commencing operations, the AUTHORITY or designee shall affix to each piece of equipment, signs or markings indicating the Owner Operator's name and a unique equipment identification number. One sign shall be placed on each side of the equipment. For those trucks, trailers and other equipment intended to haul debris, the maximum volume, in cubic yards, of the load bed shall also be shown. Each operator shall keep AUTHORITY certification with them at all times. Placards must remain on both sides of equipment.

2.6.6 Other Considerations

A. The CONTRACTOR shall assign and provide an Operations Manager (OM) to the AUTHORITY TDMS to serve as the principal liaison between the AUTHORITY Director, Customer Services or designee and the CONTRACTOR'S forces. The assigned OM must be knowledgeable of all facets of the CONTRACTOR'S operations and have authority in writing to commit the CONTRACTOR. The OM shall be on call 24 hours per day, seven (7) days per week and shall have electronic linkage capability for transmitting and receiving relevant contractual information and make arrangements for onsite accommodations. This linkage shall provide immediate contact via cell phone, Fax machine, and have Internet capabilities. The OM will participate in daily meetings and disaster exercises, functioning as a source to provide essential element information. The OM will report to the AUTHORITY Director, Customer Services or designee. This position will not require constant presence; rather the OM will be required to be physically capable of responding to the AUTHORITY Emergency Management Coordinator within 30 minutes of notification.

B. The CONTRACTOR shall be responsible for control of pedestrian and vehicular traffic in the work area. At a minimum, one flag person should be posted at each approach to the work area.

C. The CONTRACTOR shall supervise and direct the work, using skilled labor and proper equipment for all tasks. Safety of the CONTRACTOR'S personnel and equipment is the responsibility of the CONTRACTOR. Additionally, the CONTRACTOR shall pay for all materials, personnel, taxes, and fees necessary to perform under the terms of this contract.

D. Payment for debris hauled will be based on the quantity of debris hauled in cubic yards. Debris hauled to a TDMS will require a validated load ticket. Drivers will be given an electronic load tickets at the loading site by an AUTHORITY loading site monitor. The quantity of debris hauled will be estimated in cubic yards at the TDMS by an AUTHORITY TDMS monitor. The estimated quantity will be recorded on the electronic load ticket. The AUTHORITY TDMS monitor will retain one copy of the paper load ticket and the driver will retain the remaining copies of the load ticket. Debris being hauled to

3.2.5 Experience and Qualifications Narrative

PROPOSER shall demonstrate the following:

A. Provide a comprehensive description of all mobilizations (minimum of three) performed as a prime contractor for disaster debris services collecting and processing a minimum of 1 million cubic yards of debris collected from public right of ways. PROPOSERS unable to identify three or more mobilizations meeting the 1 million cubic yard threshold, per each mobilization, are requested to submit all relevant experience they have that documents the ability to perform the services (right of way collection and TDMS management) as requested by this RFP. No limitation exists for the period of time a PROPOSER may go back to describe the experience as requested. Do not show work performed as a sub-contractor. **(PROPOSAL FORM 6 - FORM A)**

   For each mobilization the PROPOSER is requested to identify the following:

   - Name and type of storm event
   - Date and location
   - Narrative of disaster debris services of work performed during mobilization event
   - Total value of contract for services performed
   - Number of cubic yards of debris collected by PROPOSER from public right of ways during mobilization
   - Number of cubic yards of debris handled by PROPOSER at TDMS during mobilization
   - Name, address, and telephone number of customers point of contact for reference purposes.

B. List all emergency debris removal and disposal contracts performed in the last three (3) years as a prime contractor. **(PROPOSAL FORM 6 - FORM B)**

3.2.6 General Operations Plan

PROPOSER shall provide the following:

1. At a minimum a detailed Mulch Disposal Plan. The AUTHORITY is committed to recycling and or beneficial re-use of mulch. Additional consideration will be taken for Beneficial Re-Use Plan. PROPOSER is required to provide a full description of how PROPOSER intends to dispose and or re-use one million (1,000,000) cubic yards of mulch. PROPOSER is required to address how PROPOSER intends to comply with all federal, state, and local guidelines pertaining to mulch disposal. PROPOSER is also required to submit any agreement(s) he/she currently has for the disposal and or beneficial re-use of mulch. PROPOSER is required to give a full description of their end use plan.

2. At a minimum a detailed TMDS Plan pertaining to Construction Debris (C & D) Recycling and or Reduction for estimated five hundred thousand (500,000) cubic yards. The AUTHORITY requests that PROPOSER implements a recycling and/or reduction program for C & D material to minimize amount of debris that will go to a landfill. PROPOSER is requested to address programs they will implement to facilitate recycling and or reduction of construction debris waste.

3. Resumes for the PROPOSER'S management team and all key personnel who will be assigned to the agreement to include, among other things: names, job titles, responsibilities, and applicable debris management experience.

4. Provide private TDMS available for use within Palm Beach County. Provide letters of agreements with the owners for use of such sites. Identify the location of the sites and site

PROPOSAL FORM 3 – PRICE PROPOSAL

PART A – VOLUME BASED PRICING FOR 3,000,000 CUBIC YARD (CY) DEBRIS DISASTER

ITEM/DESCRIPTION	ESTIMATED QUANTITY	UNIT	PRICE PER CY	EXTENSION
1.0 Public Property and Right of Way Collection, Loading and Hauling to a designated TDMS.				
A. Vegetation	2,500,000	CY		
B. Construction Debris / Mixed Debris	500,000	CY		
2.0 TDMS operation to include placement of monitoring towers, portable toilets, keeping on-site and adjacent roads area clean of trash and garbage, debris acceptance, pile management, and Phase I Reclamation.	3,000,000	CY		
3.0 Processing of debris through grinding and/or chipping.	2,500,000	CY		
4.0 Loading, hauling and disposing wood chips to final destination. ***(This rate includes disposal cost)***	1,000,000	CY		
5.0 Loading and hauling of construction debris and/or mixed debris from TDMS to a permitted C&D recycling facility or any other designated Disposal Facility. ***(This rate <u>shall not</u> include disposal cost). Based on miles from TDMS to final destination– 1 way.***				
A. 0 ≤ 20 miles	500,000	CY		
B. > 20 ≤ 50 miles	500,000	CY		
C. > 50 ≤ 100 miles	500,000	CY		
AVERAGE: (Item 6.0 A-C)				
AVERAGE: (Item 5.0 A-C) **X 500,000** CY =				$
TOTAL PROPOSAL PRICE: (Items 1.0 - 5.0)				$

PROPOSER MUST PROVIDE PRICE FOR ALL LINE ITEMS 1 THRU 6. FAILURE TO DO SO MAY RENDER YOUR PROPOSAL TO BE DEEMED NON-RESPONSIVE.

Unit Prices, unless otherwise indicated, shall include all labor (operators, laborers, supervisors) and materials including but not limited to: supplies, equipment maintenance, repairs, repair parts, fuels, lubricants, cellular phones, transportation, and housing, if required, necessary to accomplish the project. The quantities and distributions are estimated for the purpose of making an award. Locations of sites, debris quantities, destinations, material densities, etc. may differ substantially in an actual disaster.

Assumptions: 3,000,000 cubic yards of debris consisting of 2,500,000 cubic yards of vegetation debris and 500,000 cubic yards of mixed debris.

PROPOSAL FORM 3 – PRICE PROPOSAL

PART C – UNIT COST SCHEDULE

ITEM	HAZARDOUS STUMP REMOVAL, HAULING, AND DISPOSAL	UNIT	UNIT COST
1.	24-inch diameter to 48.99-inch diameter	Stump	
2.	49-inch diameter and greater	Stump	
3.	Stump Fill Dirt – Fill dirt for stump holes after removal	CY	
	HAZARDOUS HANGING LIMBS (HANGERS) To include removal of all hanging limbs. Limbs to be cut and placed on the right of way for collection as vegetative debris.		
4.	2-inch diameter and greater	Tree	
	HAZARDOUS TREE REMOVAL Trees to be flush cut at ground level and placed on the right of way for removal as vegetative debris.		
5.	6-inch diameter to 11.99-inch diameter	Tree	
6.	12-inch diameter to 23.99-inch diameter	Tree	
7.	24-inch diameter to 35.99-inch diameter	Tree	
8.	36-inch diameter to 47.99-inch diameter	Tree	
8.	48-inch diameter and greater	Tree	

NOTE:
The following is information only and will NOT be considered in the evaluation of this RFP

The AUTHORITY reserves the right to use this contract to handle small quantities of debris removal and as support for our Franchise Contracts as needed. Below is a daily rate to remove debris. The AUTHORITY will pay for the disposal cost. There is no requirement to provide a rate, however if you do, we expect your company to honor this special service and respond within 48 hours at the rate below.

COLLECTION SERVICE ONLY	
EQUIPMENT	DAILY RATE (10 HRS/DAY)
Knuckleboom Loader and Operator	$

YOUR PARTNER FOR
SOLID WASTE SOLUTIONS

AGREEMENT FOR

HURRICANE/DISASTER DEBRIS REMOVAL, REDUCTION AND DISPOSAL

BETWEEN

SOLID WASTE AUTHORITY OF PALM BEACH COUNTY

AND

ASHBRITT, INC.

AGREEMENT NO. 22-201A

SOLID WASTE AUTHORITY OF PALM BEACH COUNTY
7501 NORTH JOG ROAD
WEST PALM BEACH, FLORIDA 33412
(561) 640-4000

TABLE OF CONTENTS

ARTICLE		PAGE
1.	Effective Date and Incorporation of Recitals	1
2.	Services to be performed by Contractor	1
3.	Compensation	1
4.	Insurance	2
5.	Standard of Care	3
6.	Indemnification	3
7.	Independent Contractor	3
8.	Authority to Conduct Business	4
9.	Compliance with Laws	4
10.	Sub-Contractor	4
11.	Federal and State Taxes	4
12.	Availability of Funds	4
13.	Authority's Responsibilities	4
14.	Default	4
15.	Termination for Convenience	5
16.	Uncontrollable Forces	5
17.	Jurisdiction, Venue, Waiver of Jury Trial and Remedies	5
18.	Commercial Non-Discrimination Policy	5
19.	Waiver	6
20.	Severability	6
21.	Entirety of Agreement and Modification	6
22.	Successors and Assigns	7
23.	Contingent Fees	7
24.	Truth-in-Negotiation Certificate	7
25.	Ownership of Documents	7
26.	Public Records, Access and Audits	7
27.	Inspector General	9
28.	Notice	9
29.	Contract Administration	10
30.	Key Personnel	10
31.	Equal Business Opportunity Program	10
32.	Scrutinized Companies	11
33.	Agreements with other Governmental Entities	11
34.	Third Party Beneficiary Disclaimer	11
35.	E-Verify – Employment Eligibility	11
36.	Confidentiality	12
37.	Payment Adjustment Schedule	12
38.	Order of Agreement Activation/Location Assignment	13
39.	Task Order/Performance	13
40.	Bonds	14
41.	Florida Highway Administration (FHWA) Form 1273	14
42.	Buy America Requirements	14
43.	Disadvantaged Business Enterprises	14
44.	Certification Regarding Suspension and Debarment	15
45.	Access to Records and Their Retention	15
46.	Audit Requirements	16
47.	National Environmental Policy Act (NEPA)	16

48. Americans with Disabilities Act 16
49. Compliance with Title VI, Title VII and other Federal Laws and Regulations 16
50. Convict Labor Prohibition 16
51. Certification Regarding Lobbying Activities 16
52. DHS Seal, Logo, and Flags 16
53. No Obligation by Federal Government 16
54. Program Fraud and False or Fraudulent Statement or Related Acts 17
Contract Execution 18

EXHIBITS

A. Scope of Work 19
B. Fee Schedule 36

ATTACHMENTS

A. Task Order Disaster Debris Management 39
B. Pre-Approved Temporary Debris Management Sites Map 40
C. Public Assistance Program and Policy Guide 41
D. Mobilization Schedule 42
E. FHWA Form 1273 43
F. Buy America Requirements 55
G. Performance and Payment Bond 56

AGREEMENT FOR PROFESSIONAL SERVICES

This Agreement is made and entered into as of APRIL 28th, 2022, (hereinafter referred to as the Agreement) by and between **Solid Waste Authority of Palm Beach County**, a dependent special district created by Chapter 2001-331, Laws of Florida, as amended, (hereinafter referred to as AUTHORITY) and **ASHBRITT, INC.,** (hereinafter referred to as CONTRACTOR and when referred to collectively with AUTHORITY, the Parties), a Corporation, whose Federal Employer ID Number is **90-0868875**;

Whereas, in accordance with the AUTHORITY's Request for Proposals No. 22-201/DL, solicited to employ the services of the CONTRACTOR for the purpose of providing Hurricane/Disaster Debris Removal, Reduction and Disposal, and;

Whereas, CONTRACTOR represents it is qualified, capable and prepared to provide such services.

Now, therefore, in consideration of the promises contained herein and other good and valuable consideration, the receipt of which is acknowledged by the other, the parties hereto agree as follows:

ARTICLE 1 - EFFECTIVE DATE AND INCORPORATION OF RECITALS

The foregoing recitals are hereby incorporated herein by reference.

1.1 The Effective Date of this Agreement shall be **May 8, 2022** and the Initial Term of this Agreement is for three (3) years and shall expire on **May 7, 2025,** unless terminated earlier as provided for herein.

1.2 The AUTHORITY shall have the option of extending this Agreement for three (3) additional years, as approved by the AUTHORITY's Board or designee, in its sole and unfettered discretion, on the same terms and conditions. Such extension shall be in the form of a written Amendment to the Agreement executed by both Parties.

1.3 The continuance of this Agreement from year-to-year is contingent upon successful annual recertification of the CONTRACTOR's capabilities. The recertification process will be a review of the fiscal (bankruptcy, etc.), logistical (equipment availability, etc.), and moral (conviction for environmental crime, conviction for crime against a public entity, etc.) responsibility of the CONTRACTOR and a determination by the AUTHORITY, based on this review, of whether or not the CONTRACTOR continues to be a viable firm to provide the services described in this Agreement.

ARTICLE 2 - SERVICES TO BE PERFORMED BY CONTRACTOR

CONTRACTOR shall perform the services as specifically stated in the Scope of Work, attached hereto and made a part hereof as Exhibit A, and/or as may be specifically designated and authorized by the AUTHORITY. Such authorizations will be referred to as Task Orders. Each Task Order shall set forth a specific scope of services, rate/amount of compensation, completion date, and other pertinent details of the task being authorized. The AUTHORITY, by virtue of this Agreement, gives the CONTRACTOR no guarantee of any work/services or any specific amount of work/services that may be accomplished during the period this Agreement is in full force and effect.

ARTICLE 3 - COMPENSATION

3.1 The AUTHORITY shall pay CONTRACTOR in accordance with the Fee Schedule, attached hereto and made a part hereof as Exhibit B. In addition, the Parties may negotiate a lump sum or not-to-exceed amount on a per-project basis on an individual Task Order.

3.2 The CONTRACTOR shall submit semi-monthly invoices for services rendered. All invoices must reference the Task Order number. Invoices shall include a statement of progress and appropriate audit quality detail to satisfy the Federal Emergency Management Agency (FEMA) requirements.

3.3 Payment of CONTRACTOR by AUTHORITY is not contingent upon the AUTHORITY being reimbursed by the Federal Emergency Management Agency (FEMA). Payment to CONTRACTOR will be made for any work directed by the AUTHORITY which is determined by Federal and State agencies to be ineligible for reimbursement.

3.4 Payment of invoices shall be within thirty (30) days after receipt of a correct, fully documented invoice. All invoices shall be delivered to:

Solid Waste Authority of Palm Beach County
7501 North Jog Road
West Palm Beach, Florida 33412
Attn: Accounts Payable

3.5 CONTRACTOR will clearly mark its final/last billing with the words "Final Invoice". This will certify that all services have been fully performed under this Agreement and that all charges and costs have been invoiced to the AUTHORITY. Thereupon, this account will be closed and any additional charges or costs, not included in the Final Invoice, shall be waived by CONTRACTOR. The AUTHORITY shall not be liable for the payment of any such additional charges or costs not included in the Final Invoice.

3.6 The AUTHORITY will retain 5% of the payment under each Task Order until such time as the entire project is completed to the AUTHORITY's satisfaction and all subcontractors and any material suppliers verify that they have been paid.

ARTICLE 4 - INSURANCE

4.1 During the performance of the Services under this Agreement, CONTRACTOR shall maintain the following insurance policies written by an insurance company authorized to do business in Florida and acceptable to the AUTHORITY.

1. **General Liability** Insurance with bodily injury limits of not less than $1,000,000 for each occurrence, and with property damage limits of not less than $1,000,000 for each occurrence.

2. **Automobile Liability** Insurance with bodily injury limits of not less than $5,000,000 for each person and not less than $5,000,000 for each accident and with property damage limits of not less than $5,000,000 for each accident.

3. **Workers' Compensation** Insurance in accordance with statutory requirements and Employer's Liability Insurance with limits of not less than $500,000 for each accident, $500,000 for each disease, and $500,000 aggregate.

4. **Excess Liability** Insurance with limits of not less than $10,000,000 for each occurrence and annual aggregate.

4.2 Deductible amounts shall not exceed 5% of the total amount of required insurance in each category. Should any policy contain any unusual exclusions, said exclusions shall be so indicated on the certificate(s) of insurance.

4.3 CONTRACTOR shall furnish AUTHORITY **Certificates of Insurance**, which shall include a provision that policy cancellation, non-renewal or reduction of coverage will not be effective until at least **thirty (30) days** after written notice has been given to the AUTHORITY. CONTRACTOR shall include AUTHORITY as an

Additional Insured on the General Liability and Automobile Liability insurance policy required by this Agreement. All of CONTRACTOR'S subcontractors shall be required to include AUTHORITY and CONTRACTOR as **Additional Insureds** on all of their liability insurance policies.

4.4 CONTRACTOR shall ensure that CONTRACTOR's naming of the AUTHORITY as an additional insured on its General Liability and Automobile Liability insurance policies pursuant to this Agreement shall afford coverage for the negligent, reckless, intentionally wrongful or willful acts of CONTRACTOR and other persons employed or utilized by the CONTRACTOR in the performance of this Agreement.

4.5 In the event that subcontractors used by the CONTRACTOR do not have insurance, or do not meet the required insurance limits herein, CONTRACTOR shall indemnify and hold harmless the AUTHORITY for any claim(s) in excess of the subcontractor's insurance coverage.

4.6 The CONTRACTOR shall not commence work under this Agreement until all insurance required as stated herein has been obtained and such insurance has been approved by the AUTHORITY.

ARTICLE 5 - STANDARD OF CARE

5.1 The CONTRACTOR shall exercise the same degree of care, skill, and diligence in the performance of the Services performed pursuant to this Agreement as is ordinarily provided by comparable, qualified professionals under similar circumstances. The CONTRACTOR shall, at no additional cost to AUTHORITY, re-perform services which fail to satisfy the foregoing standard of care.

5.2 The CONTRACTOR warrants that all services shall be performed by skilled and competent personnel to the highest professional standards in the field.

ARTICLE 6 - INDEMNIFICATION

6.1 **GENERAL**

Having considered the risks and potential liabilities that may exist during the performance of the services and in consideration of the promises included herein, AUTHORITY and CONTRACTOR agree to allocate such liabilities in accordance with this Article 6.

6.2 **INDEMNIFICATION**

The CONTRACTOR shall indemnify and hold harmless the AUTHORITY, and its officers and employees, from all liabilities, damages, losses, and costs, including, but not limited to, reasonable attorney's fees, to the extent caused by the negligence, recklessness, or intentionally wrongful conduct of the CONTRACTOR and other persons employed or utilized by the CONTRACTOR in the performance of the Agreement.

6.3 **SURVIVAL**

Upon completion of all services, obligations and duties provided for in this Agreement, or in the event of termination of this Agreement for any reason, the terms and conditions of this Article shall survive.

ARTICLE 7 - INDEPENDENT CONTRACTOR

7.1 The CONTRACTOR is, and shall be, in the performance of all work services and activities performed under this Agreement, an Independent Contractor, and not an employee, agent, or servant of the AUTHORITY. All persons engaged in any of the work or services performed pursuant to this Agreement shall at all times, and in all places, be subject to the CONTRACTOR'S sole direction, supervision, and control. The CONTRACTOR shall exercise control over the means and manner in which it and its employees perform the work, and in all respects the CONTRACTOR'S relationship and the relationship of its employees to the AUTHORITY shall be that of an Independent Contractor and not as employees or agents of the AUTHORITY.

7.2 The CONTRACTOR does not have the power or authority to bind the AUTHORITY in any promise, agreement or representation other than specifically provided for in this Agreement.

ARTICLE 8 - AUTHORITY TO CONDUCT BUSINESS

The CONTRACTOR hereby represents and warrants that it has and will continue to maintain all licenses and approvals required to conduct its business and perform all requirements in this Agreement.

ARTICLE 9 - COMPLIANCE WITH LAWS

In performance of the Services, the CONTRACTOR will comply with applicable regulatory requirements including federal, state, special district, and local laws, rules, regulations, orders, codes, criteria, and standards.

ARTICLE 10 - SUB-CONTRACTING

10.1 The AUTHORITY reserves the right, in its sole and unfettered discretion, to accept the use of a subcontractor or to reject the selection of a particular subcontractor under this Agreement.

10.2 If a subcontractor fails to perform or make progress, as required by this Agreement, and it is necessary to replace the subcontractor to complete the work in a timely fashion, the CONTRACTOR shall promptly do so, subject to acceptance of the new subcontractor by the AUTHORITY.

ARTICLE 11 - FEDERAL AND STATE TAXES

The AUTHORITY is exempt from Federal Tax and State Sales and Use Taxes. Upon request, the AUTHORITY will provide an exemption certificate to CONTRACTOR. The CONTRACTOR shall not be exempted from paying sales tax to its suppliers for materials to fulfill contractual obligations with the AUTHORITY, nor shall the CONTRACTOR be authorized to use the AUTHORITY'S Tax Exemption Number in securing such materials.

ARTICLE 12 - AVAILABILITY OF FUNDS

The obligations of the AUTHORITY under this Agreement are subject to the availability of funds lawfully appropriated for its purpose by the Board of the Solid Waste Authority of Palm Beach County.

ARTICLE 13 - AUTHORITY'S RESPONSIBILITIES

AUTHORITY shall be responsible for providing access to all project sites, and providing information on hand required by CONTRACTOR, including existing reports, studies, financial information, and other required data that are available in the files of the AUTHORITY.

ARTICLE 14 - DEFAULT

14.1 The AUTHORITY may, by written notice of default to the CONTRACTOR, terminate the Agreement in whole or in part if the CONTRACTOR: a) fails to satisfactorily perform any provisions of this Agreement; or b) fails to make progress so as to endanger performance under the terms and conditions of this Agreement; or c) repeatedly fails to perform; or d) does not remedy any such failure within a period of ten (10) days (or such period as the Director of Purchasing Services may authorize in writing) after receipt of notice from the Director of Purchasing Services specifying such failure. In the event the AUTHORITY terminates this Agreement in whole or in part because of default of the CONTRACTOR, the AUTHORITY may, in its sole and unfettered discretion, procure goods and/or services similar to those required under this Agreement and the CONTRACTOR shall be liable for any excess costs incurred due to this action.

14.2 If it is determined that the CONTRACTOR was not in default or that the default was excusable (e.g., failure

due to causes beyond the control of, or without the fault or negligence of the CONTRACTOR), the rights and obligations of the parties shall be those provided in Article 15 – Termination for Convenience.

ARTICLE 15 – TERMINATION FOR CONVENIENCE

15.1 The Director of Purchasing Services may, whenever the interests of the AUTHORITY so require, terminate this Agreement, in whole or in part, for the convenience of the AUTHORITY. The Director of Purchasing Services shall give five (5) business days prior written Notice of Termination to the CONTRACTOR, specifying the portions of the Agreement to be terminated and when the termination is to become effective. If only portions of the Agreement are terminated, the CONTRACTOR has the right to withdraw, without adverse action by the AUTHORITY, from the entire Agreement.

15.2 Unless directed differently in the Notice of Termination, the CONTRACTOR shall incur no further obligations in connection with the terminated work and shall stop work to the extent specified on the date given in the Notice of Termination. Additionally, unless directed differently, the CONTRACTOR shall terminate outstanding orders and/or subcontracts related to the terminated work.

15.3 Unless the CONTRACTOR is in breach of this Agreement, the CONTRACTOR shall be paid for services rendered to the AUTHORITY'S satisfaction through the date of termination specified in the Notice of Termination.

ARTICLE 16 - UNCONTROLLABLE FORCES

16.1 Neither the AUTHORITY nor CONTRACTOR shall be considered to be in default of this Agreement if delays in or failure of performance shall be due to Uncontrollable Forces, the effect of which, by the exercise of reasonable diligence, the non-performing party could not avoid. The term "Uncontrollable Forces" shall mean any event which results in the prevention or delay of performance by a party of its obligations under this Agreement and which is beyond the reasonable control of the nonperforming party. It includes, but is not limited to fire, flood, earthquakes, storms, lightning, epidemic, pandemic, war, riot, civil disturbance, sabotage, and governmental actions.

16.2 Neither party shall, however, be excused from performance if nonperformance is due to forces which are preventable, removable, or remediable and which the nonperforming party could have, with the exercise of reasonable diligence, prevented, removed or remedied with reasonable dispatch. The non-performing party shall, within a reasonable time of being prevented or delayed from performance by an uncontrollable force, give written notice to the other party describing the circumstances and uncontrollable forces preventing continued performance of the obligations of this Agreement.

ARTICLE 17 – JURISDICTION, VENUE, WAIVER OF JURY TRIAL AND REMEDIES

This Agreement shall be governed by the laws of the State of Florida. Any and all legal action necessary to enforce the Agreement shall be in a State court of competent jurisdiction located exclusively in Palm Beach County. With the exception of the choice of law and venue provisions contained herein, no remedy conferred upon any party is intended to be exclusive of any other remedy, and each and every such remedy shall be cumulative and shall be in addition to every other remedy given hereunder or now or hereafter existing at law or in equity. No single or partial failure by any party to exercise any right, power, or remedy hereunder, shall preclude that party from exercising that right, power or remedy in the future. **THE AUTHORITY AND CONSULTANT FREELY AND VOLUNTARILY AGREE TO WAIVE ITS RESPECTIVE RIGHT TO A JURY TRIAL ON ANY ISSUE(S) SO TRIABLE.**

ARTICLE 18 – COMMERCIAL NON-DISCRIMINATION POLICY

As a condition of entering into this Agreement, the CONTRACTOR represents and warrants that it will comply with the AUTHORITY's Commercial Non-Discrimination Policy, as described in Section 6.3 of the AUTHORITY's Purchasing

Manual, including subsequent amendments thereto, if any. As part of such compliance, the CONTRACTOR shall not discriminate on the basis of race, color, religion, ancestry or national origin, gender, age, marital status, familial status, sexual orientation, gender identity or expression, disability, or genetic information in the solicitation, selection, hiring or commercial treatment of subcontractors, vendors, suppliers, or commercial customers, nor shall the CONTRACTOR retaliate against any person for reporting instances of such discrimination. The CONTRACTOR shall provide equal opportunity for subcontractors, vendors and suppliers to participate in all of its public sector and private sector subcontracting and supply opportunities, provided that nothing contained in this clause shall prohibit or limit otherwise lawful efforts to remedy the effects of marketplace discrimination that have occurred or are occurring in the AUTHORITY's relevant marketplace in Palm Beach County. The CONTRACTOR understands and agrees that a material violation of this clause shall be considered a material breach of this Agreement and may result in termination of this Agreement, disqualification or debarment of the CONTRACTOR from participating in AUTHORITY contracts, or other sanctions. This clause is not enforceable by or for the benefit of, and creates no obligation to, any third party. The CONTRACTOR agrees and understands that the provisions of Section 6.3 of the AUTHORITY's Purchasing Manual are incorporated herein by reference and that the CONTRACTOR is familiar with the contents of same.

ARTICLE 19 - WAIVER

A waiver by either AUTHORITY or CONTRACTOR of any breach of this Agreement shall not be binding upon the waiving party unless such waiver is in writing. In the event of a written waiver, such a waiver shall not affect the waiving party's rights with respect to any other or further or subsequent breach. The making or acceptance of a payment by either party with knowledge of the existence of a default or breach shall not operate or be construed to operate as a waiver of any further or subsequent default or breach.

ARTICLE 20 - SEVERABILITY

20.1 The invalidity, illegality, or unenforceability of any provision of this Agreement, or the occurrence of any event rendering any portion or provision of this Agreement void, shall in no way affect the validity or enforceability of any other portion or provision of the Agreement. Any void provision shall be deemed severed from the Agreement and the balance of the Agreement shall be construed and enforced as if the Agreement did not contain the particular portion or provision held to be void. The parties further agree to reform the Agreement to replace any stricken provision with a valid provision that comes as close as possible to the intent of the stricken provision.

20.2 The provisions of this section shall not prevent the entire Agreement from being void if a provision which is of the essence of the Agreement is determined to be void.

ARTICLE 21 - ENTIRETY OF AGREEMENT AND MODIFICATION

The AUTHORITY and the CONTRACTOR agree that this Agreement, including Exhibits and Attachments, and any matters incorporated by specific reference set forth the entire agreement between the parties, and that there are no promises or understandings other than those stated herein. This Agreement supersedes all prior agreements, contracts, proposals, representations, negotiations, letters or other communications between the AUTHORITY and CONTRACTOR pertaining to the services, whether written or oral. None of the provisions or terms and conditions contained in this Agreement may be added to, amended, modified, superseded or otherwise altered except by written instrument executed by the parties thereto.

ARTICLE 22 - SUCCESSORS AND ASSIGNS

AUTHORITY and CONTRACTOR each binds itself and its partners, successors, executors, administrators, assigns and legal representatives to the other party and its partners, successors, executors, administrators, assigns and legal representative. CONTRACTOR shall not assign this Agreement without the prior express written approval of the AUTHORITY in its sole discretion via executed amendment.

ARTICLE 23 - CONTINGENT FEES

The CONTRACTOR warrants that it has not employed or retained any company or person, other than a bona fide employee working solely for the CONTRACTOR to solicit or secure this Agreement and that it has not paid or agreed to pay any person, company, corporation, individual or firm, other than a bona fide employee working solely for the CONTRACTOR, any fee, commission, percentage, gift or any other consideration contingent upon or resulting from the award or making of this Agreement.

ARTICLE 24 - TRUTH-IN-NEGOTIATION CERTIFICATE

24.1 Execution of this Agreement by the CONTRACTOR shall act as the execution of a truth-in-negotiation certificate certifying that the wage rates and costs used to determine the compensation provided for in this Agreement are accurate, complete, and current as of the Effective Date of the Agreement.

24.2 The said rates and costs shall be adjusted to exclude any significant sums should the AUTHORITY determine that the rates and costs were increased due to inaccurate, incomplete or noncurrent wage rates or due to inaccurate representations of fees paid to outside consultants. The AUTHORITY shall exercise its rights under this 'Certificate" within one (1) year following payment.

ARTICLE 25 - OWNERSHIP OF DOCUMENTS

CONTRACTOR shall be required to cooperate with other consultants relative to providing information requested in a timely manner and in the specified form. Any and all documents, records, disks, original drawings, or other information shall become the property of the AUTHORITY for its use and/or distribution as may be deemed appropriate by the AUTHORITY in its sole and unfettered discretion.

ARTICLE 26 - PUBLIC RECORDS, ACCESS AND AUDITS

26.1 It is the intent of this Article to maintain compliance with the Florida Public Records Law, Ch. 119, Florida Statutes, as amended.

26.2 **DESIGNATED RECORDS CUSTODIAN CONTACT INFORMATION:**

IF THE CONTRACTOR HAS QUESTIONS REGARDING THE APPLICATION OF CHAPTER 119, FLORIDA STATUTES, THE CONTRACTOR'S DUTY TO PROVIDE PUBLIC RECORDS RELATING TO THIS AGREEMENT, CONTACT THE CUSTODIAN OF PUBLIC RECORDS AT:
RECORDS MANAGER
SOLID WASTE AUTHORITY OF PALM BEACH COUNTY
7501 NORTH JOG ROAD
WEST PALM BEACH, FL 33412
561-640-4000 EXT. 4606
RECORDSCUSTODIAN@SWA.ORG

26.3 The CONTRACTOR shall maintain records related to all charges, expenses, and costs incurred in estimating and performing the work, in accordance with the timeframes and classifications for records retention as per the General Records Schedule GS1-SL for State and Local Government Agencies (see: https://dos.myflorida.com/library-archives/records-management/general-records-schedules/) after completion or termination of this Contract. Upon AUTHORITY'S request, CONTRACTOR shall provide AUTHORITY with access to such records during normal business hours at a location within Palm Beach County for purposes of inspection or audit.

26.4 Notwithstanding anything herein to the contrary, the CONTRACTOR expressly acknowledges that: i) it is providing a specific service to the AUTHORITY in the performance of this Contract; ii) acting on behalf of the AUTHORITY in the performance of this Contract; iii) that it has read and is familiar with the Florida Public Records Law, Ch. 119, Florida Statutes, as amended, and both understand its responsibility and obligation to comply with this law; and iv) to the extent any question(s) arise regarding its duties to produce public records, it shall contact the Records Manager with same.

26.5 Any public records requests directed to, or related in any way to this contract shall be directed solely to the Records Manager. If the requested records are not in the possession of the Records Manager, they shall immediately notify the CONTRACTOR and the CONTRACTOR must provide the records or allow access to the records within a reasonable time. A CONTRACTOR who fails to provide the records to the public agency within a reasonable time may be subject to penalties under Florida Statutes (F.S) §119.10, and §119.10(2) provides that a person who willfully and knowingly violates the Public Records Act commits a misdemeanor of the first degree, which is punishable by up to a year in jail and a fine not to exceed $1,000.

26.6 Therefore, the CONTRACTOR is required to:

1) Keep and maintain public records that ordinarily and necessarily would be required by the AUTHORITY in order to perform the service;

2) Upon AUTHORITY's request from the AUTHORITY's Records Manager; provide the AUTHORITY with a copy of the requested records to allow the records to be inspected or copied within a reasonable time on the same terms and conditions that the AUTHORITY would provide the records at a cost that does not exceed the cost provided by Florida law;

3) Ensure that public records that are exempt or confidential and exempt from public records disclosure requirements are not disclosed except as authorized by law for the duration of the Agreement term and following the completion of the Agreement if the CONTRACTOR does not transfer the records to the AUTHORITY; and

4) Upon completion of the Agreement, transfer at no cost to the AUTHORITY, all public records in possession of the CONTRACTOR or keep and maintain public records to the AUTHORITY upon completion or termination of the Agreement; the CONTRACTOR shall destroy any duplicate public records that are exempt or confidential and exempt from public records disclosure requirements. If the CONTRACTOR keeps and maintains public records upon completion of the Agreement, the CONTRACTOR shall meet all applicable requirements for retaining public records. All records stored electronically must be provided to the AUTHORITY, upon request from the AUTHORITY's Records Manager, either during performance of the Agreement or after termination or completion of the Agreement in a format that is compatible with the information technology systems of the AUTHORITY.

26.7 Failure of the CONTRACTOR to comply with these requirements shall be a material breach of this Contract.

26.8 CONTRACTOR shall maintain financial and program records to justify all charges and costs incurred in performing the work for at least three (3) years following final payment by the AUTHORITY as Federal Emergency Management Agency (FEMA) sub-grantee as required by 2 CFR 200.333. The AUTHORITY shall have access to such books, records, and documents as required in this section for the purpose of inspection or audit.

26.9 In the event records retention requirements in Florida Statutes Chapter 119 and 257 exceed those of FEMA, the records shall be retained to comply with the State of Florida requirements.

ARTICLE 27 - INSPECTOR GENERAL

Palm Beach County has established the Office of the Inspector General (OIG), Ordinance No. 2009-049 which is authorized and empowered to review past, present and proposed county contracts, transactions, accounts and records. The AUTHORITY has entered into an Interlocal Agreement (ILA) for Inspector General Services. This agreement provides for the Inspector General to provide services to the AUTHORITY in accordance with the authority, functions and powers set out in the Palm Beach County Office of Inspector General Ordinance. All parties doing business with the AUTHORITY and receiving AUTHORITY funds shall fully cooperate with the Inspector General including providing access to records relating to this agreement. The Inspector General has the power to subpoena witnesses, administer oaths, require the production of records, and audit, investigate, monitor, and inspect the activities of the CONTRACTOR, its officers, agents, employees, and lobbyists in order to ensure compliance with contract specifications and detect corruption and fraud. Failure to cooperate with the Inspector General or interference or impeding any investigation shall be in violation of Ordinance 2009-049, and punished pursuant to Section 125.69, Florida Statutes, in the same manner as a second-degree misdemeanor.

ARTICLE 28 - NOTICE

Any notice, demand, communication, or request required or permitted hereunder shall be in writing and delivered in person or sent by certified mail, postage prepaid as follows:

AS TO AUTHORITY

Solid Waste Authority of Palm Beach County
7501 North Jog Road
West Palm Beach, Florida 33412

Attention: Executive Director
Office No.: 561-640-4000 Fax No.: 561-640-3400

AS TO CONTRACTOR

AshBritt, Inc.
565 E. Hillsboro Boulevard
Deerfield Beach, Florida 33441

Attention: Rob Ray, Senior Vice President
Office No.: 954-725-6992 Fax No.: 954-725-6991 E-Mail: rray@ashbritt.com

Notices shall be effective when received at the addresses as specified above. Changes in the respective addresses to which such notice is to be directed may be made from time to time by either party by written notice to the other party. Facsimile transmission is acceptable notice effective when received, however, facsimile transmissions received (i.e.;

printed) after 5:00 p.m. or on weekends or holidays, will be deemed received on the next business day. The original of the notice must additionally be mailed as required herein.

Nothing contained in this Article shall be construed to restrict the transmission of routine communications between representatives of CONTRACTOR and AUTHORITY.

ARTICLE 29 - CONTRACT ADMINISTRATION

Services of CONTRACTOR shall be under the general direction of the **Chief Operations Officer**, or designee, who shall act as the AUTHORITY'S representative during the term of the Agreement.

ARTICLE 30 - KEY PERSONNEL

CONTRACTOR shall notify AUTHORITY in the event of key personnel changes which might affect this Agreement. Notification shall be made within ten (10) days of said changes. AUTHORITY has the right to reject any proposed changes in key personnel. The following personnel shall be considered key personnel:

Rob Ray – Project Manager
Cell No.: 954-868-9502 E-Mail: rray@ashbritt.com

Brittany Perkins – Chief Executive Officer
Cell No.: 954-725-6992 E-Mail: response@ashbritt.com

Randall Perkins – Senior Operations Advisor
Cell No.: 954-725-6992 E-Mail: response@ashbritt.com

Brian Thomason – Operations Manager
Cell No.: 954-240-1110 E-Mail: bthomason@ashbritt.com

Matt Gierden – Quality Control Manager
Cell No.: 239-229-5829 E-Mail: matt@ashbritt.com

Dow Knight – Quality Control Manager
Cell No.: 954-818-4416 E-Mail: dow@ashbritt.com

Jason Fawcett – Operations Supervisor
Cell No.: 757-285-5456 E-Mail: jason@ashbritt.com

ARTICLE 31 – EQUAL BUSINESS OPPORTUNITY PROGRAM:

The Governing Board of the AUTHORITY has implemented the Economic Inclusion Policy administered by the Equal Business Opportunity (EBO) Program Office to ensure that all segments of its business population, including, but not limited to local, small, minority, and women-owned businesses, have an equitable opportunity to participate in the AUTHORITY'S procurement process, in accordance with Section 6.1 through 6.4 of the Purchasing Manual. Program tools and solicitation incentives are hereby referred to as the Affirmative Procurement Initiatives (API).

31.1 **Affirmative Procurement Initiative (API):**

The AUTHORITY has NOT applied an Affirmative Procurement Initiative to this Agreement.

ARTICLE 32 - SCRUTINIZED COMPANIES

32.1 As provided in F.S. 287.135, by entering into this Agreement or performing any work in furtherance hereof, the CONTRACTOR certifies that it, its affiliates, suppliers, subcontractors and consultants who will perform hereunder, have not been placed on the Scrutinized Companies With Activities in Sudan List or Scrutinized Companies With Activities in The Iran Petroleum Energy Sector List created pursuant to F.S. 215.473, or is engaged in business operations in Cuba or Syria.

If the AUTHORITY determines, using credible information available to the public, that a false certification has been submitted by CONTRACTOR, this Agreement may be terminated and a civil penalty equal to the greater of $2 million or twice the amount of this Agreement shall be imposed, pursuant to F.S. 287.135. Said certification must also be submitted at the time of renewal of this Agreement.

32.2 As provided in F.S. 287.135, by entering into this Agreement or performing any work in furtherance hereof, this Agreement certifies that it, its affiliates, suppliers, subcontractors, and consultants who will perform hereunder, have not been placed on the Scrutinized Companies that Boycott Israel List, or is engaged in a boycott of Israel, pursuant to F.S. 215.4725.
If the AUTHORITY determines, using credible information available to the public, that a false certification has been submitted by CONTRACTOR, this may be terminated and a civil penalty equal to the greater of $2 million or twice the amount of this shall be imposed, pursuant to F.S. 287.135. Said certification must also be submitted at the time of renewal of this Agreement.

ARTICLE 33 - AGREEMENTS WITH OTHER GOVERNMENTAL ENTITIES

33.1 The CONTRACTOR agrees that this Agreement constitutes an offer to all State and local government agencies of the State of Florida under the same terms and conditions, for the same prices and for the same effective period as specified in this Agreement should the CONTRACTOR deem it in the best interest of their business to do so.

33.2 The Agreement in no way restricts or interferes with any State or local government agencies of the State of Florida from re-solicitation.

ARTICLE 34 – THIRD PARTY BENEFICIARY DISCLAIMER

It is not the intention of these documents to create third party beneficiary status in any person or entity that is not a direct party to this Agreement, and no language in this Agreement should be construed or interpreted as creating a third party beneficiary.

ARTICLE 35 – E-VERIFY – EMPLOYMENT ELIGIBILITY

35.1 The CONTRACTOR certifies, warrants and represents that it is in compliance with Section 448.095, Florida Statutes, as may be amended and that CONTRACTOR shall: (1) register with and use the E-Verify System (E-Verify.gov) to electronically verify the employment eligibility of all newly hired workers; and (2) has verified that all of the CONTRACTOR'S subcontractors performing the duties and obligations of this Agreement are registered with and use the E-Verify System to electronically verify the employment eligibility of all newly hired workers. CONTRACTOR shall obtain from each of its subcontractors an affidavit stating that the subcontractor does not employ, contract with, or subcontract with an Unauthorized Alien, as that term is defined in Section 448.095(1)(k), Florida Statutes, as may be amended. CONTRACTOR shall maintain a copy of any such affidavit from a subcontractor for, at a minimum, the duration of the subcontract and any extension thereof. This provision shall not supersede any provision of this Agreement which requires a longer retention period.

35.2 AUTHORITY shall terminate this Agreement if it has a good faith belief that CONTRACTOR has knowingly violated Section 448.09(1), Florida Statutes, as may be amended. If AUTHORITY has a good faith belief that one of CONTRACTOR'S subcontractor(s) has knowingly violated Section 448.09(1), Florida Statutes, as may be amended, AUTHORITY shall notify CONTRACTOR to terminate its contract with the subcontractor and

CONTRACTOR shall immediately terminate its contract with the subcontractor. If AUTHORITY terminates this Agreement pursuant to the above, CONTRACTOR shall be barred from being awarded a future contract by AUTHORITY for a period of one (1) year from the date on which the Agreement was terminated. In the event of such contract termination, CONTRACTOR shall also be liable for any additional costs incurred by AUTHORITY as a result of the termination.

ARTICLE 36 – CONFIDENTIALITY

No reports, information, computer programs, documentation, and/or data given to, or prepared or assembled by the CONTRACTOR under this Agreement shall be made available to any individual or organization by the CONTRACTOR without prior written approval of the AUTHORITY.

ARTICLE 37 – PAYMENT ADJUSTMENT SCHEDULE

37.1 The AUTHORITY acknowledges the fluctuating nature of prices.

37.2 Annual Non-Fuel: The Non-Fuel Adjustment shall be applied to those rates subject to adjustment and as provided within this Agreement. For the purpose of this Agreement, the Non-Fuel component is assumed to represent 90% of the CONTRACTOR's costs. Therefore, 90% of the approved rates shall be so adjusted:

The rates shall be adjusted as follows:

The rates shall be adjusted annually, commencing on the first anniversary date, by the change in the Water and Sewer and Trash Collection Services Index, Series ID CUSR0000SEHG, as published by the United States Department of Labor, Bureau of Labor Statistics (jwww.bls.gov). The change in the index shall be calculated by dividing the average of the index over the twelve-month period ending the December preceding the effective date of the adjustment (January – December 2022) by the average of the index over the twelve-month period from January 2021 through December 2021. The first Annual Non-Fuel adjustment shall be effective May 7, 2023 to May 6, 2024.

For example:
For the Contract year beginning May 7, 2023, the average of the index over the twelve-month period from January 2022 through December 2022 shall be divided by the average of the index over the twelve-month period from January 2021 through December 2021, multiplying the result by ninety (90) percent of the contract or AUTHORITY established price, and subtracting ninety (90) percent of the contract or AUTHORITY established price.

The surcharge/credit shall be rounded to the nearest cent.

Formula:

Most Recent Year Average / Prior Year Average x .90 x Rate – (.90 x Rate) = Annual Adjustment

Calendar:

Annual Payment Adjustment Calendar

April 2023	April 2024

Extension Clause Annual Payment Adjustment Schedule

April 2025	April 2026	April 2027

37.3 **Activation Fuel Adjustment (Fuel Surcharge/Credit)**

The rates subject to adjustment shall be subject to a fuel price surcharge/credit for fluctuations in the price of fuel. For the purpose of this Agreement, fuel is assumed to represent 10% of the Contractor's costs therefore 10% of the approved rates shall be so adjusted. Fuel adjustment shall be calculated and effective upon activation.

The rates shall be adjusted as follows:

For the rates subject to adjustment, a fuel surcharge/credit shall be charged/credited basis based on the percentage change in the average price of fuel as published by the Oil Price Information Service (OPIS) and measured by the OPIS Standard Rack, OPIS No. 2 Distillate Gross Prices, Unbranded Average for Miami, Florida between the month of **January 2022 (Base)** and the most recent month available upon activation.

Fuel Adjustment does not use a floor or ceiling and provides adjustments in either direction without limit.

The surcharge/credit shall be rounded to the nearest cent.

Formula:

Most recent OPIS (at activation) / Base x .10 x Rate – (.10 x Rate) = Fuel Adjustment (for duration of activation)

For example:

Should activation occur October 2023, the fuel surcharge/credit shall be calculated by dividing the reported unbranded average price for September 2023 by the Base (unbranded average price for January 2022), multiplying the result by ten (10) percent of the contract or Authority established price, and subtracting ten (10) percent of the contract or Authority established price.

37.4 In the event that either of these indices is no longer available, the parties shall mutually agree to a replacement index. The value of the adjustment will be determined by the AUTHORITY.

ARTICLE 38 – ORDER OF AGREEMENT ACTIVATION/LOCATION ASSIGNMENT

The CONTRACTOR has entered into a contingent Agreement with the AUTHORITY for Hurricane/Disaster Debris Removal, Reduction, and Disposal. The Agreement awarded will be activated on an as-needed basis as solely determined by the AUTHORITY. The AUTHORITY may activate, assign/reassign any or all CONTRACTORS at any time as may be deemed appropriate depending upon the circumstance(s), the event, or any other condition which may warrant such action as it determines in its sole and unfettered discretion.

ARTICLE 39 – TASK ORDER/PERFORMANCE

Task Orders shall be executed bilaterally, and the scope of services and format of Task Orders shall be mutually agreed to by the CONTRACTOR and AUTHORITY. Performance will be measured by the metrics established in each Task Order. After 1/3 and again after 2/3 of the stipulated number of days of work in the Task Order have elapsed, the CONTRACTOR(S) shall provide a written progress report to the AUTHORITY for review and acceptance. The AUTHORITY shall have the right to correct for CONTRACTOR default or underperformance by any means it deems in its best interest. CONTRACTOR will be required to provide a daily report of quantity of work performed under each Task Order. The daily report shall be submitted by 11:00 a.m. or earlier the following morning.

ARTICLE 40 – BONDS

CONTRACTOR shall maintain a Proposal Bond in the sum of $500,000. The CONTRACTOR's Proposal Bond will be returned to the CONTRACTOR in exchange for and acceptance of an appropriate size bond as determined by the AUTHORITY after assessment of damage and definition of the CONTRACTOR's scope of service. In case of hurricane caused damage, a Category 1 storm would require a $2,000,000 Bond, a Category II would require a $4,000,000 Bond, a Category III would require a $6,000,000 Bond, a Category IV would require an $8,000,000 Bond, and a Category V would require a $10,000,000 Bond. The Bond required would be a Performance and Payment Bond, Attachment G. The cost of the Bond is included in the unit rates in the Fee Schedule, Exhibit B. The CONTRACTOR shall maintain the Proposal Bond in effect until the Performance and Payment Bond is submitted to and accepted by the AUTHORITY. If the CONTRACTOR fails to supply a Performance and Payment Bond, the AUTHORITY shall be entitled to retain the Proposal Bond to rectify the CONTRACTOR's unacceptable performance. Pending successful annual CONTRACTOR recertification, the Proposal Bond shall be in effect for the entire term of the Agreement, except for period(s) of time when a Performance and Payment Bond is in effect.

ARTICLE 41 – FLORIDA HIGHWAY ADMINISTRATION (FHWA) FORM 1273

41.1 This Agreement incorporates all of the provisions set forth in the document commonly known as FHWA Form 1273, Attachment E, which is attached hereto and incorporated by reference as part of this Agreement. The term "contractor" as used in Attachment E shall apply to and mean the CONTRACTOR who may be referred to in Attachment E as the "prime contractor", "bidder", "proposer", "prospective primary participant", "prospective participant", "participant" or the like. The CONTRACTOR will perform the duties and obligations of the other contracting party regardless of the description or label used in Form 1273, Attachment E.

41.2 The CONTRACTOR shall comply with the Davis-Bacon wages rates to the extent applicable to the work performed under this Agreement. The provisions of the Davis-Bacon Act do not apply to debris removal work unless such work is done in conjunction with a construction project or "linked" to a particular Federal Highway. Wage rate tables may be found at http://www.dot.state.fl.us/construction/wage.shtm. Said wage rate tables are incorporated into and made part of this Agreement by reference.

ARTICLE 42 – BUY AMERICA REQUIREMENTS

The CONTRACTOR agrees to comply with the requirements of the Federal Buy America law (See 23 U.S.C. 313, ISTEA Sections 1041(a) and 1048(a), as they may be amended from time to time) as they relate to Federal-aid contracts and the use of steel and iron produced in the United States. A description of the requirements of Buy America is set forth in **ATTACHMENT "F"**, which is attached hereto and incorporated by reference as part of this Agreement. CONTRACTOR shall provide a certification statement regarding the origin of all materials or products covered under the Buy America provisions and used in its performance of the Agreement in accordance with the requirements of law and the AUTHORITY, FDOT, and FEMA, to the extent applicable.

ARTICLE 43 – DISADVANTAGED BUSINESS ENTERPRISES

43.1 This provision shall supplement Article 31 "Equal Business Opportunity Program" of the Agreement. The Agreement is subject to the requirements of 49 CFR Part 26. The CONTRACTOR shall not discriminate on the basis of race, color, national origin, or sex in the performance of the Agreement. The CONTRACTOR shall carry out the applicable requirements of 49 CFR Part 26 in the award and administration of this U.S. DOT-assisted contract. Failure by the CONTRACTOR to carry out these requirements is a material breach of Agreement, which may result in the termination of this Agreement or such other remedy as the AUTHORITY deems appropriate, including but not limited to the withholding of payments. Each subcontract the CONTRACTOR signs with a subcontractor must include the assurance in this paragraph. (See 49 CFR 26.13). Upon request, the CONTRACTOR will provide the AUTHORITY with a copy of each subcontract it enters into.

43.2 The CONTRACTOR is required to pay its subcontractors performing work related to this Agreement for satisfactory performance of that work no later than thirty (30) days after the CONTRACTOR's receipt of payment for that work from the AUTHORITY. The CONTRACTOR may not hold any retainage from its subcontractors unless pursuant to an agreement approved by the AUTHORITY. The CONTRACTOR shall return all retainage payments withheld within thirty (30) days after the subcontractor's work has been satisfactorily completed.

43.3 The CONTRACTOR shall, on a monthly basis, submit payment certifications, including a certification regarding their truth and accuracy, for all payments it is seeking and certifications from all subcontractors indicating who has been paid and how. The certifications shall comply with all Federal and State requirements regarding the reporting of DBE participation. The CONTRACTOR shall, if required by the AUTHORITY or FDOT, report its DBE participation monthly on the Equal Opportunity Reporting System located on the Florida Department of Transportation's (FDOT) website found at www.bipincwebapps.com/bizwebflorida/. Audits may be conducted to review payments to DBE subcontractors. The CONTRACTOR will fully cooperate with the AUTHORITY, FDOT, or FEMA regarding the monitoring of subcontractors and payments made thereto.

ARTICLE 44 – CERTIFICATION REGARDING SUSPENSION AND DEBARMENT

44.1 This Agreement is a covered transaction for purposes of 49 CFR Part 29. Accordingly, the CONTRACTOR shall verify that neither the CONTRACTOR, nor its principals, as defined at 49 CFR 29.995, or affiliates, as defined at 49 CFR 29.905, are excluded or disqualified from participation in this Agreement as defined at 49 CFR 29.940 and 29.945.

44.2 The CONTRACTOR agrees to comply with the requirements of 49 CFR 29, Subpart C throughout the term of this Agreement. The CONTRACTOR must include the requirement to comply with 49 CFR 29, Subpart C in any lower tier covered transaction it enters into. CONTRACTOR's certification is a material representation of fact relied upon by the AUTHORITY. If it is later determined that the CONTRACTOR knowingly rendered an erroneous certification, in addition to remedies available to the AUTHORITY, the State or Federal government may pursue any available remedies, including but not limited to suspension and/or debarment. The CONTRACTOR further agrees that it will include a provision requiring such compliance in all of its subcontracts or lower tier covered transactions.

ARTICLE 45 – ACCESS TO RECORDS AND THEIR RETENTION

45.1 This provision shall supplement Article 26 of this Agreement. The CONTRACTOR shall maintain adequate records to justify all charges, expenses, and costs incurred in estimating and performing the Agreement for at least five (5) years after completion or termination of this Agreement or FDOT's closure of an "emergency event" with the Florida Division of Emergency Management, whichever comes last, except in the event of litigation or settlement of claims arising from the performance of the Agreement, the CONTRACTOR agrees to maintain said records until all litigation, claims, appeals or exceptions related thereto have been resolved. The records shall be maintained at a location in Palm Beach County, Florida or such other location in Florida approved by the AUTHORITY.

45.2 The CONTRACTOR shall make all of its books, records, and other documents related, in any manner to its or its subcontractors' performance of the Agreement, available to the AUTHORITY and any other funding entity (e.g. FDOT, FEMA, the Comptroller General of the U.S. or any of their authorized representatives) for the purpose of examination, audit, reproduction, excerpts and transcripts, during normal business hours, at the CONTRACTOR's place of business or if CONTRACTOR's place of business is not located in Palm Beach County, then at the location for maintenance of records referenced above. The CONTRACTOR shall also require its subcontractors to make their books, records and documents available for examination, audit, reproduction, excerpts, and transcripts, for the same duration and in the same manner, and at or near the same locations required herein of CONTRACTOR.

ARTICLE 46 – AUDIT REQUIREMENTS

This provision shall supplement Article 26 of this Agreement. The CONTRACTOR agrees that audits may be undertaken of its records related to its performance of the Agreement as may be authorized or required under OMB Circular A-133, as revised. The CONTRACTOR agrees that it will comply, execute any necessary documents and fully cooperate with the AUTHORITY and any State and/or Federal funding agency(ies), including but not limited to FDOT, Florida's Auditor General, FEMA, or any of their authorized representatives, in any audit or monitoring procedures or processes any such entity(ies) may undertake related to CONTRACTOR's performance of the Agreement in order to properly and satisfactorily complete the audit, if any.

ARTICLE 47 – NATIONAL ENVIRONMENTAL POLICY ACT (NEPA)

The CONTRACTOR shall cooperate with the AUTHORITY, FDOT, and FEMA so as to assure that all activities related to the performance of this Agreement comply with the requirements of the National NEPA of 1969, as amended, and the regulations and guidance related thereto.

ARTICLE 48 – AMERICANS WITH DISABILITIES ACT

The CONTRACTOR does hereby represent and certify that it will comply with all the requirements of the Americans with Disabilities Act of 1990 (42 USC 12102, et seq.), as it may be amended, and all applicable impending regulations of the U.S. DOT, FEMA, and other Federal-aid agencies.

ARTICLE 49 – COMPLIANCE WITH TITLE VI, TITLE VII, AND OTHER FEDERAL LAWS AND REGULATIONS

The CONTRACTOR does hereby represent and certify that it will comply with all the requirements imposed by Title VI of the Civil Rights Act of 1964 and Title VII of the Civil Rights Act of 1968, as they have been and may be modified from time to time (42 USC 2000d et. Seq. and 3601 et seq.) and the Age Discrimination and Employment Act of 1967 and Section 303 of the Age Discrimination Act of 1975, as amended (42 USC 6102), and all applicable Federal laws and regulations, policies, procedures, and directives of the U.S.DOT, FEMA and/or other Federal-aid agencies, as they may be promulgated and amended from time to time.

ARTICLE 50 – CONVICT LABOR PROHIBITION

The CONTRACTOR does hereby represent and certify that it will comply with the convict labor prohibition in 23 U.S.C. 114, and all implementing regulations thereto.

ARTICLE 51 – CERTIFICATION REGARDING LOBBYING ACTIVITIES

A Bidder or Proposer for an award of certain Federal-Aid contracts in the amount of $100,000 or more, must file the certification required by 49 CFR Part 2. The CONTRACTOR confirms that by signing and submitting a Bid or Proposal for the work covered by this Agreement, it made the certification described in Section X1 of the Attachment F herein.

ARTICLE 52 – DEPARTMENT OF HOMELAND SECURITY (DHS) SEAL, LOGO, AND FLAGS

The CONTRACTOR shall not use the DHS seal(s), logos, crests, or reproductions of flags or likenesses of DHS agency officials without specific FEMA pre-approval.

ARTICLE 53 – NO OBLIGATION BY FEDERAL GOVERNMENT

The Federal Government is not a party to this Agreement and is not subject to any obligations or liabilities to the AUTHORITY, CONTRACTOR, or any other party pertaining to any matter resulting from this Agreement.

ARTICLE 54 – PROGRAM FRAUD AND FALSE OR FRAUDULENT STATEMENTS OR RELATED ACTS

The CONTRACTOR acknowledges that 31 U.S.C Chapter 38 (Administrative Remedies for False Claims and Statements) applies to the CONTRACTOR's actions pertaining to this Agreement.

REMAINDER OF PAGE LEFT BLANK INTENTIONALLY

In Witness Whereof, AUTHORITY, and CONTRACTOR have made and executed this Agreement all as of the day and year first above written.

SOLID WASTE AUTHORITY OF PALM BEACH COUNTY:

WITNESS:

1. _____

2. _____

By: _____
Daniel Pellowitz
Executive Director

(SEAL)

APPROVED AS TO LEGAL SUFFICIENCY:

By: Howard J. Falcon III
Howard J. Falcon, III
General Counsel

Digitally signed by Howard J. Falcon III
DN: DC=org, DC=pbcgov, OU=Enterprise, OU=ASHBRITT, OU=Users, CN=Howard J. Falcon III, E=hfalcon@pbcgov.org
Reason: I am the author of this document
Location: your signing location here
Date: 2022.04.28 12:13:59-04'00'
Foxit PDF Editor Version: 11.2.1

APPROVED AS TO TERMS AND CONDITIONS:

_____
Signature

Patrick D. Carroll
Print Name

CCO
Title

ATTEST:

_____
Corporate ~~Secretary~~ Treasurer

ASHBRITT, INC.:

_____
Authorized Signature

Dow Knight
Print Name

Corporate Secretary and Senior Vice President
Title

04/28/2022
Date

WITNESS:

1. _____
Jackie Ryan

2. _____
Matt Gierden

(Affix Corporate Seal)

Approved by Authority Board on April 13, 2022, Item No.: 9. C.1

SCOPE OF WORK

1. PROJECT DESCRIPTION AND REQUIREMENTS:

A. The AUTHORITY seeks CONTRACTOR to remove and lawfully dispose of disaster-generated debris (other than hazardous materials and household putrescible garbage) from public property and public rights-of-way, and to setup and operate Temporary Debris Management Site(s) (TDMS) in Palm Beach County, Florida, immediately after a hurricane or other disaster.

B. The objective of this RFP and subsequent contracting activity is to secure the services of the CONTRACTOR who is capable of efficiently removing large volumes of disaster-generated debris from a large area in a safe, timely and cost-effective manner and lawfully disposing of all debris. CONTRACTOR must be capable of assembling, directing, and managing a work force that can complete the debris management operations in 120 days or less. The duration of effort/completion dates of all tasks will be determined jointly by the AUTHORITY and CONTRACTOR. This determination will be set in writing in appropriate Task Order(s).

C. The CONTRACTOR shall perform all work in strict accordance with Federal Emergency Management Agency (FEMA) guidelines in order to maximize recovery of reimbursable expenses. This task shall include the provision of audit quality documentation as required by and acceptable to FEMA for all work accomplished.

D. The CONTRACTOR may be required, at the AUTHORITY'S discretion, to be under the direction of an agent of the AUTHORITY.

E. While intended to cover debris management needs in any major disaster scenario, the primary focus is on the threat of hurricane damage to Palm Beach County, Florida. The planning standards used for this project are based on the anticipated impacts of a named storm event or major flood impacting Palm Beach County, Florida. The AUTHORITY intends to enter into contingency Agreement(s) as further defined herein, to provide emergency debris removal and disposal services as required by the AUTHORITY.

2. INTRODUCTION:

A. The AUTHORITY'S disaster recovery planning includes considerations for removing and processing the volumes and types of debris expected to be generated by a major disaster such as a hurricane or major flood and includes procedures for disposing of that debris. The planning approach is formulated in part on the concept of strategic pre-positioning of plans and resources necessary for timely, safe, coordinated recovery operations, including removal of debris from public property and rights-of-way throughout Palm Beach County using a combination of county, municipal, and CONTRACTOR forces.

B. If activation is required, the AUTHORITY intends to activate contracts on an as-needed basis as solely determined by the AUTHORITY. The AUTHORITY intends to activate the CONTRACTORS in the order of final ranking as best meets the needs of the AUTHORITY. The AUTHORITY reserves the right in its sole and unfettered discretion, to assign/reassign any or all CONTRACTORS at any time as may be deemed appropriate depending upon the circumstance(s), the event, or any other condition which may warrant such action.

C. The AUTHORITY envisions the need for four (4) CONTRACTORS to carry out the debris removal and disposal work throughout Palm Beach County. The CONTRACTOR must have the experience and capability to manage a major workforce with multiple subcontractors and to cover the expenses associated with a major recovery operation prior to the initial AUTHORITY payment and between subsequent payments, as well as the capacity to provide the necessary bonds and insurance. The CONTRACTOR must also have an established management team, an established network of resources to provide the necessary equipment and personnel, comprehensive debris removal, volume reduction operations plan, and demonstrable experience in major disaster recovery projects.

D. The Agreement(s) to be awarded under this RFP will be contingency Agreement(s) that will be activated only in the face of an emergency. As such, no compensation will accrue to the CONTRACTOR unless and until the Agreement is activated either in anticipation of a natural disaster or immediately after such disaster.

E. The CONTRACTOR who receives an Agreement for the work, will be required to participate in certain AUTHORITY directed disaster recovery training and/or exercises, 1 to 2 days each year, at no cost to the AUTHORITY.

F. The AUTHORITY does not guarantee a CONTRACTOR will be activated if awarded an Agreement.

3. PLANNING STANDARD FOR DEBRIS REMOVAL AND DISPOSAL:

The AUTHORITY'S goal is to complete the debris removal and disposal process in 120 days following the storm event. This assumes that the entire area of the county will be accessible within that period. Due to the low elevation and potential for flooding, some areas might not be accessible for several weeks after a major natural disaster. The CONTRACTOR must be aware that it might not be possible to initiate operations in all parts of the county simultaneously immediately after a storm.

4. DEBRIS MANAGEMENT:

A. Planning for debris management operations is a function of the AUTHORITY as a supporting agency to the Palm Beach County Department of Engineering and Public Works. The AUTHORITY'S Emergency Management Coordinator will direct the debris removal and disposal operations.

B. In addition to using AUTHORITY forces and equipment, the AUTHORITY intends to execute four (4) debris removal and disposal Agreements on a contingency basis for the purpose of having CONTRACTOR(S) immediately available and committed to assisting the AUTHORITY in the aftermath of a major disaster. Each CONTRACTOR holding a debris removal and disposal Agreement will serve as a General CONTRACTOR for the purpose of debris removal and disposal operations and will be able to use his/her own and subcontractor resources to meet the obligations of the Agreement. It is anticipated, but not required, that the CONTRACTOR will use both local and non-local subcontractors.

C. When a major disaster occurs or is imminent, the AUTHORITY intends to contact the highest two (2) or three (3) ranked CONTRACTORS holding debris removal and disposal Agreements to advise them of the AUTHORITY'S intent to activate the Agreement(s). Debris removal will

generally be limited to debris in, upon, or brought to county residential private and public streets and roads, rights-of-way, municipal properties and facilities, and other public sites (this includes debris from customers assessed for residential solid waste and recycling collection services by the AUTHORITY). The CONTRACTOR will be responsible for determining the method and manner of debris removal and lawful disposal operations. Disposal of debris will be at AUTHORITY approved TDMS or landfill sites. The CONTRACTOR will be responsible for the lawful disposal of all debris and debris-reduction by-products generated at all TDMS.

D. When a major disaster occurs or is imminent, the AUTHORITY will initially send out an Alert to the selected CONTRACTOR(S). This Alert will serve to activate the lines of communication between the CONTRACTOR representatives and the AUTHORITY. Subsequently, the AUTHORITY will issue the first Task Order which will authorize the CONTRACTOR to send an Operations Manager to the AUTHORITY within 24 hours of receiving such Task Order, to begin planning for the operations and mobilizing the personnel and equipment as necessary to perform the stipulated work. This first Task Order will also direct the CONTRACTOR to execute the required Performance and Payment Bond. The CONTRACTOR should anticipate receiving this first Task Order 24 to 72 hours before projected landfall of a hurricane or major flood. Depending on the nature of the storm and circumstances, the AUTHORITY may activate more than one (1) CONTRACTOR. CONTRACTOR(S) will generally be activated in order of final ranking.

E. Specific task orders will be issued to select CONTRACTORS based on the best interest of Palm Beach County. The AUTHORITY reserves the right to assign work or task orders to various CONTRACTORS based on capability. The AUTHORITY does not guarantee a cradle to grave pricing arrangement but reserves the right to pick and choose CONTRACTORS based on ranking.

F. The general concept of debris removal operations includes multiple, scheduled passes of each site, location, or right-of-way. This will allow residents to return to their properties and bring debris to the private and public right-of-way as recovery progresses. The AUTHORITY will prescribe the specific schedule to be used after ascertaining the scope and nature of the disaster's impacts.

G. The AUTHORITY will make every effort to identify strategically located public and private TDMS throughout the county prior to a natural disaster. Depending upon the severity of the natural disaster, additional public and private TDMS will be identified as needed.

H. The CONTRACTOR will operate the public and private TDMS and only CONTRACTOR vehicles and others specifically authorized by the AUTHORITY will be allowed to use the sites. Only one (1) level of subcontractor will be allowed to operate the sites. There will be no multi-tiered subcontractors (sub of a sub) allowed to operate TDMS. The CONTRACTOR is responsible for all activity at TDMS operated by their subcontractor and must have an employee on site at all times to oversee daily operations. **The locations of both publicly and privately owned sites currently under consideration are shown on Attachment B.** Additional public and privately owned TDMS may become available as plans develop. The availability of both private and public TDMS may change during the term of the Agreement.

I. The AUTHORITY may also establish designated homeowner drop-off sites on a public right-a-way (PROW) for communities. The CONTRACTOR will be responsible for removing all eligible debris from those approved designated locations at the direction of the Emergency Management

Coordinator or designee.

J. Curbside segregation of debris and disaster-generated or related wastes will be an element of the AUTHORITY'S disaster recovery program. The debris removal and disposal CONTRACTOR will be required to aid in the segregation and waste stream management processes. Any Household Hazardous Waste (HHW) encountered by the debris removal CONTRACTOR is to be set aside. HHW disposal will be the responsibility of the resident. The AUTHORITY will designate HHW drop-off locations.

K. The following items are considered HHW for the purpose of this Agreement:

1. Used Oil
2. Batteries
3. Paint
4. Aerosol spray cans
5. Pesticides
6. Antifreeze
7. Fluorescent light bulbs
8. Propane tanks (household size)

L. The CONTRACTOR will setup a lined containment area and separate any HHW inadvertently delivered to a TDMS.

M. Commercial and industrial hazardous waste such as chemicals, gas containers, transformers, and any other form of hazardous or toxic matter will be set aside for collection and disposal by a Hazardous Materials Removal and Disposal Contractor who will be selected by the AUTHORITY.

N. Putrescible residential garbage will be collected by AUTHORITY franchise waste haulers and is not to be collected or transported by CONTRACTOR forces. The AUTHORITY may enter into a separate emergency debris removal agreements with each franchise hauler to operate their dedicated self-loading collection equipment within their Service Area for FEMA eligible storm debris removal.

5. SCOPE OF WORK/OVERVIEW:

This section is divided into three (3) subsections:

5.1 **Debris Removal and Disposal Operations** from residential public and private streets, roads and rights-of-way and delivered to a TDMS designated by the Authority.

5.2 **TDMS Operations** which includes daily operations as well as reclamation of the site to its pre-storm condition or as directed by the AUTHORITY Emergency Management Coordinator

5.3 **Processing, Loading and Hauling Material** from TDMS to final destination.

A. Specific work authorizations by the AUTHORITY will be through written Task Orders. Task Orders will define the job to be accomplished, location of job, timeframe for completion, rates to be used, etc. Any job with requirements or rates not covered by

this Proposal will be negotiated. The AUTHORITY reserves the right to extend operations on a weekly basis. Task Orders will be executed bilaterally. Performance will be by the metrics established in the Task Order(s). After 1/3 and again after 2/3 of the stipulated number of days of work in the Task Order have elapsed, the CONTRACTOR(S) shall provide written progress report to the AUTHORITY for review and acceptance. The AUTHORITY shall have the right to correct for CONTRACTOR'S default or underperformance by any means it deems in its best interest at the CONTRACTOR'S expense.

B. The CONTRACTOR shall commence mobilization immediately upon receipt of the mobilization Task Order meeting the following progress patterns: 48 hours- collection activity within assigned Collection Service Area. Within ten (10) calendar days CONTRACTOR shall have 100% of all necessary equipment operating within all Collection Service Areas. This represents a minimum response schedule and does not restrict an earlier response. Subsequently, the AUTHORITY may issue additional Task Orders to define more precisely the work to be accomplished or to authorize additional work. The CONTRACTOR shall perform in accordance with each Task Order in all designated Collection Service Areas established by the AUTHORITY. Each Task Order will be uniquely and sequentially numbered.

C. The CONTRACTOR is authorized to collect debris during daylight hours, seven (7) days per week. Any deviations from this schedule will require AUTHORITY approval.

D. The CONTRACTOR must be duly licensed to perform the work in accordance with the State of Florida statutory requirements. The CONTRACTOR shall obtain all permits necessary to complete the work. The CONTRACTOR shall be responsible for determining what permits are necessary to perform under the Agreement. Copies of all permits shall be submitted to the AUTHORITY's Director, Customer Information Services prior to issuance of the first Task Order.

E. The quantity of work required to complete the Agreement resulted from this RFP is estimated. The actual effort required may be more or less than the estimated amount shown in the Proposal Form 3 – Price Proposal. Payment will be made at the unit rates proposed. The output will be verified by the AUTHORITY's Director, Customer Services in the daily operational report. Should hourly rates be used to pay for certain equipment other than preventative maintenance, not in excess of fifteen (15) minutes in a normal workday, will be paid at the regular hourly rate. Preventative maintenance or down time resulting from equipment failure, routine maintenance and fueling that exceeds fifteen (15) minutes will be considered unacceptable work and non-payment of that time will be rounded off to the half hour of all hours where delays occur. Preventative maintenance is defined as the usual field maintenance to keep equipment in operating condition without the use of extensive shop equipment. Fueling of equipment will be considered as part of preventative maintenance.

F. The CONTRACTOR shall be responsible for correcting any notices of violations issued as a result of the CONTRACTOR'S or any subcontractor's actions or operations during the performance of this Agreement. Corrections for any such violations shall be at no additional cost to the AUTHORITY.

G. The CONTRACTOR shall conduct the work so as not to interfere with the disaster response and recovery activities of federal, state or local governments or agencies, or of any public utilities or other private contractor.

H. The CONTRACTOR shall provide contact information for all key personnel to the AUTHORITY that shall include name, phone number, cellular phone number and email address. The CONTRACTOR and its agents shall respond in a timely manner to all AUTHORITY inquiries at all times.

6. DEBRIS REMOVAL AND DISPOSAL OPERATIONS

6.1 General:

A. The purpose of this section is to define the requirements for debris removal and disposal operations after any catastrophic disaster within Palm Beach County. The AUTHORITY may designate zones for collection and disposal locations for debris collected. CONTRACTORS will be tasked with a service area(s) for this specific work immediately after the activation of the Agreement.

B. For work performed on a Time and Materials basis, all hourly equipment rates shall include the cost of the maintenance, fuel, repairs, overhead, profit, insurance, and all other costs associated with the equipment including labor and operator.

6.2 Services:

A. The CONTRACTOR shall provide equipment, operators, and laborers for debris removal operations. The CONTRACTOR shall provide all labor and materials necessary to fully operate and maintain (including fuel, oil, grease, and repairs) all equipment under this Agreement.

B. All rates are to include the cost of protective clothing (to include hardhats and steel-toed boots), fringe benefits, hand tools, supervision, transportation, lodging, meals, and all other costs.

C. The work shall consist of clearing and removing disaster generated debris as directed by the AUTHORITY Emergency Management Coordinator. CONTRACTOR shall provide collection equipment the day following a natural disaster or as directed by the AUTHORITY and shall provide equipment sufficient to collect a minimum of 50,000 cubic yards of debris per day within ten (10) calendar days of collection commencement (Past AUTHORITY natural disaster cleanup records show that ten (10) days' following disaster, 95,000-126,000 cubic yards of debris collected per day). Failure to provide sufficient equipment necessary to collect required amount may result in the AUTHORITY entering into a separate agreement with another contractor for collection services.

6.2.1 Removal of Hazardous Leaning Trees and Hanging Limbs

a) Under this contract, work shall consist of all labor, equipment, fuel, and miscellaneous costs necessary to remove all hazardous trees twelve inches (12") or greater in diameter, measured three feet (3') from the base of the tree

or chest height and hanging limbs two inches (2") or greater in diameter existing in private and public right-of-way. Further, debris generated from the removal of hazardous trees and hanging limbs two inches (2") or greater existing in private and public right-of-way will be placed at the public right-of-way for removal as vegetative debris. Hazardous leaning trees less than twelve inches (12") in diameter, measured three feet (3') from the base of the tree or at chest height, will be flush cut, and placed on the public right-of-way to be removed as vegetative debris. The AUTHORITY will not compensate the CONTRACTOR for leaning trees less than twelve inches (12") in diameter on a unit rate basis.

b) Removal and transportation of hazardous trees twelve inches (12") or greater in diameter and hanging limbs two inches (2") or greater in diameter existing in private and public right-of-way will be performed as identified by the AUTHORITY. All disaster specific eligibility guidelines regarding size and diameter of leaning trees will be communicated to the CONTRACTOR, in writing, by the AUTHORITY. In order for leaning or hazardous trees to be removed and eligible for reimbursement, the tree must satisfy a minimum of one (1) of the following requirements:

   i) The tree is leaning in excess of 30° degrees in a direction that poses an immediate threat to public health, welfare, and safety.
   ii) The tree is dead, twisted, or mangled as a direct result of the storm and a certified arborist can attest to the fact that the tree will die and potentially create a falling hazard to the public.

6.2.2 Removal of Hazardous Stumps

a) Under this contract, work shall consist of all labor, equipment, fuel, and miscellaneous costs necessary to remove all hazardous uprooted stumps 24 inches or greater in diameter, measured 24 inches from the base of the tree existing in private and public right-of-way. Further, debris generated from the removal of uprooted stumps existing in private and public right-of-way will be placed at the public right-of-way for removal as vegetative debris. Stumps measured 24 inches from the base of the tree and less than 24 inches in diameter will be considered normal vegetative debris and removed in accordance with 3.1.2. The AUTHORITY will not compensate hazardous stumps less than 24 inches in diameter on a unit rate basis and instead will be considered normal vegetative debris. The diameter of stumps less than 24 inches will be converted into a cubic yardage volume based on the published FEMA stump conversion table (In accordance with current FEMA public assistance guidelines) and removed under the terms and conditions of 2.6.2.

b) Removal and transportation of hazardous uprooted stumps existing in the private and public right-of-way and private property will be performed as identified by the AUTHORITY. All disaster specific eligibility guidelines regarding size and diameter of hazardous stumps will be communicated to the CONTRACTOR, in writing, by the AUTHORITY. In order for hazardous stumps to be removed and eligible for reimbursement, the stump must satisfy the following requirement:

(i) Over 50% of the tree crown is damaged or broken and heartwood is exposed.
(ii) Tree stumps that are not attached to the ground will be considered normal vegetative debris and subject to removal under the terms and conditions of 2.1. The cubic yard volume of the unattached stump will be based off of the diameter conversion using the published FEMA stump conversion table (In accordance with current FEMA public assistance guidelines).

The AUTHORITY or its representative will measure and certify all stumps before removal.

6.2.3 Collection of Storm Generated Residential Vegetation and Construction and Demolition Debris:

a) It is the AUTHORITY'S goal to ensure that Vegetation and Construction/Demolition debris remain separate task orders for the collection of Vegetation and Construction loads. Mixing of loads by the CONTRACTOR at the road right of way will not be tolerated.

Work may include:

(i) First pass to clear debris from emergency evacuation routes, access roads to critical facilities and all primary roadways.
(ii) Clearing debris from residential private and public road right of ways.
(iii) Loading the debris.
(iv) Hauling the debris to an approved AUTHORITY TDMS or an authorized private construction demolition debris recycling facility or landfill.
(v) Dumping the debris at the TDMS or direct haul to an Authority permitted approved private Construction and Demolition Debris (C&D) recycling facility or Authority authorized landfill.

b) Debris delivered to a TDMS, private C&D recycling facility or authorized landfill will be paid based on the per cubic yard price according to the Proposal Form 3 – Price Proposal.

6.2.4 Hourly Rate Clearing:

a) From 0-70 hours following a disaster CONTRACTOR, as designated by the AUTHORITY, shall provide the clearing services on an hourly rate that shall include the following:

(i) Clear debris from emergency evacuation routes, access roads to critical facilities, and primary roadways.
(ii) Perform emergency removal of debris if needed for life-saving measures.
(iii) Conduct daily briefings with debris managers and other officials to update progress and discuss issues.
(iv) Develop a traffic control plan along potential haul routes and at debris management and disposal sites.

b) The CONTRACTOR shall not move from one designated Collection Zone to another area without prior approval from the AUTHORITY's Director, Customer Information Services or designee. CONTRACTORS and/or subcontractors that move to a designated Collection Service Area without prior AUTHORITY approval may be terminated immediately. The AUTHORITY reserves the right to relocate CONTRACTOR to other Collection Service Areas based on need and ability to perform required work at an acceptable level. The AUTHORITY reserves the right to immediately terminate CONTRACTOR and any subcontractor who fails to provide service in strict accordance with guidelines set forth by FEMA and the AUTHORITY.

c) The AUTHORITY or designee shall forward all claims of damage to the CONTRACTOR daily. CONTRACTOR shall provide all contact information, including name, phone number, cellular phone number, fax number and email address, for personnel responsible for resolving all claims of damage. CONTRACTOR must respond to all claims of damage within 24 hours and resolve within ten (10) calendar days. Mailboxes must be repaired or replaced within two (2) calendar days. CONTRACTOR is responsible for all damage caused by his crew and/or subcontractors in the performance of debris removal.

d) In the event the CONTRACTOR fails to repair damages as a result of the Contractor's equipment failure or negligence within the time provided in this Agreement, the AUTHORITY or designee may arrange for the repairs and assess the CONTRACTOR for the cost of the repairs and any applicable administrative charges. Any disputes as to damage responsibility will be presented to the Director, Customer Information Services or designee for review. The decision of the Director, Customer Information Services or designee will be final.

6.3 Equipment:

A. All trucks and equipment must be in compliance with all applicable federal, state, and local rules and regulations. Trucks used to haul debris must be capable of rapidly dumping their load without the assistance of other equipment, be equipped with a tailgate that will effectively contain the debris during transport that will permit the trucks to be filled to capacity. Cyclone fence may be used as temporary tailgates if they comply with the following specifications:

1. Fencing must be permanently attached to one side of the truck bed.
2. After loading, the fencing must be tied to the other side of the truck bed at two places with heavy gauge wire.
3. Fencing must extend to the bottom of the bed.
4. After loading, bottom of fencing shall be tight against the bed of the truck and secured at a minimum of two locations.
5. Solid iron metal bars must be secured to both sides of the fencing.
6. There shall be no hand loaded equipment allowed.

B. The AUTHORITY or designee shall complete certifications indicating the type of vehicle, make and model, license plate number, equipment number, and measured maximum

volume, in cubic yards, of the load bed of each piece of equipment utilized to haul debris. The measured volume of each piece of equipment shall be calculated from actual internal physical measurement performed and certified by the CONTRACTOR. Maximum volumes may be rounded up to the nearest cubic yard. The reported measured maximum volume of any load bed shall be the same as shown on the placards affixed to each piece of equipment. The AUTHORITY reserves the right to re-measure trucks and trailers at any time to verify reported capacity. If a truck and/or trailer are re-measured and the yardage capacity is determined to be lower, the lower yardage volume will be retroactive to the initial load and total volume adjusted accordingly.

C. All trucks and trailers utilized in hauling debris shall be equipped with a tailgate that will permit the vehicle to be loaded to capacity and effectively contain the debris on the vehicle while hauling. If installed, all sideboard extensions must remain in place throughout the operation, or the vehicle must be re-measured and remarked. All extensions to the bed are subject to acceptance or rejection at the sole discretion of the AUTHORITY or designee.

D. Trucks or equipment designated for use under this Agreement shall not be used for any other work during working hours. The CONTRACTOR shall not solicit work from private citizens or others to be performed in the designated Collection Service Area during the period of this Agreement. Under no circumstance will the CONTRACTOR mix debris hauled for others with debris hauled under this Agreement. Failure to comply will result in no payment to CONTRACTOR and the operator and vehicle will be declared ineligible to provide any additional emergency debris collection services. Any and all unapproved changes to placard will result in no payment to CONTRACTOR and the operator and vehicle will be declared ineligible to perform any additional emergency debris collection services.

6.4 Securing Debris

The CONTRACTOR shall be responsible for properly and adequately securing debris on each piece of equipment utilized to haul debris. Prior to leaving the loading site, the CONTRACTOR shall ensure that each load is secure and trimmed so that no debris extends horizontally beyond the bed of the equipment in any direction. All loose debris shall be reasonably compacted during loading and secured during transport. Tarps or other coverings shall be provided by the CONTRACTOR to prevent materials from falling or being blown from the bed. Loads not properly tarped or otherwise covered will not be allowed to dispose at any AUTHORITY approved TDMS which may result in non-payment to CONTRACTOR.

6.5 Equipment Signage

Prior to commencing operations, the AUTHORITY or designee shall affix to each piece of equipment, signs or markings indicating the Owner Operator's name and a unique equipment identification number. One sign shall be placed on each side of the equipment. For those trucks, trailers and other equipment intended to haul debris, the maximum volume, in cubic yards, of the load bed shall also be shown. Each operator shall keep AUTHORITY certification with them at all times. Placards must remain on both sides of equipment.

6.6 Other Considerations

A. The CONTRACTOR shall assign and provide an Operations Manager (OM) to the AUTHORITY TDMS to serve as the principal liaison between the AUTHORITY Director, Customer Services or designee and the CONTRACTOR'S forces. The assigned OM must be knowledgeable of all facets of the CONTRACTOR'S operations and have authority in writing to commit the CONTRACTOR. The OM shall be on call 24 hours per day, seven (7) days per week and shall have electronic linkage capability for transmitting and receiving relevant contractual information and make arrangements for onsite accommodations. This linkage shall provide immediate contact via cell phone, Fax machine, and have Internet capabilities. The OM will participate in daily meetings and disaster exercises, functioning as a source to provide essential element information. The OM will report to the AUTHORITY Director, Customer Services or designee. This position will not require constant presence; rather the OM will be required to be physically capable of responding to the AUTHORITY Emergency Management Coordinator within 30 minutes of notification.

B. The CONTRACTOR shall be responsible for control of pedestrian and vehicular traffic in the work area. At a minimum, one flag person should be posted at each approach to the work area.

C. The CONTRACTOR shall supervise and direct the work, using skilled labor and proper equipment for all tasks. Safety of the CONTRACTOR'S personnel and equipment is the responsibility of the CONTRACTOR. Additionally, the CONTRACTOR shall pay for all materials, personnel, taxes, and fees necessary to perform under the terms of this contract.

D. Payment for debris hauled will be based on the quantity of debris hauled in cubic yards. Debris hauled to a TDMS will require a validated load ticket. Drivers will be given an electronic load tickets at the loading site by an AUTHORITY loading site monitor. The quantity of debris hauled will be estimated in cubic yards at the TDMS by an AUTHORITY TDMS monitor. The estimated quantity will be recorded on the electronic load ticket. The AUTHORITY TDMS monitor will retain one copy of the paper load ticket and the driver will retain the remaining copies of the load ticket. Debris being hauled to a permanent landfill will be paid based on cubic yards recorded on an approved electronic or paper load ticket. Payment will be made against the CONTRACTOR'S invoice once site monitor and CONTRACTOR load tickets and/or scale tickets match. Load tickets not properly completed and signed will not be paid.

7. TEMPORARY DEBRIS MANAGEMENT SITES (TDMS) OPERATIONS

7.1 General

A. The purpose of this section is to define the requirements for TDMS Operations after any catastrophic disaster within Palm Beach County.

B. The CONTRACTOR shall use only TDMS designated by the AUTHORITY Emergency Management Coordinator.

C. The TDMS foreman shall direct all vehicular traffic and load drop-off operations. Different types of debris shall be kept in separate piles at the TDMS. At a minimum, one flag person shall be posted at each TDMS for traffic control and to direct unmixed loads to proper location (by debris type) to be offloaded. CONTRACTOR shall be responsible for sorting and proper placement of all loads not dumped in appropriate location which results in mixing the once separated debris at no charge to the AUTHORITY.

D. The CONTRACTOR shall begin grinding vegetative debris within five (5) calendar days of TDMS opening date and removing mulch/wood chips within ten (10) calendar days of site opening date. It is very important your plan provides specific information for the final disposal destination location of the mulch / wood chips removed from the public or private TDMS. The CONTRACTOR shall begin removal of Construction and Demolition/mixed debris from TDMS to an approved final destination within five (5) days of site opening date.

7.2 TDMS Services

7.2.1 Site Setup/Preparation and Site Closeout/Restoration Site setup/preparation and site closeout/restoration shall be compensated on a time and materials basis in accordance with the hourly rates provided in the Proposal Form 3 – Price Proposal Site set-up/preparation/closeout/restoration includes: clearing, stripping, hauling, fill placement, constructing/deconstructing processing pads, limerock or crushed concrete access roads, seeding, and any other similar activity necessary to make the site usable for its intended purposes and to return the site to its original condition. Do not include any materials in calculating the hourly rates in the Proposal Form 3 - Price Proposal. Important- Phase I TDMS Reclamation is included in the 2.0 cubic yard price. Phase I Reclamation requires the contractor to remove all debris from the TDMS including small particles mixed with soil and grading the entire area. The only site closeout cost will be removal of road base material and seeding as approved by the Authority.

7.2.2 TDMS Operations and Material Processing

a. TDMS operations and material processing shall be compensated in accordance with the unit prices provided in the Proposal Form 3 - Price Proposal. The CONTRACTOR shall provide equipment, operators, and laborers for TDMS operations as specified by Task Order. Unit prices provided in the Proposal Form 3 - Price Proposal, shall include all labor and materials necessary to fully operate and maintain (including fuel, oil, grease, repairs, operator, mobilization, demobilization, overhead, profit, lodging and insurance) all equipment under this Agreement. Each Inspection Tower shall be equipped with two (2) portable toilets. Toilets shall be provided immediately upon completion of tower assembly. CONTRACTOR shall provide a water truck for the purpose of applying to site surface to minimize dust. The AUTHORITY shall provide a front-load garbage container and collection service of the container at each TDMS. CONTRACTOR shall be responsible for cleaning up all trash and litter generated on the site from daily operations and depositing into the container for collection. The entrance roadway and surrounding area within ½ mile of the site's entrance shall be cleaned daily by the CONTRACTOR. All pre-storm

identified sites shall be opened by the CONTRACTOR within three (3) calendar days after receiving approval from the AUTHORITY to operate the TDMS. Failure to open sites with proper equipment and necessary personnel will result in liquidated damages of $10,000 per day. All rates shall include the cost of protective clothing (to include hardhats and steel-toed boots), fringe benefits, hand tools, supervision, transportation, lodging, meals, and any other costs. The work shall consist of managing the operations of a TDMS and performing debris reduction by air curtain incineration and/or grinding of storm generated debris as directed by the AUTHORITY Emergency Management Coordinator

b. The AUTHORITY plans to use two types of TDMS.

   1. Vegetative TDMS will be devoted to the reduction of clean woody debris by either burning or grinding. The AUTHORITY expects the material to be recycled and or beneficially re-used if processed by grinding. It is important to provide a detailed plan on how this material will be recycled or beneficially reused after grinding / reduction.

   2. Depending upon the size and type of devastation the AUTHORITY may require a separate Construction & Demolition (C&D) staging area, mixed debris staging area and a separate Household Hazardous Waste staging area. The AUTHORITY requests that PROPOSER implements recycling and or reduction programs to minimize the quantity of construction debris material to be land filled.

c. Material coming into the Vegetative or C&D TDMS will be measured and paid for by the cubic yard according to the Proposal Form 3 – Price Proposal. Material removed and transported from a C&D TDMS will be measured and paid by the cubic yard according to the Proposal Form 3 – Price Proposal.

d. Locations of all TDMS will be approved by the AUTHORITY. The AUTHORITY Emergency Management Coordinator must approve site improvements before work begins and any costs, other than those in the Proposal Form 3 – Price Proposal, that might have been negotiated under a Task Order shall be documented for payment.

e. Material processed at a TDMS by either grinding or burning will be measured using cubic yards from incoming load tickets. Material entering a TDMS will be deposited in manageable piles.

7.3 Reporting

The CONTRACTOR shall submit a report to the AUTHORITY Emergency Management Coordinator or designee by close of business each day of the term of the Task Order. Each report shall contain, at a minimum, the following information:

1. Contractor's Name
2. Contract Number

3. Daily and cumulative hours for each piece of equipment, *if appropriate*
4. Daily and cumulative hours for personnel, by position, *if appropriate*
5. Volumes of debris handled

Failure to provide audit quality information by 5:00 p.m. of the following day of operation will subject CONTRACTOR to non-payment in each instance at the sole discretion of the AUTHORITY.

7.4 Other Considerations

A. The CONTRACTOR shall supervise and direct the work, using skilled labor and proper equipment for all tasks. Safety of the Contractor's personnel and equipment is the responsibility of the CONTRACTOR. Additionally, the CONTRACTOR shall pay for all materials, personnel, taxes, and fees necessary to perform under the terms of this contract.

B. The CONTRACTOR shall be responsible for control of pedestrian and vehicular traffic in the work area. In the event a TDMS must be closed due to CONTRACTOR equipment or operational failures, CONTRACTOR shall be liable for liquidated damages in the amount of $25,000.00 per day for every day the site has to remain closed.

7.5 Debris Clearance (for access) from Right-of-Ways and Public Property

A. The AUTHORITY provides support to Palm Beach County Government for Debris Management, including the clearance (moving debris from the middle of the road, etc.) of debris from right-of- ways and public property. Palm Beach County intends to perform debris clearance for access with its own forces or under existing contractual Agreements between the County and local firms. However, in a significant disaster, these resources may be insufficient to perform the clearance activities in a timely manner.

B. This debris clearance is to be considered supplemental and optional service. It is anticipated that debris clearance activities would be conducted, if needed, on a time and material basis using the rates in the Proposal Form 3 – Price Proposal.

8. PROCESSING, LOADING AND HAULING MATERIAL:

CONTRACTOR shall provide all necessary labor, material and equipment to process, load and haul wood chips from TDMS in Palm Beach County to final destination for disposal. CONTRACTOR shall provide all necessary labor, material and equipment to load and haul construction and demolition debris and/or mixed debris from TDMS as directed by the AUTHORITY. The AUTHORITY reserves the right to contract with other firms to process, load and haul wood chips and construction and/or mixed debris to a final destination as may best meet the needs of the AUTHORITY. All wood chips, construction and/or mixed debris shall be disposed of in accordance with all Local, State of Florida and Federal guidelines.
CONTRACTOR will provide detailed listing to the AUTHORITY of the following:

1. Quantity (loads and cubic yards)
2. Owner information
3. Site where mulch / reduced yard waste material generated at TDMS is disposed, to include

address/GPS location.

4. AUTHORITY will determine final private or public Construction/Demolition debris disposal/recycling facility.

9. MISCELLANEOUS REQUIREMENTS

9.1 TDMS Foreman

A. The TDMS foreman must be an employee of the CONTRACTOR and is responsible for management of all operations of the site to include, traffic control, dumping operations, segregation of debris, burning, grinding, and safety.

B. The TDMS foreman will be responsible for monitoring and documenting equipment and labor time and providing the daily operational report to the AUTHORITY Director, Customer Services or designee.

9.2 TDMS Night Foreman

A. The TDMS night foreman must be an employee of the CONTRACTOR and is responsible for managing all night operations approved by the AUTHORITY.

B. The TDMS night foreman will be responsible for monitoring and documenting equipment and labor time and providing the daily operational report to the AUTHORITY Director, Customer Information Services or designee.

9.3 TDMS Management Plan

A. Once the TDMS is identified by the AUTHORITY, the CONTRACTOR will provide a Site Management Plan.

B. Three (3) copies of the plan are required. The plan shall be drawn to a scale of 1" = 50' and address the following functions:

1. Access to site
2. Site preparation -clearing, erosion control, and grading
3. Traffic control procedures
4. Safety
5. Segregation of debris
6. Location of ash disposal area, hazardous material containment area, CONTRACTOR work area, and inspection tower
7. Location of incineration operations, grinding operation (if required). Burning operations require a 100-foot clearance from the stockpile and a 1000-foot clearance from structures.
8. Specific plan including and location for the final disposal destination of the mulch/wood chips generated at the public or private TDMS.

9.4 Inspection Tower

The CONTRACTOR shall construct an inspection tower at each TDMS within three (3) calendar days of natural disaster. The tower shall be constructed using pressure treated wood or steel scaffold. The floor elevation of the tower shall be 10-feet above the existing

ground elevation. The floor area shall be a minimum 8' by 8', constructed of 2"x 8" joists, 16" O.C. with 3/4" plywood supported by a minimum of four 6" x 6" posts. A 4-foot high wall constructed of 2" x 4" studs and ½" plywood shall protect the perimeter of the floor area. The floor area shall be covered with a roof. The roof shall provide a minimum of 6'-6" of headroom below the support beams. Steps with a handrail shall provide access to the tower. Inspection towers must provide a dry area for employees and meet all FEMA and OSHA requirements.

9.5 Grinding Operation

The CONTRACTOR shall have grinder(s) on site and in operation within five (5) calendar days following a natural disaster. Failure to provide sufficient grinding capacity to accommodate expected incoming volumes and allow site to operate in an efficient manner within five (5) calendar days shall result in liquidated damages of $10,000 per day. There shall be no period longer than 24 hours in which grinding activity may stop due to equipment or operational failure. Failure to provide back-up equipment within 24 hours shall result in liquidated damages of $2,000 per hour per approved hours of grinding operation per day until grinding activity resumes.

9.6 Household Hazardous Waste Containment Area

The CONTRACTOR shall construct a hazardous material containment area at each TDMS. The area shall be 30' x 30'. The perimeter shall be lined with hay bales and staked in place. The area shall be lined with a heavy gage plastic to provide a waterproof barrier. Additional plastic sufficient to cover the area is required to prevent rain from entering the containment area. Site run-off must be redirected from the containment area by site grading.

10. PERFORMANCE OF CONTRACTOR

A. It is the intent of this Agreement to ensure that the CONTRACTOR provides a timely quality level of services. To this end, all complaints received by the Emergency Management Coordinator or designee and reported to the CONTRACTOR shall be promptly resolved pursuant to the provisions of this Agreement.

B. The Emergency Management Coordinator or designee may levy administrative charges for the following infractions:

1. Failure to open pre-storm identified sites within three (3) calendar days of after being tasked by the AUTHORITY liquidated damages of $10,000 per day for each day not opened.
2. Closure of TDMS due to CONTRACTOR equipment or operational failures liquidated damages of $25,000 per day, for each day site must remain closed.

C. Failure to provide back-up grinder(s) within 24 hours of equipment breakdown liquidated damages of $2,000 per hour per approved grinding hours of operation per day.

D. CONTRACTOR may also be subject to non-payment and liquidated damages of $200 for each occurrence of the following infractions:

1. Failure to provide audit quality information by 5:00 p.m. of the following day of

operation.
2. Loads not properly tarped or otherwise covered.
3. Mixing debris hauled from other sources with debris hauled under this Agreement.
4. Mixing vegetation debris with C & D material.

E. CONTRACTOR may be immediately terminated and not paid for the following:

1. Collection of any non-eligible, non-AUTHORITY approved stumps or debris.
2. Moving to another designated Collection Service Area without prior AUTHORITY approval.
3. Failure to provide service in accordance with guidelines set forth by FEMA and the AUTHORITY.
4. Soliciting work from private citizens or others to be performed in the designated Collection Service Area during the period of this Agreement.
5. Alteration of placards placed on certified trucks and/or trailers.

Any disputes regarding Performance of Contractor will be presented to the Emergency Management Coordinator or designee for review. The Emergency Management Coordinator or designee shall complete review and make determination within three (3) calendar days. Decisions of the Emergency Management Coordinator or designee shall be final.

EXHIBIT "B"

FEE SCHEDULE

PROPOSAL FORM 3 – PRICE PROPOSAL

PART A – VOLUME BASED PRICING FOR 3,000,000 CUBIC YARD (CY) DEBRIS DISASTER

ITEM/DESCRIPTION	ESTIMATED QUANTITY	UNIT	PRICE PER CY	EXTENSION
1.0 Public Property and Right of Way Collection, Loading and Hauling to a designated TDMS.				
A. Vegetation	2,500,000	CY	$9.75	$24,375,000
B. Construction Debris / Mixed Debris	500,000	CY	$9.75	$4,875,000
2.0 TDMS operation to include placement of monitoring towers, portable toilets, keeping on-site and adjacent roads area clean of trash and garbage, debris acceptance, pile management, and Phase I Reclamation.	3,000,000	CY	$2.25	$6,750,000
3.0 Processing of debris through grinding and/or chipping.	2,500,000	CY	$2.25	$5,625,000
4.0 Loading, hauling and disposing wood chips to final destination. ***(This rate includes disposal cost)***	1,000,000	CY	$8.95	$8,950,000
5.0 Loading and hauling of construction debris and/or mixed debris from TDMS to a permitted C&D recycling facility or any other designated Disposal Facility. ***(This rate <u>shall not</u> include disposal cost). Based on miles from TDMS to final destination– 1 way.***				
A 0 ≤ 20 miles	500,000	CY	$3.60	
B. > 20 ≤ 50 miles	500,000	CY	$4.95	
C. > 50 ≤ 100 miles	500,000	CY	$7.95	
AVERAGE: (Item 6.0 A-C)				
AVERAGE: (Item 5.0 A-C) **X 500,000** CY =				$ 8,250,000
TOTAL PROPOSAL PRICE: (Items 1.0 - 5.0)				$ 58,825,000

PROPOSER MUST PROVIDE PRICE FOR ALL LINE ITEMS 1 THRU 5. FAILURE TO DO SO MAY RENDER YOUR PROPOSAL TO BE DEEMED NON-RESPONSIVE.

Unit Prices, unless otherwise indicated, shall include all labor (operators, laborers, supervisors) and materials including but not limited to: supplies, equipment maintenance, repairs, repair parts, fuels, lubricants, cellular phones, transportation, and housing, if required, necessary to accomplish the project. The quantities and distributions are estimated for the purpose of making an award. Locations of sites, debris quantities, destinations, material densities, etc. may differ substantially in an actual disaster.

Assumptions: 3,000,000 cubic yards of debris consisting of 2,500,000 cubic yards of vegetation debris and 500,000 cubic yards of mixed debris.

PROPOSAL FORM 3 – PRICE PROPOSAL

PART B – HOURLY RATES

TDMS SET-UP AND CLOSURE AND DEBRIS CLEARANCE FOR ACCESS - OPTIONAL USE BY COUNTY AND OTHER GOVERNMENTAL ENTITIES			
EQUIPMENT AND LABOR RATES			
EQUIPMENT TYPE	HOURLY EQUIPMENT RATE	HOURLY LABOR RATE	TOTAL HOURLY RATE
Bobcat Loader	$70.00	$55.00	$125.00
Crew Foreman w/ Cell Phone and Pickup	$35.00	$80.00	$115.00
Dozer, Tracked, D5 or similar	$110.00	$55.00	$165.00
Dozer, Tracked, D6 or similar	$120.00	$55.00	$175.00
Dozer, Tracked, D7 or similar	$145.00	$55.00	$200.00
Dozer, Tracked, D8 or similar	$225.00	$55.00	$280.00
Dump Truck, 18 CY-20 CY	$85.00	$60.00	$145.00
Dump Truck, 21CY-30 CY	$95.00	$60.00	$155.00
Generator and Lighting	$45.00	$0.00	$45.00
Grader w/ 12' Blade	$125.00	$55.00	$180.00
Hydraulic Excavator, 1.5 CY	$115.00	$55.00	$170.00
Hydraulic Excavator, 2.5 CY	$135.00	$55.00	$190.00
Knuckleboom Loader	$225.00	$70.00	$295.00
Laborer w/ Chain Saw	$25.00	$45.00	$70.00
Laborer w/ small tools, traffic control, flag person	$10.00	$45.00	$55.00
Lowboy Trailer w/ Tractor	$100.00	$55.00	$155.00
Operations Manager w/ Cell Phone and Pickup	$35.00	$95.00	$120.00
Pickup Truck, .5 Ton	$35.00	$45.00	$80.00
Soil Compactor 81 HP+	$80.00	$55.00	$135.00
Soil Compactor to 80 HP	$70.00	$55.00	$125.00
Soil Compactor, Towed Unit	$75.00	$55.00	$130.00
Truck, Flatbed	$35.00	$45.00	$80.00
Tub Grinder, 800 to 1,000 HP	$550.00	$55.00	$605.00
Water Truck	$85.00	$45.00	$130.00
Wheel Loader, 2.5 CY, 950 or similar	$125.00	$55.00	$180.00
Wheel Loader, 3.5-4.0 CY, 966 or similar	$145.00	$55.00	$200.00
Wheel Loader, 4.5 CY, 980 or similar	$195.00	$55.00	$250.00
Wheel Loader-Backhoe, 1.0-1.5 CY	$85.00	$55.00	$140.00
Other – Please List			

Attach additional sheet with equipment type and labor rates, if needed

PROPOSAL FORM 3 – PRICE PROPOSAL

PART C – UNIT COST SCHEDULE

ITEM	HAZARDOUS STUMP REMOVAL, HAULING, AND DISPOSAL	UNIT	UNIT COST
1.	24-inch diameter to 48.99-inch diameter	Stump	$475.00
2.	49-inch diameter and greater	Stump	$825.00
3.	Stump Fill Dirt – Fill dirt for stump holes after removal	CY	$25.00
	HAZARDOUS HANGING LIMBS (HANGERS) To include removal of all hanging limbs. Limbs to be cut and placed on the right of way for collection as vegetative debris.		
4.	2-inch diameter and greater	Tree	$95.00
	HAZARDOUS TREE REMOVAL Trees to be flush cut at ground level and placed on the right of way for removal as vegetative debris.		
5.	6-inch diameter to 11.99-inch diameter	Tree	$105.00
6.	12-inch diameter to 23.99-inch diameter	Tree	$250.00
7.	24-inch diameter to 35.99-inch diameter	Tree	$350.00
8.	36-inch diameter to 47.99-inch diameter	Tree	$450.00
8.	48-inch diameter and greater	Tree	$695.00

NOTE:
The following is information only and will NOT be considered in the evaluation of this RFP

The AUTHORITY reserves the right to use this contract to handle small quantities of debris removal and as support for our Franchise Contracts as needed. Below is a daily rate to remove debris. The AUTHORITY will pay for the disposal cost. There is no requirement to provide a rate, however if you do, we expect your company to honor this special service and respond within 48 hours at the rate below.

COLLECTION SERVICE ONLY	
EQUIPMENT	DAILY RATE (10 HRS/DAY)
Knuckleboom Loader and Operator	$ 295.00

ATTACHMENT "A"

SOLID WASTE AUTHORITY
OF PALM BEACH COUNTY

7501 North Jog Road
West Palm Beach, Florida 33412
Telephone: 561-640-4000 • Fax: 561-640-3400

TASK ORDER
DISASTER DEBRIS MANAGEMENT

TO_____
Task Order No.

In accordance with _____(Contractor) contract, with the Solid Waste Authority of PBC, Florida, (AUTHORITY) Agreement No._____ for Hurricane/Disaster Debris Removal, Reduction, and Disposal dated _____ the AUTHORITY hereby requests and authorizes the services to be performed on the project as described below:

Project: _____

Specific Work to be performed: _____

_____

_____

_____

_____

_____

Duration of Work (Include Start Date, End Date and Total Calendar Days): _____

_____

_____

_____

Method of Payment: _____

_____

_____

Estimated Cost of this Task Order: $_____

Contractor Signature: _____ Date: _____

AUTHORITY Signature: _____ Date: _____

SWA Use Only

SWA Requestor/Monitor: _____ Date: _____

SWA Dept. Director: _____ Date: _____

Vendor No.: _____ Account No.: _____ Project: _____

Purchasing: _____ Budget: _____ Accounting: _____

ATTACHMENT "B"

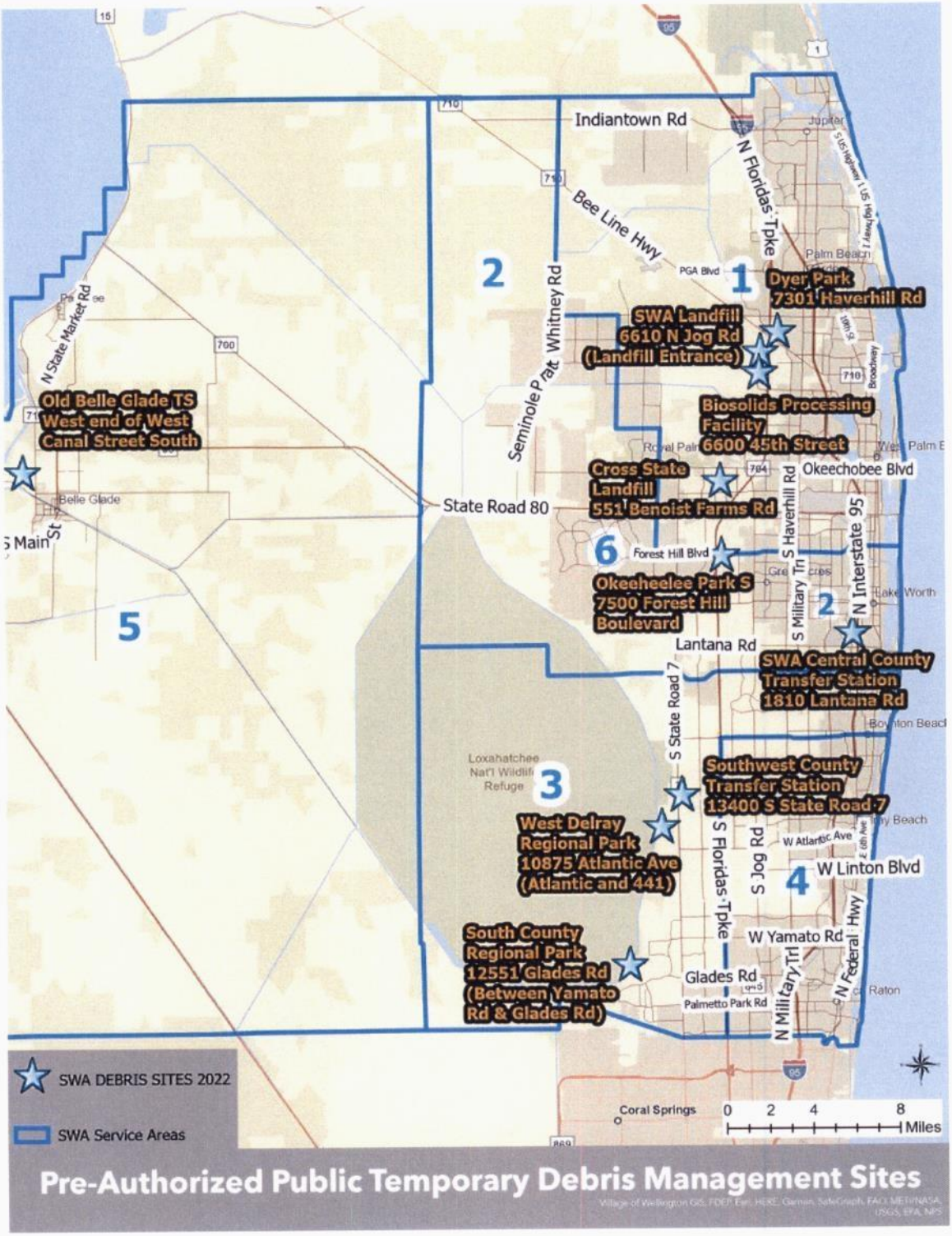

ATTACHMENT "C"

PUBLIC ASSISTANCE PROGRAM AND POLICY GUIDE

The Public Assistance Program and Policy Guide, Version 4, Effective June 1, 2020 (see hyperlink below) is the most recent reference material that will provide additional information:
https://www.fema.gov/sites/default/files/documents/fema_pappg-v4-updated-links_policy_6-1-2020.pdf

PROJECT MANAGEMENT

Project management begins when a disaster occurs and does not end until an applicant has received final payment for the project. Good project management ensures successful recovery from the disaster, expedited payment of funds, and more efficient close-outs of PA Program grants.

Record Keeping

It is critical that the applicant establish and maintain accurate records of events and expenditures related to disaster recovery work. The information required for documentation describes the "who, what, when, where, why, and how much" for each item of disaster recovery work. The applicant should have a financial and record keeping system in place that can be used to track these elements. The importance of maintaining a complete and accurate set of records for each project cannot be over-emphasized. Good documentation facilitates the project formulation, validation, approval, and funding processes.

All of the documentation pertaining to a project should be filed with the corresponding *PW* and maintained by the applicant as the permanent record of the project. These records become the basis for verification of the accuracy of project cost estimates during validation of small projects, reconciliation of costs for large projects, and audits.

Applicants should begin the record keeping process before a disaster is declared by the President. To ensure that work performed both before and after a disaster declaration is well documented, potential applicants should:

- designate a person to coordinate the compilation and filing of records;
- establish a file for each site where work has been or will be performed; and
- maintain accurate disbursement and accounting records to document the work performed and the costs incurred.

The Federal Office of Management and Budget requires grant recipients to maintain financial and program records on file for three years following final payment. Records of grant recipients may be subject to the provisions of the Single Audit Act, as described on page 117 of this guide. Applicants may refer to the Applicant Handbook, FEMA 323, for additional information regarding record-keeping.

ATTACHMENT "D"

MOBILIZATION SCHEDULE

CONTRACTOR shall commence mobilization of equipment, operators, and laborers immediately upon receipt of a Mobilization Task Order to meet the progress pattern set below.

	Category 1 & 2	Category 3	Category 4	Category 5
Within 24 hours	25%	25%	20%	15%
Within 48 hours	30%	30%	30%	25%
Within 72 hours	40%	40%	40%	40%
Within 96 hours	60%	60%	50%	50%
Within 5 days	100%	80%	60%	60%
Within 10 days		100%	80%	70%
Within 14 days			100%	80%
Within 20 days				100%

ATTACHMENT "E"

FHWA-1273

FHWA-1273 – Revised May 1, 2012

REQUIRED CONTRACT PROVISIONS
FEDERAL-AID CONSTRUCTION CONTRACTS

I. General
II. Nondiscrimination
III. Nonsegregated Facilities
IV. Davis-Bacon and Related Act Provisions
V. Contract Work Hours and Safety Standards Act Provisions
VI. Subletting or Assigning the Contract
VII. Safety: Accident Prevention
VIII. False Statements Concerning Highway Projects
IX. Implementation of Clean Air Act and Federal Water Pollution Control Act
X. Compliance with Governmentwide Suspension and Debarment Requirements
XI. Certification Regarding Use of Contract Funds for Lobbying

ATTACHMENTS

A. Employment and Materials Preference for Appalachian Development Highway System or Appalachian Local Access Road Contracts (Included in Appalachian contracts only)

I. GENERAL

1. Form FHWA-1273 must be physically incorporated in each construction contract funded under Title 23 (excluding emergency contracts solely intended for debris removal). The contractor (or subcontractor) must insert this form in each subcontract and further require its inclusion in all lower tier subcontracts (excluding purchase orders, rental agreements and other agreements for supplies or services).

The applicable requirements of Form FHWA-1273 are incorporated by reference for work done under any purchase order, rental agreement or agreement for other services. The prime contractor shall be responsible for compliance by any subcontractor, lower-tier subcontractor or service provider.

Form FHWA-1273 must be included in all Federal-aid design-build contracts, in all subcontracts and in lower tier subcontracts (excluding subcontracts for design services, purchase orders, rental agreements and other agreements for supplies or services). The design-builder shall be responsible for compliance by any subcontractor, lower-tier subcontractor or service provider.

Contracting agencies may reference Form FHWA-1273 in bid proposal or request for proposal documents, however, the Form FHWA-1273 must be physically incorporated (not referenced) in all contracts, subcontracts and lower-tier subcontracts (excluding purchase orders, rental agreements and other agreements for supplies or services related to a construction contract).

2. Subject to the applicability criteria noted in the following sections, these contract provisions shall apply to all work performed on the contract by the contractor's own organization and with the assistance of workers under the contractor's immediate superintendence and to all work performed on the contract by piecework, station work, or by subcontract.

3. A breach of any of the stipulations contained in these Required Contract Provisions may be sufficient grounds for withholding of progress payments, withholding of final payment, termination of the contract, suspension / debarment or any other action determined to be appropriate by the contracting agency and FHWA.

4. Selection of Labor: During the performance of this contract, the contractor shall not use convict labor for any purpose within the limits of a construction project on a Federal-aid highway unless it is labor performed by convicts who are on parole, supervised release, or probation. The term Federal-aid highway does not include roadways functionally classified as local roads or rural minor collectors.

II. NONDISCRIMINATION

The provisions of this section related to 23 CFR Part 230 are applicable to all Federal-aid construction contracts and to all related construction subcontracts of $10,000 or more. The provisions of 23 CFR Part 230 are not applicable to material supply, engineering, or architectural service contracts.

In addition, the contractor and all subcontractors must comply with the following policies: Executive Order 11246, 41 CFR 60, 29 CFR 1625-1627, Title 23 USC Section 140, the Rehabilitation Act of 1973, as amended (29 USC 794), Title VI of the Civil Rights Act of 1964, as amended, and related regulations including 49 CFR Parts 21, 26 and 27; and 23 CFR Parts 200, 230, and 633.

The contractor and all subcontractors must comply with: the requirements of the Equal Opportunity Clause in 41 CFR 60-1.4(b) and, for all construction contracts exceeding $10,000, the Standard Federal Equal Employment Opportunity Construction Contract Specifications in 41 CFR 60-4.3.

Note: The U.S. Department of Labor has exclusive authority to determine compliance with Executive Order 11246 and the policies of the Secretary of Labor including 41 CFR 60, and 29 CFR 1625-1627. The contracting agency and the FHWA have the authority and the responsibility to ensure compliance with Title 23 USC Section 140, the Rehabilitation Act of 1973, as amended (29 USC 794), and Title VI of the Civil Rights Act of 1964, as amended, and related regulations including 49 CFR Parts 21, 26 and 27; and 23 CFR Parts 200, 230, and 633.

The following provision is adopted from 23 CFR 230, Appendix A, with appropriate revisions to conform to the U.S. Department of Labor (US DOL) and FHWA requirements.

1. Equal Employment Opportunity: Equal employment opportunity (EEO) requirements not to discriminate and to take affirmative action to assure equal opportunity as set forth under laws, executive orders, rules, regulations (28 CFR 35, 29 CFR 1630, 29 CFR 1625-1627, 41 CFR 60 and 49 CFR 27) and orders of the Secretary of Labor as modified by the provisions prescribed herein, and imposed pursuant to 23 U.S.C. 140 shall constitute the EEO and specific affirmative action standards for the contractor's project activities under

this contract. The provisions of the Americans with Disabilities Act of 1990 (42 U.S.C. 12101 et seq.) set forth under 28 CFR 35 and 29 CFR 1630 are incorporated by reference in this contract. In the execution of this contract, the contractor agrees to comply with the following minimum specific requirement activities of EEO:

a. The contractor will work with the contracting agency and the Federal Government to ensure that it has made every good faith effort to provide equal opportunity with respect to all of its terms and conditions of employment and in their review of activities under the contract.

b. The contractor will accept as its operating policy the following statement:

"It is the policy of this Company to assure that applicants are employed, and that employees are treated during employment, without regard to their race, religion, sex, color, national origin, age or disability. Such action shall include: employment, upgrading, demotion, or transfer; recruitment or recruitment advertising; layoff or termination; rates of pay or other forms of compensation; and selection for training, including apprenticeship, pre-apprenticeship, and/or on-the-job training."

2. EEO Officer: The contractor will designate and make known to the contracting officers an EEO Officer who will have the responsibility for and must be capable of effectively administering and promoting an active EEO program and who must be assigned adequate authority and responsibility to do so.

3. Dissemination of Policy: All members of the contractor's staff who are authorized to hire, supervise, promote, and discharge employees, or who recommend such action, or who are substantially involved in such action, will be made fully cognizant of, and will implement, the contractor's EEO policy and contractual responsibilities to provide EEO in each grade and classification of employment. To ensure that the above agreement will be met, the following actions will be taken as a minimum:

a. Periodic meetings of supervisory and personnel office employees will be conducted before the start of work and then not less often than once every six months, at which time the contractor's EEO policy and its implementation will be reviewed and explained. The meetings will be conducted by the EEO Officer.

b. All new supervisory or personnel office employees will be given a thorough indoctrination by the EEO Officer, covering all major aspects of the contractor's EEO obligations within thirty days following their reporting for duty with the contractor.

c. All personnel who are engaged in direct recruitment for the project will be instructed by the EEO Officer in the contractor's procedures for locating and hiring minorities and women.

d. Notices and posters setting forth the contractor's EEO policy will be placed in areas readily accessible to employees, applicants for employment and potential employees.

e. The contractor's EEO policy and the procedures to implement such policy will be brought to the attention of employees by means of meetings, employee handbooks, or other appropriate means.

4. Recruitment: When advertising for employees, the contractor will include in all advertisements for employees the notation: "An Equal Opportunity Employer." All such advertisements will be placed in publications having a large circulation among minorities and women in the area from which the project work force would normally be derived.

a. The contractor will, unless precluded by a valid bargaining agreement, conduct systematic and direct recruitment through public and private employee referral sources likely to yield qualified minorities and women. To meet this requirement, the contractor will identify sources of potential minority group employees, and establish with such identified sources procedures whereby minority and women applicants may be referred to the contractor for employment consideration.

b. In the event the contractor has a valid bargaining agreement providing for exclusive hiring hall referrals, the contractor is expected to observe the provisions of that agreement to the extent that the system meets the contractor's compliance with EEO contract provisions. Where implementation of such an agreement has the effect of discriminating against minorities or women, or obligates the contractor to do the same, such implementation violates Federal nondiscrimination provisions.

c. The contractor will encourage its present employees to refer minorities and women as applicants for employment. Information and procedures with regard to referring such applicants will be discussed with employees.

5. Personnel Actions: Wages, working conditions, and employee benefits shall be established and administered, and personnel actions of every type, including hiring, upgrading, promotion, transfer, demotion, layoff, and termination, shall be taken without regard to race, color, religion, sex, national origin, age or disability. The following procedures shall be followed:

a. The contractor will conduct periodic inspections of project sites to insure that working conditions and employee facilities do not indicate discriminatory treatment of project site personnel.

b. The contractor will periodically evaluate the spread of wages paid within each classification to determine any evidence of discriminatory wage practices.

c. The contractor will periodically review selected personnel actions in depth to determine whether there is evidence of discrimination. Where evidence is found, the contractor will promptly take corrective action. If the review indicates that the discrimination may extend beyond the actions reviewed, such corrective action shall include all affected persons.

d. The contractor will promptly investigate all complaints of alleged discrimination made to the contractor in connection with its obligations under this contract, will attempt to resolve such complaints, and will take appropriate corrective action within a reasonable time. If the investigation indicates that the discrimination may affect persons other than the complainant, such corrective action shall include such other persons. Upon completion of each investigation, the contractor will inform every complainant of all of their avenues of appeal.

6. Training and Promotion:

a. The contractor will assist in locating, qualifying, and increasing the skills of minorities and women who are

applicants for employment or current employees. Such efforts should be aimed at developing full journey level status employees in the type of trade or job classification involved.

b. Consistent with the contractor's work force requirements and as permissible under Federal and State regulations, the contractor shall make full use of training programs, i.e., apprenticeship, and on-the-job training programs for the geographical area of contract performance. In the event a special provision for training is provided under this contract, this subparagraph will be superseded as indicated in the special provision. The contracting agency may reserve training positions for persons who receive welfare assistance in accordance with 23 U.S.C. 140(a).

c. The contractor will advise employees and applicants for employment of available training programs and entrance requirements for each.

d. The contractor will periodically review the training and promotion potential of employees who are minorities and women and will encourage eligible employees to apply for such training and promotion.

7. Unions: If the contractor relies in whole or in part upon unions as a source of employees, the contractor will use good faith efforts to obtain the cooperation of such unions to increase opportunities for minorities and women. Actions by the contractor, either directly or through a contractor's association acting as agent, will include the procedures set forth below:

a. The contractor will use good faith efforts to develop, in cooperation with the unions, joint training programs aimed toward qualifying more minorities and women for membership in the unions and increasing the skills of minorities and women so that they may qualify for higher paying employment.

b. The contractor will use good faith efforts to incorporate an EEO clause into each union agreement to the end that such union will be contractually bound to refer applicants without regard to their race, color, religion, sex, national origin, age or disability.

c. The contractor is to obtain information as to the referral practices and policies of the labor union except that to the extent such information is within the exclusive possession of the labor union and such labor union refuses to furnish such information to the contractor, the contractor shall so certify to the contracting agency and shall set forth what efforts have been made to obtain such information.

d. In the event the union is unable to provide the contractor with a reasonable flow of referrals within the time limit set forth in the collective bargaining agreement, the contractor will, through independent recruitment efforts, fill the employment vacancies without regard to race, color, religion, sex, national origin, age or disability; making full efforts to obtain qualified and/or qualifiable minorities and women. The failure of a union to provide sufficient referrals (even though it is obligated to provide exclusive referrals under the terms of a collective bargaining agreement) does not relieve the contractor from the requirements of this paragraph. In the event the union referral practice prevents the contractor from meeting the obligations pursuant to Executive Order 11246, as amended, and these special provisions, such contractor shall immediately notify the contracting agency.

8. Reasonable Accommodation for Applicants / Employees with Disabilities: The contractor must be familiar with the requirements for and comply with the Americans with Disabilities Act and all rules and regulations established there under. Employers must provide reasonable accommodation in all employment activities unless to do so would cause an undue hardship.

9. Selection of Subcontractors, Procurement of Materials and Leasing of Equipment: The contractor shall not discriminate on the grounds of race, color, religion, sex, national origin, age or disability in the selection and retention of subcontractors, including procurement of materials and leases of equipment. The contractor shall take all necessary and reasonable steps to ensure nondiscrimination in the administration of this contract.

a. The contractor shall notify all potential subcontractors and suppliers and lessors of their EEO obligations under this contract.

b. The contractor will use good faith efforts to ensure subcontractor compliance with their EEO obligations.

10. Assurance Required by 49 CFR 26.13(b):

a. The requirements of 49 CFR Part 26 and the State DOT's U.S. DOT-approved DBE program are incorporated by reference.

b. The contractor or subcontractor shall not discriminate on the basis of race, color, national origin, or sex in the performance of this contract. The contractor shall carry out applicable requirements of 49 CFR Part 26 in the award and administration of DOT-assisted contracts. Failure by the contractor to carry out these requirements is a material breach of this contract, which may result in the termination of this contract or such other remedy as the contracting agency deems appropriate.

11. Records and Reports: The contractor shall keep such records as necessary to document compliance with the EEO requirements. Such records shall be retained for a period of three years following the date of the final payment to the contractor for all contract work and shall be available at reasonable times and places for inspection by authorized representatives of the contracting agency and the FHWA.

a. The records kept by the contractor shall document the following:

(1) The number and work hours of minority and non-minority group members and women employed in each work classification on the project;

(2) The progress and efforts being made in cooperation with unions, when applicable, to increase employment opportunities for minorities and women; and

(3) The progress and efforts being made in locating, hiring, training, qualifying, and upgrading minorities and women;

b. The contractors and subcontractors will submit an annual report to the contracting agency each July for the duration of the project, indicating the number of minority, women, and non-minority group employees currently engaged in each work classification required by the contract work. This information is to be reported on Form FHWA-1391. The staffing data should represent the project work force on board in all or any part of the last payroll period preceding the end of July. If on-the-job training is being required by special provision, the contractor

will be required to collect and report training data. The employment data should reflect the work force on board during all or any part of the last payroll period preceding the end of July.

III. NONSEGREGATED FACILITIES

This provision is applicable to all Federal-aid construction contracts and to all related construction subcontracts of $10,000 or more.

The contractor must ensure that facilities provided for employees are provided in such a manner that segregation on the basis of race, color, religion, sex, or national origin cannot result. The contractor may neither require such segregated use by written or oral policies nor tolerate such use by employee custom. The contractor's obligation extends further to ensure that its employees are not assigned to perform their services at any location, under the contractor's control, where the facilities are segregated. The term "facilities" includes waiting rooms, work areas, restaurants and other eating areas, time clocks, restrooms, washrooms, locker rooms, and other storage or dressing areas, parking lots, drinking fountains, recreation or entertainment areas, transportation, and housing provided for employees. The contractor shall provide separate or single-user restrooms and necessary dressing or sleeping areas to assure privacy between sexes.

IV. DAVIS-BACON AND RELATED ACT PROVISIONS

This section is applicable to all Federal-aid construction projects exceeding $2,000 and to all related subcontracts and lower-tier subcontracts (regardless of subcontract size). The requirements apply to all projects located within the right-of-way of a roadway that is functionally classified as Federal-aid highway. This excludes roadways functionally classified as local roads or rural minor collectors, which are exempt. Contracting agencies may elect to apply these requirements to other projects.

The following provisions are from the U.S. Department of Labor regulations in 29 CFR 5.5 "Contract provisions and related matters" with minor revisions to conform to the FHWA-1273 format and FHWA program requirements.

1. Minimum wages

a. All laborers and mechanics employed or working upon the site of the work, will be paid unconditionally and not less often than once a week, and without subsequent deduction or rebate on any account (except such payroll deductions as are permitted by regulations issued by the Secretary of Labor under the Copeland Act (29 CFR part 3)), the full amount of wages and bona fide fringe benefits (or cash equivalents thereof) due at time of payment computed at rates not less than those contained in the wage determination of the Secretary of Labor which is attached hereto and made a part hereof, regardless of any contractual relationship which may be alleged to exist between the contractor and such laborers and mechanics.

Contributions made or costs reasonably anticipated for bona fide fringe benefits under section 1(b)(2) of the Davis-Bacon Act on behalf of laborers or mechanics are considered wages paid to such laborers or mechanics, subject to the provisions of paragraph 1.d. of this section; also, regular contributions made or costs incurred for more than a weekly period (but not less often than quarterly) under plans, funds, or programs which cover the particular weekly period, are deemed to be constructively made or incurred during such weekly period. Such laborers and mechanics shall be paid the appropriate wage rate and fringe benefits on the wage determination for the classification of work actually performed, without regard to skill, except as provided in 29 CFR 5.5(a)(4). Laborers or mechanics performing work in more than one classification may be compensated at the rate specified for each classification for the time actually worked therein: Provided, That the employer's payroll records accurately set forth the time spent in each classification in which work is performed. The wage determination (including any additional classification and wage rates conformed under paragraph 1.b. of this section) and the Davis-Bacon poster (WH–1321) shall be posted at all times by the contractor and its subcontractors at the site of the work in a prominent and accessible place where it can be easily seen by the workers.

b.(1) The contracting officer shall require that any class of laborers or mechanics, including helpers, which is not listed in the wage determination and which is to be employed under the contract shall be classified in conformance with the wage determination. The contracting officer shall approve an additional classification and wage rate and fringe benefits therefore only when the following criteria have been met:

(i) The work to be performed by the classification requested is not performed by a classification in the wage determination; and

(ii) The classification is utilized in the area by the construction industry; and

(iii) The proposed wage rate, including any bona fide fringe benefits, bears a reasonable relationship to the wage rates contained in the wage determination.

(2) If the contractor and the laborers and mechanics to be employed in the classification (if known), or their representatives, and the contracting officer agree on the classification and wage rate (including the amount designated for fringe benefits where appropriate), a report of the action taken shall be sent by the contracting officer to the Administrator of the Wage and Hour Division, Employment Standards Administration, U.S. Department of Labor, Washington, DC 20210. The Administrator, or an authorized representative, will approve, modify, or disapprove every additional classification action within 30 days of receipt and so advise the contracting officer or will notify the contracting officer within the 30-day period that additional time is necessary.

(3) In the event the contractor, the laborers or mechanics to be employed in the classification or their representatives, and the contracting officer do not agree on the proposed classification and wage rate (including the amount designated for fringe benefits, where appropriate), the contracting officer shall refer the questions, including the views of all interested parties and the recommendation of the contracting officer, to the Wage and Hour Administrator for determination. The Wage and Hour Administrator, or an authorized representative, will issue a determination within 30 days of receipt and so advise the contracting officer or

will notify the contracting officer within the 30-day period that additional time is necessary.

(4) The wage rate (including fringe benefits where appropriate) determined pursuant to paragraphs 1.b.(2) or 1.b.(3) of this section, shall be paid to all workers performing work in the classification under this contract from the first day on which work is performed in the classification.

c. Whenever the minimum wage rate prescribed in the contract for a class of laborers or mechanics includes a fringe benefit which is not expressed as an hourly rate, the contractor shall either pay the benefit as stated in the wage determination or shall pay another bona fide fringe benefit or an hourly cash equivalent thereof.

d. If the contractor does not make payments to a trustee or other third person, the contractor may consider as part of the wages of any laborer or mechanic the amount of any costs reasonably anticipated in providing bona fide fringe benefits under a plan or program, Provided, That the Secretary of Labor has found, upon the written request of the contractor, that the applicable standards of the Davis-Bacon Act have been met. The Secretary of Labor may require the contractor to set aside in a separate account assets for the meeting of obligations under the plan or program.

2. Withholding

The contracting agency shall upon its own action or upon written request of an authorized representative of the Department of Labor, withhold or cause to be withheld from the contractor under this contract, or any other Federal contract with the same prime contractor, or any other federally-assisted contract subject to Davis-Bacon prevailing wage requirements, which is held by the same prime contractor, so much of the accrued payments or advances as may be considered necessary to pay laborers and mechanics, including apprentices, trainees, and helpers, employed by the contractor or any subcontractor the full amount of wages required by the contract. In the event of failure to pay any laborer or mechanic, including any apprentice, trainee, or helper, employed or working on the site of the work, all or part of the wages required by the contract, the contracting agency may, after written notice to the contractor, take such action as may be necessary to cause the suspension of any further payment, advance, or guarantee of funds until such violations have ceased.

3. Payrolls and basic records

a. Payrolls and basic records relating thereto shall be maintained by the contractor during the course of the work and preserved for a period of three years thereafter for all laborers and mechanics working at the site of the work. Such records shall contain the name, address, and social security number of each such worker, his or her correct classification, hourly rates of wages paid (including rates of contributions or costs anticipated for bona fide fringe benefits or cash equivalents thereof of the types described in section 1(b)(2)(B) of the Davis-Bacon Act), daily and weekly number of hours worked, deductions made and actual wages paid. Whenever the Secretary of Labor has found under 29 CFR 5.5(a)(1)(iv) that the wages of any laborer or mechanic include the amount of any costs reasonably anticipated in providing benefits under a plan or program described in section 1(b)(2)(B) of the Davis-Bacon Act, the contractor shall maintain records which show that the commitment to provide such benefits is enforceable, that the plan or program is financially responsible, and that the plan or program has been communicated in writing to the laborers or mechanics affected, and records which show the costs anticipated or the actual cost incurred in providing such benefits. Contractors employing apprentices or trainees under approved programs shall maintain written evidence of the registration of apprenticeship programs and certification of trainee programs, the registration of the apprentices and trainees, and the ratios and wage rates prescribed in the applicable programs.

b.(1) The contractor shall submit weekly for each week in which any contract work is performed a copy of all payrolls to the contracting agency. The payrolls submitted shall set out accurately and completely all of the information required to be maintained under 29 CFR 5.5(a)(3)(i), except that full social security numbers and home addresses shall not be included on weekly transmittals. Instead the payrolls shall only need to include an individually identifying number for each employee (e.g. , the last four digits of the employee's social security number). The required weekly payroll information may be submitted in any form desired. Optional Form WH–347 is available for this purpose from the Wage and Hour Division Web site at http://www.dol.gov/esa/whd/forms/wh347instr.htm or its successor site. The prime contractor is responsible for the submission of copies of payrolls by all subcontractors. Contractors and subcontractors shall maintain the full social security number and current address of each covered worker, and shall provide them upon request to the contracting agency for transmission to the State DOT, the FHWA or the Wage and Hour Division of the Department of Labor for purposes of an investigation or audit of compliance with prevailing wage requirements. It is not a violation of this section for a prime contractor to require a subcontractor to provide addresses and social security numbers to the prime contractor for its own records, without weekly submission to the contracting agency..

(2) Each payroll submitted shall be accompanied by a "Statement of Compliance," signed by the contractor or subcontractor or his or her agent who pays or supervises the payment of the persons employed under the contract and shall certify the following:

(i) That the payroll for the payroll period contains the information required to be provided under §5.5 (a)(3)(ii) of Regulations, 29 CFR part 5, the appropriate information is being maintained under §5.5 (a)(3)(i) of Regulations, 29 CFR part 5, and that such information is correct and complete;

(ii) That each laborer or mechanic (including each helper, apprentice, and trainee) employed on the contract during the payroll period has been paid the full weekly wages earned, without rebate, either directly or indirectly, and that no deductions have been made either directly or indirectly from the full wages earned, other than permissible deductions as set forth in Regulations, 29 CFR part 3;

(iii) That each laborer or mechanic has been paid not less than the applicable wage rates and fringe benefits or cash equivalents for the classification of work performed, as specified in the applicable wage determination incorporated into the contract.

(3) The weekly submission of a properly executed certification set forth on the reverse side of Optional Form WH–347 shall satisfy the requirement for submission of the "Statement of Compliance" required by paragraph 3.b.(2) of this section.

(4) The falsification of any of the above certifications may subject the contractor or subcontractor to civil or criminal prosecution under section 1001 of title 18 and section 231 of title 31 of the United States Code.

c. The contractor or subcontractor shall make the records required under paragraph 3.a. of this section available for inspection, copying, or transcription by authorized representatives of the contracting agency, the State DOT, the FHWA, or the Department of Labor, and shall permit such representatives to interview employees during working hours on the job. If the contractor or subcontractor fails to submit the required records or to make them available, the FHWA may, after written notice to the contractor, the contracting agency or the State DOT, take such action as may be necessary to cause the suspension of any further payment, advance, or guarantee of funds. Furthermore, failure to submit the required records upon request or to make such records available may be grounds for debarment action pursuant to 29 CFR 5.12.

4. Apprentices and trainees

a. Apprentices (programs of the USDOL).

Apprentices will be permitted to work at less than the predetermined rate for the work they performed when they are employed pursuant to and individually registered in a bona fide apprenticeship program registered with the U.S. Department of Labor, Employment and Training Administration, Office of Apprenticeship Training, Employer and Labor Services, or with a State Apprenticeship Agency recognized by the Office, or if a person is employed in his or her first 90 days of probationary employment as an apprentice in such an apprenticeship program, who is not individually registered in the program, but who has been certified by the Office of Apprenticeship Training, Employer and Labor Services or a State Apprenticeship Agency (where appropriate) to be eligible for probationary employment as an apprentice.

The allowable ratio of apprentices to journeymen on the job site in any craft classification shall not be greater than the ratio permitted to the contractor as to the entire work force under the registered program. Any worker listed on a payroll at an apprentice wage rate, who is not registered or otherwise employed as stated above, shall be paid not less than the applicable wage rate on the wage determination for the classification of work actually performed. In addition, any apprentice performing work on the job site in excess of the ratio permitted under the registered program shall be paid not less than the applicable wage rate on the wage determination for the work actually performed. Where a contractor is performing construction on a project in a locality other than that in which its program is registered, the ratios and wage rates (expressed in percentages of the journeyman's hourly rate) specified in the contractor's or subcontractor's registered program shall be observed.

Every apprentice must be paid at not less than the rate specified in the registered program for the apprentice's level of progress, expressed as a percentage of the journeymen hourly rate specified in the applicable wage determination. Apprentices shall be paid fringe benefits in accordance with the provisions of the apprenticeship program. If the apprenticeship program does not specify fringe benefits, apprentices must be paid the full amount of fringe benefits listed on the wage determination for the applicable classification. If the Administrator determines that a different practice prevails for the applicable apprentice classification, fringes shall be paid in accordance with that determination.

In the event the Office of Apprenticeship Training, Employer and Labor Services, or a State Apprenticeship Agency recognized by the Office, withdraws approval of an apprenticeship program, the contractor will no longer be permitted to utilize apprentices at less than the applicable predetermined rate for the work performed until an acceptable program is approved.

b. Trainees (programs of the USDOL).

Except as provided in 29 CFR 5.16, trainees will not be permitted to work at less than the predetermined rate for the work performed unless they are employed pursuant to and individually registered in a program which has received prior approval, evidenced by formal certification by the U.S. Department of Labor, Employment and Training Administration.

The ratio of trainees to journeymen on the job site shall not be greater than permitted under the plan approved by the Employment and Training Administration.

Every trainee must be paid at not less than the rate specified in the approved program for the trainee's level of progress, expressed as a percentage of the journeyman hourly rate specified in the applicable wage determination. Trainees shall be paid fringe benefits in accordance with the provisions of the trainee program. If the trainee program does not mention fringe benefits, trainees shall be paid the full amount of fringe benefits listed on the wage determination unless the Administrator of the Wage and Hour Division determines that there is an apprenticeship program associated with the corresponding journeyman wage rate on the wage determination which provides for less than full fringe benefits for apprentices. Any employee listed on the payroll at a trainee rate who is not registered and participating in a training plan approved by the Employment and Training Administration shall be paid not less than the applicable wage rate on the wage determination for the classification of work actually performed. In addition, any trainee performing work on the job site in excess of the ratio permitted under the registered program shall be paid not less than the applicable wage rate on the wage determination for the work actually performed.

In the event the Employment and Training Administration withdraws approval of a training program, the contractor will no longer be permitted to utilize trainees at less than the applicable predetermined rate for the work performed until an acceptable program is approved.

c. Equal employment opportunity. The utilization of apprentices, trainees and journeymen under this part shall be in conformity with the equal employment opportunity requirements of Executive Order 11246, as amended, and 29 CFR part 30.

d. Apprentices and Trainees (programs of the U.S. DOT).

Apprentices and trainees working under apprenticeship and skill training programs which have been certified by the Secretary of Transportation as promoting EEO in connection with Federal-aid highway construction programs are not subject to the requirements of paragraph 4 of this Section IV. The straight time hourly wage rates for apprentices and trainees under such programs will be established by the particular programs. The ratio of apprentices and trainees to journeymen shall not be greater than permitted by the terms of the particular program.

5. Compliance with Copeland Act requirements. The contractor shall comply with the requirements of 29 CFR part 3, which are incorporated by reference in this contract.

6. Subcontracts. The contractor or subcontractor shall insert Form FHWA-1273 in any subcontracts and also require the subcontractors to include Form FHWA-1273 in any lower tier subcontracts. The prime contractor shall be responsible for the compliance by any subcontractor or lower tier subcontractor with all the contract clauses in 29 CFR 5.5.

7. Contract termination: debarment. A breach of the contract clauses in 29 CFR 5.5 may be grounds for termination of the contract, and for debarment as a contractor and a subcontractor as provided in 29 CFR 5.12.

8. Compliance with Davis-Bacon and Related Act requirements. All rulings and interpretations of the Davis-Bacon and Related Acts contained in 29 CFR parts 1, 3, and 5 are herein incorporated by reference in this contract.

9. Disputes concerning labor standards. Disputes arising out of the labor standards provisions of this contract shall not be subject to the general disputes clause of this contract. Such disputes shall be resolved in accordance with the procedures of the Department of Labor set forth in 29 CFR parts 5, 6, and 7. Disputes within the meaning of this clause include disputes between the contractor (or any of its subcontractors) and the contracting agency, the U.S. Department of Labor, or the employees or their representatives.

10. Certification of eligibility.

a. By entering into this contract, the contractor certifies that neither it (nor he or she) nor any person or firm who has an interest in the contractor's firm is a person or firm ineligible to be awarded Government contracts by virtue of section 3(a) of the Davis-Bacon Act or 29 CFR 5.12(a)(1).

b. No part of this contract shall be subcontracted to any person or firm ineligible for award of a Government contract by virtue of section 3(a) of the Davis-Bacon Act or 29 CFR 5.12(a)(1).

c. The penalty for making false statements is prescribed in the U.S. Criminal Code, 18 U.S.C. 1001.

V. CONTRACT WORK HOURS AND SAFETY STANDARDS ACT

The following clauses apply to any Federal-aid construction contract in an amount in excess of $100,000 and subject to the overtime provisions of the Contract Work Hours and Safety Standards Act. These clauses shall be inserted in addition to the clauses required by 29 CFR 5.5(a) or 29 CFR 4.6. As used in this paragraph, the terms laborers and mechanics include watchmen and guards.

1. Overtime requirements. No contractor or subcontractor contracting for any part of the contract work which may require or involve the employment of laborers or mechanics shall require or permit any such laborer or mechanic in any workweek in which he or she is employed on such work to work in excess of forty hours in such workweek unless such laborer or mechanic receives compensation at a rate not less than one and one-half times the basic rate of pay for all hours worked in excess of forty hours in such workweek.

2. Violation; liability for unpaid wages; liquidated damages. In the event of any violation of the clause set forth in paragraph (1.) of this section, the contractor and any subcontractor responsible therefor shall be liable for the unpaid wages. In addition, such contractor and subcontractor shall be liable to the United States (in the case of work done under contract for the District of Columbia or a territory, to such District or to such territory), for liquidated damages. Such liquidated damages shall be computed with respect to each individual laborer or mechanic, including watchmen and guards, employed in violation of the clause set forth in paragraph (1.) of this section, in the sum of $10 for each calendar day on which such individual was required or permitted to work in excess of the standard workweek of forty hours without payment of the overtime wages required by the clause set forth in paragraph (1.) of this section.

3. Withholding for unpaid wages and liquidated damages. The FHWA or the contacting agency shall upon its own action or upon written request of an authorized representative of the Department of Labor withhold or cause to be withheld, from any moneys payable on account of work performed by the contractor or subcontractor under any such contract or any other Federal contract with the same prime contractor, or any other federally-assisted contract subject to the Contract Work Hours and Safety Standards Act, which is held by the same prime contractor, such sums as may be determined to be necessary to satisfy any liabilities of such contractor or subcontractor for unpaid wages and liquidated damages as provided in the clause set forth in paragraph (2.) of this section.

4. Subcontracts. The contractor or subcontractor shall insert in any subcontracts the clauses set forth in paragraph (1.) through (4.) of this section and also a clause requiring the subcontractors to include these clauses in any lower tier subcontracts. The prime contractor shall be responsible for compliance by any subcontractor or lower tier subcontractor with the clauses set forth in paragraphs (1.) through (4.) of this section.

VI. SUBLETTING OR ASSIGNING THE CONTRACT

This provision is applicable to all Federal-aid construction contracts on the National Highway System.

1. The contractor shall perform with its own organization contract work amounting to not less than 30 percent (or a greater percentage if specified elsewhere in the contract) of the total original contract price, excluding any specialty items designated by the contracting agency. Specialty items may be performed by subcontract and the amount of any such specialty items performed may be deducted from the total original contract price before computing the amount of work required to be performed by the contractor's own organization (23 CFR 635.116).

a. The term "perform work with its own organization" refers to workers employed or leased by the prime contractor, and equipment owned or rented by the prime contractor, with or without operators. Such term does not include employees or equipment of a subcontractor or lower tier subcontractor, agents of the prime contractor, or any other assignees. The term may include payments for the costs of hiring leased employees from an employee leasing firm meeting all relevant Federal and State regulatory requirements. Leased employees may only be included in this term if the prime contractor meets all of the following conditions:

(1) the prime contractor maintains control over the supervision of the day-to-day activities of the leased employees;
(2) the prime contractor remains responsible for the quality of the work of the leased employees;
(3) the prime contractor retains all power to accept or exclude individual employees from work on the project; and
(4) the prime contractor remains ultimately responsible for the payment of predetermined minimum wages, the submission of payrolls, statements of compliance and all other Federal regulatory requirements.

b. "Specialty Items" shall be construed to be limited to work that requires highly specialized knowledge, abilities, or equipment not ordinarily available in the type of contracting organizations qualified and expected to bid or propose on the contract as a whole and in general are to be limited to minor components of the overall contract.

2. The contract amount upon which the requirements set forth in paragraph (1) of Section VI is computed includes the cost of material and manufactured products which are to be purchased or produced by the contractor under the contract provisions.

3. The contractor shall furnish (a) a competent superintendent or supervisor who is employed by the firm, has full authority to direct performance of the work in accordance with the contract requirements, and is in charge of all construction operations (regardless of who performs the work) and (b) such other of its own organizational resources (supervision, management, and engineering services) as the contracting officer determines is necessary to assure the performance of the contract.

4. No portion of the contract shall be sublet, assigned or otherwise disposed of except with the written consent of the contracting officer, or authorized representative, and such consent when given shall not be construed to relieve the contractor of any responsibility for the fulfillment of the contract. Written consent will be given only after the contracting agency has assured that each subcontract is evidenced in writing and that it contains all pertinent provisions and requirements of the prime contract.

5. The 30% self-performance requirement of paragraph (1) is not applicable to design-build contracts; however, contracting agencies may establish their own self-performance requirements.

VII. SAFETY: ACCIDENT PREVENTION

This provision is applicable to all Federal-aid construction contracts and to all related subcontracts.

1. In the performance of this contract the contractor shall comply with all applicable Federal, State, and local laws governing safety, health, and sanitation (23 CFR 635). The contractor shall provide all safeguards, safety devices and protective equipment and take any other needed actions as it determines, or as the contracting officer may determine, to be reasonably necessary to protect the life and health of employees on the job and the safety of the public and to protect property in connection with the performance of the work covered by the contract.

2. It is a condition of this contract, and shall be made a condition of each subcontract, which the contractor enters into pursuant to this contract, that the contractor and any subcontractor shall not permit any employee, in performance of the contract, to work in surroundings or under conditions which are unsanitary, hazardous or dangerous to his/her health or safety, as determined under construction safety and health standards (29 CFR 1926) promulgated by the Secretary of Labor, in accordance with Section 107 of the Contract Work Hours and Safety Standards Act (40 U.S.C. 3704).

3. Pursuant to 29 CFR 1926.3, it is a condition of this contract that the Secretary of Labor or authorized representative thereof, shall have right of entry to any site of contract performance to inspect or investigate the matter of compliance with the construction safety and health standards and to carry out the duties of the Secretary under Section 107 of the Contract Work Hours and Safety Standards Act (40 U.S.C.3704).

VIII. FALSE STATEMENTS CONCERNING HIGHWAY PROJECTS

This provision is applicable to all Federal-aid construction contracts and to all related subcontracts.

In order to assure high quality and durable construction in conformity with approved plans and specifications and a high degree of reliability on statements and representations made by engineers, contractors, suppliers, and workers on Federal-aid highway projects, it is essential that all persons concerned with the project perform their functions as carefully, thoroughly, and honestly as possible. Willful falsification, distortion, or misrepresentation with respect to any facts related to the project is a violation of Federal law. To prevent any misunderstanding regarding the seriousness of these and similar acts, Form FHWA-1022 shall be posted on each Federal-aid highway project (23 CFR 635) in one or more places where it is readily available to all persons concerned with the project:

18 U.S.C. 1020 reads as follows:

"Whoever, being an officer, agent, or employee of the United States, or of any State or Territory, or whoever, whether a person, association, firm, or corporation, knowingly makes any false statement, false representation, or false report as to the character, quality, quantity, or cost of the material used or to be used, or the quantity or quality of the work performed or to be performed, or the cost thereof in connection with the submission of plans, maps, specifications, contracts, or costs of construction on any highway or related project submitted for approval to the Secretary of Transportation; or

Whoever knowingly makes any false statement, false representation, false report or false claim with respect to the character, quality, quantity, or cost of any work performed or to be performed, or materials furnished or to be furnished, in connection with the construction of any highway or related project approved by the Secretary of Transportation; or

Whoever knowingly makes any false statement or false representation as to material fact in any statement, certificate, or report submitted pursuant to provisions of the Federal-aid Roads Act approved July 1, 1916, (39 Stat. 355), as amended and supplemented;

Shall be fined under this title or imprisoned not more than 5 years or both."

IX. IMPLEMENTATION OF CLEAN AIR ACT AND FEDERAL WATER POLLUTION CONTROL ACT

This provision is applicable to all Federal-aid construction contracts and to all related subcontracts.

By submission of this bid/proposal or the execution of this contract, or subcontract, as appropriate, the bidder, proposer, Federal-aid construction contractor, or subcontractor, as appropriate, will be deemed to have stipulated as follows:

1. That any person who is or will be utilized in the performance of this contract is not prohibited from receiving an award due to a violation of Section 508 of the Clean Water Act or Section 306 of the Clean Air Act.
2. That the contractor agrees to include or cause to be included the requirements of paragraph (1) of this Section X in every subcontract, and further agrees to take such action as the contracting agency may direct as a means of enforcing such requirements.

X. CERTIFICATION REGARDING DEBARMENT, SUSPENSION, INELIGIBILITY AND VOLUNTARY EXCLUSION

This provision is applicable to all Federal-aid construction contracts, design-build contracts, subcontracts, lower-tier subcontracts, purchase orders, lease agreements, consultant contracts or any other covered transaction requiring FHWA approval or that is estimated to cost $25,000 or more – as defined in 2 CFR Parts 180 and 1200.

1. **Instructions for Certification – First Tier Participants:**

a. By signing and submitting this proposal, the prospective first tier participant is providing the certification set out below.

b. The inability of a person to provide the certification set out below will not necessarily result in denial of participation in this covered transaction. The prospective first tier participant shall submit an explanation of why it cannot provide the certification set out below. The certification or explanation will be considered in connection with the department or agency's determination whether to enter into this transaction. However, failure of the prospective first tier participant to furnish a certification or an explanation shall disqualify such a person from participation in this transaction.

c. The certification in this clause is a material representation of fact upon which reliance was placed when the contracting agency determined to enter into this transaction. If it is later determined that the prospective participant knowingly rendered an erroneous certification, in addition to other remedies available to the Federal Government, the contracting agency may terminate this transaction for cause of default.

d. The prospective first tier participant shall provide immediate written notice to the contracting agency to whom this proposal is submitted if any time the prospective first tier participant learns that its certification was erroneous when submitted or has become erroneous by reason of changed circumstances.

e. The terms "covered transaction," "debarred," "suspended," "ineligible," "participant," "person," "principal," and "voluntarily excluded," as used in this clause, are defined in 2 CFR Parts 180 and 1200. "First Tier Covered Transactions" refers to any covered transaction between a grantee or subgrantee of Federal funds and a participant (such as the prime or general contract). "Lower Tier Covered Transactions" refers to any covered transaction under a First Tier Covered Transaction (such as subcontracts). "First Tier Participant" refers to the participant who has entered into a covered transaction with a grantee or subgrantee of Federal funds (such as the prime or general contractor). "Lower Tier Participant" refers any participant who has entered into a covered transaction with a First Tier Participant or other Lower Tier Participants (such as subcontractors and suppliers).

f. The prospective first tier participant agrees by submitting this proposal that, should the proposed covered transaction be entered into, it shall not knowingly enter into any lower tier covered transaction with a person who is debarred, suspended, declared ineligible, or voluntarily excluded from participation in this covered transaction, unless authorized by the department or agency entering into this transaction.

g. The prospective first tier participant further agrees by submitting this proposal that it will include the clause titled "Certification Regarding Debarment, Suspension, Ineligibility and Voluntary Exclusion-Lower Tier Covered Transactions," provided by the department or contracting agency, entering into this covered transaction, without modification, in all lower tier covered transactions and in all solicitations for lower tier covered transactions exceeding the $25,000 threshold.

h. A participant in a covered transaction may rely upon a certification of a prospective participant in a lower tier covered transaction that is not debarred, suspended, ineligible, or voluntarily excluded from the covered transaction, unless it knows that the certification is erroneous. A participant is responsible for ensuring that its principals are not suspended, debarred, or otherwise ineligible to participate in covered transactions. To verify the eligibility of its principals, as well as the eligibility of any lower tier prospective participants, each participant may, but is not required to, check the Excluded Parties List System website (https://www.epls.gov/), which is compiled by the General Services Administration.

i. Nothing contained in the foregoing shall be construed to require the establishment of a system of records in order to render in good faith the certification required by this clause. The knowledge and information of the prospective participant is not required to exceed that which is normally possessed by a prudent person in the ordinary course of business dealings.

j. Except for transactions authorized under paragraph (f) of these instructions, if a participant in a covered transaction knowingly enters into a lower tier covered transaction with a person who is suspended, debarred, ineligible, or voluntarily excluded from participation in this transaction, in addition to other remedies available to the Federal Government, the department or agency may terminate this transaction for cause or default.

* * * * *

2. Certification Regarding Debarment, Suspension, Ineligibility and Voluntary Exclusion – First Tier Participants:

a. The prospective first tier participant certifies to the best of its knowledge and belief, that it and its principals:

(1) Are not presently debarred, suspended, proposed for debarment, declared ineligible, or voluntarily excluded from participating in covered transactions by any Federal department or agency;

(2) Have not within a three-year period preceding this proposal been convicted of or had a civil judgment rendered against them for commission of fraud or a criminal offense in connection with obtaining, attempting to obtain, or performing a public (Federal, State or local) transaction or contract under a public transaction; violation of Federal or State antitrust statutes or commission of embezzlement, theft, forgery, bribery, falsification or destruction of records, making false statements, or receiving stolen property;

(3) Are not presently indicted for or otherwise criminally or civilly charged by a governmental entity (Federal, State or local) with commission of any of the offenses enumerated in paragraph (a)(2) of this certification; and

(4) Have not within a three-year period preceding this application/proposal had one or more public transactions (Federal, State or local) terminated for cause or default.

b. Where the prospective participant is unable to certify to any of the statements in this certification, such prospective participant shall attach an explanation to this proposal.

2. **Instructions for Certification - Lower Tier Participants:**

(Applicable to all subcontracts, purchase orders and other lower tier transactions requiring prior FHWA approval or estimated to cost $25,000 or more - 2 CFR Parts 180 and 1200)

a. By signing and submitting this proposal, the prospective lower tier is providing the certification set out below.

b. The certification in this clause is a material representation of fact upon which reliance was placed when this transaction was entered into. If it is later determined that the prospective lower tier participant knowingly rendered an erroneous certification, in addition to other remedies available to the Federal Government, the department, or agency with which this transaction originated may pursue available remedies, including suspension and/or debarment.

c. The prospective lower tier participant shall provide immediate written notice to the person to which this proposal is submitted if at any time the prospective lower tier participant learns that its certification was erroneous by reason of changed circumstances.

d. The terms "covered transaction," "debarred," "suspended," "ineligible," "participant," "person," "principal," and "voluntarily excluded," as used in this clause, are defined in 2 CFR Parts 180 and 1200. You may contact the person to which this proposal is submitted for assistance in obtaining a copy of those regulations. "First Tier Covered Transactions" refers to any covered transaction between a grantee or subgrantee of Federal funds and a participant (such as the prime or general contract). "Lower Tier Covered Transactions" refers to any covered transaction under a First Tier Covered Transaction (such as subcontracts). "First Tier Participant" refers to the participant who has entered into a covered transaction with a grantee or subgrantee of Federal funds (such as the prime or general contractor). "Lower Tier Participant" refers any participant who has entered into a covered transaction with a First Tier Participant or other Lower Tier Participants (such as subcontractors and suppliers).

e. The prospective lower tier participant agrees by submitting this proposal that, should the proposed covered transaction be entered into, it shall not knowingly enter into any lower tier covered transaction with a person who is debarred, suspended, declared ineligible, or voluntarily excluded from participation in this covered transaction, unless authorized by the department or agency with which this transaction originated.

f. The prospective lower tier participant further agrees by submitting this proposal that it will include this clause titled "Certification Regarding Debarment, Suspension, Ineligibility and Voluntary Exclusion-Lower Tier Covered Transaction," without modification, in all lower tier covered transactions and in all solicitations for lower tier covered transactions exceeding the $25,000 threshold.

g. A participant in a covered transaction may rely upon a certification of a prospective participant in a lower tier covered transaction that is not debarred, suspended, ineligible, or voluntarily excluded from the covered transaction, unless it knows that the certification is erroneous. A participant is responsible for ensuring that its principals are not suspended, debarred, or otherwise ineligible to participate in covered transactions. To verify the eligibility of its principals, as well as the eligibility of any lower tier prospective participants, each participant may, but is not required to, check the Excluded Parties List System website (https://www.epls.gov/), which is compiled by the General Services Administration.

h. Nothing contained in the foregoing shall be construed to require establishment of a system of records in order to render in good faith the certification required by this clause. The knowledge and information of participant is not required to exceed that which is normally possessed by a prudent person in the ordinary course of business dealings.

i. Except for transactions authorized under paragraph e of these instructions, if a participant in a covered transaction knowingly enters into a lower tier covered transaction with a person who is suspended, debarred, ineligible, or voluntarily excluded from participation in this transaction, in addition to other remedies available to the Federal Government, the

department or agency with which this transaction originated may pursue available remedies, including suspension and/or debarment.

* * * * *

Certification Regarding Debarment, Suspension, Ineligibility and Voluntary Exclusion--Lower Tier Participants:

1. The prospective lower tier participant certifies, by submission of this proposal, that neither it nor its principals is presently debarred, suspended, proposed for debarment, declared ineligible, or voluntarily excluded from participating in covered transactions by any Federal department or agency.

2. Where the prospective lower tier participant is unable to certify to any of the statements in this certification, such prospective participant shall attach an explanation to this proposal.

* * * * *

XI. CERTIFICATION REGARDING USE OF CONTRACT FUNDS FOR LOBBYING

This provision is applicable to all Federal-aid construction contracts and to all related subcontracts which exceed $100,000 (49 CFR 20).

1. The prospective participant certifies, by signing and submitting this bid or proposal, to the best of his or her knowledge and belief, that:

a. No Federal appropriated funds have been paid or will be paid, by or on behalf of the undersigned, to any person for influencing or attempting to influence an officer or employee of any Federal agency, a Member of Congress, an officer or employee of Congress, or an employee of a Member of Congress in connection with the awarding of any Federal contract, the making of any Federal grant, the making of any Federal loan, the entering into of any cooperative agreement, and the extension, continuation, renewal, amendment, or modification of any Federal contract, grant, loan, or cooperative agreement.

b. If any funds other than Federal appropriated funds have been paid or will be paid to any person for influencing or attempting to influence an officer or employee of any Federal agency, a Member of Congress, an officer or employee of Congress, or an employee of a Member of Congress in connection with this Federal contract, grant, loan, or cooperative agreement, the undersigned shall complete and submit Standard Form-LLL, "Disclosure Form to Report Lobbying," in accordance with its instructions.

2. This certification is a material representation of fact upon which reliance was placed when this transaction was made or entered into. Submission of this certification is a prerequisite for making or entering into this transaction imposed by 31 U.S.C. 1352. Any person who fails to file the required certification shall be subject to a civil penalty of not less than $10,000 and not more than $100,000 for each such failure.

3. The prospective participant also agrees by submitting its bid or proposal that the participant shall require that the language of this certification be included in all lower tier subcontracts, which exceed $100,000 and that all such recipients shall certify and disclose accordingly.

ATTACHMENT A - EMPLOYMENT AND MATERIALS PREFERENCE FOR APPALACHIAN DEVELOPMENT HIGHWAY SYSTEM OR APPALACHIAN LOCAL ACCESS ROAD CONTRACTS

This provision is applicable to all Federal-aid projects funded under the Appalachian Regional Development Act of 1965.

1. During the performance of this contract, the contractor undertaking to do work which is, or reasonably may be, done as on-site work, shall give preference to qualified persons who regularly reside in the labor area as designated by the DOL wherein the contract work is situated, or the subregion, or the Appalachian counties of the State wherein the contract work is situated, except:

a. To the extent that qualified persons regularly residing in the area are not available.

b. For the reasonable needs of the contractor to employ supervisory or specially experienced personnel necessary to assure an efficient execution of the contract work.

c. For the obligation of the contractor to offer employment to present or former employees as the result of a lawful collective bargaining contract, provided that the number of nonresident persons employed under this subparagraph (1c) shall not exceed 20 percent of the total number of employees employed by the contractor on the contract work, except as provided in subparagraph (4) below.

2. The contractor shall place a job order with the State Employment Service indicating (a) the classifications of the laborers, mechanics and other employees required to perform the contract work, (b) the number of employees required in each classification, (c) the date on which the participant estimates such employees will be required, and (d) any other pertinent information required by the State Employment Service to complete the job order form. The job order may be placed with the State Employment Service in writing or by telephone. If during the course of the contract work, the information submitted by the contractor in the original job order is substantially modified, the participant shall promptly notify the State Employment Service.

3. The contractor shall give full consideration to all qualified job applicants referred to him by the State Employment Service. The contractor is not required to grant employment to any job applicants who, in his opinion, are not qualified to perform the classification of work required.

4. If, within one week following the placing of a job order by the contractor with the State Employment Service, the State Employment Service is unable to refer any qualified job applicants to the contractor, or less than the number requested, the State Employment Service will forward a certificate to the contractor indicating the unavailability of applicants. Such certificate shall be made a part of the contractor's permanent project records. Upon receipt of this certificate, the contractor may employ persons who do not normally reside in the labor area to fill positions covered by the certificate, notwithstanding the provisions of subparagraph (1c) above.

5. The provisions of 23 CFR 633.207(e) allow the contracting agency to provide a contractual preference for the use of mineral resource materials native to the Appalachian region.

6. The contractor shall include the provisions of Sections 1 through 4 of this Attachment A in every subcontract for work which is, or reasonably may be, done as on-site work.

ATTACHMENT "F"

BUY AMERICA REQUIREMENTS

Source of Supply – Steel and Iron (Federal Aid Contracts Only): For Federal-aid contracts, the Contractor will only use steel and iron produced in the United States, in accordance with the buy America provisions of 23 CFR 635.410. Contractor will ensure that all manufacturing processes for these materials occur in the United States. A manufacturing process is any process that modifies the chemical content, physical shape, size or final finish of a product, beginning with the initial melding and mixing and continuing through the bending and coating stages. A manufactured steel or iron product is complete only when all grinding, drilling, welding, finishing and coating have been completed. If a domestic product is taken outside the United States for any process, it becomes foreign source material. When using steel and iron as a component of any manufactured product incorporated into the project (*e.g.*, concrete pipe, pre-stressed beams, corrugated steel pipe, etc.), these same provisions apply, except that the manufacturer may use minimal quantities of foreign steel and iron when the cost of such foreign materials does not exceed 0.1% of the compensation or $2,500, whichever is greater. These requirements are applicable to all steel and iron materials incorporated into the finished work, but are not applicable to steel and iron items that the Contractor uses but does not incorporate into the finished work. The Contractor shall provide a certification from the producer of steel or iron, or any product containing steel or iron as a component, stating that all steel or iron furnished or incorporated into the finished product was manufactured in the United States in accordance with the requirements of this provision. Such certification shall also include: (1) a statement that the product was produced entirely within the United States, or (2) a statement that the product was produced with the United States except for minimal quantities of foreign steel and iron and specify the actual value of the product. Each such certification shall be furnished to the AUTHORITY prior to incorporating the material into the project. When FHWA allows the use of foreign steel on a project, Contractor shall furnish invoices to document the costs of such material, and obtain the AUTHORITY'S written approval prior to incorporating the material into the project.

ATTACHMENT "G"

PERFORMANCE AND PAYMENT BOND

BY THIS BOND, WE, _____, Inc., as Principal and _____ a Corporation, as Surety, are bound to the Solid Waste Authority of Palm Beach County, hereinafter referred to as "Authority", in the sum of _____ **Dollars (up to $10,000,000),** for payment of which we bind ourselves, our heirs, personal representatives, successors, and assigns, jointly and severally.

THE CONDITION OF THIS BOND is that if Principal:

1. Performs the Agreement dated _____, 20_____ between Principal and Authority for Proposal of Hurricane/Disaster Debris Removal, Reduction and Disposal, **Agreement No. 22-201,** the Agreement being made a part of this bond by reference, in the time and in the manner prescribed in the Agreement, and;

2. Promptly makes payment to all claimants, as defined in Section 255.05(1), Florida Statutes, supplying Principal with labor, materials and supplies, used directly or indirectly by Principal in the prosecution of the work provided for in the Agreement, and;

3. Pays Authority all loss, damages, expenses, costs, and attorney's fees, including appellate proceedings, that Authority sustains because of a default by Principal under the Agreement, and;

4. Performs the guarantee of all work and materials furnished under the Agreement for the time specified in the Agreement, and;

5. At completion of all work covered by Agreement and Final Payment by Authority to Principal then Principal will replace this Performance and Payment Bond with a Proposal Bond, in the amount of 5% of this Performance and Payment Bond, to be held by the Authority as a guarantee that Principal will provide to the Authority a Performance and Payment Bond in the amount of up to $10,000,000 on the occasion of a subsequent Task Order in accordance with the above referenced Agreement;

then this bond is void; otherwise it remains in full force.

Surety shall be responsible for any and all liquidated damages imposed by the Authority for the referenced Agreement.

Any changes in or under the Agreement Documents and compliance or noncompliance with any formalities connected with the Agreement or the changes does not affect Surety's obligation under this bond. Any increase in the total Agreement amount as authorized by the Authority shall accordingly increase the Surety's obligation by the same dollar amount of said increase. CONTRACTOR shall be responsible for notification to Surety of all such changes.

See subsection (2) of Section 255.05, Florida Statutes as amended for the notice and time limitations for claimants.

Signed and sealed this ____ day of _____, 20____.

PRINCIPAL:_____

By: _____
Signature

WITNESS:

Name: _____

1. _____

Title: _____

2. _____

Address: _____

_____

Telephone: _____

SURETY: _____

By: _____
Signature

WITNESS:

Name: _____

1. _____

Title: _____

2. _____

Address: _____

_____

Telephone: _____

NOTE: Date of Bond must not be prior to date of Agreement. If CONTRACTOR is a Partnership, all partners must execute bond.

IMPORTANT: Surety companies executing bonds **must** appear and remain on the Treasury Department's most current list (Circular 570 as amended) during construction, guarantee and warranty periods, and be authorized to transact business in the State of Florida, and be pre-approved by the Authority.

YOUR PARTNER FOR
SOLID WASTE SOLUTIONS

REQUEST FOR PROPOSAL

FOR

HURRICANE/DISASTER DEBRIS REMOVAL, REDUCTION AND DISPOSAL

RFP NO. 22-201/DL

JANUARY 2022

SOLID WASTE AUTHORITY OF PALM BEACH COUNTY
7501 NORTH JOG ROAD
WEST PALM BEACH, FLORIDA 33412
(561) 640-4000

TABLE OF CONTENTS

PART I

GENERAL INFORMATION

1. Purpose....1
2. Pre-Proposal Conference....1
3. Background....1
4. Evaluation Process....1
5. Procurement Schedule....2
6. Proposal Submission and Withdrawal....2
7. Communication Protocol....2
8. Addenda....2
9. Rights of the Authority....3
10. Proposal Preparation Costs....3
11. Bond Requirements....4
12. Interpretations....4
13. Non-Collusion Affidavit....4
14. Public Entity Crimes....4
15. Public Records Act / Information Disclosure to Third Parties....4
16. Posting of Recommendation for Award....5
17. Insurance....5
18. Cone of Silence....5
19. Agreements with other Governmental Entities....7
20. Scrutinized Companies....7
21. Inspector General....7
22. Commercial Non-Discrimination Policy....8
23. Third Party Beneficiary Disclaimer....9
24. E-Verify – Employment Eligibility....9
25. Equal Business Opportunity Program....9

PART II

STATEMENT OF WORK

2.1. Project Description and Requirements....10
2.2. Introduction....10
2.3. Planning Standard for Debris Removal and Disposal....11
2.4. Debris Management....11
2.5 Scope of Work/Overview....13
2.6 Debris Removal and Disposal Operations....15
2.7 Temporary Debris Management Sites (TDMS) Operations....21
2.8. Processing, Loading and Hauling Material....24
2.9 Miscellaneous Requirements....24
2.10 Performance of Contractor....26

PART III

PROPOSAL SUBMISSION REQUIREMENTS

3.1. Proposal Submission Requirements and Format....27
3.2. Content....27

PART IV

PROPOSAL EVALUATION AND AWARD

4.1. General 31
4.2. Evaluation Criteria 31
4.3. Evaluation Method 31
4.4. Award 33

PART V

PROPOSAL FORMS

1. Proposal Form 1 – Transmittal Letter 34
2. Proposal Form 2 – Proposal Bond 37
3. Proposal Form 3 – Price Proposal 39
4. Proposal Form 4 – Non-Collusion Affidavit 42
5. Proposal Form 5 – Drug-Free Workplace 43
6. Proposal Form 6 – PROPOSER'S Qualification Statement 44
7. Proposal Form 7 – Scrutinized Certification List 49

PART VI

ATTACHMENTS

Attachment A – Sample Contract Agreement
Attachment B – Task Order Disaster Debris Management
Attachment C – Pre-Approved Temporary Debris Management Sites Map
Attachment D – Public Assistance Program and Policy Guide
Attachment E – Mobilization Schedule
Attachment F – FHWA Form 1273
Attachment G – Buy America Requirements
Attachment H – Performance and Payment Bond

PART I
GENERAL INFORMATION

1. PURPOSE:

A. The purpose of this Request for Proposal (RFP) is to solicit formal written Proposals from experienced and qualified individuals, corporations, partnerships and other legal entities (PROPOSER) to perform Hurricane/Disaster Debris Removal, Reduction, and Disposal Services for the Solid Waste Authority of Palm Beach County (AUTHORITY). The AUTHORITY envisions the need for four (4) CONTRACTORS to carry out the debris removal and disposal work throughout Palm Beach County.

B. The contract will be for an initial three (3) year term with the option for an additional three (3) year renewal upon review and approval by the AUTHORITY.

2. PRE-PROPOSAL CONFERENCE:

A. A Virtual Mandatory Pre-Proposal Conference will be held on **WEDNESDAY, FEBRUARY 2, 2022, at 10:00am,** open to all interested parties at which time the AUTHORITY staff shall be present to answer questions and explain the intent of the RFP documents.

B. Any conclusions reached at this conference which amend the RFP documents, will be issued in the form of a written Addendum.

3. BACKGROUND:

A. The AUTHORITY is a Dependent Special District created by the Florida State Legislature pursuant to Chapter 2001-331, laws of Florida, known as the Palm Beach County Solid Waste Act. The AUTHORITY is governed by the seven (7) elected County Commissioners of Palm Beach County, Florida. The governing board members are elected for terms as determined by the Solid Waste Act.

B. The AUTHORITY is the governmental agency responsible for providing an economical and environmentally conscious integrated Solid Waste Management System for Palm Beach County, Florida. With approximately 400 employees, the AUTHORITY provides solid waste disposal and recycling services and programs to the County's 1.5 million residents and businesses. The AUTHORITY also provides solid waste and recycling collection services to the residents and businesses in unincorporated Palm Beach County through private haulers under exclusive franchise agreements.

C. The AUTHORITY has built an award-winning integrated system of facilities that combines recycling, renewable energy and landfilling to effectively manage the county's waste. The AUTHORITY's system includes two waste-to-energy facilities, landfills, a recovered materials processing facility, a biosolids processing facility, seven (7) home chemical collection facilities and a network of six (6) transfer stations.

4. EVALUATION PROCESS:

The evaluation process will be conducted by the Evaluation Committee in accordance with, but not limited to, the methods and criteria described in *Part IV – Proposal Evaluation and Award*.

5. PROCUREMENT SCHEDULE:

A summary schedule of the major activities associated with the AUTHORITY'S procurement process for this Project is presented in *Table 1 – Procurement Schedule*. The AUTHORITY, at its sole and unfettered discretion, may modify the schedule as it deems appropriate. The AUTHORITY will notify of any changes in association with submittal dates by written Addenda in accordance with *Part I, Section 8 – Addenda*.

Table 1 - Procurement Schedule

NO.	ACTIVITY	DATE
1	Issue RFP	January 14, 2022
2	Mandatory Pre-Proposal Meeting	February 2, 2022
3	Last Date for Authority to Receive Questions on RFP	February 7, 2022
4	Last Date for Authority to Issue Addendum in Response to Questions	February 9, 2022
5	Proposal Submission Due Date	February 18, 2022
6	Evaluation Committee Meeting, *tentative date*	February 28, 2022

6. PROPOSAL SUBMISSION and WITHDRAWAL:

A. The AUTHORITY uses to the Negometrix e-Procurement system, a 100% digital method of accessing and responding to solicitations (Negometrix). Therefore, PROPOSERS must submit their proposal via Negometrix. The AUTHORITY must receive all Proposals **no later than 2:00 P.M.,** Eastern Time, on the date established in *Part I, Section 5 – Procurement Schedule, of this RFP.*

B. The AUTHORITY cautions those submitting Proposals to ensure the accuracy of the document uploads to Negometrix.

C. The PROPOSER may withdraw their Proposal by notifying the AUTHORITY'S Purchasing Services office in writing at any time prior to the time set for the Proposals receipt deadline. PROPOSERS may withdraw their Proposals in person or through an authorized representative. Proposals, once opened, become the property of the AUTHORITY and will not be returned to the PROPOSERS.

7. COMMUNICATION PROTOCOL:

All questions and communications concerning this procurement process must be directed to Diane LeRay, CPPO, CPPB, Procurement Manager. All requests for clarifications or additional information **must be submitted in writing via electronic mail to dleray@swa.org or through Negometrix. All questions shall be submitted no later than the date specified in *Part 1, Section 5 – Procurement Schedule*** of this RFP. The AUTHORITY will record its responses to questions, if any, and address them in the form of a written Addendum to this RFP.

8. ADDENDA:

A. Should revisions to the RFP become necessary, the AUTHORITY will issue written Addenda. All Addenda must be acknowledged. This Acknowledgement must be included in Proposal Form 1 – Transmittal Letter. PROPOSER'S submittal may be rejected as non-responsive if PROPOSER has failed to submit Proposal without Addenda Acknowledgement. ***The AUTHORITY will issue all addenda through Negometrix.***

B. All PROPOSERS should contact the AUTHORITY no more than five (5) calendar days before the due date for submitting Proposals to ascertain whether any Addenda have been issued. Failure of the PROPOSER to

make this inquiry could result in its Proposal being non-responsive in the event addenda were issued and not acknowledged by the PROPOSER in their submittal.

C. No Addenda will be issued later than five (5) calendar days prior to the due date for receipt of Proposals except an Addendum withdrawing the RFP or one that includes postponement of the date for receipt of Proposals.

9. RIGHTS OF THE AUTHORITY:

This RFP constitutes an invitation for submission of Proposals to the AUTHORITY. This RFP does not obligate the AUTHORITY to procure or contract for any of the scopes of services set forth in this RFP. The AUTHORITY reserves and holds at its sole and unfettered discretion, various rights and options under Florida law, including without limitation, the following:

- To prepare and issue addenda to the RFP that may expand, restrict, or cancel any portion or all work described in the RFP without obligation to commence a new procurement process or issue a modified or amended RFP;
- To receive questions from potential PROPOSERS and to provide such answers in writing as it deems appropriate;
- To waive any informalities, technicalities or irregularities in the Proposals submitted;
- To reject any and all Proposal submissions;
- To change the date for receipt of Proposals or any deadlines and dates specified in the RFP;
- To change the procurement and/or selection process prior to receipt of Proposals;
- To conduct investigations with respect to the information provided by each PROPOSER and to request additional information (either in writing or in presentations and interviews) to support such PROPOSER'S responses and submittals;
- To visit facilities referenced in the PROPOSER'S submittal at any time or times during the procurement process;
- To seek clarification of Proposals from the PROPOSERS either in writing or in presentations and interviews, and;
- To cancel the RFP with or without the substitution of another RFP.

10. PROPOSAL PREPARATION COSTS:

The AUTHORITY accepts no liability for costs and expenses incurred by the PROPOSER in preparation and submission of Proposals and responses to clarifications from the AUTHORITY, potential site visits and interviews, negotiations, future RFP or any other work performed in connection with the Proposal. Each PROPOSER that enters into the procurement process shall prepare the required materials and submittals at its own expense and with the express understanding that they cannot make any claims whatsoever for reimbursement from the AUTHORITY for the costs and expenses associated with the process. PROPOSER should prepare their submittal providing a straightforward and concise description of the PROPOSER'S ability to meet the requirements of the RFP. Unnecessarily elaborate brochures, artwork, expensive paper, bindings, visual and other presentation materials, beyond that sufficient to present a complete and effective response to this RFP is not desired.

11. BOND REQUIREMENTS:

A. PROPOSER shall submit a completed Proposal Form 2 – Proposal Bond (same as a Bid Bond) in the amount of five hundred thousand dollars ($500,000). Unsuccessful PROPOSER'S Proposal Bond will be returned upon execution of an Agreement with the successful PROPOSER. **Proposal Form 2 – Proposal Bond shall also be accompanied by written Irrevocable Letter of Commitment** from an A- or better rated Surety Company licensed to do business in the State of Florida to provide a ten-million-dollar ($10,000,000) Performance and Payment Bond on the AUTHORITY'S form (Attachment H) upon issuance of first Task Order.

B. The AUTHORITY requires that the Proposal Bond of PROPOSER that is selected be in effect for the entire term of the Agreement and also that the Irrevocable Letter of Commitment to provide the Performance and Payment Bond also be in effect for the entire term of the Agreement until a debris generating event occurs and the successful PROPOSER is called to active duty. At the start of any and all active-duty periods the Proposal Bond will be returned to the successful PROPOSER(s) in exchange for the Performance and Payment Bond which will need to be in effect for the duration of the active duty period. Under no circumstances shall the successful PROPOSER start work until he/she has supplied an acceptable Performance and Payment Bond. If the successful PROPOSER fails to supply an acceptable Performance and Payment Bond, as specified in this RFP, the AUTHORITY shall be entitled to retain the Proposal Bond to rectify the PROPOSER'S unacceptable performance.

12. INTERPRETATIONS:

A. The AUTHORITY will not be bound by or responsible for any explanation or interpretation of the RFP documents other than those given in written addenda. In no event shall PROPOSERS rely on any oral statement by the AUTHORITY, its staff, agents, advisors, or consultants.

B. Any PROPOSER that submits in its Proposal to the AUTHORITY any information which is determined to be substantially inaccurate, misleading, exaggerated, or incorrect, may be disqualified from consideration.

13. NON – COLLUSION AFFIDAVIT:

The PROPOSER is required to submit Proposal Form 4 – Non-Collusion Affidavit stipulating Agreement to the following: "PROPOSER certifies that its Proposal is made without previous understanding, Agreement, or connection with any person, firm, or corporation making a Proposal for the same item(s) and is in all respects fair, without outside control, collusion, fraud, or otherwise illegal action".

14. PUBLIC ENTITY CRIMES:

Pursuant to Section 287.133(2)(a), as amended: A person or affiliate who has been placed on the convicted vendor list following a conviction for a public entity crime may not submit a bid on a contract to provide any goods or services to a public entity, may not submit a bid on a contract with a public entity for the construction or repair of a public building or public work, may not submit bids on leases of real property to a public entity, may not be awarded or perform work as a contractor, provider supplier, subcontractor, or consultant under a contract with any public entity, and may not transact business with any public entity in excess of the threshold amount provided in Section 287.017 for CATEGORY TWO for a period of thirty-six (36) months from the date of being placed on the convicted vendor list.

15. PUBLIC RECORDS ACT/INFORMATION DISCLOSURE TO THIRD PARTIES:

A. Sealed bids, proposals, SOQs, or replies received by the AUTHORITY pursuant to a competitive solicitation are exempt from s. 119.07(1) and s.24(a), Article I of the State Constitution until such time as the AUTHORITY provides notice of an intended decision or until thirty (30) days after opening the bids,

proposals, SOQs, or final replies, whichever is earlier. As such, the AUTHORITY shall not in any way be liable or responsible for the proper disclosure or result of the proper disclosure of any submissions or portions thereof submitted in response to the RFP.

B. The law provides for certain exemptions from disclosure. If the PROPOSER believes that some information contained in their Proposals is exempt from disclosure, the PROPOSER is instructed to label such information as specifying the exact section of the public records, or other Florida or Federal law that justifies nondisclosure, and request in writing the AUTHORITY keep such information confidential and free from disclosure. The AUTHORITY reserves the right to make any final determination of the applicability of the public records or other Florida or Federal law. Prior to releasing any information, the AUTHORITY will inform the PROPOSER and allow the PROPOSER to seek an injunction prohibiting the AUTHORITY from releasing the information. Each PROPOSER agrees that the AUTHORITY may reveal any confidential and exempt materials to designated AUTHORITY staff and Palm Beach County officials involved in the evaluation process, and to any outside consultant or third parties who serve on the Evaluation Committee or who are hired by the AUTHORITY to assist in the evaluation process.

C. Furthermore, each PROPOSER agrees to indemnify and hold harmless the AUTHORITY and each of their officers, employees, and agents from all costs, damages, and expenses incurred in connection with refusing to disclose any material, which the PROPOSER has designated as confidential and exempt.

D. Oral presentations, meetings where PROPOSER(S) is/are answering questions, negotiations, and AUTHORITY meetings to discuss negotiation strategy are exempt from public access in accordance with Sections 286.0113(2), Florida Statutes.

16. POSTING OF RECOMMENDATION FOR AWARD:

A. Recommendation for Award will be posted on the date of the Evaluation Committee meeting for a period of five (5) calendar days. Failure to file a protest to the Director of Purchasing Services within the time prescribed, as more fully detailed in the AUTHORITY'S Purchasing Manual, Section 10, shall constitute a waiver of protest proceedings.

B. It is the PROPOSER'S sole responsibility to ascertain the time and date of posting of the Recommendation for Award. This may be accomplished by telephone, fax, e-mail, or other means deemed timely by the PROPOSER.

C. It is understood by the PROPOSER that the Selection/Evaluation Committee makes only a recommendation which does not constitute the actual award itself. The actual award will be made by the SWA Board at a duly noticed public meeting.

D. Nothing contained in this Section shall limit or divest the SWA Board of its authority pursuant to its internal policies, AUTHORITY'S Purchasing Manual, the Special Act or general law.

17. INSURANCE:

The awarded PROPOSER(S) shall maintain insurance coverage reflecting the minimum amounts and conditions specified in the attached Sample Agreement, Attachment A. In the event the PROPOSER(S) is a governmental entity or a self-insured organization, different insurance requirements may apply. Misrepresentation of any material fact, whether intentional or not, regarding the PROPOSER(S) insurance coverage, policies or capabilities may be grounds for rejection of the proposal(s) and rescission of any ensuing agreement(s).

18. CONE OF SILENCE:

18.1 Cone of silence means a prohibition on any communication, written or oral, regarding a particular

request for proposal, request for qualification, bid, or any other competitive solicitation between:

(a) Any person, recognized legal entity, or either of their respective representative(s) seeking an award from such competitive solicitation; and
(b) any person who is a member of a selection or evaluation committee or panel whose purpose is to make selections, recommendations or evaluations in connection with a competitive selection process; and
(c) any employee of the department from which the contract solicitation originated and for whose primary purpose it will serve, any employee that is a Chief of the Solid Waste Authority of Palm Beach County regardless of the originating department; and
(d) Notwithstanding the above, any person, legal entity, or their respective representative(s), may contact any member(s) of the Authority's Governing Board, the Executive Director, Purchasing Director or Procurement Manager, however, any such communication shall only be by written correspondence, and in all cases the Purchasing Director shall be copied. Any oral communications to any of these persons(s) listed in this subsection regarding a particular competitive solicitation is strictly prohibited.

18.2 For the purposes of this section, a person or legal entity's representative shall include any person or group of persons acting on behalf of that person or legal entity, including but not limited to an employee, partner, officer, director, consultant, lobbyist, or any actual or potential subcontractor or consultant of the person or legal entity.

18.3 The Cone of Silence shall be in effect as of the deadline to submit the proposal, bid, or other response to a competitive solicitation. Each request for proposal, request for qualification, bid, or any other competitive solicitation shall provide notice of the Cone of Silence requirements and refer to this policy.

18.4 The Cone of Silence shall remain in effect for all person(s), legal entity, or their respective representative(s) submitting a response to a competitive solicitation until such time as the provisions of subsection 17.7 are satisfied, even if the person withdraws his/her submittal from the competitive process, or is otherwise eliminated from consideration consistent with the procedures of the competitive process.

18.5 The provisions of this policy shall not apply to oral communications at any proceeding, including pre-bid conferences, oral presentations before selection committees, contract negotiations during any meeting, presentations made to the board, and protest hearings. Further, the Cone of Silence shall not apply to contract negotiations between any employee and the intended awardees, or any dispute resolution process following the filing of a protest between the person filing the protest and any employee.

18.6 The Cone of Silence shall not apply to any purchase made in an amount less than the competitive bid threshold set forth in the Authority Purchasing manual.

18.7 The Cone of Silence shall terminate at the time the Board, or Authority staff, if authorized to act on behalf of the Board, awards or approves a contract, rejects all bids or responses, or otherwise takes action which ends the solicitation process.

18.8 The Board, by means of action taken at any properly noticed Governing Board meeting, may invoke the Cone of Silence earlier than the times specified in this section, for any procurement.

18.9 Any and all questions regarding the individuals who may or may not be covered under the Cone of Silence should be directed to the Purchasing Director or designee.

19. AGREEMENTS WITH OTHER GOVERNMENTAL ENTITIES:

All PROPOSERS submitting a response to this RFP agree that such response also constitutes a response to all State and local government agencies of the State of Florida under the same terms and conditions, for the same prices and for the same effective period as specified in this RFP, should the successful PROPOSER deem it in the best interest of their business to do so. The Agreement(s) resulting from this RFP in no way restricts or interferes with any State or local government agencies of the State of Florida from re-solicitation for any or all items specified in this RFP.

20. SCRUTINIZED COMPANIES:

A. As provided in F.S. 287.135, by entering into this Contract or performing any work in furtherance hereof, the CONTRACTOR certifies that it, its affiliates, suppliers, subcontractors and consultants who will perform hereunder, have not been placed on the Scrutinized Companies With Activities in Sudan List or Scrutinized Companies With Activities in The Iran Petroleum Energy Sector List created pursuant to F.S. 215.473, or is engaged in business operations in Cuba or Syria.

   If the AUTHORITY determines, using credible information available to the public, that a false certification has been submitted by CONTRACTOR, this Contract may be terminated and a civil penalty equal to the greater of $2 million or twice the amount of this Contract shall be imposed, pursuant to F.S. 287.135. Said certification may be requested at the time of Contract renewal.

B. As provided in F.S. 287.135, by entering into this Contract or performing any work in furtherance hereof, the CONTRACTOR certifies that it, its affiliates, suppliers, subcontractors and consultants who will perform hereunder, have not been placed on the Scrutinized Companies that Boycott Israel List, or is engaged in a boycott of Israel, pursuant to F.S. 215.4725.

   If the AUTHORITY determines, using credible information available to the public, that a false certification has been submitted by CONTRACTOR, this Contract may be terminated and a civil penalty equal to the greater of $2 million or twice the amount of this Contract shall be imposed, pursuant to F.S. 287.135. Said certification may be requested at the time of Contract renewal.

21. INSPECTOR GENERAL:

Palm Beach County has established the Office of the Inspector General (OIG), Ordinance No. 2009-049 which is authorized and empowered to review past, present and proposed county contracts, transactions, accounts and records. The AUTHORITY has entered into an Interlocal Agreement (ILA) for Inspector General Services. This Agreement provides for the Inspector General to provide services to the AUTHORITY in accordance with the authority, functions and powers set out in the Palm Beach County Office of Inspector General Ordinance. All parties doing business with the AUTHORITY and receiving AUTHORITY funds shall fully cooperate with the Inspector General including providing access to records relating to this Agreement. The Inspector General has the power to subpoena witnesses, administer oaths, require the production of records, and audit, investigate, monitor, and inspect the activities of the CONSULTANT, its officers, agents, employees, and lobbyists in order to ensure compliance with contract specifications and detect corruption and fraud. Failure to cooperate with the Inspector General or interference with or impeding any investigation shall be in violation of Ordinance 2009-049, and punished pursuant to Section 125.69, Florida Statutes, in the same manner as a second-degree misdemeanor.

22. COMMERCIAL NON-DISCRIMINATION POLICY:

A. Statement of Policy

It is the policy of the Authority not to enter into a contract or to be engaged in a business relationship with any business entity that has discriminated in the solicitation, selection, hiring or commercial treatment of vendors, suppliers, subcontractors or commercial customers on the basis of race, color, national origin, religion, ancestry, sex, age, marital status, familial status, sexual orientation, gender identity or expression, disability, or genetic information, or on the basis of any otherwise unlawful use of characteristics regarding the vendor's, supplier's or commercial customer's employees or owners; provided that nothing in this policy shall be construed to prohibit or limit otherwise lawful efforts to remedy the effects of discrimination that have occurred or are occurring in the relevant marketplace for Palm Beach County.

B. Policy Implementation

The EBO Office shall implement this policy by periodically conducting outreach and by distributing educational materials to the Authority's contracting and vendor community and related trade associations to advise such contractors, vendors and prospective respondents of this policy and the procedures to be followed in submitting complaints alleging violations of this policy. In addition, the Executive Director, the Office of the Chief Financial Officer, the Director of Purchasing, and the Office of the General Counsel shall ensure that the following commercial nondiscrimination clause language is set forth in, and incorporated into, all the Authority contracts that result from formal solicitations:

Every contract and subcontract shall contain a nondiscrimination clause that reads as follows:

"As a condition of entering into this agreement, the company represents and warrants that it will comply with the Authority's Commercial Nondiscrimination Policy as described under Section 6.3 of the Authority's Purchasing Manual. As part of such compliance, the company shall not discriminate on the basis of race, color, national origin, religion, ancestry, sex, age, marital status, familial status, sexual orientation, gender identity or expression, disability, or genetic information in the solicitation, selection, hiring or commercial treatment of subcontractors, vendors, suppliers, or commercial customers, nor shall the company retaliate against any person for reporting instances of such discrimination. The company understands and agrees that a material violation of this clause shall be considered a material breach of this agreement and may result in termination of this agreement, disqualification or debarment of the company from participating in Authority contracts, or other sanctions. This clause is not enforceable by or for the benefit of, and creates no obligation to, any third party."

All Formal Solicitations issued for Authority contracts shall include the following certification to be completed by the Respondent:

"The undersigned Respondent hereby certifies and agrees that the following information is correct:

In preparing its response on this project, the Respondent has considered all proposals submitted from qualified, potential Subcontractors and suppliers, and has not engaged in "discrimination" as defined in the Authority's Commercial Nondiscrimination Policy as set forth in Section 6.3 of its Purchasing Manual, to wit: discrimination in the solicitation, selection or commercial treatment of any Subcontractor, vendor, supplier or commercial customer on the basis of race, color, national origin, religion, ancestry, sex, age, marital status, familial status, sexual orientation, gender identity or expression, disability, or genetic information, or on the basis of any otherwise unlawful use of characteristics regarding the vendor's, supplier's or commercial customer's employees or owners; provided that nothing in this policy shall be construed to prohibit or limit otherwise lawful efforts to remedy the effects of discrimination that have occurred or are occurring in SWA's relevant marketplace. Without limiting the foregoing, "discrimination"

also includes retaliating against any person or other entity for reporting any incident of "discrimination." Without limiting any other provision of the solicitation for responses on this project, it is understood and agreed that, if this certification is false, such false certification will constitute grounds for the Authority to reject the response submitted by the Respondent on this project, and to terminate any contract awarded based on the response. As part of its response, the Respondent shall provide to the Authority a list of all instances within the immediate past four (4) years where there has been a final adjudicated determination in a legal or administrative proceeding in the State of Florida that the Respondent discriminated against its Subcontractors, vendors, suppliers or commercial customers, and a description of the status or resolution of that complaint, including any remedial action taken. As a condition of submitting a response to the Authority, the Respondent agrees to comply with the Authority's Commercial Nondiscrimination Policy as described under its Purchasing Manual – Economic Inclusion Policy and Procedures, Section 6.3.

23. THIRD PARTY BENEFICIARY DISCLAIMER:

It is not the intention of these RFP documents to create third party beneficiary status in any person or entity that is not a direct party to the contract awarded as a result of being the successful Proposer, and no language in these RFP documents or the contract awarded pursuant to this RFP should be construed or interpreted as creating a third-party beneficiary.

24. E-VERIFY – EMPLOYMENT ELIGIBILITY:

PROPOSER warrants and represents that it is in compliance with Section 448.095, Florida Statutes, as may be amended. No later than January 1, 2021, PROPOSER shall (1) register with and use the E-Verify System (E-Verify.gov) to electronically verify the employment eligibility of all newly hired workers; and (2) verify that all of the PROPOSER's contractors/consultants and subcontractors/subconsultants performing any duties and obligations under the resultant agreement are registered with and use the E-Verify System to electronically verify the employment eligibility of all newly hired workers. AUTHORITY shall terminate the resultant agreement if it has a good faith belief that the PROPOSER has knowingly violated Section 448.09(1), Florida Statutes as may be amended.

25. EQUAL BUSINESS OPPORTUNITY PROGRAM:

A. The Governing Board of the AUTHORITY has implemented the Economic Inclusion Policy and Procedures administered by the Equal Business Opportunity (EBO) Office to ensure that all segments of its business population, including, but not limited to small, local, minority, and women-owned businesses, have an equitable opportunity to participate in the AUTHORITY'S procurement process. Refer to Section 6.1 through 6.4 of the AUTHORITY's Purchasing Manual. The AUTHORITY's Purchasing Manual is available at https://swa.org/602/PURCHASING-MANUAL. It is the intention that the PROPOSER review and understand these provisions. In addition, program tools and solicitation incentives are hereby referred to as the Affirmative Procurement Initiatives (API).

B. Each solicitation will be evaluated to determine the appropriate API to be applied, if any. The API, if applicable, will be outlined in detail in Part III "Proposal Submission Requirements" located herein.

PART II
STATEMENT OF WORK

2.1. PROJECT DESCRIPTION AND REQUIREMENTS:

A. The AUTHORITY seeks experienced firms to remove and lawfully dispose of disaster-generated debris (other than hazardous materials and household putrescible garbage) from public property and public rights-of-way, and to setup and operate Temporary Debris Management Site(s) (TDMS) in Palm Beach County, Florida, immediately after a hurricane or other disaster.

B. The objective of this RFP and subsequent contracting activity is to secure the services of an experienced CONTRACTOR who is capable of efficiently removing large volumes of disaster-generated debris from a large area in a safe, timely and cost-effective manner and lawfully disposing of all debris. CONTRACTOR must be capable of assembling, directing, and managing a work force that can complete the debris management operations in 120 days or less. The duration of effort/completion dates of all tasks will be determined jointly by the AUTHORITY and CONTRACTOR. This determination will be set in writing in appropriate Task Order(s).

C. The CONTRACTOR shall perform all work in strict accordance with Federal Emergency Management Agency (FEMA) guidelines in order to maximize recovery of reimbursable expenses. This task shall include the provision of audit quality documentation as required by and acceptable to FEMA for all work accomplished.

D. The CONTRACTOR may be required, at the AUTHORITY'S discretion, to be under the direction of an agent of the AUTHORITY.

E. While intended to cover debris management needs in any major disaster scenario, the primary focus is on the threat of hurricane damage to Palm Beach County, Florida. The planning standards used for this project are based on the anticipated impacts of a named storm event or major flood impacting Palm Beach County, Florida. The AUTHORITY intends to enter into contingency Agreement(s) as further defined herein, to provide emergency debris removal and disposal services as required by the AUTHORITY.

2.2. INTRODUCTION:

A. The AUTHORITY'S disaster recovery planning includes considerations for removing and processing the volumes and types of debris expected to be generated by a major disaster such as a hurricane or major flood and includes procedures for disposing of that debris. The planning approach is formulated in part on the concept of strategic pre-positioning of plans and resources necessary for timely, safe, coordinated recovery operations, including removal of debris from public property and rights-of-way throughout Palm Beach County using a combination of county, municipal, and CONTRACTOR forces.

B. If activation is required, the AUTHORITY intends to activate contracts on an as-needed basis as solely determined by the AUTHORITY. The AUTHORITY intends to activate the CONTRACTORS in the order of final ranking as best meets the needs of the AUTHORITY. The AUTHORITY reserves the right in its sole and unfettered discretion, to assign/reassign any or all

CONTRACTORS at any time as may be deemed appropriate depending upon the circumstance(s), the event, or any other condition which may warrant such action.

C. The AUTHORITY envisions the need for four (4) CONTRACTORS to carry out the debris removal and disposal work throughout Palm Beach County. The CONTRACTOR must have the experience and capability to manage a major workforce with multiple subcontractors and to cover the expenses associated with a major recovery operation prior to the initial AUTHORITY payment and between subsequent payments, as well as the capacity to provide the necessary bonds and insurance. The CONTRACTOR must also have an established management team, an established network of resources to provide the necessary equipment and personnel, comprehensive debris removal, volume reduction operations plan, and demonstrable experience in major disaster recovery projects.

D. The Agreement(s) to be awarded under this RFP will be contingency Agreement(s) that will be activated only in the face of an emergency. As such, no compensation will accrue to the CONTRACTOR unless and until the Agreement is activated either in anticipation of a natural disaster or immediately after such disaster.

E. The CONTRACTOR who receives an Agreement for the work, will be required to participate in certain AUTHORITY directed disaster recovery training and/or exercises, 1 to 2 days each year, at no cost to the AUTHORITY.

F. The AUTHORITY does not guarantee a CONTRACTOR will be activated if awarded an Agreement.

2.3 PLANNING STANDARD FOR DEBRIS REMOVAL AND DISPOSAL:

The AUTHORITY'S goal is to complete the debris removal and disposal process in 120 days following the storm event. This assumes that the entire area of the county will be accessible within that period. Due to the low elevation and potential for flooding, some areas might not be accessible for several weeks after a major natural disaster. The CONTRACTOR must be aware that it might not be possible to initiate operations in all parts of the county simultaneously immediately after a storm.

2.4 DEBRIS MANAGEMENT:

A. Planning for debris management operations is a function of the AUTHORITY as a supporting agency to the Palm Beach County Department of Engineering and Public Works. The AUTHORITY'S Emergency Management Coordinator will direct the debris removal and disposal operations.

B. In addition to using AUTHORITY forces and equipment, the AUTHORITY intends to execute four (4) debris removal and disposal Agreements on a contingency basis for the purpose of having CONTRACTOR(S) immediately available and committed to assisting the AUTHORITY in the aftermath of a major disaster. Each CONTRACTOR holding a debris removal and disposal Agreement will serve as a General CONTRACTOR for the purpose of debris removal and disposal operations and will be able to use his/her own and subcontractor resources to meet the obligations of the Agreement. It is anticipated, but not required, that the CONTRACTOR will use both local and non-local subcontractors.

C. When a major disaster occurs or is imminent, the AUTHORITY intends to contact the highest two (2) or three (3) ranked CONTRACTORS holding debris removal and disposal Agreements to advise them of the AUTHORITY'S intent to activate the Agreement(s). Debris removal will generally be limited to debris in, upon, or brought to county residential private and public streets and roads, rights-of-way, municipal properties and facilities, and other public sites (this includes debris from customers assessed for residential solid waste and recycling collection services by the AUTHORITY). The CONTRACTOR will be responsible for determining the method and manner of debris removal and lawful disposal operations. Disposal of debris will be at AUTHORITY approved TDMS or landfill sites. The CONTRACTOR will be responsible for the lawful disposal of all debris and debris-reduction by-products generated at all TDMS.

D. When a major disaster occurs or is imminent, the AUTHORITY will initially send out an Alert to the selected CONTRACTOR(S). This Alert will serve to activate the lines of communication between the CONTRACTOR representatives and the AUTHORITY. Subsequently, the AUTHORITY will issue the first Task Order which will authorize the CONTRACTOR to send an Operations Manager to the AUTHORITY within 24 hours of receiving such Task Order, to begin planning for the operations and mobilizing the personnel and equipment as necessary to perform the stipulated work. This first Task Order will also direct the CONTRACTOR to execute the required Performance and Payment Bond. The CONTRACTOR should anticipate receiving this first Task Order 24 to 72 hours before projected landfall of a hurricane or major flood. Depending on the nature of the storm and circumstances, the AUTHORITY may activate more than one (1) CONTRACTOR. CONTRACTOR(S) will generally be activated in order of final ranking.

E. Specific task orders will be issued to select CONTRACTORS based on the best interest of Palm Beach County. The AUTHORITY reserves the right to assign work or task orders to various CONTRACTORS based on capability. The AUTHORITY does not guarantee a cradle to grave pricing arrangement but reserves the right to pick and choose CONTRACTORS based on ranking.

F. The general concept of debris removal operations includes multiple, scheduled passes of each site, location, or right-of-way. This will allow residents to return to their properties and bring debris to the private and public right-of-way as recovery progresses. The AUTHORITY will prescribe the specific schedule to be used after ascertaining the scope and nature of the disaster's impacts.

G. The AUTHORITY will make every effort to identify strategically located public and private TDMS throughout the county prior to a natural disaster. Depending upon the severity of the natural disaster, additional public and private TDMS will be identified as needed.

H. The CONTRACTOR will operate the public and private TDMS and only CONTRACTOR vehicles and others specifically authorized by the AUTHORITY will be allowed to use the sites. Only one (1) level of subcontractor will be allowed to operate the sites. There will be no multi-tiered subcontractors (sub of a sub) allowed to operate TDMS. The CONTRACTOR is responsible for all activity at TDMS operated by their subcontractor and must have an employee on site at all times to oversee daily operations. **The locations of both publicly and privately owned sites currently under consideration are shown on Attachment C.** Additional public and privately owned TDMS may become available as plans develop. The availability of both private and public TDMS may change during the term of the Agreement.

I. The AUTHORITY may also establish designated homeowner drop-off sites on a public right-a-way (PROW) for communities. The CONTRACTOR will be responsible for removing all eligible debris from those approved designated locations at the direction of the Emergency Management Coordinator or designee.

J. Curbside segregation of debris and disaster-generated or related wastes will be an element of the AUTHORITY'S disaster recovery program. The debris removal and disposal CONTRACTOR will be required to aid in the segregation and waste stream management processes. Any Household Hazardous Waste (HHW) encountered by the debris removal CONTRACTOR is to be set aside. HHW disposal will be the responsibility of the resident. The AUTHORITY will designate HHW drop-off locations.

K. The following items are considered HHW for the purpose of this Agreement:

1. Used Oil
2. Batteries
3. Paint
4. Aerosol spray cans
5. Pesticides
6. Antifreeze
7. Fluorescent light bulbs
8. Propane tanks (household size)

L. The CONTRACTOR will setup a lined containment area and separate any HHW inadvertently delivered to a TDMS.

M. Commercial and industrial hazardous waste such as chemicals, gas containers, transformers, and any other form of hazardous or toxic matter will be set aside for collection and disposal by a Hazardous Materials Removal and Disposal Contractor who will be selected by the AUTHORITY.

N. Putrescible residential garbage will be collected by AUTHORITY franchise waste haulers and is not to be collected or transported by CONTRACTOR forces. The AUTHORITY may enter into a separate emergency debris removal agreements with each franchise hauler to operate their dedicated self-loading collection equipment within their Service Area for FEMA eligible storm debris removal.

2.5 SCOPE OF WORK/OVERVIEW:

This section is divided into three (3) subsections:

2.5.1 Debris Removal and Disposal Operations from residential public and private streets, roads and rights-of-way and delivered to a TDMS designated by the Authority.

2.5.2 TDMS Operations which includes daily operations as well as reclamation of the site to its pre-storm condition or as directed by the AUTHORITY Emergency Management Coordinator

2.5.3 Processing, Loading and Hauling Material from TDMS to final destination.

A. Specific work authorizations by the AUTHORITY will be through written Task Orders. Task Orders will define the job to be accomplished, location of job, timeframe for completion, rates to be used, etc. Any job with requirements or rates not covered by this Proposal will be negotiated. The AUTHORITY reserves the right to extend operations on a weekly basis. Task Orders will be executed bilaterally. Performance will be by the metrics established in the Task Order(s). After 1/3 and again after 2/3 of the stipulated number of days of work in the Task Order have elapsed, the CONTRACTOR(S) shall provide written progress report to the AUTHORITY for review and acceptance. The AUTHORITY shall have the right to correct for CONTRACTOR'S default or underperformance by any means it deems in its best interest at the CONTRACTOR'S expense.

B. The CONTRACTOR shall commence mobilization immediately upon receipt of the mobilization Task Order meeting the following progress patterns: 48 hours- collection activity within assigned Collection Service Area. Within ten (10) calendar days CONTRACTOR shall have 100% of all necessary equipment operating within all Collection Service Areas. This represents a minimum response schedule and does not restrict an earlier response. Subsequently, the AUTHORITY may issue additional Task Orders to define more precisely the work to be accomplished or to authorize additional work. The CONTRACTOR shall perform in accordance with each Task Order in all designated Collection Service Areas established by the AUTHORITY. Each Task Order will be uniquely and sequentially numbered.

C. The CONTRACTOR is authorized to collect debris during daylight hours, seven (7) days per week. Any deviations from this schedule will require AUTHORITY approval.

D. The CONTRACTOR must be duly licensed to perform the work in accordance with the State of Florida statutory requirements. The CONTRACTOR shall obtain all permits necessary to complete the work. The CONTRACTOR shall be responsible for determining what permits are necessary to perform under the Agreement. Copies of all permits shall be submitted to the AUTHORITY's Director, Customer Information Services prior to issuance of the first Task Order.

E. The quantity of work required to complete the Agreement resulted from this RFP is estimated. The actual effort required may be more or less than the estimated amount shown in the Proposal Form 3 – Price Proposal. Payment will be made at the unit rates proposed. The output will be verified by the AUTHORITY's Director, Customer Services in the daily operational report. Should hourly rates be used to pay for certain equipment other than preventative maintenance, not in excess of fifteen (15) minutes in a normal workday, will be paid at the regular hourly rate. Preventative maintenance or down time resulting from equipment failure, routine maintenance and fueling that exceeds fifteen (15) minutes will be considered unacceptable work and non-payment of that time will be rounded off to the half hour of all hours where delays occur. Preventative maintenance is defined as the usual field maintenance to keep equipment in operating condition without the use of extensive shop equipment. Fueling of equipment will be considered as part of preventative maintenance.

F. The CONTRACTOR shall be responsible for correcting any notices of violations issued as a result of the CONTRACTOR'S or any subcontractor's actions or operations during the performance of this Agreement. Corrections for any such violations shall be at no additional cost to the AUTHORITY.

G. The CONTRACTOR shall conduct the work so as not to interfere with the disaster response and recovery activities of federal, state or local governments or agencies, or of any public utilities or other private contractor.

H. The CONTRACTOR shall provide contact information for all key personnel to the AUTHORITY that shall include name, phone number, cellular phone number and email address. The CONTRACTOR and its agents shall respond in a timely manner to all AUTHORITY inquiries at all times.

2.6 DEBRIS REMOVAL AND DISPOSAL OPERATIONS

2.6.1 General:

A. The purpose of this section is to define the requirements for debris removal and disposal operations after any catastrophic disaster within Palm Beach County. The AUTHORITY may designate zones for collection and disposal locations for debris collected. CONTRACTORS will be tasked with a service area(s) for this specific work immediately after the activation of the Agreement.

B. For work performed on a Time and Materials basis, all hourly equipment rates shall include the cost of the maintenance, fuel, repairs, overhead, profit, insurance, and all other costs associated with the equipment including labor and operator.

2.6.2 Services:

A. The CONTRACTOR shall provide equipment, operators, and laborers for debris removal operations. The CONTRACTOR shall provide all labor and materials necessary to fully operate and maintain (including fuel, oil, grease, and repairs) all equipment under this Agreement.

B. All rates are to include the cost of protective clothing (to include hardhats and steel-toed boots), fringe benefits, hand tools, supervision, transportation, lodging, meals, and all other costs.

C. The work shall consist of clearing and removing disaster generated debris as directed by the AUTHORITY Emergency Management Coordinator. CONTRACTOR shall provide collection equipment the day following a natural disaster or as directed by the AUTHORITY and shall provide equipment sufficient to collect a minimum of 50,000 cubic yards of debris per day within ten (10) calendar days of collection commencement (Past AUTHORITY natural disaster cleanup records show that ten (10) days' following disaster, 95,000-126,000 cubic yards of debris collected per day). Failure to provide sufficient equipment necessary to collect required amount may result in the AUTHORITY entering into a separate agreement with another contractor for collection services.

2.6.2.1 Removal of Hazardous Leaning Trees and Hanging Limbs

a) Under this contract, work shall consist of all labor, equipment, fuel, and miscellaneous costs necessary to remove all hazardous trees twelve inches (12") or greater in diameter, measured three feet (3') from the base of the tree or chest height and hanging limbs two inches (2") or greater in diameter existing in private and public right-of-way. Further, debris generated from the removal of hazardous trees and hanging limbs two inches (2") or greater existing in private and public right-of-way will be placed at the public right-of-way for removal as vegetative debris. Hazardous leaning trees less than twelve inches (12") in diameter, measured three feet (3') from the base of the tree or at chest height, will be flush cut, and placed on the public right-of-way to be removed as vegetative debris. The AUTHORITY will not compensate the CONTRACTOR for leaning trees less than twelve inches (12") in diameter on a unit rate basis.

b) Removal and transportation of hazardous trees twelve inches (12") or greater in diameter and hanging limbs two inches (2") or greater in diameter existing in private and public right-of-way will be performed as identified by the AUTHORITY. All disaster specific eligibility guidelines regarding size and diameter of leaning trees will be communicated to the CONTRACTOR, in writing, by the AUTHORITY. In order for leaning or hazardous trees to be removed and eligible for reimbursement, the tree must satisfy a minimum of one (1) of the following requirements:

   i) The tree is leaning in excess of 30° degrees in a direction that poses an immediate threat to public health, welfare, and safety.
   ii) The tree is dead, twisted, or mangled as a direct result of the storm and a certified arborist can attest to the fact that the tree will die and potentially create a falling hazard to the public.

2.6.2.2 Removal of Hazardous Stumps

a) Under this contract, work shall consist of all labor, equipment, fuel, and miscellaneous costs necessary to remove all hazardous uprooted stumps 24 inches or greater in diameter, measured 24 inches from the base of the tree existing in private and public right-of-way. Further, debris generated from the removal of uprooted stumps existing in private and public right-of-way will be placed at the public right-of-way for removal as vegetative debris. Stumps measured 24 inches from the base of the tree and less than 24 inches in diameter will be considered normal vegetative debris and removed in accordance with 3.1.2. The AUTHORITY will not compensate hazardous stumps less than 24 inches in diameter on a unit rate basis and instead will be considered normal vegetative debris. The diameter of stumps less than 24 inches will be converted into a cubic yardage volume based on the published FEMA stump conversion table (In accordance with current FEMA public assistance guidelines) and removed under the terms and conditions of 2.6.2.

b) Removal and transportation of hazardous uprooted stumps existing in the private and public right-of-way and private property will be performed as identified by the AUTHORITY. All disaster specific eligibility guidelines regarding size and diameter of hazardous stumps will be communicated to the CONTRACTOR, in writing, by the AUTHORITY. In order for hazardous stumps to be removed and eligible for reimbursement, the stump must satisfy the following requirement:

(i) Over 50% of the tree crown is damaged or broken and heartwood is exposed.
(ii) Tree stumps that are not attached to the ground will be considered normal vegetative debris and subject to removal under the terms and conditions of 2.1. The cubic yard volume of the unattached stump will be based off of the diameter conversion using the published FEMA stump conversion table (In accordance with current FEMA public assistance guidelines).

The AUTHORITY or its representative will measure and certify all stumps before removal.

2.6.2.3 Collection of Storm Generated Residential Vegetation and Construction and Demolition Debris:

a) It is the AUTHORITY'S goal to ensure that Vegetation and Construction/Demolition debris remain separate task orders for the collection of Vegetation and Construction loads. Mixing of loads by the CONTRACTOR at the road right of way will not be tolerated.

Work may include:

(i) First pass to clear debris from emergency evacuation routes, access roads to critical facilities and all primary roadways.
(ii) Clearing debris from residential private and public road right of ways.
(iii) Loading the debris.
(iv) Hauling the debris to an approved AUTHORITY TDMS or an authorized private construction demolition debris recycling facility or landfill.
(v) Dumping the debris at the TDMS or direct haul to an Authority permitted approved private Construction and Demolition Debris (C&D) recycling facility or Authority authorized landfill.

b) Debris delivered to a TDMS, private C&D recycling facility or authorized landfill will be paid based on the per cubic yard price according to the Proposal Form 3 – Price Proposal.

2.6.2.4 Hourly Rate Clearing:

a) From 0-70 hours following a disaster CONTRACTOR, as designated by the AUTHORITY, shall provide the clearing services on an hourly rate that shall include the following:

(i) Clear debris from emergency evacuation routes, access roads to critical facilities, and primary roadways.
(ii) Perform emergency removal of debris if needed for life-saving measures.
(iii) Conduct daily briefings with debris managers and other officials to update progress and discuss issues.
(iv) Develop a traffic control plan along potential haul routes and at debris management and disposal sites.

b) The CONTRACTOR shall not move from one designated Collection Zone to another area without prior approval from the AUTHORITY's Director, Customer Information Services or designee. CONTRACTORS and/or subcontractors that move to a designated Collection Service Area without prior AUTHORITY approval may be terminated immediately. The AUTHORITY reserves the right to relocate CONTRACTOR to other Collection Service Areas based on need and ability to perform required work at an acceptable level. The AUTHORITY reserves the right to immediately terminate CONTRACTOR and any subcontractor who fails to provide service in strict accordance with guidelines set forth by FEMA and the AUTHORITY.

c) The AUTHORITY or designee shall forward all claims of damage to the CONTRACTOR daily. CONTRACTOR shall provide all contact information, including name, phone number, cellular phone number, fax number and email address, for personnel responsible for resolving all claims of damage. CONTRACTOR must respond to all claims of damage within 24 hours and resolve within ten (10) calendar days. Mailboxes must be repaired or replaced within two (2) calendar days. CONTRACTOR is responsible for all damage caused by his crew and/or subcontractors in the performance of debris removal.

d) In the event the CONTRACTOR fails to repair damages as a result of the Contractor's equipment failure or negligence within the time provided in this Agreement, the AUTHORITY or designee may arrange for the repairs and assess the CONTRACTOR for the cost of the repairs and any applicable administrative charges. Any disputes as to damage responsibility will be presented to the Director, Customer Information Services or designee for review. The decision of the Director, Customer Information Services or designee will be final.

2.6.3 Equipment:

A. All trucks and equipment must be in compliance with all applicable federal, state, and local rules and regulations. Trucks used to haul debris must be capable of rapidly dumping their load without the assistance of other equipment, be equipped with a tailgate that will effectively contain the debris during transport that will permit the trucks

to be filled to capacity. Cyclone fence may be used as temporary tailgates if they comply with the following specifications:

1. Fencing must be permanently attached to one side of the truck bed.
2. After loading, the fencing must be tied to the other side of the truck bed at two places with heavy gauge wire.
3. Fencing must extend to the bottom of the bed.
4. After loading, bottom of fencing shall be tight against the bed of the truck and secured at a minimum of two locations.
5. Solid iron metal bars must be secured to both sides of the fencing.
6. There shall be no hand loaded equipment allowed.

B. The AUTHORITY or designee shall complete certifications indicating the type of vehicle, make and model, license plate number, equipment number, and measured maximum volume, in cubic yards, of the load bed of each piece of equipment utilized to haul debris. The measured volume of each piece of equipment shall be calculated from actual internal physical measurement performed and certified by the CONTRACTOR. Maximum volumes may be rounded up to the nearest cubic yard. The reported measured maximum volume of any load bed shall be the same as shown on the placards affixed to each piece of equipment. The AUTHORITY reserves the right to re-measure trucks and trailers at any time to verify reported capacity. If a truck and/or trailer are re-measured and the yardage capacity is determined to be lower, the lower yardage volume will be retroactive to the initial load and total volume adjusted accordingly.

C. All trucks and trailers utilized in hauling debris shall be equipped with a tailgate that will permit the vehicle to be loaded to capacity and effectively contain the debris on the vehicle while hauling. If installed, all sideboard extensions must remain in place throughout the operation, or the vehicle must be re-measured and remarked. All extensions to the bed are subject to acceptance or rejection at the sole discretion of the AUTHORITY or designee.

D. Trucks or equipment designated for use under this Agreement shall not be used for any other work during working hours. The CONTRACTOR shall not solicit work from private citizens or others to be performed in the designated Collection Service Area during the period of this Agreement. Under no circumstance will the CONTRACTOR mix debris hauled for others with debris hauled under this Agreement. Failure to comply will result in no payment to CONTRACTOR and the operator and vehicle will be declared ineligible to provide any additional emergency debris collection services. Any and all unapproved changes to placard will result in no payment to CONTRACTOR and the operator and vehicle will be declared ineligible to perform any additional emergency debris collection services.

2.6.4 Securing Debris

The CONTRACTOR shall be responsible for properly and adequately securing debris on each piece of equipment utilized to haul debris. Prior to leaving the loading site, the CONTRACTOR shall ensure that each load is secure and trimmed so that no debris extends horizontally beyond the bed of the equipment in any direction. All loose debris shall be reasonably compacted during loading and secured during transport. Tarps or other

coverings shall be provided by the CONTRACTOR to prevent materials from falling or being blown from the bed. Loads not properly tarped or otherwise covered will not be allowed to dispose at any AUTHORITY approved TDMS which may result in non-payment to CONTRACTOR.

2.6.5 Equipment Signage

Prior to commencing operations, the AUTHORITY or designee shall affix to each piece of equipment, signs or markings indicating the Owner Operator's name and a unique equipment identification number. One sign shall be placed on each side of the equipment. For those trucks, trailers and other equipment intended to haul debris, the maximum volume, in cubic yards, of the load bed shall also be shown. Each operator shall keep AUTHORITY certification with them at all times. Placards must remain on both sides of equipment.

2.6.6 Other Considerations

A. The CONTRACTOR shall assign and provide an Operations Manager (OM) to the AUTHORITY TDMS to serve as the principal liaison between the AUTHORITY Director, Customer Services or designee and the CONTRACTOR'S forces. The assigned OM must be knowledgeable of all facets of the CONTRACTOR'S operations and have authority in writing to commit the CONTRACTOR. The OM shall be on call 24 hours per day, seven (7) days per week and shall have electronic linkage capability for transmitting and receiving relevant contractual information and make arrangements for onsite accommodations. This linkage shall provide immediate contact via cell phone, Fax machine, and have Internet capabilities. The OM will participate in daily meetings and disaster exercises, functioning as a source to provide essential element information. The OM will report to the AUTHORITY Director, Customer Services or designee. This position will not require constant presence; rather the OM will be required to be physically capable of responding to the AUTHORITY Emergency Management Coordinator within 30 minutes of notification.

B. The CONTRACTOR shall be responsible for control of pedestrian and vehicular traffic in the work area. At a minimum, one flag person should be posted at each approach to the work area.

C. The CONTRACTOR shall supervise and direct the work, using skilled labor and proper equipment for all tasks. Safety of the CONTRACTOR'S personnel and equipment is the responsibility of the CONTRACTOR. Additionally, the CONTRACTOR shall pay for all materials, personnel, taxes, and fees necessary to perform under the terms of this contract.

D. Payment for debris hauled will be based on the quantity of debris hauled in cubic yards. Debris hauled to a TDMS will require a validated load ticket. Drivers will be given an electronic load tickets at the loading site by an AUTHORITY loading site monitor. The quantity of debris hauled will be estimated in cubic yards at the TDMS by an AUTHORITY TDMS monitor. The estimated quantity will be recorded on the electronic load ticket. The AUTHORITY TDMS monitor will retain one copy of the paper load ticket and the driver will retain the remaining copies of the load ticket. Debris being hauled to

a permanent landfill will be paid based on cubic yards recorded on an approved electronic or paper load ticket. Payment will be made against the CONTRACTOR'S invoice once site monitor and CONTRACTOR load tickets and/or scale tickets match. Load tickets not properly completed and signed will not be paid.

2.7 TEMPORARY DEBRIS MANAGEMENT SITES (TDMS) OPERATIONS

2.7.1 General

A. The purpose of this section is to define the requirements for TDMS Operations after any catastrophic disaster within Palm Beach County.

B. The CONTRACTOR shall use only TDMS designated by the AUTHORITY Emergency Management Coordinator.

C. The TDMS foreman shall direct all vehicular traffic and load drop-off operations. Different types of debris shall be kept in separate piles at the TDMS. At a minimum, one flag person shall be posted at each TDMS for traffic control and to direct unmixed loads to proper location (by debris type) to be offloaded. CONTRACTOR shall be responsible for sorting and proper placement of all loads not dumped in appropriate location which results in mixing the once separated debris at no charge to the AUTHORITY.

D. The CONTRACTOR shall begin grinding vegetative debris within five (5) calendar days of TDMS opening date and removing mulch/wood chips within ten (10) calendar days of site opening date. It is very important your plan provides specific information for the final disposal destination location of the mulch / wood chips removed from the public or private TDMS. The CONTRACTOR shall begin removal of Construction and Demolition/mixed debris from TDMS to an approved final destination within five (5) days of site opening date.

2.7.2 TDMS Services

2.7.2.1 Site Setup/Preparation and Site Closeout/Restoration Site setup/preparation and site closeout/restoration shall be compensated on a time and materials basis in accordance with the hourly rates provided in the Proposal Form 3 – Price Proposal Site set-up/preparation/closeout/restoration includes: clearing, stripping, hauling, fill placement, constructing/deconstructing processing pads, limerock or crushed concrete access roads, seeding, and any other similar activity necessary to make the site usable for its intended purposes and to return the site to its original condition. Do not include any materials in calculating the hourly rates in the Proposal Form 3 - Price Proposal. Important- Phase I TDMS Reclamation is included in the 2.0 cubic yard price. Phase I Reclamation requires the contractor to remove all debris from the TDMS including small particles mixed with soil and grading the entire area. The only site closeout cost will be removal of road base material and seeding as approved by the Authority.

2.7.2.2 TDMS Operations and Material Processing

a. TDMS operations and material processing shall be compensated in accordance with the unit prices provided in the Proposal Form 3 - Price Proposal. The CONTRACTOR shall provide equipment, operators, and laborers for TDMS operations as specified by Task Order. Unit prices provided in the Proposal Form 3 - Price Proposal, shall include all labor and materials necessary to fully operate and maintain (including fuel, oil, grease, repairs, operator, mobilization, demobilization, overhead, profit, lodging and insurance) all equipment under this Agreement. Each Inspection Tower shall be equipped with two (2) portable toilets. Toilets shall be provided immediately upon completion of tower assembly. CONTRACTOR shall provide a water truck for the purpose of applying to site surface to minimize dust. The AUTHORITY shall provide a front-load garbage container and collection service of the container at each TDMS. CONTRACTOR shall be responsible for cleaning up all trash and litter generated on the site from daily operations and depositing into the container for collection. The entrance roadway and surrounding area within ½ mile of the site's entrance shall be cleaned daily by the CONTRACTOR. All pre-storm identified sites shall be opened by the CONTRACTOR within three (3) calendar days after receiving approval from the AUTHORITY to operate the TDMS. Failure to open sites with proper equipment and necessary personnel will result in liquidated damages of $10,000 per day. All rates shall include the cost of protective clothing (to include hardhats and steel-toed boots), fringe benefits, hand tools, supervision, transportation, lodging, meals, and any other costs. The work shall consist of managing the operations of a TDMS and performing debris reduction by air curtain incineration and/or grinding of storm generated debris as directed by the AUTHORITY Emergency Management Coordinator

b. The AUTHORITY plans to use two types of TDMS.

    1. Vegetative TDMS will be devoted to the reduction of clean woody debris by either burning or grinding. The AUTHORITY expects the material to be recycled and or beneficially re-used if processed by grinding. It is important to provide a detailed plan on how this material will be recycled or beneficially reused after grinding / reduction.

    2. Depending upon the size and type of devastation the AUTHORITY may require a separate Construction & Demolition (C&D) staging area, mixed debris staging area and a separate Household Hazardous Waste staging area. The AUTHORITY requests that PROPOSER implements recycling and or reduction programs to minimize the quantity of construction debris material to be land filled.

c. Material coming into the Vegetative or C&D TDMS will be measured and paid for by the cubic yard according to the Proposal Form 3 – Price Proposal. Material removed and transported from a C&D TDMS will be measured and paid by the cubic yard according to the Proposal Form 3 – Price Proposal.

d. Locations of all TDMS will be approved by the AUTHORITY. The AUTHORITY Emergency Management Coordinator must approve site improvements before work begins and any costs, other than those in the Proposal Form 3 – Price Proposal, that might have been negotiated under a Task Order shall be documented for payment.

e. Material processed at a TDMS by either grinding or burning will be measured using cubic yards from incoming load tickets. Material entering a TDMS will be deposited in manageable piles.

2.7.3 Reporting

The CONTRACTOR shall submit a report to the AUTHORITY Emergency Management Coordinator or designee by close of business each day of the term of the Task Order. Each report shall contain, at a minimum, the following information:

1. Contractor's Name
2. Contract Number
3. Daily and cumulative hours for each piece of equipment, *if appropriate*
4. Daily and cumulative hours for personnel, by position, *if appropriate*
5. Volumes of debris handled

Failure to provide audit quality information by 5:00 p.m. of the following day of operation will subject CONTRACTOR to non-payment in each instance at the sole discretion of the AUTHORITY.

2.7.4 Other Considerations

A. The CONTRACTOR shall supervise and direct the work, using skilled labor and proper equipment for all tasks. Safety of the Contractor's personnel and equipment is the responsibility of the CONTRACTOR. Additionally, the CONTRACTOR shall pay for all materials, personnel, taxes, and fees necessary to perform under the terms of this contract.

B. The CONTRACTOR shall be responsible for control of pedestrian and vehicular traffic in the work area. In the event a TDMS must be closed due to CONTRACTOR equipment or operational failures, CONTRACTOR shall be liable for liquidated damages in the amount of $25,000.00 per day for every day the site has to remain closed.

2.7.5 Debris Clearance (for access) from Right-of-Ways and Public Property

A. The AUTHORITY provides support to Palm Beach County Government for Debris Management, including the clearance (moving debris from the middle of the road, etc.) of debris from right-of- ways and public property. Palm Beach County intends to perform debris clearance for access with its own forces or under existing contractual Agreements between the County and local firms. However, in a significant disaster, these resources may be insufficient to perform the clearance activities in a timely manner.

B. This debris clearance is to be considered supplemental and optional service. It is anticipated that debris clearance activities would be conducted, if needed, on a time and material basis using the rates in the Proposal Form 3 – Price Proposal.

2.8 PROCESSING, LOADING AND HAULING MATERIAL:

CONTRACTOR shall provide all necessary labor, material and equipment to process, load and haul wood chips from TDMS in Palm Beach County to final destination for disposal. CONTRACTOR shall provide all necessary labor, material and equipment to load and haul construction and demolition debris and/or mixed debris from TDMS as directed by the AUTHORITY. The AUTHORITY reserves the right to contract with other firms to process, load and haul wood chips and construction and/or mixed debris to a final destination as may best meet the needs of the AUTHORITY. All wood chips, construction and/or mixed debris shall be disposed of in accordance with all Local, State of Florida and Federal guidelines.

CONTRACTOR will provide detailed listing to the AUTHORITY of the following:

1. Quantity (loads and cubic yards)
2. Owner information
3. Site where mulch / reduced yard waste material generated at TDMS is disposed, to include address/GPS location.
4. AUTHORITY will determine final private or public Construction/Demolition debris disposal/recycling facility.

2.9 MISCELLANEOUS REQUIREMENTS

2.9.1 TDMS Foreman

A. The TDMS foreman must be an employee of the CONTRACTOR and is responsible for management of all operations of the site to include, traffic control, dumping operations, segregation of debris, burning, grinding, and safety.

B. The TDMS foreman will be responsible for monitoring and documenting equipment and labor time and providing the daily operational report to the AUTHORITY Director, Customer Services or designee.

2.9.2 TDMS Night Foreman

A. The TDMS night foreman must be an employee of the CONTRACTOR and is responsible for managing all night operations approved by the AUTHORITY.

B. The TDMS night foreman will be responsible for monitoring and documenting equipment and labor time and providing the daily operational report to the AUTHORITY Director, Customer Information Services or designee.

2.9.3 TDMS Management Plan

A. Once the TDMS is identified by the AUTHORITY, the CONTRACTOR will provide a Site Management Plan.

B. Three (3) copies of the plan are required. The plan shall be drawn to a scale of 1" = 50' and address the following functions:

1. Access to site
2. Site preparation -clearing, erosion control, and grading
3. Traffic control procedures
4. Safety
5. Segregation of debris
6. Location of ash disposal area, hazardous material containment area, CONTRACTOR work area, and inspection tower
7. Location of incineration operations, grinding operation (if required). Burning operations require a 100-foot clearance from the stockpile and a 1000-foot clearance from structures.
8. Specific plan including and location for the final disposal destination of the mulch/wood chips generated at the public or private TDMS.

2.9.4 Inspection Tower

The CONTRACTOR shall construct an inspection tower at each TDMS within three (3) calendar days of natural disaster. The tower shall be constructed using pressure treated wood or steel scaffold. The floor elevation of the tower shall be 10-feet above the existing ground elevation. The floor area shall be a minimum 8' by 8', constructed of 2"x 8" joists, 16" O.C. with 3/4" plywood supported by a minimum of four 6" x 6" posts. A 4-foot high wall constructed of 2" x 4" studs and ½" plywood shall protect the perimeter of the floor area. The floor area shall be covered with a roof. The roof shall provide a minimum of 6'-6" of headroom below the support beams. Steps with a handrail shall provide access to the tower. Inspection towers must provide a dry area for employees and meet all FEMA and OSHA requirements.

2.9.5 Grinding Operation

The CONTRACTOR shall have grinder(s) on site and in operation within five (5) calendar days following a natural disaster. Failure to provide sufficient grinding capacity to accommodate expected incoming volumes and allow site to operate in an efficient manner within five (5) calendar days shall result in liquidated damages of $10,000 per day. There shall be no period longer than 24 hours in which grinding activity may stop due to equipment or operational failure. Failure to provide back-up equipment within 24 hours shall result in liquidated damages of $2,000 per hour per approved hours of grinding operation per day until grinding activity resumes.

2.9.6 Household Hazardous Waste Containment Area

The CONTRACTOR shall construct a hazardous material containment area at each TDMS. The area shall be 30' x 30'. The perimeter shall be lined with hay bales and staked in place. The area shall be lined with a heavy gage plastic to provide a waterproof barrier. Additional plastic sufficient to cover the area is required to prevent rain from entering the containment area. Site run-off must be redirected from the containment area by site grading.

2.10 PERFORMANCE OF CONTRACTOR

A. It is the intent of this Agreement to ensure that the CONTRACTOR provides a timely quality level of services. To this end, all complaints received by the Emergency Management Coordinator or designee and reported to the CONTRACTOR shall be promptly resolved pursuant to the provisions of this Agreement.

B. The Emergency Management Coordinator or designee may levy administrative charges for the following infractions:

1. Failure to open pre-storm identified sites within three (3) calendar days of after being tasked by the AUTHORITY liquidated damages of $10,000 per day for each day not opened.
2. Closure of TDMS due to CONTRACTOR equipment or operational failures liquidated damages of $25,000 per day, for each day site must remain closed.

C. Failure to provide back-up grinder(s) within 24 hours of equipment breakdown liquidated damages of $2,000 per hour per approved grinding hours of operation per day.

D. CONTRACTOR may also be subject to non-payment and liquidated damages of $200 for each occurrence of the following infractions:

1. Failure to provide audit quality information by 5:00 p.m. of the following day of operation.
2. Loads not properly tarped or otherwise covered.
3. Mixing debris hauled from other sources with debris hauled under this Agreement.
4. Mixing vegetation debris with C & D material.

E. CONTRACTOR may be immediately terminated and not paid for the following:

1. Collection of any non-eligible, non-AUTHORITY approved stumps or debris.
2. Moving to another designated Collection Service Area without prior AUTHORITY approval.
3. Failure to provide service in accordance with guidelines set forth by FEMA and the AUTHORITY.
4. Soliciting work from private citizens or others to be performed in the designated Collection Service Area during the period of this Agreement.
5. Alteration of placards placed on certified trucks and/or trailers.

Any disputes regarding Performance of Contractor will be presented to the Emergency Management Coordinator or designee for review. The Emergency Management Coordinator or designee shall complete review and make determination within three (3) calendar days. Decisions of the Emergency Management Coordinator or designee shall be final.

REMAINDER OF PAGE LEFT BLANK INTENTIONALLY

PART III
PROPOSAL SUBMISSION REQUIREMENTS

3.1 PROPOSAL SUBMISSION REQUIREMENTS AND FORMAT

A. The AUTHORITY uses Negometrix, a 100% digital method of accessing and responding to solicitations. Therefore, PROPOSERS must submit their proposals via Negometrix. The AUTHORITY must receive all Proposals no later than **2:00 P.M.**, Eastern Time on the date established in *Part I, Section 5 – Procurement Schedule*. The complete Proposal package shall be submitted through Negometrix. Should the PROPOSER have any issues with any interaction with the e-Procurement system, PROPOSER is encouraged to contact the Negometrix support desk for assistance as follows: https://support-us.negometrix.com/support/solutions/articles/44000141067-negometrix-supplier-guide.

B. Marketing brochures or any other information not pertaining to this RFP shall not be included in the Proposal.

C. Proposals should demonstrate that the PROPOSER is qualified to perform the Scope of Work based upon relevant professional experience.

3.2 CONTENT:

The PROPOSER shall provide the appropriate information in accordance with the content requirements set forth in the following subsections. To allow the Evaluation Committee to more effectively review the Proposals, PROPOSERS shall provide all requested information in the order and in the format requested below.

3.2.1 Title Page

The Title Page shall include the RFP Title and Number. The page shall indicate clearly the name of the PROPOSER submitting the Proposal and the name, address, phone number, fax number and e-mail address of the PROPOSER'S designated contact person. The PROPOSER'S designated contact person is the individual who shall be the main point of contact for the AUTHORITY to communicate with regarding this procurement.

3.2.2 Table of Contents

3.2.3 General Information

PROPOSER shall provide completed Proposal Forms 1 – 7 as follows:

3.2.3.1 *Proposal Form 1 – Transmittal Letter*

PROPOSER shall submit a completed Proposal Form 1 – Transmittal Letter acknowledging, among other things, that the PROPOSER has completely reviewed, understands, and agrees to be bound by the requirements of this RFP. The Proposal Transmittal Letter shall be signed by a representative of the PROPOSER who is empowered to sign it and to commit the PROPOSER to the obligations contained in the Proposal.

3.2.3.2 *Proposal Form 2 – Proposal Bond*

PROPOSER shall submit a completed Proposal Form 2 – Proposal Bond as described in *Part I, Section 11 - Bond Requirements*.

3.2.3.3 *Proposal Form 3 –Price Proposal*

A. PROPOSER shall submit a completed Proposal Form 3 – Price Proposal. PROPOSER is required to submit prices for Part A, Part B, and Part C. However, Part A will be utilized for evaluation of the Price Proposal scoring of the RFP. Therefore, unit prices for all Items 1 through 6 in Part A must be submitted. No minimum or maximum amount of work is being promised.

B. The AUTHORITY may request explanations for any out-of-balance pricing, explanations for any pricing it deems too low or too high, and to negotiate a best and final price with the best ranked PROPOSER(S). In addition, the AUTHORITY reserves the right to request additional pricing, negotiated by hourly rate, lump sum, or not-to-exceed amount to perform services other than lobbying.

3.2.3.4 *Proposal Form 4 – Non-Collusion Affidavit*

PROPOSER shall provide a completed Proposal Form 4 – Non-Collusive Affidavit as described in *Part I, Section 13 – Non-Collusion Affidavit*.

3.2.3.5 *Proposal Form 5 – Drug-Free Workplace*

PROPOSER shall provide a completed Proposal Form 5 – Drug-Free Workplace.

3.2.3.6 *Proposal Form 6 – PROPOSER'S Qualification Statement*

PROPOSER shall provide a completed Proposal Form 6 – Proposer's Qualification Statement.

3.2.3.7 *Proposal Form 7 – Scrutinized List Certification*

PROPOSER shall provide a completed Proposal Form 7 – Scrutinized List Certification.

3.2.4 Minimum Requirements

The PROPOSER shall substantiate in its submittal that it meets or exceeds the following minimum requirements. Failure to do so may be cause for disqualification of its submittal:

A. The PROPOSER, both corporate and individual, must be fully licensed and certified for the type of work to be performed in the **State of Florida** at the time of submittal of their response to the RFP. Should the PROPOSER not be fully licensed and certified, its submittal will be rejected;

B. PROPOSER must be engaged in providing the services as outlined in this RFP;

C. PROPOSER must have a demonstrated comprehensive understanding in areas listed in this RFP. Understanding and previous experience are essential criteria in the qualifying process;

D. PROPOSER'S personnel and management to be utilized for the services described in this RFP shall be knowledgeable in their areas of expertise. The AUTHORITY reserves the right to perform investigations as may be deemed necessary to insure that competent persons will be utilized in the performance of the contract.

E. PROPOSER shall provide evidence of current levels of insurance as stipulated in the sample Agreement of this RFP.

3.2.5 Experience and Qualifications Narrative

PROPOSER shall demonstrate the following:

A. Provide a comprehensive description of all mobilizations (minimum of three) performed as a prime contractor for disaster debris services collecting and processing a minimum of 1 million cubic yards of debris collected from public right of ways. PROPOSERS unable to identify three or more mobilizations meeting the 1 million cubic yard threshold, per each mobilization, are requested to submit all relevant experience they have that documents the ability to perform the services (right of way collection and TDMS management) as requested by this RFP. No limitation exists for the period of time a PROPOSER may go back to describe the experience as requested. Do not show work performed as a sub-contractor. **(PROPOSAL FORM 6 - FORM A)**

   For each mobilization the PROPOSER is requested to identify the following:

   - Name and type of storm event
   - Date and location
   - Narrative of disaster debris services of work performed during mobilization event
   - Total value of contract for services performed
   - Number of cubic yards of debris collected by PROPOSER from public right of ways during mobilization
   - Number of cubic yards of debris handled by PROPOSER at TDMS during mobilization
   - Name, address, and telephone number of customers point of contact for reference purposes.

B. List all emergency debris removal and disposal contracts performed in the last three (3) years as a prime contractor. **(PROPOSAL FORM 6 - FORM B)**

3.2.6 General Operations Plan

PROPOSER shall provide the following:

1. At a minimum a detailed Mulch Disposal Plan. The AUTHORITY is committed to recycling and or beneficial re-use of mulch. Additional consideration will be taken for Beneficial Re-Use Plan. PROPOSER is required to provide a full description of how PROPOSER intends to dispose and or re-use one million (1,000,000) cubic yards of mulch. PROPOSER is required to address how PROPOSER intends to comply with all federal, state, and local guidelines pertaining to mulch disposal. PROPOSER is also required to submit any agreement(s) he/she currently has for the disposal and or beneficial re-use of mulch. PROPOSER is required to give a full description of their end use plan.

2. At a minimum a detailed TMDS Plan pertaining to Construction Debris (C & D) Recycling and or Reduction for estimated five hundred thousand (500,000) cubic yards. The AUTHORITY requests that PROPOSER implements a recycling and/or reduction program for C & D material to minimize amount of debris that will go to a landfill. PROPOSER is requested to address programs they will implement to facilitate recycling and or reduction of construction debris waste.

3. Resumes for the PROPOSER'S management team and all key personnel who will be assigned to the agreement to include, among other things: names, job titles, responsibilities, and applicable debris management experience.

4. Provide private TDMS available for use in Palm Beach County or close proximity. Provide letters of agreements with the owners for use of such sites. Identify the location of the sites and site

configuration. Five (5) additional points will be provided if PROPOSER submits additional private TDMS.

5. Provide description of other emergency services performed, e.g.: shelter, generators, roofing, communications, food, ice, etc.

3.2.7 Cost (Proposal Form 3):

A. The pricing structure submitted in Proposal Form 3 – Price Proposal shall be firm. However, the AUTHORITY reserves the right to negotiate a "best and final" price for each task category with the highest ranked PROPOSER(S).

B. Price Proposal will include be evaluated based on Proposal Form 3 – Part A – Volume Based Pricing for 3,000,000 Cubic Yards (CY) Debris Disaster. Proposer must provide price for all line **Item 1 through Item 6**. Failure to do so may render your Proposal as non-responsive.

C. PROPOSER is also required to submit pricing for Part B – Hourly Rates and Part C – Unit Cost Schedule as well, even though these sections will not be used to evaluate the Price Proposal of the RFP.

3.2.8 Small/Minority/Women Business Enterprise (S/M/WBE) Participation

A. The Governing Board of the AUTHORITY has implemented the Economic Inclusion Policy and Procedures administered by the Equal Business Opportunity (EBO) Program Office to ensure that all segments of its business population, including, but not limited to small, local, minority, and women-owned businesses, have an equitable opportunity to participate in the AUTHORITY'S procurement process. Refer to Section 6 of the AUTHORITY's Purchasing Manual. Small Business Enterprise (SBE) and Minority/Women Business Enterprise (M/WBE) is hereby mentioned as ("S/M/WBE") in the RFP. The PROPOSER also agrees that by submitting its response to this RFP that it constitutes an acknowledgement that it has reviewed this Section of the AUTHORITY's Purchasing Manual.

B. In accordance with Section 6.1 through 6.4 of the Purchasing Manual, Economic Inclusion Policy and Procedures, the AUTHORITY's Equal Business Opportunity (EBO) Office **has NOT applied an Affirmative Procurement Initiative (API) to this procurement. Therefore, no local S/M/WBE participation is required by this solicitation.**

C. The AUTHORITY does however encourage vendors to include Small/Minority/Women Business Enterprises (S/M/WBE) participation, whenever possible. For information on the Economic Inclusion Policy and Procedures, please contact the EBO Office at 561-640-4000 or visit www.swa.org/EBO.

3.2.9 PROPOSER'S Qualification Statement – (Proposal Form 6)

3.2.10 Scrutinized Business Certification – (Proposal Form 7)

PART IV
PROPOSAL EVALUATION AND AWARD

4.1. GENERAL:

All Proposals submitted in response to this RFP will be evaluated by the AUTHORITY'S Evaluation Committee based on the information supplied per *Part III – Proposal Submission Requirements* and utilizing criteria specified in *Part IV – Proposal Evaluation and Award*.

4.2. EVALUATION CRITERIA:

The review and analysis of the Proposals by the /Evaluation Committee will be based on the following criteria:

- Submission of a complete package including all Forms
- Experience and Qualifications
- General Operations Plan
- Price Proposal

4.3. EVALUATION METHOD:

A. Evaluation Committee members will conduct a completeness review of the Proposals. Proposals must include all requirements specified in *Part III – Proposal Submission Requirements.* Minor informalities or irregularities may be waived by the AUTHORITY. Those Proposals found to be complete, will then be ranked by individual members. At its discretion the AUTHORITY may require any PROPOSER(S) to make an oral presentation of his/her submittal. An oral presentation provides an opportunity for the PROPOSER(S) to clarify his/her submittal for the AUTHORITY. The AUTHORITY, if deemed necessary, will notify the PROPOSER(S) that an oral presentation will be scheduled which may result in a re-evaluation of proposals.

B. *Table 2 – Evaluation Criteria and Points* provide guidelines for the Evaluation Committee members for the ranking of Proposals. In each category where points are to be assigned by individual Evaluation Committee members, PROPOSERS may receive up to the maximum allowable number of points for each category. When awarding points to a proposal, the Evaluation Committee members will be encouraged to use the entire range of awardable points in each category. The total points awarded by each Evaluation Committee member to each Proposal will be tallied and ranked. The proposal with the most points will be ranked a 1; the proposal with the second most points will be ranked a 2; the proposal with the third most points will be ranked a 3, and so forth until each proposal has been awarded points and ranked accordingly. The Proposal with the lowest number 1 rankings will be ranked first overall and recommended for award of the Contract. The Evaluation Committee members will continue in this manner and provide overall rankings to each proposal until all proposals have been given an overall ranking. No points will be awarded for use of local S/M/WBE or S/M/WBE's. The use of these firms is encouraged strictly on a voluntary basis and will not be an evaluative factor in the award of the final Contract awarded pursuant to this solicitation.

Table 2 - Evaluation Criteria and Points

EVALUATION CRITERIA	POINTS
Experience and Qualifications	40[1]
General Operations Plan	40[2]
Price Proposal	20[3]
TOTAL:	**100**

Points footnotes as follows:

1. PROPOSER will receive up to 40 points if PROPOSER submits and exceeds the minimum requirements listed in *PART III, Section 3.2.5 - Experience and Qualifications Narrative and also demonstrate applicable recent experience.* Points will be deducted if these requirements are not met.

2. PROPOSER will receive up to 40 points if PROPOSER submits and exceeds the minimum requirements listed in *Part III, Section 3.2.6 – General Operations Plan*. Points will be deducted if any of these requirements are not met.

3. PROPOSER who submits the Proposal with the lowest Total Proposal Price will receive 20 points. *See example below.*

Total Proposal Price	Percentage of Available Points	Total Points
$35,000,000.00	100%	20.00
$36,000,000.00	97%	19.44
$37,000,000.00	95%	18.92
$38,000,000.00	92%	18.42
$39,000,000.00	90%	17.95
$40,000,000.00	88%	17.50
$41,000,000.00	85%	17.07
$42,000,000.00	83%	16.67
$43,000,000.00	81%	16.28
$44,000,000.00	80%	16.36
$45,000,000.00	78%	15.56

Percentage of Available Points: Lowest Submittal = 100% of Available Points
Calculation for next lowest, etc.= (Lowest Submittal/Next Lowest Submittal) x 20

4.4. AWARD:

A. The AUTHORITY anticipates, but does not guarantee, award to the PROPOSER who submits the Proposal determined by the SWA Board to be the most advantageous. The AUTHORITY anticipates awarding to the four (4) highest ranked PROPOSERS but reserves the right to award more or few Agreements if it is in the best interest of the AUTHORITY.

B. The AUTHORITY intends to enter into the Agreement negotiations with the highest ranked PROPOSER. If the AUTHORITY and the best ranked PROPOSER cannot negotiate a successful Agreement, the AUTHORITY may terminate such negotiations and begin negotiations with the next best ranked PROPOSER. No PROPOSER shall have any rights against the AUTHORITY arising from such negotiations.

C. Agreements awarded will be based on the final ranking achieved during the selection process. The number of Agreements that are activated will be based on the magnitude and complexity of the AUTHORITY'S post disaster needs. It will be in the AUTHORITY'S sole discretion how many Agreements are activated.

D. The price structure submitted in the Proposals shall be firm. However, the AUTHORITY reserves the right to negotiate a "best and final" price with the best ranked PROPOSER.

E. The Agreements will be for a term of three (3) years with option to extend for three (3) additional years under the same terms and conditions. The selected PROPOSERS will standby for much of the duration of the three (3) years and optional additional three (3) years extension, and only be called to active duty when a debris generating event occurs. This call to active duty may be repeated several times within the three (3) year and optional three (3) years extension Agreement period depending on the number of separate debris events that occur.

F. The PROPOSER understands that this RFP does not constitute an agreement or a contract with the PROPOSER. An official agreement or contract is not binding until Proposals are reviewed and accepted and a contract is awarded by the SWA Board and executed by the parties. A Sample Agreement is attached to this RFP. The AUTHORITY anticipates that the final agreement will be in substantial conformance with the Sample Agreement; nevertheless, PROPOSERS are advised that any agreement, which may result from this RFP, may deviate from the Sample Agreement.

REMAINDER OF PAGE INTENTIONALLY LEFT BLANK

PART V
PROPOSAL FORMS

The following Proposal Forms are included:

Proposal Form 1 – Transmittal Letter

Proposal Form 2 - Proposal Bond

Proposal Form 3 – Price Proposal

Proposal Form 4 – Non-Collusion Affidavit

Proposal Form 5 – Drug-Free Workplace

Proposal Form 6 – PROPOSER'S Qualification Statement – with **FORM A** and **FORM B**

Proposal Form 7 – Scrutinized List Certification

REMAINDER OF PAGE INTENTIONALLY LEFT BLANK

PROPOSAL FORM 1 – TRANSMITTAL LETTER

(To be typed on PROPOSER'S Letterhead)

[Date]

Diane LeRay CPPO, CPPB
Procurement Manager, Purchasing Services
Solid Waste Authority of Palm Beach County
7501 North Jog Road
West Palm Beach, FL 33412

Dear Ms. LeRay:

_____ (PROPOSER) hereby submits its Proposal in response to the **Request for Proposal (RFP) No.: 22-201/DL for HURRICANE/DISASTER DEBRIS REMOVAL, REDUCTION AND DISPOSAL** issued by the Solid Waste Authority of Palm Beach County (AUTHORITY) in January 2022.

As a duly authorized representative of the PROPOSER, I hereby certify, represent and warrant, on behalf of the PROPOSER team, as follows in connection with the Proposal:

1. The PROPOSER acknowledges receipt of the RFP and the following Addenda:

No.	Date
_____	_____
_____	_____

2. The submittal of the Proposal has been duly authorized by, and in all respects is binding upon, the PROPOSER.

3. All information and statements contained in the Proposal are current, correct and complete, and are made with full knowledge that the AUTHORITY will rely on such information and statements in qualifying PROPOSER.

4. The PROPOSER certifies under penalties of perjury that the RFP has been prepared and is submitted in good faith without collusion, fraud or any other action with any other person taken in restraint of free and open competition for the services contemplated by the RFP. As used in this Proposal Form, the word "person" shall mean any natural person, business, partnership, corporation, union, committee, club, or other organization, entity, or group of individuals.

5. The PROPOSER is not currently suspended or debarred from doing business with any governmental entity.

6. The PROPOSER has reviewed all of the engagements and pending engagements of the PROPOSER, and no potential exists for any conflict of interest or unfair advantage.

7. No person or selling agency has been employed or retained to solicit the award of the Agreement under an arrangement for a commission, percentage, brokerage or contingency fee or on any other success fee basis, except bona fide employees of the PROPOSER.

8. The principal contact person who will serve as the interface between the AUTHORITY and the PROPOSER for all communications is:

Name: _____

Title: _____

Mailing Address: _____

Phone: _____

Fax: _____

E-mail: _____

The PROPOSER has carefully examined all documents constituting the RFP and the addenda thereto and, being familiar with the work and the conditions affecting the work contemplated by the RFP and such addenda, offers to furnish all labor, materials, supplies, equipment, facilities and services which are necessary, proper or incidental to carry out such work as required by and in strict accordance with this RFP and the Proposal.

_____
Name of Proposer

_____
Print Name of Designated Signatory

_____
Signature

_____
Title

State of _____

County of _____

On this _____ day of _____, 20____, before me appeared _____ personally known to me to be the person described in and who executed this _____ and acknowledged that (she/he) signed the same freely and voluntarily for the uses and purposes therein described.

In witness thereof, I have hereunto set my hand and affixed my official seal the day and year last written above.

_____
Signature

Notary Public in and for the State of _____

(Affix Seal here)

_____
(Name printed)

Residing at _____

My commission expires _____

ACKNOWLEDGMENT OF CONTRACTOR, IF A PARTNERSHIP

State of _____

SS:

County of _____

On this _____ day of _____, 20_____, before me personally came and appeared _____, to me known, and known to me to be one of the members of the firm of _____ described in and who executed the foregoing instrument and he/she acknowledged to me that he/she executed the same as and for the act and deed of said firm.

_____
Notary Public
(Seal)

ACKNOWLEDGMENT OF CONTRACTOR, IF AN INDIVIDUAL

State of _____

SS:

County of _____

On this _____ day of _____, 20_____, before me personally came and appeared _____, to me known, and known to me to be the person described in and who executed the foregoing instrument and acknowledged that he/she executed the same.

_____
Notary Public
(Seal)

PROPOSAL FORM 2 – PROPOSAL BOND

KNOW ALL MEN BY THESE PRESENTS, that we, the undersigned:

_____, as Principal and
(Name of Proposer)

_____, as Surety, are
(Name of Surety)

hereby held and firmly bound unto the Solid Waste Authority of Palm Beach County, West Palm Beach, Florida, as Obligee, in the sum of:

_____

_____ Dollars ($_____) / **5% of the Performance and Payment Bond, which is in the amount of $10,000,000,** as liquidated damages for payment of which, well and truly to be made, we hereby jointly and severally bind ourselves, our heirs, executors, administrators, successors, and assigns.

The condition of this obligation is such that whereas the Principal has submitted to the Solid Waste Authority of Palm Beach County a certain Proposal attached hereto and made a part hereof, to enter into an Agreement, hereinafter referenced to as the **AGREEMENT FOR HURRICANE/DISASTER DEBRIS REMOVAL, REDUCTION, AND DISPOSAL.**

NOW THEREFORE,

a. If said Proposal shall be rejected or withdrawn as provided in the Request for Proposal or, in the alternative,

b. If said Proposal shall be accepted and the Principal shall duly execute and deliver the Agreement attached hereto and shall furnish all insurance requirements, the specified Performance and Payment Bond for the faithful performance of the Agreement and for the payment of labor and materials furnished for the performance of the Agreement,

then this obligation shall be void, otherwise it shall remain in full force and effect, it being expressly understood and agreed that the liability of the Surety for any and all claims hereunder in no event shall exceed the amount of this obligation.

The Surety, for value received, hereby agrees that the obligations of said Surety and its bond shall be in no way impaired or affected by any extensions of the time within which such Proposal may be accepted and said Surety does hereby waive notice of any such extensions.

IN WITNESS WHEREOF, the parties hereto have duly executed this bond on the _____ day of _____, 20____.

PRINCIPAL: _____

By: _____
Signature

(Seal)

WITNESS:

1. _____

2. _____

Name: _____

Title: _____

Address: _____

_____

Telephone: _____

SURETY: _____

By: _____
Signature

(Seal)

WITNESS:

1. _____

2. _____

Name: _____

Title: _____

Address: _____

_____

Telephone: _____

Surety companies executing bonds **must** appear on the Treasury Department's most current list (Circular 570 as amended) and be authorized to transact business in the State of Florida, in accordance with Florida Statute 287.0935, and be approved by the Solid Waste Authority of Palm Beach County.

PROPOSAL FORM 3 – PRICE PROPOSAL

PART A – VOLUME BASED PRICING FOR 3,000,000 CUBIC YARD (CY) DEBRIS DISASTER

ITEM/DESCRIPTION	ESTIMATED QUANTITY	UNIT	PRICE PER CY	EXTENSION
1.0 Public Property and Right of Way Collection, Loading and Hauling to a designated TDMS.				
A. Vegetation	2,500,000	CY		
B. Construction Debris / Mixed Debris	500,000	CY		
2.0 TDMS operation to include placement of monitoring towers, portable toilets, keeping on-site and adjacent roads area clean of trash and garbage, debris acceptance, pile management, and Phase I Reclamation.	3,000,000	CY		
3.0 Processing of debris through grinding and/or chipping.	2,500,000	CY		
4.0 Loading, hauling and disposing wood chips to final destination. ***(This rate includes disposal cost)***	1,000,000	CY		
5.0 Volume reduction through air curtain incineration.	2,500,000	CY		
6.0 Loading and hauling of construction debris and/or mixed debris from TDMS to a permitted C&D recycling facility or any other designated Disposal Facility. ***(This rate <u>shall not</u> include disposal cost). Based on miles from TDMS to final destination– 1 way.***				
A. 0 ≤ 20 miles	500,000	CY		
B. > 20 ≤ 50 miles	500,000	CY		
C. > 50 ≤ 100 miles	500,000	CY		
AVERAGE: (Item 6.0 A-C)				
AVERAGE: (Item 6.0 A-C) **X 500,000** CY **=**				$
TOTAL PROPOSAL PRICE: (Items 1.0 - 4.0; 6.0)				$

PROPOSER MUST PROVIDE PRICE FOR ALL LINE ITEMS 1 THRU 6. FAILURE TO DO SO MAY RENDER YOUR PROPOSAL TO BE DEEMED NON-RESPONSIVE.

Unit Prices, unless otherwise indicated, shall include all labor (operators, laborers, supervisors) and materials including but not limited to: supplies, equipment maintenance, repairs, repair parts, fuels, lubricants, cellular phones, transportation, and housing, if required, necessary to accomplish the project. The quantities and distributions are estimated for the purpose of making an award. Locations of sites, debris quantities, destinations, material densities, etc. may differ substantially in an actual disaster.

Assumptions: 3,000,000 cubic yards of debris consisting of 2,500,000 cubic yards of vegetation debris and 500,000 cubic yards of mixed debris.

PROPOSAL FORM 3 – PRICE PROPOSAL

PART B – HOURLY RATES

TDMS SET-UP AND CLOSURE AND DEBRIS CLEARANCE FOR ACCESS - OPTIONAL USE BY COUNTY AND OTHER GOVERNMENTAL ENTITIES			
EQUIPMENT AND LABOR RATES			
EQUIPMENT TYPE	**HOURLY EQUIPMENT RATE**	**HOURLY LABOR RATE**	**TOTAL HOURLY RATE**
Bobcat Loader			
Crew Foreman w/ Cell Phone and Pickup			
Dozer, Tracked, D5 or similar			
Dozer, Tracked, D6 or similar			
Dozer, Tracked, D7 or similar			
Dozer, Tracked, D8 or similar			
Dump Truck, 18 CY-20 CY			
Dump Truck, 21CY-30 CY			
Generator and Lighting			
Grader w/ 12' Blade			
Hydraulic Excavator, 1.5 CY			
Hydraulic Excavator, 2.5 CY			
Knuckleboom Loader			
Laborer w/ Chain Saw			
Laborer w/ small tools, traffic control, flag person			
Lowboy Trailer w/ Tractor			
Operations Manager w/ Cell Phone and Pickup			
Pickup Truck, .5 Ton			
Soil Compactor 81 HP+			
Soil Compactor to 80 HP			
Soil Compactor, Towed Unit			
Truck, Flatbed			
Tub Grinder, 800 to 1,000 HP			
Water Truck			
Wheel Loader, 2.5 CY, 950 or similar			
Wheel Loader, 3.5-4.0 CY, 966 or similar			
Wheel Loader, 4.5 CY, 980 or similar			
Wheel Loader-Backhoe, 1.0-1.5 CY			
Other – Please List			

Attach additional sheet with equipment type and labor rates, if needed

PROPOSAL FORM 3 – PRICE PROPOSAL

PART C – UNIT COST SCHEDULE

ITEM	HAZARDOUS STUMP REMOVAL, HAULING, AND DISPOSAL	UNIT	UNIT COST
1.	24-inch diameter to 48.99-inch diameter	Stump	
2.	49-inch diameter and greater	Stump	
3.	Stump Fill Dirt – Fill dirt for stump holes after removal	CY	
	HAZARDOUS HANGING LIMBS (HANGERS), AND HAULING To include removal of all hanging limbs. Limbs to be cut and placed on the right of way for collection as vegetative debris.		
4.	2-inch diameter and greater	Tree	
	HAZARDOUS TREE REMOVAL, AND HAULING Trees to be flush cut at ground level and placed on the right of way for removal as vegetative debris.		
5.	6-inch diameter to 12.99-inch diameter	Tree	
6.	13-inch diameter to 24.99-inch diameter	Tree	
7.	25-inch diameter to 48.99-inch diameter	Tree	
8.	49-inch diameter and greater	Tree	

NOTE:
The following is information only and will NOT be considered in the evaluation of this RFP

The AUTHORITY reserves the right to use this contract to handle small quantities of debris removal and as support for our Franchise Contracts as needed. Below is a daily rate to remove debris. The AUTHORITY will pay for the disposal cost. There is no requirement to provide a rate, however if you do, we expect your company to honor this special service and respond within 48 hours at the rate below.

COLLECTION SERVICE ONLY	
EQUIPMENT	DAILY RATE (10 HRS/DAY)
Knuckleboom Loader and Operator	$

PROPOSAL FORM 4 – NON-COLLUSION AFFIDAVIT

State of _____

County of _____

Being duly sworn deposes and says:

That she/he is an officer of the parties making the foregoing Proposal, that such Proposal is genuine and not collusive or sham; that said PROPOSER has not colluded, conspired, connived or agreed, directly or indirectly with any PROPOSER or person, to put in a sham bid or to refrain from bidding and has not in any manner, directly, or indirectly, sought by agreement or collusion or communication or conference with any person, to fix the price or affiant or any other PROPOSER, or to fix any overhead, profit or cost element of said price, or that of any other PROPOSER, or to secure any advantage against the AUTHORITY, or any person interested in the proposed contract and that all statements in said Proposal are true.

_____
Name of Proposer

_____
Print Name of Designated Signatory

_____
Signature

_____
Title

On this _____ day of _____, 20____, before me appeared _____ personally known to me to be the person described in and who executed this _____ and acknowledged that (she/he) signed the same freely and voluntarily for the uses and purposes therein described.

In witness thereof, I have hereunto set my hand and affixed my official seal the day and year last written above.

_____
Signature

Notary Public in and for the State of _____

(Affix Seal here)

_____
(Name printed)

Residing at _____

My commission expires _____

PROPOSAL FORM 5 – DRUG-FREE WORKPLACE

The undersigned vendor in accordance with Florida Statute 287.087 hereby certifies that _____ does:

(Name of Business)

1. Publish a statement notifying employees that the unlawful manufacture, distribution, dispensing, possession, or use of a controlled substance is prohibited in the workplace and specifying the actions that will be taken against employees for violations of such prohibition.

2. Inform employees about the dangers of drug abuse in the workplace, the business's policy of maintaining a drug-free workplace, any available drug counseling, rehabilitation, and employee assistance programs, and the penalties that may be imposed upon employees for drug abuse violations.

3. Give each employee engaged in providing the commodities or contractual services that are under bid a copy of the statement specified in subsection (1).

4. In the statement specified in subsection (1), notify the employees that, as a condition of working on the commodities or contractual services that are under bid, the employee will abide by the terms of the statement and will notify the employer of any conviction of, or plea of guilty or nolo contendere to, any violation of Chapter 893 or of any controlled substance law of the United State or any state, for a violation occurring in the workplace no later than five (5) days after such conviction.

5. Impose a sanction on, or require the satisfactory participation in a drug abuse assistance or rehabilitation program if such is available in the employee's community, by any employee who is so convicted.

6. Make a good faith effort to continue to maintain a drug-free workplace through implementation of this section.

As the person authorized to sign the statement, I certify that this firm complies fully with the above requirements.

_____
Print Name of Designated Signatory

_____
Signature

_____
Date

PROPOSAL FORM 6 - PROPOSER'S QUALIFICATION STATEMENT

The undersigned certifies under oath the truth and correctness of all statements and of all answers to questions made hereinafter:

SUBMITTED TO: **SOLID WASTE AUTHORITY OF PALM BEACH COUNTY**
PURCHASING SERVICES DEPARTMENT
7501 N. Jog Road
West Palm Beach, FL. 33412

Submitted by:

Name: _____

Address:_____

City, State, Zip: _____

Federal Identification Number (FID) _____

Check One	
Corporation:	☐
Partnership:	☐
Individual:	☐
Other*	☐

(* if other is being checked, please provide supporting documentation to validate the legality of the Firm)

1. State the true, exact, correct, and complete name of the partnership, trade or fictitious name under which you do business and the address of the place of business.

   The correct name of the PROPOSER is:

   _____

   The address of the principal place of business is:

   _____

   _____

2. If PROPOSER is corporation, answer the following:

   a. Date of Incorporation: _____
   b. State of Incorporation: _____
   c. President's name: _____
   d. Vice President's name: _____
   e. Secretary's name: _____
   f. Treasurer's name: _____
   g. Name and Address of Resident Agent: _____
      _____

3. If PROPOSER is an individual or a partnership, answer the following:

   a. Date of organization: _____
   b. Name, address, and ownership units of all partners:
      _____
      _____
      _____
   c. State whether general or limited partnership: _____

4. If PROPOSER is other than an individual, corporation or partnership, describe the organization and give the name and address of principals:

_____
_____
_____

5. If PROPOSER is operating under a fictitious name, submit evidence of compliance with the Florida Fictitious Name Statute.

_____

6. How many years has your organization been in business under its present business name? _____

Under what other former names has your organization operated?

_____
_____
_____

7. Indicate registration, license numbers or certificate numbers for the businesses or professions, which are the subject of this RFP solicitation. Please attach certificate of competency and/or state registration.

_____
_____
_____

8. Provide a narrative of Firm's Safety Program, Quality Assurance/Quality Control Management methods.

_____
_____
_____

9. PROPOSER shall provide **FORM A** and **FORM B** attached to this Proposers Qualification Statement in response to Experience and Qualifications as per Part III – PROPOSAL SUBMISSION REQUIREMENTS. **FORMS A & B** are attached: YES ☐ NO ☐

10. List and describe all bankruptcy petitions (voluntary or involuntary) which have been filed by or against the PROPOSER, its parent or subsidiaries or predecessor organizations during the past five (5) years. Include in the description, the disposition of each such petition.

_____
_____
_____
_____

11. A list of all enforcement actions against the facility for the last three (3) years including any consent orders entered, notices of violations received, and any judgments against the facility. Also, list the amount of any fines, penalties, or judgments, or other infractions in which the destination facility or facilities have received in the most current three (3) years of operation.

_____
_____
_____
_____
_____

12. List and describe any disciplinary action, administrative proceeding, malpractice claim or other like proceeding against your Firm or any of its lawyers, whether current or pending, as well as any such action, proceeding or claim occurring during the last five (5) years.

_____

_____

_____

_____

13. Has the PROPOSER, its principals, officers, or predecessors' organization(s) been CONVICTED of a Public Entity Crime, debarred, or suspended from bidding by any governmental entity during the last five (5) years? If so, provide details.

_____

_____

_____

_____

14. Has the PROPOSER in the past four (4) years, been rendered a final adjudicated determination in a legal or administrative proceeding in the State of Florida that the PROPOSER discriminated against its subcontractors, vendors, suppliers, or commercial customers? If yes, PROPOSER shall provide a list of all instances to include but not limited to; description of the status or resolution of the complaint, including any remedial action taken. (Attach additional sheets as necessary)

_____

_____

_____

_____

The PROPOSER acknowledges and understands that the information contained in response to this Qualifications' Statement shall be relied upon by the Solid Waste Authority of Palm Beach County (AUTHORITY), in awarding the contract and such information is warranted by PROPOSER to be true. The discovery of any omission or misstatement that materially affects the PROPOSER's qualifications to perform under the contract shall cause the AUTHORITY to reject the proposal, and if after the award, to cancel and terminate the award and/or contract.

(Signed): _____

(Printed Name): _____

(Title): _____

FORM A

COLLECTION and/or TDMS OPERATING

Experience as a Prime Contractor ONLY

List all activations for which your company collected and/or processed greater than 1 million cubic yards of debris.

Disaster Name	Date	Location	Services Provided	Contract Amount	TTL CY Collected or Processed	Contact Name, Address, Phone #

FORM B

DEBRIS REMOVAL, DEBRIS SITE OPERATIONS/PROCESSING, and FINAL DISPOSAL DESTINATION

Experience as a Prime Contractor ONLY

List all activations for which your company performed as the Prime Contractor for the past three (3) years (commencing 11/2018)

Disaster Name	Date	Location	Services Provided (Please circle selection)	Contract Amount	TTL CY Collected or Processed	Contact Name, Address, Phone #
			A B C			
			A B C			
			A B C			
			A B C			
			A B C			
			A B C			
			A B C			
			A B C			
			A B C			
			A B C			
			A B C			

Please use the following key for Services Provided: **A=Debris Removal**; **B=Debris Site Operations/Processing**; **C=Final Disposal Destination**.
List all letters that are applicable for each activation listed.

CERTIFICATION PURSUANT TO FLORIDA STATUTE §215.4725

HURRICANE/DISASTER DEBRIS REMOVAL, REDUCTION AND DISPOSAL

RFP NO.: 22-201/DL

I, _____, on behalf of _____,
Print Name Name of Business

certifies that _____ does not:
Name of Business

1. Participate in a boycott of Israel; and
2. Is not on the Scrutinized Companies that Boycott Israel list; and
3. Is not on the Scrutinized Companies with Activities in Sudan List; and
4. Is not on the Scrutinized Companies with Activities in the Iran Petroleum Energy Sector List; and
5. Has not engaged in business operations in Cuba or Syria.

As the person authorized to sign the statement, I certify that this Firm complies fully with the above requirements.

_____ _____
PROPOSER'S SIGNATURE DATE

PART VI
ATTACHMENTS

The following Attachments are included:

Attachment A – Sample Contract Agreement

Attachment B – Task Order Disaster Debris Management

Attachment C – Pre-Approved Temporary Debris Management Sites Map

Attachment D – Public Assistance Program and Policy Guide

Attachment E – Mobilization Schedule

Attachment F – FHWA Form 1273

Attachment G – Buy America Requirements

Attachment H – Performance and Payment Bond

YOUR PARTNER FOR
SOLID WASTE SOLUTIONS

ATTACHMENT A

SAMPLE AGREEMENT FOR

_____ SERVICES

BETWEEN

SOLID WASTE AUTHORITY OF PALM BEACH COUNTY

AND

(NAME OF CONSULTANT)

AGREEMENT NO. 22-XXX

SOLID WASTE AUTHORITY OF PALM BEACH COUNTY
7501 NORTH JOG ROAD
WEST PALM BEACH, FLORIDA 33412
(561) 640-4000

TABLE OF CONTENTS

ARTICLE		PAGE
1.	Effective Date and Incorporation of Recitals	1
2.	Services to be performed by Contractor	1
3.	Compensation	1
4.	Insurance	2
5.	Standard of Care	3
6.	Indemnification	3
7.	Independent Contractor	3
8.	Authority to Conduct Business	4
9.	Compliance with Laws	4
10.	Sub-Contractor	4
11.	Federal and State Taxes	4
12.	Availability of Funds	4
13.	Authority's Responsibilities	4
14.	Default	4
15.	Termination for Convenience	5
16.	Uncontrollable Forces	5
17.	Jurisdiction, Venue, Waiver of Jury Trial and Remedies	5
18.	Commercial Non-Discrimination Policy	6
19.	Waiver	6
20.	Severability	6
21.	Entirety of Agreement and Modification	6
22.	Successors and Assigns	7
23.	Contingent Fees	7
24.	Truth-in-Negotiation Certificate	7
25.	Ownership of Documents	7
26.	Public Records, Access and Audits	7
27.	Inspector General	9
28.	Notice	9
29.	Contract Administration	10
30.	Key Personnel	10
31.	Equal Business Opportunity Program	10
32.	Scrutinized Companies	10
33.	Agreements with other Governmental Entities	11
34.	Third Party Beneficiary Disclaimer	11
35.	E-Verify – Employment Eligibility	11
36.	Confidentiality	11
37.	Payment Adjustment Schedule	12
38.	Order of Agreement Activation/Location Assignment	13
39.	Task Order/Performance	13
40.	Bonds	13
41.	Florida Highway Administration (FHWA) Form 1273	14
42.	Buy America Requirements	14
43.	Disadvantaged Business Enterprises	14
44.	Certification Regarding Suspension and Debarment	15
45.	Access to Records and Their Retention	15
46.	Audit Requirements	15
47.	National Environmental Policy Act (NEPA)	16

48. Americans with Disabilities Act 16
49. Compliance with Title VI, Title VII and other Federal Laws and Regulations 16
50. Convict Labor Prohibition 16
51. Certification Regarding Lobbying Activities 16
52. DHS Seal, Logo, and Flags 16
53. No Obligation by Federal Government 16
54. Program Fraud and False or Fraudulent Statement or Related Acts 16
Contract Execution 17

EXHIBITS

A. Scope of Work 18
B. Fee Schedule 19

ATTACHMENTS

A. Sample Contract Agreement
B. Task Order Disaster Debris Management 20
C. Pre-Approved Temporary Debris Management Sites Map 21
D. Public Assistance Program and Policy Guide 22
E. Mobilization Schedule 23
F. FHWA Form 1273 24
G. Buy America Requirements 36
H. Performance and Payment Bond 37

AGREEMENT FOR PROFESSIONAL SERVICES

This Agreement is made and entered into as of _____, 2022, (hereinafter referred to as the Agreement) by and between **Solid Waste Authority of Palm Beach County**, a dependent special district created by Chapter 2001-331, Laws of Florida, as amended, (hereinafter referred to as AUTHORITY) and **NAME OF CONTRACTOR** (hereinafter referred to as CONTRACTOR), a Corporation, whose Federal Employer ID Number is _____;

Whereas, in accordance with the AUTHORITY's Request for Proposals No. 22-XXX/XX, solicited to employ the services of the CONTRACTOR for the purpose of providing _____ Services, and;

Whereas, CONTRACTOR represents it is capable and prepared to provide such services.

Now, therefore, in consideration of the promises contained herein and other good and valuable consideration, the receipt of which is acknowledged by the other, the parties hereto agree as follows:

ARTICLE 1 - EFFECTIVE DATE AND INCORPORATION OF RECITALS

The foregoing recitals are hereby incorporated herein by reference.

1.1 The Effective Date of this Agreement shall be **(MONTH)(DAY) _____, 2022** and the Initial Term of this Agreement is for three (3) years and shall expire on **(MONTH)(DAY) _____, 2025,** unless terminated earlier as provided for herein.

1.2 The AUTHORITY shall have the option of extending this Agreement for three (3) additional years, as approved by the AUTHORITY's Board or designee, in its sole and unfettered discretion, on the same terms and conditions. Such extension shall be in the form of a written Amendment to the Agreement executed by both parties.

1.3 The continuance of this Agreement from year-to-year is contingent upon successful annual recertification of the CONTRACTOR's capabilities. The recertification process will be a review of the fiscal (bankruptcy, etc.), logistical (equipment availability, etc.), and moral (conviction for environmental crime, conviction for crime against a public entity, etc.) responsibility of the CONTRACTOR and a determination by the AUTHORITY, based on this review, of whether or not the CONTRACTOR continues to be a viable firm to provide the services described in this Contract.

ARTICLE 2 - SERVICES TO BE PERFORMED BY CONTRACTOR

CONTRACTOR shall perform the services as specifically stated in the Scope of Work, attached hereto and made a part hereof as Exhibit A, and/or as may be specifically designated and authorized by the AUTHORITY. Such authorizations will be referred to as Task Orders. Each Task Order shall set forth a specific scope of services, rate/amount of compensation, completion date, and other pertinent details of the task being authorized. The AUTHORITY, by virtue of this Agreement, gives the CONTRACTOR no guarantee of any work/services or any specific amount of work/services that may be accomplished during the period this Agreement is in full force and effect.

ARTICLE 3 - COMPENSATION

3.1 The AUTHORITY shall pay CONTRACTOR in accordance with the Fee Schedule, attached hereto and made a part hereof as Exhibit B. In addition, the parties may negotiate a lump sum or not-to-exceed amount on a per-project basis on an individual Task Order.

3.2 The CONTRACTOR shall submit semi-monthly invoices for services rendered. All invoices must reference the Task Order number. Invoices shall include a statement of progress and appropriate audit quality detail to satisfy the Federal Emergency Management Agency (FEMA) requirements.

.

3.3 Payment of CONTRACTOR by AUTHORITY is not contingent upon the AUTHORITY being reimbursed by the Federal Emergency Management Agency (FEMA). Payment to CONTRACTOR will be made for any work directed by the AUTHORITY which is determined by Federal and State agencies to be ineligible for reimbursement.

3.4 Payment of invoices shall be within thirty (30) days after receipt of a correct, fully documented invoice. All invoices shall be delivered to:

Solid Waste Authority of Palm Beach County
7501 North Jog Road
West Palm Beach, Florida 33412
Attn: Accounts Payable

3.5 CONTRACTOR will clearly mark its final/last billing with the words "Final Invoice". This will certify that all services have been fully performed under this Agreement and that all charges and costs have been invoiced to the AUTHORITY. Thereupon, this account will be closed and any additional charges or costs, not included in the Final Invoice, shall be waived by CONTRACTOR. The AUTHORITY shall not be liable for the payment of any such additional charges or costs not included in the Final Invoice.

3.6 The AUTHORITY will retain 5% of the payment under each Task Order until such time as the entire project is completed to the AUTHORITY's satisfaction and all subcontractors and any material suppliers verify that they have been paid.

ARTICLE 4 - INSURANCE

4.1 During the performance of the Services under this Agreement, CONTRACTOR shall maintain the following insurance policies written by an insurance company authorized to do business in Florida and acceptable to the AUTHORITY.

1. **General Liability** Insurance with bodily injury limits of not less than $1,000,000 for each occurrence, and with property damage limits of not less than $1,000,000 for each occurrence.

2. **Automobile Liability** Insurance with bodily injury limits of not less than $5,000,000 for each person and not less than $5,000,000 for each accident and with property damage limits of not less than $5,000,000 for each accident.

3. **Workers' Compensation** Insurance in accordance with statutory requirements and Employer's Liability Insurance with limits of not less than $500,000 for each accident, $500,000 for each disease, and $500,000 aggregate.

4. **Excess Liability** Insurance with limits of not less than $10,000,000 for each occurrence and annual aggregate.

4.2 Deductible amounts shall not exceed 5% of the total amount of required insurance in each category. Should any policy contain any unusual exclusions, said exclusions shall be so indicated on the certificate(s) of insurance.

4.3 CONTRACTOR shall furnish AUTHORITY **Certificates of Insurance**, which shall include a provision that policy cancellation, non-renewal or reduction of coverage will not be effective until at least **thirty (30) days** after written notice has been given to the AUTHORITY. CONTRACTOR shall include AUTHORITY as an

Additional Insured on the General Liability and Automobile Liability insurance policy required by this Agreement. All of CONTRACTOR'S subcontractors shall be required to include AUTHORITY and CONTRACTOR as **Additional Insureds** on all of their liability insurance policies.

4.4 CONTRACTOR shall ensure that CONTRACTOR's naming of the AUTHORITY as an additional insured on its General Liability and Automobile Liability insurance policies pursuant to this Agreement shall afford coverage for the negligent, reckless, intentionally wrongful or willful acts of CONTRACTOR and other persons employed or utilized by the CONTRACTOR in the performance of this Agreement.

4.5 In the event that subcontractors used by the CONTRACTOR do not have insurance, or do not meet the required insurance limits herein, CONTRACTOR shall indemnify and hold harmless the AUTHORITY for any claim(s) in excess of the subcontractor's insurance coverage.

4.6 The CONTRACTOR shall not commence work under this Agreement until all insurance required as stated herein has been obtained and such insurance has been approved by the AUTHORITY.

ARTICLE 5 - STANDARD OF CARE

5.1 The CONTRACTOR shall exercise the same degree of care, skill, and diligence in the performance of the Services performed pursuant to this Agreement as is ordinarily provided by comparable, qualified professionals under similar circumstances. The CONTRACTOR shall, at no additional cost to AUTHORITY, re-perform services which fail to satisfy the foregoing standard of care.

5.2 The CONTRACTOR warrants that all services shall be performed by skilled and competent personnel to the highest professional standards in the field.

ARTICLE 6 - INDEMNIFICATION

6.1 GENERAL

Having considered the risks and potential liabilities that may exist during the performance of the services and in consideration of the promises included herein, AUTHORITY and CONTRACTOR agree to allocate such liabilities in accordance with this Article 6.

6.2 INDEMNIFICATION

The CONTRACTOR shall indemnify and hold harmless the AUTHORITY, and its officers and employees, from all liabilities, damages, losses, and costs, including, but not limited to, reasonable attorney's fees, to the extent caused by the negligence, recklessness, or intentionally wrongful conduct of the CONTRACTOR and other persons employed or utilized by the CONTRACTOR in the performance of the Agreement.

6.3 SURVIVAL

Upon completion of all services, obligations and duties provided for in this Agreement, or in the event of termination of this Agreement for any reason, the terms and conditions of this Article shall survive.

ARTICLE 7 - INDEPENDENT CONTRACTOR

7.1 The CONTRACTOR is, and shall be, in the performance of all work services and activities performed under this Agreement, an Independent Contractor, and not an employee, agent, or servant of the AUTHORITY. All persons engaged in any of the work or services performed pursuant to this Agreement shall at all times, and in all places, be subject to the CONTRACTOR'S sole direction, supervision, and control. The CONTRACTOR shall exercise control over the means and manner in which it and its employees perform the work, and in all respects the CONTRACTOR'S relationship and the relationship of its employees to the AUTHORITY shall be that of an Independent Contractor and not as employees or agents of the AUTHORITY.

7.2 The CONTRACTOR does not have the power or authority to bind the AUTHORITY in any promise, agreement or representation other than specifically provided for in this Agreement.

ARTICLE 8 - AUTHORITY TO CONDUCT BUSINESS

The CONTRACTOR hereby represents and warrants that it has and will continue to maintain all licenses and approvals required to conduct its business and perform all requirements in this Agreement.

ARTICLE 9 - COMPLIANCE WITH LAWS

In performance of the Services, the CONTRACTOR will comply with applicable regulatory requirements including federal, state, special district, and local laws, rules, regulations, orders, codes, criteria, and standards.

ARTICLE 10 - SUB-CONTRACTING

10.1 The AUTHORITY reserves the right, in its sole and unfettered discretion, to accept the use of a subcontractor or to reject the selection of a particular subcontractor under this Agreement.

10.2 If a subcontractor fails to perform or make progress, as required by this Agreement, and it is necessary to replace the subcontractor to complete the work in a timely fashion, the CONTRACTOR shall promptly do so, subject to acceptance of the new subcontractor by the AUTHORITY.

ARTICLE 11 - FEDERAL AND STATE TAXES

The AUTHORITY is exempt from Federal Tax and State Sales and Use Taxes. Upon request, the AUTHORITY will provide an exemption certificate to CONTRACTOR. The CONTRACTOR shall not be exempted from paying sales tax to its suppliers for materials to fulfill contractual obligations with the AUTHORITY, nor shall the CONTRACTOR be authorized to use the AUTHORITY'S Tax Exemption Number in securing such materials.

ARTICLE 12 - AVAILABILITY OF FUNDS

The obligations of the AUTHORITY under this Agreement are subject to the availability of funds lawfully appropriated for its purpose by the Board of the Solid Waste Authority of Palm Beach County.

ARTICLE 13 - AUTHORITY'S RESPONSIBILITIES

AUTHORITY shall be responsible for providing access to all project sites, and providing information on hand required by CONTRACTOR, including existing reports, studies, financial information, and other required data that are available in the files of the AUTHORITY.

ARTICLE 14 - DEFAULT

14.1 The AUTHORITY may, by written notice of default to the CONTRACTOR, terminate the Agreement in whole or in part if the CONTRACTOR: a) fails to satisfactorily perform any provisions of this Agreement; or b) fails to make progress so as to endanger performance under the terms and conditions of this Agreement; or c) repeatedly fails to perform; or d) does not remedy any such failure within a period of ten (10) days (or such period as the Director of Purchasing Services may authorize in writing) after receipt of notice from the Director of Purchasing Services specifying such failure. In the event the AUTHORITY terminates this Agreement in whole or in part because of default of the CONTRACTOR, the AUTHORITY may, in its sole and unfettered discretion, procure goods and/or services similar to those required under this Agreement and the CONTRACTOR shall be liable for any excess costs incurred due to this action.

14.2 If it is determined that the CONTRACTOR was not in default or that the default was excusable (e.g., failure due to causes beyond the control of, or without the fault or negligence of the CONTRACTOR), the rights and obligations of the parties shall be those provided in Article 15 – Termination for Convenience.

ARTICLE 15 – TERMINATION FOR CONVENIENCE

15.1 The Director of Purchasing Services may, whenever the interests of the AUTHORITY so require, terminate this Agreement, in whole or in part, for the convenience of the AUTHORITY. The Director of Purchasing Services shall give five (5) business days prior written Notice of Termination to the CONTRACTOR, specifying the portions of the Agreement to be terminated and when the termination is to become effective. If only portions of the Agreement are terminated, the CONTRACTOR has the right to withdraw, without adverse action by the AUTHORITY, from the entire Agreement.

15.2 Unless directed differently in the Notice of Termination, the CONTRACTOR shall incur no further obligations in connection with the terminated work and shall stop work to the extent specified on the date given in the Notice of Termination. Additionally, unless directed differently, the CONTRACTOR shall terminate outstanding orders and/or subcontracts related to the terminated work.

15.3 Unless the CONTRACTOR is in breach of this Agreement, the CONTRACTOR shall be paid for services rendered to the AUTHORITY'S satisfaction through the date of termination.

ARTICLE 16 - UNCONTROLLABLE FORCES

16.1 Neither the AUTHORITY nor CONTRACTOR shall be considered to be in default of this Agreement if delays in or failure of performance shall be due to Uncontrollable Forces, the effect of which, by the exercise of reasonable diligence, the non-performing party could not avoid. The term "Uncontrollable Forces" shall mean any event which results in the prevention or delay of performance by a party of its obligations under this Agreement and which is beyond the reasonable control of the nonperforming party. It includes, but is not limited to fire, flood, earthquakes, storms, lightning, epidemic, pandemic, war, riot, civil disturbance, sabotage, and governmental actions.

16.2 Neither party shall, however, be excused from performance if nonperformance is due to forces which are preventable, removable, or remediable and which the nonperforming party could have, with the exercise of reasonable diligence, prevented, removed or remedied with reasonable dispatch. The non-performing party shall, within a reasonable time of being prevented or delayed from performance by an uncontrollable force, give written notice to the other party describing the circumstances and uncontrollable forces preventing continued performance of the obligations of this Agreement.

ARTICLE 17 – JURISDICTION, VENUE, WAIVER OF JURY TRIAL AND REMEDIES

This Agreement shall be governed by the laws of the State of Florida. Any and all legal action necessary to enforce the Agreement shall be in a State court of competent jurisdiction located exclusively in Palm Beach County. With the exception of the choice of law and venue provisions contained herein, no remedy conferred upon any party is intended to be exclusive of any other remedy, and each and every such remedy shall be cumulative and shall be in addition to every other remedy given hereunder or now or hereafter existing at law or in equity. No single or partial failure by any party to exercise any right, power, or remedy hereunder, shall preclude that party from exercising that right, power or remedy in the future. **THE AUTHORITY AND CONSULTANT FREELY AND VOLUNTARILY AGREE TO WAIVE ITS RESPECTIVE RIGHT TO A JURY TRIAL ON ANY ISSUE(S) SO TRIABLE.**

ARTICLE 18 – COMMERCIAL NON-DISCRIMINATION POLICY

As a condition of entering into this Agreement, the CONTRACTOR represents and warrants that it will comply with the AUTHORITY's Commercial Non-Discrimination Policy, as described in Section 6.3 of the AUTHORITY's Purchasing Manual, including subsequent amendments thereto, if any. As part of such compliance, the CONTRACTOR shall not discriminate on the basis of race, color, religion, ancestry or national origin, gender, age, marital status, familial status, sexual orientation, gender identity or expression, disability, or genetic information in the solicitation, selection, hiring or commercial treatment of subcontractors, vendors, suppliers, or commercial customers, nor shall the CONTRACTOR retaliate against any person for reporting instances of such discrimination. The CONTRACTOR shall provide equal opportunity for subcontractors, vendors and suppliers to participate in all of its public sector and private sector subcontracting and supply opportunities, provided that nothing contained in this clause shall prohibit or limit otherwise lawful efforts to remedy the effects of marketplace discrimination that have occurred or are occurring in the AUTHORITY's relevant marketplace in Palm Beach County. The CONTRACTOR understands and agrees that a material violation of this clause shall be considered a material breach of this Agreement and may result in termination of this Agreement, disqualification or debarment of the CONTRACTOR from participating in AUTHORITY contracts, or other sanctions. This clause is not enforceable by or for the benefit of, and creates no obligation to, any third party. The CONTRACTOR agrees and understands that the provisions of Section 6.3 of the AUTHORITY's Purchasing Manual are incorporated herein by reference and that the CONTRACTOR is familiar with the contents of same.

ARTICLE 19 - WAIVER

A waiver by either AUTHORITY or CONTRACTOR of any breach of this Agreement shall not be binding upon the waiving party unless such waiver is in writing. In the event of a written waiver, such a waiver shall not affect the waiving party's rights with respect to any other or further breach. The making or acceptance of a payment by either party with knowledge of the existence of a default or breach shall not operate or be construed to operate as a waiver of any subsequent default or breach.

ARTICLE 20 - SEVERABILITY

20.1 The invalidity, illegality, or unenforceability of any provision of this Agreement, or the occurrence of any event rendering any portion or provision of this Agreement void, shall in no way affect the validity or enforceability of any other portion or provision of the Agreement. Any void provision shall be deemed severed from the Agreement and the balance of the Agreement shall be construed and enforced as if the Agreement did not contain the particular portion or provision held to be void. The parties further agree to reform the Agreement to replace any stricken provision with a valid provision that comes as close as possible to the intent of the stricken provision.

20.2 The provisions of this section shall not prevent the entire Agreement from being void if a provision which is of the essence of the Agreement is determined to be void.

ARTICLE 21 - ENTIRETY OF AGREEMENT AND MODIFICATION

The AUTHORITY and the CONTRACTOR agree that this Agreement, including Exhibits, and matters incorporated by specific reference set forth the entire agreement between the parties, and that there are no promises or understandings other than those stated herein. This Agreement supersedes all prior agreements, contracts, proposals, representations, negotiations, letters or other communications between the AUTHORITY and CONTRACTOR pertaining to the services, whether written or oral. None of the provisions or terms and conditions contained in this Agreement may be added to, amended, modified, superseded or otherwise altered except by written instrument executed by the parties thereto.

ARTICLE 22 - SUCCESSORS AND ASSIGNS

AUTHORITY and CONTRACTOR each binds itself and its partners, successors, executors, administrators, assigns and legal representatives to the other party and its partners, successors, executors, administrators, assigns and legal representative. CONTRACTOR shall not assign this Agreement without the prior express written approval of the AUTHORITY in its sole discretion via executed amendment.

ARTICLE 23 - CONTINGENT FEES

The CONTRACTOR warrants that it has not employed or retained any company or person, other than a bona fide employee working solely for the CONTRACTOR to solicit or secure this Agreement and that it has not paid or agreed to pay any person, company, corporation, individual or firm, other than a bona fide employee working solely for the CONTRACTOR, any fee, commission, percentage, gift or any other consideration contingent upon or resulting from the award or making of this Agreement.

ARTICLE 24 - TRUTH-IN-NEGOTIATION CERTIFICATE

24.1 Execution of this Agreement by the CONTRACTOR shall act as the execution of a truth-in-negotiation certificate certifying that the wage rates and costs used to determine the compensation provided for in this Agreement are accurate, complete, and current as of the Effective Date of the Agreement.

24.2 The said rates and costs shall be adjusted to exclude any significant sums should the AUTHORITY determine that the rates and costs were increased due to inaccurate, incomplete or noncurrent wage rates or due to inaccurate representations of fees paid to outside consultants. The AUTHORITY shall exercise its rights under this 'Certificate" within one (1) year following payment.

ARTICLE 25 - OWNERSHIP OF DOCUMENTS

CONTRACTOR shall be required to cooperate with other consultants relative to providing information requested in a timely manner and in the specified form. Any and all documents, records, disks, original drawings, or other information shall become the property of the AUTHORITY for its use and/or distribution as may be deemed appropriate by the AUTHORITY in its sole and unfettered discretion.

ARTICLE 26 - PUBLIC RECORDS, ACCESS AND AUDITS

26.1 It is the intent of this Article to maintain compliance with the Florida Public Records Law, Ch. 119, Florida Statutes, as amended.

26.2 **DESIGNATED RECORDS CUSTODIAN CONTACT INFORMATION:**

IF THE CONTRACTOR HAS QUESTIONS REGARDING THE APPLICATION OF CHAPTER 119, FLORIDA STATUTES, THE CONTRACTOR'S DUTY TO PROVIDE PUBLIC RECORDS RELATING TO THIS AGREEMENT, CONTACT THE CUSTODIAN OF PUBLIC RECORDS AT:
RECORDS MANAGER
SOLID WASTE AUTHORITY OF PALM BEACH COUNTY
7501 NORTH JOG ROAD
WEST PALM BEACH, FL 33412
561-640-4000 EXT. 4606
RECORDSCUSTODIAN@SWA.ORG

26.3 The CONTRACTOR shall maintain records related to all charges, expenses, and costs incurred in estimating and performing the work, in accordance with the timeframes and classifications for records retention as per the General Records Schedule GS1-SL for State and Local Government Agencies (see: https://dos.myflorida.com/library-archives/records-management/general-records-schedules/) after completion or termination of this Contract. Upon AUTHORITY'S request, CONTRACTOR shall provide AUTHORITY with access to such records during normal business hours at a location within Palm Beach County for purposes of inspection or audit.

26.4 Notwithstanding anything herein to the contrary, the CONTRACTOR expressly acknowledges that: i) it is providing a specific service to the AUTHORITY in the performance of this Contract; ii) acting on behalf of the AUTHORITY in the performance of this Contract; iii) that it has read and is familiar with the Florida Public Records Law, Ch. 119, Florida Statutes, as amended, and both understand its responsibility and obligation to comply with this law; and iv) to the extent any question(s) arise regarding its duties to produce public records, it shall contact the Records Manager with same.

26.5 Any public records requests directed to, or related in any way to this contract shall be directed solely to the Records Manager. If the requested records are not in the possession of the Records Manager, they shall immediately notify the CONTRACTOR and the CONTRACTOR must provide the records or allow access to the records within a reasonable time. A CONTRACTOR who fails to provide the records to the public agency within a reasonable time may be subject to penalties under Florida Statutes (F.S) §119.10, and §119.10(2) provides that a person who willfully and knowingly violates the Public Records Act commits a misdemeanor of the first degree, which is punishable by up to a year in jail and a fine not to exceed $1,000.

26.6 Therefore, the CONTRACTOR is required to:

1) Keep and maintain public records that ordinarily and necessarily would be required by the AUTHORITY in order to perform the service;

2) Upon AUTHORITY's request from the AUTHORITY's Records Manager; provide the AUTHORITY with a copy of the requested records to allow the records to be inspected or copied within a reasonable time on the same terms and conditions that the AUTHORITY would provide the records at a cost that does not exceed the cost provided by Florida law;

3) Ensure that public records that are exempt or confidential and exempt from public records disclosure requirements are not disclosed except as authorized by law for the duration of the Agreement term and following the completion of the Agreement if the CONTRACTOR does not transfer the records to the AUTHORITY; and

4) Upon completion of the Agreement, transfer at no cost to the AUTHORITY, all public records in possession of the CONTRACTOR or keep and maintain public records to the AUTHORITY upon completion or termination of the Agreement; the CONTRACTOR shall destroy any duplicate public records that are exempt or confidential and exempt from public records disclosure requirements. If the CONTRACTOR keeps and maintains public records upon completion of the Agreement, the CONTRACTOR shall meet all applicable requirements for retaining public records. All records stored electronically must be provided to the AUTHORITY, upon request from the AUTHORITY's Records Manager, either during performance of the Agreement or after termination or completion of the Agreement in a format that is compatible with the information technology systems of the AUTHORITY.

26.7 Failure of the CONTRACTOR to comply with these requirements shall be a material breach of this Contract.

26.8 CONTRACTOR shall maintain financial and program records to justify all charges and costs incurred in performing the work for at least three (3) years following final payment by the AUTHORITY as Federal Emergency Management Agency (FEMA) sub-grantee as required by 2 CFR 200.333. The AUTHORITY shall have access to such books, records, and documents as required in this section for the purpose of inspection or audit.

26.9 In the event records retention requirements in Florida Statutes Chapter 119 and 257 exceed those of FEMA, the records shall be retained to comply with the State of Florida requirements.

ARTICLE 27 - INSPECTOR GENERAL

Palm Beach County has established the Office of the Inspector General (OIG), Ordinance No. 2009-049 which is authorized and empowered to review past, present and proposed county contracts, transactions, accounts and records. The AUTHORITY has entered into an Interlocal Agreement (ILA) for Inspector General Services. This agreement provides for the Inspector General to provide services to the AUTHORITY in accordance with the authority, functions and powers set out in the Palm Beach County Office of Inspector General Ordinance. All parties doing business with the AUTHORITY and receiving AUTHORITY funds shall fully cooperate with the Inspector General including providing access to records relating to this agreement. The Inspector General has the power to subpoena witnesses, administer oaths, require the production of records, and audit, investigate, monitor, and inspect the activities of the CONTRACTOR, its officers, agents, employees, and lobbyists in order to ensure compliance with contract specifications and detect corruption and fraud. Failure to cooperate with the Inspector General or interference or impeding any investigation shall be in violation of Ordinance 2009-049, and punished pursuant to Section 125.69, Florida Statutes, in the same manner as a second-degree misdemeanor.

ARTICLE 28 - NOTICE

Any notice, demand, communication, or request required or permitted hereunder shall be in writing and delivered in person or sent by certified mail, postage prepaid as follows:

AS TO AUTHORITY

Solid Waste Authority of Palm Beach County
7501 North Jog Road
West Palm Beach, Florida 33412

Attention: Executive Director
Office No.: 561-640-4000 Fax No.: 561-640-3400

AS TO CONTRACTOR

(Name of Contractor)
Address #1
Address #2
City/State/Zip Code

Attention: _____, TITLE
Office No.: _____ Fax No.: _____ E-Mail: _____

Notices shall be effective when received at the addresses as specified above. Changes in the respective addresses to which such notice is to be directed may be made from time to time by either party by written notice to the other party.

Facsimile transmission is acceptable notice effective when received, however, facsimile transmissions received (i.e.; printed) after 5:00 p.m. or on weekends or holidays, will be deemed received on the next business day. The original of the notice must additionally be mailed as required herein.

Nothing contained in this Article shall be construed to restrict the transmission of routine communications between representatives of CONTRACTOR and AUTHORITY.

ARTICLE 29 - CONTRACT ADMINISTRATION

Services of CONTRACTOR shall be under the general direction of the **Chief Operations Officer**, or designee, who shall act as the AUTHORITY'S representative during the term of the Agreement.

ARTICLE 30 - KEY PERSONNEL

CONTRACTOR shall notify AUTHORITY in the event of key personnel changes which might affect this Agreement. Notification shall be made within ten (10) days of said changes. AUTHORITY has the right to reject any proposed changes in key personnel. The following personnel shall be considered key personnel:

_____ – Project Manager
Cell No.: XXX-XXX-XXXX E-Mail: _____@_____.com

ARTICLE 31 – EQUAL BUSINESS OPPORTUNITY PROGRAM:

The Governing Board of the AUTHORITY has implemented the Economic Inclusion Policy administered by the Equal Business Opportunity (EBO) Program Office to ensure that all segments of its business population, including, but not limited to local, small, minority, and women-owned businesses, have an equitable opportunity to participate in the AUTHORITY'S procurement process, in accordance with Section 6.1 through 6.4 of the Purchasing Manual. Program tools and solicitation incentives are hereby referred to as the Affirmative Procurement Initiatives (API).

31.1 **Affirmative Procurement Initiative (API):**

The AUTHORITY has NOT applied an Affirmative Procurement Initiative to this Agreement.

ARTICLE 32 - SCRUTINIZED COMPANIES

32.1 As provided in F.S. 287.135, by entering into this Agreement or performing any work in furtherance hereof, the CONTRACTOR certifies that it, its affiliates, suppliers, subcontractors and consultants who will perform hereunder, have not been placed on the Scrutinized Companies With Activities in Sudan List or Scrutinized Companies With Activities in The Iran Petroleum Energy Sector List created pursuant to F.S. 215.473, or is engaged in business operations in Cuba or Syria.

If the AUTHORITY determines, using credible information available to the public, that a false certification has been submitted by CONTRACTOR, this Agreement may be terminated and a civil penalty equal to the greater of $2 million or twice the amount of this Agreement shall be imposed, pursuant to F.S. 287.135. Said certification must also be submitted at the time of renewal of this Agreement.

32.2 As provided in F.S. 287.135, by entering into this Agreement or performing any work in furtherance hereof, this Agreement certifies that it, its affiliates, suppliers, subcontractors, and consultants who will perform hereunder, have not been placed on the Scrutinized Companies that Boycott Israel List, or is engaged in a boycott of Israel, pursuant to F.S. 215.4725.
If the AUTHORITY determines, using credible information available to the public, that a false certification has been submitted by CONTRACTOR, this may be terminated and a civil penalty equal to the greater of $2 million or twice the amount of this shall be imposed, pursuant to F.S. 287.135. Said certification must also be submitted at the time of renewal of this Agreement.

ARTICLE 33 - AGREEMENTS WITH OTHER GOVERNMENTAL ENTITIES

33.1 The CONTRACTOR agrees that this Agreement constitutes an offer to all State and local government agencies of the State of Florida under the same terms and conditions, for the same prices and for the same effective period as specified in this Agreement should the CONTRACTOR deem it in the best interest of their business to do so.

33.2 The Agreement in no way restricts or interferes with any State or local government agencies of the State of Florida from re-solicitation.

ARTICLE 34 – THIRD PARTY BENEFICIARY DISCLAIMER

It is not the intention of these documents to create third party beneficiary status in any person or entity that is not a direct party to this Agreement, and no language in this Agreement should be construed or interpreted as creating a third party beneficiary**.**

ARTICLE 35 – E-VERIFY – EMPLOYMENT ELIGIBILITY

35.1 The CONTRACTOR certifies, warrants and represents that it is in compliance with Section 448.095, Florida Statutes, as may be amended and that CONTRACTOR shall: (1) register with and use the E-Verify System (E-Verify.gov) to electronically verify the employment eligibility of all newly hired workers; and (2) has verified that all of the CONTRACTOR'S subcontractors performing the duties and obligations of this Agreement are registered with and use the E-Verify System to electronically verify the employment eligibility of all newly hired workers. CONTRACTOR shall obtain from each of its subcontractors an affidavit stating that the subcontractor does not employ, contract with, or subcontract with an Unauthorized Alien, as that term is defined in Section 448.095(1)(k), Florida Statutes, as may be amended. CONTRACTOR shall maintain a copy of any such affidavit from a subcontractor for, at a minimum, the duration of the subcontract and any extension thereof. This provision shall not supersede any provision of this Agreement which requires a longer retention period.

35.2 AUTHORITY shall terminate this Agreement if it has a good faith belief that CONTRACTOR has knowingly violated Section 448.09(1), Florida Statutes, as may be amended. If AUTHORITY has a good faith belief that one of CONTRACTOR'S subcontractor(s) has knowingly violated Section 448.09(1), Florida Statutes, as may be amended, AUTHORITY shall notify CONTRACTOR to terminate its contract with the subcontractor and CONTRACTOR shall immediately terminate its contract with the subcontractor. If AUTHORITY terminates this Agreement pursuant to the above, CONTRACTOR shall be barred from being awarded a future contract by AUTHORITY for a period of one (1) year from the date on which the Agreement was terminated. In the event of such contract termination, CONTRACTOR shall also be liable for any additional costs incurred by AUTHORITY as a result of the termination.

ARTICLE 36 – CONFIDENTIALITY

No reports, information, computer programs, documentation, and/or data given to, or prepared or assembled by the CONTRACTOR under this Agreement shall be made available to any individual or organization by the CONTRACTOR without prior written approval of the AUTHORITY.

REMAINDER OF PAGE LEFT BLANK INTENTIONALLY

ARTICLE 37 – PAYMENT ADJUSTMENT SCHEDULE

37.1 The AUTHORITY acknowledges the fluctuating nature of prices.

37.2 Annual Non-Fuel: The Non-Fuel Adjustment shall be applied to those rates subject to adjustment and as provided within this Agreement. For the purpose of this Agreement, the Non-Fuel component is assumed to represent 90% of the CONTRACTOR's costs. Therefore, 90% of the approved rates shall be so adjusted:

The rates shall be adjusted as follows:

The rates shall be adjusted annually, commencing on the first anniversary date, by the change in the Water and Sewer and Trash Collection Services Index, Series ID CUSR0000SEHG, as published by the United States Department of Labor, Bureau of Labor Statistics (www.bls.gov). The change in the index shall be calculated by dividing the average of the index over the twelve-month period ending the December preceding the effective date of the adjustment (January – December 2022) by the average of the index over the twelve-month period from January 2021 through December 2021. The first Annual Non-Fuel adjustment shall be effective May 7, 2023 to May 6, 2024.

For example:

For the Contract year beginning May 7, 2023, the average of the index over the twelve-month period from January 2022 through December 2022 shall be divided by the average of the index over the twelve-month period from January 2021 through December 2021, multiplying the result by ninety (90) percent of the contract or AUTHORITY established price, and subtracting ninety (90) percent of the contract or AUTHORITY established price.

The surcharge/credit shall be rounded to the nearest cent.

Formula:

Most Recent Year Average / Prior Year Average x .90 x Rate – (.90 x Rate) = Annual Adjustment

Calendar:

Annual Payment Adjustment Calendar

April 2023	April 2024

Extension Clause Annual Payment Adjustment Schedule

April 2025	April 2026	April 2027

37.3 **Activation Fuel Adjustment (Fuel Surcharge/Credit)**

The rates subject to adjustment shall be subject to a fuel price surcharge/credit for fluctuations in the price of fuel. For the purpose of this Agreement, fuel is assumed to represent 10% of the Contractor's costs therefore 10% of the approved rates shall be so adjusted. Fuel adjustment shall be calculated and effective upon activation.

The rates shall be adjusted as follows:

For the rates subject to adjustment, a fuel surcharge/credit shall be charged/credited basis based on the

percentage change in the average price of fuel as published by the Oil Price Information Service (OPIS) and measured by the OPIS Standard Rack, OPIS No. 2 Distillate Gross Prices, Unbranded Average for Miami, Florida between the month of **January 2022 (Base)** and the most recent month available upon activation.

Fuel Adjustment does not use a floor or ceiling and provides adjustments in either direction without limit.

The surcharge/credit shall be rounded to the nearest cent.

Formula:

Most recent OPIS (at activation) / Base x .10 x Rate – (.10 x Rate) = Fuel Adjustment (for duration of activation)

For example:

Should activation occur October 2023, the fuel surcharge/credit shall be calculated by dividing the reported unbranded average price for September 2023 by the Base (unbranded average price for January 2022), multiplying the result by ten (10) percent of the contract or Authority established price, and subtracting ten (10) percent of the contract or Authority established price.

37.4 In the event that either of these indices is no longer available, the parties shall mutually agree to a replacement index. The value of the adjustment will be determined by the AUTHORITY.

ARTICLE 38 – ORDER OF AGREEMENT ACTIVATION/LOCATION ASSIGNMENT

The CONTRACTOR has entered into a contingent Agreement with the AUTHORITY for Hurricane/Disaster Debris Removal, Reduction, and Disposal. The Agreement awarded will be activated on an as-needed basis as solely determined by the AUTHORITY. The AUTHORITY intends to activate the CONTRACTOR in the order of the Selection Committee ranking, as best meets the needs of the AUTHORITY. The AUTHORITY reserves the sole and unfettered right to assign/reassign any or all CONTRACTORS at any time as may be deemed appropriate depending upon the circumstance(s), the event, or any other condition which may warrant such action.

ARTICLE 39 – TASK ORDER/PERFORMANCE

Task Orders shall be executed bilaterally, and the scope of services and format of Task Orders shall be mutually agreed to by the CONTRACTOR and AUTHORITY. Performance will be measured by the metrics established in each Task Order. After 1/3 and again after 2/3 of the stipulated number of days of work in the Task Order have elapsed, the CONTRACTOR(S) shall provide a written progress report to the AUTHORITY for review and acceptance. The AUTHORITY shall have the right to correct for CONTRACTOR default or underperformance by any means it deems in its best interest. CONTRACTOR will be required to provide a daily report of quantity of work performed under each Task Order. The daily report shall be submitted by 11:00 a.m. or earlier the following morning.

ARTICLE 40 – BONDS

CONTRACTOR shall maintain a Proposal Bond in the sum of $500,000. The CONTRACTOR's Proposal Bond will be returned to the CONTRACTOR in exchange for and acceptance of an appropriate size bond as determined by the AUTHORITY after assessment of damage and definition of the CONTRACTOR's scope of service. In case of hurricane caused damage, a Category 1 storm would require a $2,000,000 Bond, a Category II would require a $4,000,000 Bond, a Category III would require a $6,000,000 Bond, a Category IV would require an $8,000,000 Bond, and a Category V would require a $10,000,000 Bond. The Bond required would be a Performance and Payment Bond, Attachment H. The cost of the Bond is included in the unit rates in the Fee Schedule, Exhibit B. The CONTRACTOR shall maintain the Proposal Bond in effect until the Performance and Payment Bond is submitted to and accepted by the AUTHORITY. If the CONTRACTOR fails to supply a Performance and Payment Bond, the AUTHORITY shall be entitled to retain the Proposal Bond to rectify the CONTRACTOR's unacceptable performance. Pending successful annual CONTRACTOR recertification, the Proposal Bond shall be in effect for the entire term of the Agreement, except for period(s) of time

when a Performance and Payment Bond is in effect.

ARTICLE 41 – FLORIDA HIGHWAY ADMINISTRATION (FHWA) FORM 1273

41.1 This Agreement incorporates all of the provisions set forth in the document commonly known as FHWA Form 1273, Attachment F, which is attached hereto and incorporated by reference as part of this Agreement. The term "contractor" as used in Attachment F shall apply to and mean the CONTRACTOR who may be referred to in Attachment F as the "prime contractor", "bidder", "proposer", "prospective primary participant", "prospective participant", "participant" or the like. The CONTRACTOR will perform the duties and obligations of the other contracting party regardless of the description or label used in Form 1273, Attachment F.

41.2 The CONTRACTOR shall comply with the Davis-Bacon wages rates to the extent applicable to the work performed under this Agreement. The provisions of the Davis-Bacon Act do not apply to debris removal work unless such work is done in conjunction with a construction project or "linked" to a particular Federal Highway. Wage rate tables may be found at http://www.dot.state.fl.us/construction/wage.shtm. Said wage rate tables are incorporated into and made part of this Agreement by reference.

ARTICLE 42 – BUY AMERICA REQUIREMENTS

The CONTRACTOR agrees to comply with the requirements of the Federal Buy America law (See 23 U.S.C. 313, ISTEA Sections 1041(a) and 1048(a), as they may be amended from time to time) as they relate to Federal-aid contracts and the use of steel and iron produced in the United States. A description of the requirements of Buy America is set forth in Attachment G, which is attached hereto and incorporated by reference as part of this Agreement. CONTRACTOR shall provide a certification statement regarding the origin of all materials or products covered under the Buy America provisions and used in its performance of the Agreement in accordance with the requirements of law and the AUTHORITY, FDOT, and FEMA, to the extent applicable.

ARTICLE 43 – DISADVANTAGED BUSINESS ENTERPRISES

43.1 This provision shall supplement Article 31 "Equal Business Opportunity Program" of the Agreement. The Agreement is subject to the requirements of 49 CFR Part 26. The CONTRACTOR shall not discriminate on the basis of race, color, national origin, or sex in the performance of the Agreement. The CONTRACTOR shall carry out the applicable requirements of 49 CFR Part 26 in the award and administration of this U.S. DOT-assisted contract. Failure by the CONTRACTOR to carry out these requirements is a material breach of Agreement, which may result in the termination of this Agreement or such other remedy as the AUTHORITY deems appropriate, including but not limited to the withholding of payments. Each subcontract the CONTRACTOR signs with a subcontractor must include the assurance in this paragraph. (See 49 CFR 26.13). Upon request, the CONTRACTOR will provide the AUTHORITY with a copy of each subcontract it enters into.

43.2 The CONTRACTOR is required to pay its subcontractors performing work related to this Agreement for satisfactory performance of that work no later than thirty (30) days after the CONTRACTOR's receipt of payment for that work from the AUTHORITY. The CONTRACTOR may not hold any retainage from its subcontractors unless pursuant to an agreement approved by the AUTHORITY. The CONTRACTOR shall return all retainage payments withheld within thirty (30) days after the subcontractor's work has been satisfactorily completed.

43.3 The CONTRACTOR shall, on a monthly basis, submit payment certifications, including a certification regarding their truth and accuracy, for all payments it is seeking and certifications from all subcontractors indicating who has been paid and how. The certifications shall comply with all Federal and State requirements regarding the reporting of DBE participation. The CONTRACTOR shall, if required by the AUTHORITY or FDOT, report its DBE participation monthly on the Equal Opportunity Reporting System located on the Florida Department of Transportation's (FDOT) website found at www.bipincwebapps.com/bizwebflorida/. Audits

may be conducted to review payments to DBE subcontractors. The CONTRACTOR will fully cooperate with the AUTHORITY, FDOT, or FEMA regarding the monitoring of subcontractors and payments made thereto.

ARTICLE 44 – CERTIFICATION REGARDING SUSPENSION AND DEBARMENT

44.1 This Agreement is a covered transaction for purposes of 49 CFR Part 29. Accordingly, the CONTRACTOR shall verify that neither the CONTRACTOR, nor its principals, as defined at 49 CFR 29.995, or affiliates, as defined at 49 CFR 29.905, are excluded or disqualified from participation in this Agreement as defined at 49 CFR 29.940 and 29.945.

44.2 The CONTRACTOR agrees to comply with the requirements of 49 CFR 29, Subpart C throughout the term of this Agreement. The CONTRACTOR must include the requirement to comply with 49 CFR 29, Subpart C in any lower tier covered transaction it enters into. CONTRACTOR's certification is a material representation of fact relied upon by the AUTHORITY. If it is later determined that the CONTRACTOR knowingly rendered an erroneous certification, in addition to remedies available to the AUTHORITY, the State or Federal government may pursue any available remedies, including but not limited to suspension and/or debarment. The CONTRACTOR further agrees that it will include a provision requiring such compliance in all of its subcontracts or lower tier covered transactions.

ARTICLE 45 – ACCESS TO RECORDS AND THEIR RETENTION

45.1 This provision shall supplement Article 26 of this Agreement. The CONTRACTOR shall maintain adequate records to justify all charges, expenses, and costs incurred in estimating and performing the Agreement for at least five (5) years after completion or termination of this Agreement or FDOT's closure of an "emergency event" with the Florida Division of Emergency Management, whichever comes last, except in the event of litigation or settlement of claims arising from the performance of the Agreement, the CONTRACTOR agrees to maintain said records until all litigation, claims, appeals or exceptions related thereto have been resolved. The records shall be maintained at a location in Palm Beach County, Florida or such other location in Florida approved by the AUTHORITY.

45.2 The CONTRACTOR shall make all of its books, records, and other documents related, in any manner to its or its subcontractors' performance of the Agreement, available to the AUTHORITY and any other funding entity (e.g. FDOT, FEMA, the Comptroller General of the U.S. or any of their authorized representatives) for the purpose of examination, audit, reproduction, excerpts and transcripts, during normal business hours, at the CONTRACTOR's place of business or if CONTRACTOR's place of business is not located in Palm Beach County, then at the location for maintenance of records referenced above. The CONTRACTOR shall also require its subcontractors to make their books, records and documents available for examination, audit, reproduction, excerpts, and transcripts, for the same duration and in the same manner, and at or near the same locations required herein of CONTRACTOR.

ARTICLE 46 – AUDIT REQUIREMENTS

This provision shall supplement Article 26 of this Agreement. The CONTRACTOR agrees that audits may be undertaken of its records related to its performance of the Agreement as may be authorized or required under OMB Circular A-133, as revised. The CONTRACTOR agrees that it will comply and fully cooperate with the AUTHORITY and any State and/or Federal funding agency(ies), including but not limited to FDOT, Florida's Auditor General, FEMA, or any of their authorized representatives, in any audit or monitoring procedures or processes any such entity(ies) may undertake related to CONTRACTOR's performance of the Agreement.

ARTICLE 47 – NATIONAL ENVIRONMENTAL POLICY ACT (NEPA)

The CONTRACTOR shall cooperate with the AUTHORITY, FDOT, and FEMA so as to assure that all activities related to the performance of this Agreement comply with the requirements of the National NEPA of 1969, as amended, and the regulations and guidance related thereto.

ARTICLE 48 – AMERICANS WITH DISABILITIES ACT

The CONTRACTOR does hereby represent and certify that it will comply with all the requirements of the Americans with Disabilities Act of 1990 (42 USC 12102, et seq.), as it may be amended, and all applicable impending regulations of the U.S. DOT, FEMA, and other Federal-aid agencies.

ARTICLE 49 – COMPLIANCE WITH TITLE VI, TITLE VII, AND OTHER FEDERAL LAWS AND REGULATIONS

The CONTRACTOR does hereby represent and certify that it will comply with all the requirements imposed by Title VI of the Civil Rights Act of 1964 and Title VII of the Civil Rights Act of 1968, as they have been and may be modified from time to time (42 USC 2000d et. Seq. and 3601 et seq.) and the Age Discrimination and Employment Act of 1967 and Section 303 of the Age Discrimination Act of 1975, as amended (42 USC 6102), and all applicable Federal laws and regulations, policies, procedures, and directives of the U.S.DOT, FEMA and/or other Federal-aid agencies, as they may be promulgated and amended from time to time.

ARTICLE 50 – CONVICT LABOR PROHIBITION

The CONTRACTOR does hereby represent and certify that it will comply with the convict labor prohibition in 23 U.S.C. 114, and all implementing regulations thereto.

ARTICLE 51 – CERTIFICATION REGARDING LOBBYING ACTIVITIES

A Bidder or Proposer for an award of certain Federal-Aid contracts in the amount of $100,000 or more, must file the certification required by 49 CFR Part 2. The CONTRACTOR confirms that by signing and submitting a Bid or Proposal for the work covered by this Agreement, it made the certification described in Section X1 of the Attachment F herein.

ARTICLE 52 – DEPARTMENT OF HOMELAND SECURITY (DHS) SEAL, LOGO, AND FLAGS

The CONTRACTOR shall not use the DHS seal(s), logos, crests, or reproductions of flags or likenesses of DHS agency officials without specific FEMA pre-approval.

ARTICLE 53 – NO OBLIGATION BY FEDERAL GOVERNMENT

The Federal Government is not a party to this Agreement and is not subject to any obligations or liabilities to the AUTHORITY, CONTRACTOR, or any other party pertaining to any matter resulting from this Agreement.

ARTICLE 54 – PROGRAM FRAUD AND FALSE OR FRAUDULENT STATEMENTS OR RELATED ACTS

The CONTRACTOR acknowledges that 31 U.S.C Chapter 38 (Administrative Remedies for False Claims and Statements) applies to the CONTRACTOR's actions pertaining to this Agreement.

REMAINDER OF PAGE LEFT BLANK INTENTIONALLY

In Witness Whereof, AUTHORITY, and CONTRACTOR have made and executed this Agreement all as of the day and year first above written.

SOLID WASTE AUTHORITY OF PALM BEACH COUNTY:

WITNESS:

1. _____

2. _____

By: _____
Daniel Pellowitz
Executive Director

(SEAL)

APPROVED AS TO LEGAL SUFFICIENCY:

By: _____
Howard J. Falcon, III
General Counsel

APPROVED AS TO TERMS AND CONDITIONS:

_____
Signature

_____
Print Name

_____
Title

ATTEST:

_____
Corporate Secretary

WITNESS:

1. _____

2. _____

CONTRACTOR:

_____
Authorized Signature

_____
Print Name

_____
Title

_____
Date

(Affix Corporate Seal)

SCOPE OF WORK

EXHIBIT "B"

FEE SCHEDULE

ATTACHMENTS CONTINUED

ATTACHMENT "B"

SOLID WASTE AUTHORITY
OF PALM BEACH COUNTY

7501 North Jog Road
West Palm Beach, Florida 33412
Telephone: 561-640-4000 • Fax: 561-640-3400

TASK ORDER
DISASTER DEBRIS MANAGEMENT

TO_____
Task Order No.

In accordance with _____(Contractor) contract, with the Solid Waste Authority of PBC, Florida, (AUTHORITY) Agreement No._____ for Hurricane/Disaster Debris Removal, Reduction, and Disposal dated _____ the AUTHORITY hereby requests and authorizes the services to be performed on the project as described below:

Project: _____

Specific Work to be performed: _____

Duration of Work (Include Start Date, End Date and Total Calendar Days): _____

Method of Payment: _____

Estimated Cost of this Task Order: $_____

Contractor Signature: _____ Date: _____

AUTHORITY Signature: _____ Date: _____

SWA Use Only					
SWA Requestor/Monitor:				Date:	
SWA Dept. Director:				Date:	
Vendor No.:		Account No.:		Project:	
Purchasing:		Budget:		Accounting:	

ATTACHMENT "C"
PRE-APPROVED TEMPORARY DEBRIS MANAGEMENT SITES MAP

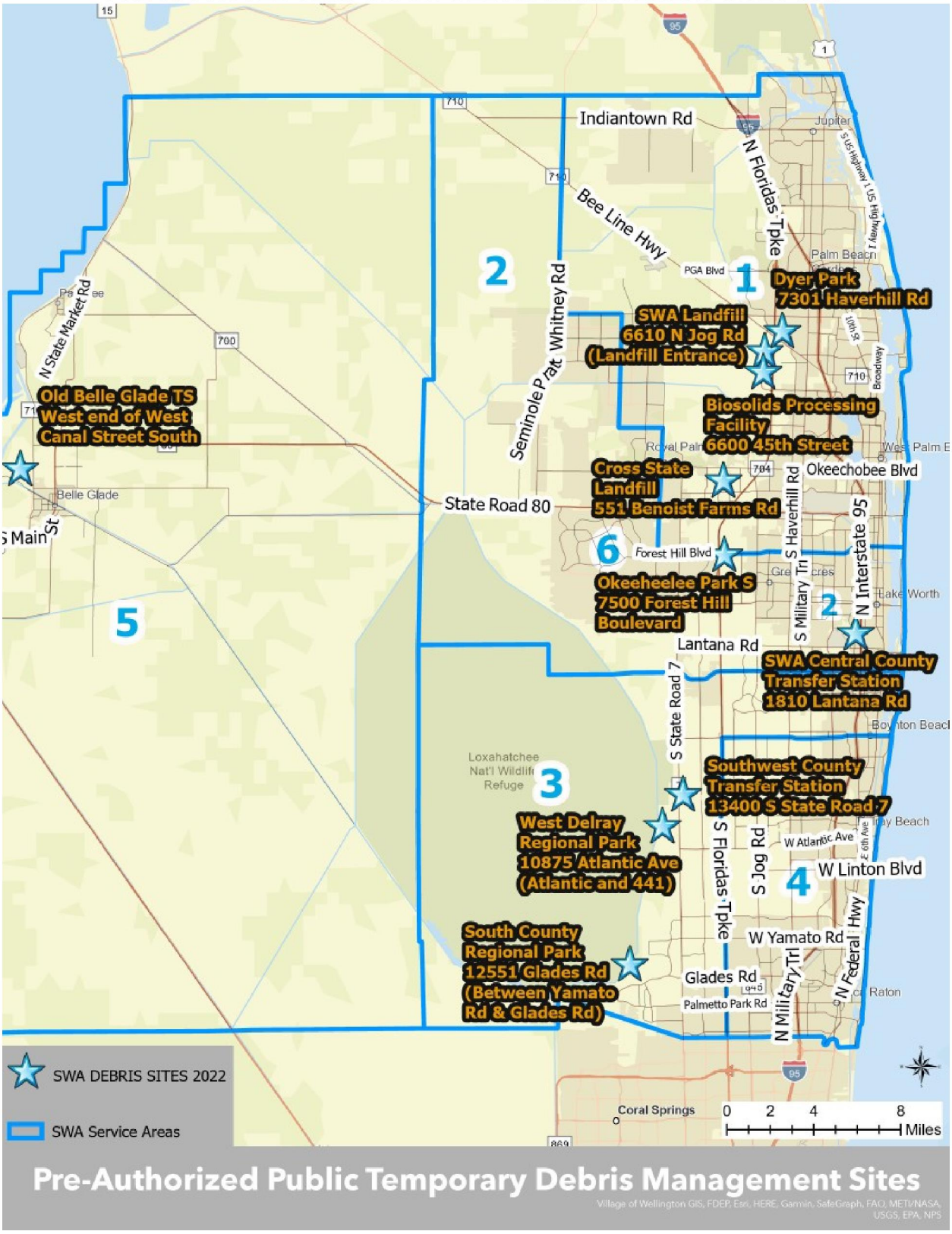

ATTACHMENT "D"

PUBLIC ASSISTANCE PROGRAM AND POLICY GUIDE

The Public Assistance Program and Policy Guide, Version 4, Effective June 1, 2020 (see hyperlink below) is the most recent reference material that will provide additional information:
https://www.fema.gov/sites/default/files/documents/fema_pappg-v4-updated-links_policy_6-1-2020.pdf

PROJECT MANAGEMENT

Project management begins when a disaster occurs and does not end until an applicant has received final payment for the project. Good project management ensures successful recovery from the disaster, expedited payment of funds, and more efficient close-outs of PA Program grants.

Record Keeping

It is critical that the applicant establish and maintain accurate records of events and expenditures related to disaster recovery work. The information required for documentation describes the "who, what, when, where, why, and how much" for each item of disaster recovery work. The applicant should have a financial and record keeping system in place that can be used to track these elements. The importance of maintaining a complete and accurate set of records for each project cannot be over-emphasized. Good documentation facilitates the project formulation, validation, approval, and funding processes.

All of the documentation pertaining to a project should be filed with the corresponding *PW* and maintained by the applicant as the permanent record of the project. These records become the basis for verification of the accuracy of project cost estimates during validation of small projects, reconciliation of costs for large projects, and audits.

Applicants should begin the record keeping process before a disaster is declared by the President. To ensure that work performed both before and after a disaster declaration is well documented, potential applicants should:

- designate a person to coordinate the compilation and filing of records;
- establish a file for each site where work has been or will be performed; and
- maintain accurate disbursement and accounting records to document the work performed and the costs incurred.

The Federal Office of Management and Budget requires grant recipients to maintain financial and program records on file for three years following final payment. Records of grant recipients may be subject to the provisions of the Single Audit Act, as described on page 117 of this guide. Applicants may refer to the Applicant Handbook, FEMA 323, for additional information regarding record-keeping.

ATTACHMENT "E"

MOBILIZATION SCHEDULE

CONTRACTOR shall commence mobilization of equipment, operators, and laborers immediately upon receipt of a Mobilization Task Order to meet the progress pattern set below.

	Category 1 & 2	Category 3	Category 4	Category 5
Within 24 hours	25%	25%	20%	15%
Within 48 hours	30%	30%	30%	25%
Within 72 hours	40%	40%	40%	40%
Within 96 hours	60%	60%	50%	50%
Within 5 days	100%	80%	60%	60%
Within 10 days		100%	80%	70%
Within 14 days			100%	80%
Within 20 days				100%

ATTACHMENT "F"

FHWA-1273

FHWA-1273 – Revised May 1, 2012

REQUIRED CONTRACT PROVISIONS
FEDERAL-AID CONSTRUCTION CONTRACTS

I. General
II. Nondiscrimination
III. Nonsegregated Facilities
IV. Davis-Bacon and Related Act Provisions
V. Contract Work Hours and Safety Standards Act Provisions
VI. Subletting or Assigning the Contract
VII. Safety: Accident Prevention
VIII. False Statements Concerning Highway Projects
IX. Implementation of Clean Air Act and Federal Water Pollution Control Act
X. Compliance with Governmentwide Suspension and Debarment Requirements
XI. Certification Regarding Use of Contract Funds for Lobbying

ATTACHMENTS

A. Employment and Materials Preference for Appalachian Development Highway System or Appalachian Local Access Road Contracts (included in Appalachian contracts only)

I. GENERAL

1. Form FHWA-1273 must be physically incorporated in each construction contract funded under Title 23 (excluding emergency contracts solely intended for debris removal). The contractor (or subcontractor) must insert this form in each subcontract and further require its inclusion in all lower tier subcontracts (excluding purchase orders, rental agreements and other agreements for supplies or services).

The applicable requirements of Form FHWA-1273 are incorporated by reference for work done under any purchase order, rental agreement or agreement for other services. The prime contractor shall be responsible for compliance by any subcontractor, lower-tier subcontractor or service provider.

Form FHWA-1273 must be included in all Federal-aid design-build contracts, in all subcontracts and in lower tier subcontracts (excluding subcontracts for design services, purchase orders, rental agreements and other agreements for supplies or services). The design-builder shall be responsible for compliance by any subcontractor, lower-tier subcontractor or service provider.

Contracting agencies may reference Form FHWA-1273 in bid proposal or request for proposal documents, however, the Form FHWA-1273 must be physically incorporated (not referenced) in all contracts, subcontracts and lower-tier subcontracts (excluding purchase orders, rental agreements and other agreements for supplies or services related to a construction contract).

2. Subject to the applicability criteria noted in the following sections, these contract provisions shall apply to all work performed on the contract by the contractor's own organization and with the assistance of workers under the contractor's immediate superintendence and to all work performed on the contract by piecework, station work, or by subcontract.

3. A breach of any of the stipulations contained in these Required Contract Provisions may be sufficient grounds for withholding of progress payments, withholding of final payment, termination of the contract, suspension / debarment or any other action determined to be appropriate by the contracting agency and FHWA.

4. Selection of Labor: During the performance of this contract, the contractor shall not use convict labor for any purpose within the limits of a construction project on a Federal-aid highway unless it is labor performed by convicts who are on parole, supervised release, or probation. The term Federal-aid highway does not include roadways functionally classified as local roads or rural minor collectors.

II. NONDISCRIMINATION

The provisions of this section related to 23 CFR Part 230 are applicable to all Federal-aid construction contracts and to all related construction subcontracts of $10,000 or more. The provisions of 23 CFR Part 230 are not applicable to material supply, engineering, or architectural service contracts.

In addition, the contractor and all subcontractors must comply with the following policies: Executive Order 11246, 41 CFR 60, 29 CFR 1625-1627, Title 23 USC Section 140, the Rehabilitation Act of 1973, as amended (29 USC 794), Title VI of the Civil Rights Act of 1964, as amended, and related regulations including 49 CFR Parts 21, 26 and 27; and 23 CFR Parts 200, 230, and 633.

The contractor and all subcontractors must comply with: the requirements of the Equal Opportunity Clause in 41 CFR 60-1.4(b) and, for all construction contracts exceeding $10,000, the Standard Federal Equal Employment Opportunity Construction Contract Specifications in 41 CFR 60-4.3.

Note: The U.S. Department of Labor has exclusive authority to determine compliance with Executive Order 11246 and the policies of the Secretary of Labor including 41 CFR 60, and 29 CFR 1625-1627. The contracting agency and the FHWA have the authority and the responsibility to ensure compliance with Title 23 USC Section 140, the Rehabilitation Act of 1973, as amended (29 USC 794), and Title VI of the Civil Rights Act of 1964, as amended, and related regulations including 49 CFR Parts 21, 26 and 27; and 23 CFR Parts 200, 230, and 633.

The following provision is adopted from 23 CFR 230, Appendix A, with appropriate revisions to conform to the U.S. Department of Labor (US DOL) and FHWA requirements.

1. **Equal Employment Opportunity**: Equal employment opportunity (EEO) requirements not to discriminate and to take affirmative action to assure equal opportunity as set forth under laws, executive orders, rules, regulations (28 CFR 35, 29 CFR 1630, 29 CFR 1625-1627, 41 CFR 60 and 49 CFR 27) and orders of the Secretary of Labor as modified by the provisions prescribed herein, and imposed pursuant to 23 U.S.C. 140 shall constitute the EEO and specific affirmative action standards for the contractor's project activities under

this contract. The provisions of the Americans with Disabilities Act of 1990 (42 U.S.C. 12101 et seq.) set forth under 28 CFR 35 and 29 CFR 1630 are incorporated by reference in this contract. In the execution of this contract, the contractor agrees to comply with the following minimum specific requirement activities of EEO:

a. The contractor will work with the contracting agency and the Federal Government to ensure that it has made every good faith effort to provide equal opportunity with respect to all of its terms and conditions of employment and in their review of activities under the contract.

b. The contractor will accept as its operating policy the following statement:

"It is the policy of this Company to assure that applicants are employed, and that employees are treated during employment, without regard to their race, religion, sex, color, national origin, age or disability. Such action shall include: employment, upgrading, demotion, or transfer; recruitment or recruitment advertising; layoff or termination; rates of pay or other forms of compensation; and selection for training, including apprenticeship, pre-apprenticeship, and/or on-the-job training."

2. EEO Officer: The contractor will designate and make known to the contracting officers an EEO Officer who will have the responsibility for and must be capable of effectively administering and promoting an active EEO program and who must be assigned adequate authority and responsibility to do so.

3. Dissemination of Policy: All members of the contractor's staff who are authorized to hire, supervise, promote, and discharge employees, or who recommend such action, or who are substantially involved in such action, will be made fully cognizant of, and will implement, the contractor's EEO policy and contractual responsibilities to provide EEO in each grade and classification of employment. To ensure that the above agreement will be met, the following actions will be taken as a minimum:

a. Periodic meetings of supervisory and personnel office employees will be conducted before the start of work and then not less often than once every six months, at which time the contractor's EEO policy and its implementation will be reviewed and explained. The meetings will be conducted by the EEO Officer.

b. All new supervisory or personnel office employees will be given a thorough indoctrination by the EEO Officer, covering all major aspects of the contractor's EEO obligations within thirty days following their reporting for duty with the contractor.

c. All personnel who are engaged in direct recruitment for the project will be instructed by the EEO Officer in the contractor's procedures for locating and hiring minorities and women.

d. Notices and posters setting forth the contractor's EEO policy will be placed in areas readily accessible to employees, applicants for employment and potential employees.

e. The contractor's EEO policy and the procedures to implement such policy will be brought to the attention of employees by means of meetings, employee handbooks, or other appropriate means.

4. Recruitment: When advertising for employees, the contractor will include in all advertisements for employees the notation: "An Equal Opportunity Employer." All such advertisements will be placed in publications having a large circulation among minorities and women in the area from which the project work force would normally be derived.

a. The contractor will, unless precluded by a valid bargaining agreement, conduct systematic and direct recruitment through public and private employee referral sources likely to yield qualified minorities and women. To meet this requirement, the contractor will identify sources of potential minority group employees, and establish with such identified sources procedures whereby minority and women applicants may be referred to the contractor for employment consideration.

b. In the event the contractor has a valid bargaining agreement providing for exclusive hiring hall referrals, the contractor is expected to observe the provisions of that agreement to the extent that the system meets the contractor's compliance with EEO contract provisions. Where implementation of such an agreement has the effect of discriminating against minorities or women, or obligates the contractor to do the same, such implementation violates Federal nondiscrimination provisions.

c. The contractor will encourage its present employees to refer minorities and women as applicants for employment. Information and procedures with regard to referring such applicants will be discussed with employees.

5. Personnel Actions: Wages, working conditions, and employee benefits shall be established and administered, and personnel actions of every type, including hiring, upgrading, promotion, transfer, demotion, layoff, and termination, shall be taken without regard to race, color, religion, sex, national origin, age or disability. The following procedures shall be followed:

a. The contractor will conduct periodic inspections of project sites to insure that working conditions and employee facilities do not indicate discriminatory treatment of project site personnel.

b. The contractor will periodically evaluate the spread of wages paid within each classification to determine any evidence of discriminatory wage practices.

c. The contractor will periodically review selected personnel actions in depth to determine whether there is evidence of discrimination. Where evidence is found, the contractor will promptly take corrective action. If the review indicates that the discrimination may extend beyond the actions reviewed, such corrective action shall include all affected persons.

d. The contractor will promptly investigate all complaints of alleged discrimination made to the contractor in connection with its obligations under this contract, will attempt to resolve such complaints, and will take appropriate corrective action within a reasonable time. If the investigation indicates that the discrimination may affect persons other than the complainant, such corrective action shall include such other persons. Upon completion of each investigation, the contractor will inform every complainant of all of their avenues of appeal.

6. Training and Promotion:

a. The contractor will assist in locating, qualifying, and increasing the skills of minorities and women who are

applicants for employment or current employees. Such efforts should be aimed at developing full journey level status employees in the type of trade or job classification involved.

b. Consistent with the contractor's work force requirements and as permissible under Federal and State regulations, the contractor shall make full use of training programs, i.e., apprenticeship, and on-the-job training programs for the geographical area of contract performance. In the event a special provision for training is provided under this contract, this subparagraph will be superseded as indicated in the special provision. The contracting agency may reserve training positions for persons who receive welfare assistance in accordance with 23 U.S.C. 140(a).

c. The contractor will advise employees and applicants for employment of available training programs and entrance requirements for each.

d. The contractor will periodically review the training and promotion potential of employees who are minorities and women and will encourage eligible employees to apply for such training and promotion.

7. Unions: If the contractor relies in whole or in part upon unions as a source of employees, the contractor will use good faith efforts to obtain the cooperation of such unions to increase opportunities for minorities and women. Actions by the contractor, either directly or through a contractor's association acting as agent, will include the procedures set forth below:

a. The contractor will use good faith efforts to develop, in cooperation with the unions, joint training programs aimed toward qualifying more minorities and women for membership in the unions and increasing the skills of minorities and women so that they may qualify for higher paying employment.

b. The contractor will use good faith efforts to incorporate an EEO clause into each union agreement to the end that such union will be contractually bound to refer applicants without regard to their race, color, religion, sex, national origin, age or disability.

c. The contractor is to obtain information as to the referral practices and policies of the labor union except that to the extent such information is within the exclusive possession of the labor union and such labor union refuses to furnish such information to the contractor, the contractor shall so certify to the contracting agency and shall set forth what efforts have been made to obtain such information.

d. In the event the union is unable to provide the contractor with a reasonable flow of referrals within the time limit set forth in the collective bargaining agreement, the contractor will, through independent recruitment efforts, fill the employment vacancies without regard to race, color, religion, sex, national origin, age or disability; making full efforts to obtain qualified and/or qualifiable minorities and women. The failure of a union to provide sufficient referrals (even though it is obligated to provide exclusive referrals under the terms of a collective bargaining agreement) does not relieve the contractor from the requirements of this paragraph. In the event the union referral practice prevents the contractor from meeting the obligations pursuant to Executive Order 11246, as amended, and these special provisions, such contractor shall immediately notify the contracting agency.

8. Reasonable Accommodation for Applicants / Employees with Disabilities: The contractor must be familiar with the requirements for and comply with the Americans with Disabilities Act and all rules and regulations established there under. Employers must provide reasonable accommodation in all employment activities unless to do so would cause an undue hardship.

9. Selection of Subcontractors, Procurement of Materials and Leasing of Equipment: The contractor shall not discriminate on the grounds of race, color, religion, sex, national origin, age or disability in the selection and retention of subcontractors, including procurement of materials and leases of equipment. The contractor shall take all necessary and reasonable steps to ensure nondiscrimination in the administration of this contract.

a. The contractor shall notify all potential subcontractors and suppliers and lessors of their EEO obligations under this contract.

b. The contractor will use good faith efforts to ensure subcontractor compliance with their EEO obligations.

10. Assurance Required by 49 CFR 26.13(b):

a. The requirements of 49 CFR Part 26 and the State DOT's U.S. DOT-approved DBE program are incorporated by reference.

b. The contractor or subcontractor shall not discriminate on the basis of race, color, national origin, or sex in the performance of this contract. The contractor shall carry out applicable requirements of 49 CFR Part 26 in the award and administration of DOT-assisted contracts. Failure by the contractor to carry out these requirements is a material breach of this contract, which may result in the termination of this contract or such other remedy as the contracting agency deems appropriate.

11. Records and Reports: The contractor shall keep such records as necessary to document compliance with the EEO requirements. Such records shall be retained for a period of three years following the date of the final payment to the contractor for all contract work and shall be available at reasonable times and places for inspection by authorized representatives of the contracting agency and the FHWA.

a. The records kept by the contractor shall document the following:

(1) The number and work hours of minority and non-minority group members and women employed in each work classification on the project;

(2) The progress and efforts being made in cooperation with unions, when applicable, to increase employment opportunities for minorities and women; and

(3) The progress and efforts being made in locating, hiring, training, qualifying, and upgrading minorities and women;

b. The contractors and subcontractors will submit an annual report to the contracting agency each July for the duration of the project, indicating the number of minority, women, and non-minority group employees currently engaged in each work classification required by the contract work. This information is to be reported on Form FHWA-1391. The staffing data should represent the project work force on board in all or any part of the last payroll period preceding the end of July. If on-the-job training is being required by special provision, the contractor

will be required to collect and report training data. The employment data should reflect the work force on board during all or any part of the last payroll period preceding the end of July.

III. NONSEGREGATED FACILITIES

This provision is applicable to all Federal-aid construction contracts and to all related construction subcontracts of $10,000 or more.

The contractor must ensure that facilities provided for employees are provided in such a manner that segregation on the basis of race, color, religion, sex, or national origin cannot result. The contractor may neither require such segregated use by written or oral policies nor tolerate such use by employee custom. The contractor's obligation extends further to ensure that its employees are not assigned to perform their services at any location, under the contractor's control, where the facilities are segregated. The term "facilities" includes waiting rooms, work areas, restaurants and other eating areas, time clocks, restrooms, washrooms, locker rooms, and other storage or dressing areas, parking lots, drinking fountains, recreation or entertainment areas, transportation, and housing provided for employees. The contractor shall provide separate or single-user restrooms and necessary dressing or sleeping areas to assure privacy between sexes.

IV. DAVIS-BACON AND RELATED ACT PROVISIONS

This section is applicable to all Federal-aid construction projects exceeding $2,000 and to all related subcontracts and lower-tier subcontracts (regardless of subcontract size). The requirements apply to all projects located within the right-of-way of a roadway that is functionally classified as Federal-aid highway. This excludes roadways functionally classified as local roads or rural minor collectors, which are exempt. Contracting agencies may elect to apply these requirements to other projects.

The following provisions are from the U.S. Department of Labor regulations in 29 CFR 5.5 "Contract provisions and related matters" with minor revisions to conform to the FHWA-1273 format and FHWA program requirements.

1. Minimum wages

a. All laborers and mechanics employed or working upon the site of the work, will be paid unconditionally and not less often than once a week, and without subsequent deduction or rebate on any account (except such payroll deductions as are permitted by regulations issued by the Secretary of Labor under the Copeland Act (29 CFR part 3)), the full amount of wages and bona fide fringe benefits (or cash equivalents thereof) due at time of payment computed at rates not less than those contained in the wage determination of the Secretary of Labor which is attached hereto and made a part hereof, regardless of any contractual relationship which may be alleged to exist between the contractor and such laborers and mechanics.

Contributions made or costs reasonably anticipated for bona fide fringe benefits under section 1(b)(2) of the Davis-Bacon Act on behalf of laborers or mechanics are considered wages paid to such laborers or mechanics, subject to the provisions of paragraph 1.d. of this section; also, regular contributions made or costs incurred for more than a weekly period (but not less often than quarterly) under plans, funds, or programs which cover the particular weekly period, are deemed to be constructively made or incurred during such weekly period. Such laborers and mechanics shall be paid the appropriate wage rate and fringe benefits on the wage determination for the classification of work actually performed, without regard to skill, except as provided in 29 CFR 5.5(a)(4). Laborers or mechanics performing work in more than one classification may be compensated at the rate specified for each classification for the time actually worked therein: Provided, That the employer's payroll records accurately set forth the time spent in each classification in which work is performed. The wage determination (including any additional classification and wage rates conformed under paragraph 1.b. of this section) and the Davis-Bacon poster (WH–1321) shall be posted at all times by the contractor and its subcontractors at the site of the work in a prominent and accessible place where it can be easily seen by the workers.

b.(1) The contracting officer shall require that any class of laborers or mechanics, including helpers, which is not listed in the wage determination and which is to be employed under the contract shall be classified in conformance with the wage determination. The contracting officer shall approve an additional classification and wage rate and fringe benefits therefore only when the following criteria have been met:

(i) The work to be performed by the classification requested is not performed by a classification in the wage determination; and

(ii) The classification is utilized in the area by the construction industry; and

(iii) The proposed wage rate, including any bona fide fringe benefits, bears a reasonable relationship to the wage rates contained in the wage determination.

(2) If the contractor and the laborers and mechanics to be employed in the classification (if known), or their representatives, and the contracting officer agree on the classification and wage rate (including the amount designated for fringe benefits where appropriate), a report of the action taken shall be sent by the contracting officer to the Administrator of the Wage and Hour Division, Employment Standards Administration, U.S. Department of Labor, Washington, DC 20210. The Administrator, or an authorized representative, will approve, modify, or disapprove every additional classification action within 30 days of receipt and so advise the contracting officer or will notify the contracting officer within the 30-day period that additional time is necessary.

(3) In the event the contractor, the laborers or mechanics to be employed in the classification or their representatives, and the contracting officer do not agree on the proposed classification and wage rate (including the amount designated for fringe benefits, where appropriate), the contracting officer shall refer the questions, including the views of all interested parties and the recommendation of the contracting officer, to the Wage and Hour Administrator for determination. The Wage and Hour Administrator, or an authorized representative, will issue a determination within 30 days of receipt and so advise the contracting officer or

will notify the contracting officer within the 30-day period that additional time is necessary.

(4) The wage rate (including fringe benefits where appropriate) determined pursuant to paragraphs 1.b.(2) or 1.b.(3) of this section, shall be paid to all workers performing work in the classification under this contract from the first day on which work is performed in the classification.

c. Whenever the minimum wage rate prescribed in the contract for a class of laborers or mechanics includes a fringe benefit which is not expressed as an hourly rate, the contractor shall either pay the benefit as stated in the wage determination or shall pay another bona fide fringe benefit or an hourly cash equivalent thereof.

d. If the contractor does not make payments to a trustee or other third person, the contractor may consider as part of the wages of any laborer or mechanic the amount of any costs reasonably anticipated in providing bona fide fringe benefits under a plan or program, Provided, That the Secretary of Labor has found, upon the written request of the contractor, that the applicable standards of the Davis-Bacon Act have been met. The Secretary of Labor may require the contractor to set aside in a separate account assets for the meeting of obligations under the plan or program.

2. Withholding

The contracting agency shall upon its own action or upon written request of an authorized representative of the Department of Labor, withhold or cause to be withheld from the contractor under this contract, or any other Federal contract with the same prime contractor, or any other federally-assisted contract subject to Davis-Bacon prevailing wage requirements, which is held by the same prime contractor, so much of the accrued payments or advances as may be considered necessary to pay laborers and mechanics, including apprentices, trainees, and helpers, employed by the contractor or any subcontractor the full amount of wages required by the contract. In the event of failure to pay any laborer or mechanic, including any apprentice, trainee, or helper, employed or working on the site of the work, all or part of the wages required by the contract, the contracting agency may, after written notice to the contractor, take such action as may be necessary to cause the suspension of any further payment, advance, or guarantee of funds until such violations have ceased.

3. Payrolls and basic records

a. Payrolls and basic records relating thereto shall be maintained by the contractor during the course of the work and preserved for a period of three years thereafter for all laborers and mechanics working at the site of the work. Such records shall contain the name, address, and social security number of each such worker, his or her correct classification, hourly rates of wages paid (including rates of contributions or costs anticipated for bona fide fringe benefits or cash equivalents thereof of the types described in section 1(b)(2)(B) of the Davis-Bacon Act), daily and weekly number of hours worked, deductions made and actual wages paid. Whenever the Secretary of Labor has found under 29 CFR 5.5(a)(1)(iv) that the wages of any laborer or mechanic include the amount of any costs reasonably anticipated in providing benefits under a plan or program described in section 1(b)(2)(B) of the Davis-Bacon Act, the contractor shall maintain records which show that the commitment to provide such benefits is enforceable, that the plan or program is financially responsible, and that the plan or program has been communicated in writing to the laborers or mechanics affected, and records which show the costs anticipated or the actual cost incurred in providing such benefits. Contractors employing apprentices or trainees under approved programs shall maintain written evidence of the registration of apprenticeship programs and certification of trainee programs, the registration of the apprentices and trainees, and the ratios and wage rates prescribed in the applicable programs.

b.(1) The contractor shall submit weekly for each week in which any contract work is performed a copy of all payrolls to the contracting agency. The payrolls submitted shall set out accurately and completely all of the information required to be maintained under 29 CFR 5.5(a)(3)(i), except that full social security numbers and home addresses shall not be included on weekly transmittals. Instead the payrolls shall only need to include an individually identifying number for each employee (e.g. , the last four digits of the employee's social security number). The required weekly payroll information may be submitted in any form desired. Optional Form WH–347 is available for this purpose from the Wage and Hour Division Web site at http://www.dol.gov/esa/whd/forms/wh347instr.htm or its successor site. The prime contractor is responsible for the submission of copies of payrolls by all subcontractors. Contractors and subcontractors shall maintain the full social security number and current address of each covered worker, and shall provide them upon request to the contracting agency for transmission to the State DOT, the FHWA or the Wage and Hour Division of the Department of Labor for purposes of an investigation or audit of compliance with prevailing wage requirements. It is not a violation of this section for a prime contractor to require a subcontractor to provide addresses and social security numbers to the prime contractor for its own records, without weekly submission to the contracting agency..

(2) Each payroll submitted shall be accompanied by a "Statement of Compliance," signed by the contractor or subcontractor or his or her agent who pays or supervises the payment of the persons employed under the contract and shall certify the following:

(i) That the payroll for the payroll period contains the information required to be provided under §5.5 (a)(3)(ii) of Regulations, 29 CFR part 5, the appropriate information is being maintained under §5.5 (a)(3)(i) of Regulations, 29 CFR part 5, and that such information is correct and complete;

(ii) That each laborer or mechanic (including each helper, apprentice, and trainee) employed on the contract during the payroll period has been paid the full weekly wages earned, without rebate, either directly or indirectly, and that no deductions have been made either directly or indirectly from the full wages earned, other than permissible deductions as set forth in Regulations, 29 CFR part 3;

(iii) That each laborer or mechanic has been paid not less than the applicable wage rates and fringe benefits or cash equivalents for the classification of work performed, as specified in the applicable wage determination incorporated into the contract.

(3) The weekly submission of a properly executed certification set forth on the reverse side of Optional Form WH–347 shall satisfy the requirement for submission of the "Statement of Compliance" required by paragraph 3.b.(2) of this section.

(4) The falsification of any of the above certifications may subject the contractor or subcontractor to civil or criminal prosecution under section 1001 of title 18 and section 231 of title 31 of the United States Code.

c. The contractor or subcontractor shall make the records required under paragraph 3.a. of this section available for inspection, copying, or transcription by authorized representatives of the contracting agency, the State DOT, the FHWA, or the Department of Labor, and shall permit such representatives to interview employees during working hours on the job. If the contractor or subcontractor fails to submit the required records or to make them available, the FHWA may, after written notice to the contractor, the contracting agency or the State DOT, take such action as may be necessary to cause the suspension of any further payment, advance, or guarantee of funds. Furthermore, failure to submit the required records upon request or to make such records available may be grounds for debarment action pursuant to 29 CFR 5.12.

4. Apprentices and trainees

a. Apprentices (programs of the USDOL).

Apprentices will be permitted to work at less than the predetermined rate for the work they performed when they are employed pursuant to and individually registered in a bona fide apprenticeship program registered with the U.S. Department of Labor, Employment and Training Administration, Office of Apprenticeship Training, Employer and Labor Services, or with a State Apprenticeship Agency recognized by the Office, or if a person is employed in his or her first 90 days of probationary employment as an apprentice in such an apprenticeship program, who is not individually registered in the program, but who has been certified by the Office of Apprenticeship Training, Employer and Labor Services or a State Apprenticeship Agency (where appropriate) to be eligible for probationary employment as an apprentice.

The allowable ratio of apprentices to journeymen on the job site in any craft classification shall not be greater than the ratio permitted to the contractor as to the entire work force under the registered program. Any worker listed on a payroll at an apprentice wage rate, who is not registered or otherwise employed as stated above, shall be paid not less than the applicable wage rate on the wage determination for the classification of work actually performed. In addition, any apprentice performing work on the job site in excess of the ratio permitted under the registered program shall be paid not less than the applicable wage rate on the wage determination for the work actually performed. Where a contractor is performing construction on a project in a locality other than that in which its program is registered, the ratios and wage rates (expressed in percentages of the journeyman's hourly rate) specified in the contractor's or subcontractor's registered program shall be observed.

Every apprentice must be paid at not less than the rate specified in the registered program for the apprentice's level of progress, expressed as a percentage of the journeymen hourly rate specified in the applicable wage determination. Apprentices shall be paid fringe benefits in accordance with the provisions of the apprenticeship program. If the apprenticeship program does not specify fringe benefits, apprentices must be paid the full amount of fringe benefits listed on the wage determination for the applicable classification. If the Administrator determines that a different practice prevails for the applicable apprentice classification, fringes shall be paid in accordance with that determination.

In the event the Office of Apprenticeship Training, Employer and Labor Services, or a State Apprenticeship Agency recognized by the Office, withdraws approval of an apprenticeship program, the contractor will no longer be permitted to utilize apprentices at less than the applicable predetermined rate for the work performed until an acceptable program is approved.

b. Trainees (programs of the USDOL).

Except as provided in 29 CFR 5.16, trainees will not be permitted to work at less than the predetermined rate for the work performed unless they are employed pursuant to and individually registered in a program which has received prior approval, evidenced by formal certification by the U.S. Department of Labor, Employment and Training Administration.

The ratio of trainees to journeymen on the job site shall not be greater than permitted under the plan approved by the Employment and Training Administration.

Every trainee must be paid at not less than the rate specified in the approved program for the trainee's level of progress, expressed as a percentage of the journeyman hourly rate specified in the applicable wage determination. Trainees shall be paid fringe benefits in accordance with the provisions of the trainee program. If the trainee program does not mention fringe benefits, trainees shall be paid the full amount of fringe benefits listed on the wage determination unless the Administrator of the Wage and Hour Division determines that there is an apprenticeship program associated with the corresponding journeyman wage rate on the wage determination which provides for less than full fringe benefits for apprentices. Any employee listed on the payroll at a trainee rate who is not registered and participating in a training plan approved by the Employment and Training Administration shall be paid not less than the applicable wage rate on the wage determination for the classification of work actually performed. In addition, any trainee performing work on the job site in excess of the ratio permitted under the registered program shall be paid not less than the applicable wage rate on the wage determination for the work actually performed.

In the event the Employment and Training Administration withdraws approval of a training program, the contractor will no longer be permitted to utilize trainees at less than the applicable predetermined rate for the work performed until an acceptable program is approved.

c. Equal employment opportunity. The utilization of apprentices, trainees and journeymen under this part shall be in conformity with the equal employment opportunity requirements of Executive Order 11246, as amended, and 29 CFR part 30.

d. Apprentices and Trainees (programs of the U.S. DOT).

Apprentices and trainees working under apprenticeship and skill training programs which have been certified by the Secretary of Transportation as promoting EEO in connection with Federal-aid highway construction programs are not subject to the requirements of paragraph 4 of this Section IV. The straight time hourly wage rates for apprentices and trainees under such programs will be established by the particular programs. The ratio of apprentices and trainees to journeymen shall not be greater than permitted by the terms of the particular program.

5. Compliance with Copeland Act requirements. The contractor shall comply with the requirements of 29 CFR part 3, which are incorporated by reference in this contract.

6. Subcontracts. The contractor or subcontractor shall insert Form FHWA-1273 in any subcontracts and also require the subcontractors to include Form FHWA-1273 in any lower tier subcontracts. The prime contractor shall be responsible for the compliance by any subcontractor or lower tier subcontractor with all the contract clauses in 29 CFR 5.5.

7. Contract termination: debarment. A breach of the contract clauses in 29 CFR 5.5 may be grounds for termination of the contract, and for debarment as a contractor and a subcontractor as provided in 29 CFR 5.12.

8. Compliance with Davis-Bacon and Related Act requirements. All rulings and interpretations of the Davis-Bacon and Related Acts contained in 29 CFR parts 1, 3, and 5 are herein incorporated by reference in this contract.

9. Disputes concerning labor standards. Disputes arising out of the labor standards provisions of this contract shall not be subject to the general disputes clause of this contract. Such disputes shall be resolved in accordance with the procedures of the Department of Labor set forth in 29 CFR parts 5, 6, and 7. Disputes within the meaning of this clause include disputes between the contractor (or any of its subcontractors) and the contracting agency, the U.S. Department of Labor, or the employees or their representatives.

10. Certification of eligibility.

a. By entering into this contract, the contractor certifies that neither it (nor he or she) nor any person or firm who has an interest in the contractor's firm is a person or firm ineligible to be awarded Government contracts by virtue of section 3(a) of the Davis-Bacon Act or 29 CFR 5.12(a)(1).

b. No part of this contract shall be subcontracted to any person or firm ineligible for award of a Government contract by virtue of section 3(a) of the Davis-Bacon Act or 29 CFR 5.12(a)(1).

c. The penalty for making false statements is prescribed in the U.S. Criminal Code, 18 U.S.C. 1001.

V. CONTRACT WORK HOURS AND SAFETY STANDARDS ACT

The following clauses apply to any Federal-aid construction contract in an amount in excess of $100,000 and subject to the overtime provisions of the Contract Work Hours and Safety Standards Act. These clauses shall be inserted in addition to the clauses required by 29 CFR 5.5(a) or 29 CFR 4.6. As used in this paragraph, the terms laborers and mechanics include watchmen and guards.

1. Overtime requirements. No contractor or subcontractor contracting for any part of the contract work which may require or involve the employment of laborers or mechanics shall require or permit any such laborer or mechanic in any workweek in which he or she is employed on such work to work in excess of forty hours in such workweek unless such laborer or mechanic receives compensation at a rate not less than one and one-half times the basic rate of pay for all hours worked in excess of forty hours in such workweek.

2. Violation; liability for unpaid wages; liquidated damages. In the event of any violation of the clause set forth in paragraph (1.) of this section, the contractor and any subcontractor responsible therefor shall be liable for the unpaid wages. In addition, such contractor and subcontractor shall be liable to the United States (in the case of work done under contract for the District of Columbia or a territory, to such District or to such territory), for liquidated damages. Such liquidated damages shall be computed with respect to each individual laborer or mechanic, including watchmen and guards, employed in violation of the clause set forth in paragraph (1.) of this section, in the sum of $10 for each calendar day on which such individual was required or permitted to work in excess of the standard workweek of forty hours without payment of the overtime wages required by the clause set forth in paragraph (1.) of this section.

3. Withholding for unpaid wages and liquidated damages. The FHWA or the contacting agency shall upon its own action or upon written request of an authorized representative of the Department of Labor withhold or cause to be withheld, from any moneys payable on account of work performed by the contractor or subcontractor under any such contract or any other Federal contract with the same prime contractor, or any other federally-assisted contract subject to the Contract Work Hours and Safety Standards Act, which is held by the same prime contractor, such sums as may be determined to be necessary to satisfy any liabilities of such contractor or subcontractor for unpaid wages and liquidated damages as provided in the clause set forth in paragraph (2.) of this section.

4. Subcontracts. The contractor or subcontractor shall insert in any subcontracts the clauses set forth in paragraph (1.) through (4.) of this section and also a clause requiring the subcontractors to include these clauses in any lower tier subcontracts. The prime contractor shall be responsible for compliance by any subcontractor or lower tier subcontractor with the clauses set forth in paragraphs (1.) through (4.) of this section.

VI. SUBLETTING OR ASSIGNING THE CONTRACT

This provision is applicable to all Federal-aid construction contracts on the National Highway System.

1. The contractor shall perform with its own organization contract work amounting to not less than 30 percent (or a greater percentage if specified elsewhere in the contract) of the total original contract price, excluding any specialty items designated by the contracting agency. Specialty items may be performed by subcontract and the amount of any such specialty items performed may be deducted from the total original contract price before computing the amount of work required to be performed by the contractor's own organization (23 CFR 635.116).

a. The term "perform work with its own organization" refers to workers employed or leased by the prime contractor, and equipment owned or rented by the prime contractor, with or without operators. Such term does not include employees or equipment of a subcontractor or lower tier subcontractor, agents of the prime contractor, or any other assignees. The term may include payments for the costs of hiring leased employees from an employee leasing firm meeting all relevant Federal and State regulatory requirements. Leased employees may only be included in this term if the prime contractor meets all of the following conditions:

(1) the prime contractor maintains control over the supervision of the day-to-day activities of the leased employees;
(2) the prime contractor remains responsible for the quality of the work of the leased employees;
(3) the prime contractor retains all power to accept or exclude individual employees from work on the project; and
(4) the prime contractor remains ultimately responsible for the payment of predetermined minimum wages, the submission of payrolls, statements of compliance and all other Federal regulatory requirements.

b. "Specialty Items" shall be construed to be limited to work that requires highly specialized knowledge, abilities, or equipment not ordinarily available in the type of contracting organizations qualified and expected to bid or propose on the contract as a whole and in general are to be limited to minor components of the overall contract.

2. The contract amount upon which the requirements set forth in paragraph (1) of Section VI is computed includes the cost of material and manufactured products which are to be purchased or produced by the contractor under the contract provisions.

3. The contractor shall furnish (a) a competent superintendent or supervisor who is employed by the firm, has full authority to direct performance of the work in accordance with the contract requirements, and is in charge of all construction operations (regardless of who performs the work) and (b) such other of its own organizational resources (supervision, management, and engineering services) as the contracting officer determines is necessary to assure the performance of the contract.

4. No portion of the contract shall be sublet, assigned or otherwise disposed of except with the written consent of the contracting officer, or authorized representative, and such consent when given shall not be construed to relieve the contractor of any responsibility for the fulfillment of the contract. Written consent will be given only after the contracting agency has assured that each subcontract is evidenced in writing and that it contains all pertinent provisions and requirements of the prime contract.

5. The 30% self-performance requirement of paragraph (1) is not applicable to design-build contracts; however, contracting agencies may establish their own self-performance requirements.

VII. SAFETY: ACCIDENT PREVENTION

This provision is applicable to all Federal-aid construction contracts and to all related subcontracts.

1. In the performance of this contract the contractor shall comply with all applicable Federal, State, and local laws governing safety, health, and sanitation (23 CFR 635). The contractor shall provide all safeguards, safety devices and protective equipment and take any other needed actions as it determines, or as the contracting officer may determine, to be reasonably necessary to protect the life and health of employees on the job and the safety of the public and to protect property in connection with the performance of the work covered by the contract.

2. It is a condition of this contract, and shall be made a condition of each subcontract, which the contractor enters into pursuant to this contract, that the contractor and any subcontractor shall not permit any employee, in performance of the contract, to work in surroundings or under conditions which are unsanitary, hazardous or dangerous to his/her health or safety, as determined under construction safety and health standards (29 CFR 1926) promulgated by the Secretary of Labor, in accordance with Section 107 of the Contract Work Hours and Safety Standards Act (40 U.S.C. 3704).

3. Pursuant to 29 CFR 1926.3, it is a condition of this contract that the Secretary of Labor or authorized representative thereof, shall have right of entry to any site of contract performance to inspect or investigate the matter of compliance with the construction safety and health standards and to carry out the duties of the Secretary under Section 107 of the Contract Work Hours and Safety Standards Act (40 U.S.C.3704).

VIII. FALSE STATEMENTS CONCERNING HIGHWAY PROJECTS

This provision is applicable to all Federal-aid construction contracts and to all related subcontracts.

In order to assure high quality and durable construction in conformity with approved plans and specifications and a high degree of reliability on statements and representations made by engineers, contractors, suppliers, and workers on Federal-aid highway projects, it is essential that all persons concerned with the project perform their functions as carefully, thoroughly, and honestly as possible. Willful falsification, distortion, or misrepresentation with respect to any facts related to the project is a violation of Federal law. To prevent any misunderstanding regarding the seriousness of these and similar acts, Form FHWA-1022 shall be posted on each Federal-aid highway project (23 CFR 635) in one or more places where it is readily available to all persons concerned with the project:

18 U.S.C. 1020 reads as follows:

"Whoever, being an officer, agent, or employee of the United States, or of any State or Territory, or whoever, whether a person, association, firm, or corporation, knowingly makes any false statement, false representation, or false report as to the character, quality, quantity, or cost of the material used or to be used, or the quantity or quality of the work performed or to be performed, or the cost thereof in connection with the submission of plans, maps, specifications, contracts, or costs of construction on any highway or related project submitted for approval to the Secretary of Transportation; or

Whoever knowingly makes any false statement, false representation, false report or false claim with respect to the character, quality, quantity, or cost of any work performed or to be performed, or materials furnished or to be furnished, in connection with the construction of any highway or related project approved by the Secretary of Transportation; or

Whoever knowingly makes any false statement or false representation as to material fact in any statement, certificate, or report submitted pursuant to provisions of the Federal-aid Roads Act approved July 1, 1916, (39 Stat. 355), as amended and supplemented;

Shall be fined under this title or imprisoned not more than 5 years or both."

IX. IMPLEMENTATION OF CLEAN AIR ACT AND FEDERAL WATER POLLUTION CONTROL ACT

This provision is applicable to all Federal-aid construction contracts and to all related subcontracts.

By submission of this bid/proposal or the execution of this contract, or subcontract, as appropriate, the bidder, proposer, Federal-aid construction contractor, or subcontractor, as appropriate, will be deemed to have stipulated as follows:

1. That any person who is or will be utilized in the performance of this contract is not prohibited from receiving an award due to a violation of Section 508 of the Clean Water Act or Section 306 of the Clean Air Act.
2. That the contractor agrees to include or cause to be included the requirements of paragraph (1) of this Section X in every subcontract, and further agrees to take such action as the contracting agency may direct as a means of enforcing such requirements.

X. CERTIFICATION REGARDING DEBARMENT, SUSPENSION, INELIGIBILITY AND VOLUNTARY EXCLUSION

This provision is applicable to all Federal-aid construction contracts, design-build contracts, subcontracts, lower-tier subcontracts, purchase orders, lease agreements, consultant contracts or any other covered transaction requiring FHWA approval or that is estimated to cost $25,000 or more – as defined in 2 CFR Parts 180 and 1200.

1. **Instructions for Certification – First Tier Participants:**

a. By signing and submitting this proposal, the prospective first tier participant is providing the certification set out below.

b. The inability of a person to provide the certification set out below will not necessarily result in denial of participation in this covered transaction. The prospective first tier participant shall submit an explanation of why it cannot provide the certification set out below. The certification or explanation will be considered in connection with the department or agency's determination whether to enter into this transaction. However, failure of the prospective first tier participant to furnish a certification or an explanation shall disqualify such a person from participation in this transaction.

c. The certification in this clause is a material representation of fact upon which reliance was placed when the contracting agency determined to enter into this transaction. If it is later determined that the prospective participant knowingly rendered an erroneous certification, in addition to other remedies available to the Federal Government, the contracting agency may terminate this transaction for cause of default.

d. The prospective first tier participant shall provide immediate written notice to the contracting agency to whom this proposal is submitted if any time the prospective first tier participant learns that its certification was erroneous when submitted or has become erroneous by reason of changed circumstances.

e. The terms "covered transaction," "debarred," "suspended," "ineligible," "participant," "person," "principal," and "voluntarily excluded," as used in this clause, are defined in 2 CFR Parts 180 and 1200. "First Tier Covered Transactions" refers to any covered transaction between a grantee or subgrantee of Federal funds and a participant (such as the prime or general contract). "Lower Tier Covered Transactions" refers to any covered transaction under a First Tier Covered Transaction (such as subcontracts). "First Tier Participant" refers to the participant who has entered into a covered transaction with a grantee or subgrantee of Federal funds (such as the prime or general contractor). "Lower Tier Participant" refers any participant who has entered into a covered transaction with a First Tier Participant or other Lower Tier Participants (such as subcontractors and suppliers).

f. The prospective first tier participant agrees by submitting this proposal that, should the proposed covered transaction be entered into, it shall not knowingly enter into any lower tier covered transaction with a person who is debarred, suspended, declared ineligible, or voluntarily excluded from participation in this covered transaction, unless authorized by the department or agency entering into this transaction.

g. The prospective first tier participant further agrees by submitting this proposal that it will include the clause titled "Certification Regarding Debarment, Suspension, Ineligibility and Voluntary Exclusion-Lower Tier Covered Transactions," provided by the department or contracting agency, entering into this covered transaction, without modification, in all lower tier covered transactions and in all solicitations for lower tier covered transactions exceeding the $25,000 threshold.

h. A participant in a covered transaction may rely upon a certification of a prospective participant in a lower tier covered transaction that is not debarred, suspended, ineligible, or voluntarily excluded from the covered transaction, unless it knows that the certification is erroneous. A participant is responsible for ensuring that its principals are not suspended, debarred, or otherwise ineligible to participate in covered transactions. To verify the eligibility of its principals, as well as the eligibility of any lower tier prospective participants, each participant may, but is not required to, check the Excluded Parties List System website (https://www.epls.gov/), which is compiled by the General Services Administration.

i. Nothing contained in the foregoing shall be construed to require the establishment of a system of records in order to render in good faith the certification required by this clause. The knowledge and information of the prospective participant is not required to exceed that which is normally possessed by a prudent person in the ordinary course of business dealings.

j. Except for transactions authorized under paragraph (f) of these instructions, if a participant in a covered transaction knowingly enters into a lower tier covered transaction with a person who is suspended, debarred, ineligible, or voluntarily excluded from participation in this transaction, in addition to other remedies available to the Federal Government, the department or agency may terminate this transaction for cause or default.

* * * * *

2. Certification Regarding Debarment, Suspension, Ineligibility and Voluntary Exclusion – First Tier Participants:

a. The prospective first tier participant certifies to the best of its knowledge and belief, that it and its principals:

(1) Are not presently debarred, suspended, proposed for debarment, declared ineligible, or voluntarily excluded from participating in covered transactions by any Federal department or agency;

(2) Have not within a three-year period preceding this proposal been convicted of or had a civil judgment rendered against them for commission of fraud or a criminal offense in connection with obtaining, attempting to obtain, or performing a public (Federal, State or local) transaction or contract under a public transaction; violation of Federal or State antitrust statutes or commission of embezzlement, theft, forgery, bribery, falsification or destruction of records, making false statements, or receiving stolen property;

(3) Are not presently indicted for or otherwise criminally or civilly charged by a governmental entity (Federal, State or local) with commission of any of the offenses enumerated in paragraph (a)(2) of this certification; and

(4) Have not within a three-year period preceding this application/proposal had one or more public transactions (Federal, State or local) terminated for cause or default.

b. Where the prospective participant is unable to certify to any of the statements in this certification, such prospective participant shall attach an explanation to this proposal.

2. **Instructions for Certification - Lower Tier Participants:**

(Applicable to all subcontracts, purchase orders and other lower tier transactions requiring prior FHWA approval or estimated to cost $25,000 or more - 2 CFR Parts 180 and 1200)

a. By signing and submitting this proposal, the prospective lower tier is providing the certification set out below.

b. The certification in this clause is a material representation of fact upon which reliance was placed when this transaction was entered into. If it is later determined that the prospective lower tier participant knowingly rendered an erroneous certification, in addition to other remedies available to the Federal Government, the department, or agency with which this transaction originated may pursue available remedies, including suspension and/or debarment.

c. The prospective lower tier participant shall provide immediate written notice to the person to which this proposal is submitted if at any time the prospective lower tier participant learns that its certification was erroneous by reason of changed circumstances.

d. The terms "covered transaction," "debarred," "suspended," "ineligible," "participant," "person," "principal," and "voluntarily excluded," as used in this clause, are defined in 2 CFR Parts 180 and 1200. You may contact the person to which this proposal is submitted for assistance in obtaining a copy of those regulations. "First Tier Covered Transactions" refers to any covered transaction between a grantee or subgrantee of Federal funds and a participant (such as the prime or general contract). "Lower Tier Covered Transactions" refers to any covered transaction under a First Tier Covered Transaction (such as subcontracts). "First Tier Participant" refers to the participant who has entered into a covered transaction with a grantee or subgrantee of Federal funds (such as the prime or general contractor). "Lower Tier Participant" refers any participant who has entered into a covered transaction with a First Tier Participant or other Lower Tier Participants (such as subcontractors and suppliers).

e. The prospective lower tier participant agrees by submitting this proposal that, should the proposed covered transaction be entered into, it shall not knowingly enter into any lower tier covered transaction with a person who is debarred, suspended, declared ineligible, or voluntarily excluded from participation in this covered transaction, unless authorized by the department or agency with which this transaction originated.

f. The prospective lower tier participant further agrees by submitting this proposal that it will include this clause titled "Certification Regarding Debarment, Suspension, Ineligibility and Voluntary Exclusion-Lower Tier Covered Transaction," without modification, in all lower tier covered transactions and in all solicitations for lower tier covered transactions exceeding the $25,000 threshold.

g. A participant in a covered transaction may rely upon a certification of a prospective participant in a lower tier covered transaction that is not debarred, suspended, ineligible, or voluntarily excluded from the covered transaction, unless it knows that the certification is erroneous. A participant is responsible for ensuring that its principals are not suspended, debarred, or otherwise ineligible to participate in covered transactions. To verify the eligibility of its principals, as well as the eligibility of any lower tier prospective participants, each participant may, but is not required to, check the Excluded Parties List System website (https://www.epls.gov/), which is compiled by the General Services Administration.

h. Nothing contained in the foregoing shall be construed to require establishment of a system of records in order to render in good faith the certification required by this clause. The knowledge and information of participant is not required to exceed that which is normally possessed by a prudent person in the ordinary course of business dealings.

i. Except for transactions authorized under paragraph e of these instructions, if a participant in a covered transaction knowingly enters into a lower tier covered transaction with a person who is suspended, debarred, ineligible, or voluntarily excluded from participation in this transaction, in addition to other remedies available to the Federal Government, the

department or agency with which this transaction originated may pursue available remedies, including suspension and/or debarment.

* * * * *

Certification Regarding Debarment, Suspension, Ineligibility and Voluntary Exclusion--Lower Tier Participants:

1. The prospective lower tier participant certifies, by submission of this proposal, that neither it nor its principals is presently debarred, suspended, proposed for debarment, declared ineligible, or voluntarily excluded from participating in covered transactions by any Federal department or agency.

2. Where the prospective lower tier participant is unable to certify to any of the statements in this certification, such prospective participant shall attach an explanation to this proposal.

* * * * *

XI. CERTIFICATION REGARDING USE OF CONTRACT FUNDS FOR LOBBYING

This provision is applicable to all Federal-aid construction contracts and to all related subcontracts which exceed $100,000 (49 CFR 20).

1. The prospective participant certifies, by signing and submitting this bid or proposal, to the best of his or her knowledge and belief, that:

a. No Federal appropriated funds have been paid or will be paid, by or on behalf of the undersigned, to any person for influencing or attempting to influence an officer or employee of any Federal agency, a Member of Congress, an officer or employee of Congress, or an employee of a Member of Congress in connection with the awarding of any Federal contract, the making of any Federal grant, the making of any Federal loan, the entering into of any cooperative agreement, and the extension, continuation, renewal, amendment, or modification of any Federal contract, grant, loan, or cooperative agreement.

b. If any funds other than Federal appropriated funds have been paid or will be paid to any person for influencing or attempting to influence an officer or employee of any Federal agency, a Member of Congress, an officer or employee of Congress, or an employee of a Member of Congress in connection with this Federal contract, grant, loan, or cooperative agreement, the undersigned shall complete and submit Standard Form-LLL, "Disclosure Form to Report Lobbying," in accordance with its instructions.

2. This certification is a material representation of fact upon which reliance was placed when this transaction was made or entered into. Submission of this certification is a prerequisite for making or entering into this transaction imposed by 31 U.S.C. 1352. Any person who fails to file the required certification shall be subject to a civil penalty of not less than $10,000 and not more than $100,000 for each such failure.

3. The prospective participant also agrees by submitting its bid or proposal that the participant shall require that the language of this certification be included in all lower tier subcontracts, which exceed $100,000 and that all such recipients shall certify and disclose accordingly.

ATTACHMENT A - EMPLOYMENT AND MATERIALS PREFERENCE FOR APPALACHIAN DEVELOPMENT HIGHWAY SYSTEM OR APPALACHIAN LOCAL ACCESS ROAD CONTRACTS

This provision is applicable to all Federal-aid projects funded under the Appalachian Regional Development Act of 1965.

1. During the performance of this contract, the contractor undertaking to do work which is, or reasonably may be, done as on-site work, shall give preference to qualified persons who regularly reside in the labor area as designated by the DOL wherein the contract work is situated, or the subregion, or the Appalachian counties of the State wherein the contract work is situated, except:

a. To the extent that qualified persons regularly residing in the area are not available.

b. For the reasonable needs of the contractor to employ supervisory or specially experienced personnel necessary to assure an efficient execution of the contract work.

c. For the obligation of the contractor to offer employment to present or former employees as the result of a lawful collective bargaining contract, provided that the number of nonresident persons employed under this subparagraph (1c) shall not exceed 20 percent of the total number of employees employed by the contractor on the contract work, except as provided in subparagraph (4) below.

2. The contractor shall place a job order with the State Employment Service indicating (a) the classifications of the laborers, mechanics and other employees required to perform the contract work, (b) the number of employees required in each classification, (c) the date on which the participant estimates such employees will be required, and (d) any other pertinent information required by the State Employment Service to complete the job order form. The job order may be placed with the State Employment Service in writing or by telephone. If during the course of the contract work, the information submitted by the contractor in the original job order is substantially modified, the participant shall promptly notify the State Employment Service.

3. The contractor shall give full consideration to all qualified job applicants referred to him by the State Employment Service. The contractor is not required to grant employment to any job applicants who, in his opinion, are not qualified to perform the classification of work required.

4. If, within one week following the placing of a job order by the contractor with the State Employment Service, the State Employment Service is unable to refer any qualified job applicants to the contractor, or less than the number requested, the State Employment Service will forward a certificate to the contractor indicating the unavailability of applicants. Such certificate shall be made a part of the contractor's permanent project records. Upon receipt of this certificate, the contractor may employ persons who do not normally reside in the labor area to fill positions covered by the certificate, notwithstanding the provisions of subparagraph (1c) above.

5. The provisions of 23 CFR 633.207(e) allow the contracting agency to provide a contractual preference for the use of mineral resource materials native to the Appalachian region.

6. The contractor shall include the provisions of Sections 1 through 4 of this Attachment A in every subcontract for work which is, or reasonably may be, done as on-site work.

ATTACHMENT "G"

BUY AMERICA REQUIREMENTS

Source of Supply – Steel and Iron (Federal Aid Contracts Only): For Federal-aid contracts, the Contractor will only use steel and iron produced in the United States, in accordance with the buy America provisions of 23 CFR 635.410. Contractor will ensure that all manufacturing processes for these materials occur in the United States. A manufacturing process is any process that modifies the chemical content, physical shape, size or final finish of a product, beginning with the initial melding and mixing and continuing through the bending and coating stages. A manufactured steel or iron product is complete only when all grinding, drilling, welding, finishing and coating have been completed. If a domestic product is taken outside the United States for any process, it becomes foreign source material. When using steel and iron as a component of any manufactured product incorporated into the project (*e.g.*, concrete pipe, pre-stressed beams, corrugated steel pipe, etc.), these same provisions apply, except that the manufacturer may use minimal quantities of foreign steel and iron when the cost of such foreign materials does not exceed 0.1% of the compensation or $2,500, whichever is greater. These requirements are applicable to all steel and iron materials incorporated into the finished work, but are not applicable to steel and iron items that the Contractor uses but does not incorporate into the finished work. The Contractor shall provide a certification from the producer of steel or iron, or any product containing steel or iron as a component, stating that all steel or iron furnished or incorporated into the finished product was manufactured in the United States in accordance with the requirements of this provision. Such certification shall also include: (1) a statement that the product was produced entirely within the United States, or (2) a statement that the product was produced with the United States except for minimal quantities of foreign steel and iron and specify the actual value of the product. Each such certification shall be furnished to the AUTHORITY prior to incorporating the material into the project. When FHWA allows the use of foreign steel on a project, Contractor shall furnish invoices to document the costs of such material, and obtain the AUTHORITY'S written approval prior to incorporating the material into the project.

ATTACHMENT "H"

PERFORMANCE AND PAYMENT BOND

BY THIS BOND, WE, _____, Inc., as Principal and _____ a Corporation, as Surety, are bound to the Solid Waste Authority of Palm Beach County, hereinafter referred to as "Authority", in the sum of _____ **Dollars (up to $10,000,000),** for payment of which we bind ourselves, our heirs, personal representatives, successors, and assigns, jointly and severally.

THE CONDITION OF THIS BOND is that if Principal:

1. Performs the Agreement dated _____, 20_____ between Principal and Authority for Proposal of Hurricane/Disaster Debris Removal, Reduction and Disposal, **Agreement No. 22-201,** the Agreement being made a part of this bond by reference, in the time and in the manner prescribed in the Agreement, and;

2. Promptly makes payment to all claimants, as defined in Section 255.05(1), Florida Statutes, supplying Principal with labor, materials and supplies, used directly or indirectly by Principal in the prosecution of the work provided for in the Agreement, and;

3. Pays Authority all loss, damages, expenses, costs, and attorney's fees, including appellate proceedings, that Authority sustains because of a default by Principal under the Agreement, and;

4. Performs the guarantee of all work and materials furnished under the Agreement for the time specified in the Agreement, and;

5. At completion of all work covered by Agreement and Final Payment by Authority to Principal then Principal will replace this Performance and Payment Bond with a Proposal Bond, in the amount of 5% of this Performance and Payment Bond, to be held by the Authority as a guarantee that Principal will provide to the Authority a Performance and Payment Bond in the amount of up to $10,000,000 on the occasion of a subsequent Task Order in accordance with the above referenced Agreement;

then this bond is void; otherwise it remains in full force.

Surety shall be responsible for any and all liquidated damages imposed by the Authority for the referenced Agreement.

Any changes in or under the Agreement Documents and compliance or noncompliance with any formalities connected with the Agreement or the changes does not affect Surety's obligation under this bond. Any increase in the total Agreement amount as authorized by the Authority shall accordingly increase the Surety's obligation by the same dollar amount of said increase. CONTRACTOR shall be responsible for notification to Surety of all such changes.

See subsection (2) of Section 255.05, Florida Statutes as amended for the notice and time limitations for claimants.

Signed and sealed this ____ day of _____, 20____.

PRINCIPAL:_____

By: _____
Signature

WITNESS:

Name: _____

1. _____

Title: _____

2. _____

Address: _____

_____

Telephone: _____

SURETY: _____

By: _____
Signature

WITNESS:

Name: _____

1. _____

Title: _____

2. _____

Address: _____

_____

Telephone: _____

NOTE: Date of Bond must not be prior to date of Agreement. If CONTRACTOR is a Partnership, all partners must execute bond.

IMPORTANT: Surety companies executing bonds **must** appear and remain on the Treasury Department's most current list (Circular 570 as amended) during construction, guarantee and warranty periods, and be authorized to transact business in the State of Florida, and be pre-approved by the Authority.

Village of Palm Springs

Executive Brief

AGENDA DATE: June 9, 2022

DEPARTMENT: Public Works

ITEM #5: Approve Hurricane Debris Removal Agreement (Contract No. 22-201B) - Piggyback - Crowder Gulf Joint Venture, Inc.

SUMMARY: The Village needs to select a vendor to assist with debris removal services that would provide the Village with the immediate ability, following a disaster/storm event, to safely and efficiently clear storm-related debris from public rights-of-way and ensure/provide normal operations for our community as quickly as possible. Additionally, it is recommended that the Village's selection(s) meet the Office of Management and Budget's Procurement Guidelines to ensure eligible funding reimbursements requests are approved by the Federal Emergency Management Agency (FEMA) following a federally declared disaster event. Thus, reducing the potential that the Village will be responsible for the service of debris collection and disposal service costs.

To ensure that the Village selects a vendor(s) that enables the Village to receive eligible federal funding reimbursement(s) following a federally declared disaster event, the staff is recommending that the Village access/utilize the Palm Beach County Solid Waste Authority's (SWA) contract that has been awarded to Crowder Gulf Joint Venture, Inc. This selection by the Solid Waste Authority was completed through a competitive bid process - Request of Proposal for Hurricane/Disaster Debris Removal, Reduction, and Disposal (RFP No.22-201/DL - May 8, 2022).

If approved, the Village would use SWA's contracts to obtain debris removal services (i.e public rights of way collection, loading, and hauling to a designated site accepting storm debris). Crowder Gulf Joint Venture, Inc. entered into a 5-year contract with the Solid Waste Authority and meets the federal procurement standards to ensure FEMA compliance to maximize eligible Hurricane-related expense reimbursement for the Village. The Village would accept the pricing of Crowder Gulf Joint Venture, Inc., accessing/utilizing the Palm Beach County Solid Waste Authority's contracts including all terms, conditions, and pricing therein. The term of the contract is set to expire on May 7, 2025.

The Village's Purchasing Code, Section 58-9, Accessing contracts of other government agencies, provides that the Village may award a contract by piggybacking or accessing the goods and/or services from any State of Florida contract; contracts of any Florida political subdivision; or from any other governmental entity (other than the Federal government); provided that the same or substantially similar goods and/or services were competitively solicited.

In the event of an emergency event, the Village Manager will select the contractor(s) to utilize from the approved vendors based on the availability of equipment and staff as well as the fee schedule. This authority will be requested as emergency power and the selection(s) will be presented to the Village Council for approval during the next available Council Meeting (following the storm event).

The proposed agreements were prepared by the Village Attorney and reviewed by the Parks and Recreation Director and Public Works Director.

FISCAL IMPACT:

Funding to support a natural disaster/storm event is available within the Village's Reserves and will be requested to be reimbursed by the Federal Emergency Management Agency (FEMA) following a federally declared disaster/storm event.

ATTACHMENTS:

1. Proposed Agreement - Crowder Gulf Joint Venture, Inc - Piggyback of SWA 2022
2. RFP No. 22-201/DL - Hurricane/Disaster Debris Removal, Reduction and Disposal - Addendum No. 1 - Solid Waste Authority of Palm Beach County
3. CrowderGulf Joint Venture, Inc. (2022) - Hurricane Disaster Debris Removal, Reduction and Disposal - Contract
4. RFP No. 22-201/DL - Hurricane/Disaster Debris Removal, Reduction and Disposal - Solid Waste Authority of Palm Beach County

AGREEMENT FOR DISASTER DEBRIS MANAGEMENT SERVICES

This Agreement for disaster debris management and support services ("Agreement" hereafter) is made as of the _____ day of _____, 2022, by and between the **Village of Palm Springs**, 226 Cypress Lane, Palm Springs, Florida 33461-1699, a municipal corporation organized and existing under the laws of the State of Florida, hereinafter referred to as the VILLAGE, and **CrowderGulf Joint Venture, Inc.**, 5629 Commerce Boulevard East, Mobile, AL 36619, a corporation authorized to do business in the State of Florida, hereinafter referred to as the CONTRACTOR.

RECITALS

WHEREAS, the VILLAGE is in need of a contractor to provide the VILLAGE with disaster debris management and support services; and,

WHEREAS, the Solid Waste Authority of Palm Beach County through its competitive selection process awarded a Contract for disaster debris management and support services (22-201/DL) ("SWA Contract" hereafter) to the CONTRACTOR for substantially the same services sought by the VILLAGE; and,

WHEREAS, the VILLAGE requested and the CONTRACTOR has executed this Agreement with the VILLAGE for disaster debris management and support services based on the pricing and terms and conditions of the SWA Contract; and,

WHEREAS, the VILLAGE desires to accept CONTRACTOR's pricing by incorporating the SWA Contract including all terms, conditions and pricing therein into this Agreement.

NOW THEREFORE, in consideration of the mutual promises set forth herein, the receipt and sufficiency of which are hereby acknowledged, the parties hereto agree as follows:

1. Recitals. The parties agree that the recitals set forth above are true and correct and are fully incorporated herein by reference.

2. SWA Contract. The SWA Contract with the CONTRACTOR is hereby expressly made a part of this Agreement as fully as if set forth at length herein. The VILLAGE shall have all rights, obligations and remedies authorized to the Solid Waste Authority of Palm Beach County under the SWA Contract and all associated and applicable Contract Documents as defined therein.

3. Agreement. In accordance with the terms and conditions in the SWA Contract and pricing therein, the CONTRACTOR shall provide disaster debris management and support services as requested by the VILLAGE.

4. Contract Documents and Conflict of Terms and Conditions. The Contract Documents for this Agreement are compromised of the following:

A. All written modifications and amendments hereto;

B. This Agreement;
C. SWA Contract (including the RFP, Contractors Proposal and Contract).

The Contract Documents of this Agreement are intended to be complementary and interpreted in harmony so as to avoid conflict with the words and phrases interpreted in a manner consistent with managing debris removal and industry standards. In the event of any inconsistency, conflict or ambiguity between or among the Contract Documents of this Agreement, the Contract Documents of this Agreement shall take precedence in the following order:

A. All written modifications and amendments hereto;
B. This Agreement;
C. The SWA Contract.

5. Compensation to Contractor. Payments by the VILLAGE to the CONTRACTOR under this Agreement shall not exceed the amount of compensation, on the unit basis, as set forth under the SWA Contract. CONTRACTOR waives consequential or incidental damages for claims, disputes or other matters in question arising out of or relating to this Agreement.

6. Miscellaneous Provisions.

6.1 The VILLAGE and CONTRACTOR each binds itself, its partners, its successors, assigns and legal representatives to the other party hereto, its partners, successors, assigns and legal representatives in respect of all covenants, agreements and obligations contained in the Contract Documents.

6.2 CONTRACTOR shall maintain the insurance as required in SWA Contract applicable to the goods and services being delivered hereunder. Said insurance will name the VILLAGE as an additional insured.

6.3 Headings and References & Exhibits: The headings contained in this Agreement are inserted for convenience of reference only and shall not be a part or control or affect the meaning hereof. All references herein to Exhibits are to the exhibits hereto, each of which shall be incorporated into and deemed to be a part of this Agreement.

6.4 Counterparts: This Contract may be executed in two or more counterparts, each of which shall be deemed to be an original, but all of which shall be deemed to be an original, but each of which together shall constitute one and the same instrument.

6.5 Entire Agreement; Amendment and Waiver: This Agreement (together with the Exhibits hereto) supersedes any and all prior negotiations and oral or written agreements heretofore made relating to the subject matter hereof and, except for written agreements, if any, executed and delivered simultaneously with or subsequent to the date of this Agreement, constitutes the entire agreement of the parties relating to the subject matter hereof. This Agreement may not be altered or amended except by a writing signed by the parties hereto. No waiver of any of the terms or conditions of this Agreement shall be effective unless in writing and executed by the party to be changed therewith. No waiver

of any condition or of the breach of any term, covenant, representation, warranty or other provision hereof shall be deemed to be construed as a further or continuing waiver of any such condition or breach or a waiver of any other condition or of any breach of any other term, covenant, representation, warranty or other provision contained in this Agreement.

6.6 Successors and Assigns: This Agreement shall be binding upon, and shall inure to the benefit of the parties hereto and their respective successors and assigns.

6.7 Governing Law; Consent to Jurisdiction: This Agreement shall be governed by and construed and interpreted in accordance with the laws of the State of Florida. Each of the parties hereto (a) irrevocably submit itself to the exclusive jurisdiction of the Fifteenth Judicial Circuit Court in and for Palm Beach County, Florida for state actions and jurisdiction of the United States District Court for the Southern District of Florida, Palm Beach Division, for the purposes of any suit, action or other proceeding arising out of, or relating to, this Agreement; (b) waives and agrees not to assert against any party hereto, by way of motion, as a defense of otherwise, in any suit, action or other proceeding, any claim that it is not personally subject to the jurisdiction of the above-named courts for any reason whatsoever; and (ii) to the extent permitted by applicable law, any claim that such suit, action or proceeding by any part hereto is brought in an inconvenient forum or that the venue of such suit, action or proceeding is improper or that this Agreement or the subject matter hereof may not be enforced in or by such courts.

6.8 Third Party Beneficiary rights: This Agreement shall create no rights or claims whatsoever in any person other than a party herein.

6.9 Severability: If any one or more of the provisions of the Agreement shall be held to be invalid, illegal or unenforceable in any respect, the validity, legality and enforceability of the remaining provisions hereof shall not in any way be affected or impaired thereby.

6.10 Effective date, term and renewal: The effective date of this Agreement is the date the Agreement is approved by the Village Council. The term of this Agreement shall be for an initial term to mirror the SWA Contract term which shall expire on May 7, 2022, unless terminated sooner. The SWA Contract is subject to a one year renewal and if renewed the VILLAGE also has the right to renew this Agreement for a one year period.

6.11 Public Records: Public Records: CONTRACTOR shall comply with Florida's Public Records Act, Chapter 119, Florida Statutes, and, if determined to be acting on behalf of the VILLAGE as provided under section 119.011(2), Florida Statutes, specifically agrees to:

(a) Keep and maintain public records required by the VILLAGE to perform the service.

(b) Upon request from the VILLAGE's custodian of public records or designee, provide the VILLAGE with a copy of the requested records or allow the records to be inspected or copied within a reasonable time at a cost that does not exceed the cost provided in Chapter 119, Florida Statutes, or as otherwise provided by law.

(c) Ensure that public records that are exempt or confidential and exempt from public records disclosure requirements are not disclosed except as authorized by law for the duration of this Agreement and following completion of this Agreement if the CONTRACTOR does not transfer the records to the VILLAGE.

(d) Upon completion of this Agreement, transfer, at no cost, to the VILLAGE all public records in possession of the CONTRACTOR or keep and maintain public records required by the VILLAGE to perform the service. If the CONTRACTOR transfers all public records to the VILLAGE upon completion of the Agreement, the CONTRACTOR shall destroy any duplicate public records that are exempt or confidential and exempt from public records disclosure requirements. If the CONTRACTOR keeps and maintains public records upon completion of the Agreement, the CONTRACTOR shall meet all applicable requirements for retaining public records. All records stored electronically must be provided to the VILLAGE, upon request from the VILLAGE's custodian of public records or designee, in a format that is compatible with the information technology systems of the VILLAGE.

IF THE CONTRACTOR HAS QUESTIONS REGARDING THE APPLICATION OF CHAPTER 119, FLORIDA STATUTES, TO THE CONTRACTOR'S DUTY TO PROVIDE PUBLIC RECORDS RELATING TO THIS AGREEMENT, CONTACT THE CUSTODIAN OF PUBLIC RECORDS OR DESIGNEE AT 561-434-5084, jworth@vpsfl.org, OR BY MAIL AT VILLAGE OF PALM SPRINGS, 226 CYPRESS LANE, PALM SPRINGS, FL 33461.

6.12 Preparation: This Agreement shall not be construed more strongly against either party regardless of who was more responsible for its preparation.

6.13 PALM BEACH COUNTY IG: In accordance with Palm Beach County ordinance number 2011-009, the CONTRACTOR acknowledges that this Agreement may be subject to investigation and/or audit by the Palm Beach County Inspector General. The CONTRACTOR has reviewed Palm Beach County ordinance number 2011-009 and is aware of its rights and/or obligations under such ordinance.

6.14 All notices required in this Agreement shall be sent by certified mail, return receipt requested, and sent to the addresses appearing on the first page of this Agreement.

6.15 The VILLAGE is exempt from payment of Florida State Sales and Use Tax. The CONTRACTOR shall not be exempted from paying sales tax to its suppliers for materials used to fill contractual obligations with the VILLAGE, nor is the CONTRACTOR authorized to use the VILLAGE'S Tax Exemption Number in securing such materials.

7. Indemnification. CONTRACTOR shall indemnify and hold harmless the VILLAGE in the same manner as provided in the SWA Contract as it relates to the indemnification of the Solid Waste Authority of Palm Beach County.

8. Agreement Administration. Services of the CONTRACTOR shall be under the general direction of the Village Manager, or his/her designee, who will act as the VILLAGE'S representative during the term of the Agreement.

9. E-Verify Pursuant to Section 448.095(2), Florida Statutes, effective January 1, 2021, the CONTRACTOR shall:

9.1 Register with and use the E-Verify system to verify the work authorization status of all newly hired employees and require all subcontractors (providing services or receiving funding under this Agreement) to register with and use the E-Verify system to verify the work authorization status of all the subcontractors' newly hired employees;

9.2 Secure an affidavit from all subcontractors (providing services or receiving funding under this Agreement) stating that the subcontractor does not employ, contract with, or subcontract with an "unauthorized alien" as defined in Section 448.095(1)(k), Florida Statutes;

9.3 Maintain copies of all subcontractor affidavits for the duration of this Agreement and provide the same to the Owner upon request;

9.4 Comply fully, and ensure all of its subcontractors comply fully, with Section 448.095, Florida Statutes;

9.5 Be aware that a violation of Section 448.09, Florida Statutes (Unauthorized aliens; employment prohibited) shall be grounds for termination of this Agreement; and,

9.6 Be aware that if the VILLAGE terminates this Agreement under Section 448.095(2)(c), Florida Statutes, the CONTRACTOR may not be awarded a contract for at least one (1) year after the date on which the Agreement is terminated and will be liable for any additional costs incurred by the VILLAGE as a result of the termination of the Agreement.

IN WITNESS WHEREOF, the VILLAGE and CONTRACTOR have caused this Agreement to be executed the day and year shown above.

VILLAGE OF PALM SPRINGS, FLORIDA

By: _____
Bev Smith, Mayor

ATTEST

_____
Kimberly Wynn, Village Clerk

Approved as to form and legal sufficiency:

_____
Glen J. Torcivia, Village Attorney

CONTRACTOR: **CROWDERGULF JOINT VENTURE, INC.**

By: Ashley Ramsay-Naile

Print Name: Ashley Ramsay-Naile

Title: President

[Corporate Seal]

STATE OF ALABAMA
COUNTY OF MOBILE

The foregoing instrument was acknowledged before me this 16th day of May, 2022 by Ashley Ramsay-Naile, as President of CrowderGulf Joint Venture, Inc., a corporation authorized to do business in the State of Alabama, and who is personally known to me or who has produced the following _____ as identification.

Notary Public

Kerrie A. Noll
Print Name: Kerrie A. Noll
My commission expires: 09-14-2022

KERRIE A. NOLL
Notary Public, State of Alabama
Alabama State At Large
My Commission Expires
September 14, 2022

YOUR PARTNER FOR
SOLID WASTE SOLUTIONS

ADDENDUM NO. 1

HURRICANE/DISASTER DEBRIS REMOVAL, REDUCTION AND DISPOSAL

RFP No. 22-201/DL **February 9, 2022**

This Addendum to the specifications and contract documents is issued to provide additional information and clarification to the original RFP's scope of services and proposal form and is hereby declared a part of the original scope of services and contract documents. In case of a conflict, this Addendum shall govern.

PROPOSERS shall acknowledge receipt of this Addendum by inserting this Addendum Number and Date issued within Proposal Form 1 – Transmittal Letter located within the original RFP document. Failure to do so may be cause for the PROPOSER to be rendered as non-responsive.

REMINDER:

SUBMISSION DUE DATE: FEBRUARY 18, 2022

SUBMISSION DEADLINE: 2:00PM

VIA NEGOMETRIX

1. The following are questions received prior to the deadline on Tuesday, February 7, 2022:

   Q.1: Section 11 – Bond Requirements, Sections A & B, provide the guidance for providing all bonds. For clarification purposes, section A states that the proposer must submit an Irrevocable Letter of Commitment from an A-or better-rated Surety Company to provide a $10,000,000 Performance & Payment Bond. Section B discusses when the Performance and Payment bond is to be provided to the Authority; when that time comes, will the Performance and Payment Bond need to be in the amount of $10,000,000, or will it be based on the estimated value of the project at that time?

   A.1: Please refer to Article 40 of the sample contract.

   Q.2: Can you please provide the names and titles of the Evaluation Committee members?

   A.2: Dr. Lori Vinikoor, Citizens' Advisory Committee Chair
   Patrick Carroll, Chief Operations Officer
   Mariana Feldpausch, CIS Operations Manager
   Colleen Robbs, Director of Equal Business Opportunity Office
   David Broten, Environmental Programs Manager

   Q.3: Could you clarify if the pricing provided for removing hazardous trees 12" in diameter or greater is for cutting the trees and placing them in the right-of-way to be collected as vegetative debris, or is it for the cutting, loading & hauling of the hazardous trees?

   A.3: Please refer to attached revised page REV16, Section 2.6.2.1.

   Q.4: Section 2.6.4 Securing Debris – Are we to understand that all loads of debris en route to a TDMS must be tarped or covered in some manner?

   A.4: Please refer to the attached revised pages REV19 and REV 20.

Q.5: Proposal Form 3 Pricing Proposal – Tipping fees are usually billed by the Contractor separately, at cost, with no markup; however, Line Item 4 calls for the rate to include disposal cost; by this, do you mean to include any tipping fees in our proposed rate?

A.5: Proposal Form 3 – Price Proposal, Part A, Item 4.0 requires the Proposer to include the disposal/recycling cost per cubic yard for the final destination of reduced yard waste debris. This rate and the final destination plan for wood chips is required under Part III, Proposal Submission Requirements, Section 3.2.6 General Operations Plan, Item 1, Mulch Disposal Plan.

Q.6: RFP Part II – Statement of Work states in Section 2.6.2.1 that the Authority will not compensate the Contractor for leaning trees less than 12" in diameter on a unit rate basis. Yet, Proposal Form 3 requests pricing for Hazardous Tree Removal and Hauling with one size category being 6" to 12.99" in diameter. Could you please clarify?

A.6: Please refer to attached revised page REV 16.

Q.7: On pg 34 it states that "PROPOSER who submits the Proposal with the lowest Total Proposal Price will receive 20 points." Can the Authority please confirm this is referring to the Total Proposed Price on Part A of the RFP Proposal Form 3?

A.7: Yes, Proposer with the lowest Total Proposal Price from Proposal Form 3 - Price Proposal, Part A, will receive 20 points.

Q.8: Will the Authority weigh the unit rate line items in Part A and C of the RFP Proposal Form 3 more heavily than the hourly rate line items in Part B of the RFP Proposal Form 3?

A.8: Proposal Form 3 – Price Proposal Total Proposal Price will be weighed for the Evaluation of Price Proposal as per page 32 of RFP.

Q.9: We are curious why the Authority did not apply an Affirmative Procurement Initiative to this procurement requiring S/M/WBE participation. Could you provide insight?

A.9: All work performed under this contract is to be in conformance with FEMA guidelines. These guidelines prohibit the use of locally based S/M/WBE programs. The Solid Waste Authority system is a locally based system and therefore, cannot be applied to this procurement. The Authority does encourage the use of S/M/WBE vendors in section 3.8.2 (C) of the RFP.

Q.10: Bonding Requirements: Regarding bonding requirements: Per Page 4, paragraph B of the RFP, the proposal bond must be in effect until any active-duty periods when the payment and performance bonds will take the place of proposal bond. Please clarify if the proposal bond must stay in effect for the entire 3-year term and possible 3-year renewal term even if the contract is never activated?

Page 4, paragraph A of the RFP states that the Proposer must submit an "Irrevocable Letter of Commitment" with the Proposal Bond "upon issuance of first Task Order. Given the amount/cost of bond and the length of the term, would the SWA be willing to revise the bonding requirement to read "letter of bonding ability" or "letter of bonding capacity" instead of "irrevocable letter of commitment"?

A.10: Yes, the proposal bond must stay in effect for the entire 3-year term and possible 3-year extension if the contract is never activated.

There will be no change to the irrevocable letter of commitment requirement.

Q.11: TDMS Bonus Points: How far away is a TDMS that would be eligible for the bonus points?

A.11: Please refer to attached revised page REV 29.

Q.12: Haul out of Ash: 1. There is currently a line item (5.0) for reduction of vegetation through air curtain incineration. Will the Authority consider adding a line item for haul out of ash to a final disposal site? 2. If no, under what line item should this be included? 3. If a new line item is added, can the Authority confirm it will be responsible for disposal fees for ash?

A.12: Please refer to the attached revised page REV 39.

Q.13: RFP: Please confirm the entire RFP does not need to be included in our proposal submittal.
A.13: It is solely at the Proposer's discretion as to the documents considered as proposal submittal.

2. **Pages 16, 19, 20, and 29, of the RFP have been revised and are hereby attached as REV 16, REV 19, REV 20, and REV 29.**

3. **PROPOSAL FORM 3 – PRICE PROPOSAL PART A AND PART C have been revised and is hereby attached as REV 39 and REV 41.**

ALL ELSE REMAINS THE SAME

Diane LeRay

Diane LeRay, CPPO, CPPB
Procurement Manager

2.6.2.1 Removal of Hazardous Leaning Trees and Hanging Limbs

a) Under this contract, work shall consist of all labor, equipment, fuel, and miscellaneous costs necessary to remove all hazardous trees six inches (6") or greater in diameter, measured four and a half feet (4.5') from the base of the tree or chest height and hanging limbs two inches (2") or greater in diameter existing in private and public right-of-way. Further, debris generated from the removal of hazardous trees and hanging limbs two inches (2") or greater existing in private and public right-of-way will be placed at the public right-of-way for removal as vegetative debris in accordance with Proposal Form 3, Price Proposal, Part A, Item 1.0A. Hazardous leaning trees less than six inches (6") in diameter, measured four and a half feet (4.5') from the base of the tree or at chest height, will be flush cut, and placed on the public right-of-way to be removed as vegetative debris. The AUTHORITY will not compensate the CONTRACTOR for leaning trees less than six inches (6") in diameter on a unit rate basis.

b) Removal and transportation of hazardous trees six inches (6") or greater in diameter and hanging limbs two inches (2") or greater in diameter existing in private and public right-of-way will be performed as identified by the AUTHORITY. All disaster specific eligibility guidelines regarding size and diameter of leaning trees will be communicated to the CONTRACTOR, in writing, by the AUTHORITY. In order for leaning or hazardous trees to be removed and eligible for reimbursement, the tree must satisfy a minimum of one (1) of the following requirements:

i) The tree is leaning in excess of 30° degrees in a direction that poses an immediate threat to public health, welfare, and safety.
ii) The tree is dead, twisted, or mangled as a direct result of the storm and a certified arborist can attest to the fact that the tree will die and potentially create a falling hazard to the public.

2.6.2.2 Removal of Hazardous Stumps

a) Under this contract, work shall consist of all labor, equipment, fuel, and miscellaneous costs necessary to remove all hazardous uprooted stumps 24 inches or greater in diameter, measured 24 inches from the base of the tree existing in private and public right-of-way. Further, debris generated from the removal of uprooted stumps existing in private and public right-of-way will be placed at the public right-of-way for removal as vegetative debris. Stumps measured 24 inches from the base of the tree and less than 24 inches in diameter will be considered normal vegetative debris and removed in accordance with with Proposal Form 3, Price Proposal, Part A, Item 1.0A. The AUTHORITY will not compensate hazardous stumps less than 24 inches in diameter on a unit rate basis and instead will be considered normal vegetative debris. The diameter of stumps less than 24 inches will be converted into a cubic yardage volume based on the published FEMA stump conversion table (In accordance with current FEMA public assistance guidelines) and removed under the terms and conditions of 2.6.2.

to be filled to capacity. Cyclone fence may be used as temporary tailgates if they comply with the following specifications:

1. Fencing must be permanently attached to one side of the truck bed.
2. After loading, the fencing must be tied to the other side of the truck bed at two places with heavy gauge wire.
3. Fencing must extend to the bottom of the bed.
4. After loading, bottom of fencing shall be tight against the bed of the truck and secured at a minimum of two locations.
5. Solid iron metal bars must be secured to both sides of the fencing.
6. There shall be no hand loaded equipment allowed.

B. The AUTHORITY or designee shall complete certifications indicating the type of vehicle, make and model, license plate number, equipment number, and measured maximum volume, in cubic yards, of the load bed of each piece of equipment utilized to haul debris. The measured volume of each piece of equipment shall be calculated from actual internal physical measurement performed and certified by the CONTRACTOR. Maximum volumes may be rounded up to the nearest cubic yard. The reported measured maximum volume of any load bed shall be the same as shown on the placards affixed to each piece of equipment. The AUTHORITY reserves the right to re-measure trucks and trailers at any time to verify reported capacity. If a truck and/or trailer are re-measured and the yardage capacity is determined to be lower, the lower yardage volume will be retroactive to the initial load and total volume adjusted accordingly.

C. All trucks and trailers utilized in hauling debris shall be equipped with a tailgate that will permit the vehicle to be loaded to capacity and effectively contain the debris on the vehicle while hauling. If installed, all sideboard extensions must remain in place throughout the operation, or the vehicle must be re-measured and remarked. All extensions to the bed are subject to acceptance or rejection at the sole discretion of the AUTHORITY or designee.

D. Trucks or equipment designated for use under this Agreement shall not be used for any other work during working hours. The CONTRACTOR shall not solicit work from private citizens or others to be performed in the designated Collection Service Area during the period of this Agreement. Under no circumstance will the CONTRACTOR mix debris hauled for others with debris hauled under this Agreement. Failure to comply will result in no payment to CONTRACTOR and the operator and vehicle will be declared ineligible to provide any additional emergency debris collection services. Any and all unapproved changes to placard will result in no payment to CONTRACTOR and the operator and vehicle will be declared ineligible to perform any additional emergency debris collection services.

2.6.4 Securing Debris

The CONTRACTOR shall be responsible for properly and adequately securing debris on each piece of equipment utilized to haul debris. Prior to leaving the loading site, the CONTRACTOR shall ensure that each load is secure and trimmed so that no debris extends horizontally beyond the bed of the equipment in any direction. All loose debris shall be reasonably compacted during loading and secured during transport.

2.6.5 Equipment Signage

Prior to commencing operations, the AUTHORITY or designee shall affix to each piece of equipment, signs or markings indicating the Owner Operator's name and a unique equipment identification number. One sign shall be placed on each side of the equipment. For those trucks, trailers and other equipment intended to haul debris, the maximum volume, in cubic yards, of the load bed shall also be shown. Each operator shall keep AUTHORITY certification with them at all times. Placards must remain on both sides of equipment.

2.6.6 Other Considerations

A. The CONTRACTOR shall assign and provide an Operations Manager (OM) to the AUTHORITY TDMS to serve as the principal liaison between the AUTHORITY Director, Customer Services or designee and the CONTRACTOR'S forces. The assigned OM must be knowledgeable of all facets of the CONTRACTOR'S operations and have authority in writing to commit the CONTRACTOR. The OM shall be on call 24 hours per day, seven (7) days per week and shall have electronic linkage capability for transmitting and receiving relevant contractual information and make arrangements for onsite accommodations. This linkage shall provide immediate contact via cell phone, Fax machine, and have Internet capabilities. The OM will participate in daily meetings and disaster exercises, functioning as a source to provide essential element information. The OM will report to the AUTHORITY Director, Customer Services or designee. This position will not require constant presence; rather the OM will be required to be physically capable of responding to the AUTHORITY Emergency Management Coordinator within 30 minutes of notification.

B. The CONTRACTOR shall be responsible for control of pedestrian and vehicular traffic in the work area. At a minimum, one flag person should be posted at each approach to the work area.

C. The CONTRACTOR shall supervise and direct the work, using skilled labor and proper equipment for all tasks. Safety of the CONTRACTOR'S personnel and equipment is the responsibility of the CONTRACTOR. Additionally, the CONTRACTOR shall pay for all materials, personnel, taxes, and fees necessary to perform under the terms of this contract.

D. Payment for debris hauled will be based on the quantity of debris hauled in cubic yards. Debris hauled to a TDMS will require a validated load ticket. Drivers will be given an electronic load tickets at the loading site by an AUTHORITY loading site monitor. The quantity of debris hauled will be estimated in cubic yards at the TDMS by an AUTHORITY TDMS monitor. The estimated quantity will be recorded on the electronic load ticket. The AUTHORITY TDMS monitor will retain one copy of the paper load ticket and the driver will retain the remaining copies of the load ticket. Debris being hauled to

3.2.5 Experience and Qualifications Narrative

PROPOSER shall demonstrate the following:

A. Provide a comprehensive description of all mobilizations (minimum of three) performed as a prime contractor for disaster debris services collecting and processing a minimum of 1 million cubic yards of debris collected from public right of ways. PROPOSERS unable to identify three or more mobilizations meeting the 1 million cubic yard threshold, per each mobilization, are requested to submit all relevant experience they have that documents the ability to perform the services (right of way collection and TDMS management) as requested by this RFP. No limitation exists for the period of time a PROPOSER may go back to describe the experience as requested. Do not show work performed as a sub-contractor. **(PROPOSAL FORM 6 - FORM A)**

   For each mobilization the PROPOSER is requested to identify the following:

   - Name and type of storm event
   - Date and location
   - Narrative of disaster debris services of work performed during mobilization event
   - Total value of contract for services performed
   - Number of cubic yards of debris collected by PROPOSER from public right of ways during mobilization
   - Number of cubic yards of debris handled by PROPOSER at TDMS during mobilization
   - Name, address, and telephone number of customers point of contact for reference purposes.

B. List all emergency debris removal and disposal contracts performed in the last three (3) years as a prime contractor. **(PROPOSAL FORM 6 - FORM B)**

3.2.6 General Operations Plan

PROPOSER shall provide the following:

1. At a minimum a detailed Mulch Disposal Plan. The AUTHORITY is committed to recycling and or beneficial re-use of mulch. Additional consideration will be taken for Beneficial Re-Use Plan. PROPOSER is required to provide a full description of how PROPOSER intends to dispose and or re-use one million (1,000,000) cubic yards of mulch. PROPOSER is required to address how PROPOSER intends to comply with all federal, state, and local guidelines pertaining to mulch disposal. PROPOSER is also required to submit any agreement(s) he/she currently has for the disposal and or beneficial re-use of mulch. PROPOSER is required to give a full description of their end use plan.

2. At a minimum a detailed TMDS Plan pertaining to Construction Debris (C & D) Recycling and or Reduction for estimated five hundred thousand (500,000) cubic yards. The AUTHORITY requests that PROPOSER implements a recycling and/or reduction program for C & D material to minimize amount of debris that will go to a landfill. PROPOSER is requested to address programs they will implement to facilitate recycling and or reduction of construction debris waste.

3. Resumes for the PROPOSER'S management team and all key personnel who will be assigned to the agreement to include, among other things: names, job titles, responsibilities, and applicable debris management experience.

4. Provide private TDMS available for use within Palm Beach County. Provide letters of agreements with the owners for use of such sites. Identify the location of the sites and site

PROPOSAL FORM 3 – PRICE PROPOSAL

PART A – VOLUME BASED PRICING FOR 3,000,000 CUBIC YARD (CY) DEBRIS DISASTER

ITEM/DESCRIPTION	ESTIMATED QUANTITY	UNIT	PRICE PER CY	EXTENSION
1.0 Public Property and Right of Way Collection, Loading and Hauling to a designated TDMS.				
A. Vegetation	2,500,000	CY		
B. Construction Debris / Mixed Debris	500,000	CY		
2.0 TDMS operation to include placement of monitoring towers, portable toilets, keeping on-site and adjacent roads area clean of trash and garbage, debris acceptance, pile management, and Phase I Reclamation.	3,000,000	CY		
3.0 Processing of debris through grinding and/or chipping.	2,500,000	CY		
4.0 Loading, hauling and disposing wood chips to final destination. ***(This rate includes disposal cost)***	1,000,000	CY		
5.0 Loading and hauling of construction debris and/or mixed debris from TDMS to a permitted C&D recycling facility or any other designated Disposal Facility. ***(This rate <u>shall not</u> include disposal cost). Based on miles from TDMS to final destination– 1 way.***				
A. 0 ≤ 20 miles	500,000	CY		
B. > 20 ≤ 50 miles	500,000	CY		
C. > 50 ≤ 100 miles	500,000	CY		
AVERAGE: (Item 6.0 A-C)				
AVERAGE: (Item 5.0 A-C) **X 500,000** CY =				$
TOTAL PROPOSAL PRICE: (Items 1.0 - 5.0)				$

PROPOSER MUST PROVIDE PRICE FOR ALL LINE ITEMS 1 THRU 6. FAILURE TO DO SO MAY RENDER YOUR PROPOSAL TO BE DEEMED NON-RESPONSIVE.

Unit Prices, unless otherwise indicated, shall include all labor (operators, laborers, supervisors) and materials including but not limited to: supplies, equipment maintenance, repairs, repair parts, fuels, lubricants, cellular phones, transportation, and housing, if required, necessary to accomplish the project. The quantities and distributions are estimated for the purpose of making an award. Locations of sites, debris quantities, destinations, material densities, etc. may differ substantially in an actual disaster.

Assumptions: 3,000,000 cubic yards of debris consisting of 2,500,000 cubic yards of vegetation debris and 500,000 cubic yards of mixed debris.

PROPOSAL FORM 3 – PRICE PROPOSAL

PART C – UNIT COST SCHEDULE

ITEM	HAZARDOUS STUMP REMOVAL, HAULING, AND DISPOSAL	UNIT	UNIT COST
1.	24-inch diameter to 48.99-inch diameter	Stump	
2.	49-inch diameter and greater	Stump	
3.	Stump Fill Dirt – Fill dirt for stump holes after removal	CY	
	HAZARDOUS HANGING LIMBS (HANGERS) To include removal of all hanging limbs. Limbs to be cut and placed on the right of way for collection as vegetative debris.		
4.	2-inch diameter and greater	Tree	
	HAZARDOUS TREE REMOVAL Trees to be flush cut at ground level and placed on the right of way for removal as vegetative debris.		
5.	6-inch diameter to 11.99-inch diameter	Tree	
6.	12-inch diameter to 23.99-inch diameter	Tree	
7.	24-inch diameter to 35.99-inch diameter	Tree	
8.	36-inch diameter to 47.99-inch diameter	Tree	
8.	48-inch diameter and greater	Tree	

NOTE:
The following is information only and will NOT be considered in the evaluation of this RFP

The AUTHORITY reserves the right to use this contract to handle small quantities of debris removal and as support for our Franchise Contracts as needed. Below is a daily rate to remove debris. The AUTHORITY will pay for the disposal cost. There is no requirement to provide a rate, however if you do, we expect your company to honor this special service and respond within 48 hours at the rate below.

COLLECTION SERVICE ONLY	
EQUIPMENT	DAILY RATE (10 HRS/DAY)
Knuckleboom Loader and Operator	$



YOUR PARTNER FOR
SOLID WASTE SOLUTIONS

AGREEMENT FOR

HURRICANE/DISASTER DEBRIS REMOVAL, REDUCTION AND DISPOSAL

BETWEEN

SOLID WASTE AUTHORITY OF PALM BEACH COUNTY

AND

CROWDERGULF JOINT VENTURE, INC.

AGREEMENT NO. 22-201B

SOLID WASTE AUTHORITY OF PALM BEACH COUNTY
7501 NORTH JOG ROAD
WEST PALM BEACH, FLORIDA 33412
(561) 640-4000

TABLE OF CONTENTS

ARTICLE		PAGE
1.	Effective Date and Incorporation of Recitals	1
2.	Services to be performed by Contractor	1
3.	Compensation	1
4.	Insurance	2
5.	Standard of Care	3
6.	Indemnification	3
7.	Independent Contractor	3
8.	Authority to Conduct Business	4
9.	Compliance with Laws	4
10.	Sub-Contractor	4
11.	Federal and State Taxes	4
12.	Availability of Funds	4
13.	Authority's Responsibilities	4
14.	Default	4
15.	Termination for Convenience	5
16.	Uncontrollable Forces	5
17.	Jurisdiction, Venue, Waiver of Jury Trial and Remedies	5
18.	Commercial Non-Discrimination Policy	5
19.	Waiver	6
20.	Severability	6
21.	Entirety of Agreement and Modification	6
22.	Successors and Assigns	6
23.	Contingent Fees	7
24.	Truth-in-Negotiation Certificate	7
25.	Ownership of Documents	7
26.	Public Records, Access and Audits	7
27.	Inspector General	9
28.	Notice	9
29.	Contract Administration	10
30.	Key Personnel	10
31.	Equal Business Opportunity Program	11
32.	Scrutinized Companies	11
33.	Agreements with other Governmental Entities	11
34.	Third Party Beneficiary Disclaimer	12
35.	E-Verify – Employment Eligibility	12
36.	Confidentiality	12
37.	Payment Adjustment Schedule	12
38.	Order of Agreement Activation/Location Assignment	14
39.	Task Order/Performance	14
40.	Bonds	14
41.	Florida Highway Administration (FHWA) Form 1273	14
42.	Buy America Requirements	15
43.	Disadvantaged Business Enterprises	15
44.	Certification Regarding Suspension and Debarment	15
45.	Access to Records and Their Retention	16
46.	Audit Requirements	16
47.	National Environmental Policy Act (NEPA)	16

48. Americans with Disabilities Act 16
49. Compliance with Title VI, Title VII and other Federal Laws and Regulations 16
50. Convict Labor Prohibition 17
51. Certification Regarding Lobbying Activities 17
52. DHS Seal, Logo, and Flags 17
53. No Obligation by Federal Government 17
54. Program Fraud and False or Fraudulent Statement or Related Acts 17
Contract Execution 18

EXHIBITS

A. Scope of Work 19
B. Fee Schedule 36

ATTACHMENTS

A. Task Order Disaster Debris Management 39
B. Pre-Approved Temporary Debris Management Sites Map 40
C. Public Assistance Program and Policy Guide 41
D. Mobilization Schedule 42
E. FHWA Form 1273 43
F. Buy America Requirements 55
G. Performance and Payment Bond 56

AGREEMENT FOR PROFESSIONAL SERVICES

This Agreement is made and entered into as of APRIL 25th, 2022, (hereinafter referred to as the Agreement) by and between **Solid Waste Authority of Palm Beach County**, a dependent special district created by Chapter 2001-331, Laws of Florida, as amended, (hereinafter referred to as AUTHORITY) and **CROWDERGULF JOINT VENTURE, INC.** (hereinafter referred to as CONTRACTOR and when referred to collectively with AUTHORITY, the Parties), a Corporation, whose Federal Employer ID Number is **01-0626019**;

Whereas, in accordance with the AUTHORITY's Request for Proposals No. 22-201/DL solicited to employ the services of the CONTRACTOR for the purpose of providing Hurricane/Disaster Debris Removal, Reduction and Disposal, and;

Whereas, CONTRACTOR represents it is qualified, capable and prepared to provide such services.

Now, therefore, in consideration of the promises contained herein and other good and valuable consideration, the receipt of which is acknowledged by the other, the parties hereto agree as follows:

ARTICLE 1 - EFFECTIVE DATE AND INCORPORATION OF RECITALS

The foregoing recitals are hereby incorporated herein by reference.

1.1 The Effective Date of this Agreement shall be **May 8, 2022** and the Initial Term of this Agreement is for three (3) years and shall expire on **May 7, 2025,** unless terminated earlier as provided for herein.

1.2 The AUTHORITY shall have the option of extending this Agreement for three (3) additional years, as approved by the AUTHORITY's Board or designee, in its sole and unfettered discretion, on the same terms and conditions. Such extension shall be in the form of a written Amendment to the Agreement executed by both Parties.

1.3 The continuance of this Agreement from year-to-year is contingent upon successful annual recertification of the CONTRACTOR's capabilities. The recertification process will be a review of the fiscal (bankruptcy, etc.), logistical (equipment availability, etc.), and moral (conviction for environmental crime, conviction for crime against a public entity, etc.) responsibility of the CONTRACTOR and a determination by the AUTHORITY, based on this review, of whether or not the CONTRACTOR continues to be a viable firm to provide the services described in this Agreement.

ARTICLE 2 - SERVICES TO BE PERFORMED BY CONTRACTOR

CONTRACTOR shall perform the services as specifically stated in the Scope of Work, attached hereto and made a part hereof as Exhibit A, and/or as may be specifically designated and authorized by the AUTHORITY. Such authorizations will be referred to as Task Orders. Each Task Order shall set forth a specific scope of services, rate/amount of compensation, completion date, and other pertinent details of the task being authorized. The AUTHORITY, by virtue of this Agreement, gives the CONTRACTOR no guarantee of any work/services or any specific amount of work/services that may be accomplished during the period this Agreement is in full force and effect.

ARTICLE 3 - COMPENSATION

3.1 The AUTHORITY shall pay CONTRACTOR in accordance with the Fee Schedule, attached hereto and made a part hereof as Exhibit B. In addition, the Parties may negotiate a lump sum or not-to-exceed amount on a per-project basis on an individual Task Order.

3.2 The CONTRACTOR shall submit semi-monthly invoices for services rendered. All invoices must reference

the Task Order number. Invoices shall include a statement of progress and appropriate audit quality detail to satisfy the Federal Emergency Management Agency (FEMA) requirements.

3.3 Payment of CONTRACTOR by AUTHORITY is not contingent upon the AUTHORITY being reimbursed by the Federal Emergency Management Agency (FEMA). Payment to CONTRACTOR will be made for any work directed by the AUTHORITY which is determined by Federal and State agencies to be ineligible for reimbursement.

3.4 Payment of invoices shall be within thirty (30) days after receipt of a correct, fully documented invoice. All invoices shall be delivered to:

Solid Waste Authority of Palm Beach County
7501 North Jog Road
West Palm Beach, Florida 33412
Attn: Accounts Payable

3.5 CONTRACTOR will clearly mark its final/last billing with the words "Final Invoice". This will certify that all services have been fully performed under this Agreement and that all charges and costs have been invoiced to the AUTHORITY. Thereupon, this account will be closed and any additional charges or costs, not included in the Final Invoice, shall be waived by CONTRACTOR. The AUTHORITY shall not be liable for the payment of any such additional charges or costs not included in the Final Invoice.

3.6 The AUTHORITY will retain 5% of the payment under each Task Order until such time as the entire project is completed to the AUTHORITY's satisfaction and all subcontractors and any material suppliers verify that they have been paid.

ARTICLE 4 - INSURANCE

4.1 During the performance of the Services under this Agreement, CONTRACTOR shall maintain the following insurance policies written by an insurance company authorized to do business in Florida and acceptable to the AUTHORITY.

1. **General Liability** Insurance with bodily injury limits of not less than $1,000,000 for each occurrence, and with property damage limits of not less than $1,000,000 for each occurrence.

2. **Automobile Liability** Insurance with bodily injury limits of not less than $5,000,000 for each person and not less than $5,000,000 for each accident and with property damage limits of not less than $5,000,000 for each accident.

3. **Workers' Compensation** Insurance in accordance with statutory requirements and Employer's Liability Insurance with limits of not less than $500,000 for each accident, $500,000 for each disease, and $500,000 aggregate.

4. **Excess Liability** Insurance with limits of not less than $10,000,000 for each occurrence and annual aggregate.

4.2 Deductible amounts shall not exceed 5% of the total amount of required insurance in each category. Should any policy contain any unusual exclusions, said exclusions shall be so indicated on the certificate(s) of insurance.

4.3 CONTRACTOR shall furnish AUTHORITY **Certificates of Insurance**, which shall include a provision that policy cancellation, non-renewal or reduction of coverage will not be effective until at least **thirty (30) days** after written notice has been given to the AUTHORITY. CONTRACTOR shall include AUTHORITY as an **Additional Insured** on the General Liability and Automobile Liability insurance policy required by this

Agreement. All of CONTRACTOR'S subcontractors shall be required to include AUTHORITY and CONTRACTOR as **Additional Insureds** on all of their liability insurance policies.

4.4 CONTRACTOR shall ensure that CONTRACTOR's naming of the AUTHORITY as an additional insured on its General Liability and Automobile Liability insurance policies pursuant to this Agreement shall afford coverage for the negligent, reckless, intentionally wrongful or willful acts of CONTRACTOR and other persons employed or utilized by the CONTRACTOR in the performance of this Agreement.

4.5 In the event that subcontractors used by the CONTRACTOR do not have insurance, or do not meet the required insurance limits herein, CONTRACTOR shall indemnify and hold harmless the AUTHORITY for any claim(s) in excess of the subcontractor's insurance coverage.

4.6 The CONTRACTOR shall not commence work under this Agreement until all insurance required as stated herein has been obtained and such insurance has been approved by the AUTHORITY.

ARTICLE 5 - STANDARD OF CARE

5.1 The CONTRACTOR shall exercise the same degree of care, skill, and diligence in the performance of the Services performed pursuant to this Agreement as is ordinarily provided by comparable, qualified professionals under similar circumstances. The CONTRACTOR shall, at no additional cost to AUTHORITY, re-perform services which fail to satisfy the foregoing standard of care.

5.2 The CONTRACTOR warrants that all services shall be performed by skilled and competent personnel to the highest professional standards in the field.

ARTICLE 6 - INDEMNIFICATION

6.1 **GENERAL**

Having considered the risks and potential liabilities that may exist during the performance of the services and in consideration of the promises included herein, AUTHORITY and CONTRACTOR agree to allocate such liabilities in accordance with this Article 6.

6.2 **INDEMNIFICATION**

The CONTRACTOR shall indemnify and hold harmless the AUTHORITY, and its officers and employees, from all liabilities, damages, losses, and costs, including, but not limited to, reasonable attorney's fees, to the extent caused by the negligence, recklessness, or intentionally wrongful conduct of the CONTRACTOR and other persons employed or utilized by the CONTRACTOR in the performance of the Agreement.

6.3 **SURVIVAL**

Upon completion of all services, obligations and duties provided for in this Agreement, or in the event of termination of this Agreement for any reason, the terms and conditions of this Article shall survive.

ARTICLE 7 - INDEPENDENT CONTRACTOR

7.1 The CONTRACTOR is, and shall be, in the performance of all work services and activities performed under this Agreement, an Independent Contractor, and not an employee, agent, or servant of the AUTHORITY. All persons engaged in any of the work or services performed pursuant to this Agreement shall at all times, and in all places, be subject to the CONTRACTOR'S sole direction, supervision, and control. The CONTRACTOR shall exercise control over the means and manner in which it and its employees perform the work, and in all respects the CONTRACTOR'S relationship and the relationship of its employees to the AUTHORITY shall be that of an Independent Contractor and not as employees or agents of the AUTHORITY.

7.2 The CONTRACTOR does not have the power or authority to bind the AUTHORITY in any promise, agreement or representation other than specifically provided for in this Agreement.

ARTICLE 8 - AUTHORITY TO CONDUCT BUSINESS

The CONTRACTOR hereby represents and warrants that it has and will continue to maintain all licenses and approvals required to conduct its business and perform all requirements in this Agreement.

ARTICLE 9 - COMPLIANCE WITH LAWS

In performance of the Services, the CONTRACTOR will comply with applicable regulatory requirements including federal, state, special district, and local laws, rules, regulations, orders, codes, criteria, and standards.

ARTICLE 10 - SUB-CONTRACTING

10.1 The AUTHORITY reserves the right, in its sole and unfettered discretion, to accept the use of a subcontractor or to reject the selection of a particular subcontractor under this Agreement.

10.2 If a subcontractor fails to perform or make progress, as required by this Agreement, and it is necessary to replace the subcontractor to complete the work in a timely fashion, the CONTRACTOR shall promptly do so, subject to acceptance of the new subcontractor by the AUTHORITY.

ARTICLE 11 - FEDERAL AND STATE TAXES

The AUTHORITY is exempt from Federal Tax and State Sales and Use Taxes. Upon request, the AUTHORITY will provide an exemption certificate to CONTRACTOR. The CONTRACTOR shall not be exempted from paying sales tax to its suppliers for materials to fulfill contractual obligations with the AUTHORITY, nor shall the CONTRACTOR be authorized to use the AUTHORITY'S Tax Exemption Number in securing such materials.

ARTICLE 12 - AVAILABILITY OF FUNDS

The obligations of the AUTHORITY under this Agreement are subject to the availability of funds lawfully appropriated for its purpose by the Board of the Solid Waste Authority of Palm Beach County.

ARTICLE 13 - AUTHORITY'S RESPONSIBILITIES

AUTHORITY shall be responsible for providing access to all project sites, and providing information on hand required by CONTRACTOR, including existing reports, studies, financial information, and other required data that are available in the files of the AUTHORITY.

ARTICLE 14 - DEFAULT

14.1 The AUTHORITY may, by written notice of default to the CONTRACTOR, terminate the Agreement in whole or in part if the CONTRACTOR: a) fails to satisfactorily perform any provisions of this Agreement; or b) fails to make progress so as to endanger performance under the terms and conditions of this Agreement; or c) repeatedly fails to perform; or d) does not remedy any such failure within a period of ten (10) days (or such period as the Director of Purchasing Services may authorize in writing) after receipt of notice from the Director of Purchasing Services specifying such failure. In the event the AUTHORITY terminates this Agreement in whole or in part because of default of the CONTRACTOR, the AUTHORITY may, in its sole and unfettered discretion, procure goods and/or services similar to those required under this Agreement and the CONTRACTOR shall be liable for any excess costs incurred due to this action.

14.2 If it is determined that the CONTRACTOR was not in default or that the default was excusable (e.g., failure

due to causes beyond the control of, or without the fault or negligence of the CONTRACTOR), the rights and obligations of the parties shall be those provided in Article 15 – Termination for Convenience.

ARTICLE 15 – TERMINATION FOR CONVENIENCE

15.1 The Director of Purchasing Services may, whenever the interests of the AUTHORITY so require, terminate this Agreement, in whole or in part, for the convenience of the AUTHORITY. The Director of Purchasing Services shall give five (5) business days prior written Notice of Termination to the CONTRACTOR, specifying the portions of the Agreement to be terminated and when the termination is to become effective. If only portions of the Agreement are terminated, the CONTRACTOR has the right to withdraw, without adverse action by the AUTHORITY, from the entire Agreement.

15.2 Unless directed differently in the Notice of Termination, the CONTRACTOR shall incur no further obligations in connection with the terminated work and shall stop work to the extent specified on the date given in the Notice of Termination. Additionally, unless directed differently, the CONTRACTOR shall terminate outstanding orders and/or subcontracts related to the terminated work.

15.3 Unless the CONTRACTOR is in breach of this Agreement, the CONTRACTOR shall be paid for services rendered to the AUTHORITY'S satisfaction through the date of termination specified in the Notice of Termination.

ARTICLE 16 - UNCONTROLLABLE FORCES

16.1 Neither the AUTHORITY nor CONTRACTOR shall be considered to be in default of this Agreement if delays in or failure of performance shall be due to Uncontrollable Forces, the effect of which, by the exercise of reasonable diligence, the non-performing party could not avoid. The term "Uncontrollable Forces" shall mean any event which results in the prevention or delay of performance by a party of its obligations under this Agreement and which is beyond the reasonable control of the nonperforming party. It includes, but is not limited to fire, flood, earthquakes, storms, lightning, epidemic, pandemic, war, riot, civil disturbance, sabotage, and governmental actions.

16.2 Neither party shall, however, be excused from performance if nonperformance is due to forces which are preventable, removable, or remediable and which the nonperforming party could have, with the exercise of reasonable diligence, prevented, removed or remedied with reasonable dispatch. The non-performing party shall, within a reasonable time of being prevented or delayed from performance by an uncontrollable force, give written notice to the other party describing the circumstances and uncontrollable forces preventing continued performance of the obligations of this Agreement.

ARTICLE 17 – JURISDICTION, VENUE, WAIVER OF JURY TRIAL AND REMEDIES

This Agreement shall be governed by the laws of the State of Florida. Any and all legal action necessary to enforce the Agreement shall be in a State court of competent jurisdiction located exclusively in Palm Beach County. With the exception of the choice of law and venue provisions contained herein, no remedy conferred upon any party is intended to be exclusive of any other remedy, and each and every such remedy shall be cumulative and shall be in addition to every other remedy given hereunder or now or hereafter existing at law or in equity. No single or partial failure by any party to exercise any right, power, or remedy hereunder, shall preclude that party from exercising that right, power or remedy in the future. **THE AUTHORITY AND CONSULTANT FREELY AND VOLUNTARILY AGREE TO WAIVE ITS RESPECTIVE RIGHT TO A JURY TRIAL ON ANY ISSUE(S) SO TRIABLE.**

ARTICLE 18 – COMMERCIAL NON-DISCRIMINATION POLICY

As a condition of entering into this Agreement, the CONTRACTOR represents and warrants that it will comply with the AUTHORITY's Commercial Non-Discrimination Policy, as described in Section 6.3 of the AUTHORITY's Purchasing

Manual, including subsequent amendments thereto, if any. As part of such compliance, the CONTRACTOR shall not discriminate on the basis of race, color, religion, ancestry or national origin, gender, age, marital status, familial status, sexual orientation, gender identity or expression, disability, or genetic information in the solicitation, selection, hiring or commercial treatment of subcontractors, vendors, suppliers, or commercial customers, nor shall the CONTRACTOR retaliate against any person for reporting instances of such discrimination. The CONTRACTOR shall provide equal opportunity for subcontractors, vendors and suppliers to participate in all of its public sector and private sector subcontracting and supply opportunities, provided that nothing contained in this clause shall prohibit or limit otherwise lawful efforts to remedy the effects of marketplace discrimination that have occurred or are occurring in the AUTHORITY's relevant marketplace in Palm Beach County. The CONTRACTOR understands and agrees that a material violation of this clause shall be considered a material breach of this Agreement and may result in termination of this Agreement, disqualification or debarment of the CONTRACTOR from participating in AUTHORITY contracts, or other sanctions. This clause is not enforceable by or for the benefit of, and creates no obligation to, any third party. The CONTRACTOR agrees and understands that the provisions of Section 6.3 of the AUTHORITY's Purchasing Manual are incorporated herein by reference and that the CONTRACTOR is familiar with the contents of same.

ARTICLE 19 - WAIVER

A waiver by either AUTHORITY or CONTRACTOR of any breach of this Agreement shall not be binding upon the waiving party unless such waiver is in writing. In the event of a written waiver, such a waiver shall not affect the waiving party's rights with respect to any other or further or subsequent breach. The making or acceptance of a payment by either party with knowledge of the existence of a default or breach shall not operate or be construed to operate as a waiver of any further or subsequent default or breach.

ARTICLE 20 - SEVERABILITY

20.1 The invalidity, illegality, or unenforceability of any provision of this Agreement, or the occurrence of any event rendering any portion or provision of this Agreement void, shall in no way affect the validity or enforceability of any other portion or provision of the Agreement. Any void provision shall be deemed severed from the Agreement and the balance of the Agreement shall be construed and enforced as if the Agreement did not contain the particular portion or provision held to be void. The parties further agree to reform the Agreement to replace any stricken provision with a valid provision that comes as close as possible to the intent of the stricken provision.

20.2 The provisions of this section shall not prevent the entire Agreement from being void if a provision which is of the essence of the Agreement is determined to be void.

ARTICLE 21 - ENTIRETY OF AGREEMENT AND MODIFICATION

The AUTHORITY and the CONTRACTOR agree that this Agreement, including Exhibits and Attachments, and any matters incorporated by specific reference set forth the entire agreement between the parties, and that there are no promises or understandings other than those stated herein. This Agreement supersedes all prior agreements, contracts, proposals, representations, negotiations, letters or other communications between the AUTHORITY and CONTRACTOR pertaining to the services, whether written or oral. None of the provisions or terms and conditions contained in this Agreement may be added to, amended, modified, superseded or otherwise altered except by written instrument executed by the parties thereto.

ARTICLE 22 - SUCCESSORS AND ASSIGNS

AUTHORITY and CONTRACTOR each binds itself and its partners, successors, executors, administrators, assigns and legal representatives to the other party and its partners, successors, executors, administrators, assigns and legal representative. CONTRACTOR shall not assign this Agreement without the prior express written approval of the AUTHORITY in its sole discretion via executed amendment.

ARTICLE 23 - CONTINGENT FEES

The CONTRACTOR warrants that it has not employed or retained any company or person, other than a bona fide employee working solely for the CONTRACTOR to solicit or secure this Agreement and that it has not paid or agreed to pay any person, company, corporation, individual or firm, other than a bona fide employee working solely for the CONTRACTOR, any fee, commission, percentage, gift or any other consideration contingent upon or resulting from the award or making of this Agreement.

ARTICLE 24 - TRUTH-IN-NEGOTIATION CERTIFICATE

24.1 Execution of this Agreement by the CONTRACTOR shall act as the execution of a truth-in-negotiation certificate certifying that the wage rates and costs used to determine the compensation provided for in this Agreement are accurate, complete, and current as of the Effective Date of the Agreement.

24.2 The said rates and costs shall be adjusted to exclude any significant sums should the AUTHORITY determine that the rates and costs were increased due to inaccurate, incomplete or noncurrent wage rates or due to inaccurate representations of fees paid to outside consultants. The AUTHORITY shall exercise its rights under this 'Certificate" within one (1) year following payment.

ARTICLE 25 - OWNERSHIP OF DOCUMENTS

CONTRACTOR shall be required to cooperate with other consultants relative to providing information requested in a timely manner and in the specified form. Any and all documents, records, disks, original drawings, or other information shall become the property of the AUTHORITY for its use and/or distribution as may be deemed appropriate by the AUTHORITY in its sole and unfettered discretion.

ARTICLE 26 - PUBLIC RECORDS, ACCESS AND AUDITS

26.1 It is the intent of this Article to maintain compliance with the Florida Public Records Law, Ch. 119, Florida Statutes, as amended.

26.2 **DESIGNATED RECORDS CUSTODIAN CONTACT INFORMATION:**

IF THE CONTRACTOR HAS QUESTIONS REGARDING THE APPLICATION OF CHAPTER 119, FLORIDA STATUTES, THE CONTRACTOR'S DUTY TO PROVIDE PUBLIC RECORDS RELATING TO THIS AGREEMENT, CONTACT THE CUSTODIAN OF PUBLIC RECORDS AT:
RECORDS MANAGER
SOLID WASTE AUTHORITY OF PALM BEACH COUNTY
7501 NORTH JOG ROAD
WEST PALM BEACH, FL 33412
561-640-4000 EXT. 4606
RECORDSCUSTODIAN@SWA.ORG

26.3 The CONTRACTOR shall maintain records related to all charges, expenses, and costs incurred in estimating and performing the work, in accordance with the timeframes and classifications for records retention as per the General Records Schedule GS1-SL for State and Local Government Agencies (see: https://dos.myflorida.com/library-archives/records-management/general-records-schedules/) after completion or termination of this Contract. Upon AUTHORITY'S request, CONTRACTOR shall provide AUTHORITY with access to such records during normal business hours at a location within Palm Beach County for purposes of

inspection or audit.

26.4 Notwithstanding anything herein to the contrary, the CONTRACTOR expressly acknowledges that: i) it is providing a specific service to the AUTHORITY in the performance of this Contract; ii) acting on behalf of the AUTHORITY in the performance of this Contract; iii) that it has read and is familiar with the Florida Public Records Law, Ch. 119, Florida Statutes, as amended, and both understand its responsibility and obligation to comply with this law; and iv) to the extent any question(s) arise regarding its duties to produce public records, it shall contact the Records Manager with same.

26.5 Any public records requests directed to, or related in any way to this contract shall be directed solely to the Records Manager. If the requested records are not in the possession of the Records Manager, they shall immediately notify the CONTRACTOR and the CONTRACTOR must provide the records or allow access to the records within a reasonable time. A CONTRACTOR who fails to provide the records to the public agency within a reasonable time may be subject to penalties under Florida Statutes (F.S) §119.10, and §119.10(2) provides that a person who willfully and knowingly violates the Public Records Act commits a misdemeanor of the first degree, which is punishable by up to a year in jail and a fine not to exceed $1,000.

26.6 Therefore, the CONTRACTOR is required to:

1) Keep and maintain public records that ordinarily and necessarily would be required by the AUTHORITY in order to perform the service;

2) Upon AUTHORITY's request from the AUTHORITY's Records Manager; provide the AUTHORITY with a copy of the requested records to allow the records to be inspected or copied within a reasonable time on the same terms and conditions that the AUTHORITY would provide the records at a cost that does not exceed the cost provided by Florida law;

3) Ensure that public records that are exempt or confidential and exempt from public records disclosure requirements are not disclosed except as authorized by law for the duration of the Agreement term and following the completion of the Agreement if the CONTRACTOR does not transfer the records to the AUTHORITY; and

4) Upon completion of the Agreement, transfer at no cost to the AUTHORITY, all public records in possession of the CONTRACTOR or keep and maintain public records to the AUTHORITY upon completion or termination of the Agreement; the CONTRACTOR shall destroy any duplicate public records that are exempt or confidential and exempt from public records disclosure requirements. If the CONTRACTOR keeps and maintains public records upon completion of the Agreement, the CONTRACTOR shall meet all applicable requirements for retaining public records. All records stored electronically must be provided to the AUTHORITY, upon request from the AUTHORITY's Records Manager, either during performance of the Agreement or after termination or completion of the Agreement in a format that is compatible with the information technology systems of the AUTHORITY.

26.7 Failure of the CONTRACTOR to comply with these requirements shall be a material breach of this Contract.

26.8 CONTRACTOR shall maintain financial and program records to justify all charges and costs incurred in performing the work for at least three (3) years following final payment by the AUTHORITY as Federal Emergency Management Agency (FEMA) sub-grantee as required by 2 CFR 200.333. The AUTHORITY shall have access to such books, records, and documents as required in this section for the purpose of inspection or audit.

26.9 In the event records retention requirements in Florida Statutes Chapter 119 and 257 exceed those of FEMA, the records shall be retained to comply with the State of Florida requirements.

ARTICLE 27 - INSPECTOR GENERAL

Palm Beach County has established the Office of the Inspector General (OIG), Ordinance No. 2009-049 which is authorized and empowered to review past, present and proposed county contracts, transactions, accounts and records. The AUTHORITY has entered into an Interlocal Agreement (ILA) for Inspector General Services. This agreement provides for the Inspector General to provide services to the AUTHORITY in accordance with the authority, functions and powers set out in the Palm Beach County Office of Inspector General Ordinance. All parties doing business with the AUTHORITY and receiving AUTHORITY funds shall fully cooperate with the Inspector General including providing access to records relating to this agreement. The Inspector General has the power to subpoena witnesses, administer oaths, require the production of records, and audit, investigate, monitor, and inspect the activities of the CONTRACTOR, its officers, agents, employees, and lobbyists in order to ensure compliance with contract specifications and detect corruption and fraud. Failure to cooperate with the Inspector General or interference or impeding any investigation shall be in violation of Ordinance 2009-049, and punished pursuant to Section 125.69, Florida Statutes, in the same manner as a second-degree misdemeanor.

ARTICLE 28 - NOTICE

Any notice, demand, communication, or request required or permitted hereunder shall be in writing and delivered in person or sent by certified mail, postage prepaid as follows:

AS TO AUTHORITY

Solid Waste Authority of Palm Beach County
7501 North Jog Road
West Palm Beach, Florida 33412

Attention: Executive Director
Office No.: 561-640-4000 Fax No.: 561-640-3400

AS TO CONTRACTOR

CrowderGulf Joint Venture, Inc.
5629 Commerce Boulevard
East Mobile, AL. 36619

Attention: Ashley Ramsay-Naile, President
Office No.: 646-872-1548 Fax No.: 251-459-7433 E-Mail: jramsay@crowdergulf.com

Notices shall be effective when received at the addresses as specified above. Changes in the respective addresses to which such notice is to be directed may be made from time to time by either party by written notice to the other party. Facsimile transmission is acceptable notice effective when received, however, facsimile transmissions received (i.e.; printed) after 5:00 p.m. or on weekends or holidays, will be deemed received on the next business day. The original of the notice must additionally be mailed as required herein.

Nothing contained in this Article shall be construed to restrict the transmission of routine communications between representatives of CONTRACTOR and AUTHORITY.

ARTICLE 29 - CONTRACT ADMINISTRATION

Services of CONTRACTOR shall be under the general direction of the **Chief Operations Officer**, or designee, who shall act as the AUTHORITY'S representative during the term of the Agreement.

ARTICLE 30 - KEY PERSONNEL

CONTRACTOR shall notify AUTHORITY in the event of key personnel changes which might affect this Agreement. Notification shall be made within ten (10) days of said changes. AUTHORITY has the right to reject any proposed changes in key personnel. The following personnel shall be considered key personnel:

Nick Pratt – Director of Field Operations
Cell No.: 251-402-5566 E-Mail: npratt@crowdergulf.com

John Campbell – Regional Director - East
Cell No.: 859-963-8672 E-Mail: jcampbell@crowdergulf.com

Buddy Young – Regional Director - West
Cell No.: 940-597-4252 E-Mail: byoung@crowdergulf.com

Don Madio – Regional Manager - FL
Cell No.: 813-285-8749 E-Mail: dmadio@crowdergulf.com

Reid Loper – Vice President/Senior Project Manager
Cell No.: 678-477-3755 E-Mail: rloper@crowdergulf.com

Wesley Naile – Contracts Manager
Cell No.: 251-533-5585 E-Mail: wnaile@crowdergulf.com

Margaret Wright– Documentation Director/PHD
Cell No.: 251-604-6346 E-Mail: mwright@crowdergulf.com

Leigh Anne Ryals – Emergency Management & Quality Control Specialist
Cell No.: 251-751-8660 E-Mail: lryals@crowdergulf.com

Jeff Zemlick – Safety Manager
Cell No.: 251-509-9422 E-Mail: jzemlick@crowdergulf.com

Wilber Ledet – Senior Project Manager
Cell No.: 228-326-5915 E-Mail: wledet@crowdergulf.com

Matt Lucas – Senior Project Manager – East Coast
Cell No.: 609-731-2858 E-Mail: mlucas@crowdergulf.com

Andrew Sprinkle – Project Manager
Cell No.: 251-423-1100 E-Mail: atsprinkle@crowdergulf.com

Howard Turner – Project Manager – East Coast
Cell No.: 804-814-6197 E-Mail: hturner@crowdergulf.com

Isam Brisco – Project Manager
Cell No.: 512-373-0586 E-Mail: ibrisco@crowdergulf.com

Joe Hayes – Project Manager
Cell No.: 561315-1360 E-Mail: jhayes@crowdergulf.com

Lew Najor– Project Manager
Cell No.: 850-393-9985 E-Mail: lnajor@crowdergulf.com

Barton Holmes– Project Manager
Cell No.: 864-906-1671 E-Mail: barton@crowdergulf.com

ARTICLE 31 – EQUAL BUSINESS OPPORTUNITY PROGRAM:

The Governing Board of the AUTHORITY has implemented the Economic Inclusion Policy administered by the Equal Business Opportunity (EBO) Program Office to ensure that all segments of its business population, including, but not limited to local, small, minority, and women-owned businesses, have an equitable opportunity to participate in the AUTHORITY'S procurement process, in accordance with Section 6.1 through 6.4 of the Purchasing Manual. Program tools and solicitation incentives are hereby referred to as the Affirmative Procurement Initiatives (API).

31.1 **Affirmative Procurement Initiative (API):**

The AUTHORITY has NOT applied an Affirmative Procurement Initiative to this Agreement.

ARTICLE 32 - SCRUTINIZED COMPANIES

32.1 As provided in F.S. 287.135, by entering into this Agreement or performing any work in furtherance hereof, the CONTRACTOR certifies that it, its affiliates, suppliers, subcontractors and consultants who will perform hereunder, have not been placed on the Scrutinized Companies With Activities in Sudan List or Scrutinized Companies With Activities in The Iran Petroleum Energy Sector List created pursuant to F.S. 215.473, or is engaged in business operations in Cuba or Syria.

If the AUTHORITY determines, using credible information available to the public, that a false certification has been submitted by CONTRACTOR, this Agreement may be terminated and a civil penalty equal to the greater of $2 million or twice the amount of this Agreement shall be imposed, pursuant to F.S. 287.135. Said certification must also be submitted at the time of renewal of this Agreement.

32.2 As provided in F.S. 287.135, by entering into this Agreement or performing any work in furtherance hereof, this Agreement certifies that it, its affiliates, suppliers, subcontractors, and consultants who will perform hereunder, have not been placed on the Scrutinized Companies that Boycott Israel List, or is engaged in a boycott of Israel, pursuant to F.S. 215.4725.
If the AUTHORITY determines, using credible information available to the public, that a false certification has been submitted by CONTRACTOR, this may be terminated and a civil penalty equal to the greater of $2 million or twice the amount of this shall be imposed, pursuant to F.S. 287.135. Said certification must also be submitted at the time of renewal of this Agreement.

ARTICLE 33 - AGREEMENTS WITH OTHER GOVERNMENTAL ENTITIES

33.1 The CONTRACTOR agrees that this Agreement constitutes an offer to all State and local government agencies of the State of Florida under the same terms and conditions, for the same prices and for the same effective period as specified in this Agreement should the CONTRACTOR deem it in the best interest of their business to do so.

33.2 The Agreement in no way restricts or interferes with any State or local government agencies of the State of Florida from re-solicitation.

ARTICLE 34 – THIRD PARTY BENEFICIARY DISCLAIMER

It is not the intention of these documents to create third party beneficiary status in any person or entity that is not a direct party to this Agreement, and no language in this Agreement should be construed or interpreted as creating a third party beneficiary.

ARTICLE 35 – E-VERIFY – EMPLOYMENT ELIGIBILITY

35.1 The CONTRACTOR certifies, warrants and represents that it is in compliance with Section 448.095, Florida Statutes, as may be amended and that CONTRACTOR shall: (1) register with and use the E-Verify System (E-Verify.gov) to electronically verify the employment eligibility of all newly hired workers; and (2) has verified that all of the CONTRACTOR'S subcontractors performing the duties and obligations of this Agreement are registered with and use the E-Verify System to electronically verify the employment eligibility of all newly hired workers. CONTRACTOR shall obtain from each of its subcontractors an affidavit stating that the subcontractor does not employ, contract with, or subcontract with an Unauthorized Alien, as that term is defined in Section 448.095(1)(k), Florida Statutes, as may be amended. CONTRACTOR shall maintain a copy of any such affidavit from a subcontractor for, at a minimum, the duration of the subcontract and any extension thereof. This provision shall not supersede any provision of this Agreement which requires a longer retention period.

35.2 AUTHORITY shall terminate this Agreement if it has a good faith belief that CONTRACTOR has knowingly violated Section 448.09(1), Florida Statutes, as may be amended. If AUTHORITY has a good faith belief that one of CONTRACTOR'S subcontractor(s) has knowingly violated Section 448.09(1), Florida Statutes, as may be amended, AUTHORITY shall notify CONTRACTOR to terminate its contract with the subcontractor and CONTRACTOR shall immediately terminate its contract with the subcontractor. If AUTHORITY terminates this Agreement pursuant to the above, CONTRACTOR shall be barred from being awarded a future contract by AUTHORITY for a period of one (1) year from the date on which the Agreement was terminated. In the event of such contract termination, CONTRACTOR shall also be liable for any additional costs incurred by AUTHORITY as a result of the termination.

ARTICLE 36 – CONFIDENTIALITY

No reports, information, computer programs, documentation, and/or data given to, or prepared or assembled by the CONTRACTOR under this Agreement shall be made available to any individual or organization by the CONTRACTOR without prior written approval of the AUTHORITY.

ARTICLE 37 – PAYMENT ADJUSTMENT SCHEDULE

37.1 The AUTHORITY acknowledges the fluctuating nature of prices.

37.2 Annual Non-Fuel: The Non-Fuel Adjustment shall be applied to those rates subject to adjustment and as provided within this Agreement. For the purpose of this Agreement, the Non-Fuel component is assumed to represent 90% of the CONTRACTOR's costs. Therefore, 90% of the approved rates shall be so adjusted:

The rates shall be adjusted as follows:

The rates shall be adjusted annually, commencing on the first anniversary date, by the change in the Water and Sewer and Trash Collection Services Index, Series ID CUSR0000SEHG, as published by the United States Department of Labor, Bureau of Labor Statistics (jwww.bls.gov). The change in the index shall be calculated by dividing the average of the index over the twelve-month period ending the December preceding the effective date of the adjustment (January – December 2022) by the average of the index over the twelve-month period from January 2021 through December 2021. The first Annual Non-Fuel adjustment shall be effective May 7, 2023 to May 6, 2024.

For example:

For the Contract year beginning May 7, 2023, the average of the index over the twelve-month period from January 2022 through December 2022 shall be divided by the average of the index over the twelve-month period from January 2021 through December 2021, multiplying the result by ninety (90) percent of the contract or AUTHORITY established price, and subtracting ninety (90) percent of the contract or AUTHORITY established price.

The surcharge/credit shall be rounded to the nearest cent.

Formula:

Most Recent Year Average / Prior Year Average x .90 x Rate – (.90 x Rate) = Annual Adjustment

Calendar:

Annual Payment Adjustment Calendar

April 2023	April 2024

Extension Clause Annual Payment Adjustment Schedule

April 2025	April 2026	April 2027

37.3 **Activation Fuel Adjustment (Fuel Surcharge/Credit)**

The rates subject to adjustment shall be subject to a fuel price surcharge/credit for fluctuations in the price of fuel. For the purpose of this Agreement, fuel is assumed to represent 10% of the Contractor's costs therefore 10% of the approved rates shall be so adjusted. Fuel adjustment shall be calculated and effective upon activation.

The rates shall be adjusted as follows:

For the rates subject to adjustment, a fuel surcharge/credit shall be charged/credited basis based on the percentage change in the average price of fuel as published by the Oil Price Information Service (OPIS) and measured by the OPIS Standard Rack, OPIS No. 2 Distillate Gross Prices, Unbranded Average for Miami, Florida between the month of **January 2022 (Base)** and the most recent month available upon activation.

Fuel Adjustment does not use a floor or ceiling and provides adjustments in either direction without limit.

The surcharge/credit shall be rounded to the nearest cent.

Formula:

Most recent OPIS (at activation) / Base x .10 x Rate – (.10 x Rate) = Fuel Adjustment (for duration of activation)

For example:

Should activation occur October 2023, the fuel surcharge/credit shall be calculated by dividing the reported unbranded average price for September 2023 by the Base (unbranded average price for January 2022), multiplying the result by ten (10) percent of the contract or Authority established price, and subtracting ten (10) percent of the contract or Authority established price.

37.4 In the event that either of these indices is no longer available, the parties shall mutually agree to a replacement index. The value of the adjustment will be determined by the AUTHORITY.

ARTICLE 38 – ORDER OF AGREEMENT ACTIVATION/LOCATION ASSIGNMENT

The CONTRACTOR has entered into a contingent Agreement with the AUTHORITY for Hurricane/Disaster Debris Removal, Reduction, and Disposal. The Agreement awarded will be activated on an as-needed basis as solely determined by the AUTHORITY. The AUTHORITY may activate, assign/reassign any or all CONTRACTORS at any time as may be deemed appropriate depending upon the circumstance(s), the event, or any other condition which may warrant such action as it determines in its sole and unfettered discretion.

ARTICLE 39 – TASK ORDER/PERFORMANCE

Task Orders shall be executed bilaterally, and the scope of services and format of Task Orders shall be mutually agreed to by the CONTRACTOR and AUTHORITY. Performance will be measured by the metrics established in each Task Order. After 1/3 and again after 2/3 of the stipulated number of days of work in the Task Order have elapsed, the CONTRACTOR(S) shall provide a written progress report to the AUTHORITY for review and acceptance. The AUTHORITY shall have the right to correct for CONTRACTOR default or underperformance by any means it deems in its best interest. CONTRACTOR will be required to provide a daily report of quantity of work performed under each Task Order. The daily report shall be submitted by 11:00 a.m. or earlier the following morning.

ARTICLE 40 – BONDS

CONTRACTOR shall maintain a Proposal Bond in the sum of $500,000. The CONTRACTOR's Proposal Bond will be returned to the CONTRACTOR in exchange for and acceptance of an appropriate size bond as determined by the AUTHORITY after assessment of damage and definition of the CONTRACTOR's scope of service. In case of hurricane caused damage, a Category 1 storm would require a $2,000,000 Bond, a Category II would require a $4,000,000 Bond, a Category III would require a $6,000,000 Bond, a Category IV would require an $8,000,000 Bond, and a Category V would require a $10,000,000 Bond. The Bond required would be a Performance and Payment Bond, Attachment G. The cost of the Bond is included in the unit rates in the Fee Schedule, Exhibit B. The CONTRACTOR shall maintain the Proposal Bond in effect until the Performance and Payment Bond is submitted to and accepted by the AUTHORITY. If the CONTRACTOR fails to supply a Performance and Payment Bond, the AUTHORITY shall be entitled to retain the Proposal Bond to rectify the CONTRACTOR's unacceptable performance. Pending successful annual CONTRACTOR recertification, the Proposal Bond shall be in effect for the entire term of the Agreement, except for period(s) of time when a Performance and Payment Bond is in effect.

ARTICLE 41 – FLORIDA HIGHWAY ADMINISTRATION (FHWA) FORM 1273

41.1 This Agreement incorporates all of the provisions set forth in the document commonly known as FHWA Form 1273, Attachment E, which is attached hereto and incorporated by reference as part of this Agreement. The term "contractor" as used in Attachment E shall apply to and mean the CONTRACTOR who may be referred to in Attachment E as the "prime contractor", "bidder", "proposer", "prospective primary participant", "prospective participant", "participant" or the like. The CONTRACTOR will perform the duties and obligations of the other contracting party regardless of the description or label used in Form 1273, Attachment E.

41.2 The CONTRACTOR shall comply with the Davis-Bacon wages rates to the extent applicable to the work performed under this Agreement. The provisions of the Davis-Bacon Act do not apply to debris removal work unless such work is done in conjunction with a construction project or "linked" to a particular Federal Highway. Wage rate tables may be found at http://www.dot.state.fl.us/construction/wage.shtm. Said wage rate tables are incorporated into and made part of this Agreement by reference.

ARTICLE 42 – BUY AMERICA REQUIREMENTS

The CONTRACTOR agrees to comply with the requirements of the Federal Buy America law (See 23 U.S.C. 313, ISTEA Sections 1041(a) and 1048(a), as they may be amended from time to time) as they relate to Federal-aid contracts and the use of steel and iron produced in the United States. A description of the requirements of Buy America is set forth in Attachment F, which is attached hereto and incorporated by reference as part of this Agreement. CONTRACTOR shall provide a certification statement regarding the origin of all materials or products covered under the Buy America provisions and used in its performance of the Agreement in accordance with the requirements of law and the AUTHORITY, FDOT, and FEMA, to the extent applicable.

ARTICLE 43 – DISADVANTAGED BUSINESS ENTERPRISES

43.1 This provision shall supplement Article 31 "Equal Business Opportunity Program" of the Agreement. The Agreement is subject to the requirements of 49 CFR Part 26. The CONTRACTOR shall not discriminate on the basis of race, color, national origin, or sex in the performance of the Agreement. The CONTRACTOR shall carry out the applicable requirements of 49 CFR Part 26 in the award and administration of this U.S. DOT-assisted contract. Failure by the CONTRACTOR to carry out these requirements is a material breach of Agreement, which may result in the termination of this Agreement or such other remedy as the AUTHORITY deems appropriate, including but not limited to the withholding of payments. Each subcontract the CONTRACTOR signs with a subcontractor must include the assurance in this paragraph. (See 49 CFR 26.13). Upon request, the CONTRACTOR will provide the AUTHORITY with a copy of each subcontract it enters into.

43.2 The CONTRACTOR is required to pay its subcontractors performing work related to this Agreement for satisfactory performance of that work no later than thirty (30) days after the CONTRACTOR's receipt of payment for that work from the AUTHORITY. The CONTRACTOR may not hold any retainage from its subcontractors unless pursuant to an agreement approved by the AUTHORITY. The CONTRACTOR shall return all retainage payments withheld within thirty (30) days after the subcontractor's work has been satisfactorily completed.

43.3 The CONTRACTOR shall, on a monthly basis, submit payment certifications, including a certification regarding their truth and accuracy, for all payments it is seeking and certifications from all subcontractors indicating who has been paid and how. The certifications shall comply with all Federal and State requirements regarding the reporting of DBE participation. The CONTRACTOR shall, if required by the AUTHORITY or FDOT, report its DBE participation monthly on the Equal Opportunity Reporting System located on the Florida Department of Transportation's (FDOT) website found at www.bipincwebapps.com/bizwebflorida/. Audits may be conducted to review payments to DBE subcontractors. The CONTRACTOR will fully cooperate with the AUTHORITY, FDOT, or FEMA regarding the monitoring of subcontractors and payments made thereto.

ARTICLE 44 – CERTIFICATION REGARDING SUSPENSION AND DEBARMENT

44.1 This Agreement is a covered transaction for purposes of 49 CFR Part 29. Accordingly, the CONTRACTOR shall verify that neither the CONTRACTOR, nor its principals, as defined at 49 CFR 29.995, or affiliates, as defined at 49 CFR 29.905, are excluded or disqualified from participation in this Agreement as defined at 49 CFR 29.940 and 29.945.

44.2 The CONTRACTOR agrees to comply with the requirements of 49 CFR 29, Subpart C throughout the term of this Agreement. The CONTRACTOR must include the requirement to comply with 49 CFR 29, Subpart C in any lower tier covered transaction it enters into. CONTRACTOR's certification is a material representation of fact relied upon by the AUTHORITY. If it is later determined that the CONTRACTOR knowingly rendered an erroneous certification, in addition to remedies available to the AUTHORITY, the State or Federal government may pursue any available remedies, including but not limited to suspension and/or debarment. The CONTRACTOR further agrees that it will include a provision requiring such compliance in all of its subcontracts or lower tier covered transactions.

ARTICLE 45 – ACCESS TO RECORDS AND THEIR RETENTION

45.1 This provision shall supplement Article 26 of this Agreement. The CONTRACTOR shall maintain adequate records to justify all charges, expenses, and costs incurred in estimating and performing the Agreement for at least five (5) years after completion or termination of this Agreement or FDOT's closure of an "emergency event" with the Florida Division of Emergency Management, whichever comes last, except in the event of litigation or settlement of claims arising from the performance of the Agreement, the CONTRACTOR agrees to maintain said records until all litigation, claims, appeals or exceptions related thereto have been resolved. The records shall be maintained at a location in Palm Beach County, Florida or such other location in Florida approved by the AUTHORITY.

45.2 The CONTRACTOR shall make all of its books, records, and other documents related, in any manner to its or its subcontractors' performance of the Agreement, available to the AUTHORITY and any other funding entity (e.g. FDOT, FEMA, the Comptroller General of the U.S. or any of their authorized representatives) for the purpose of examination, audit, reproduction, excerpts and transcripts, during normal business hours, at the CONTRACTOR's place of business or if CONTRACTOR's place of business is not located in Palm Beach County, then at the location for maintenance of records referenced above. The CONTRACTOR shall also require its subcontractors to make their books, records and documents available for examination, audit, reproduction, excerpts, and transcripts, for the same duration and in the same manner, and at or near the same locations required herein of CONTRACTOR.

ARTICLE 46 – AUDIT REQUIREMENTS

This provision shall supplement Article 26 of this Agreement. The CONTRACTOR agrees that audits may be undertaken of its records related to its performance of the Agreement as may be authorized or required under OMB Circular A-133, as revised. The CONTRACTOR agrees that it will comply, execute any necessary documents and fully cooperate with the AUTHORITY and any State and/or Federal funding agency(ies), including but not limited to FDOT, Florida's Auditor General, FEMA, or any of their authorized representatives, in any audit or monitoring procedures or processes any such entity(ies) may undertake related to CONTRACTOR's performance of the Agreement in order to properly and satisfactorily complete the audit, if any.

ARTICLE 47 – NATIONAL ENVIRONMENTAL POLICY ACT (NEPA)

The CONTRACTOR shall cooperate with the AUTHORITY, FDOT, and FEMA so as to assure that all activities related to the performance of this Agreement comply with the requirements of the National NEPA of 1969, as amended, and the regulations and guidance related thereto.

ARTICLE 48 – AMERICANS WITH DISABILITIES ACT

The CONTRACTOR does hereby represent and certify that it will comply with all the requirements of the Americans with Disabilities Act of 1990 (42 USC 12102, et seq.), as it may be amended, and all applicable impending regulations of the U.S. DOT, FEMA, and other Federal-aid agencies.

ARTICLE 49 – COMPLIANCE WITH TITLE VI, TITLE VII, AND OTHER FEDERAL LAWS AND REGULATIONS

The CONTRACTOR does hereby represent and certify that it will comply with all the requirements imposed by Title VI of the Civil Rights Act of 1964 and Title VII of the Civil Rights Act of 1968, as they have been and may be modified from time to time (42 USC 2000d et. Seq. and 3601 et seq.) and the Age Discrimination and Employment Act of 1967 and Section 303 of the Age Discrimination Act of 1975, as amended (42 USC 6102), and all applicable Federal laws and regulations, policies, procedures, and directives of the U.S.DOT, FEMA and/or other Federal-aid agencies, as they may be promulgated and amended from time to time.

ARTICLE 50 – CONVICT LABOR PROHIBITION

The CONTRACTOR does hereby represent and certify that it will comply with the convict labor prohibition in 23 U.S.C. 114, and all implementing regulations thereto.

ARTICLE 51 – CERTIFICATION REGARDING LOBBYING ACTIVITIES

A Bidder or Proposer for an award of certain Federal-Aid contracts in the amount of $100,000 or more, must file the certification required by 49 CFR Part 2. The CONTRACTOR confirms that by signing and submitting a Bid or Proposal for the work covered by this Agreement, it made the certification described in Section X1 of the Attachment F herein.

ARTICLE 52 – DEPARTMENT OF HOMELAND SECURITY (DHS) SEAL, LOGO, AND FLAGS

The CONTRACTOR shall not use the DHS seal(s), logos, crests, or reproductions of flags or likenesses of DHS agency officials without specific FEMA pre-approval.

ARTICLE 53 – NO OBLIGATION BY FEDERAL GOVERNMENT

The Federal Government is not a party to this Agreement and is not subject to any obligations or liabilities to the AUTHORITY, CONTRACTOR, or any other party pertaining to any matter resulting from this Agreement.

ARTICLE 54 – PROGRAM FRAUD AND FALSE OR FRAUDULENT STATEMENTS OR RELATED ACTS

The CONTRACTOR acknowledges that 31 U.S.C Chapter 38 (Administrative Remedies for False Claims and Statements) applies to the CONTRACTOR's actions pertaining to this Agreement.

REMAINDER OF PAGE LEFT BLANK INTENTIONALLY

In Witness Whereof, AUTHORITY, and CONTRACTOR have made and executed this Agreement all as of the day and year first above written.

SOLID WASTE AUTHORITY OF PALM BEACH COUNTY:

WITNESS:

1. _____

2. _____

By: _____
Daniel Pellowitz
Executive Director

(SEAL)

APPROVED AS TO LEGAL SUFFICIENCY:

By: Howard J. Falcon III
Digitally signed by Howard J. Falcon III
DN: DC=org, DC=pbcgov, OU=Enterprise, OU=ATT, OU=Users, CN=Howard J. Falcon III, E=hfalcon@pbcgov.org
Reason: I am the author of this document
Location: your signing location here
Date: 2022.04.22 14:40:16-04'00'
Foxit PDF Editor Version: 11.2.1

Howard J. Falcon, III
General Counsel

APPROVED AS TO TERMS AND CONDITIONS:

_____
Signature

Patrick D Carroll
Print Name

CDO
Title

ATTEST:

_____
Corporate Secretary

WITNESS:

1. Wesley Naile

2. _____

CROWDERGULF JOINT VENTURE, INC.:

Ashley Ramsay-Naile
Authorized Signature

Ashley Ramsay-Naile
Print Name

President
Title

_____
Date

(Affix Corporate Seal)

Approved by Authority Board on April 13, 2022, Item No.: 9. C.1

EXHIBIT "A"

SCOPE OF WORK

1. PROJECT DESCRIPTION AND REQUIREMENTS:

A. The AUTHORITY seeks COINTRACTOR to remove and lawfully dispose of disaster-generated debris (other than hazardous materials and household putrescible garbage) from public property and public rights-of-way, and to setup and operate Temporary Debris Management Site(s) (TDMS) in Palm Beach County, Florida, immediately after a hurricane or other disaster.

B. The objective of this RFP and subsequent contracting activity is to secure the services of an experienced CONTRACTOR who is capable of efficiently removing large volumes of disaster-generated debris from a large area in a safe, timely and cost-effective manner and lawfully disposing of all debris. CONTRACTOR must be capable of assembling, directing, and managing a work force that can complete the debris management operations in 120 days or less. The duration of effort/completion dates of all tasks will be determined jointly by the AUTHORITY and CONTRACTOR. This determination will be set in writing in appropriate Task Order(s).

C. The CONTRACTOR shall perform all work in strict accordance with Federal Emergency Management Agency (FEMA) guidelines in order to maximize recovery of reimbursable expenses. This task shall include the provision of audit quality documentation as required by and acceptable to FEMA for all work accomplished.

D. The CONTRACTOR may be required, at the AUTHORITY'S discretion, to be under the direction of an agent of the AUTHORITY.

E. While intended to cover debris management needs in any major disaster scenario, the primary focus is on the threat of hurricane damage to Palm Beach County, Florida. The planning standards used for this project are based on the anticipated impacts of a named storm event or major flood impacting Palm Beach County, Florida. The AUTHORITY intends to enter into contingency Agreement(s) as further defined herein, to provide emergency debris removal and disposal services as required by the AUTHORITY.

2. INTRODUCTION:

A. The AUTHORITY'S disaster recovery planning includes considerations for removing and processing the volumes and types of debris expected to be generated by a major disaster such as a hurricane or major flood and includes procedures for disposing of that debris. The planning approach is formulated in part on the concept of strategic pre-positioning of plans and resources necessary for timely, safe, coordinated recovery operations, including removal of debris from public property and rights-of-way throughout Palm Beach County using a combination of county, municipal, and CONTRACTOR forces.

B. If activation is required, the AUTHORITY intends to activate contracts on an as-needed basis as solely determined by the AUTHORITY. The AUTHORITY intends to activate the CONTRACTORS in the order of final ranking as best meets the needs of the AUTHORITY. The AUTHORITY reserves the right in its sole and unfettered discretion, to assign/reassign any or all CONTRACTORS at any time as may be deemed appropriate depending upon the

circumstance(s), the event, or any other condition which may warrant such action.

C. The AUTHORITY envisions the need for four (4) CONTRACTORS to carry out the debris removal and disposal work throughout Palm Beach County. The CONTRACTOR must have the experience and capability to manage a major workforce with multiple subcontractors and to cover the expenses associated with a major recovery operation prior to the initial AUTHORITY payment and between subsequent payments, as well as the capacity to provide the necessary bonds and insurance. The CONTRACTOR must also have an established management team, an established network of resources to provide the necessary equipment and personnel, comprehensive debris removal, volume reduction operations plan, and demonstrable experience in major disaster recovery projects.

D. The Agreement(s) to be awarded under this RFP will be contingency Agreement(s) that will be activated only in the face of an emergency. As such, no compensation will accrue to the CONTRACTOR unless and until the Agreement is activated either in anticipation of a natural disaster or immediately after such disaster.

E. The CONTRACTOR who receives an Agreement for the work, will be required to participate in certain AUTHORITY directed disaster recovery training and/or exercises, 1 to 2 days each year, at no cost to the AUTHORITY.

F. The AUTHORITY does not guarantee a CONTRACTOR will be activated if awarded an Agreement.

3. PLANNING STANDARD FOR DEBRIS REMOVAL AND DISPOSAL:

The AUTHORITY'S goal is to complete the debris removal and disposal process in 120 days following the storm event. This assumes that the entire area of the county will be accessible within that period. Due to the low elevation and potential for flooding, some areas might not be accessible for several weeks after a major natural disaster. The CONTRACTOR must be aware that it might not be possible to initiate operations in all parts of the county simultaneously immediately after a storm.

4. DEBRIS MANAGEMENT:

A. Planning for debris management operations is a function of the AUTHORITY as a supporting agency to the Palm Beach County Department of Engineering and Public Works. The AUTHORITY'S Emergency Management Coordinator will direct the debris removal and disposal operations.

B. In addition to using AUTHORITY forces and equipment, the AUTHORITY intends to execute four (4) debris removal and disposal Agreements on a contingency basis for the purpose of having CONTRACTOR(S) immediately available and committed to assisting the AUTHORITY in the aftermath of a major disaster. Each CONTRACTOR holding a debris removal and disposal Agreement will serve as a General CONTRACTOR for the purpose of debris removal and disposal operations and will be able to use his/her own and subcontractor resources to meet the obligations of the Agreement. It is anticipated, but not required, that the CONTRACTOR will use both local and non-local subcontractors.

C. When a major disaster occurs or is imminent, the AUTHORITY intends to contact the highest

two (2) or three (3) ranked CONTRACTORS holding debris removal and disposal Agreements to advise them of the AUTHORITY'S intent to activate the Agreement(s). Debris removal will generally be limited to debris in, upon, or brought to county residential private and public streets and roads, rights-of-way, municipal properties and facilities, and other public sites (this includes debris from customers assessed for residential solid waste and recycling collection services by the AUTHORITY). The CONTRACTOR will be responsible for determining the method and manner of debris removal and lawful disposal operations. Disposal of debris will be at AUTHORITY approved TDMS or landfill sites. The CONTRACTOR will be responsible for the lawful disposal of all debris and debris-reduction by-products generated at all TDMS.

D. When a major disaster occurs or is imminent, the AUTHORITY will initially send out an Alert to the selected CONTRACTOR(S). This Alert will serve to activate the lines of communication between the CONTRACTOR representatives and the AUTHORITY. Subsequently, the AUTHORITY will issue the first Task Order which will authorize the CONTRACTOR to send an Operations Manager to the AUTHORITY within 24 hours of receiving such Task Order, to begin planning for the operations and mobilizing the personnel and equipment as necessary to perform the stipulated work. This first Task Order will also direct the CONTRACTOR to execute the required Performance and Payment Bond. The CONTRACTOR should anticipate receiving this first Task Order 24 to 72 hours before projected landfall of a hurricane or major flood. Depending on the nature of the storm and circumstances, the AUTHORITY may activate more than one (1) CONTRACTOR. CONTRACTOR(S) will generally be activated in order of final ranking.

E. Specific task orders will be issued to select CONTRACTORS based on the best interest of Palm Beach County. The AUTHORITY reserves the right to assign work or task orders to various CONTRACTORS based on capability. The AUTHORITY does not guarantee a cradle to grave pricing arrangement but reserves the right to pick and choose CONTRACTORS based on ranking.

F. The general concept of debris removal operations includes multiple, scheduled passes of each site, location, or right-of-way. This will allow residents to return to their properties and bring debris to the private and public right-of-way as recovery progresses. The AUTHORITY will prescribe the specific schedule to be used after ascertaining the scope and nature of the disaster's impacts.

G. The AUTHORITY will make every effort to identify strategically located public and private TDMS throughout the county prior to a natural disaster. Depending upon the severity of the natural disaster, additional public and private TDMS will be identified as needed.

H. The CONTRACTOR will operate the public and private TDMS and only CONTRACTOR vehicles and others specifically authorized by the AUTHORITY will be allowed to use the sites. Only one (1) level of subcontractor will be allowed to operate the sites. There will be no multi-tiered subcontractors (sub of a sub) allowed to operate TDMS. The CONTRACTOR is responsible for all activity at TDMS operated by their subcontractor and must have an employee on site at all times to oversee daily operations. **The locations of both publicly and privately owned sites currently under consideration are shown on Attachment B.** Additional public and privately owned TDMS may become available as plans develop. The availability of both private and public TDMS may change during the term of the Agreement.

I. The AUTHORITY may also establish designated homeowner drop-off sites on a public right-a-way (PROW) for communities. The CONTRACTOR will be responsible for removing all eligible debris from those approved designated locations at the direction of the Emergency Management Coordinator or designee.

J. Curbside segregation of debris and disaster-generated or related wastes will be an element of the AUTHORITY'S disaster recovery program. The debris removal and disposal CONTRACTOR will be required to aid in the segregation and waste stream management processes. Any Household Hazardous Waste (HHW) encountered by the debris removal CONTRACTOR is to be set aside. HHW disposal will be the responsibility of the resident. The AUTHORITY will designate HHW drop-off locations.

K. The following items are considered HHW for the purpose of this Agreement:

1. Used Oil
2. Batteries
3. Paint
4. Aerosol spray cans
5. Pesticides
6. Antifreeze
7. Fluorescent light bulbs
8. Propane tanks (household size)

L. The CONTRACTOR will setup a lined containment area and separate any HHW inadvertently delivered to a TDMS.

M. Commercial and industrial hazardous waste such as chemicals, gas containers, transformers, and any other form of hazardous or toxic matter will be set aside for collection and disposal by a Hazardous Materials Removal and Disposal Contractor who will be selected by the AUTHORITY.

N. Putrescible residential garbage will be collected by AUTHORITY franchise waste haulers and is not to be collected or transported by CONTRACTOR forces. The AUTHORITY may enter into a separate emergency debris removal agreements with each franchise hauler to operate their dedicated self-loading collection equipment within their Service Area for FEMA eligible storm debris removal.

5. SCOPE OF WORK/OVERVIEW:

This section is divided into three (3) subsections:

5.1 **Debris Removal and Disposal Operations** from residential public and private streets, roads and rights-of-way and delivered to a TDMS designated by the Authority.

5.2 **TDMS Operations** which includes daily operations as well as reclamation of the site to its pre-storm condition or as directed by the AUTHORITY Emergency Management Coordinator

5.3 **Processing, Loading and Hauling Material** from TDMS to final destination.

A. Specific work authorizations by the AUTHORITY will be through written Task Orders. Task Orders will define the job to be accomplished, location of job, timeframe for completion, rates to be used, etc. Any job with requirements or rates not covered by this Proposal will be negotiated. The AUTHORITY reserves the right to extend operations on a weekly basis. Task Orders will be executed bilaterally. Performance will be by the metrics established in the Task Order(s). After 1/3 and again after 2/3 of the stipulated number of days of work in the Task Order have elapsed, the CONTRACTOR(S) shall provide written progress report to the AUTHORITY for review and acceptance. The AUTHORITY shall have the right to correct for CONTRACTOR'S default or underperformance by any means it deems in its best interest at the CONTRACTOR'S expense.

B. The CONTRACTOR shall commence mobilization immediately upon receipt of the mobilization Task Order meeting the following progress patterns: 48 hours- collection activity within assigned Collection Service Area. Within ten (10) calendar days CONTRACTOR shall have 100% of all necessary equipment operating within all Collection Service Areas. This represents a minimum response schedule and does not restrict an earlier response. Subsequently, the AUTHORITY may issue additional Task Orders to define more precisely the work to be accomplished or to authorize additional work. The CONTRACTOR shall perform in accordance with each Task Order in all designated Collection Service Areas established by the AUTHORITY. Each Task Order will be uniquely and sequentially numbered.

C. The CONTRACTOR is authorized to collect debris during daylight hours, seven (7) days per week. Any deviations from this schedule will require AUTHORITY approval.

D. The CONTRACTOR must be duly licensed to perform the work in accordance with the State of Florida statutory requirements. The CONTRACTOR shall obtain all permits necessary to complete the work. The CONTRACTOR shall be responsible for determining what permits are necessary to perform under the Agreement. Copies of all permits shall be submitted to the AUTHORITY's Director, Customer Information Services prior to issuance of the first Task Order.

E. The quantity of work required to complete the Agreement resulted from this RFP is estimated. The actual effort required may be more or less than the estimated amount shown in the Proposal Form 3 – Price Proposal. Payment will be made at the unit rates proposed. The output will be verified by the AUTHORITY's Director, Customer Services in the daily operational report. Should hourly rates be used to pay for certain equipment other than preventative maintenance, not in excess of fifteen (15) minutes in a normal workday, will be paid at the regular hourly rate. Preventative maintenance or down time resulting from equipment failure, routine maintenance and fueling that exceeds fifteen (15) minutes will be considered unacceptable work and non-payment of that time will be rounded off to the half hour of all hours where delays occur. Preventative maintenance is defined as the usual field maintenance to keep equipment in operating condition without the use of extensive shop equipment. Fueling of equipment will be considered as part of preventative maintenance.

F. The CONTRACTOR shall be responsible for correcting any notices of violations issued as a result of the CONTRACTOR'S or any subcontractor's actions or operations during the performance of this Agreement. Corrections for any such violations shall be at no

additional cost to the AUTHORITY.

G. The CONTRACTOR shall conduct the work so as not to interfere with the disaster response and recovery activities of federal, state or local governments or agencies, or of any public utilities or other private contractor.

H. The CONTRACTOR shall provide contact information for all key personnel to the AUTHORITY that shall include name, phone number, cellular phone number and email address. The CONTRACTOR and its agents shall respond in a timely manner to all AUTHORITY inquiries at all times.

6. DEBRIS REMOVAL AND DISPOSAL OPERATIONS

6.1 General:

A. The purpose of this section is to define the requirements for debris removal and disposal operations after any catastrophic disaster within Palm Beach County. The AUTHORITY may designate zones for collection and disposal locations for debris collected. CONTRACTORS will be tasked with a service area(s) for this specific work immediately after the activation of the Agreement.

B. For work performed on a Time and Materials basis, all hourly equipment rates shall include the cost of the maintenance, fuel, repairs, overhead, profit, insurance, and all other costs associated with the equipment including labor and operator.

6.2 Services:

A. The CONTRACTOR shall provide equipment, operators, and laborers for debris removal operations. The CONTRACTOR shall provide all labor and materials necessary to fully operate and maintain (including fuel, oil, grease, and repairs) all equipment under this Agreement.

B. All rates are to include the cost of protective clothing (to include hardhats and steel-toed boots), fringe benefits, hand tools, supervision, transportation, lodging, meals, and all other costs.

C. The work shall consist of clearing and removing disaster generated debris as directed by the AUTHORITY Emergency Management Coordinator. CONTRACTOR shall provide collection equipment the day following a natural disaster or as directed by the AUTHORITY and shall provide equipment sufficient to collect a minimum of 50,000 cubic yards of debris per day within ten (10) calendar days of collection commencement (Past AUTHORITY natural disaster cleanup records show that ten (10) days' following disaster, 95,000-126,000 cubic yards of debris collected per day). Failure to provide sufficient equipment necessary to collect required amount may result in the AUTHORITY entering into a separate agreement with another contractor for collection services.

6.2.1 Removal of Hazardous Leaning Trees and Hanging Limbs

a) Under this contract, work shall consist of all labor, equipment, fuel, and

miscellaneous costs necessary to remove all hazardous trees twelve inches (12") or greater in diameter, measured three feet (3') from the base of the tree or chest height and hanging limbs two inches (2") or greater in diameter existing in private and public right-of-way. Further, debris generated from the removal of hazardous trees and hanging limbs two inches (2") or greater existing in private and public right-of-way will be placed at the public right-of-way for removal as vegetative debris. Hazardous leaning trees less than twelve inches (12") in diameter, measured three feet (3') from the base of the tree or at chest height, will be flush cut, and placed on the public right-of-way to be removed as vegetative debris. The AUTHORITY will not compensate the CONTRACTOR for leaning trees less than twelve inches (12") in diameter on a unit rate basis.

b) Removal and transportation of hazardous trees twelve inches (12") or greater in diameter and hanging limbs two inches (2") or greater in diameter existing in private and public right-of-way will be performed as identified by the AUTHORITY. All disaster specific eligibility guidelines regarding size and diameter of leaning trees will be communicated to the CONTRACTOR, in writing, by the AUTHORITY. In order for leaning or hazardous trees to be removed and eligible for reimbursement, the tree must satisfy a minimum of one (1) of the following requirements:

   i) The tree is leaning in excess of 30° degrees in a direction that poses an immediate threat to public health, welfare, and safety.
   ii) The tree is dead, twisted, or mangled as a direct result of the storm and a certified arborist can attest to the fact that the tree will die and potentially create a falling hazard to the public.

6.2.2 Removal of Hazardous Stumps

a) Under this contract, work shall consist of all labor, equipment, fuel, and miscellaneous costs necessary to remove all hazardous uprooted stumps 24 inches or greater in diameter, measured 24 inches from the base of the tree existing in private and public right-of-way. Further, debris generated from the removal of uprooted stumps existing in private and public right-of-way will be placed at the public right-of-way for removal as vegetative debris. Stumps measured 24 inches from the base of the tree and less than 24 inches in diameter will be considered normal vegetative debris and removed in accordance with 3.1.2. The AUTHORITY will not compensate hazardous stumps less than 24 inches in diameter on a unit rate basis and instead will be considered normal vegetative debris. The diameter of stumps less than 24 inches will be converted into a cubic yardage volume based on the published FEMA stump conversion table (In accordance with current FEMA public assistance guidelines) and removed under the terms and conditions of 2.6.2.

b) Removal and transportation of hazardous uprooted stumps existing in the private and public right-of-way and private property will be performed as identified by the AUTHORITY. All disaster specific eligibility guidelines regarding size and diameter of hazardous stumps will be communicated to the CONTRACTOR, in writing, by the AUTHORITY. In order for hazardous stumps

to be removed and eligible for reimbursement, the stump must satisfy the following requirement:

(i) Over 50% of the tree crown is damaged or broken and heartwood is exposed.
(ii) Tree stumps that are not attached to the ground will be considered normal vegetative debris and subject to removal under the terms and conditions of 2.1. The cubic yard volume of the unattached stump will be based off of the diameter conversion using the published FEMA stump conversion table (In accordance with current FEMA public assistance guidelines).

The AUTHORITY or its representative will measure and certify all stumps before removal.

6.2.3 Collection of Storm Generated Residential Vegetation and Construction and Demolition Debris:

a) It is the AUTHORITY'S goal to ensure that Vegetation and Construction/Demolition debris remain separate task orders for the collection of Vegetation and Construction loads. Mixing of loads by the CONTRACTOR at the road right of way will not be tolerated.

Work may include:

(i) First pass to clear debris from emergency evacuation routes, access roads to critical facilities and all primary roadways.
(ii) Clearing debris from residential private and public road right of ways.
(iii) Loading the debris.
(iv) Hauling the debris to an approved AUTHORITY TDMS or an authorized private construction demolition debris recycling facility or landfill.
(v) Dumping the debris at the TDMS or direct haul to an Authority permitted approved private Construction and Demolition Debris (C&D) recycling facility or Authority authorized landfill.

b) Debris delivered to a TDMS, private C&D recycling facility or authorized landfill will be paid based on the per cubic yard price according to the Proposal Form 3 – Price Proposal.

6.2.4 Hourly Rate Clearing:

a) From 0-70 hours following a disaster CONTRACTOR, as designated by the AUTHORITY, shall provide the clearing services on an hourly rate that shall include the following:

(i) Clear debris from emergency evacuation routes, access roads to critical facilities, and primary roadways.
(ii) Perform emergency removal of debris if needed for life-saving measures.
(iii) Conduct daily briefings with debris managers and other officials to update progress and discuss issues.
(iv) Develop a traffic control plan along potential haul routes and at debris

management and disposal sites.

b) The CONTRACTOR shall not move from one designated Collection Zone to another area without prior approval from the AUTHORITY's Director, Customer Information Services or designee. CONTRACTORS and/or subcontractors that move to a designated Collection Service Area without prior AUTHORITY approval may be terminated immediately. The AUTHORITY reserves the right to relocate CONTRACTOR to other Collection Service Areas based on need and ability to perform required work at an acceptable level. The AUTHORITY reserves the right to immediately terminate CONTRACTOR and any subcontractor who fails to provide service in strict accordance with guidelines set forth by FEMA and the AUTHORITY.

c) The AUTHORITY or designee shall forward all claims of damage to the CONTRACTOR daily. CONTRACTOR shall provide all contact information, including name, phone number, cellular phone number, fax number and email address, for personnel responsible for resolving all claims of damage. CONTRACTOR must respond to all claims of damage within 24 hours and resolve within ten (10) calendar days. Mailboxes must be repaired or replaced within two (2) calendar days. CONTRACTOR is responsible for all damage caused by his crew and/or subcontractors in the performance of debris removal.

d) In the event the CONTRACTOR fails to repair damages as a result of the Contractor's equipment failure or negligence within the time provided in this Agreement, the AUTHORITY or designee may arrange for the repairs and assess the CONTRACTOR for the cost of the repairs and any applicable administrative charges. Any disputes as to damage responsibility will be presented to the Director, Customer Information Services or designee for review. The decision of the Director, Customer Information Services or designee will be final.

6.3 Equipment:

A. All trucks and equipment must be in compliance with all applicable federal, state, and local rules and regulations. Trucks used to haul debris must be capable of rapidly dumping their load without the assistance of other equipment, be equipped with a tailgate that will effectively contain the debris during transport that will permit the trucks to be filled to capacity. Cyclone fence may be used as temporary tailgates if they comply with the following specifications:

1. Fencing must be permanently attached to one side of the truck bed.
2. After loading, the fencing must be tied to the other side of the truck bed at two places with heavy gauge wire.
3. Fencing must extend to the bottom of the bed.
4. After loading, bottom of fencing shall be tight against the bed of the truck and secured at a minimum of two locations.
5. Solid iron metal bars must be secured to both sides of the fencing.
6. There shall be no hand loaded equipment allowed.

B. The AUTHORITY or designee shall complete certifications indicating the type of vehicle, make and model, license plate number, equipment number, and measured maximum volume, in cubic yards, of the load bed of each piece of equipment utilized to haul debris. The measured volume of each piece of equipment shall be calculated from actual internal physical measurement performed and certified by the CONTRACTOR. Maximum volumes may be rounded up to the nearest cubic yard. The reported measured maximum volume of any load bed shall be the same as shown on the placards affixed to each piece of equipment. The AUTHORITY reserves the right to re-measure trucks and trailers at any time to verify reported capacity. If a truck and/or trailer are re-measured and the yardage capacity is determined to be lower, the lower yardage volume will be retroactive to the initial load and total volume adjusted accordingly.

C. All trucks and trailers utilized in hauling debris shall be equipped with a tailgate that will permit the vehicle to be loaded to capacity and effectively contain the debris on the vehicle while hauling. If installed, all sideboard extensions must remain in place throughout the operation, or the vehicle must be re-measured and remarked. All extensions to the bed are subject to acceptance or rejection at the sole discretion of the AUTHORITY or designee.

D. Trucks or equipment designated for use under this Agreement shall not be used for any other work during working hours. The CONTRACTOR shall not solicit work from private citizens or others to be performed in the designated Collection Service Area during the period of this Agreement. Under no circumstance will the CONTRACTOR mix debris hauled for others with debris hauled under this Agreement. Failure to comply will result in no payment to CONTRACTOR and the operator and vehicle will be declared ineligible to provide any additional emergency debris collection services. Any and all unapproved changes to placard will result in no payment to CONTRACTOR and the operator and vehicle will be declared ineligible to perform any additional emergency debris collection services.

6.4 Securing Debris

The CONTRACTOR shall be responsible for properly and adequately securing debris on each piece of equipment utilized to haul debris. Prior to leaving the loading site, the CONTRACTOR shall ensure that each load is secure and trimmed so that no debris extends horizontally beyond the bed of the equipment in any direction. All loose debris shall be reasonably compacted during loading and secured during transport. Tarps or other coverings shall be provided by the CONTRACTOR to prevent materials from falling or being blown from the bed. Loads not properly tarped or otherwise covered will not be allowed to dispose at any AUTHORITY approved TDMS which may result in non-payment to CONTRACTOR.

6.5 Equipment Signage

Prior to commencing operations, the AUTHORITY or designee shall affix to each piece of equipment, signs or markings indicating the Owner Operator's name and a unique equipment identification number. One sign shall be placed on each side of the equipment. For those trucks, trailers and other equipment intended to haul debris, the maximum volume, in cubic yards, of the load bed shall also be shown. Each operator shall keep AUTHORITY certification with them at all times. Placards must remain on both sides of equipment.

6.6 Other Considerations

A. The CONTRACTOR shall assign and provide an Operations Manager (OM) to the AUTHORITY TDMS to serve as the principal liaison between the AUTHORITY Director, Customer Services or designee and the CONTRACTOR'S forces. The assigned OM must be knowledgeable of all facets of the CONTRACTOR'S operations and have authority in writing to commit the CONTRACTOR. The OM shall be on call 24 hours per day, seven (7) days per week and shall have electronic linkage capability for transmitting and receiving relevant contractual information and make arrangements for onsite accommodations. This linkage shall provide immediate contact via cell phone, Fax machine, and have Internet capabilities. The OM will participate in daily meetings and disaster exercises, functioning as a source to provide essential element information. The OM will report to the AUTHORITY Director, Customer Services or designee. This position will not require constant presence; rather the OM will be required to be physically capable of responding to the AUTHORITY Emergency Management Coordinator within 30 minutes of notification.

B. The CONTRACTOR shall be responsible for control of pedestrian and vehicular traffic in the work area. At a minimum, one flag person should be posted at each approach to the work area.

C. The CONTRACTOR shall supervise and direct the work, using skilled labor and proper equipment for all tasks. Safety of the CONTRACTOR'S personnel and equipment is the responsibility of the CONTRACTOR. Additionally, the CONTRACTOR shall pay for all materials, personnel, taxes, and fees necessary to perform under the terms of this contract.

D. Payment for debris hauled will be based on the quantity of debris hauled in cubic yards. Debris hauled to a TDMS will require a validated load ticket. Drivers will be given an electronic load tickets at the loading site by an AUTHORITY loading site monitor. The quantity of debris hauled will be estimated in cubic yards at the TDMS by an AUTHORITY TDMS monitor. The estimated quantity will be recorded on the electronic load ticket. The AUTHORITY TDMS monitor will retain one copy of the paper load ticket and the driver will retain the remaining copies of the load ticket. Debris being hauled to a permanent landfill will be paid based on cubic yards recorded on an approved electronic or paper load ticket. Payment will be made against the CONTRACTOR'S invoice once site monitor and CONTRACTOR load tickets and/or scale tickets match. Load tickets not properly completed and signed will not be paid.

7. TEMPORARY DEBRIS MANAGEMENT SITES (TDMS) OPERATIONS

7.1 General

A. The purpose of this section is to define the requirements for TDMS Operations after any catastrophic disaster within Palm Beach County.

B. The CONTRACTOR shall use only TDMS designated by the AUTHORITY Emergency Management Coordinator.

C. The TDMS foreman shall direct all vehicular traffic and load drop-off operations. Different types of debris shall be kept in separate piles at the TDMS. At a minimum, one flag person shall be posted at each TDMS for traffic control and to direct unmixed loads to proper location (by debris type) to be offloaded. CONTRACTOR shall be responsible for sorting and proper placement of all loads not dumped in appropriate location which results in mixing the once separated debris at no charge to the AUTHORITY.

D. The CONTRACTOR shall begin grinding vegetative debris within five (5) calendar days of TDMS opening date and removing mulch/wood chips within ten (10) calendar days of site opening date. It is very important your plan provides specific information for the final disposal destination location of the mulch / wood chips removed from the public or private TDMS. The CONTRACTOR shall begin removal of Construction and Demolition/mixed debris from TDMS to an approved final destination within five (5) days of site opening date.

7.2 TDMS Services

7.2.1 Site Setup/Preparation and Site Closeout/Restoration Site setup/preparation and site closeout/restoration shall be compensated on a time and materials basis in accordance with the hourly rates provided in the Proposal Form 3 – Price Proposal Site set-up/preparation/closeout/restoration includes: clearing, stripping, hauling, fill placement, constructing/deconstructing processing pads, limerock or crushed concrete access roads, seeding, and any other similar activity necessary to make the site usable for its intended purposes and to return the site to its original condition. Do not include any materials in calculating the hourly rates in the Proposal Form 3 - Price Proposal. Important- Phase I TDMS Reclamation is included in the 2.0 cubic yard price. Phase I Reclamation requires the contractor to remove all debris from the TDMS including small particles mixed with soil and grading the entire area. The only site closeout cost will be removal of road base material and seeding as approved by the Authority.

7.2.2 TDMS Operations and Material Processing

a. TDMS operations and material processing shall be compensated in accordance with the unit prices provided in the Proposal Form 3 - Price Proposal. The CONTRACTOR shall provide equipment, operators, and laborers for TDMS operations as specified by Task Order. Unit prices provided in the Proposal Form 3 - Price Proposal, shall include all labor and materials necessary to fully operate and maintain (including fuel, oil, grease, repairs, operator, mobilization, demobilization, overhead, profit, lodging and insurance) all equipment under this Agreement. Each Inspection Tower shall be equipped with two (2) portable toilets. Toilets shall be provided immediately upon completion of tower assembly. CONTRACTOR shall provide a water truck for the purpose of applying to site surface to minimize dust. The AUTHORITY shall provide a front-load garbage container and collection service of the container at each TDMS. CONTRACTOR shall be responsible for cleaning up all trash and litter generated on the site from daily operations and depositing into the container for collection. The entrance roadway and surrounding area within ½ mile of the site's entrance shall be cleaned daily by the CONTRACTOR. All pre-storm

identified sites shall be opened by the CONTRACTOR within three (3) calendar days after receiving approval from the AUTHORITY to operate the TDMS. Failure to open sites with proper equipment and necessary personnel will result in liquidated damages of $10,000 per day. All rates shall include the cost of protective clothing (to include hardhats and steel-toed boots), fringe benefits, hand tools, supervision, transportation, lodging, meals, and any other costs. The work shall consist of managing the operations of a TDMS and performing debris reduction by air curtain incineration and/or grinding of storm generated debris as directed by the AUTHORITY Emergency Management Coordinator

b. The AUTHORITY plans to use two types of TDMS.

   1. Vegetative TDMS will be devoted to the reduction of clean woody debris by either burning or grinding. The AUTHORITY expects the material to be recycled and or beneficially re-used if processed by grinding. It is important to provide a detailed plan on how this material will be recycled or beneficially reused after grinding / reduction.

   2. Depending upon the size and type of devastation the AUTHORITY may require a separate Construction & Demolition (C&D) staging area, mixed debris staging area and a separate Household Hazardous Waste staging area. The AUTHORITY requests that PROPOSER implements recycling and or reduction programs to minimize the quantity of construction debris material to be land filled.

c. Material coming into the Vegetative or C&D TDMS will be measured and paid for by the cubic yard according to the Proposal Form 3 – Price Proposal. Material removed and transported from a C&D TDMS will be measured and paid by the cubic yard according to the Proposal Form 3 – Price Proposal.

d. Locations of all TDMS will be approved by the AUTHORITY. The AUTHORITY Emergency Management Coordinator must approve site improvements before work begins and any costs, other than those in the Proposal Form 3 – Price Proposal, that might have been negotiated under a Task Order shall be documented for payment.

e. Material processed at a TDMS by either grinding or burning will be measured using cubic yards from incoming load tickets. Material entering a TDMS will be deposited in manageable piles.

7.3 Reporting

The CONTRACTOR shall submit a report to the AUTHORITY Emergency Management Coordinator or designee by close of business each day of the term of the Task Order. Each report shall contain, at a minimum, the following information:

1. Contractor's Name
2. Contract Number

3. Daily and cumulative hours for each piece of equipment, *if appropriate*
4. Daily and cumulative hours for personnel, by position, *if appropriate*
5. Volumes of debris handled

Failure to provide audit quality information by 5:00 p.m. of the following day of operation will subject CONTRACTOR to non-payment in each instance at the sole discretion of the AUTHORITY.

7.4 Other Considerations

A. The CONTRACTOR shall supervise and direct the work, using skilled labor and proper equipment for all tasks. Safety of the Contractor's personnel and equipment is the responsibility of the CONTRACTOR. Additionally, the CONTRACTOR shall pay for all materials, personnel, taxes, and fees necessary to perform under the terms of this contract.

B. The CONTRACTOR shall be responsible for control of pedestrian and vehicular traffic in the work area. In the event a TDMS must be closed due to CONTRACTOR equipment or operational failures, CONTRACTOR shall be liable for liquidated damages in the amount of $25,000.00 per day for every day the site has to remain closed.

7.5 Debris Clearance (for access) from Right-of-Ways and Public Property

A. The AUTHORITY provides support to Palm Beach County Government for Debris Management, including the clearance (moving debris from the middle of the road, etc.) of debris from right-of- ways and public property. Palm Beach County intends to perform debris clearance for access with its own forces or under existing contractual Agreements between the County and local firms. However, in a significant disaster, these resources may be insufficient to perform the clearance activities in a timely manner.

B. This debris clearance is to be considered supplemental and optional service. It is anticipated that debris clearance activities would be conducted, if needed, on a time and material basis using the rates in the Proposal Form 3 – Price Proposal.

8. PROCESSING, LOADING AND HAULING MATERIAL:

CONTRACTOR shall provide all necessary labor, material and equipment to process, load and haul wood chips from TDMS in Palm Beach County to final destination for disposal. CONTRACTOR shall provide all necessary labor, material and equipment to load and haul construction and demolition debris and/or mixed debris from TDMS as directed by the AUTHORITY. The AUTHORITY reserves the right to contract with other firms to process, load and haul wood chips and construction and/or mixed debris to a final destination as may best meet the needs of the AUTHORITY. All wood chips, construction and/or mixed debris shall be disposed of in accordance with all Local, State of Florida and Federal guidelines.
CONTRACTOR will provide detailed listing to the AUTHORITY of the following:

1. Quantity (loads and cubic yards)
2. Owner information
3. Site where mulch / reduced yard waste material generated at TDMS is disposed, to include

address/GPS location.

4. AUTHORITY will determine final private or public Construction/Demolition debris disposal/recycling facility.

9. MISCELLANEOUS REQUIREMENTS

9.1 TDMS Foreman

A. The TDMS foreman must be an employee of the CONTRACTOR and is responsible for management of all operations of the site to include, traffic control, dumping operations, segregation of debris, burning, grinding, and safety.

B. The TDMS foreman will be responsible for monitoring and documenting equipment and labor time and providing the daily operational report to the AUTHORITY Director, Customer Services or designee.

9.2 TDMS Night Foreman

A. The TDMS night foreman must be an employee of the CONTRACTOR and is responsible for managing all night operations approved by the AUTHORITY.

B. The TDMS night foreman will be responsible for monitoring and documenting equipment and labor time and providing the daily operational report to the AUTHORITY Director, Customer Information Services or designee.

9.3 TDMS Management Plan

A. Once the TDMS is identified by the AUTHORITY, the CONTRACTOR will provide a Site Management Plan.

B. Three (3) copies of the plan are required. The plan shall be drawn to a scale of 1" = 50' and address the following functions:

1. Access to site
2. Site preparation -clearing, erosion control, and grading
3. Traffic control procedures
4. Safety
5. Segregation of debris
6. Location of ash disposal area, hazardous material containment area, CONTRACTOR work area, and inspection tower
7. Location of incineration operations, grinding operation (if required). Burning operations require a 100-foot clearance from the stockpile and a 1000-foot clearance from structures.
8. Specific plan including and location for the final disposal destination of the mulch/wood chips generated at the public or private TDMS.

9.4 Inspection Tower

The CONTRACTOR shall construct an inspection tower at each TDMS within three (3) calendar days of natural disaster. The tower shall be constructed using pressure treated

wood or steel scaffold. The floor elevation of the tower shall be 10-feet above the existing ground elevation. The floor area shall be a minimum 8' by 8', constructed of 2"x 8" joists, 16" O.C. with 3/4" plywood supported by a minimum of four 6" x 6" posts. A 4-foot high wall constructed of 2" x 4" studs and ½" plywood shall protect the perimeter of the floor area. The floor area shall be covered with a roof. The roof shall provide a minimum of 6'-6" of headroom below the support beams. Steps with a handrail shall provide access to the tower. Inspection towers must provide a dry area for employees and meet all FEMA and OSHA requirements.

9.5 Grinding Operation

The CONTRACTOR shall have grinder(s) on site and in operation within five (5) calendar days following a natural disaster. Failure to provide sufficient grinding capacity to accommodate expected incoming volumes and allow site to operate in an efficient manner within five (5) calendar days shall result in liquidated damages of $10,000 per day. There shall be no period longer than 24 hours in which grinding activity may stop due to equipment or operational failure. Failure to provide back-up equipment within 24 hours shall result in liquidated damages of $2,000 per hour per approved hours of grinding operation per day until grinding activity resumes.

9.6 Household Hazardous Waste Containment Area

The CONTRACTOR shall construct a hazardous material containment area at each TDMS. The area shall be 30' x 30'. The perimeter shall be lined with hay bales and staked in place. The area shall be lined with a heavy gage plastic to provide a waterproof barrier. Additional plastic sufficient to cover the area is required to prevent rain from entering the containment area. Site run-off must be redirected from the containment area by site grading.

10. PERFORMANCE OF CONTRACTOR

A. It is the intent of this Agreement to ensure that the CONTRACTOR provides a timely quality level of services. To this end, all complaints received by the Emergency Management Coordinator or designee and reported to the CONTRACTOR shall be promptly resolved pursuant to the provisions of this Agreement.

B. The Emergency Management Coordinator or designee may levy administrative charges for the following infractions:

1. Failure to open pre-storm identified sites within three (3) calendar days of after being tasked by the AUTHORITY liquidated damages of $10,000 per day for each day not opened.
2. Closure of TDMS due to CONTRACTOR equipment or operational failures liquidated damages of $25,000 per day, for each day site must remain closed.

C. Failure to provide back-up grinder(s) within 24 hours of equipment breakdown liquidated damages of $2,000 per hour per approved grinding hours of operation per day.

D. CONTRACTOR may also be subject to non-payment and liquidated damages of $200 for each occurrence of the following infractions:

1. Failure to provide audit quality information by 5:00 p.m. of the following day of operation.
2. Loads not properly tarped or otherwise covered.
3. Mixing debris hauled from other sources with debris hauled under this Agreement.
4. Mixing vegetation debris with C & D material.

E. CONTRACTOR may be immediately terminated and not paid for the following:

1. Collection of any non-eligible, non-AUTHORITY approved stumps or debris.
2. Moving to another designated Collection Service Area without prior AUTHORITY approval.
3. Failure to provide service in accordance with guidelines set forth by FEMA and the AUTHORITY.
4. Soliciting work from private citizens or others to be performed in the designated Collection Service Area during the period of this Agreement.
5. Alteration of placards placed on certified trucks and/or trailers.

Any disputes regarding Performance of Contractor will be presented to the Emergency Management Coordinator or designee for review. The Emergency Management Coordinator or designee shall complete review and make determination within three (3) calendar days. Decisions of the Emergency Management Coordinator or designee shall be final.

FEE SCHEDULE

PROPOSAL FORM 3 – PRICE PROPOSAL

PART A – VOLUME BASED PRICING FOR 3,000,000 CUBIC YARD (CY) DEBRIS DISASTER

ITEM/DESCRIPTION	ESTIMATED QUANTITY	UNIT	PRICE PER CY	EXTENSION
1.0 Public Property and Right of Way Collection, Loading and Hauling to a designated TDMS.				
A. Vegetation	2,500,000	CY	$8.25	$20,625,000.00
B. Construction Debris / Mixed Debris	500,000	CY	$8.25	$4,125,000.00
2.0 TDMS operation to include placement of monitoring towers, portable toilets, keeping on-site and adjacent roads area clean of trash and garbage, debris acceptance, pile management, and Phase I Reclamation.	3,000,000	CY	$0.25	$750,000.00
3.0 Processing of debris through grinding and/or chipping. Will honor for C&D reduction via compaction.	2,500,000	CY	$3.40	$8,500,000.00
4.0 Loading, hauling and disposing wood chips to final destination. ***(This rate includes disposal cost)***	1,000,000	CY	$8.75	$8,750,000.00
5.0 Loading and hauling of construction debris and/or mixed debris from TDMS to a permitted C&D recycling facility or any other designated Disposal Facility. ***(This rate shall not include disposal cost). Based on miles from TDMS to final destination– 1 way.***				
A. 0 ≤ 20 miles	500,000	CY	$4.40	
B. > 20 ≤ 50 miles	500,000	CY	$5.50	
C. > 50 ≤ 100 miles	500,000	CY	$7.80	
AVERAGE: (Item 6.0 A-C)			$5.90	
AVERAGE: (Item 5.0 A-C) **X 500,000** CY =				$ 2,950,000.00
TOTAL PROPOSAL PRICE: (Items 1.0 - 5.0)				$ 45,700,000.00

PROPOSER MUST PROVIDE PRICE FOR ALL LINE ITEMS 1 THRU 6. FAILURE TO DO SO MAY RENDER YOUR PROPOSAL TO BE DEEMED NON-RESPONSIVE.

Unit Prices, unless otherwise indicated, shall include all labor (operators, laborers, supervisors) and materials including but not limited to: supplies, equipment maintenance, repairs, repair parts, fuels, lubricants, cellular phones, transportation, and housing, if required, necessary to accomplish the project. The quantities and distributions are estimated for the purpose of making an award. Locations of sites, debris quantities, destinations, material densities, etc. may differ substantially in an actual disaster.

Assumptions: 3,000,000 cubic yards of debris consisting of 2,500,000 cubic yards of vegetation debris and 500,000 cubic yards of mixed debris.

PROPOSAL FORM 3 – PRICE PROPOSAL

PART B – HOURLY RATES

TDMS SET-UP AND CLOSURE AND DEBRIS CLEARANCE FOR ACCESS - OPTIONAL USE BY COUNTY AND OTHER GOVERNMENTAL ENTITIES			
EQUIPMENT AND LABOR RATES			
EQUIPMENT TYPE	HOURLY EQUIPMENT RATE	HOURLY LABOR RATE	TOTAL HOURLY RATE
Bobcat Loader	90.00	38.00	128.00
Crew Foreman w/ Cell Phone and Pickup	20.00	48.00	68.00
Dozer, Tracked, D5 or similar	100.00	38.00	138.00
Dozer, Tracked, D6 or similar	110.00	38.00	148.00
Dozer, Tracked, D7 or similar	125.00	38.00	163.00
Dozer, Tracked, D8 or similar	135.00	38.00	173.00
Dump Truck, 18 CY-20 CY	60.00	38.00	98.00
Dump Truck, 21CY-30 CY	70.00	38.00	108.00
Generator and Lighting (5 kW)	35.00	0.00	35.00
Grader w/ 12' Blade	150.00	38.00	188.00
Hydraulic Excavator, 1.5 CY	130.00	38.00	168.00
Hydraulic Excavator, 2.5 CY	140.00	38.00	178.00
Knuckleboom Loader	180.00	38.00	218.00
Laborer w/ Chain Saw	10.00	38.00	48.00
Laborer w/ small tools, traffic control, flag person	0.00	38.00	38.00
Lowboy Trailer w/ Tractor	100.00	38.00	138.00
Operations Manager w/ Cell Phone and Pickup	20.00	60.00	80.00
Pickup Truck, .5 Ton	20.00	0.00	20.00
Soil Compactor 81 HP+	65.00	38.00	103.00
Soil Compactor to 80 HP	55.00	38.00	93.00
Soil Compactor, Towed Unit	45.00	38.00	83.00
Truck, Flatbed	50.00	38.00	88.00
Tub Grinder, 800 to 1,000 HP	395.00	38.00	433.00
Water Truck	85.00	38.00	123.00
Wheel Loader, 2.5 CY, 950 or similar	120.00	38.00	158.00
Wheel Loader, 3.5-4.0 CY, 966 or similar	130.00	38.00	168.00
Wheel Loader, 4.5 CY, 980 or similar	140.00	38.00	178.00
Wheel Loader-Backhoe, 1.0-1.5 CY	85.00	38.00	123.00
Other – Please List			

Attach additional sheet with equipment type and labor rates, if needed

Push Crew: 1 loader or skidsteer, 2 sawhands, 1 foreman = $345.00 per hour.

PROPOSAL FORM 3 - PRICE PROPOSAL

PART C - UNIT COST SCHEDULE

ITEM	HAZARDOUS STUMP REMOVAL, HAULING, AND DISPOSAL	UNIT	UNIT COST
1.	24-inch diameter to 48.99-inch diameter	Stump	$350
2.	49-inch diameter and greater	Stump	$460
3.	Stump Fill Dirt – Fill dirt for stump holes after removal	CY	$20.00
	HAZARDOUS HANGING LIMBS (HANGERS) To include removal of all hanging limbs. Limbs to be cut and placed on the right of way for collection as vegetative debris.		
4.	2-inch diameter and greater	Tree	$90.00
	HAZARDOUS TREE REMOVAL Trees to be flush cut at ground level and placed on the right of way for removal as vegetative debris.		
5.	6-inch diameter to 11.99-inch diameter	Tree	$55.00
6.	12-inch diameter to 23.99-inch diameter	Tree	$160
7.	24-inch diameter to 35.99-inch diameter	Tree	$290
8.	36-inch diameter to 47.99-inch diameter	Tree	$340
8.	48-inch diameter and greater	Tree	$400

NOTE:
The following is information only and will NOT be considered in the evaluation of this RFP

The AUTHORITY reserves the right to use this contract to handle small quantities of debris removal and as support for our Franchise Contracts as needed. Below is a daily rate to remove debris. The AUTHORITY will pay for the disposal cost. There is no requirement to provide a rate, however if you do, we expect your company to honor this special service and respond within 48 hours at the rate below.

COLLECTION SERVICE ONLY	
EQUIPMENT	DAILY RATE (10 HRS/DAY)
Knuckleboom Loader and Operator	$ 3,400.00

RFP No. 22-201/DL - Rev 41 - January 2022

ATTACHMENT "A"

SOLID WASTE AUTHORITY
OF PALM BEACH COUNTY

7501 North Jog Road
West Palm Beach, Florida 33412
Telephone: 561-640-4000 • Fax: 561-640-3400

TASK ORDER
DISASTER DEBRIS MANAGEMENT

TO_____
Task Order No.

In accordance with _____(Contractor) contract, with the Solid Waste Authority of PBC, Florida, (AUTHORITY) Agreement No._____ for Hurricane/Disaster Debris Removal, Reduction, and Disposal dated _____ the AUTHORITY hereby requests and authorizes the services to be performed on the project as described below:

Project: _____

Specific Work to be performed: _____

Duration of Work (Include Start Date, End Date and Total Calendar Days): _____

Method of Payment: _____

Estimated Cost of this Task Order: $_____

Contractor Signature: _____ Date: _____

AUTHORITY Signature: _____ Date: _____

SWA Use Only

SWA Requestor/Monitor: _____ Date: _____

SWA Dept. Director: _____ Date: _____

Vendor No.: _____ Account No.: _____ Project: _____

Purchasing: _____ Budget: _____ Accounting: _____

ATTACHMENT "B"

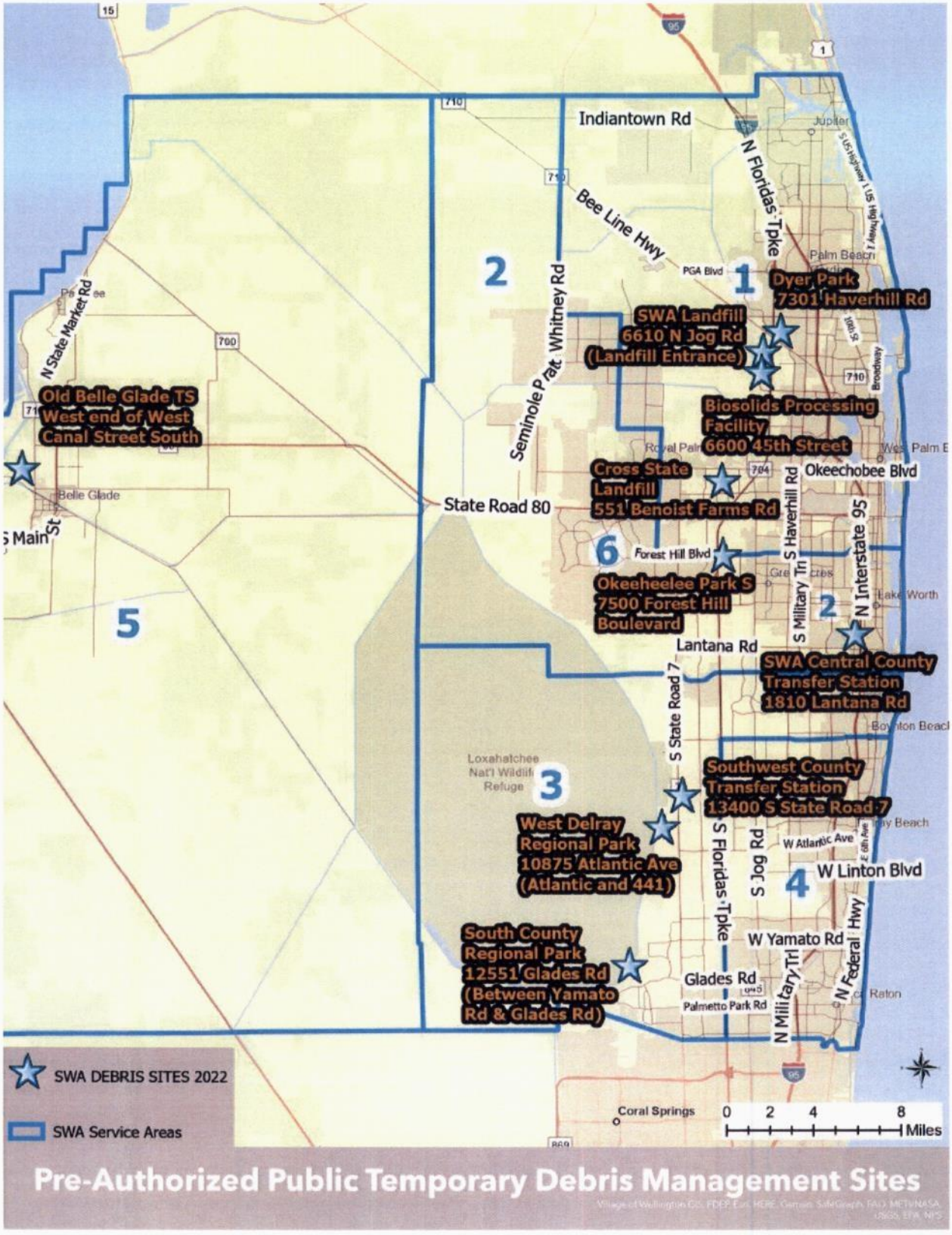

PUBLIC ASSISTANCE PROGRAM AND POLICY GUIDE

The Public Assistance Program and Policy Guide, Version 4, Effective June 1, 2020 (see hyperlink below) is the most recent reference material that will provide additional information:
https://www.fema.gov/sites/default/files/documents/fema_pappg-v4-updated-links_policy_6-1-2020.pdf

PROJECT MANAGEMENT

Project management begins when a disaster occurs and does not end until an applicant has received final payment for the project. Good project management ensures successful recovery from the disaster, expedited payment of funds, and more efficient close-outs of PA Program grants.

Record Keeping

It is critical that the applicant establish and maintain accurate records of events and expenditures related to disaster recovery work. The information required for documentation describes the "who, what, when, where, why, and how much" for each item of disaster recovery work. The applicant should have a financial and record keeping system in place that can be used to track these elements. The importance of maintaining a complete and accurate set of records for each project cannot be over-emphasized. Good documentation facilitates the project formulation, validation, approval, and funding processes.

All of the documentation pertaining to a project should be filed with the corresponding *PW* and maintained by the applicant as the permanent record of the project. These records become the basis for verification of the accuracy of project cost estimates during validation of small projects, reconciliation of costs for large projects, and audits.

Applicants should begin the record keeping process before a disaster is declared by the President. To ensure that work performed both before and after a disaster declaration is well documented, potential applicants should:

- designate a person to coordinate the compilation and filing of records;
- establish a file for each site where work has been or will be performed; and
- maintain accurate disbursement and accounting records to document the work performed and the costs incurred.

The Federal Office of Management and Budget requires grant recipients to maintain financial and program records on file for three years following final payment. Records of grant recipients may be subject to the provisions of the Single Audit Act, as described on page 117 of this guide. Applicants may refer to the Applicant Handbook, FEMA 323, for additional information regarding record-keeping.

ATTACHMENT "D"

MOBILIZATION SCHEDULE

CONTRACTOR shall commence mobilization of equipment, operators, and laborers immediately upon receipt of a Mobilization Task Order to meet the progress pattern set below.

	Category 1 & 2	Category 3	Category 4	Category 5
Within 24 hours	25%	25%	20%	15%
Within 48 hours	30%	30%	30%	25%
Within 72 hours	40%	40%	40%	40%
Within 96 hours	60%	60%	50%	50%
Within 5 days	100%	80%	60%	60%
Within 10 days		100%	80%	70%
Within 14 days			100%	80%
Within 20 days				100%

ATTACHMENT "E"

FHWA-1273

FHWA-1273 – Revised May 1, 2012

REQUIRED CONTRACT PROVISIONS
FEDERAL-AID CONSTRUCTION CONTRACTS

I. General
II. Nondiscrimination
III. Nonsegregated Facilities
IV. Davis-Bacon and Related Act Provisions
V. Contract Work Hours and Safety Standards Act Provisions
VI. Subletting or Assigning the Contract
VII. Safety: Accident Prevention
VIII. False Statements Concerning Highway Projects
IX. Implementation of Clean Air Act and Federal Water Pollution Control Act
X. Compliance with Governmentwide Suspension and Debarment Requirements
XI. Certification Regarding Use of Contract Funds for Lobbying

ATTACHMENTS

A. Employment and Materials Preference for Appalachian Development Highway System or Appalachian Local Access Road Contracts (included in Appalachian contracts only)

I. GENERAL

1. Form FHWA-1273 must be physically incorporated in each construction contract funded under Title 23 (excluding emergency contracts solely intended for debris removal). The contractor (or subcontractor) must insert this form in each subcontract and further require its inclusion in all lower tier subcontracts (excluding purchase orders, rental agreements and other agreements for supplies or services).

The applicable requirements of Form FHWA-1273 are incorporated by reference for work done under any purchase order, rental agreement or agreement for other services. The prime contractor shall be responsible for compliance by any subcontractor, lower-tier subcontractor or service provider.

Form FHWA-1273 must be included in all Federal-aid design-build contracts, in all subcontracts and in lower tier subcontracts (excluding subcontracts for design services, purchase orders, rental agreements and other agreements for supplies or services). The design-builder shall be responsible for compliance by any subcontractor, lower-tier subcontractor or service provider.

Contracting agencies may reference Form FHWA-1273 in bid proposal or request for proposal documents, however, the Form FHWA-1273 must be physically incorporated (not referenced) in all contracts, subcontracts and lower-tier subcontracts (excluding purchase orders, rental agreements and other agreements for supplies or services related to a construction contract).

2. Subject to the applicability criteria noted in the following sections, these contract provisions shall apply to all work performed on the contract by the contractor's own organization and with the assistance of workers under the contractor's immediate superintendence and to all work performed on the contract by piecework, station work, or by subcontract.

3. A breach of any of the stipulations contained in these Required Contract Provisions may be sufficient grounds for withholding of progress payments, withholding of final payment, termination of the contract, suspension / debarment or any other action determined to be appropriate by the contracting agency and FHWA.

4. Selection of Labor: During the performance of this contract, the contractor shall not use convict labor for any purpose within the limits of a construction project on a Federal-aid highway unless it is labor performed by convicts who are on parole, supervised release, or probation. The term Federal-aid highway does not include roadways functionally classified as local roads or rural minor collectors.

II. NONDISCRIMINATION

The provisions of this section related to 23 CFR Part 230 are applicable to all Federal-aid construction contracts and to all related construction subcontracts of $10,000 or more. The provisions of 23 CFR Part 230 are not applicable to material supply, engineering, or architectural service contracts.

In addition, the contractor and all subcontractors must comply with the following policies: Executive Order 11246, 41 CFR 60, 29 CFR 1625-1627, Title 23 USC Section 140, the Rehabilitation Act of 1973, as amended (29 USC 794), Title VI of the Civil Rights Act of 1964, as amended, and related regulations including 49 CFR Parts 21, 26 and 27; and 23 CFR Parts 200, 230, and 633.

The contractor and all subcontractors must comply with: the requirements of the Equal Opportunity Clause in 41 CFR 60-1.4(b) and, for all construction contracts exceeding $10,000, the Standard Federal Equal Employment Opportunity Construction Contract Specifications in 41 CFR 60-4.3.

Note: The U.S. Department of Labor has exclusive authority to determine compliance with Executive Order 11246 and the policies of the Secretary of Labor including 41 CFR 60, and 29 CFR 1625-1627. The contracting agency and the FHWA have the authority and the responsibility to ensure compliance with Title 23 USC Section 140, the Rehabilitation Act of 1973, as amended (29 USC 794), and Title VI of the Civil Rights Act of 1964, as amended, and related regulations including 49 CFR Parts 21, 26 and 27; and 23 CFR Parts 200, 230, and 633.

The following provision is adopted from 23 CFR 230, Appendix A, with appropriate revisions to conform to the U.S. Department of Labor (US DOL) and FHWA requirements.

1. Equal Employment Opportunity: Equal employment opportunity (EEO) requirements not to discriminate and to take affirmative action to assure equal opportunity as set forth under laws, executive orders, rules, regulations (28 CFR 35, 29 CFR 1630, 29 CFR 1625-1627, 41 CFR 60 and 49 CFR 27) and orders of the Secretary of Labor as modified by the provisions prescribed herein, and imposed pursuant to 23 U.S.C. 140 shall constitute the EEO and specific affirmative action standards for the contractor's project activities under

this contract. The provisions of the Americans with Disabilities Act of 1990 (42 U.S.C. 12101 et seq.) set forth under 28 CFR 35 and 29 CFR 1630 are incorporated by reference in this contract. In the execution of this contract, the contractor agrees to comply with the following minimum specific requirement activities of EEO:

a. The contractor will work with the contracting agency and the Federal Government to ensure that it has made every good faith effort to provide equal opportunity with respect to all of its terms and conditions of employment and in their review of activities under the contract.

b. The contractor will accept as its operating policy the following statement:

"It is the policy of this Company to assure that applicants are employed, and that employees are treated during employment, without regard to their race, religion, sex, color, national origin, age or disability. Such action shall include: employment, upgrading, demotion, or transfer; recruitment or recruitment advertising; layoff or termination; rates of pay or other forms of compensation; and selection for training, including apprenticeship, pre-apprenticeship, and/or on-the-job training."

2. EEO Officer: The contractor will designate and make known to the contracting officers an EEO Officer who will have the responsibility for and must be capable of effectively administering and promoting an active EEO program and who must be assigned adequate authority and responsibility to do so.

3. Dissemination of Policy: All members of the contractor's staff who are authorized to hire, supervise, promote, and discharge employees, or who recommend such action, or who are substantially involved in such action, will be made fully cognizant of, and will implement, the contractor's EEO policy and contractual responsibilities to provide EEO in each grade and classification of employment. To ensure that the above agreement will be met, the following actions will be taken as a minimum:

a. Periodic meetings of supervisory and personnel office employees will be conducted before the start of work and then not less often than once every six months, at which time the contractor's EEO policy and its implementation will be reviewed and explained. The meetings will be conducted by the EEO Officer.

b. All new supervisory or personnel office employees will be given a thorough indoctrination by the EEO Officer, covering all major aspects of the contractor's EEO obligations within thirty days following their reporting for duty with the contractor.

c. All personnel who are engaged in direct recruitment for the project will be instructed by the EEO Officer in the contractor's procedures for locating and hiring minorities and women.

d. Notices and posters setting forth the contractor's EEO policy will be placed in areas readily accessible to employees, applicants for employment and potential employees.

e. The contractor's EEO policy and the procedures to implement such policy will be brought to the attention of employees by means of meetings, employee handbooks, or other appropriate means.

4. Recruitment: When advertising for employees, the contractor will include in all advertisements for employees the notation: "An Equal Opportunity Employer." All such advertisements will be placed in publications having a large circulation among minorities and women in the area from which the project work force would normally be derived.

a. The contractor will, unless precluded by a valid bargaining agreement, conduct systematic and direct recruitment through public and private employee referral sources likely to yield qualified minorities and women. To meet this requirement, the contractor will identify sources of potential minority group employees, and establish with such identified sources procedures whereby minority and women applicants may be referred to the contractor for employment consideration.

b. In the event the contractor has a valid bargaining agreement providing for exclusive hiring hall referrals, the contractor is expected to observe the provisions of that agreement to the extent that the system meets the contractor's compliance with EEO contract provisions. Where implementation of such an agreement has the effect of discriminating against minorities or women, or obligates the contractor to do the same, such implementation violates Federal nondiscrimination provisions.

c. The contractor will encourage its present employees to refer minorities and women as applicants for employment. Information and procedures with regard to referring such applicants will be discussed with employees.

5. Personnel Actions: Wages, working conditions, and employee benefits shall be established and administered, and personnel actions of every type, including hiring, upgrading, promotion, transfer, demotion, layoff, and termination, shall be taken without regard to race, color, religion, sex, national origin, age or disability. The following procedures shall be followed:

a. The contractor will conduct periodic inspections of project sites to insure that working conditions and employee facilities do not indicate discriminatory treatment of project site personnel.

b. The contractor will periodically evaluate the spread of wages paid within each classification to determine any evidence of discriminatory wage practices.

c. The contractor will periodically review selected personnel actions in depth to determine whether there is evidence of discrimination. Where evidence is found, the contractor will promptly take corrective action. If the review indicates that the discrimination may extend beyond the actions reviewed, such corrective action shall include all affected persons.

d. The contractor will promptly investigate all complaints of alleged discrimination made to the contractor in connection with its obligations under this contract, will attempt to resolve such complaints, and will take appropriate corrective action within a reasonable time. If the investigation indicates that the discrimination may affect persons other than the complainant, such corrective action shall include such other persons. Upon completion of each investigation, the contractor will inform every complainant of all of their avenues of appeal.

6. Training and Promotion:

a. The contractor will assist in locating, qualifying, and increasing the skills of minorities and women who are

applicants for employment or current employees. Such efforts should be aimed at developing full journey level status employees in the type of trade or job classification involved.

b. Consistent with the contractor's work force requirements and as permissible under Federal and State regulations, the contractor shall make full use of training programs, i.e., apprenticeship, and on-the-job training programs for the geographical area of contract performance. In the event a special provision for training is provided under this contract, this subparagraph will be superseded as indicated in the special provision. The contracting agency may reserve training positions for persons who receive welfare assistance in accordance with 23 U.S.C. 140(a).

c. The contractor will advise employees and applicants for employment of available training programs and entrance requirements for each.

d. The contractor will periodically review the training and promotion potential of employees who are minorities and women and will encourage eligible employees to apply for such training and promotion.

7. Unions: If the contractor relies in whole or in part upon unions as a source of employees, the contractor will use good faith efforts to obtain the cooperation of such unions to increase opportunities for minorities and women. Actions by the contractor, either directly or through a contractor's association acting as agent, will include the procedures set forth below:

a. The contractor will use good faith efforts to develop, in cooperation with the unions, joint training programs aimed toward qualifying more minorities and women for membership in the unions and increasing the skills of minorities and women so that they may qualify for higher paying employment.

b. The contractor will use good faith efforts to incorporate an EEO clause into each union agreement to the end that such union will be contractually bound to refer applicants without regard to their race, color, religion, sex, national origin, age or disability.

c. The contractor is to obtain information as to the referral practices and policies of the labor union except that to the extent such information is within the exclusive possession of the labor union and such labor union refuses to furnish such information to the contractor, the contractor shall so certify to the contracting agency and shall set forth what efforts have been made to obtain such information.

d. In the event the union is unable to provide the contractor with a reasonable flow of referrals within the time limit set forth in the collective bargaining agreement, the contractor will, through independent recruitment efforts, fill the employment vacancies without regard to race, color, religion, sex, national origin, age or disability; making full efforts to obtain qualified and/or qualifiable minorities and women. The failure of a union to provide sufficient referrals (even though it is obligated to provide exclusive referrals under the terms of a collective bargaining agreement) does not relieve the contractor from the requirements of this paragraph. In the event the union referral practice prevents the contractor from meeting the obligations pursuant to Executive Order 11246, as amended, and these special provisions, such contractor shall immediately notify the contracting agency.

8. Reasonable Accommodation for Applicants / Employees with Disabilities: The contractor must be familiar with the requirements for and comply with the Americans with Disabilities Act and all rules and regulations established there under. Employers must provide reasonable accommodation in all employment activities unless to do so would cause an undue hardship.

9. Selection of Subcontractors, Procurement of Materials and Leasing of Equipment: The contractor shall not discriminate on the grounds of race, color, religion, sex, national origin, age or disability in the selection and retention of subcontractors, including procurement of materials and leases of equipment. The contractor shall take all necessary and reasonable steps to ensure nondiscrimination in the administration of this contract.

a. The contractor shall notify all potential subcontractors and suppliers and lessors of their EEO obligations under this contract.

b. The contractor will use good faith efforts to ensure subcontractor compliance with their EEO obligations.

10. Assurance Required by 49 CFR 26.13(b):

a. The requirements of 49 CFR Part 26 and the State DOT's U.S. DOT-approved DBE program are incorporated by reference.

b. The contractor or subcontractor shall not discriminate on the basis of race, color, national origin, or sex in the performance of this contract. The contractor shall carry out applicable requirements of 49 CFR Part 26 in the award and administration of DOT-assisted contracts. Failure by the contractor to carry out these requirements is a material breach of this contract, which may result in the termination of this contract or such other remedy as the contracting agency deems appropriate.

11. Records and Reports: The contractor shall keep such records as necessary to document compliance with the EEO requirements. Such records shall be retained for a period of three years following the date of the final payment to the contractor for all contract work and shall be available at reasonable times and places for inspection by authorized representatives of the contracting agency and the FHWA.

a. The records kept by the contractor shall document the following:

(1) The number and work hours of minority and non-minority group members and women employed in each work classification on the project;

(2) The progress and efforts being made in cooperation with unions, when applicable, to increase employment opportunities for minorities and women; and

(3) The progress and efforts being made in locating, hiring, training, qualifying, and upgrading minorities and women;

b. The contractors and subcontractors will submit an annual report to the contracting agency each July for the duration of the project, indicating the number of minority, women, and non-minority group employees currently engaged in each work classification required by the contract work. This information is to be reported on Form FHWA-1391. The staffing data should represent the project work force on board in all or any part of the last payroll period preceding the end of July. If on-the-job training is being required by special provision, the contractor

will be required to collect and report training data. The employment data should reflect the work force on board during all or any part of the last payroll period preceding the end of July.

III. NONSEGREGATED FACILITIES

This provision is applicable to all Federal-aid construction contracts and to all related construction subcontracts of $10,000 or more.

The contractor must ensure that facilities provided for employees are provided in such a manner that segregation on the basis of race, color, religion, sex, or national origin cannot result. The contractor may neither require such segregated use by written or oral policies nor tolerate such use by employee custom. The contractor's obligation extends further to ensure that its employees are not assigned to perform their services at any location, under the contractor's control, where the facilities are segregated. The term "facilities" includes waiting rooms, work areas, restaurants and other eating areas, time clocks, restrooms, washrooms, locker rooms, and other storage or dressing areas, parking lots, drinking fountains, recreation or entertainment areas, transportation, and housing provided for employees. The contractor shall provide separate or single-user restrooms and necessary dressing or sleeping areas to assure privacy between sexes.

IV. DAVIS-BACON AND RELATED ACT PROVISIONS

This section is applicable to all Federal-aid construction projects exceeding $2,000 and to all related subcontracts and lower-tier subcontracts (regardless of subcontract size). The requirements apply to all projects located within the right-of-way of a roadway that is functionally classified as Federal-aid highway. This excludes roadways functionally classified as local roads or rural minor collectors, which are exempt. Contracting agencies may elect to apply these requirements to other projects.

The following provisions are from the U.S. Department of Labor regulations in 29 CFR 5.5 "Contract provisions and related matters" with minor revisions to conform to the FHWA-1273 format and FHWA program requirements.

1. Minimum wages

a. All laborers and mechanics employed or working upon the site of the work, will be paid unconditionally and not less often than once a week, and without subsequent deduction or rebate on any account (except such payroll deductions as are permitted by regulations issued by the Secretary of Labor under the Copeland Act (29 CFR part 3)), the full amount of wages and bona fide fringe benefits (or cash equivalents thereof) due at time of payment computed at rates not less than those contained in the wage determination of the Secretary of Labor which is attached hereto and made a part hereof, regardless of any contractual relationship which may be alleged to exist between the contractor and such laborers and mechanics.

Contributions made or costs reasonably anticipated for bona fide fringe benefits under section 1(b)(2) of the Davis-Bacon Act on behalf of laborers or mechanics are considered wages paid to such laborers or mechanics, subject to the provisions of paragraph 1.d. of this section; also, regular contributions made or costs incurred for more than a weekly period (but not less often than quarterly) under plans, funds, or programs which cover the particular weekly period, are deemed to be constructively made or incurred during such weekly period. Such laborers and mechanics shall be paid the appropriate wage rate and fringe benefits on the wage determination for the classification of work actually performed, without regard to skill, except as provided in 29 CFR 5.5(a)(4). Laborers or mechanics performing work in more than one classification may be compensated at the rate specified for each classification for the time actually worked therein: Provided, That the employer's payroll records accurately set forth the time spent in each classification in which work is performed. The wage determination (including any additional classification and wage rates conformed under paragraph 1.b. of this section) and the Davis-Bacon poster (WH–1321) shall be posted at all times by the contractor and its subcontractors at the site of the work in a prominent and accessible place where it can be easily seen by the workers.

b.(1) The contracting officer shall require that any class of laborers or mechanics, including helpers, which is not listed in the wage determination and which is to be employed under the contract shall be classified in conformance with the wage determination. The contracting officer shall approve an additional classification and wage rate and fringe benefits therefore only when the following criteria have been met:

(i) The work to be performed by the classification requested is not performed by a classification in the wage determination; and

(ii) The classification is utilized in the area by the construction industry; and

(iii) The proposed wage rate, including any bona fide fringe benefits, bears a reasonable relationship to the wage rates contained in the wage determination.

(2) If the contractor and the laborers and mechanics to be employed in the classification (if known), or their representatives, and the contracting officer agree on the classification and wage rate (including the amount designated for fringe benefits where appropriate), a report of the action taken shall be sent by the contracting officer to the Administrator of the Wage and Hour Division, Employment Standards Administration, U.S. Department of Labor, Washington, DC 20210. The Administrator, or an authorized representative, will approve, modify, or disapprove every additional classification action within 30 days of receipt and so advise the contracting officer or will notify the contracting officer within the 30-day period that additional time is necessary.

(3) In the event the contractor, the laborers or mechanics to be employed in the classification or their representatives, and the contracting officer do not agree on the proposed classification and wage rate (including the amount designated for fringe benefits, where appropriate), the contracting officer shall refer the questions, including the views of all interested parties and the recommendation of the contracting officer, to the Wage and Hour Administrator for determination. The Wage and Hour Administrator, or an authorized representative, will issue a determination within 30 days of receipt and so advise the contracting officer or

will notify the contracting officer within the 30-day period that additional time is necessary.

(4) The wage rate (including fringe benefits where appropriate) determined pursuant to paragraphs 1.b.(2) or 1.b.(3) of this section, shall be paid to all workers performing work in the classification under this contract from the first day on which work is performed in the classification.

c. Whenever the minimum wage rate prescribed in the contract for a class of laborers or mechanics includes a fringe benefit which is not expressed as an hourly rate, the contractor shall either pay the benefit as stated in the wage determination or shall pay another bona fide fringe benefit or an hourly cash equivalent thereof.

d. If the contractor does not make payments to a trustee or other third person, the contractor may consider as part of the wages of any laborer or mechanic the amount of any costs reasonably anticipated in providing bona fide fringe benefits under a plan or program, Provided, That the Secretary of Labor has found, upon the written request of the contractor, that the applicable standards of the Davis-Bacon Act have been met. The Secretary of Labor may require the contractor to set aside in a separate account assets for the meeting of obligations under the plan or program.

2. Withholding

The contracting agency shall upon its own action or upon written request of an authorized representative of the Department of Labor, withhold or cause to be withheld from the contractor under this contract, or any other Federal contract with the same prime contractor, or any other federally-assisted contract subject to Davis-Bacon prevailing wage requirements, which is held by the same prime contractor, so much of the accrued payments or advances as may be considered necessary to pay laborers and mechanics, including apprentices, trainees, and helpers, employed by the contractor or any subcontractor the full amount of wages required by the contract. In the event of failure to pay any laborer or mechanic, including any apprentice, trainee, or helper, employed or working on the site of the work, all or part of the wages required by the contract, the contracting agency may, after written notice to the contractor, take such action as may be necessary to cause the suspension of any further payment, advance, or guarantee of funds until such violations have ceased.

3. Payrolls and basic records

a. Payrolls and basic records relating thereto shall be maintained by the contractor during the course of the work and preserved for a period of three years thereafter for all laborers and mechanics working at the site of the work. Such records shall contain the name, address, and social security number of each such worker, his or her correct classification, hourly rates of wages paid (including rates of contributions or costs anticipated for bona fide fringe benefits or cash equivalents thereof of the types described in section 1(b)(2)(B) of the Davis-Bacon Act), daily and weekly number of hours worked, deductions made and actual wages paid. Whenever the Secretary of Labor has found under 29 CFR 5.5(a)(1)(iv) that the wages of any laborer or mechanic include the amount of any costs reasonably anticipated in providing benefits under a plan or program described in section 1(b)(2)(B) of the Davis-Bacon Act, the contractor shall maintain records which show that the commitment to provide such benefits is enforceable, that the plan or program is financially responsible, and that the plan or program has been communicated in writing to the laborers or mechanics affected, and records which show the costs anticipated or the actual cost incurred in providing such benefits. Contractors employing apprentices or trainees under approved programs shall maintain written evidence of the registration of apprenticeship programs and certification of trainee programs, the registration of the apprentices and trainees, and the ratios and wage rates prescribed in the applicable programs.

b.(1) The contractor shall submit weekly for each week in which any contract work is performed a copy of all payrolls to the contracting agency. The payrolls submitted shall set out accurately and completely all of the information required to be maintained under 29 CFR 5.5(a)(3)(i), except that full social security numbers and home addresses shall not be included on weekly transmittals. Instead the payrolls shall only need to include an individually identifying number for each employee (e.g. , the last four digits of the employee's social security number). The required weekly payroll information may be submitted in any form desired. Optional Form WH–347 is available for this purpose from the Wage and Hour Division Web site at http://www.dol.gov/esa/whd/forms/wh347instr.htm or its successor site. The prime contractor is responsible for the submission of copies of payrolls by all subcontractors. Contractors and subcontractors shall maintain the full social security number and current address of each covered worker, and shall provide them upon request to the contracting agency for transmission to the State DOT, the FHWA or the Wage and Hour Division of the Department of Labor for purposes of an investigation or audit of compliance with prevailing wage requirements. It is not a violation of this section for a prime contractor to require a subcontractor to provide addresses and social security numbers to the prime contractor for its own records, without weekly submission to the contracting agency..

(2) Each payroll submitted shall be accompanied by a "Statement of Compliance," signed by the contractor or subcontractor or his or her agent who pays or supervises the payment of the persons employed under the contract and shall certify the following:

(i) That the payroll for the payroll period contains the information required to be provided under §5.5 (a)(3)(ii) of Regulations, 29 CFR part 5, the appropriate information is being maintained under §5.5 (a)(3)(i) of Regulations, 29 CFR part 5, and that such information is correct and complete;

(ii) That each laborer or mechanic (including each helper, apprentice, and trainee) employed on the contract during the payroll period has been paid the full weekly wages earned, without rebate, either directly or indirectly, and that no deductions have been made either directly or indirectly from the full wages earned, other than permissible deductions as set forth in Regulations, 29 CFR part 3;

(iii) That each laborer or mechanic has been paid not less than the applicable wage rates and fringe benefits or cash equivalents for the classification of work performed, as specified in the applicable wage determination incorporated into the contract.

(3) The weekly submission of a properly executed certification set forth on the reverse side of Optional Form WH–347 shall satisfy the requirement for submission of the "Statement of Compliance" required by paragraph 3.b.(2) of this section.

(4) The falsification of any of the above certifications may subject the contractor or subcontractor to civil or criminal prosecution under section 1001 of title 18 and section 231 of title 31 of the United States Code.

c. The contractor or subcontractor shall make the records required under paragraph 3.a. of this section available for inspection, copying, or transcription by authorized representatives of the contracting agency, the State DOT, the FHWA, or the Department of Labor, and shall permit such representatives to interview employees during working hours on the job. If the contractor or subcontractor fails to submit the required records or to make them available, the FHWA may, after written notice to the contractor, the contracting agency or the State DOT, take such action as may be necessary to cause the suspension of any further payment, advance, or guarantee of funds. Furthermore, failure to submit the required records upon request or to make such records available may be grounds for debarment action pursuant to 29 CFR 5.12.

4. Apprentices and trainees

a. Apprentices (programs of the USDOL).

Apprentices will be permitted to work at less than the predetermined rate for the work they performed when they are employed pursuant to and individually registered in a bona fide apprenticeship program registered with the U.S. Department of Labor, Employment and Training Administration, Office of Apprenticeship Training, Employer and Labor Services, or with a State Apprenticeship Agency recognized by the Office, or if a person is employed in his or her first 90 days of probationary employment as an apprentice in such an apprenticeship program, who is not individually registered in the program, but who has been certified by the Office of Apprenticeship Training, Employer and Labor Services or a State Apprenticeship Agency (where appropriate) to be eligible for probationary employment as an apprentice.

The allowable ratio of apprentices to journeymen on the job site in any craft classification shall not be greater than the ratio permitted to the contractor as to the entire work force under the registered program. Any worker listed on a payroll at an apprentice wage rate, who is not registered or otherwise employed as stated above, shall be paid not less than the applicable wage rate on the wage determination for the classification of work actually performed. In addition, any apprentice performing work on the job site in excess of the ratio permitted under the registered program shall be paid not less than the applicable wage rate on the wage determination for the work actually performed. Where a contractor is performing construction on a project in a locality other than that in which its program is registered, the ratios and wage rates (expressed in percentages of the journeyman's hourly rate) specified in the contractor's or subcontractor's registered program shall be observed.

Every apprentice must be paid at not less than the rate specified in the registered program for the apprentice's level of progress, expressed as a percentage of the journeymen hourly rate specified in the applicable wage determination. Apprentices shall be paid fringe benefits in accordance with the provisions of the apprenticeship program. If the apprenticeship program does not specify fringe benefits, apprentices must be paid the full amount of fringe benefits listed on the wage determination for the applicable classification. If the Administrator determines that a different practice prevails for the applicable apprentice classification, fringes shall be paid in accordance with that determination.

In the event the Office of Apprenticeship Training, Employer and Labor Services, or a State Apprenticeship Agency recognized by the Office, withdraws approval of an apprenticeship program, the contractor will no longer be permitted to utilize apprentices at less than the applicable predetermined rate for the work performed until an acceptable program is approved.

b. Trainees (programs of the USDOL).

Except as provided in 29 CFR 5.16, trainees will not be permitted to work at less than the predetermined rate for the work performed unless they are employed pursuant to and individually registered in a program which has received prior approval, evidenced by formal certification by the U.S. Department of Labor, Employment and Training Administration.

The ratio of trainees to journeymen on the job site shall not be greater than permitted under the plan approved by the Employment and Training Administration.

Every trainee must be paid at not less than the rate specified in the approved program for the trainee's level of progress, expressed as a percentage of the journeyman hourly rate specified in the applicable wage determination. Trainees shall be paid fringe benefits in accordance with the provisions of the trainee program. If the trainee program does not mention fringe benefits, trainees shall be paid the full amount of fringe benefits listed on the wage determination unless the Administrator of the Wage and Hour Division determines that there is an apprenticeship program associated with the corresponding journeyman wage rate on the wage determination which provides for less than full fringe benefits for apprentices. Any employee listed on the payroll at a trainee rate who is not registered and participating in a training plan approved by the Employment and Training Administration shall be paid not less than the applicable wage rate on the wage determination for the classification of work actually performed. In addition, any trainee performing work on the job site in excess of the ratio permitted under the registered program shall be paid not less than the applicable wage rate on the wage determination for the work actually performed.

In the event the Employment and Training Administration withdraws approval of a training program, the contractor will no longer be permitted to utilize trainees at less than the applicable predetermined rate for the work performed until an acceptable program is approved.

c. Equal employment opportunity. The utilization of apprentices, trainees and journeymen under this part shall be in conformity with the equal employment opportunity requirements of Executive Order 11246, as amended, and 29 CFR part 30.

d. Apprentices and Trainees (programs of the U.S. DOT).

Apprentices and trainees working under apprenticeship and skill training programs which have been certified by the Secretary of Transportation as promoting EEO in connection with Federal-aid highway construction programs are not subject to the requirements of paragraph 4 of this Section IV. The straight time hourly wage rates for apprentices and trainees under such programs will be established by the particular programs. The ratio of apprentices and trainees to journeymen shall not be greater than permitted by the terms of the particular program.

5. Compliance with Copeland Act requirements. The contractor shall comply with the requirements of 29 CFR part 3, which are incorporated by reference in this contract.

6. Subcontracts. The contractor or subcontractor shall insert Form FHWA-1273 in any subcontracts and also require the subcontractors to include Form FHWA-1273 in any lower tier subcontracts. The prime contractor shall be responsible for the compliance by any subcontractor or lower tier subcontractor with all the contract clauses in 29 CFR 5.5.

7. Contract termination: debarment. A breach of the contract clauses in 29 CFR 5.5 may be grounds for termination of the contract, and for debarment as a contractor and a subcontractor as provided in 29 CFR 5.12.

8. Compliance with Davis-Bacon and Related Act requirements. All rulings and interpretations of the Davis-Bacon and Related Acts contained in 29 CFR parts 1, 3, and 5 are herein incorporated by reference in this contract.

9. Disputes concerning labor standards. Disputes arising out of the labor standards provisions of this contract shall not be subject to the general disputes clause of this contract. Such disputes shall be resolved in accordance with the procedures of the Department of Labor set forth in 29 CFR parts 5, 6, and 7. Disputes within the meaning of this clause include disputes between the contractor (or any of its subcontractors) and the contracting agency, the U.S. Department of Labor, or the employees or their representatives.

10. Certification of eligibility.

a. By entering into this contract, the contractor certifies that neither it (nor he or she) nor any person or firm who has an interest in the contractor's firm is a person or firm ineligible to be awarded Government contracts by virtue of section 3(a) of the Davis-Bacon Act or 29 CFR 5.12(a)(1).

b. No part of this contract shall be subcontracted to any person or firm ineligible for award of a Government contract by virtue of section 3(a) of the Davis-Bacon Act or 29 CFR 5.12(a)(1).

c. The penalty for making false statements is prescribed in the U.S. Criminal Code, 18 U.S.C. 1001.

V. CONTRACT WORK HOURS AND SAFETY STANDARDS ACT

The following clauses apply to any Federal-aid construction contract in an amount in excess of $100,000 and subject to the overtime provisions of the Contract Work Hours and Safety Standards Act. These clauses shall be inserted in addition to the clauses required by 29 CFR 5.5(a) or 29 CFR 4.6. As used in this paragraph, the terms laborers and mechanics include watchmen and guards.

1. Overtime requirements. No contractor or subcontractor contracting for any part of the contract work which may require or involve the employment of laborers or mechanics shall require or permit any such laborer or mechanic in any workweek in which he or she is employed on such work to work in excess of forty hours in such workweek unless such laborer or mechanic receives compensation at a rate not less than one and one-half times the basic rate of pay for all hours worked in excess of forty hours in such workweek.

2. Violation; liability for unpaid wages; liquidated damages. In the event of any violation of the clause set forth in paragraph (1.) of this section, the contractor and any subcontractor responsible therefor shall be liable for the unpaid wages. In addition, such contractor and subcontractor shall be liable to the United States (in the case of work done under contract for the District of Columbia or a territory, to such District or to such territory), for liquidated damages. Such liquidated damages shall be computed with respect to each individual laborer or mechanic, including watchmen and guards, employed in violation of the clause set forth in paragraph (1.) of this section, in the sum of $10 for each calendar day on which such individual was required or permitted to work in excess of the standard workweek of forty hours without payment of the overtime wages required by the clause set forth in paragraph (1.) of this section.

3. Withholding for unpaid wages and liquidated damages. The FHWA or the contacting agency shall upon its own action or upon written request of an authorized representative of the Department of Labor withhold or cause to be withheld, from any moneys payable on account of work performed by the contractor or subcontractor under any such contract or any other Federal contract with the same prime contractor, or any other federally-assisted contract subject to the Contract Work Hours and Safety Standards Act, which is held by the same prime contractor, such sums as may be determined to be necessary to satisfy any liabilities of such contractor or subcontractor for unpaid wages and liquidated damages as provided in the clause set forth in paragraph (2.) of this section.

4. Subcontracts. The contractor or subcontractor shall insert in any subcontracts the clauses set forth in paragraph (1.) through (4.) of this section and also a clause requiring the subcontractors to include these clauses in any lower tier subcontracts. The prime contractor shall be responsible for compliance by any subcontractor or lower tier subcontractor with the clauses set forth in paragraphs (1.) through (4.) of this section.

VI. SUBLETTING OR ASSIGNING THE CONTRACT

This provision is applicable to all Federal-aid construction contracts on the National Highway System.

1. The contractor shall perform with its own organization contract work amounting to not less than 30 percent (or a greater percentage if specified elsewhere in the contract) of the total original contract price, excluding any specialty items designated by the contracting agency. Specialty items may be performed by subcontract and the amount of any such specialty items performed may be deducted from the total original contract price before computing the amount of work required to be performed by the contractor's own organization (23 CFR 635.116).

a. The term "perform work with its own organization" refers to workers employed or leased by the prime contractor, and equipment owned or rented by the prime contractor, with or without operators. Such term does not include employees or equipment of a subcontractor or lower tier subcontractor, agents of the prime contractor, or any other assignees. The term may include payments for the costs of hiring leased employees from an employee leasing firm meeting all relevant Federal and State regulatory requirements. Leased employees may only be included in this term if the prime contractor meets all of the following conditions:

(1) the prime contractor maintains control over the supervision of the day-to-day activities of the leased employees;
(2) the prime contractor remains responsible for the quality of the work of the leased employees;
(3) the prime contractor retains all power to accept or exclude individual employees from work on the project; and
(4) the prime contractor remains ultimately responsible for the payment of predetermined minimum wages, the submission of payrolls, statements of compliance and all other Federal regulatory requirements.

b. "Specialty Items" shall be construed to be limited to work that requires highly specialized knowledge, abilities, or equipment not ordinarily available in the type of contracting organizations qualified and expected to bid or propose on the contract as a whole and in general are to be limited to minor components of the overall contract.

2. The contract amount upon which the requirements set forth in paragraph (1) of Section VI is computed includes the cost of material and manufactured products which are to be purchased or produced by the contractor under the contract provisions.

3. The contractor shall furnish (a) a competent superintendent or supervisor who is employed by the firm, has full authority to direct performance of the work in accordance with the contract requirements, and is in charge of all construction operations (regardless of who performs the work) and (b) such other of its own organizational resources (supervision, management, and engineering services) as the contracting officer determines is necessary to assure the performance of the contract.

4. No portion of the contract shall be sublet, assigned or otherwise disposed of except with the written consent of the contracting officer, or authorized representative, and such consent when given shall not be construed to relieve the contractor of any responsibility for the fulfillment of the contract. Written consent will be given only after the contracting agency has assured that each subcontract is evidenced in writing and that it contains all pertinent provisions and requirements of the prime contract.

5. The 30% self-performance requirement of paragraph (1) is not applicable to design-build contracts; however, contracting agencies may establish their own self-performance requirements.

VII. SAFETY: ACCIDENT PREVENTION

This provision is applicable to all Federal-aid construction contracts and to all related subcontracts.

1. In the performance of this contract the contractor shall comply with all applicable Federal, State, and local laws governing safety, health, and sanitation (23 CFR 635). The contractor shall provide all safeguards, safety devices and protective equipment and take any other needed actions as it determines, or as the contracting officer may determine, to be reasonably necessary to protect the life and health of employees on the job and the safety of the public and to protect property in connection with the performance of the work covered by the contract.

2. It is a condition of this contract, and shall be made a condition of each subcontract, which the contractor enters into pursuant to this contract, that the contractor and any subcontractor shall not permit any employee, in performance of the contract, to work in surroundings or under conditions which are unsanitary, hazardous or dangerous to his/her health or safety, as determined under construction safety and health standards (29 CFR 1926) promulgated by the Secretary of Labor, in accordance with Section 107 of the Contract Work Hours and Safety Standards Act (40 U.S.C. 3704).

3. Pursuant to 29 CFR 1926.3, it is a condition of this contract that the Secretary of Labor or authorized representative thereof, shall have right of entry to any site of contract performance to inspect or investigate the matter of compliance with the construction safety and health standards and to carry out the duties of the Secretary under Section 107 of the Contract Work Hours and Safety Standards Act (40 U.S.C.3704).

VIII. FALSE STATEMENTS CONCERNING HIGHWAY PROJECTS

This provision is applicable to all Federal-aid construction contracts and to all related subcontracts.

In order to assure high quality and durable construction in conformity with approved plans and specifications and a high degree of reliability on statements and representations made by engineers, contractors, suppliers, and workers on Federal-aid highway projects, it is essential that all persons concerned with the project perform their functions as carefully, thoroughly, and honestly as possible. Willful falsification, distortion, or misrepresentation with respect to any facts related to the project is a violation of Federal law. To prevent any misunderstanding regarding the seriousness of these and similar acts, Form FHWA-1022 shall be posted on each Federal-aid highway project (23 CFR 635) in one or more places where it is readily available to all persons concerned with the project:

18 U.S.C. 1020 reads as follows:

"Whoever, being an officer, agent, or employee of the United States, or of any State or Territory, or whoever, whether a person, association, firm, or corporation, knowingly makes any false statement, false representation, or false report as to the character, quality, quantity, or cost of the material used or to be used, or the quantity or quality of the work performed or to be performed, or the cost thereof in connection with the submission of plans, maps, specifications, contracts, or costs of construction on any highway or related project submitted for approval to the Secretary of Transportation; or

Whoever knowingly makes any false statement, false representation, false report or false claim with respect to the character, quality, quantity, or cost of any work performed or to be performed, or materials furnished or to be furnished, in connection with the construction of any highway or related project approved by the Secretary of Transportation; or

Whoever knowingly makes any false statement or false representation as to material fact in any statement, certificate, or report submitted pursuant to provisions of the Federal-aid Roads Act approved July 1, 1916, (39 Stat. 355), as amended and supplemented;

Shall be fined under this title or imprisoned not more than 5 years or both."

IX. IMPLEMENTATION OF CLEAN AIR ACT AND FEDERAL WATER POLLUTION CONTROL ACT

This provision is applicable to all Federal-aid construction contracts and to all related subcontracts.

By submission of this bid/proposal or the execution of this contract, or subcontract, as appropriate, the bidder, proposer, Federal-aid construction contractor, or subcontractor, as appropriate, will be deemed to have stipulated as follows:

1. That any person who is or will be utilized in the performance of this contract is not prohibited from receiving an award due to a violation of Section 508 of the Clean Water Act or Section 306 of the Clean Air Act.
2. That the contractor agrees to include or cause to be included the requirements of paragraph (1) of this Section X in every subcontract, and further agrees to take such action as the contracting agency may direct as a means of enforcing such requirements.

X. CERTIFICATION REGARDING DEBARMENT, SUSPENSION, INELIGIBILITY AND VOLUNTARY EXCLUSION

This provision is applicable to all Federal-aid construction contracts, design-build contracts, subcontracts, lower-tier subcontracts, purchase orders, lease agreements, consultant contracts or any other covered transaction requiring FHWA approval or that is estimated to cost $25,000 or more – as defined in 2 CFR Parts 180 and 1200.

1. **Instructions for Certification – First Tier Participants:**

a. By signing and submitting this proposal, the prospective first tier participant is providing the certification set out below.

b. The inability of a person to provide the certification set out below will not necessarily result in denial of participation in this covered transaction. The prospective first tier participant shall submit an explanation of why it cannot provide the certification set out below. The certification or explanation will be considered in connection with the department or agency's determination whether to enter into this transaction. However, failure of the prospective first tier participant to furnish a certification or an explanation shall disqualify such a person from participation in this transaction.

c. The certification in this clause is a material representation of fact upon which reliance was placed when the contracting agency determined to enter into this transaction. If it is later determined that the prospective participant knowingly rendered an erroneous certification, in addition to other remedies available to the Federal Government, the contracting agency may terminate this transaction for cause of default.

d. The prospective first tier participant shall provide immediate written notice to the contracting agency to whom this proposal is submitted if any time the prospective first tier participant learns that its certification was erroneous when submitted or has become erroneous by reason of changed circumstances.

e. The terms "covered transaction," "debarred," "suspended," "ineligible," "participant," "person," "principal," and "voluntarily excluded," as used in this clause, are defined in 2 CFR Parts 180 and 1200. "First Tier Covered Transactions" refers to any covered transaction between a grantee or subgrantee of Federal funds and a participant (such as the prime or general contract). "Lower Tier Covered Transactions" refers to any covered transaction under a First Tier Covered Transaction (such as subcontracts). "First Tier Participant" refers to the participant who has entered into a covered transaction with a grantee or subgrantee of Federal funds (such as the prime or general contractor). "Lower Tier Participant" refers any participant who has entered into a covered transaction with a First Tier Participant or other Lower Tier Participants (such as subcontractors and suppliers).

f. The prospective first tier participant agrees by submitting this proposal that, should the proposed covered transaction be entered into, it shall not knowingly enter into any lower tier covered transaction with a person who is debarred, suspended, declared ineligible, or voluntarily excluded from participation in this covered transaction, unless authorized by the department or agency entering into this transaction.

g. The prospective first tier participant further agrees by submitting this proposal that it will include the clause titled "Certification Regarding Debarment, Suspension, Ineligibility and Voluntary Exclusion-Lower Tier Covered Transactions," provided by the department or contracting agency, entering into this covered transaction, without modification, in all lower tier covered transactions and in all solicitations for lower tier covered transactions exceeding the $25,000 threshold.

h. A participant in a covered transaction may rely upon a certification of a prospective participant in a lower tier covered transaction that is not debarred, suspended, ineligible, or voluntarily excluded from the covered transaction, unless it knows that the certification is erroneous. A participant is responsible for ensuring that its principals are not suspended, debarred, or otherwise ineligible to participate in covered transactions. To verify the eligibility of its principals, as well as the eligibility of any lower tier prospective participants, each participant may, but is not required to, check the Excluded Parties List System website (https://www.epls.gov/), which is compiled by the General Services Administration.

i. Nothing contained in the foregoing shall be construed to require the establishment of a system of records in order to render in good faith the certification required by this clause. The knowledge and information of the prospective participant is not required to exceed that which is normally possessed by a prudent person in the ordinary course of business dealings.

j. Except for transactions authorized under paragraph (f) of these instructions, if a participant in a covered transaction knowingly enters into a lower tier covered transaction with a person who is suspended, debarred, ineligible, or voluntarily excluded from participation in this transaction, in addition to other remedies available to the Federal Government, the department or agency may terminate this transaction for cause or default.

* * * * *

2. Certification Regarding Debarment, Suspension, Ineligibility and Voluntary Exclusion – First Tier Participants:

a. The prospective first tier participant certifies to the best of its knowledge and belief, that it and its principals:

(1) Are not presently debarred, suspended, proposed for debarment, declared ineligible, or voluntarily excluded from participating in covered transactions by any Federal department or agency;

(2) Have not within a three-year period preceding this proposal been convicted of or had a civil judgment rendered against them for commission of fraud or a criminal offense in connection with obtaining, attempting to obtain, or performing a public (Federal, State or local) transaction or contract under a public transaction; violation of Federal or State antitrust statutes or commission of embezzlement, theft, forgery, bribery, falsification or destruction of records, making false statements, or receiving stolen property;

(3) Are not presently indicted for or otherwise criminally or civilly charged by a governmental entity (Federal, State or local) with commission of any of the offenses enumerated in paragraph (a)(2) of this certification; and

(4) Have not within a three-year period preceding this application/proposal had one or more public transactions (Federal, State or local) terminated for cause or default.

b. Where the prospective participant is unable to certify to any of the statements in this certification, such prospective participant shall attach an explanation to this proposal.

2. **Instructions for Certification - Lower Tier Participants:**

(Applicable to all subcontracts, purchase orders and other lower tier transactions requiring prior FHWA approval or estimated to cost $25,000 or more - 2 CFR Parts 180 and 1200)

a. By signing and submitting this proposal, the prospective lower tier is providing the certification set out below.

b. The certification in this clause is a material representation of fact upon which reliance was placed when this transaction was entered into. If it is later determined that the prospective lower tier participant knowingly rendered an erroneous certification, in addition to other remedies available to the Federal Government, the department, or agency with which this transaction originated may pursue available remedies, including suspension and/or debarment.

c. The prospective lower tier participant shall provide immediate written notice to the person to which this proposal is submitted if at any time the prospective lower tier participant learns that its certification was erroneous by reason of changed circumstances.

d. The terms "covered transaction," "debarred," "suspended," "ineligible," "participant," "person," "principal," and "voluntarily excluded," as used in this clause, are defined in 2 CFR Parts 180 and 1200. You may contact the person to which this proposal is submitted for assistance in obtaining a copy of those regulations. "First Tier Covered Transactions" refers to any covered transaction between a grantee or subgrantee of Federal funds and a participant (such as the prime or general contract). "Lower Tier Covered Transactions" refers to any covered transaction under a First Tier Covered Transaction (such as subcontracts). "First Tier Participant" refers to the participant who has entered into a covered transaction with a grantee or subgrantee of Federal funds (such as the prime or general contractor). "Lower Tier Participant" refers any participant who has entered into a covered transaction with a First Tier Participant or other Lower Tier Participants (such as subcontractors and suppliers).

e. The prospective lower tier participant agrees by submitting this proposal that, should the proposed covered transaction be entered into, it shall not knowingly enter into any lower tier covered transaction with a person who is debarred, suspended, declared ineligible, or voluntarily excluded from participation in this covered transaction, unless authorized by the department or agency with which this transaction originated.

f. The prospective lower tier participant further agrees by submitting this proposal that it will include this clause titled "Certification Regarding Debarment, Suspension, Ineligibility and Voluntary Exclusion-Lower Tier Covered Transaction," without modification, in all lower tier covered transactions and in all solicitations for lower tier covered transactions exceeding the $25,000 threshold.

g. A participant in a covered transaction may rely upon a certification of a prospective participant in a lower tier covered transaction that is not debarred, suspended, ineligible, or voluntarily excluded from the covered transaction, unless it knows that the certification is erroneous. A participant is responsible for ensuring that its principals are not suspended, debarred, or otherwise ineligible to participate in covered transactions. To verify the eligibility of its principals, as well as the eligibility of any lower tier prospective participants, each participant may, but is not required to, check the Excluded Parties List System website (https://www.epls.gov/), which is compiled by the General Services Administration.

h. Nothing contained in the foregoing shall be construed to require establishment of a system of records in order to render in good faith the certification required by this clause. The knowledge and information of participant is not required to exceed that which is normally possessed by a prudent person in the ordinary course of business dealings.

i. Except for transactions authorized under paragraph e of these instructions, if a participant in a covered transaction knowingly enters into a lower tier covered transaction with a person who is suspended, debarred, ineligible, or voluntarily excluded from participation in this transaction, in addition to other remedies available to the Federal Government, the

department or agency with which this transaction originated may pursue available remedies, including suspension and/or debarment.

* * * * *

Certification Regarding Debarment, Suspension, Ineligibility and Voluntary Exclusion--Lower Tier Participants:

1. The prospective lower tier participant certifies, by submission of this proposal, that neither it nor its principals is presently debarred, suspended, proposed for debarment, declared ineligible, or voluntarily excluded from participating in covered transactions by any Federal department or agency.

2. Where the prospective lower tier participant is unable to certify to any of the statements in this certification, such prospective participant shall attach an explanation to this proposal.

* * * * *

XI. CERTIFICATION REGARDING USE OF CONTRACT FUNDS FOR LOBBYING

This provision is applicable to all Federal-aid construction contracts and to all related subcontracts which exceed $100,000 (49 CFR 20).

1. The prospective participant certifies, by signing and submitting this bid or proposal, to the best of his or her knowledge and belief, that:

a. No Federal appropriated funds have been paid or will be paid, by or on behalf of the undersigned, to any person for influencing or attempting to influence an officer or employee of any Federal agency, a Member of Congress, an officer or employee of Congress, or an employee of a Member of Congress in connection with the awarding of any Federal contract, the making of any Federal grant, the making of any Federal loan, the entering into of any cooperative agreement, and the extension, continuation, renewal, amendment, or modification of any Federal contract, grant, loan, or cooperative agreement.

b. If any funds other than Federal appropriated funds have been paid or will be paid to any person for influencing or attempting to influence an officer or employee of any Federal agency, a Member of Congress, an officer or employee of Congress, or an employee of a Member of Congress in connection with this Federal contract, grant, loan, or cooperative agreement, the undersigned shall complete and submit Standard Form-LLL, "Disclosure Form to Report Lobbying," in accordance with its instructions.

2. This certification is a material representation of fact upon which reliance was placed when this transaction was made or entered into. Submission of this certification is a prerequisite for making or entering into this transaction imposed by 31 U.S.C. 1352. Any person who fails to file the required certification shall be subject to a civil penalty of not less than $10,000 and not more than $100,000 for each such failure.

3. The prospective participant also agrees by submitting its bid or proposal that the participant shall require that the language of this certification be included in all lower tier subcontracts, which exceed $100,000 and that all such recipients shall certify and disclose accordingly.

ATTACHMENT A - EMPLOYMENT AND MATERIALS PREFERENCE FOR APPALACHIAN DEVELOPMENT HIGHWAY SYSTEM OR APPALACHIAN LOCAL ACCESS ROAD CONTRACTS

This provision is applicable to all Federal-aid projects funded under the Appalachian Regional Development Act of 1965.

1. During the performance of this contract, the contractor undertaking to do work which is, or reasonably may be, done as on-site work, shall give preference to qualified persons who regularly reside in the labor area as designated by the DOL wherein the contract work is situated, or the subregion, or the Appalachian counties of the State wherein the contract work is situated, except:

a. To the extent that qualified persons regularly residing in the area are not available.

b. For the reasonable needs of the contractor to employ supervisory or specially experienced personnel necessary to assure an efficient execution of the contract work.

c. For the obligation of the contractor to offer employment to present or former employees as the result of a lawful collective bargaining contract, provided that the number of nonresident persons employed under this subparagraph (1c) shall not exceed 20 percent of the total number of employees employed by the contractor on the contract work, except as provided in subparagraph (4) below.

2. The contractor shall place a job order with the State Employment Service indicating (a) the classifications of the laborers, mechanics and other employees required to perform the contract work, (b) the number of employees required in each classification, (c) the date on which the participant estimates such employees will be required, and (d) any other pertinent information required by the State Employment Service to complete the job order form. The job order may be placed with the State Employment Service in writing or by telephone. If during the course of the contract work, the information submitted by the contractor in the original job order is substantially modified, the participant shall promptly notify the State Employment Service.

3. The contractor shall give full consideration to all qualified job applicants referred to him by the State Employment Service. The contractor is not required to grant employment to any job applicants who, in his opinion, are not qualified to perform the classification of work required.

4. If, within one week following the placing of a job order by the contractor with the State Employment Service, the State Employment Service is unable to refer any qualified job applicants to the contractor, or less than the number requested, the State Employment Service will forward a certificate to the contractor indicating the unavailability of applicants. Such certificate shall be made a part of the contractor's permanent project records. Upon receipt of this certificate, the contractor may employ persons who do not normally reside in the labor area to fill positions covered by the certificate, notwithstanding the provisions of subparagraph (1c) above.

5. The provisions of 23 CFR 633.207(e) allow the contracting agency to provide a contractual preference for the use of mineral resource materials native to the Appalachian region.

6. The contractor shall include the provisions of Sections 1 through 4 of this Attachment A in every subcontract for work which is, or reasonably may be, done as on-site work.

ATTACHMENT "F"

BUY AMERICA REQUIREMENTS

Source of Supply – Steel and Iron (Federal Aid Contracts Only): For Federal-aid contracts, the Contractor will only use steel and iron produced in the United States, in accordance with the buy America provisions of 23 CFR 635.410. Contractor will ensure that all manufacturing processes for these materials occur in the United States. A manufacturing process is any process that modifies the chemical content, physical shape, size or final finish of a product, beginning with the initial melding and mixing and continuing through the bending and coating stages. A manufactured steel or iron product is complete only when all grinding, drilling, welding, finishing and coating have been completed. If a domestic product is taken outside the United States for any process, it becomes foreign source material. When using steel and iron as a component of any manufactured product incorporated into the project (*e.g.*, concrete pipe, pre-stressed beams, corrugated steel pipe, etc.), these same provisions apply, except that the manufacturer may use minimal quantities of foreign steel and iron when the cost of such foreign materials does not exceed 0.1% of the compensation or $2,500, whichever is greater. These requirements are applicable to all steel and iron materials incorporated into the finished work, but are not applicable to steel and iron items that the Contractor uses but does not incorporate into the finished work. The Contractor shall provide a certification from the producer of steel or iron, or any product containing steel or iron as a component, stating that all steel or iron furnished or incorporated into the finished product was manufactured in the United States in accordance with the requirements of this provision. Such certification shall also include: (1) a statement that the product was produced entirely within the United States, or (2) a statement that the product was produced with the United States except for minimal quantities of foreign steel and iron and specify the actual value of the product. Each such certification shall be furnished to the AUTHORITY prior to incorporating the material into the project. When FHWA allows the use of foreign steel on a project, Contractor shall furnish invoices to document the costs of such material, and obtain the AUTHORITY'S written approval prior to incorporating the material into the project.

ATTACHMENT "G"

PERFORMANCE AND PAYMENT BOND

BY THIS BOND, WE, _____, Inc., as Principal and _____ a Corporation, as Surety, are bound to the Solid Waste Authority of Palm Beach County, hereinafter referred to as "Authority", in the sum of _____ **Dollars (up to $10,000,000),** for payment of which we bind ourselves, our heirs, personal representatives, successors, and assigns, jointly and severally.

THE CONDITION OF THIS BOND is that if Principal:

1. Performs the Agreement dated _____, 20_____ between Principal and Authority for Proposal of Hurricane/Disaster Debris Removal, Reduction and Disposal, **Agreement No. 22-201,** the Agreement being made a part of this bond by reference, in the time and in the manner prescribed in the Agreement, and;

2. Promptly makes payment to all claimants, as defined in Section 255.05(1), Florida Statutes, supplying Principal with labor, materials and supplies, used directly or indirectly by Principal in the prosecution of the work provided for in the Agreement, and;

3. Pays Authority all loss, damages, expenses, costs, and attorney's fees, including appellate proceedings, that Authority sustains because of a default by Principal under the Agreement, and;

4. Performs the guarantee of all work and materials furnished under the Agreement for the time specified in the Agreement, and;

5. At completion of all work covered by Agreement and Final Payment by Authority to Principal then Principal will replace this Performance and Payment Bond with a Proposal Bond, in the amount of 5% of this Performance and Payment Bond, to be held by the Authority as a guarantee that Principal will provide to the Authority a Performance and Payment Bond in the amount of up to $10,000,000 on the occasion of a subsequent Task Order in accordance with the above referenced Agreement;

then this bond is void; otherwise it remains in full force.

Surety shall be responsible for any and all liquidated damages imposed by the Authority for the referenced Agreement.

Any changes in or under the Agreement Documents and compliance or noncompliance with any formalities connected with the Agreement or the changes does not affect Surety's obligation under this bond. Any increase in the total Agreement amount as authorized by the Authority shall accordingly increase the Surety's obligation by the same dollar amount of said increase. CONTRACTOR shall be responsible for notification to Surety of all such changes.

See subsection (2) of Section 255.05, Florida Statutes as amended for the notice and time limitations for claimants.

Signed and sealed this ____ day of _____, 20____.

PRINCIPAL:_____

By: _____
Signature

WITNESS:

Name: _____

1. _____

Title: _____

2. _____

Address: _____

_____

Telephone: _____

SURETY: _____

By: _____
Signature

WITNESS:

Name: _____

1. _____

Title: _____

2. _____

Address: _____

_____

Telephone: _____

NOTE: Date of Bond must not be prior to date of Agreement. If CONTRACTOR is a Partnership, all partners must execute bond.

IMPORTANT: Surety companies executing bonds **must** appear and remain on the Treasury Department's most current list (Circular 570 as amended) during construction, guarantee and warranty periods, and be authorized to transact business in the State of Florida, and be pre-approved by the Authority.

YOUR PARTNER FOR
SOLID WASTE SOLUTIONS

REQUEST FOR PROPOSAL

FOR

HURRICANE/DISASTER DEBRIS REMOVAL, REDUCTION AND DISPOSAL

RFP NO. 22-201/DL

JANUARY 2022

SOLID WASTE AUTHORITY OF PALM BEACH COUNTY
7501 NORTH JOG ROAD
WEST PALM BEACH, FLORIDA 33412
(561) 640-4000

TABLE OF CONTENTS

PART I

GENERAL INFORMATION

1. Purpose....1
2. Pre-Proposal Conference....1
3. Background....1
4. Evaluation Process....1
5. Procurement Schedule....2
6. Proposal Submission and Withdrawal....2
7. Communication Protocol....2
8. Addenda....2
9. Rights of the Authority....3
10. Proposal Preparation Costs....3
11. Bond Requirements....4
12. Interpretations....4
13. Non-Collusion Affidavit....4
14. Public Entity Crimes....4
15. Public Records Act / Information Disclosure to Third Parties....4
16. Posting of Recommendation for Award....5
17. Insurance....5
18. Cone of Silence....5
19. Agreements with other Governmental Entities....7
20. Scrutinized Companies....7
21. Inspector General....7
22. Commercial Non-Discrimination Policy....8
23. Third Party Beneficiary Disclaimer....9
24. E-Verify – Employment Eligibility....9
25. Equal Business Opportunity Program....9

PART II

STATEMENT OF WORK

2.1. Project Description and Requirements....10
2.2. Introduction....10
2.3. Planning Standard for Debris Removal and Disposal....11
2.4. Debris Management....11
2.5 Scope of Work/Overview....13
2.6 Debris Removal and Disposal Operations....15
2.7 Temporary Debris Management Sites (TDMS) Operations....21
2.8. Processing, Loading and Hauling Material....24
2.9 Miscellaneous Requirements....24
2.10 Performance of Contractor....26

PART III

PROPOSAL SUBMISSION REQUIREMENTS

3.1. Proposal Submission Requirements and Format....27
3.2. Content....27

PART IV

PROPOSAL EVALUATION AND AWARD

4.1. General 31
4.2. Evaluation Criteria 31
4.3. Evaluation Method 31
4.4. Award 33

PART V

PROPOSAL FORMS

1. Proposal Form 1 – Transmittal Letter 34
2. Proposal Form 2 – Proposal Bond 37
3. Proposal Form 3 – Price Proposal 39
4. Proposal Form 4 – Non-Collusion Affidavit 42
5. Proposal Form 5 – Drug-Free Workplace 43
6. Proposal Form 6 – PROPOSER'S Qualification Statement 44
7. Proposal Form 7 – Scrutinized Certification List 49

PART VI

ATTACHMENTS

Attachment A – Sample Contract Agreement
Attachment B – Task Order Disaster Debris Management
Attachment C – Pre-Approved Temporary Debris Management Sites Map
Attachment D – Public Assistance Program and Policy Guide
Attachment E – Mobilization Schedule
Attachment F – FHWA Form 1273
Attachment G – Buy America Requirements
Attachment H – Performance and Payment Bond

PART I
GENERAL INFORMATION

1. PURPOSE:

A. The purpose of this Request for Proposal (RFP) is to solicit formal written Proposals from experienced and qualified individuals, corporations, partnerships and other legal entities (PROPOSER) to perform Hurricane/Disaster Debris Removal, Reduction, and Disposal Services for the Solid Waste Authority of Palm Beach County (AUTHORITY). The AUTHORITY envisions the need for four (4) CONTRACTORS to carry out the debris removal and disposal work throughout Palm Beach County.

B. The contract will be for an initial three (3) year term with the option for an additional three (3) year renewal upon review and approval by the AUTHORITY.

2. PRE-PROPOSAL CONFERENCE:

A. A Virtual Mandatory Pre-Proposal Conference will be held on **WEDNESDAY, FEBRUARY 2, 2022, at 10:00am,** open to all interested parties at which time the AUTHORITY staff shall be present to answer questions and explain the intent of the RFP documents.

B. Any conclusions reached at this conference which amend the RFP documents, will be issued in the form of a written Addendum.

3. BACKGROUND:

A. The AUTHORITY is a Dependent Special District created by the Florida State Legislature pursuant to Chapter 2001-331, laws of Florida, known as the Palm Beach County Solid Waste Act. The AUTHORITY is governed by the seven (7) elected County Commissioners of Palm Beach County, Florida. The governing board members are elected for terms as determined by the Solid Waste Act.

B. The AUTHORITY is the governmental agency responsible for providing an economical and environmentally conscious integrated Solid Waste Management System for Palm Beach County, Florida. With approximately 400 employees, the AUTHORITY provides solid waste disposal and recycling services and programs to the County's 1.5 million residents and businesses. The AUTHORITY also provides solid waste and recycling collection services to the residents and businesses in unincorporated Palm Beach County through private haulers under exclusive franchise agreements.

C. The AUTHORITY has built an award-winning integrated system of facilities that combines recycling, renewable energy and landfilling to effectively manage the county's waste. The AUTHORITY's system includes two waste-to-energy facilities, landfills, a recovered materials processing facility, a biosolids processing facility, seven (7) home chemical collection facilities and a network of six (6) transfer stations.

4. EVALUATION PROCESS:

The evaluation process will be conducted by the Evaluation Committee in accordance with, but not limited to, the methods and criteria described in *Part IV – Proposal Evaluation and Award*.

5. PROCUREMENT SCHEDULE:

A summary schedule of the major activities associated with the AUTHORITY'S procurement process for this Project is presented in *Table 1 – Procurement Schedule*. The AUTHORITY, at its sole and unfettered discretion, may modify the schedule as it deems appropriate. The AUTHORITY will notify of any changes in association with submittal dates by written Addenda in accordance with *Part I, Section 8 – Addenda*.

Table 1 - Procurement Schedule

NO.	ACTIVITY	DATE
1	Issue RFP	January 14, 2022
2	Mandatory Pre-Proposal Meeting	February 2, 2022
3	Last Date for Authority to Receive Questions on RFP	February 7, 2022
4	Last Date for Authority to Issue Addendum in Response to Questions	February 9, 2022
5	Proposal Submission Due Date	February 18, 2022
6	Evaluation Committee Meeting, *tentative date*	February 28, 2022

6. PROPOSAL SUBMISSION and WITHDRAWAL:

A. The AUTHORITY uses to the Negometrix e-Procurement system, a 100% digital method of accessing and responding to solicitations (Negometrix). Therefore, PROPOSERS must submit their proposal via Negometrix. The AUTHORITY must receive all Proposals **no later than 2:00 P.M.,** Eastern Time, on the date established in *Part I, Section 5 – Procurement Schedule, of this RFP.*

B. The AUTHORITY cautions those submitting Proposals to ensure the accuracy of the document uploads to Negometrix.

C. The PROPOSER may withdraw their Proposal by notifying the AUTHORITY'S Purchasing Services office in writing at any time prior to the time set for the Proposals receipt deadline. PROPOSERS may withdraw their Proposals in person or through an authorized representative. Proposals, once opened, become the property of the AUTHORITY and will not be returned to the PROPOSERS.

7. COMMUNICATION PROTOCOL:

All questions and communications concerning this procurement process must be directed to Diane LeRay, CPPO, CPPB, Procurement Manager. All requests for clarifications or additional information **must be submitted in writing via electronic mail to dleray@swa.org or through Negometrix. All questions shall be submitted no later than the date specified in *Part 1, Section 5 – Procurement Schedule*** of this RFP. The AUTHORITY will record its responses to questions, if any, and address them in the form of a written Addendum to this RFP.

8. ADDENDA:

A. Should revisions to the RFP become necessary, the AUTHORITY will issue written Addenda. All Addenda must be acknowledged. This Acknowledgement must be included in Proposal Form 1 – Transmittal Letter. PROPOSER'S submittal may be rejected as non-responsive if PROPOSER has failed to submit Proposal without Addenda Acknowledgement. ***The AUTHORITY will issue all addenda through Negometrix.***

B. All PROPOSERS should contact the AUTHORITY no more than five (5) calendar days before the due date for submitting Proposals to ascertain whether any Addenda have been issued. Failure of the PROPOSER to

make this inquiry could result in its Proposal being non-responsive in the event addenda were issued and not acknowledged by the PROPOSER in their submittal.

C. No Addenda will be issued later than five (5) calendar days prior to the due date for receipt of Proposals except an Addendum withdrawing the RFP or one that includes postponement of the date for receipt of Proposals.

9. RIGHTS OF THE AUTHORITY:

This RFP constitutes an invitation for submission of Proposals to the AUTHORITY. This RFP does not obligate the AUTHORITY to procure or contract for any of the scopes of services set forth in this RFP. The AUTHORITY reserves and holds at its sole and unfettered discretion, various rights and options under Florida law, including without limitation, the following:

- To prepare and issue addenda to the RFP that may expand, restrict, or cancel any portion or all work described in the RFP without obligation to commence a new procurement process or issue a modified or amended RFP;
- To receive questions from potential PROPOSERS and to provide such answers in writing as it deems appropriate;
- To waive any informalities, technicalities or irregularities in the Proposals submitted;
- To reject any and all Proposal submissions;
- To change the date for receipt of Proposals or any deadlines and dates specified in the RFP;
- To change the procurement and/or selection process prior to receipt of Proposals;
- To conduct investigations with respect to the information provided by each PROPOSER and to request additional information (either in writing or in presentations and interviews) to support such PROPOSER'S responses and submittals;
- To visit facilities referenced in the PROPOSER'S submittal at any time or times during the procurement process;
- To seek clarification of Proposals from the PROPOSERS either in writing or in presentations and interviews, and;
- To cancel the RFP with or without the substitution of another RFP.

10. PROPOSAL PREPARATION COSTS:

The AUTHORITY accepts no liability for costs and expenses incurred by the PROPOSER in preparation and submission of Proposals and responses to clarifications from the AUTHORITY, potential site visits and interviews, negotiations, future RFP or any other work performed in connection with the Proposal. Each PROPOSER that enters into the procurement process shall prepare the required materials and submittals at its own expense and with the express understanding that they cannot make any claims whatsoever for reimbursement from the AUTHORITY for the costs and expenses associated with the process. PROPOSER should prepare their submittal providing a straightforward and concise description of the PROPOSER'S ability to meet the requirements of the RFP. Unnecessarily elaborate brochures, artwork, expensive paper, bindings, visual and other presentation materials, beyond that sufficient to present a complete and effective response to this RFP is not desired.

11. BOND REQUIREMENTS:

A. PROPOSER shall submit a completed Proposal Form 2 – Proposal Bond (same as a Bid Bond) in the amount of five hundred thousand dollars ($500,000). Unsuccessful PROPOSER'S Proposal Bond will be returned upon execution of an Agreement with the successful PROPOSER. **Proposal Form 2 – Proposal Bond shall also be accompanied by written Irrevocable Letter of Commitment** from an A- or better rated Surety Company licensed to do business in the State of Florida to provide a ten-million-dollar ($10,000,000) Performance and Payment Bond on the AUTHORITY'S form (Attachment H) upon issuance of first Task Order.

B. The AUTHORITY requires that the Proposal Bond of PROPOSER that is selected be in effect for the entire term of the Agreement and also that the Irrevocable Letter of Commitment to provide the Performance and Payment Bond also be in effect for the entire term of the Agreement until a debris generating event occurs and the successful PROPOSER is called to active duty. At the start of any and all active-duty periods the Proposal Bond will be returned to the successful PROPOSER(s) in exchange for the Performance and Payment Bond which will need to be in effect for the duration of the active duty period. Under no circumstances shall the successful PROPOSER start work until he/she has supplied an acceptable Performance and Payment Bond. If the successful PROPOSER fails to supply an acceptable Performance and Payment Bond, as specified in this RFP, the AUTHORITY shall be entitled to retain the Proposal Bond to rectify the PROPOSER'S unacceptable performance.

12. INTERPRETATIONS:

A. The AUTHORITY will not be bound by or responsible for any explanation or interpretation of the RFP documents other than those given in written addenda. In no event shall PROPOSERS rely on any oral statement by the AUTHORITY, its staff, agents, advisors, or consultants.

B. Any PROPOSER that submits in its Proposal to the AUTHORITY any information which is determined to be substantially inaccurate, misleading, exaggerated, or incorrect, may be disqualified from consideration.

13. NON – COLLUSION AFFIDAVIT:

The PROPOSER is required to submit Proposal Form 4 – Non-Collusion Affidavit stipulating Agreement to the following: "PROPOSER certifies that its Proposal is made without previous understanding, Agreement, or connection with any person, firm, or corporation making a Proposal for the same item(s) and is in all respects fair, without outside control, collusion, fraud, or otherwise illegal action".

14. PUBLIC ENTITY CRIMES:

Pursuant to Section 287.133(2)(a), as amended: A person or affiliate who has been placed on the convicted vendor list following a conviction for a public entity crime may not submit a bid on a contract to provide any goods or services to a public entity, may not submit a bid on a contract with a public entity for the construction or repair of a public building or public work, may not submit bids on leases of real property to a public entity, may not be awarded or perform work as a contractor, provider supplier, subcontractor, or consultant under a contract with any public entity, and may not transact business with any public entity in excess of the threshold amount provided in Section 287.017 for CATEGORY TWO for a period of thirty-six (36) months from the date of being placed on the convicted vendor list.

15. PUBLIC RECORDS ACT/INFORMATION DISCLOSURE TO THIRD PARTIES:

A. Sealed bids, proposals, SOQs, or replies received by the AUTHORITY pursuant to a competitive solicitation are exempt from s. 119.07(1) and s.24(a), Article I of the State Constitution until such time as the AUTHORITY provides notice of an intended decision or until thirty (30) days after opening the bids,

proposals, SOQs, or final replies, whichever is earlier. As such, the AUTHORITY shall not in any way be liable or responsible for the proper disclosure or result of the proper disclosure of any submissions or portions thereof submitted in response to the RFP.

B. The law provides for certain exemptions from disclosure. If the PROPOSER believes that some information contained in their Proposals is exempt from disclosure, the PROPOSER is instructed to label such information as specifying the exact section of the public records, or other Florida or Federal law that justifies nondisclosure, and request in writing the AUTHORITY keep such information confidential and free from disclosure. The AUTHORITY reserves the right to make any final determination of the applicability of the public records or other Florida or Federal law. Prior to releasing any information, the AUTHORITY will inform the PROPOSER and allow the PROPOSER to seek an injunction prohibiting the AUTHORITY from releasing the information. Each PROPOSER agrees that the AUTHORITY may reveal any confidential and exempt materials to designated AUTHORITY staff and Palm Beach County officials involved in the evaluation process, and to any outside consultant or third parties who serve on the Evaluation Committee or who are hired by the AUTHORITY to assist in the evaluation process.

C. Furthermore, each PROPOSER agrees to indemnify and hold harmless the AUTHORITY and each of their officers, employees, and agents from all costs, damages, and expenses incurred in connection with refusing to disclose any material, which the PROPOSER has designated as confidential and exempt.

D. Oral presentations, meetings where PROPOSER(S) is/are answering questions, negotiations, and AUTHORITY meetings to discuss negotiation strategy are exempt from public access in accordance with Sections 286.0113(2), Florida Statutes.

16. POSTING OF RECOMMENDATION FOR AWARD:

A. Recommendation for Award will be posted on the date of the Evaluation Committee meeting for a period of five (5) calendar days. Failure to file a protest to the Director of Purchasing Services within the time prescribed, as more fully detailed in the AUTHORITY'S Purchasing Manual, Section 10, shall constitute a waiver of protest proceedings.

B. It is the PROPOSER'S sole responsibility to ascertain the time and date of posting of the Recommendation for Award. This may be accomplished by telephone, fax, e-mail, or other means deemed timely by the PROPOSER.

C. It is understood by the PROPOSER that the Selection/Evaluation Committee makes only a recommendation which does not constitute the actual award itself. The actual award will be made by the SWA Board at a duly noticed public meeting.

D. Nothing contained in this Section shall limit or divest the SWA Board of its authority pursuant to its internal policies, AUTHORITY'S Purchasing Manual, the Special Act or general law.

17. INSURANCE:

The awarded PROPOSER(S) shall maintain insurance coverage reflecting the minimum amounts and conditions specified in the attached Sample Agreement, Attachment A. In the event the PROPOSER(S) is a governmental entity or a self-insured organization, different insurance requirements may apply. Misrepresentation of any material fact, whether intentional or not, regarding the PROPOSER(S) insurance coverage, policies or capabilities may be grounds for rejection of the proposal(s) and rescission of any ensuing agreement(s).

18. CONE OF SILENCE:

18.1 Cone of silence means a prohibition on any communication, written or oral, regarding a particular

request for proposal, request for qualification, bid, or any other competitive solicitation between:

(a) Any person, recognized legal entity, or either of their respective representative(s) seeking an award from such competitive solicitation; and
(b) any person who is a member of a selection or evaluation committee or panel whose purpose is to make selections, recommendations or evaluations in connection with a competitive selection process; and
(c) any employee of the department from which the contract solicitation originated and for whose primary purpose it will serve, any employee that is a Chief of the Solid Waste Authority of Palm Beach County regardless of the originating department; and
(d) Notwithstanding the above, any person, legal entity, or their respective representative(s), may contact any member(s) of the Authority's Governing Board, the Executive Director, Purchasing Director or Procurement Manager, however, any such communication shall only be by written correspondence, and in all cases the Purchasing Director shall be copied. Any oral communications to any of these persons(s) listed in this subsection regarding a particular competitive solicitation is strictly prohibited.

18.2 For the purposes of this section, a person or legal entity's representative shall include any person or group of persons acting on behalf of that person or legal entity, including but not limited to an employee, partner, officer, director, consultant, lobbyist, or any actual or potential subcontractor or consultant of the person or legal entity.

18.3 The Cone of Silence shall be in effect as of the deadline to submit the proposal, bid, or other response to a competitive solicitation. Each request for proposal, request for qualification, bid, or any other competitive solicitation shall provide notice of the Cone of Silence requirements and refer to this policy.

18.4 The Cone of Silence shall remain in effect for all person(s), legal entity, or their respective representative(s) submitting a response to a competitive solicitation until such time as the provisions of subsection 17.7 are satisfied, even if the person withdraws his/her submittal from the competitive process, or is otherwise eliminated from consideration consistent with the procedures of the competitive process.

18.5 The provisions of this policy shall not apply to oral communications at any proceeding, including pre-bid conferences, oral presentations before selection committees, contract negotiations during any meeting, presentations made to the board, and protest hearings. Further, the Cone of Silence shall not apply to contract negotiations between any employee and the intended awardees, or any dispute resolution process following the filing of a protest between the person filing the protest and any employee.

18.6 The Cone of Silence shall not apply to any purchase made in an amount less than the competitive bid threshold set forth in the Authority Purchasing manual.

18.7 The Cone of Silence shall terminate at the time the Board, or Authority staff, if authorized to act on behalf of the Board, awards or approves a contract, rejects all bids or responses, or otherwise takes action which ends the solicitation process.

18.8 The Board, by means of action taken at any properly noticed Governing Board meeting, may invoke the Cone of Silence earlier than the times specified in this section, for any procurement.

18.9 Any and all questions regarding the individuals who may or may not be covered under the Cone of Silence should be directed to the Purchasing Director or designee.

19. AGREEMENTS WITH OTHER GOVERNMENTAL ENTITIES:

All PROPOSERS submitting a response to this RFP agree that such response also constitutes a response to all State and local government agencies of the State of Florida under the same terms and conditions, for the same prices and for the same effective period as specified in this RFP, should the successful PROPOSER deem it in the best interest of their business to do so. The Agreement(s) resulting from this RFP in no way restricts or interferes with any State or local government agencies of the State of Florida from re-solicitation for any or all items specified in this RFP.

20. SCRUTINIZED COMPANIES:

A. As provided in F.S. 287.135, by entering into this Contract or performing any work in furtherance hereof, the CONTRACTOR certifies that it, its affiliates, suppliers, subcontractors and consultants who will perform hereunder, have not been placed on the Scrutinized Companies With Activities in Sudan List or Scrutinized Companies With Activities in The Iran Petroleum Energy Sector List created pursuant to F.S. 215.473, or is engaged in business operations in Cuba or Syria.

   If the AUTHORITY determines, using credible information available to the public, that a false certification has been submitted by CONTRACTOR, this Contract may be terminated and a civil penalty equal to the greater of $2 million or twice the amount of this Contract shall be imposed, pursuant to F.S. 287.135. Said certification may be requested at the time of Contract renewal.

B. As provided in F.S. 287.135, by entering into this Contract or performing any work in furtherance hereof, the CONTRACTOR certifies that it, its affiliates, suppliers, subcontractors and consultants who will perform hereunder, have not been placed on the Scrutinized Companies that Boycott Israel List, or is engaged in a boycott of Israel, pursuant to F.S. 215.4725.

   If the AUTHORITY determines, using credible information available to the public, that a false certification has been submitted by CONTRACTOR, this Contract may be terminated and a civil penalty equal to the greater of $2 million or twice the amount of this Contract shall be imposed, pursuant to F.S. 287.135. Said certification may be requested at the time of Contract renewal.

21. INSPECTOR GENERAL:

Palm Beach County has established the Office of the Inspector General (OIG), Ordinance No. 2009-049 which is authorized and empowered to review past, present and proposed county contracts, transactions, accounts and records. The AUTHORITY has entered into an Interlocal Agreement (ILA) for Inspector General Services. This Agreement provides for the Inspector General to provide services to the AUTHORITY in accordance with the authority, functions and powers set out in the Palm Beach County Office of Inspector General Ordinance. All parties doing business with the AUTHORITY and receiving AUTHORITY funds shall fully cooperate with the Inspector General including providing access to records relating to this Agreement. The Inspector General has the power to subpoena witnesses, administer oaths, require the production of records, and audit, investigate, monitor, and inspect the activities of the CONSULTANT, its officers, agents, employees, and lobbyists in order to ensure compliance with contract specifications and detect corruption and fraud. Failure to cooperate with the Inspector General or interference with or impeding any investigation shall be in violation of Ordinance 2009-049, and punished pursuant to Section 125.69, Florida Statutes, in the same manner as a second-degree misdemeanor.

22. COMMERCIAL NON-DISCRIMINATION POLICY:

A. Statement of Policy

It is the policy of the Authority not to enter into a contract or to be engaged in a business relationship with any business entity that has discriminated in the solicitation, selection, hiring or commercial treatment of vendors, suppliers, subcontractors or commercial customers on the basis of race, color, national origin, religion, ancestry, sex, age, marital status, familial status, sexual orientation, gender identity or expression, disability, or genetic information, or on the basis of any otherwise unlawful use of characteristics regarding the vendor's, supplier's or commercial customer's employees or owners; provided that nothing in this policy shall be construed to prohibit or limit otherwise lawful efforts to remedy the effects of discrimination that have occurred or are occurring in the relevant marketplace for Palm Beach County.

B. Policy Implementation

The EBO Office shall implement this policy by periodically conducting outreach and by distributing educational materials to the Authority's contracting and vendor community and related trade associations to advise such contractors, vendors and prospective respondents of this policy and the procedures to be followed in submitting complaints alleging violations of this policy. In addition, the Executive Director, the Office of the Chief Financial Officer, the Director of Purchasing, and the Office of the General Counsel shall ensure that the following commercial nondiscrimination clause language is set forth in, and incorporated into, all the Authority contracts that result from formal solicitations:

Every contract and subcontract shall contain a nondiscrimination clause that reads as follows:

"As a condition of entering into this agreement, the company represents and warrants that it will comply with the Authority's Commercial Nondiscrimination Policy as described under Section 6.3 of the Authority's Purchasing Manual. As part of such compliance, the company shall not discriminate on the basis of race, color, national origin, religion, ancestry, sex, age, marital status, familial status, sexual orientation, gender identity or expression, disability, or genetic information in the solicitation, selection, hiring or commercial treatment of subcontractors, vendors, suppliers, or commercial customers, nor shall the company retaliate against any person for reporting instances of such discrimination. The company understands and agrees that a material violation of this clause shall be considered a material breach of this agreement and may result in termination of this agreement, disqualification or debarment of the company from participating in Authority contracts, or other sanctions. This clause is not enforceable by or for the benefit of, and creates no obligation to, any third party."

All Formal Solicitations issued for Authority contracts shall include the following certification to be completed by the Respondent:

"The undersigned Respondent hereby certifies and agrees that the following information is correct:

In preparing its response on this project, the Respondent has considered all proposals submitted from qualified, potential Subcontractors and suppliers, and has not engaged in "discrimination" as defined in the Authority's Commercial Nondiscrimination Policy as set forth in Section 6.3 of its Purchasing Manual, to wit: discrimination in the solicitation, selection or commercial treatment of any Subcontractor, vendor, supplier or commercial customer on the basis of race, color, national origin, religion, ancestry, sex, age, marital status, familial status, sexual orientation, gender identity or expression, disability, or genetic information, or on the basis of any otherwise unlawful use of characteristics regarding the vendor's, supplier's or commercial customer's employees or owners; provided that nothing in this policy shall be construed to prohibit or limit otherwise lawful efforts to remedy the effects of discrimination that have occurred or are occurring in SWA's relevant marketplace. Without limiting the foregoing, "discrimination"

also includes retaliating against any person or other entity for reporting any incident of "discrimination." Without limiting any other provision of the solicitation for responses on this project, it is understood and agreed that, if this certification is false, such false certification will constitute grounds for the Authority to reject the response submitted by the Respondent on this project, and to terminate any contract awarded based on the response. As part of its response, the Respondent shall provide to the Authority a list of all instances within the immediate past four (4) years where there has been a final adjudicated determination in a legal or administrative proceeding in the State of Florida that the Respondent discriminated against its Subcontractors, vendors, suppliers or commercial customers, and a description of the status or resolution of that complaint, including any remedial action taken. As a condition of submitting a response to the Authority, the Respondent agrees to comply with the Authority's Commercial Nondiscrimination Policy as described under its Purchasing Manual – Economic Inclusion Policy and Procedures, Section 6.3.

23. THIRD PARTY BENEFICIARY DISCLAIMER:

It is not the intention of these RFP documents to create third party beneficiary status in any person or entity that is not a direct party to the contract awarded as a result of being the successful Proposer, and no language in these RFP documents or the contract awarded pursuant to this RFP should be construed or interpreted as creating a third-party beneficiary.

24. E-VERIFY – EMPLOYMENT ELIGIBILITY:

PROPOSER warrants and represents that it is in compliance with Section 448.095, Florida Statutes, as may be amended. No later than January 1, 2021, PROPOSER shall (1) register with and use the E-Verify System (E-Verify.gov) to electronically verify the employment eligibility of all newly hired workers; and (2) verify that all of the PROPOSER's contractors/consultants and subcontractors/subconsultants performing any duties and obligations under the resultant agreement are registered with and use the E-Verify System to electronically verify the employment eligibility of all newly hired workers. AUTHORITY shall terminate the resultant agreement if it has a good faith belief that the PROPOSER has knowingly violated Section 448.09(1), Florida Statutes as may be amended.

25. EQUAL BUSINESS OPPORTUNITY PROGRAM:

A. The Governing Board of the AUTHORITY has implemented the Economic Inclusion Policy and Procedures administered by the Equal Business Opportunity (EBO) Office to ensure that all segments of its business population, including, but not limited to small, local, minority, and women-owned businesses, have an equitable opportunity to participate in the AUTHORITY'S procurement process. Refer to Section 6.1 through 6.4 of the AUTHORITY's Purchasing Manual. The AUTHORITY's Purchasing Manual is available at https://swa.org/602/PURCHASING-MANUAL. It is the intention that the PROPOSER review and understand these provisions. In addition, program tools and solicitation incentives are hereby referred to as the Affirmative Procurement Initiatives (API).

B. Each solicitation will be evaluated to determine the appropriate API to be applied, if any. The API, if applicable, will be outlined in detail in Part III "Proposal Submission Requirements" located herein.

PART II
STATEMENT OF WORK

2.1. PROJECT DESCRIPTION AND REQUIREMENTS:

A. The AUTHORITY seeks experienced firms to remove and lawfully dispose of disaster-generated debris (other than hazardous materials and household putrescible garbage) from public property and public rights-of-way, and to setup and operate Temporary Debris Management Site(s) (TDMS) in Palm Beach County, Florida, immediately after a hurricane or other disaster.

B. The objective of this RFP and subsequent contracting activity is to secure the services of an experienced CONTRACTOR who is capable of efficiently removing large volumes of disaster-generated debris from a large area in a safe, timely and cost-effective manner and lawfully disposing of all debris. CONTRACTOR must be capable of assembling, directing, and managing a work force that can complete the debris management operations in 120 days or less. The duration of effort/completion dates of all tasks will be determined jointly by the AUTHORITY and CONTRACTOR. This determination will be set in writing in appropriate Task Order(s).

C. The CONTRACTOR shall perform all work in strict accordance with Federal Emergency Management Agency (FEMA) guidelines in order to maximize recovery of reimbursable expenses. This task shall include the provision of audit quality documentation as required by and acceptable to FEMA for all work accomplished.

D. The CONTRACTOR may be required, at the AUTHORITY'S discretion, to be under the direction of an agent of the AUTHORITY.

E. While intended to cover debris management needs in any major disaster scenario, the primary focus is on the threat of hurricane damage to Palm Beach County, Florida. The planning standards used for this project are based on the anticipated impacts of a named storm event or major flood impacting Palm Beach County, Florida. The AUTHORITY intends to enter into contingency Agreement(s) as further defined herein, to provide emergency debris removal and disposal services as required by the AUTHORITY.

2.2. INTRODUCTION:

A. The AUTHORITY'S disaster recovery planning includes considerations for removing and processing the volumes and types of debris expected to be generated by a major disaster such as a hurricane or major flood and includes procedures for disposing of that debris. The planning approach is formulated in part on the concept of strategic pre-positioning of plans and resources necessary for timely, safe, coordinated recovery operations, including removal of debris from public property and rights-of-way throughout Palm Beach County using a combination of county, municipal, and CONTRACTOR forces.

B. If activation is required, the AUTHORITY intends to activate contracts on an as-needed basis as solely determined by the AUTHORITY. The AUTHORITY intends to activate the CONTRACTORS in the order of final ranking as best meets the needs of the AUTHORITY. The AUTHORITY reserves the right in its sole and unfettered discretion, to assign/reassign any or all

CONTRACTORS at any time as may be deemed appropriate depending upon the circumstance(s), the event, or any other condition which may warrant such action.

C. The AUTHORITY envisions the need for four (4) CONTRACTORS to carry out the debris removal and disposal work throughout Palm Beach County. The CONTRACTOR must have the experience and capability to manage a major workforce with multiple subcontractors and to cover the expenses associated with a major recovery operation prior to the initial AUTHORITY payment and between subsequent payments, as well as the capacity to provide the necessary bonds and insurance. The CONTRACTOR must also have an established management team, an established network of resources to provide the necessary equipment and personnel, comprehensive debris removal, volume reduction operations plan, and demonstrable experience in major disaster recovery projects.

D. The Agreement(s) to be awarded under this RFP will be contingency Agreement(s) that will be activated only in the face of an emergency. As such, no compensation will accrue to the CONTRACTOR unless and until the Agreement is activated either in anticipation of a natural disaster or immediately after such disaster.

E. The CONTRACTOR who receives an Agreement for the work, will be required to participate in certain AUTHORITY directed disaster recovery training and/or exercises, 1 to 2 days each year, at no cost to the AUTHORITY.

F. The AUTHORITY does not guarantee a CONTRACTOR will be activated if awarded an Agreement.

2.3 PLANNING STANDARD FOR DEBRIS REMOVAL AND DISPOSAL:

The AUTHORITY'S goal is to complete the debris removal and disposal process in 120 days following the storm event. This assumes that the entire area of the county will be accessible within that period. Due to the low elevation and potential for flooding, some areas might not be accessible for several weeks after a major natural disaster. The CONTRACTOR must be aware that it might not be possible to initiate operations in all parts of the county simultaneously immediately after a storm.

2.4 DEBRIS MANAGEMENT:

A. Planning for debris management operations is a function of the AUTHORITY as a supporting agency to the Palm Beach County Department of Engineering and Public Works. The AUTHORITY'S Emergency Management Coordinator will direct the debris removal and disposal operations.

B. In addition to using AUTHORITY forces and equipment, the AUTHORITY intends to execute four (4) debris removal and disposal Agreements on a contingency basis for the purpose of having CONTRACTOR(S) immediately available and committed to assisting the AUTHORITY in the aftermath of a major disaster. Each CONTRACTOR holding a debris removal and disposal Agreement will serve as a General CONTRACTOR for the purpose of debris removal and disposal operations and will be able to use his/her own and subcontractor resources to meet the obligations of the Agreement. It is anticipated, but not required, that the CONTRACTOR will use both local and non-local subcontractors.

C. When a major disaster occurs or is imminent, the AUTHORITY intends to contact the highest two (2) or three (3) ranked CONTRACTORS holding debris removal and disposal Agreements to advise them of the AUTHORITY'S intent to activate the Agreement(s). Debris removal will generally be limited to debris in, upon, or brought to county residential private and public streets and roads, rights-of-way, municipal properties and facilities, and other public sites (this includes debris from customers assessed for residential solid waste and recycling collection services by the AUTHORITY). The CONTRACTOR will be responsible for determining the method and manner of debris removal and lawful disposal operations. Disposal of debris will be at AUTHORITY approved TDMS or landfill sites. The CONTRACTOR will be responsible for the lawful disposal of all debris and debris-reduction by-products generated at all TDMS.

D. When a major disaster occurs or is imminent, the AUTHORITY will initially send out an Alert to the selected CONTRACTOR(S). This Alert will serve to activate the lines of communication between the CONTRACTOR representatives and the AUTHORITY. Subsequently, the AUTHORITY will issue the first Task Order which will authorize the CONTRACTOR to send an Operations Manager to the AUTHORITY within 24 hours of receiving such Task Order, to begin planning for the operations and mobilizing the personnel and equipment as necessary to perform the stipulated work. This first Task Order will also direct the CONTRACTOR to execute the required Performance and Payment Bond. The CONTRACTOR should anticipate receiving this first Task Order 24 to 72 hours before projected landfall of a hurricane or major flood. Depending on the nature of the storm and circumstances, the AUTHORITY may activate more than one (1) CONTRACTOR. CONTRACTOR(S) will generally be activated in order of final ranking.

E. Specific task orders will be issued to select CONTRACTORS based on the best interest of Palm Beach County. The AUTHORITY reserves the right to assign work or task orders to various CONTRACTORS based on capability. The AUTHORITY does not guarantee a cradle to grave pricing arrangement but reserves the right to pick and choose CONTRACTORS based on ranking.

F. The general concept of debris removal operations includes multiple, scheduled passes of each site, location, or right-of-way. This will allow residents to return to their properties and bring debris to the private and public right-of-way as recovery progresses. The AUTHORITY will prescribe the specific schedule to be used after ascertaining the scope and nature of the disaster's impacts.

G. The AUTHORITY will make every effort to identify strategically located public and private TDMS throughout the county prior to a natural disaster. Depending upon the severity of the natural disaster, additional public and private TDMS will be identified as needed.

H. The CONTRACTOR will operate the public and private TDMS and only CONTRACTOR vehicles and others specifically authorized by the AUTHORITY will be allowed to use the sites. Only one (1) level of subcontractor will be allowed to operate the sites. There will be no multi-tiered subcontractors (sub of a sub) allowed to operate TDMS. The CONTRACTOR is responsible for all activity at TDMS operated by their subcontractor and must have an employee on site at all times to oversee daily operations. **The locations of both publicly and privately owned sites currently under consideration are shown on Attachment C.** Additional public and privately owned TDMS may become available as plans develop. The availability of both private and public TDMS may change during the term of the Agreement.

I. The AUTHORITY may also establish designated homeowner drop-off sites on a public right-a-way (PROW) for communities. The CONTRACTOR will be responsible for removing all eligible debris from those approved designated locations at the direction of the Emergency Management Coordinator or designee.

J. Curbside segregation of debris and disaster-generated or related wastes will be an element of the AUTHORITY'S disaster recovery program. The debris removal and disposal CONTRACTOR will be required to aid in the segregation and waste stream management processes. Any Household Hazardous Waste (HHW) encountered by the debris removal CONTRACTOR is to be set aside. HHW disposal will be the responsibility of the resident. The AUTHORITY will designate HHW drop-off locations.

K. The following items are considered HHW for the purpose of this Agreement:

1. Used Oil
2. Batteries
3. Paint
4. Aerosol spray cans
5. Pesticides
6. Antifreeze
7. Fluorescent light bulbs
8. Propane tanks (household size)

L. The CONTRACTOR will setup a lined containment area and separate any HHW inadvertently delivered to a TDMS.

M. Commercial and industrial hazardous waste such as chemicals, gas containers, transformers, and any other form of hazardous or toxic matter will be set aside for collection and disposal by a Hazardous Materials Removal and Disposal Contractor who will be selected by the AUTHORITY.

N. Putrescible residential garbage will be collected by AUTHORITY franchise waste haulers and is not to be collected or transported by CONTRACTOR forces. The AUTHORITY may enter into a separate emergency debris removal agreements with each franchise hauler to operate their dedicated self-loading collection equipment within their Service Area for FEMA eligible storm debris removal.

2.5 SCOPE OF WORK/OVERVIEW:

This section is divided into three (3) subsections:

2.5.1 Debris Removal and Disposal Operations from residential public and private streets, roads and rights-of-way and delivered to a TDMS designated by the Authority.

2.5.2 TDMS Operations which includes daily operations as well as reclamation of the site to its pre-storm condition or as directed by the AUTHORITY Emergency Management Coordinator

2.5.3 Processing, Loading and Hauling Material from TDMS to final destination.

A. Specific work authorizations by the AUTHORITY will be through written Task Orders. Task Orders will define the job to be accomplished, location of job, timeframe for completion, rates to be used, etc. Any job with requirements or rates not covered by this Proposal will be negotiated. The AUTHORITY reserves the right to extend operations on a weekly basis. Task Orders will be executed bilaterally. Performance will be by the metrics established in the Task Order(s). After 1/3 and again after 2/3 of the stipulated number of days of work in the Task Order have elapsed, the CONTRACTOR(S) shall provide written progress report to the AUTHORITY for review and acceptance. The AUTHORITY shall have the right to correct for CONTRACTOR'S default or underperformance by any means it deems in its best interest at the CONTRACTOR'S expense.

B. The CONTRACTOR shall commence mobilization immediately upon receipt of the mobilization Task Order meeting the following progress patterns: 48 hours- collection activity within assigned Collection Service Area. Within ten (10) calendar days CONTRACTOR shall have 100% of all necessary equipment operating within all Collection Service Areas. This represents a minimum response schedule and does not restrict an earlier response. Subsequently, the AUTHORITY may issue additional Task Orders to define more precisely the work to be accomplished or to authorize additional work. The CONTRACTOR shall perform in accordance with each Task Order in all designated Collection Service Areas established by the AUTHORITY. Each Task Order will be uniquely and sequentially numbered.

C. The CONTRACTOR is authorized to collect debris during daylight hours, seven (7) days per week. Any deviations from this schedule will require AUTHORITY approval.

D. The CONTRACTOR must be duly licensed to perform the work in accordance with the State of Florida statutory requirements. The CONTRACTOR shall obtain all permits necessary to complete the work. The CONTRACTOR shall be responsible for determining what permits are necessary to perform under the Agreement. Copies of all permits shall be submitted to the AUTHORITY's Director, Customer Information Services prior to issuance of the first Task Order.

E. The quantity of work required to complete the Agreement resulted from this RFP is estimated. The actual effort required may be more or less than the estimated amount shown in the Proposal Form 3 – Price Proposal. Payment will be made at the unit rates proposed. The output will be verified by the AUTHORITY's Director, Customer Services in the daily operational report. Should hourly rates be used to pay for certain equipment other than preventative maintenance, not in excess of fifteen (15) minutes in a normal workday, will be paid at the regular hourly rate. Preventative maintenance or down time resulting from equipment failure, routine maintenance and fueling that exceeds fifteen (15) minutes will be considered unacceptable work and non-payment of that time will be rounded off to the half hour of all hours where delays occur. Preventative maintenance is defined as the usual field maintenance to keep equipment in operating condition without the use of extensive shop equipment. Fueling of equipment will be considered as part of preventative maintenance.

F. The CONTRACTOR shall be responsible for correcting any notices of violations issued as a result of the CONTRACTOR'S or any subcontractor's actions or operations during the performance of this Agreement. Corrections for any such violations shall be at no additional cost to the AUTHORITY.

G. The CONTRACTOR shall conduct the work so as not to interfere with the disaster response and recovery activities of federal, state or local governments or agencies, or of any public utilities or other private contractor.

H. The CONTRACTOR shall provide contact information for all key personnel to the AUTHORITY that shall include name, phone number, cellular phone number and email address. The CONTRACTOR and its agents shall respond in a timely manner to all AUTHORITY inquiries at all times.

2.6 DEBRIS REMOVAL AND DISPOSAL OPERATIONS

2.6.1 General:

A. The purpose of this section is to define the requirements for debris removal and disposal operations after any catastrophic disaster within Palm Beach County. The AUTHORITY may designate zones for collection and disposal locations for debris collected. CONTRACTORS will be tasked with a service area(s) for this specific work immediately after the activation of the Agreement.

B. For work performed on a Time and Materials basis, all hourly equipment rates shall include the cost of the maintenance, fuel, repairs, overhead, profit, insurance, and all other costs associated with the equipment including labor and operator.

2.6.2 Services:

A. The CONTRACTOR shall provide equipment, operators, and laborers for debris removal operations. The CONTRACTOR shall provide all labor and materials necessary to fully operate and maintain (including fuel, oil, grease, and repairs) all equipment under this Agreement.

B. All rates are to include the cost of protective clothing (to include hardhats and steel-toed boots), fringe benefits, hand tools, supervision, transportation, lodging, meals, and all other costs.

C. The work shall consist of clearing and removing disaster generated debris as directed by the AUTHORITY Emergency Management Coordinator. CONTRACTOR shall provide collection equipment the day following a natural disaster or as directed by the AUTHORITY and shall provide equipment sufficient to collect a minimum of 50,000 cubic yards of debris per day within ten (10) calendar days of collection commencement (Past AUTHORITY natural disaster cleanup records show that ten (10) days' following disaster, 95,000-126,000 cubic yards of debris collected per day). Failure to provide sufficient equipment necessary to collect required amount may result in the AUTHORITY entering into a separate agreement with another contractor for collection services.

2.6.2.1 Removal of Hazardous Leaning Trees and Hanging Limbs

a) Under this contract, work shall consist of all labor, equipment, fuel, and miscellaneous costs necessary to remove all hazardous trees twelve inches (12") or greater in diameter, measured three feet (3') from the base of the tree or chest height and hanging limbs two inches (2") or greater in diameter existing in private and public right-of-way. Further, debris generated from the removal of hazardous trees and hanging limbs two inches (2") or greater existing in private and public right-of-way will be placed at the public right-of-way for removal as vegetative debris. Hazardous leaning trees less than twelve inches (12") in diameter, measured three feet (3') from the base of the tree or at chest height, will be flush cut, and placed on the public right-of-way to be removed as vegetative debris. The AUTHORITY will not compensate the CONTRACTOR for leaning trees less than twelve inches (12") in diameter on a unit rate basis.

b) Removal and transportation of hazardous trees twelve inches (12") or greater in diameter and hanging limbs two inches (2") or greater in diameter existing in private and public right-of-way will be performed as identified by the AUTHORITY. All disaster specific eligibility guidelines regarding size and diameter of leaning trees will be communicated to the CONTRACTOR, in writing, by the AUTHORITY. In order for leaning or hazardous trees to be removed and eligible for reimbursement, the tree must satisfy a minimum of one (1) of the following requirements:

   i) The tree is leaning in excess of 30° degrees in a direction that poses an immediate threat to public health, welfare, and safety.
   ii) The tree is dead, twisted, or mangled as a direct result of the storm and a certified arborist can attest to the fact that the tree will die and potentially create a falling hazard to the public.

2.6.2.2 Removal of Hazardous Stumps

a) Under this contract, work shall consist of all labor, equipment, fuel, and miscellaneous costs necessary to remove all hazardous uprooted stumps 24 inches or greater in diameter, measured 24 inches from the base of the tree existing in private and public right-of-way. Further, debris generated from the removal of uprooted stumps existing in private and public right-of-way will be placed at the public right-of-way for removal as vegetative debris. Stumps measured 24 inches from the base of the tree and less than 24 inches in diameter will be considered normal vegetative debris and removed in accordance with 3.1.2. The AUTHORITY will not compensate hazardous stumps less than 24 inches in diameter on a unit rate basis and instead will be considered normal vegetative debris. The diameter of stumps less than 24 inches will be converted into a cubic yardage volume based on the published FEMA stump conversion table (In accordance with current FEMA public assistance guidelines) and removed under the terms and conditions of 2.6.2.

b) Removal and transportation of hazardous uprooted stumps existing in the private and public right-of-way and private property will be performed as identified by the AUTHORITY. All disaster specific eligibility guidelines regarding size and diameter of hazardous stumps will be communicated to the CONTRACTOR, in writing, by the AUTHORITY. In order for hazardous stumps to be removed and eligible for reimbursement, the stump must satisfy the following requirement:

(i) Over 50% of the tree crown is damaged or broken and heartwood is exposed.
(ii) Tree stumps that are not attached to the ground will be considered normal vegetative debris and subject to removal under the terms and conditions of 2.1. The cubic yard volume of the unattached stump will be based off of the diameter conversion using the published FEMA stump conversion table (In accordance with current FEMA public assistance guidelines).

The AUTHORITY or its representative will measure and certify all stumps before removal.

2.6.2.3 Collection of Storm Generated Residential Vegetation and Construction and Demolition Debris:

a) It is the AUTHORITY'S goal to ensure that Vegetation and Construction/Demolition debris remain separate task orders for the collection of Vegetation and Construction loads. Mixing of loads by the CONTRACTOR at the road right of way will not be tolerated.

Work may include:

(i) First pass to clear debris from emergency evacuation routes, access roads to critical facilities and all primary roadways.
(ii) Clearing debris from residential private and public road right of ways.
(iii) Loading the debris.
(iv) Hauling the debris to an approved AUTHORITY TDMS or an authorized private construction demolition debris recycling facility or landfill.
(v) Dumping the debris at the TDMS or direct haul to an Authority permitted approved private Construction and Demolition Debris (C&D) recycling facility or Authority authorized landfill.

b) Debris delivered to a TDMS, private C&D recycling facility or authorized landfill will be paid based on the per cubic yard price according to the Proposal Form 3 – Price Proposal.

2.6.2.4 Hourly Rate Clearing:

a) From 0-70 hours following a disaster CONTRACTOR, as designated by the AUTHORITY, shall provide the clearing services on an hourly rate that shall include the following:

(i) Clear debris from emergency evacuation routes, access roads to critical facilities, and primary roadways.
(ii) Perform emergency removal of debris if needed for life-saving measures.
(iii) Conduct daily briefings with debris managers and other officials to update progress and discuss issues.
(iv) Develop a traffic control plan along potential haul routes and at debris management and disposal sites.

b) The CONTRACTOR shall not move from one designated Collection Zone to another area without prior approval from the AUTHORITY's Director, Customer Information Services or designee. CONTRACTORS and/or subcontractors that move to a designated Collection Service Area without prior AUTHORITY approval may be terminated immediately. The AUTHORITY reserves the right to relocate CONTRACTOR to other Collection Service Areas based on need and ability to perform required work at an acceptable level. The AUTHORITY reserves the right to immediately terminate CONTRACTOR and any subcontractor who fails to provide service in strict accordance with guidelines set forth by FEMA and the AUTHORITY.

c) The AUTHORITY or designee shall forward all claims of damage to the CONTRACTOR daily. CONTRACTOR shall provide all contact information, including name, phone number, cellular phone number, fax number and email address, for personnel responsible for resolving all claims of damage. CONTRACTOR must respond to all claims of damage within 24 hours and resolve within ten (10) calendar days. Mailboxes must be repaired or replaced within two (2) calendar days. CONTRACTOR is responsible for all damage caused by his crew and/or subcontractors in the performance of debris removal.

d) In the event the CONTRACTOR fails to repair damages as a result of the Contractor's equipment failure or negligence within the time provided in this Agreement, the AUTHORITY or designee may arrange for the repairs and assess the CONTRACTOR for the cost of the repairs and any applicable administrative charges. Any disputes as to damage responsibility will be presented to the Director, Customer Information Services or designee for review. The decision of the Director, Customer Information Services or designee will be final.

2.6.3 Equipment:

A. All trucks and equipment must be in compliance with all applicable federal, state, and local rules and regulations. Trucks used to haul debris must be capable of rapidly dumping their load without the assistance of other equipment, be equipped with a tailgate that will effectively contain the debris during transport that will permit the trucks

to be filled to capacity. Cyclone fence may be used as temporary tailgates if they comply with the following specifications:

1. Fencing must be permanently attached to one side of the truck bed.
2. After loading, the fencing must be tied to the other side of the truck bed at two places with heavy gauge wire.
3. Fencing must extend to the bottom of the bed.
4. After loading, bottom of fencing shall be tight against the bed of the truck and secured at a minimum of two locations.
5. Solid iron metal bars must be secured to both sides of the fencing.
6. There shall be no hand loaded equipment allowed.

B. The AUTHORITY or designee shall complete certifications indicating the type of vehicle, make and model, license plate number, equipment number, and measured maximum volume, in cubic yards, of the load bed of each piece of equipment utilized to haul debris. The measured volume of each piece of equipment shall be calculated from actual internal physical measurement performed and certified by the CONTRACTOR. Maximum volumes may be rounded up to the nearest cubic yard. The reported measured maximum volume of any load bed shall be the same as shown on the placards affixed to each piece of equipment. The AUTHORITY reserves the right to re-measure trucks and trailers at any time to verify reported capacity. If a truck and/or trailer are re-measured and the yardage capacity is determined to be lower, the lower yardage volume will be retroactive to the initial load and total volume adjusted accordingly.

C. All trucks and trailers utilized in hauling debris shall be equipped with a tailgate that will permit the vehicle to be loaded to capacity and effectively contain the debris on the vehicle while hauling. If installed, all sideboard extensions must remain in place throughout the operation, or the vehicle must be re-measured and remarked. All extensions to the bed are subject to acceptance or rejection at the sole discretion of the AUTHORITY or designee.

D. Trucks or equipment designated for use under this Agreement shall not be used for any other work during working hours. The CONTRACTOR shall not solicit work from private citizens or others to be performed in the designated Collection Service Area during the period of this Agreement. Under no circumstance will the CONTRACTOR mix debris hauled for others with debris hauled under this Agreement. Failure to comply will result in no payment to CONTRACTOR and the operator and vehicle will be declared ineligible to provide any additional emergency debris collection services. Any and all unapproved changes to placard will result in no payment to CONTRACTOR and the operator and vehicle will be declared ineligible to perform any additional emergency debris collection services.

2.6.4 Securing Debris

The CONTRACTOR shall be responsible for properly and adequately securing debris on each piece of equipment utilized to haul debris. Prior to leaving the loading site, the CONTRACTOR shall ensure that each load is secure and trimmed so that no debris extends horizontally beyond the bed of the equipment in any direction. All loose debris shall be reasonably compacted during loading and secured during transport. Tarps or other

coverings shall be provided by the CONTRACTOR to prevent materials from falling or being blown from the bed. Loads not properly tarped or otherwise covered will not be allowed to dispose at any AUTHORITY approved TDMS which may result in non-payment to CONTRACTOR.

2.6.5 Equipment Signage

Prior to commencing operations, the AUTHORITY or designee shall affix to each piece of equipment, signs or markings indicating the Owner Operator's name and a unique equipment identification number. One sign shall be placed on each side of the equipment. For those trucks, trailers and other equipment intended to haul debris, the maximum volume, in cubic yards, of the load bed shall also be shown. Each operator shall keep AUTHORITY certification with them at all times. Placards must remain on both sides of equipment.

2.6.6 Other Considerations

A. The CONTRACTOR shall assign and provide an Operations Manager (OM) to the AUTHORITY TDMS to serve as the principal liaison between the AUTHORITY Director, Customer Services or designee and the CONTRACTOR'S forces. The assigned OM must be knowledgeable of all facets of the CONTRACTOR'S operations and have authority in writing to commit the CONTRACTOR. The OM shall be on call 24 hours per day, seven (7) days per week and shall have electronic linkage capability for transmitting and receiving relevant contractual information and make arrangements for onsite accommodations. This linkage shall provide immediate contact via cell phone, Fax machine, and have Internet capabilities. The OM will participate in daily meetings and disaster exercises, functioning as a source to provide essential element information. The OM will report to the AUTHORITY Director, Customer Services or designee. This position will not require constant presence; rather the OM will be required to be physically capable of responding to the AUTHORITY Emergency Management Coordinator within 30 minutes of notification.

B. The CONTRACTOR shall be responsible for control of pedestrian and vehicular traffic in the work area. At a minimum, one flag person should be posted at each approach to the work area.

C. The CONTRACTOR shall supervise and direct the work, using skilled labor and proper equipment for all tasks. Safety of the CONTRACTOR'S personnel and equipment is the responsibility of the CONTRACTOR. Additionally, the CONTRACTOR shall pay for all materials, personnel, taxes, and fees necessary to perform under the terms of this contract.

D. Payment for debris hauled will be based on the quantity of debris hauled in cubic yards. Debris hauled to a TDMS will require a validated load ticket. Drivers will be given an electronic load tickets at the loading site by an AUTHORITY loading site monitor. The quantity of debris hauled will be estimated in cubic yards at the TDMS by an AUTHORITY TDMS monitor. The estimated quantity will be recorded on the electronic load ticket. The AUTHORITY TDMS monitor will retain one copy of the paper load ticket and the driver will retain the remaining copies of the load ticket. Debris being hauled to

a permanent landfill will be paid based on cubic yards recorded on an approved electronic or paper load ticket. Payment will be made against the CONTRACTOR'S invoice once site monitor and CONTRACTOR load tickets and/or scale tickets match. Load tickets not properly completed and signed will not be paid.

2.7 TEMPORARY DEBRIS MANAGEMENT SITES (TDMS) OPERATIONS

2.7.1 General

A. The purpose of this section is to define the requirements for TDMS Operations after any catastrophic disaster within Palm Beach County.

B. The CONTRACTOR shall use only TDMS designated by the AUTHORITY Emergency Management Coordinator.

C. The TDMS foreman shall direct all vehicular traffic and load drop-off operations. Different types of debris shall be kept in separate piles at the TDMS. At a minimum, one flag person shall be posted at each TDMS for traffic control and to direct unmixed loads to proper location (by debris type) to be offloaded. CONTRACTOR shall be responsible for sorting and proper placement of all loads not dumped in appropriate location which results in mixing the once separated debris at no charge to the AUTHORITY.

D. The CONTRACTOR shall begin grinding vegetative debris within five (5) calendar days of TDMS opening date and removing mulch/wood chips within ten (10) calendar days of site opening date. It is very important your plan provides specific information for the final disposal destination location of the mulch / wood chips removed from the public or private TDMS. The CONTRACTOR shall begin removal of Construction and Demolition/mixed debris from TDMS to an approved final destination within five (5) days of site opening date.

2.7.2 TDMS Services

2.7.2.1 Site Setup/Preparation and Site Closeout/Restoration Site setup/preparation and site closeout/restoration shall be compensated on a time and materials basis in accordance with the hourly rates provided in the Proposal Form 3 – Price Proposal Site set-up/preparation/closeout/restoration includes: clearing, stripping, hauling, fill placement, constructing/deconstructing processing pads, limerock or crushed concrete access roads, seeding, and any other similar activity necessary to make the site usable for its intended purposes and to return the site to its original condition. Do not include any materials in calculating the hourly rates in the Proposal Form 3 - Price Proposal. Important- Phase I TDMS Reclamation is included in the 2.0 cubic yard price. Phase I Reclamation requires the contractor to remove all debris from the TDMS including small particles mixed with soil and grading the entire area. The only site closeout cost will be removal of road base material and seeding as approved by the Authority.

2.7.2.2 TDMS Operations and Material Processing

a. TDMS operations and material processing shall be compensated in accordance with the unit prices provided in the Proposal Form 3 - Price Proposal. The CONTRACTOR shall provide equipment, operators, and laborers for TDMS operations as specified by Task Order. Unit prices provided in the Proposal Form 3 - Price Proposal, shall include all labor and materials necessary to fully operate and maintain (including fuel, oil, grease, repairs, operator, mobilization, demobilization, overhead, profit, lodging and insurance) all equipment under this Agreement. Each Inspection Tower shall be equipped with two (2) portable toilets. Toilets shall be provided immediately upon completion of tower assembly. CONTRACTOR shall provide a water truck for the purpose of applying to site surface to minimize dust. The AUTHORITY shall provide a front-load garbage container and collection service of the container at each TDMS. CONTRACTOR shall be responsible for cleaning up all trash and litter generated on the site from daily operations and depositing into the container for collection. The entrance roadway and surrounding area within ½ mile of the site's entrance shall be cleaned daily by the CONTRACTOR. All pre-storm identified sites shall be opened by the CONTRACTOR within three (3) calendar days after receiving approval from the AUTHORITY to operate the TDMS. Failure to open sites with proper equipment and necessary personnel will result in liquidated damages of $10,000 per day. All rates shall include the cost of protective clothing (to include hardhats and steel-toed boots), fringe benefits, hand tools, supervision, transportation, lodging, meals, and any other costs. The work shall consist of managing the operations of a TDMS and performing debris reduction by air curtain incineration and/or grinding of storm generated debris as directed by the AUTHORITY Emergency Management Coordinator

b. The AUTHORITY plans to use two types of TDMS.

    1. Vegetative TDMS will be devoted to the reduction of clean woody debris by either burning or grinding. The AUTHORITY expects the material to be recycled and or beneficially re-used if processed by grinding. It is important to provide a detailed plan on how this material will be recycled or beneficially reused after grinding / reduction.

    2. Depending upon the size and type of devastation the AUTHORITY may require a separate Construction & Demolition (C&D) staging area, mixed debris staging area and a separate Household Hazardous Waste staging area. The AUTHORITY requests that PROPOSER implements recycling and or reduction programs to minimize the quantity of construction debris material to be land filled.

c. Material coming into the Vegetative or C&D TDMS will be measured and paid for by the cubic yard according to the Proposal Form 3 – Price Proposal. Material removed and transported from a C&D TDMS will be measured and paid by the cubic yard according to the Proposal Form 3 – Price Proposal.

d. Locations of all TDMS will be approved by the AUTHORITY. The AUTHORITY Emergency Management Coordinator must approve site improvements before work begins and any costs, other than those in the Proposal Form 3 – Price Proposal, that might have been negotiated under a Task Order shall be documented for payment.

e. Material processed at a TDMS by either grinding or burning will be measured using cubic yards from incoming load tickets. Material entering a TDMS will be deposited in manageable piles.

2.7.3 Reporting

The CONTRACTOR shall submit a report to the AUTHORITY Emergency Management Coordinator or designee by close of business each day of the term of the Task Order. Each report shall contain, at a minimum, the following information:

1. Contractor's Name
2. Contract Number
3. Daily and cumulative hours for each piece of equipment, *if appropriate*
4. Daily and cumulative hours for personnel, by position, *if appropriate*
5. Volumes of debris handled

Failure to provide audit quality information by 5:00 p.m. of the following day of operation will subject CONTRACTOR to non-payment in each instance at the sole discretion of the AUTHORITY.

2.7.4 Other Considerations

A. The CONTRACTOR shall supervise and direct the work, using skilled labor and proper equipment for all tasks. Safety of the Contractor's personnel and equipment is the responsibility of the CONTRACTOR. Additionally, the CONTRACTOR shall pay for all materials, personnel, taxes, and fees necessary to perform under the terms of this contract.

B. The CONTRACTOR shall be responsible for control of pedestrian and vehicular traffic in the work area. In the event a TDMS must be closed due to CONTRACTOR equipment or operational failures, CONTRACTOR shall be liable for liquidated damages in the amount of $25,000.00 per day for every day the site has to remain closed.

2.7.5 Debris Clearance (for access) from Right-of-Ways and Public Property

A. The AUTHORITY provides support to Palm Beach County Government for Debris Management, including the clearance (moving debris from the middle of the road, etc.) of debris from right-of- ways and public property. Palm Beach County intends to perform debris clearance for access with its own forces or under existing contractual Agreements between the County and local firms. However, in a significant disaster, these resources may be insufficient to perform the clearance activities in a timely manner.

B. This debris clearance is to be considered supplemental and optional service. It is anticipated that debris clearance activities would be conducted, if needed, on a time and material basis using the rates in the Proposal Form 3 – Price Proposal.

2.8 PROCESSING, LOADING AND HAULING MATERIAL:

CONTRACTOR shall provide all necessary labor, material and equipment to process, load and haul wood chips from TDMS in Palm Beach County to final destination for disposal. CONTRACTOR shall provide all necessary labor, material and equipment to load and haul construction and demolition debris and/or mixed debris from TDMS as directed by the AUTHORITY. The AUTHORITY reserves the right to contract with other firms to process, load and haul wood chips and construction and/or mixed debris to a final destination as may best meet the needs of the AUTHORITY. All wood chips, construction and/or mixed debris shall be disposed of in accordance with all Local, State of Florida and Federal guidelines.

CONTRACTOR will provide detailed listing to the AUTHORITY of the following:

1. Quantity (loads and cubic yards)
2. Owner information
3. Site where mulch / reduced yard waste material generated at TDMS is disposed, to include address/GPS location.
4. AUTHORITY will determine final private or public Construction/Demolition debris disposal/recycling facility.

2.9 MISCELLANEOUS REQUIREMENTS

2.9.1 TDMS Foreman

A. The TDMS foreman must be an employee of the CONTRACTOR and is responsible for management of all operations of the site to include, traffic control, dumping operations, segregation of debris, burning, grinding, and safety.

B. The TDMS foreman will be responsible for monitoring and documenting equipment and labor time and providing the daily operational report to the AUTHORITY Director, Customer Services or designee.

2.9.2 TDMS Night Foreman

A. The TDMS night foreman must be an employee of the CONTRACTOR and is responsible for managing all night operations approved by the AUTHORITY.

B. The TDMS night foreman will be responsible for monitoring and documenting equipment and labor time and providing the daily operational report to the AUTHORITY Director, Customer Information Services or designee.

2.9.3 TDMS Management Plan

A. Once the TDMS is identified by the AUTHORITY, the CONTRACTOR will provide a Site Management Plan.

B. Three (3) copies of the plan are required. The plan shall be drawn to a scale of 1" = 50' and address the following functions:

1. Access to site
2. Site preparation -clearing, erosion control, and grading
3. Traffic control procedures
4. Safety
5. Segregation of debris
6. Location of ash disposal area, hazardous material containment area, CONTRACTOR work area, and inspection tower
7. Location of incineration operations, grinding operation (if required). Burning operations require a 100-foot clearance from the stockpile and a 1000-foot clearance from structures.
8. Specific plan including and location for the final disposal destination of the mulch/wood chips generated at the public or private TDMS.

2.9.4 Inspection Tower

The CONTRACTOR shall construct an inspection tower at each TDMS within three (3) calendar days of natural disaster. The tower shall be constructed using pressure treated wood or steel scaffold. The floor elevation of the tower shall be 10-feet above the existing ground elevation. The floor area shall be a minimum 8' by 8', constructed of 2"x 8" joists, 16" O.C. with 3/4" plywood supported by a minimum of four 6" x 6" posts. A 4-foot high wall constructed of 2" x 4" studs and ½" plywood shall protect the perimeter of the floor area. The floor area shall be covered with a roof. The roof shall provide a minimum of 6'-6" of headroom below the support beams. Steps with a handrail shall provide access to the tower. Inspection towers must provide a dry area for employees and meet all FEMA and OSHA requirements.

2.9.5 Grinding Operation

The CONTRACTOR shall have grinder(s) on site and in operation within five (5) calendar days following a natural disaster. Failure to provide sufficient grinding capacity to accommodate expected incoming volumes and allow site to operate in an efficient manner within five (5) calendar days shall result in liquidated damages of $10,000 per day. There shall be no period longer than 24 hours in which grinding activity may stop due to equipment or operational failure. Failure to provide back-up equipment within 24 hours shall result in liquidated damages of $2,000 per hour per approved hours of grinding operation per day until grinding activity resumes.

2.9.6 Household Hazardous Waste Containment Area

The CONTRACTOR shall construct a hazardous material containment area at each TDMS. The area shall be 30' x 30'. The perimeter shall be lined with hay bales and staked in place. The area shall be lined with a heavy gage plastic to provide a waterproof barrier. Additional plastic sufficient to cover the area is required to prevent rain from entering the containment area. Site run-off must be redirected from the containment area by site grading.

2.10 PERFORMANCE OF CONTRACTOR

A. It is the intent of this Agreement to ensure that the CONTRACTOR provides a timely quality level of services. To this end, all complaints received by the Emergency Management Coordinator or designee and reported to the CONTRACTOR shall be promptly resolved pursuant to the provisions of this Agreement.

B. The Emergency Management Coordinator or designee may levy administrative charges for the following infractions:

1. Failure to open pre-storm identified sites within three (3) calendar days of after being tasked by the AUTHORITY liquidated damages of $10,000 per day for each day not opened.
2. Closure of TDMS due to CONTRACTOR equipment or operational failures liquidated damages of $25,000 per day, for each day site must remain closed.

C. Failure to provide back-up grinder(s) within 24 hours of equipment breakdown liquidated damages of $2,000 per hour per approved grinding hours of operation per day.

D. CONTRACTOR may also be subject to non-payment and liquidated damages of $200 for each occurrence of the following infractions:

1. Failure to provide audit quality information by 5:00 p.m. of the following day of operation.
2. Loads not properly tarped or otherwise covered.
3. Mixing debris hauled from other sources with debris hauled under this Agreement.
4. Mixing vegetation debris with C & D material.

E. CONTRACTOR may be immediately terminated and not paid for the following:

1. Collection of any non-eligible, non-AUTHORITY approved stumps or debris.
2. Moving to another designated Collection Service Area without prior AUTHORITY approval.
3. Failure to provide service in accordance with guidelines set forth by FEMA and the AUTHORITY.
4. Soliciting work from private citizens or others to be performed in the designated Collection Service Area during the period of this Agreement.
5. Alteration of placards placed on certified trucks and/or trailers.

Any disputes regarding Performance of Contractor will be presented to the Emergency Management Coordinator or designee for review. The Emergency Management Coordinator or designee shall complete review and make determination within three (3) calendar days. Decisions of the Emergency Management Coordinator or designee shall be final.

REMAINDER OF PAGE LEFT BLANK INTENTIONALLY

PART III
PROPOSAL SUBMISSION REQUIREMENTS

3.1 PROPOSAL SUBMISSION REQUIREMENTS AND FORMAT

A. The AUTHORITY uses Negometrix, a 100% digital method of accessing and responding to solicitations. Therefore, PROPOSERS must submit their proposals via Negometrix. The AUTHORITY must receive all Proposals no later than **2:00 P.M.**, Eastern Time on the date established in *Part I, Section 5 – Procurement Schedule*. The complete Proposal package shall be submitted through Negometrix. Should the PROPOSER have any issues with any interaction with the e-Procurement system, PROPOSER is encouraged to contact the Negometrix support desk for assistance as follows: https://support-us.negometrix.com/support/solutions/articles/44000141067-negometrix-supplier-guide.

B. Marketing brochures or any other information not pertaining to this RFP shall not be included in the Proposal.

C. Proposals should demonstrate that the PROPOSER is qualified to perform the Scope of Work based upon relevant professional experience.

3.2 CONTENT:

The PROPOSER shall provide the appropriate information in accordance with the content requirements set forth in the following subsections. To allow the Evaluation Committee to more effectively review the Proposals, PROPOSERS shall provide all requested information in the order and in the format requested below.

3.2.1 Title Page

The Title Page shall include the RFP Title and Number. The page shall indicate clearly the name of the PROPOSER submitting the Proposal and the name, address, phone number, fax number and e-mail address of the PROPOSER'S designated contact person. The PROPOSER'S designated contact person is the individual who shall be the main point of contact for the AUTHORITY to communicate with regarding this procurement.

3.2.2 Table of Contents

3.2.3 General Information

PROPOSER shall provide completed Proposal Forms 1 – 7 as follows:

3.2.3.1 *Proposal Form 1 – Transmittal Letter*

PROPOSER shall submit a completed Proposal Form 1 – Transmittal Letter acknowledging, among other things, that the PROPOSER has completely reviewed, understands, and agrees to be bound by the requirements of this RFP. The Proposal Transmittal Letter shall be signed by a representative of the PROPOSER who is empowered to sign it and to commit the PROPOSER to the obligations contained in the Proposal.

3.2.3.2 *Proposal Form 2 – Proposal Bond*

PROPOSER shall submit a completed Proposal Form 2 – Proposal Bond as described in *Part I, Section 11 - Bond Requirements*.

3.2.3.3 *Proposal Form 3 –Price Proposal*

A. PROPOSER shall submit a completed Proposal Form 3 – Price Proposal. PROPOSER is required to submit prices for Part A, Part B, and Part C. However, Part A will be utilized for evaluation of the Price Proposal scoring of the RFP. Therefore, unit prices for all Items 1 through 6 in Part A must be submitted. No minimum or maximum amount of work is being promised.

B. The AUTHORITY may request explanations for any out-of-balance pricing, explanations for any pricing it deems too low or too high, and to negotiate a best and final price with the best ranked PROPOSER(S). In addition, the AUTHORITY reserves the right to request additional pricing, negotiated by hourly rate, lump sum, or not-to-exceed amount to perform services other than lobbying.

3.2.3.4 *Proposal Form 4 – Non-Collusion Affidavit*

PROPOSER shall provide a completed Proposal Form 4 – Non-Collusive Affidavit as described in *Part I, Section 13 – Non-Collusion Affidavit*.

3.2.3.5 *Proposal Form 5 – Drug-Free Workplace*

PROPOSER shall provide a completed Proposal Form 5 – Drug-Free Workplace.

3.2.3.6 *Proposal Form 6 – PROPOSER'S Qualification Statement*

PROPOSER shall provide a completed Proposal Form 6 – Proposer's Qualification Statement.

3.2.3.7 *Proposal Form 7 – Scrutinized List Certification*

PROPOSER shall provide a completed Proposal Form 7 – Scrutinized List Certification.

3.2.4 Minimum Requirements

The PROPOSER shall substantiate in its submittal that it meets or exceeds the following minimum requirements. Failure to do so may be cause for disqualification of its submittal:

A. The PROPOSER, both corporate and individual, must be fully licensed and certified for the type of work to be performed in the **State of Florida** at the time of submittal of their response to the RFP. Should the PROPOSER not be fully licensed and certified, its submittal will be rejected;

B. PROPOSER must be engaged in providing the services as outlined in this RFP;

C. PROPOSER must have a demonstrated comprehensive understanding in areas listed in this RFP. Understanding and previous experience are essential criteria in the qualifying process;

D. PROPOSER'S personnel and management to be utilized for the services described in this RFP shall be knowledgeable in their areas of expertise. The AUTHORITY reserves the right to perform investigations as may be deemed necessary to insure that competent persons will be utilized in the performance of the contract.

E. PROPOSER shall provide evidence of current levels of insurance as stipulated in the sample Agreement of this RFP.

3.2.5 Experience and Qualifications Narrative

PROPOSER shall demonstrate the following:

A. Provide a comprehensive description of all mobilizations (minimum of three) performed as a prime contractor for disaster debris services collecting and processing a minimum of 1 million cubic yards of debris collected from public right of ways. PROPOSERS unable to identify three or more mobilizations meeting the 1 million cubic yard threshold, per each mobilization, are requested to submit all relevant experience they have that documents the ability to perform the services (right of way collection and TDMS management) as requested by this RFP. No limitation exists for the period of time a PROPOSER may go back to describe the experience as requested. Do not show work performed as a sub-contractor. **(PROPOSAL FORM 6 - FORM A)**

   For each mobilization the PROPOSER is requested to identify the following:

   - Name and type of storm event
   - Date and location
   - Narrative of disaster debris services of work performed during mobilization event
   - Total value of contract for services performed
   - Number of cubic yards of debris collected by PROPOSER from public right of ways during mobilization
   - Number of cubic yards of debris handled by PROPOSER at TDMS during mobilization
   - Name, address, and telephone number of customers point of contact for reference purposes.

B. List all emergency debris removal and disposal contracts performed in the last three (3) years as a prime contractor. **(PROPOSAL FORM 6 - FORM B)**

3.2.6 General Operations Plan

PROPOSER shall provide the following:

1. At a minimum a detailed Mulch Disposal Plan. The AUTHORITY is committed to recycling and or beneficial re-use of mulch. Additional consideration will be taken for Beneficial Re-Use Plan. PROPOSER is required to provide a full description of how PROPOSER intends to dispose and or re-use one million (1,000,000) cubic yards of mulch. PROPOSER is required to address how PROPOSER intends to comply with all federal, state, and local guidelines pertaining to mulch disposal. PROPOSER is also required to submit any agreement(s) he/she currently has for the disposal and or beneficial re-use of mulch. PROPOSER is required to give a full description of their end use plan.

2. At a minimum a detailed TMDS Plan pertaining to Construction Debris (C & D) Recycling and or Reduction for estimated five hundred thousand (500,000) cubic yards. The AUTHORITY requests that PROPOSER implements a recycling and/or reduction program for C & D material to minimize amount of debris that will go to a landfill. PROPOSER is requested to address programs they will implement to facilitate recycling and or reduction of construction debris waste.

3. Resumes for the PROPOSER'S management team and all key personnel who will be assigned to the agreement to include, among other things: names, job titles, responsibilities, and applicable debris management experience.

4. Provide private TDMS available for use in Palm Beach County or close proximity. Provide letters of agreements with the owners for use of such sites. Identify the location of the sites and site

configuration. Five (5) additional points will be provided if PROPOSER submits additional private TDMS.

5. Provide description of other emergency services performed, e.g.: shelter, generators, roofing, communications, food, ice, etc.

3.2.7 Cost (Proposal Form 3):

A. The pricing structure submitted in Proposal Form 3 – Price Proposal shall be firm. However, the AUTHORITY reserves the right to negotiate a "best and final" price for each task category with the highest ranked PROPOSER(S).

B. Price Proposal will include be evaluated based on Proposal Form 3 – Part A – Volume Based Pricing for 3,000,000 Cubic Yards (CY) Debris Disaster. Proposer must provide price for all line **Item 1 through Item 6**. Failure to do so may render your Proposal as non-responsive.

C. PROPOSER is also required to submit pricing for Part B – Hourly Rates and Part C – Unit Cost Schedule as well, even though these sections will not be used to evaluate the Price Proposal of the RFP.

3.2.8 Small/Minority/Women Business Enterprise (S/M/WBE) Participation

A. The Governing Board of the AUTHORITY has implemented the Economic Inclusion Policy and Procedures administered by the Equal Business Opportunity (EBO) Program Office to ensure that all segments of its business population, including, but not limited to small, local, minority, and women-owned businesses, have an equitable opportunity to participate in the AUTHORITY'S procurement process. Refer to Section 6 of the AUTHORITY's Purchasing Manual. Small Business Enterprise (SBE) and Minority/Women Business Enterprise (M/WBE) is hereby mentioned as ("S/M/WBE") in the RFP. The PROPOSER also agrees that by submitting its response to this RFP that it constitutes an acknowledgement that it has reviewed this Section of the AUTHORITY's Purchasing Manual.

B. In accordance with Section 6.1 through 6.4 of the Purchasing Manual, Economic Inclusion Policy and Procedures, the AUTHORITY's Equal Business Opportunity (EBO) Office **has NOT applied an Affirmative Procurement Initiative (API) to this procurement. Therefore, no local S/M/WBE participation is required by this solicitation.**

C. The AUTHORITY does however encourage vendors to include Small/Minority/Women Business Enterprises (S/M/WBE) participation, whenever possible. For information on the Economic Inclusion Policy and Procedures, please contact the EBO Office at 561-640-4000 or visit www.swa.org/EBO.

3.2.9 PROPOSER'S Qualification Statement – (Proposal Form 6)

3.2.10 Scrutinized Business Certification – (Proposal Form 7)

PART IV
PROPOSAL EVALUATION AND AWARD

4.1. GENERAL:

All Proposals submitted in response to this RFP will be evaluated by the AUTHORITY'S Evaluation Committee based on the information supplied per *Part III – Proposal Submission Requirements* and utilizing criteria specified in *Part IV – Proposal Evaluation and Award*.

4.2. EVALUATION CRITERIA:

The review and analysis of the Proposals by the /Evaluation Committee will be based on the following criteria:

- Submission of a complete package including all Forms
- Experience and Qualifications
- General Operations Plan
- Price Proposal

4.3. EVALUATION METHOD:

A. Evaluation Committee members will conduct a completeness review of the Proposals. Proposals must include all requirements specified in *Part III – Proposal Submission Requirements.* Minor informalities or irregularities may be waived by the AUTHORITY. Those Proposals found to be complete, will then be ranked by individual members. At its discretion the AUTHORITY may require any PROPOSER(S) to make an oral presentation of his/her submittal. An oral presentation provides an opportunity for the PROPOSER(S) to clarify his/her submittal for the AUTHORITY. The AUTHORITY, if deemed necessary, will notify the PROPOSER(S) that an oral presentation will be scheduled which may result in a re-evaluation of proposals.

B. *Table 2 – Evaluation Criteria and Points* provide guidelines for the Evaluation Committee members for the ranking of Proposals. In each category where points are to be assigned by individual Evaluation Committee members, PROPOSERS may receive up to the maximum allowable number of points for each category. When awarding points to a proposal, the Evaluation Committee members will be encouraged to use the entire range of awardable points in each category. The total points awarded by each Evaluation Committee member to each Proposal will be tallied and ranked. The proposal with the most points will be ranked a 1; the proposal with the second most points will be ranked a 2; the proposal with the third most points will be ranked a 3, and so forth until each proposal has been awarded points and ranked accordingly. The Proposal with the lowest number 1 rankings will be ranked first overall and recommended for award of the Contract. The Evaluation Committee members will continue in this manner and provide overall rankings to each proposal until all proposals have been given an overall ranking. No points will be awarded for use of local S/M/WBE or S/M/WBE's. The use of these firms is encouraged strictly on a voluntary basis and will not be an evaluative factor in the award of the final Contract awarded pursuant to this solicitation.

Table 2 - Evaluation Criteria and Points

EVALUATION CRITERIA	POINTS
Experience and Qualifications	40[1]
General Operations Plan	40[2]
Price Proposal	20[3]
TOTAL:	**100**

Points footnotes as follows:

1. PROPOSER will receive up to 40 points if PROPOSER submits and exceeds the minimum requirements listed in *PART III, Section 3.2.5 - Experience and Qualifications Narrative and also demonstrate applicable recent experience.* Points will be deducted if these requirements are not met.

2. PROPOSER will receive up to 40 points if PROPOSER submits and exceeds the minimum requirements listed in *Part III, Section 3.2.6 – General Operations Plan*. Points will be deducted if any of these requirements are not met.

3. PROPOSER who submits the Proposal with the lowest Total Proposal Price will receive 20 points. *See example below.*

Total Proposal Price	Percentage of Available Points	Total Points
$35,000,000.00	100%	20.00
$36,000,000.00	97%	19.44
$37,000,000.00	95%	18.92
$38,000,000.00	92%	18.42
$39,000,000.00	90%	17.95
$40,000,000.00	88%	17.50
$41,000,000.00	85%	17.07
$42,000,000.00	83%	16.67
$43,000,000.00	81%	16.28
$44,000,000.00	80%	16.36
$45,000,000.00	78%	15.56

Percentage of Available Points: Lowest Submittal = 100% of Available Points
Calculation for next lowest, etc.= (Lowest Submittal/Next Lowest Submittal) x 20

4.4. AWARD:

A. The AUTHORITY anticipates, but does not guarantee, award to the PROPOSER who submits the Proposal determined by the SWA Board to be the most advantageous. The AUTHORITY anticipates awarding to the four (4) highest ranked PROPOSERS but reserves the right to award more or few Agreements if it is in the best interest of the AUTHORITY.

B. The AUTHORITY intends to enter into the Agreement negotiations with the highest ranked PROPOSER. If the AUTHORITY and the best ranked PROPOSER cannot negotiate a successful Agreement, the AUTHORITY may terminate such negotiations and begin negotiations with the next best ranked PROPOSER. No PROPOSER shall have any rights against the AUTHORITY arising from such negotiations.

C. Agreements awarded will be based on the final ranking achieved during the selection process. The number of Agreements that are activated will be based on the magnitude and complexity of the AUTHORITY'S post disaster needs. It will be in the AUTHORITY'S sole discretion how many Agreements are activated.

D. The price structure submitted in the Proposals shall be firm. However, the AUTHORITY reserves the right to negotiate a "best and final" price with the best ranked PROPOSER.

E. The Agreements will be for a term of three (3) years with option to extend for three (3) additional years under the same terms and conditions. The selected PROPOSERS will standby for much of the duration of the three (3) years and optional additional three (3) years extension, and only be called to active duty when a debris generating event occurs. This call to active duty may be repeated several times within the three (3) year and optional three (3) years extension Agreement period depending on the number of separate debris events that occur.

F. The PROPOSER understands that this RFP does not constitute an agreement or a contract with the PROPOSER. An official agreement or contract is not binding until Proposals are reviewed and accepted and a contract is awarded by the SWA Board and executed by the parties. A Sample Agreement is attached to this RFP. The AUTHORITY anticipates that the final agreement will be in substantial conformance with the Sample Agreement; nevertheless, PROPOSERS are advised that any agreement, which may result from this RFP, may deviate from the Sample Agreement.

REMAINDER OF PAGE INTENTIONALLY LEFT BLANK

PART V
PROPOSAL FORMS

The following Proposal Forms are included:

Proposal Form 1 – Transmittal Letter

Proposal Form 2 - Proposal Bond

Proposal Form 3 – Price Proposal

Proposal Form 4 – Non-Collusion Affidavit

Proposal Form 5 – Drug-Free Workplace

Proposal Form 6 – PROPOSER'S Qualification Statement – with **FORM A** and **FORM B**

Proposal Form 7 – Scrutinized List Certification

REMAINDER OF PAGE INTENTIONALLY LEFT BLANK

PROPOSAL FORM 1 – TRANSMITTAL LETTER

(To be typed on PROPOSER'S Letterhead)

[Date]

Diane LeRay CPPO, CPPB
Procurement Manager, Purchasing Services
Solid Waste Authority of Palm Beach County
7501 North Jog Road
West Palm Beach, FL 33412

Dear Ms. LeRay:

_____ (PROPOSER) hereby submits its Proposal in response to the **Request for Proposal (RFP) No.: 22-201/DL for HURRICANE/DISASTER DEBRIS REMOVAL, REDUCTION AND DISPOSAL** issued by the Solid Waste Authority of Palm Beach County (AUTHORITY) in January 2022.

As a duly authorized representative of the PROPOSER, I hereby certify, represent and warrant, on behalf of the PROPOSER team, as follows in connection with the Proposal:

1. The PROPOSER acknowledges receipt of the RFP and the following Addenda:

No.	Date
_____	_____
_____	_____

2. The submittal of the Proposal has been duly authorized by, and in all respects is binding upon, the PROPOSER.

3. All information and statements contained in the Proposal are current, correct and complete, and are made with full knowledge that the AUTHORITY will rely on such information and statements in qualifying PROPOSER.

4. The PROPOSER certifies under penalties of perjury that the RFP has been prepared and is submitted in good faith without collusion, fraud or any other action with any other person taken in restraint of free and open competition for the services contemplated by the RFP. As used in this Proposal Form, the word "person" shall mean any natural person, business, partnership, corporation, union, committee, club, or other organization, entity, or group of individuals.

5. The PROPOSER is not currently suspended or debarred from doing business with any governmental entity.

6. The PROPOSER has reviewed all of the engagements and pending engagements of the PROPOSER, and no potential exists for any conflict of interest or unfair advantage.

7. No person or selling agency has been employed or retained to solicit the award of the Agreement under an arrangement for a commission, percentage, brokerage or contingency fee or on any other success fee basis, except bona fide employees of the PROPOSER.

8. The principal contact person who will serve as the interface between the AUTHORITY and the PROPOSER for all communications is:

Name: _____

Title: _____

Mailing Address: _____

Phone: _____

Fax: _____

E-mail: _____

The PROPOSER has carefully examined all documents constituting the RFP and the addenda thereto and, being familiar with the work and the conditions affecting the work contemplated by the RFP and such addenda, offers to furnish all labor, materials, supplies, equipment, facilities and services which are necessary, proper or incidental to carry out such work as required by and in strict accordance with this RFP and the Proposal.

_____
Name of Proposer

_____
Print Name of Designated Signatory

_____
Signature

_____
Title

State of _____

County of _____

On this _____ day of _____, 20____, before me appeared _____ personally known to me to be the person described in and who executed this _____ and acknowledged that (she/he) signed the same freely and voluntarily for the uses and purposes therein described.

In witness thereof, I have hereunto set my hand and affixed my official seal the day and year last written above.

_____
Signature

Notary Public in and for the State of _____

(Affix Seal here)

_____
(Name printed)

Residing at _____

My commission expires _____

ACKNOWLEDGMENT OF CONTRACTOR, IF A PARTNERSHIP

State of _____

SS:

County of _____

On this _____ day of _____, 20_____, before me personally came and appeared _____, to me known, and known to me to be one of the members of the firm of _____ described in and who executed the foregoing instrument and he/she acknowledged to me that he/she executed the same as and for the act and deed of said firm.

_____
Notary Public
(Seal)

ACKNOWLEDGMENT OF CONTRACTOR, IF AN INDIVIDUAL

State of _____

SS:

County of _____

On this _____ day of _____, 20_____, before me personally came and appeared _____, to me known, and known to me to be the person described in and who executed the foregoing instrument and acknowledged that he/she executed the same.

_____
Notary Public
(Seal)

PROPOSAL FORM 2 – PROPOSAL BOND

KNOW ALL MEN BY THESE PRESENTS, that we, the undersigned:

_____, as Principal and
(Name of Proposer)

_____, as Surety, are
(Name of Surety)

hereby held and firmly bound unto the Solid Waste Authority of Palm Beach County, West Palm Beach, Florida, as Obligee, in the sum of:

_____

_____ Dollars ($_____) / **5% of the Performance and Payment Bond, which is in the amount of $10,000,000,** as liquidated damages for payment of which, well and truly to be made, we hereby jointly and severally bind ourselves, our heirs, executors, administrators, successors, and assigns.

The condition of this obligation is such that whereas the Principal has submitted to the Solid Waste Authority of Palm Beach County a certain Proposal attached hereto and made a part hereof, to enter into an Agreement, hereinafter referenced to as the **AGREEMENT FOR HURRICANE/DISASTER DEBRIS REMOVAL, REDUCTION, AND DISPOSAL.**

NOW THEREFORE,

a. If said Proposal shall be rejected or withdrawn as provided in the Request for Proposal or, in the alternative,

b. If said Proposal shall be accepted and the Principal shall duly execute and deliver the Agreement attached hereto and shall furnish all insurance requirements, the specified Performance and Payment Bond for the faithful performance of the Agreement and for the payment of labor and materials furnished for the performance of the Agreement,

then this obligation shall be void, otherwise it shall remain in full force and effect, it being expressly understood and agreed that the liability of the Surety for any and all claims hereunder in no event shall exceed the amount of this obligation.

The Surety, for value received, hereby agrees that the obligations of said Surety and its bond shall be in no way impaired or affected by any extensions of the time within which such Proposal may be accepted and said Surety does hereby waive notice of any such extensions.

IN WITNESS WHEREOF, the parties hereto have duly executed this bond on the _____ day of _____, 20____.

PRINCIPAL: _____

By: _____
Signature

(Seal)

WITNESS:

1. _____

2. _____

Name: _____

Title: _____

Address: _____

_____

Telephone: _____

SURETY: _____

By: _____
Signature

(Seal)

WITNESS:

1. _____

2. _____

Name: _____

Title: _____

Address: _____

_____

Telephone: _____

Surety companies executing bonds **must** appear on the Treasury Department's most current list (Circular 570 as amended) and be authorized to transact business in the State of Florida, in accordance with Florida Statute 287.0935, and be approved by the Solid Waste Authority of Palm Beach County.

PROPOSAL FORM 3 – PRICE PROPOSAL

PART A – VOLUME BASED PRICING FOR 3,000,000 CUBIC YARD (CY) DEBRIS DISASTER

ITEM/DESCRIPTION	ESTIMATED QUANTITY	UNIT	PRICE PER CY	EXTENSION
1.0 Public Property and Right of Way Collection, Loading and Hauling to a designated TDMS.				
A. Vegetation	2,500,000	CY		
B. Construction Debris / Mixed Debris	500,000	CY		
2.0 TDMS operation to include placement of monitoring towers, portable toilets, keeping on-site and adjacent roads area clean of trash and garbage, debris acceptance, pile management, and Phase I Reclamation.	3,000,000	CY		
3.0 Processing of debris through grinding and/or chipping.	2,500,000	CY		
4.0 Loading, hauling and disposing wood chips to final destination. ***(This rate includes disposal cost)***	1,000,000	CY		
5.0 Volume reduction through air curtain incineration.	2,500,000	CY		
6.0 Loading and hauling of construction debris and/or mixed debris from TDMS to a permitted C&D recycling facility or any other designated Disposal Facility. ***(This rate <u>shall not</u> include disposal cost). Based on miles from TDMS to final destination– 1 way.***				
A. 0 ≤ 20 miles	500,000	CY		
B. > 20 ≤ 50 miles	500,000	CY		
C. > 50 ≤ 100 miles	500,000	CY		
AVERAGE: (Item 6.0 A-C)				
AVERAGE: (Item 6.0 A-C) **X 500,000** CY **=**				$
TOTAL PROPOSAL PRICE: (Items 1.0 - 4.0; 6.0)				$

PROPOSER MUST PROVIDE PRICE FOR ALL LINE ITEMS 1 THRU 6. FAILURE TO DO SO MAY RENDER YOUR PROPOSAL TO BE DEEMED NON-RESPONSIVE.

Unit Prices, unless otherwise indicated, shall include all labor (operators, laborers, supervisors) and materials including but not limited to: supplies, equipment maintenance, repairs, repair parts, fuels, lubricants, cellular phones, transportation, and housing, if required, necessary to accomplish the project. The quantities and distributions are estimated for the purpose of making an award. Locations of sites, debris quantities, destinations, material densities, etc. may differ substantially in an actual disaster.

Assumptions: 3,000,000 cubic yards of debris consisting of 2,500,000 cubic yards of vegetation debris and 500,000 cubic yards of mixed debris.

PROPOSAL FORM 3 – PRICE PROPOSAL

PART B – HOURLY RATES

TDMS SET-UP AND CLOSURE AND DEBRIS CLEARANCE FOR ACCESS - OPTIONAL USE BY COUNTY AND OTHER GOVERNMENTAL ENTITIES			
EQUIPMENT AND LABOR RATES			
EQUIPMENT TYPE	**HOURLY EQUIPMENT RATE**	**HOURLY LABOR RATE**	**TOTAL HOURLY RATE**
Bobcat Loader			
Crew Foreman w/ Cell Phone and Pickup			
Dozer, Tracked, D5 or similar			
Dozer, Tracked, D6 or similar			
Dozer, Tracked, D7 or similar			
Dozer, Tracked, D8 or similar			
Dump Truck, 18 CY-20 CY			
Dump Truck, 21CY-30 CY			
Generator and Lighting			
Grader w/ 12' Blade			
Hydraulic Excavator, 1.5 CY			
Hydraulic Excavator, 2.5 CY			
Knuckleboom Loader			
Laborer w/ Chain Saw			
Laborer w/ small tools, traffic control, flag person			
Lowboy Trailer w/ Tractor			
Operations Manager w/ Cell Phone and Pickup			
Pickup Truck, .5 Ton			
Soil Compactor 81 HP+			
Soil Compactor to 80 HP			
Soil Compactor, Towed Unit			
Truck, Flatbed			
Tub Grinder, 800 to 1,000 HP			
Water Truck			
Wheel Loader, 2.5 CY, 950 or similar			
Wheel Loader, 3.5-4.0 CY, 966 or similar			
Wheel Loader, 4.5 CY, 980 or similar			
Wheel Loader-Backhoe, 1.0-1.5 CY			
Other – Please List			

Attach additional sheet with equipment type and labor rates, if needed

PROPOSAL FORM 3 – PRICE PROPOSAL

PART C – UNIT COST SCHEDULE

ITEM	HAZARDOUS STUMP REMOVAL, HAULING, AND DISPOSAL	UNIT	UNIT COST
1.	24-inch diameter to 48.99-inch diameter	Stump	
2.	49-inch diameter and greater	Stump	
3.	Stump Fill Dirt – Fill dirt for stump holes after removal	CY	
	HAZARDOUS HANGING LIMBS (HANGERS), AND HAULING To include removal of all hanging limbs. Limbs to be cut and placed on the right of way for collection as vegetative debris.		
4.	2-inch diameter and greater	Tree	
	HAZARDOUS TREE REMOVAL, AND HAULING Trees to be flush cut at ground level and placed on the right of way for removal as vegetative debris.		
5.	6-inch diameter to 12.99-inch diameter	Tree	
6.	13-inch diameter to 24.99-inch diameter	Tree	
7.	25-inch diameter to 48.99-inch diameter	Tree	
8.	49-inch diameter and greater	Tree	

NOTE:
The following is information only and will NOT be considered in the evaluation of this RFP

The AUTHORITY reserves the right to use this contract to handle small quantities of debris removal and as support for our Franchise Contracts as needed. Below is a daily rate to remove debris. The AUTHORITY will pay for the disposal cost. There is no requirement to provide a rate, however if you do, we expect your company to honor this special service and respond within 48 hours at the rate below.

COLLECTION SERVICE ONLY	
EQUIPMENT	DAILY RATE (10 HRS/DAY)
Knuckleboom Loader and Operator	$

PROPOSAL FORM 4 – NON-COLLUSION AFFIDAVIT

State of _____

County of _____

Being duly sworn deposes and says:

That she/he is an officer of the parties making the foregoing Proposal, that such Proposal is genuine and not collusive or sham; that said PROPOSER has not colluded, conspired, connived or agreed, directly or indirectly with any PROPOSER or person, to put in a sham bid or to refrain from bidding and has not in any manner, directly, or indirectly, sought by agreement or collusion or communication or conference with any person, to fix the price or affiant or any other PROPOSER, or to fix any overhead, profit or cost element of said price, or that of any other PROPOSER, or to secure any advantage against the AUTHORITY, or any person interested in the proposed contract and that all statements in said Proposal are true.

_____
Name of Proposer

_____
Print Name of Designated Signatory

_____
Signature

_____
Title

On this _____ day of _____, 20____, before me appeared _____ personally known to me to be the person described in and who executed this _____ and acknowledged that (she/he) signed the same freely and voluntarily for the uses and purposes therein described.

In witness thereof, I have hereunto set my hand and affixed my official seal the day and year last written above.

_____
Signature

Notary Public in and for the State of _____

(Affix Seal here)

_____
(Name printed)

Residing at _____

My commission expires _____

PROPOSAL FORM 5 – DRUG-FREE WORKPLACE

The undersigned vendor in accordance with Florida Statute 287.087 hereby certifies that _____ does:

(Name of Business)

1. Publish a statement notifying employees that the unlawful manufacture, distribution, dispensing, possession, or use of a controlled substance is prohibited in the workplace and specifying the actions that will be taken against employees for violations of such prohibition.

2. Inform employees about the dangers of drug abuse in the workplace, the business's policy of maintaining a drug-free workplace, any available drug counseling, rehabilitation, and employee assistance programs, and the penalties that may be imposed upon employees for drug abuse violations.

3. Give each employee engaged in providing the commodities or contractual services that are under bid a copy of the statement specified in subsection (1).

4. In the statement specified in subsection (1), notify the employees that, as a condition of working on the commodities or contractual services that are under bid, the employee will abide by the terms of the statement and will notify the employer of any conviction of, or plea of guilty or nolo contendere to, any violation of Chapter 893 or of any controlled substance law of the United State or any state, for a violation occurring in the workplace no later than five (5) days after such conviction.

5. Impose a sanction on, or require the satisfactory participation in a drug abuse assistance or rehabilitation program if such is available in the employee's community, by any employee who is so convicted.

6. Make a good faith effort to continue to maintain a drug-free workplace through implementation of this section.

As the person authorized to sign the statement, I certify that this firm complies fully with the above requirements.

_____
Print Name of Designated Signatory

_____
Signature

_____
Date

PROPOSAL FORM 6 - PROPOSER'S QUALIFICATION STATEMENT

The undersigned certifies under oath the truth and correctness of all statements and of all answers to questions made hereinafter:

SUBMITTED TO: **SOLID WASTE AUTHORITY OF PALM BEACH COUNTY**
PURCHASING SERVICES DEPARTMENT
7501 N. Jog Road
West Palm Beach, FL. 33412

Submitted by:

Name: _____

Address:_____

City, State, Zip: _____

Federal Identification Number (FID) _____

Check One	
Corporation:	☐
Partnership:	☐
Individual:	☐
Other*	☐

(* if other is being checked, please provide supporting documentation to validate the legality of the Firm)

1. State the true, exact, correct, and complete name of the partnership, trade or fictitious name under which you do business and the address of the place of business.

   The correct name of the PROPOSER is:

   _____

   The address of the principal place of business is:

   _____

   _____

2. If PROPOSER is corporation, answer the following:

   a. Date of Incorporation: _____
   b. State of Incorporation: _____
   c. President's name: _____
   d. Vice President's name: _____
   e. Secretary's name: _____
   f. Treasurer's name: _____
   g. Name and Address of Resident Agent: _____
      _____

3. If PROPOSER is an individual or a partnership, answer the following:

   a. Date of organization: _____
   b. Name, address, and ownership units of all partners:
      _____
      _____
      _____
   c. State whether general or limited partnership: _____

4. If PROPOSER is other than an individual, corporation or partnership, describe the organization and give the name and address of principals:

_____
_____
_____

5. If PROPOSER is operating under a fictitious name, submit evidence of compliance with the Florida Fictitious Name Statute.

_____

6. How many years has your organization been in business under its present business name? _____

Under what other former names has your organization operated?

_____
_____
_____

7. Indicate registration, license numbers or certificate numbers for the businesses or professions, which are the subject of this RFP solicitation. Please attach certificate of competency and/or state registration.

_____
_____
_____

8. Provide a narrative of Firm's Safety Program, Quality Assurance/Quality Control Management methods.

_____
_____
_____

9. PROPOSER shall provide **FORM A** and **FORM B** attached to this Proposers Qualification Statement in response to Experience and Qualifications as per Part III – PROPOSAL SUBMISSION REQUIREMENTS. **FORMS A & B** are attached: YES ☐ NO ☐

10. List and describe all bankruptcy petitions (voluntary or involuntary) which have been filed by or against the PROPOSER, its parent or subsidiaries or predecessor organizations during the past five (5) years. Include in the description, the disposition of each such petition.

_____
_____
_____
_____

11. A list of all enforcement actions against the facility for the last three (3) years including any consent orders entered, notices of violations received, and any judgments against the facility. Also, list the amount of any fines, penalties, or judgments, or other infractions in which the destination facility or facilities have received in the most current three (3) years of operation.

_____
_____
_____
_____
_____

12. List and describe any disciplinary action, administrative proceeding, malpractice claim or other like proceeding against your Firm or any of its lawyers, whether current or pending, as well as any such action, proceeding or claim occurring during the last five (5) years.

_____

_____

_____

_____

13. Has the PROPOSER, its principals, officers, or predecessors' organization(s) been CONVICTED of a Public Entity Crime, debarred, or suspended from bidding by any governmental entity during the last five (5) years? If so, provide details.

_____

_____

_____

_____

14. Has the PROPOSER in the past four (4) years, been rendered a final adjudicated determination in a legal or administrative proceeding in the State of Florida that the PROPOSER discriminated against its subcontractors, vendors, suppliers, or commercial customers? If yes, PROPOSER shall provide a list of all instances to include but not limited to; description of the status or resolution of the complaint, including any remedial action taken. (Attach additional sheets as necessary)

_____

_____

_____

_____

The PROPOSER acknowledges and understands that the information contained in response to this Qualifications' Statement shall be relied upon by the Solid Waste Authority of Palm Beach County (AUTHORITY), in awarding the contract and such information is warranted by PROPOSER to be true. The discovery of any omission or misstatement that materially affects the PROPOSER's qualifications to perform under the contract shall cause the AUTHORITY to reject the proposal, and if after the award, to cancel and terminate the award and/or contract.

(Signed): _____

(Printed Name): _____

(Title): _____

FORM A

COLLECTION and/or TDMS OPERATING

Experience as a Prime Contractor ONLY

List all activations for which your company collected and/or processed greater than 1 million cubic yards of debris.

Disaster Name	Date	Location	Services Provided	Contract Amount	TTL CY Collected or Processed	Contact Name, Address, Phone #

FORM B

DEBRIS REMOVAL, DEBRIS SITE OPERATIONS/PROCESSING, and FINAL DISPOSAL DESTINATION

Experience as a Prime Contractor ONLY

List all activations for which your company performed as the Prime Contractor for the past three (3) years (commencing 11/2018)

Disaster Name	Date	Location	Services Provided (Please circle selection)	Contract Amount	TTL CY Collected or Processed	Contact Name, Address, Phone #
			A B C			
			A B C			
			A B C			
			A B C			
			A B C			
			A B C			
			A B C			
			A B C			
			A B C			
			A B C			
			A B C			

Please use the following key for Services Provided: **A=Debris Removal**; **B=Debris Site Operations/Processing**; **C=Final Disposal Destination**.
List all letters that are applicable for each activation listed.

CERTIFICATION PURSUANT TO FLORIDA STATUTE §215.4725

HURRICANE/DISASTER DEBRIS REMOVAL, REDUCTION AND DISPOSAL

RFP NO.: 22-201/DL

I, _____, on behalf of _____,
Print Name Name of Business

certifies that _____ does not:
Name of Business

1. Participate in a boycott of Israel; and
2. Is not on the Scrutinized Companies that Boycott Israel list; and
3. Is not on the Scrutinized Companies with Activities in Sudan List; and
4. Is not on the Scrutinized Companies with Activities in the Iran Petroleum Energy Sector List; and
5. Has not engaged in business operations in Cuba or Syria.

As the person authorized to sign the statement, I certify that this Firm complies fully with the above requirements.

_____ _____
PROPOSER'S SIGNATURE DATE

PART VI
ATTACHMENTS

The following Attachments are included:

Attachment A – Sample Contract Agreement

Attachment B – Task Order Disaster Debris Management

Attachment C – Pre-Approved Temporary Debris Management Sites Map

Attachment D – Public Assistance Program and Policy Guide

Attachment E – Mobilization Schedule

Attachment F – FHWA Form 1273

Attachment G – Buy America Requirements

Attachment H – Performance and Payment Bond

YOUR PARTNER FOR
SOLID WASTE SOLUTIONS

ATTACHMENT A

SAMPLE AGREEMENT FOR

_____ SERVICES

BETWEEN

SOLID WASTE AUTHORITY OF PALM BEACH COUNTY

AND

(NAME OF CONSULTANT)

AGREEMENT NO. 22-XXX

SOLID WASTE AUTHORITY OF PALM BEACH COUNTY
7501 NORTH JOG ROAD
WEST PALM BEACH, FLORIDA 33412
(561) 640-4000

TABLE OF CONTENTS

ARTICLE		PAGE
1.	Effective Date and Incorporation of Recitals	1
2.	Services to be performed by Contractor	1
3.	Compensation	1
4.	Insurance	2
5.	Standard of Care	3
6.	Indemnification	3
7.	Independent Contractor	3
8.	Authority to Conduct Business	4
9.	Compliance with Laws	4
10.	Sub-Contractor	4
11.	Federal and State Taxes	4
12.	Availability of Funds	4
13.	Authority's Responsibilities	4
14.	Default	4
15.	Termination for Convenience	5
16.	Uncontrollable Forces	5
17.	Jurisdiction, Venue, Waiver of Jury Trial and Remedies	5
18.	Commercial Non-Discrimination Policy	6
19.	Waiver	6
20.	Severability	6
21.	Entirety of Agreement and Modification	6
22.	Successors and Assigns	7
23.	Contingent Fees	7
24.	Truth-in-Negotiation Certificate	7
25.	Ownership of Documents	7
26.	Public Records, Access and Audits	7
27.	Inspector General	9
28.	Notice	9
29.	Contract Administration	10
30.	Key Personnel	10
31.	Equal Business Opportunity Program	10
32.	Scrutinized Companies	10
33.	Agreements with other Governmental Entities	11
34.	Third Party Beneficiary Disclaimer	11
35.	E-Verify – Employment Eligibility	11
36.	Confidentiality	11
37.	Payment Adjustment Schedule	12
38.	Order of Agreement Activation/Location Assignment	13
39.	Task Order/Performance	13
40.	Bonds	13
41.	Florida Highway Administration (FHWA) Form 1273	14
42.	Buy America Requirements	14
43.	Disadvantaged Business Enterprises	14
44.	Certification Regarding Suspension and Debarment	15
45.	Access to Records and Their Retention	15
46.	Audit Requirements	15
47.	National Environmental Policy Act (NEPA)	16

48. Americans with Disabilities Act 16
49. Compliance with Title VI, Title VII and other Federal Laws and Regulations 16
50. Convict Labor Prohibition 16
51. Certification Regarding Lobbying Activities 16
52. DHS Seal, Logo, and Flags 16
53. No Obligation by Federal Government 16
54. Program Fraud and False or Fraudulent Statement or Related Acts 16
Contract Execution 17

EXHIBITS

A. Scope of Work 18
B. Fee Schedule 19

ATTACHMENTS

A. Sample Contract Agreement
B. Task Order Disaster Debris Management 20
C. Pre-Approved Temporary Debris Management Sites Map 21
D. Public Assistance Program and Policy Guide 22
E. Mobilization Schedule 23
F. FHWA Form 1273 24
G. Buy America Requirements 36
H. Performance and Payment Bond 37

AGREEMENT FOR PROFESSIONAL SERVICES

This Agreement is made and entered into as of _____, 2022, (hereinafter referred to as the Agreement) by and between **Solid Waste Authority of Palm Beach County**, a dependent special district created by Chapter 2001-331, Laws of Florida, as amended, (hereinafter referred to as AUTHORITY) and **NAME OF CONTRACTOR** (hereinafter referred to as CONTRACTOR), a Corporation, whose Federal Employer ID Number is _____;

Whereas, in accordance with the AUTHORITY's Request for Proposals No. 22-XXX/XX, solicited to employ the services of the CONTRACTOR for the purpose of providing _____ Services, and;

Whereas, CONTRACTOR represents it is capable and prepared to provide such services.

Now, therefore, in consideration of the promises contained herein and other good and valuable consideration, the receipt of which is acknowledged by the other, the parties hereto agree as follows:

ARTICLE 1 - EFFECTIVE DATE AND INCORPORATION OF RECITALS

The foregoing recitals are hereby incorporated herein by reference.

1.1 The Effective Date of this Agreement shall be **(MONTH)(DAY) _____, 2022** and the Initial Term of this Agreement is for three (3) years and shall expire on **(MONTH)(DAY) _____, 2025,** unless terminated earlier as provided for herein.

1.2 The AUTHORITY shall have the option of extending this Agreement for three (3) additional years, as approved by the AUTHORITY's Board or designee, in its sole and unfettered discretion, on the same terms and conditions. Such extension shall be in the form of a written Amendment to the Agreement executed by both parties.

1.3 The continuance of this Agreement from year-to-year is contingent upon successful annual recertification of the CONTRACTOR's capabilities. The recertification process will be a review of the fiscal (bankruptcy, etc.), logistical (equipment availability, etc.), and moral (conviction for environmental crime, conviction for crime against a public entity, etc.) responsibility of the CONTRACTOR and a determination by the AUTHORITY, based on this review, of whether or not the CONTRACTOR continues to be a viable firm to provide the services described in this Contract.

ARTICLE 2 - SERVICES TO BE PERFORMED BY CONTRACTOR

CONTRACTOR shall perform the services as specifically stated in the Scope of Work, attached hereto and made a part hereof as Exhibit A, and/or as may be specifically designated and authorized by the AUTHORITY. Such authorizations will be referred to as Task Orders. Each Task Order shall set forth a specific scope of services, rate/amount of compensation, completion date, and other pertinent details of the task being authorized. The AUTHORITY, by virtue of this Agreement, gives the CONTRACTOR no guarantee of any work/services or any specific amount of work/services that may be accomplished during the period this Agreement is in full force and effect.

ARTICLE 3 - COMPENSATION

3.1 The AUTHORITY shall pay CONTRACTOR in accordance with the Fee Schedule, attached hereto and made a part hereof as Exhibit B. In addition, the parties may negotiate a lump sum or not-to-exceed amount on a per-project basis on an individual Task Order.

3.2 The CONTRACTOR shall submit semi-monthly invoices for services rendered. All invoices must reference the Task Order number. Invoices shall include a statement of progress and appropriate audit quality detail to satisfy the Federal Emergency Management Agency (FEMA) requirements.

.

3.3 Payment of CONTRACTOR by AUTHORITY is not contingent upon the AUTHORITY being reimbursed by the Federal Emergency Management Agency (FEMA). Payment to CONTRACTOR will be made for any work directed by the AUTHORITY which is determined by Federal and State agencies to be ineligible for reimbursement.

3.4 Payment of invoices shall be within thirty (30) days after receipt of a correct, fully documented invoice. All invoices shall be delivered to:

Solid Waste Authority of Palm Beach County
7501 North Jog Road
West Palm Beach, Florida 33412
Attn: Accounts Payable

3.5 CONTRACTOR will clearly mark its final/last billing with the words "Final Invoice". This will certify that all services have been fully performed under this Agreement and that all charges and costs have been invoiced to the AUTHORITY. Thereupon, this account will be closed and any additional charges or costs, not included in the Final Invoice, shall be waived by CONTRACTOR. The AUTHORITY shall not be liable for the payment of any such additional charges or costs not included in the Final Invoice.

3.6 The AUTHORITY will retain 5% of the payment under each Task Order until such time as the entire project is completed to the AUTHORITY's satisfaction and all subcontractors and any material suppliers verify that they have been paid.

ARTICLE 4 - INSURANCE

4.1 During the performance of the Services under this Agreement, CONTRACTOR shall maintain the following insurance policies written by an insurance company authorized to do business in Florida and acceptable to the AUTHORITY.

1. **General Liability** Insurance with bodily injury limits of not less than $1,000,000 for each occurrence, and with property damage limits of not less than $1,000,000 for each occurrence.

2. **Automobile Liability** Insurance with bodily injury limits of not less than $5,000,000 for each person and not less than $5,000,000 for each accident and with property damage limits of not less than $5,000,000 for each accident.

3. **Workers' Compensation** Insurance in accordance with statutory requirements and Employer's Liability Insurance with limits of not less than $500,000 for each accident, $500,000 for each disease, and $500,000 aggregate.

4. **Excess Liability** Insurance with limits of not less than $10,000,000 for each occurrence and annual aggregate.

4.2 Deductible amounts shall not exceed 5% of the total amount of required insurance in each category. Should any policy contain any unusual exclusions, said exclusions shall be so indicated on the certificate(s) of insurance.

4.3 CONTRACTOR shall furnish AUTHORITY **Certificates of Insurance**, which shall include a provision that policy cancellation, non-renewal or reduction of coverage will not be effective until at least **thirty (30) days** after written notice has been given to the AUTHORITY. CONTRACTOR shall include AUTHORITY as an

Additional Insured on the General Liability and Automobile Liability insurance policy required by this Agreement. All of CONTRACTOR'S subcontractors shall be required to include AUTHORITY and CONTRACTOR as **Additional Insureds** on all of their liability insurance policies.

4.4 CONTRACTOR shall ensure that CONTRACTOR's naming of the AUTHORITY as an additional insured on its General Liability and Automobile Liability insurance policies pursuant to this Agreement shall afford coverage for the negligent, reckless, intentionally wrongful or willful acts of CONTRACTOR and other persons employed or utilized by the CONTRACTOR in the performance of this Agreement.

4.5 In the event that subcontractors used by the CONTRACTOR do not have insurance, or do not meet the required insurance limits herein, CONTRACTOR shall indemnify and hold harmless the AUTHORITY for any claim(s) in excess of the subcontractor's insurance coverage.

4.6 The CONTRACTOR shall not commence work under this Agreement until all insurance required as stated herein has been obtained and such insurance has been approved by the AUTHORITY.

ARTICLE 5 - STANDARD OF CARE

5.1 The CONTRACTOR shall exercise the same degree of care, skill, and diligence in the performance of the Services performed pursuant to this Agreement as is ordinarily provided by comparable, qualified professionals under similar circumstances. The CONTRACTOR shall, at no additional cost to AUTHORITY, re-perform services which fail to satisfy the foregoing standard of care.

5.2 The CONTRACTOR warrants that all services shall be performed by skilled and competent personnel to the highest professional standards in the field.

ARTICLE 6 - INDEMNIFICATION

6.1 GENERAL

Having considered the risks and potential liabilities that may exist during the performance of the services and in consideration of the promises included herein, AUTHORITY and CONTRACTOR agree to allocate such liabilities in accordance with this Article 6.

6.2 INDEMNIFICATION

The CONTRACTOR shall indemnify and hold harmless the AUTHORITY, and its officers and employees, from all liabilities, damages, losses, and costs, including, but not limited to, reasonable attorney's fees, to the extent caused by the negligence, recklessness, or intentionally wrongful conduct of the CONTRACTOR and other persons employed or utilized by the CONTRACTOR in the performance of the Agreement.

6.3 SURVIVAL

Upon completion of all services, obligations and duties provided for in this Agreement, or in the event of termination of this Agreement for any reason, the terms and conditions of this Article shall survive.

ARTICLE 7 - INDEPENDENT CONTRACTOR

7.1 The CONTRACTOR is, and shall be, in the performance of all work services and activities performed under this Agreement, an Independent Contractor, and not an employee, agent, or servant of the AUTHORITY. All persons engaged in any of the work or services performed pursuant to this Agreement shall at all times, and in all places, be subject to the CONTRACTOR'S sole direction, supervision, and control. The CONTRACTOR shall exercise control over the means and manner in which it and its employees perform the work, and in all respects the CONTRACTOR'S relationship and the relationship of its employees to the AUTHORITY shall be that of an Independent Contractor and not as employees or agents of the AUTHORITY.

7.2 The CONTRACTOR does not have the power or authority to bind the AUTHORITY in any promise, agreement or representation other than specifically provided for in this Agreement.

ARTICLE 8 - AUTHORITY TO CONDUCT BUSINESS

The CONTRACTOR hereby represents and warrants that it has and will continue to maintain all licenses and approvals required to conduct its business and perform all requirements in this Agreement.

ARTICLE 9 - COMPLIANCE WITH LAWS

In performance of the Services, the CONTRACTOR will comply with applicable regulatory requirements including federal, state, special district, and local laws, rules, regulations, orders, codes, criteria, and standards.

ARTICLE 10 - SUB-CONTRACTING

10.1 The AUTHORITY reserves the right, in its sole and unfettered discretion, to accept the use of a subcontractor or to reject the selection of a particular subcontractor under this Agreement.

10.2 If a subcontractor fails to perform or make progress, as required by this Agreement, and it is necessary to replace the subcontractor to complete the work in a timely fashion, the CONTRACTOR shall promptly do so, subject to acceptance of the new subcontractor by the AUTHORITY.

ARTICLE 11 - FEDERAL AND STATE TAXES

The AUTHORITY is exempt from Federal Tax and State Sales and Use Taxes. Upon request, the AUTHORITY will provide an exemption certificate to CONTRACTOR. The CONTRACTOR shall not be exempted from paying sales tax to its suppliers for materials to fulfill contractual obligations with the AUTHORITY, nor shall the CONTRACTOR be authorized to use the AUTHORITY'S Tax Exemption Number in securing such materials.

ARTICLE 12 - AVAILABILITY OF FUNDS

The obligations of the AUTHORITY under this Agreement are subject to the availability of funds lawfully appropriated for its purpose by the Board of the Solid Waste Authority of Palm Beach County.

ARTICLE 13 - AUTHORITY'S RESPONSIBILITIES

AUTHORITY shall be responsible for providing access to all project sites, and providing information on hand required by CONTRACTOR, including existing reports, studies, financial information, and other required data that are available in the files of the AUTHORITY.

ARTICLE 14 - DEFAULT

14.1 The AUTHORITY may, by written notice of default to the CONTRACTOR, terminate the Agreement in whole or in part if the CONTRACTOR: a) fails to satisfactorily perform any provisions of this Agreement; or b) fails to make progress so as to endanger performance under the terms and conditions of this Agreement; or c) repeatedly fails to perform; or d) does not remedy any such failure within a period of ten (10) days (or such period as the Director of Purchasing Services may authorize in writing) after receipt of notice from the Director of Purchasing Services specifying such failure. In the event the AUTHORITY terminates this Agreement in whole or in part because of default of the CONTRACTOR, the AUTHORITY may, in its sole and unfettered discretion, procure goods and/or services similar to those required under this Agreement and the CONTRACTOR shall be liable for any excess costs incurred due to this action.

14.2 If it is determined that the CONTRACTOR was not in default or that the default was excusable (e.g., failure due to causes beyond the control of, or without the fault or negligence of the CONTRACTOR), the rights and obligations of the parties shall be those provided in Article 15 – Termination for Convenience.

ARTICLE 15 – TERMINATION FOR CONVENIENCE

15.1 The Director of Purchasing Services may, whenever the interests of the AUTHORITY so require, terminate this Agreement, in whole or in part, for the convenience of the AUTHORITY. The Director of Purchasing Services shall give five (5) business days prior written Notice of Termination to the CONTRACTOR, specifying the portions of the Agreement to be terminated and when the termination is to become effective. If only portions of the Agreement are terminated, the CONTRACTOR has the right to withdraw, without adverse action by the AUTHORITY, from the entire Agreement.

15.2 Unless directed differently in the Notice of Termination, the CONTRACTOR shall incur no further obligations in connection with the terminated work and shall stop work to the extent specified on the date given in the Notice of Termination. Additionally, unless directed differently, the CONTRACTOR shall terminate outstanding orders and/or subcontracts related to the terminated work.

15.3 Unless the CONTRACTOR is in breach of this Agreement, the CONTRACTOR shall be paid for services rendered to the AUTHORITY'S satisfaction through the date of termination.

ARTICLE 16 - UNCONTROLLABLE FORCES

16.1 Neither the AUTHORITY nor CONTRACTOR shall be considered to be in default of this Agreement if delays in or failure of performance shall be due to Uncontrollable Forces, the effect of which, by the exercise of reasonable diligence, the non-performing party could not avoid. The term "Uncontrollable Forces" shall mean any event which results in the prevention or delay of performance by a party of its obligations under this Agreement and which is beyond the reasonable control of the nonperforming party. It includes, but is not limited to fire, flood, earthquakes, storms, lightning, epidemic, pandemic, war, riot, civil disturbance, sabotage, and governmental actions.

16.2 Neither party shall, however, be excused from performance if nonperformance is due to forces which are preventable, removable, or remediable and which the nonperforming party could have, with the exercise of reasonable diligence, prevented, removed or remedied with reasonable dispatch. The non-performing party shall, within a reasonable time of being prevented or delayed from performance by an uncontrollable force, give written notice to the other party describing the circumstances and uncontrollable forces preventing continued performance of the obligations of this Agreement.

ARTICLE 17 – JURISDICTION, VENUE, WAIVER OF JURY TRIAL AND REMEDIES

This Agreement shall be governed by the laws of the State of Florida. Any and all legal action necessary to enforce the Agreement shall be in a State court of competent jurisdiction located exclusively in Palm Beach County. With the exception of the choice of law and venue provisions contained herein, no remedy conferred upon any party is intended to be exclusive of any other remedy, and each and every such remedy shall be cumulative and shall be in addition to every other remedy given hereunder or now or hereafter existing at law or in equity. No single or partial failure by any party to exercise any right, power, or remedy hereunder, shall preclude that party from exercising that right, power or remedy in the future. **THE AUTHORITY AND CONSULTANT FREELY AND VOLUNTARILY AGREE TO WAIVE ITS RESPECTIVE RIGHT TO A JURY TRIAL ON ANY ISSUE(S) SO TRIABLE.**

ARTICLE 18 – COMMERCIAL NON-DISCRIMINATION POLICY

As a condition of entering into this Agreement, the CONTRACTOR represents and warrants that it will comply with the AUTHORITY's Commercial Non-Discrimination Policy, as described in Section 6.3 of the AUTHORITY's Purchasing Manual, including subsequent amendments thereto, if any. As part of such compliance, the CONTRACTOR shall not discriminate on the basis of race, color, religion, ancestry or national origin, gender, age, marital status, familial status, sexual orientation, gender identity or expression, disability, or genetic information in the solicitation, selection, hiring or commercial treatment of subcontractors, vendors, suppliers, or commercial customers, nor shall the CONTRACTOR retaliate against any person for reporting instances of such discrimination. The CONTRACTOR shall provide equal opportunity for subcontractors, vendors and suppliers to participate in all of its public sector and private sector subcontracting and supply opportunities, provided that nothing contained in this clause shall prohibit or limit otherwise lawful efforts to remedy the effects of marketplace discrimination that have occurred or are occurring in the AUTHORITY's relevant marketplace in Palm Beach County. The CONTRACTOR understands and agrees that a material violation of this clause shall be considered a material breach of this Agreement and may result in termination of this Agreement, disqualification or debarment of the CONTRACTOR from participating in AUTHORITY contracts, or other sanctions. This clause is not enforceable by or for the benefit of, and creates no obligation to, any third party. The CONTRACTOR agrees and understands that the provisions of Section 6.3 of the AUTHORITY's Purchasing Manual are incorporated herein by reference and that the CONTRACTOR is familiar with the contents of same.

ARTICLE 19 - WAIVER

A waiver by either AUTHORITY or CONTRACTOR of any breach of this Agreement shall not be binding upon the waiving party unless such waiver is in writing. In the event of a written waiver, such a waiver shall not affect the waiving party's rights with respect to any other or further breach. The making or acceptance of a payment by either party with knowledge of the existence of a default or breach shall not operate or be construed to operate as a waiver of any subsequent default or breach.

ARTICLE 20 - SEVERABILITY

20.1 The invalidity, illegality, or unenforceability of any provision of this Agreement, or the occurrence of any event rendering any portion or provision of this Agreement void, shall in no way affect the validity or enforceability of any other portion or provision of the Agreement. Any void provision shall be deemed severed from the Agreement and the balance of the Agreement shall be construed and enforced as if the Agreement did not contain the particular portion or provision held to be void. The parties further agree to reform the Agreement to replace any stricken provision with a valid provision that comes as close as possible to the intent of the stricken provision.

20.2 The provisions of this section shall not prevent the entire Agreement from being void if a provision which is of the essence of the Agreement is determined to be void.

ARTICLE 21 - ENTIRETY OF AGREEMENT AND MODIFICATION

The AUTHORITY and the CONTRACTOR agree that this Agreement, including Exhibits, and matters incorporated by specific reference set forth the entire agreement between the parties, and that there are no promises or understandings other than those stated herein. This Agreement supersedes all prior agreements, contracts, proposals, representations, negotiations, letters or other communications between the AUTHORITY and CONTRACTOR pertaining to the services, whether written or oral. None of the provisions or terms and conditions contained in this Agreement may be added to, amended, modified, superseded or otherwise altered except by written instrument executed by the parties thereto.

ARTICLE 22 - SUCCESSORS AND ASSIGNS

AUTHORITY and CONTRACTOR each binds itself and its partners, successors, executors, administrators, assigns and legal representatives to the other party and its partners, successors, executors, administrators, assigns and legal representative. CONTRACTOR shall not assign this Agreement without the prior express written approval of the AUTHORITY in its sole discretion via executed amendment.

ARTICLE 23 - CONTINGENT FEES

The CONTRACTOR warrants that it has not employed or retained any company or person, other than a bona fide employee working solely for the CONTRACTOR to solicit or secure this Agreement and that it has not paid or agreed to pay any person, company, corporation, individual or firm, other than a bona fide employee working solely for the CONTRACTOR, any fee, commission, percentage, gift or any other consideration contingent upon or resulting from the award or making of this Agreement.

ARTICLE 24 - TRUTH-IN-NEGOTIATION CERTIFICATE

24.1 Execution of this Agreement by the CONTRACTOR shall act as the execution of a truth-in-negotiation certificate certifying that the wage rates and costs used to determine the compensation provided for in this Agreement are accurate, complete, and current as of the Effective Date of the Agreement.

24.2 The said rates and costs shall be adjusted to exclude any significant sums should the AUTHORITY determine that the rates and costs were increased due to inaccurate, incomplete or noncurrent wage rates or due to inaccurate representations of fees paid to outside consultants. The AUTHORITY shall exercise its rights under this 'Certificate" within one (1) year following payment.

ARTICLE 25 - OWNERSHIP OF DOCUMENTS

CONTRACTOR shall be required to cooperate with other consultants relative to providing information requested in a timely manner and in the specified form. Any and all documents, records, disks, original drawings, or other information shall become the property of the AUTHORITY for its use and/or distribution as may be deemed appropriate by the AUTHORITY in its sole and unfettered discretion.

ARTICLE 26 - PUBLIC RECORDS, ACCESS AND AUDITS

26.1 It is the intent of this Article to maintain compliance with the Florida Public Records Law, Ch. 119, Florida Statutes, as amended.

26.2 **DESIGNATED RECORDS CUSTODIAN CONTACT INFORMATION:**

IF THE CONTRACTOR HAS QUESTIONS REGARDING THE APPLICATION OF CHAPTER 119, FLORIDA STATUTES, THE CONTRACTOR'S DUTY TO PROVIDE PUBLIC RECORDS RELATING TO THIS AGREEMENT, CONTACT THE CUSTODIAN OF PUBLIC RECORDS AT:
RECORDS MANAGER
SOLID WASTE AUTHORITY OF PALM BEACH COUNTY
7501 NORTH JOG ROAD
WEST PALM BEACH, FL 33412
561-640-4000 EXT. 4606
RECORDSCUSTODIAN@SWA.ORG

26.3 The CONTRACTOR shall maintain records related to all charges, expenses, and costs incurred in estimating and performing the work, in accordance with the timeframes and classifications for records retention as per the General Records Schedule GS1-SL for State and Local Government Agencies (see: https://dos.myflorida.com/library-archives/records-management/general-records-schedules/) after completion or termination of this Contract. Upon AUTHORITY'S request, CONTRACTOR shall provide AUTHORITY with access to such records during normal business hours at a location within Palm Beach County for purposes of inspection or audit.

26.4 Notwithstanding anything herein to the contrary, the CONTRACTOR expressly acknowledges that: i) it is providing a specific service to the AUTHORITY in the performance of this Contract; ii) acting on behalf of the AUTHORITY in the performance of this Contract; iii) that it has read and is familiar with the Florida Public Records Law, Ch. 119, Florida Statutes, as amended, and both understand its responsibility and obligation to comply with this law; and iv) to the extent any question(s) arise regarding its duties to produce public records, it shall contact the Records Manager with same.

26.5 Any public records requests directed to, or related in any way to this contract shall be directed solely to the Records Manager. If the requested records are not in the possession of the Records Manager, they shall immediately notify the CONTRACTOR and the CONTRACTOR must provide the records or allow access to the records within a reasonable time. A CONTRACTOR who fails to provide the records to the public agency within a reasonable time may be subject to penalties under Florida Statutes (F.S) §119.10, and §119.10(2) provides that a person who willfully and knowingly violates the Public Records Act commits a misdemeanor of the first degree, which is punishable by up to a year in jail and a fine not to exceed $1,000.

26.6 Therefore, the CONTRACTOR is required to:

1) Keep and maintain public records that ordinarily and necessarily would be required by the AUTHORITY in order to perform the service;

2) Upon AUTHORITY's request from the AUTHORITY's Records Manager; provide the AUTHORITY with a copy of the requested records to allow the records to be inspected or copied within a reasonable time on the same terms and conditions that the AUTHORITY would provide the records at a cost that does not exceed the cost provided by Florida law;

3) Ensure that public records that are exempt or confidential and exempt from public records disclosure requirements are not disclosed except as authorized by law for the duration of the Agreement term and following the completion of the Agreement if the CONTRACTOR does not transfer the records to the AUTHORITY; and

4) Upon completion of the Agreement, transfer at no cost to the AUTHORITY, all public records in possession of the CONTRACTOR or keep and maintain public records to the AUTHORITY upon completion or termination of the Agreement; the CONTRACTOR shall destroy any duplicate public records that are exempt or confidential and exempt from public records disclosure requirements. If the CONTRACTOR keeps and maintains public records upon completion of the Agreement, the CONTRACTOR shall meet all applicable requirements for retaining public records. All records stored electronically must be provided to the AUTHORITY, upon request from the AUTHORITY's Records Manager, either during performance of the Agreement or after termination or completion of the Agreement in a format that is compatible with the information technology systems of the AUTHORITY.

26.7 Failure of the CONTRACTOR to comply with these requirements shall be a material breach of this Contract.

26.8 CONTRACTOR shall maintain financial and program records to justify all charges and costs incurred in performing the work for at least three (3) years following final payment by the AUTHORITY as Federal Emergency Management Agency (FEMA) sub-grantee as required by 2 CFR 200.333. The AUTHORITY shall have access to such books, records, and documents as required in this section for the purpose of inspection or audit.

26.9 In the event records retention requirements in Florida Statutes Chapter 119 and 257 exceed those of FEMA, the records shall be retained to comply with the State of Florida requirements.

ARTICLE 27 - INSPECTOR GENERAL

Palm Beach County has established the Office of the Inspector General (OIG), Ordinance No. 2009-049 which is authorized and empowered to review past, present and proposed county contracts, transactions, accounts and records. The AUTHORITY has entered into an Interlocal Agreement (ILA) for Inspector General Services. This agreement provides for the Inspector General to provide services to the AUTHORITY in accordance with the authority, functions and powers set out in the Palm Beach County Office of Inspector General Ordinance. All parties doing business with the AUTHORITY and receiving AUTHORITY funds shall fully cooperate with the Inspector General including providing access to records relating to this agreement. The Inspector General has the power to subpoena witnesses, administer oaths, require the production of records, and audit, investigate, monitor, and inspect the activities of the CONTRACTOR, its officers, agents, employees, and lobbyists in order to ensure compliance with contract specifications and detect corruption and fraud. Failure to cooperate with the Inspector General or interference or impeding any investigation shall be in violation of Ordinance 2009-049, and punished pursuant to Section 125.69, Florida Statutes, in the same manner as a second-degree misdemeanor.

ARTICLE 28 - NOTICE

Any notice, demand, communication, or request required or permitted hereunder shall be in writing and delivered in person or sent by certified mail, postage prepaid as follows:

AS TO AUTHORITY

Solid Waste Authority of Palm Beach County
7501 North Jog Road
West Palm Beach, Florida 33412

Attention: Executive Director
Office No.: 561-640-4000 Fax No.: 561-640-3400

AS TO CONTRACTOR

(Name of Contractor)
Address #1
Address #2
City/State/Zip Code

Attention: _____, TITLE
Office No.: _____ Fax No.: _____ E-Mail: _____

Notices shall be effective when received at the addresses as specified above. Changes in the respective addresses to which such notice is to be directed may be made from time to time by either party by written notice to the other party.

Facsimile transmission is acceptable notice effective when received, however, facsimile transmissions received (i.e.; printed) after 5:00 p.m. or on weekends or holidays, will be deemed received on the next business day. The original of the notice must additionally be mailed as required herein.

Nothing contained in this Article shall be construed to restrict the transmission of routine communications between representatives of CONTRACTOR and AUTHORITY.

ARTICLE 29 - CONTRACT ADMINISTRATION

Services of CONTRACTOR shall be under the general direction of the **Chief Operations Officer**, or designee, who shall act as the AUTHORITY'S representative during the term of the Agreement.

ARTICLE 30 - KEY PERSONNEL

CONTRACTOR shall notify AUTHORITY in the event of key personnel changes which might affect this Agreement. Notification shall be made within ten (10) days of said changes. AUTHORITY has the right to reject any proposed changes in key personnel. The following personnel shall be considered key personnel:

_____ – Project Manager
Cell No.: XXX-XXX-XXXX E-Mail: _____@_____.com

ARTICLE 31 – EQUAL BUSINESS OPPORTUNITY PROGRAM:

The Governing Board of the AUTHORITY has implemented the Economic Inclusion Policy administered by the Equal Business Opportunity (EBO) Program Office to ensure that all segments of its business population, including, but not limited to local, small, minority, and women-owned businesses, have an equitable opportunity to participate in the AUTHORITY'S procurement process, in accordance with Section 6.1 through 6.4 of the Purchasing Manual. Program tools and solicitation incentives are hereby referred to as the Affirmative Procurement Initiatives (API).

31.1 **Affirmative Procurement Initiative (API):**

The AUTHORITY has NOT applied an Affirmative Procurement Initiative to this Agreement.

ARTICLE 32 - SCRUTINIZED COMPANIES

32.1 As provided in F.S. 287.135, by entering into this Agreement or performing any work in furtherance hereof, the CONTRACTOR certifies that it, its affiliates, suppliers, subcontractors and consultants who will perform hereunder, have not been placed on the Scrutinized Companies With Activities in Sudan List or Scrutinized Companies With Activities in The Iran Petroleum Energy Sector List created pursuant to F.S. 215.473, or is engaged in business operations in Cuba or Syria.

If the AUTHORITY determines, using credible information available to the public, that a false certification has been submitted by CONTRACTOR, this Agreement may be terminated and a civil penalty equal to the greater of $2 million or twice the amount of this Agreement shall be imposed, pursuant to F.S. 287.135. Said certification must also be submitted at the time of renewal of this Agreement.

32.2 As provided in F.S. 287.135, by entering into this Agreement or performing any work in furtherance hereof, this Agreement certifies that it, its affiliates, suppliers, subcontractors, and consultants who will perform hereunder, have not been placed on the Scrutinized Companies that Boycott Israel List, or is engaged in a boycott of Israel, pursuant to F.S. 215.4725.
If the AUTHORITY determines, using credible information available to the public, that a false certification has been submitted by CONTRACTOR, this may be terminated and a civil penalty equal to the greater of $2 million or twice the amount of this shall be imposed, pursuant to F.S. 287.135. Said certification must also be submitted at the time of renewal of this Agreement.

ARTICLE 33 - AGREEMENTS WITH OTHER GOVERNMENTAL ENTITIES

33.1 The CONTRACTOR agrees that this Agreement constitutes an offer to all State and local government agencies of the State of Florida under the same terms and conditions, for the same prices and for the same effective period as specified in this Agreement should the CONTRACTOR deem it in the best interest of their business to do so.

33.2 The Agreement in no way restricts or interferes with any State or local government agencies of the State of Florida from re-solicitation.

ARTICLE 34 – THIRD PARTY BENEFICIARY DISCLAIMER

It is not the intention of these documents to create third party beneficiary status in any person or entity that is not a direct party to this Agreement, and no language in this Agreement should be construed or interpreted as creating a third party beneficiary**.**

ARTICLE 35 – E-VERIFY – EMPLOYMENT ELIGIBILITY

35.1 The CONTRACTOR certifies, warrants and represents that it is in compliance with Section 448.095, Florida Statutes, as may be amended and that CONTRACTOR shall: (1) register with and use the E-Verify System (E-Verify.gov) to electronically verify the employment eligibility of all newly hired workers; and (2) has verified that all of the CONTRACTOR'S subcontractors performing the duties and obligations of this Agreement are registered with and use the E-Verify System to electronically verify the employment eligibility of all newly hired workers. CONTRACTOR shall obtain from each of its subcontractors an affidavit stating that the subcontractor does not employ, contract with, or subcontract with an Unauthorized Alien, as that term is defined in Section 448.095(1)(k), Florida Statutes, as may be amended. CONTRACTOR shall maintain a copy of any such affidavit from a subcontractor for, at a minimum, the duration of the subcontract and any extension thereof. This provision shall not supersede any provision of this Agreement which requires a longer retention period.

35.2 AUTHORITY shall terminate this Agreement if it has a good faith belief that CONTRACTOR has knowingly violated Section 448.09(1), Florida Statutes, as may be amended. If AUTHORITY has a good faith belief that one of CONTRACTOR'S subcontractor(s) has knowingly violated Section 448.09(1), Florida Statutes, as may be amended, AUTHORITY shall notify CONTRACTOR to terminate its contract with the subcontractor and CONTRACTOR shall immediately terminate its contract with the subcontractor. If AUTHORITY terminates this Agreement pursuant to the above, CONTRACTOR shall be barred from being awarded a future contract by AUTHORITY for a period of one (1) year from the date on which the Agreement was terminated. In the event of such contract termination, CONTRACTOR shall also be liable for any additional costs incurred by AUTHORITY as a result of the termination.

ARTICLE 36 – CONFIDENTIALITY

No reports, information, computer programs, documentation, and/or data given to, or prepared or assembled by the CONTRACTOR under this Agreement shall be made available to any individual or organization by the CONTRACTOR without prior written approval of the AUTHORITY.

REMAINDER OF PAGE LEFT BLANK INTENTIONALLY

ARTICLE 37 – PAYMENT ADJUSTMENT SCHEDULE

37.1 The AUTHORITY acknowledges the fluctuating nature of prices.

37.2 Annual Non-Fuel: The Non-Fuel Adjustment shall be applied to those rates subject to adjustment and as provided within this Agreement. For the purpose of this Agreement, the Non-Fuel component is assumed to represent 90% of the CONTRACTOR's costs. Therefore, 90% of the approved rates shall be so adjusted:

The rates shall be adjusted as follows:

The rates shall be adjusted annually, commencing on the first anniversary date, by the change in the Water and Sewer and Trash Collection Services Index, Series ID CUSR0000SEHG, as published by the United States Department of Labor, Bureau of Labor Statistics (www.bls.gov). The change in the index shall be calculated by dividing the average of the index over the twelve-month period ending the December preceding the effective date of the adjustment (January – December 2022) by the average of the index over the twelve-month period from January 2021 through December 2021. The first Annual Non-Fuel adjustment shall be effective May 7, 2023 to May 6, 2024.

For example:

For the Contract year beginning May 7, 2023, the average of the index over the twelve-month period from January 2022 through December 2022 shall be divided by the average of the index over the twelve-month period from January 2021 through December 2021, multiplying the result by ninety (90) percent of the contract or AUTHORITY established price, and subtracting ninety (90) percent of the contract or AUTHORITY established price.

The surcharge/credit shall be rounded to the nearest cent.

Formula:

Most Recent Year Average / Prior Year Average x .90 x Rate – (.90 x Rate) = Annual Adjustment

Calendar:

Annual Payment Adjustment Calendar

April 2023	April 2024

Extension Clause Annual Payment Adjustment Schedule

April 2025	April 2026	April 2027

37.3 **Activation Fuel Adjustment (Fuel Surcharge/Credit)**

The rates subject to adjustment shall be subject to a fuel price surcharge/credit for fluctuations in the price of fuel. For the purpose of this Agreement, fuel is assumed to represent 10% of the Contractor's costs therefore 10% of the approved rates shall be so adjusted. Fuel adjustment shall be calculated and effective upon activation.

The rates shall be adjusted as follows:

For the rates subject to adjustment, a fuel surcharge/credit shall be charged/credited basis based on the

percentage change in the average price of fuel as published by the Oil Price Information Service (OPIS) and measured by the OPIS Standard Rack, OPIS No. 2 Distillate Gross Prices, Unbranded Average for Miami, Florida between the month of **January 2022 (Base)** and the most recent month available upon activation.

Fuel Adjustment does not use a floor or ceiling and provides adjustments in either direction without limit.

The surcharge/credit shall be rounded to the nearest cent.

Formula:

Most recent OPIS (at activation) / Base x .10 x Rate – (.10 x Rate) = Fuel Adjustment (for duration of activation)

For example:

Should activation occur October 2023, the fuel surcharge/credit shall be calculated by dividing the reported unbranded average price for September 2023 by the Base (unbranded average price for January 2022), multiplying the result by ten (10) percent of the contract or Authority established price, and subtracting ten (10) percent of the contract or Authority established price.

37.4 In the event that either of these indices is no longer available, the parties shall mutually agree to a replacement index. The value of the adjustment will be determined by the AUTHORITY.

ARTICLE 38 – ORDER OF AGREEMENT ACTIVATION/LOCATION ASSIGNMENT

The CONTRACTOR has entered into a contingent Agreement with the AUTHORITY for Hurricane/Disaster Debris Removal, Reduction, and Disposal. The Agreement awarded will be activated on an as-needed basis as solely determined by the AUTHORITY. The AUTHORITY intends to activate the CONTRACTOR in the order of the Selection Committee ranking, as best meets the needs of the AUTHORITY. The AUTHORITY reserves the sole and unfettered right to assign/reassign any or all CONTRACTORS at any time as may be deemed appropriate depending upon the circumstance(s), the event, or any other condition which may warrant such action.

ARTICLE 39 – TASK ORDER/PERFORMANCE

Task Orders shall be executed bilaterally, and the scope of services and format of Task Orders shall be mutually agreed to by the CONTRACTOR and AUTHORITY. Performance will be measured by the metrics established in each Task Order. After 1/3 and again after 2/3 of the stipulated number of days of work in the Task Order have elapsed, the CONTRACTOR(S) shall provide a written progress report to the AUTHORITY for review and acceptance. The AUTHORITY shall have the right to correct for CONTRACTOR default or underperformance by any means it deems in its best interest. CONTRACTOR will be required to provide a daily report of quantity of work performed under each Task Order. The daily report shall be submitted by 11:00 a.m. or earlier the following morning.

ARTICLE 40 – BONDS

CONTRACTOR shall maintain a Proposal Bond in the sum of $500,000. The CONTRACTOR's Proposal Bond will be returned to the CONTRACTOR in exchange for and acceptance of an appropriate size bond as determined by the AUTHORITY after assessment of damage and definition of the CONTRACTOR's scope of service. In case of hurricane caused damage, a Category 1 storm would require a $2,000,000 Bond, a Category II would require a $4,000,000 Bond, a Category III would require a $6,000,000 Bond, a Category IV would require an $8,000,000 Bond, and a Category V would require a $10,000,000 Bond. The Bond required would be a Performance and Payment Bond, Attachment H. The cost of the Bond is included in the unit rates in the Fee Schedule, Exhibit B. The CONTRACTOR shall maintain the Proposal Bond in effect until the Performance and Payment Bond is submitted to and accepted by the AUTHORITY. If the CONTRACTOR fails to supply a Performance and Payment Bond, the AUTHORITY shall be entitled to retain the Proposal Bond to rectify the CONTRACTOR's unacceptable performance. Pending successful annual CONTRACTOR recertification, the Proposal Bond shall be in effect for the entire term of the Agreement, except for period(s) of time

when a Performance and Payment Bond is in effect.

ARTICLE 41 – FLORIDA HIGHWAY ADMINISTRATION (FHWA) FORM 1273

41.1 This Agreement incorporates all of the provisions set forth in the document commonly known as FHWA Form 1273, Attachment F, which is attached hereto and incorporated by reference as part of this Agreement. The term "contractor" as used in Attachment F shall apply to and mean the CONTRACTOR who may be referred to in Attachment F as the "prime contractor", "bidder", "proposer", "prospective primary participant", "prospective participant", "participant" or the like. The CONTRACTOR will perform the duties and obligations of the other contracting party regardless of the description or label used in Form 1273, Attachment F.

41.2 The CONTRACTOR shall comply with the Davis-Bacon wages rates to the extent applicable to the work performed under this Agreement. The provisions of the Davis-Bacon Act do not apply to debris removal work unless such work is done in conjunction with a construction project or "linked" to a particular Federal Highway. Wage rate tables may be found at http://www.dot.state.fl.us/construction/wage.shtm. Said wage rate tables are incorporated into and made part of this Agreement by reference.

ARTICLE 42 – BUY AMERICA REQUIREMENTS

The CONTRACTOR agrees to comply with the requirements of the Federal Buy America law (See 23 U.S.C. 313, ISTEA Sections 1041(a) and 1048(a), as they may be amended from time to time) as they relate to Federal-aid contracts and the use of steel and iron produced in the United States. A description of the requirements of Buy America is set forth in Attachment G, which is attached hereto and incorporated by reference as part of this Agreement. CONTRACTOR shall provide a certification statement regarding the origin of all materials or products covered under the Buy America provisions and used in its performance of the Agreement in accordance with the requirements of law and the AUTHORITY, FDOT, and FEMA, to the extent applicable.

ARTICLE 43 – DISADVANTAGED BUSINESS ENTERPRISES

43.1 This provision shall supplement Article 31 "Equal Business Opportunity Program" of the Agreement. The Agreement is subject to the requirements of 49 CFR Part 26. The CONTRACTOR shall not discriminate on the basis of race, color, national origin, or sex in the performance of the Agreement. The CONTRACTOR shall carry out the applicable requirements of 49 CFR Part 26 in the award and administration of this U.S. DOT-assisted contract. Failure by the CONTRACTOR to carry out these requirements is a material breach of Agreement, which may result in the termination of this Agreement or such other remedy as the AUTHORITY deems appropriate, including but not limited to the withholding of payments. Each subcontract the CONTRACTOR signs with a subcontractor must include the assurance in this paragraph. (See 49 CFR 26.13). Upon request, the CONTRACTOR will provide the AUTHORITY with a copy of each subcontract it enters into.

43.2 The CONTRACTOR is required to pay its subcontractors performing work related to this Agreement for satisfactory performance of that work no later than thirty (30) days after the CONTRACTOR's receipt of payment for that work from the AUTHORITY. The CONTRACTOR may not hold any retainage from its subcontractors unless pursuant to an agreement approved by the AUTHORITY. The CONTRACTOR shall return all retainage payments withheld within thirty (30) days after the subcontractor's work has been satisfactorily completed.

43.3 The CONTRACTOR shall, on a monthly basis, submit payment certifications, including a certification regarding their truth and accuracy, for all payments it is seeking and certifications from all subcontractors indicating who has been paid and how. The certifications shall comply with all Federal and State requirements regarding the reporting of DBE participation. The CONTRACTOR shall, if required by the AUTHORITY or FDOT, report its DBE participation monthly on the Equal Opportunity Reporting System located on the Florida Department of Transportation's (FDOT) website found at www.bipincwebapps.com/bizwebflorida/. Audits

may be conducted to review payments to DBE subcontractors. The CONTRACTOR will fully cooperate with the AUTHORITY, FDOT, or FEMA regarding the monitoring of subcontractors and payments made thereto.

ARTICLE 44 – CERTIFICATION REGARDING SUSPENSION AND DEBARMENT

44.1 This Agreement is a covered transaction for purposes of 49 CFR Part 29. Accordingly, the CONTRACTOR shall verify that neither the CONTRACTOR, nor its principals, as defined at 49 CFR 29.995, or affiliates, as defined at 49 CFR 29.905, are excluded or disqualified from participation in this Agreement as defined at 49 CFR 29.940 and 29.945.

44.2 The CONTRACTOR agrees to comply with the requirements of 49 CFR 29, Subpart C throughout the term of this Agreement. The CONTRACTOR must include the requirement to comply with 49 CFR 29, Subpart C in any lower tier covered transaction it enters into. CONTRACTOR's certification is a material representation of fact relied upon by the AUTHORITY. If it is later determined that the CONTRACTOR knowingly rendered an erroneous certification, in addition to remedies available to the AUTHORITY, the State or Federal government may pursue any available remedies, including but not limited to suspension and/or debarment. The CONTRACTOR further agrees that it will include a provision requiring such compliance in all of its subcontracts or lower tier covered transactions.

ARTICLE 45 – ACCESS TO RECORDS AND THEIR RETENTION

45.1 This provision shall supplement Article 26 of this Agreement. The CONTRACTOR shall maintain adequate records to justify all charges, expenses, and costs incurred in estimating and performing the Agreement for at least five (5) years after completion or termination of this Agreement or FDOT's closure of an "emergency event" with the Florida Division of Emergency Management, whichever comes last, except in the event of litigation or settlement of claims arising from the performance of the Agreement, the CONTRACTOR agrees to maintain said records until all litigation, claims, appeals or exceptions related thereto have been resolved. The records shall be maintained at a location in Palm Beach County, Florida or such other location in Florida approved by the AUTHORITY.

45.2 The CONTRACTOR shall make all of its books, records, and other documents related, in any manner to its or its subcontractors' performance of the Agreement, available to the AUTHORITY and any other funding entity (e.g. FDOT, FEMA, the Comptroller General of the U.S. or any of their authorized representatives) for the purpose of examination, audit, reproduction, excerpts and transcripts, during normal business hours, at the CONTRACTOR's place of business or if CONTRACTOR's place of business is not located in Palm Beach County, then at the location for maintenance of records referenced above. The CONTRACTOR shall also require its subcontractors to make their books, records and documents available for examination, audit, reproduction, excerpts, and transcripts, for the same duration and in the same manner, and at or near the same locations required herein of CONTRACTOR.

ARTICLE 46 – AUDIT REQUIREMENTS

This provision shall supplement Article 26 of this Agreement. The CONTRACTOR agrees that audits may be undertaken of its records related to its performance of the Agreement as may be authorized or required under OMB Circular A-133, as revised. The CONTRACTOR agrees that it will comply and fully cooperate with the AUTHORITY and any State and/or Federal funding agency(ies), including but not limited to FDOT, Florida's Auditor General, FEMA, or any of their authorized representatives, in any audit or monitoring procedures or processes any such entity(ies) may undertake related to CONTRACTOR's performance of the Agreement.

ARTICLE 47 – NATIONAL ENVIRONMENTAL POLICY ACT (NEPA)

The CONTRACTOR shall cooperate with the AUTHORITY, FDOT, and FEMA so as to assure that all activities related to the performance of this Agreement comply with the requirements of the National NEPA of 1969, as amended, and the regulations and guidance related thereto.

ARTICLE 48 – AMERICANS WITH DISABILITIES ACT

The CONTRACTOR does hereby represent and certify that it will comply with all the requirements of the Americans with Disabilities Act of 1990 (42 USC 12102, et seq.), as it may be amended, and all applicable impending regulations of the U.S. DOT, FEMA, and other Federal-aid agencies.

ARTICLE 49 – COMPLIANCE WITH TITLE VI, TITLE VII, AND OTHER FEDERAL LAWS AND REGULATIONS

The CONTRACTOR does hereby represent and certify that it will comply with all the requirements imposed by Title VI of the Civil Rights Act of 1964 and Title VII of the Civil Rights Act of 1968, as they have been and may be modified from time to time (42 USC 2000d et. Seq. and 3601 et seq.) and the Age Discrimination and Employment Act of 1967 and Section 303 of the Age Discrimination Act of 1975, as amended (42 USC 6102), and all applicable Federal laws and regulations, policies, procedures, and directives of the U.S.DOT, FEMA and/or other Federal-aid agencies, as they may be promulgated and amended from time to time.

ARTICLE 50 – CONVICT LABOR PROHIBITION

The CONTRACTOR does hereby represent and certify that it will comply with the convict labor prohibition in 23 U.S.C. 114, and all implementing regulations thereto.

ARTICLE 51 – CERTIFICATION REGARDING LOBBYING ACTIVITIES

A Bidder or Proposer for an award of certain Federal-Aid contracts in the amount of $100,000 or more, must file the certification required by 49 CFR Part 2. The CONTRACTOR confirms that by signing and submitting a Bid or Proposal for the work covered by this Agreement, it made the certification described in Section X1 of the Attachment F herein.

ARTICLE 52 – DEPARTMENT OF HOMELAND SECURITY (DHS) SEAL, LOGO, AND FLAGS

The CONTRACTOR shall not use the DHS seal(s), logos, crests, or reproductions of flags or likenesses of DHS agency officials without specific FEMA pre-approval.

ARTICLE 53 – NO OBLIGATION BY FEDERAL GOVERNMENT

The Federal Government is not a party to this Agreement and is not subject to any obligations or liabilities to the AUTHORITY, CONTRACTOR, or any other party pertaining to any matter resulting from this Agreement.

ARTICLE 54 – PROGRAM FRAUD AND FALSE OR FRAUDULENT STATEMENTS OR RELATED ACTS

The CONTRACTOR acknowledges that 31 U.S.C Chapter 38 (Administrative Remedies for False Claims and Statements) applies to the CONTRACTOR's actions pertaining to this Agreement.

REMAINDER OF PAGE LEFT BLANK INTENTIONALLY

In Witness Whereof, AUTHORITY, and CONTRACTOR have made and executed this Agreement all as of the day and year first above written.

SOLID WASTE AUTHORITY OF PALM BEACH COUNTY:

WITNESS:

1. _____

2. _____

By: _____
Daniel Pellowitz
Executive Director

(SEAL)

APPROVED AS TO LEGAL SUFFICIENCY:

By: _____
Howard J. Falcon, III
General Counsel

APPROVED AS TO TERMS AND CONDITIONS:

_____
Signature

_____
Print Name

_____
Title

ATTEST:

_____
Corporate Secretary

WITNESS:

1. _____

2. _____

CONTRACTOR:

_____
Authorized Signature

_____
Print Name

_____
Title

_____
Date

(Affix Corporate Seal)

SCOPE OF WORK

EXHIBIT "B"

FEE SCHEDULE

ATTACHMENTS CONTINUED

ATTACHMENT "B"

SOLID WASTE AUTHORITY
OF PALM BEACH COUNTY

7501 North Jog Road
West Palm Beach, Florida 33412
Telephone: 561-640-4000 • Fax: 561-640-3400

TASK ORDER
DISASTER DEBRIS MANAGEMENT

TO_____
Task Order No.

In accordance with _____(Contractor) contract, with the Solid Waste Authority of PBC, Florida, (AUTHORITY) Agreement No._____ for Hurricane/Disaster Debris Removal, Reduction, and Disposal dated _____ the AUTHORITY hereby requests and authorizes the services to be performed on the project as described below:

Project: _____

Specific Work to be performed: _____

Duration of Work (Include Start Date, End Date and Total Calendar Days): _____

Method of Payment: _____

Estimated Cost of this Task Order: $_____

Contractor Signature: _____ Date: _____

AUTHORITY Signature: _____ Date: _____

SWA Use Only					
SWA Requestor/Monitor:				Date:	
SWA Dept. Director:				Date:	
Vendor No.:		Account No.:		Project:	
Purchasing:		Budget:		Accounting:	

ATTACHMENT "C"
PRE-APPROVED TEMPORARY DEBRIS MANAGEMENT SITES MAP

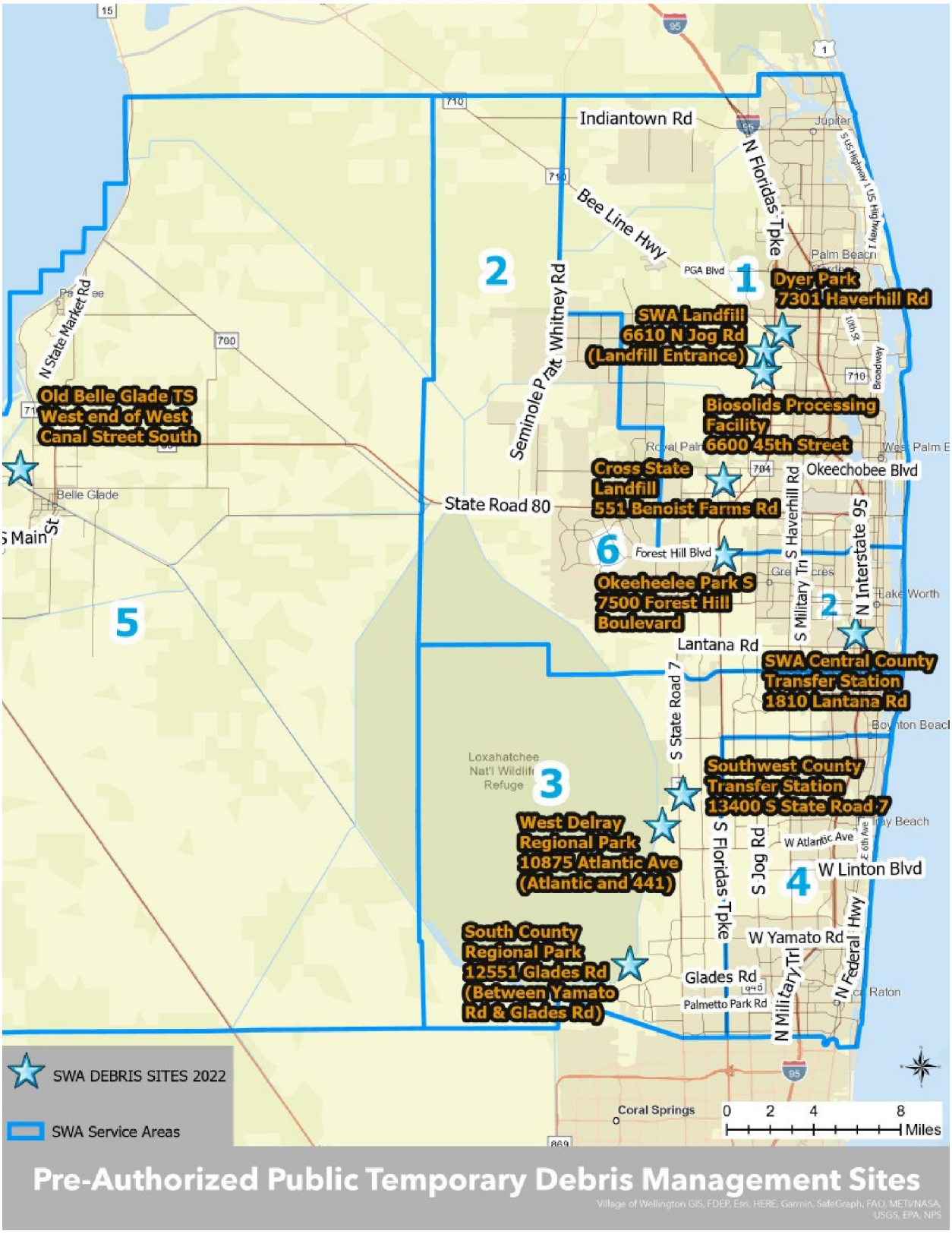

ATTACHMENT "D"

PUBLIC ASSISTANCE PROGRAM AND POLICY GUIDE

The Public Assistance Program and Policy Guide, Version 4, Effective June 1, 2020 (see hyperlink below) is the most recent reference material that will provide additional information:
https://www.fema.gov/sites/default/files/documents/fema_pappg-v4-updated-links_policy_6-1-2020.pdf

PROJECT MANAGEMENT

Project management begins when a disaster occurs and does not end until an applicant has received final payment for the project. Good project management ensures successful recovery from the disaster, expedited payment of funds, and more efficient close-outs of PA Program grants.

Record Keeping

It is critical that the applicant establish and maintain accurate records of events and expenditures related to disaster recovery work. The information required for documentation describes the "who, what, when, where, why, and how much" for each item of disaster recovery work. The applicant should have a financial and record keeping system in place that can be used to track these elements. The importance of maintaining a complete and accurate set of records for each project cannot be over-emphasized. Good documentation facilitates the project formulation, validation, approval, and funding processes.

All of the documentation pertaining to a project should be filed with the corresponding *PW* and maintained by the applicant as the permanent record of the project. These records become the basis for verification of the accuracy of project cost estimates during validation of small projects, reconciliation of costs for large projects, and audits.

Applicants should begin the record keeping process before a disaster is declared by the President. To ensure that work performed both before and after a disaster declaration is well documented, potential applicants should:

- designate a person to coordinate the compilation and filing of records;
- establish a file for each site where work has been or will be performed; and
- maintain accurate disbursement and accounting records to document the work performed and the costs incurred.

The Federal Office of Management and Budget requires grant recipients to maintain financial and program records on file for three years following final payment. Records of grant recipients may be subject to the provisions of the Single Audit Act, as described on page 117 of this guide. Applicants may refer to the Applicant Handbook, FEMA 323, for additional information regarding record-keeping.

ATTACHMENT "E"

MOBILIZATION SCHEDULE

CONTRACTOR shall commence mobilization of equipment, operators, and laborers immediately upon receipt of a Mobilization Task Order to meet the progress pattern set below.

	Category 1 & 2	Category 3	Category 4	Category 5
Within 24 hours	25%	25%	20%	15%
Within 48 hours	30%	30%	30%	25%
Within 72 hours	40%	40%	40%	40%
Within 96 hours	60%	60%	50%	50%
Within 5 days	100%	80%	60%	60%
Within 10 days		100%	80%	70%
Within 14 days			100%	80%
Within 20 days				100%

ATTACHMENT "F"

FHWA-1273

FHWA-1273 – Revised May 1, 2012

REQUIRED CONTRACT PROVISIONS
FEDERAL-AID CONSTRUCTION CONTRACTS

I. General
II. Nondiscrimination
III. Nonsegregated Facilities
IV. Davis-Bacon and Related Act Provisions
V. Contract Work Hours and Safety Standards Act Provisions
VI. Subletting or Assigning the Contract
VII. Safety: Accident Prevention
VIII. False Statements Concerning Highway Projects
IX. Implementation of Clean Air Act and Federal Water Pollution Control Act
X. Compliance with Governmentwide Suspension and Debarment Requirements
XI. Certification Regarding Use of Contract Funds for Lobbying

ATTACHMENTS

A. Employment and Materials Preference for Appalachian Development Highway System or Appalachian Local Access Road Contracts (included in Appalachian contracts only)

I. GENERAL

1. Form FHWA-1273 must be physically incorporated in each construction contract funded under Title 23 (excluding emergency contracts solely intended for debris removal). The contractor (or subcontractor) must insert this form in each subcontract and further require its inclusion in all lower tier subcontracts (excluding purchase orders, rental agreements and other agreements for supplies or services).

The applicable requirements of Form FHWA-1273 are incorporated by reference for work done under any purchase order, rental agreement or agreement for other services. The prime contractor shall be responsible for compliance by any subcontractor, lower-tier subcontractor or service provider.

Form FHWA-1273 must be included in all Federal-aid design-build contracts, in all subcontracts and in lower tier subcontracts (excluding subcontracts for design services, purchase orders, rental agreements and other agreements for supplies or services). The design-builder shall be responsible for compliance by any subcontractor, lower-tier subcontractor or service provider.

Contracting agencies may reference Form FHWA-1273 in bid proposal or request for proposal documents, however, the Form FHWA-1273 must be physically incorporated (not referenced) in all contracts, subcontracts and lower-tier subcontracts (excluding purchase orders, rental agreements and other agreements for supplies or services related to a construction contract).

2. Subject to the applicability criteria noted in the following sections, these contract provisions shall apply to all work performed on the contract by the contractor's own organization and with the assistance of workers under the contractor's immediate superintendence and to all work performed on the contract by piecework, station work, or by subcontract.

3. A breach of any of the stipulations contained in these Required Contract Provisions may be sufficient grounds for withholding of progress payments, withholding of final payment, termination of the contract, suspension / debarment or any other action determined to be appropriate by the contracting agency and FHWA.

4. Selection of Labor: During the performance of this contract, the contractor shall not use convict labor for any purpose within the limits of a construction project on a Federal-aid highway unless it is labor performed by convicts who are on parole, supervised release, or probation. The term Federal-aid highway does not include roadways functionally classified as local roads or rural minor collectors.

II. NONDISCRIMINATION

The provisions of this section related to 23 CFR Part 230 are applicable to all Federal-aid construction contracts and to all related construction subcontracts of $10,000 or more. The provisions of 23 CFR Part 230 are not applicable to material supply, engineering, or architectural service contracts.

In addition, the contractor and all subcontractors must comply with the following policies: Executive Order 11246, 41 CFR 60, 29 CFR 1625-1627, Title 23 USC Section 140, the Rehabilitation Act of 1973, as amended (29 USC 794), Title VI of the Civil Rights Act of 1964, as amended, and related regulations including 49 CFR Parts 21, 26 and 27; and 23 CFR Parts 200, 230, and 633.

The contractor and all subcontractors must comply with: the requirements of the Equal Opportunity Clause in 41 CFR 60-1.4(b) and, for all construction contracts exceeding $10,000, the Standard Federal Equal Employment Opportunity Construction Contract Specifications in 41 CFR 60-4.3.

Note: The U.S. Department of Labor has exclusive authority to determine compliance with Executive Order 11246 and the policies of the Secretary of Labor including 41 CFR 60, and 29 CFR 1625-1627. The contracting agency and the FHWA have the authority and the responsibility to ensure compliance with Title 23 USC Section 140, the Rehabilitation Act of 1973, as amended (29 USC 794), and Title VI of the Civil Rights Act of 1964, as amended, and related regulations including 49 CFR Parts 21, 26 and 27; and 23 CFR Parts 200, 230, and 633.

The following provision is adopted from 23 CFR 230, Appendix A, with appropriate revisions to conform to the U.S. Department of Labor (US DOL) and FHWA requirements.

1. **Equal Employment Opportunity**: Equal employment opportunity (EEO) requirements not to discriminate and to take affirmative action to assure equal opportunity as set forth under laws, executive orders, rules, regulations (28 CFR 35, 29 CFR 1630, 29 CFR 1625-1627, 41 CFR 60 and 49 CFR 27) and orders of the Secretary of Labor as modified by the provisions prescribed herein, and imposed pursuant to 23 U.S.C. 140 shall constitute the EEO and specific affirmative action standards for the contractor's project activities under

this contract. The provisions of the Americans with Disabilities Act of 1990 (42 U.S.C. 12101 et seq.) set forth under 28 CFR 35 and 29 CFR 1630 are incorporated by reference in this contract. In the execution of this contract, the contractor agrees to comply with the following minimum specific requirement activities of EEO:

a. The contractor will work with the contracting agency and the Federal Government to ensure that it has made every good faith effort to provide equal opportunity with respect to all of its terms and conditions of employment and in their review of activities under the contract.

b. The contractor will accept as its operating policy the following statement:

"It is the policy of this Company to assure that applicants are employed, and that employees are treated during employment, without regard to their race, religion, sex, color, national origin, age or disability. Such action shall include: employment, upgrading, demotion, or transfer; recruitment or recruitment advertising; layoff or termination; rates of pay or other forms of compensation; and selection for training, including apprenticeship, pre-apprenticeship, and/or on-the-job training."

2. EEO Officer: The contractor will designate and make known to the contracting officers an EEO Officer who will have the responsibility for and must be capable of effectively administering and promoting an active EEO program and who must be assigned adequate authority and responsibility to do so.

3. Dissemination of Policy: All members of the contractor's staff who are authorized to hire, supervise, promote, and discharge employees, or who recommend such action, or who are substantially involved in such action, will be made fully cognizant of, and will implement, the contractor's EEO policy and contractual responsibilities to provide EEO in each grade and classification of employment. To ensure that the above agreement will be met, the following actions will be taken as a minimum:

a. Periodic meetings of supervisory and personnel office employees will be conducted before the start of work and then not less often than once every six months, at which time the contractor's EEO policy and its implementation will be reviewed and explained. The meetings will be conducted by the EEO Officer.

b. All new supervisory or personnel office employees will be given a thorough indoctrination by the EEO Officer, covering all major aspects of the contractor's EEO obligations within thirty days following their reporting for duty with the contractor.

c. All personnel who are engaged in direct recruitment for the project will be instructed by the EEO Officer in the contractor's procedures for locating and hiring minorities and women.

d. Notices and posters setting forth the contractor's EEO policy will be placed in areas readily accessible to employees, applicants for employment and potential employees.

e. The contractor's EEO policy and the procedures to implement such policy will be brought to the attention of employees by means of meetings, employee handbooks, or other appropriate means.

4. Recruitment: When advertising for employees, the contractor will include in all advertisements for employees the notation: "An Equal Opportunity Employer." All such advertisements will be placed in publications having a large circulation among minorities and women in the area from which the project work force would normally be derived.

a. The contractor will, unless precluded by a valid bargaining agreement, conduct systematic and direct recruitment through public and private employee referral sources likely to yield qualified minorities and women. To meet this requirement, the contractor will identify sources of potential minority group employees, and establish with such identified sources procedures whereby minority and women applicants may be referred to the contractor for employment consideration.

b. In the event the contractor has a valid bargaining agreement providing for exclusive hiring hall referrals, the contractor is expected to observe the provisions of that agreement to the extent that the system meets the contractor's compliance with EEO contract provisions. Where implementation of such an agreement has the effect of discriminating against minorities or women, or obligates the contractor to do the same, such implementation violates Federal nondiscrimination provisions.

c. The contractor will encourage its present employees to refer minorities and women as applicants for employment. Information and procedures with regard to referring such applicants will be discussed with employees.

5. Personnel Actions: Wages, working conditions, and employee benefits shall be established and administered, and personnel actions of every type, including hiring, upgrading, promotion, transfer, demotion, layoff, and termination, shall be taken without regard to race, color, religion, sex, national origin, age or disability. The following procedures shall be followed:

a. The contractor will conduct periodic inspections of project sites to insure that working conditions and employee facilities do not indicate discriminatory treatment of project site personnel.

b. The contractor will periodically evaluate the spread of wages paid within each classification to determine any evidence of discriminatory wage practices.

c. The contractor will periodically review selected personnel actions in depth to determine whether there is evidence of discrimination. Where evidence is found, the contractor will promptly take corrective action. If the review indicates that the discrimination may extend beyond the actions reviewed, such corrective action shall include all affected persons.

d. The contractor will promptly investigate all complaints of alleged discrimination made to the contractor in connection with its obligations under this contract, will attempt to resolve such complaints, and will take appropriate corrective action within a reasonable time. If the investigation indicates that the discrimination may affect persons other than the complainant, such corrective action shall include such other persons. Upon completion of each investigation, the contractor will inform every complainant of all of their avenues of appeal.

6. Training and Promotion:

a. The contractor will assist in locating, qualifying, and increasing the skills of minorities and women who are

applicants for employment or current employees. Such efforts should be aimed at developing full journey level status employees in the type of trade or job classification involved.

b. Consistent with the contractor's work force requirements and as permissible under Federal and State regulations, the contractor shall make full use of training programs, i.e., apprenticeship, and on-the-job training programs for the geographical area of contract performance. In the event a special provision for training is provided under this contract, this subparagraph will be superseded as indicated in the special provision. The contracting agency may reserve training positions for persons who receive welfare assistance in accordance with 23 U.S.C. 140(a).

c. The contractor will advise employees and applicants for employment of available training programs and entrance requirements for each.

d. The contractor will periodically review the training and promotion potential of employees who are minorities and women and will encourage eligible employees to apply for such training and promotion.

7. Unions: If the contractor relies in whole or in part upon unions as a source of employees, the contractor will use good faith efforts to obtain the cooperation of such unions to increase opportunities for minorities and women. Actions by the contractor, either directly or through a contractor's association acting as agent, will include the procedures set forth below:

a. The contractor will use good faith efforts to develop, in cooperation with the unions, joint training programs aimed toward qualifying more minorities and women for membership in the unions and increasing the skills of minorities and women so that they may qualify for higher paying employment.

b. The contractor will use good faith efforts to incorporate an EEO clause into each union agreement to the end that such union will be contractually bound to refer applicants without regard to their race, color, religion, sex, national origin, age or disability.

c. The contractor is to obtain information as to the referral practices and policies of the labor union except that to the extent such information is within the exclusive possession of the labor union and such labor union refuses to furnish such information to the contractor, the contractor shall so certify to the contracting agency and shall set forth what efforts have been made to obtain such information.

d. In the event the union is unable to provide the contractor with a reasonable flow of referrals within the time limit set forth in the collective bargaining agreement, the contractor will, through independent recruitment efforts, fill the employment vacancies without regard to race, color, religion, sex, national origin, age or disability; making full efforts to obtain qualified and/or qualifiable minorities and women. The failure of a union to provide sufficient referrals (even though it is obligated to provide exclusive referrals under the terms of a collective bargaining agreement) does not relieve the contractor from the requirements of this paragraph. In the event the union referral practice prevents the contractor from meeting the obligations pursuant to Executive Order 11246, as amended, and these special provisions, such contractor shall immediately notify the contracting agency.

8. Reasonable Accommodation for Applicants / Employees with Disabilities: The contractor must be familiar with the requirements for and comply with the Americans with Disabilities Act and all rules and regulations established there under. Employers must provide reasonable accommodation in all employment activities unless to do so would cause an undue hardship.

9. Selection of Subcontractors, Procurement of Materials and Leasing of Equipment: The contractor shall not discriminate on the grounds of race, color, religion, sex, national origin, age or disability in the selection and retention of subcontractors, including procurement of materials and leases of equipment. The contractor shall take all necessary and reasonable steps to ensure nondiscrimination in the administration of this contract.

a. The contractor shall notify all potential subcontractors and suppliers and lessors of their EEO obligations under this contract.

b. The contractor will use good faith efforts to ensure subcontractor compliance with their EEO obligations.

10. Assurance Required by 49 CFR 26.13(b):

a. The requirements of 49 CFR Part 26 and the State DOT's U.S. DOT-approved DBE program are incorporated by reference.

b. The contractor or subcontractor shall not discriminate on the basis of race, color, national origin, or sex in the performance of this contract. The contractor shall carry out applicable requirements of 49 CFR Part 26 in the award and administration of DOT-assisted contracts. Failure by the contractor to carry out these requirements is a material breach of this contract, which may result in the termination of this contract or such other remedy as the contracting agency deems appropriate.

11. Records and Reports: The contractor shall keep such records as necessary to document compliance with the EEO requirements. Such records shall be retained for a period of three years following the date of the final payment to the contractor for all contract work and shall be available at reasonable times and places for inspection by authorized representatives of the contracting agency and the FHWA.

a. The records kept by the contractor shall document the following:

(1) The number and work hours of minority and non-minority group members and women employed in each work classification on the project;

(2) The progress and efforts being made in cooperation with unions, when applicable, to increase employment opportunities for minorities and women; and

(3) The progress and efforts being made in locating, hiring, training, qualifying, and upgrading minorities and women;

b. The contractors and subcontractors will submit an annual report to the contracting agency each July for the duration of the project, indicating the number of minority, women, and non-minority group employees currently engaged in each work classification required by the contract work. This information is to be reported on Form FHWA-1391. The staffing data should represent the project work force on board in all or any part of the last payroll period preceding the end of July. If on-the-job training is being required by special provision, the contractor

will be required to collect and report training data. The employment data should reflect the work force on board during all or any part of the last payroll period preceding the end of July.

III. NONSEGREGATED FACILITIES

This provision is applicable to all Federal-aid construction contracts and to all related construction subcontracts of $10,000 or more.

The contractor must ensure that facilities provided for employees are provided in such a manner that segregation on the basis of race, color, religion, sex, or national origin cannot result. The contractor may neither require such segregated use by written or oral policies nor tolerate such use by employee custom. The contractor's obligation extends further to ensure that its employees are not assigned to perform their services at any location, under the contractor's control, where the facilities are segregated. The term "facilities" includes waiting rooms, work areas, restaurants and other eating areas, time clocks, restrooms, washrooms, locker rooms, and other storage or dressing areas, parking lots, drinking fountains, recreation or entertainment areas, transportation, and housing provided for employees. The contractor shall provide separate or single-user restrooms and necessary dressing or sleeping areas to assure privacy between sexes.

IV. DAVIS-BACON AND RELATED ACT PROVISIONS

This section is applicable to all Federal-aid construction projects exceeding $2,000 and to all related subcontracts and lower-tier subcontracts (regardless of subcontract size). The requirements apply to all projects located within the right-of-way of a roadway that is functionally classified as Federal-aid highway. This excludes roadways functionally classified as local roads or rural minor collectors, which are exempt. Contracting agencies may elect to apply these requirements to other projects.

The following provisions are from the U.S. Department of Labor regulations in 29 CFR 5.5 "Contract provisions and related matters" with minor revisions to conform to the FHWA-1273 format and FHWA program requirements.

1. Minimum wages

a. All laborers and mechanics employed or working upon the site of the work, will be paid unconditionally and not less often than once a week, and without subsequent deduction or rebate on any account (except such payroll deductions as are permitted by regulations issued by the Secretary of Labor under the Copeland Act (29 CFR part 3)), the full amount of wages and bona fide fringe benefits (or cash equivalents thereof) due at time of payment computed at rates not less than those contained in the wage determination of the Secretary of Labor which is attached hereto and made a part hereof, regardless of any contractual relationship which may be alleged to exist between the contractor and such laborers and mechanics.

Contributions made or costs reasonably anticipated for bona fide fringe benefits under section 1(b)(2) of the Davis-Bacon Act on behalf of laborers or mechanics are considered wages paid to such laborers or mechanics, subject to the provisions of paragraph 1.d. of this section; also, regular contributions made or costs incurred for more than a weekly period (but not less often than quarterly) under plans, funds, or programs which cover the particular weekly period, are deemed to be constructively made or incurred during such weekly period. Such laborers and mechanics shall be paid the appropriate wage rate and fringe benefits on the wage determination for the classification of work actually performed, without regard to skill, except as provided in 29 CFR 5.5(a)(4). Laborers or mechanics performing work in more than one classification may be compensated at the rate specified for each classification for the time actually worked therein: Provided, That the employer's payroll records accurately set forth the time spent in each classification in which work is performed. The wage determination (including any additional classification and wage rates conformed under paragraph 1.b. of this section) and the Davis-Bacon poster (WH–1321) shall be posted at all times by the contractor and its subcontractors at the site of the work in a prominent and accessible place where it can be easily seen by the workers.

b.(1) The contracting officer shall require that any class of laborers or mechanics, including helpers, which is not listed in the wage determination and which is to be employed under the contract shall be classified in conformance with the wage determination. The contracting officer shall approve an additional classification and wage rate and fringe benefits therefore only when the following criteria have been met:

(i) The work to be performed by the classification requested is not performed by a classification in the wage determination; and

(ii) The classification is utilized in the area by the construction industry; and

(iii) The proposed wage rate, including any bona fide fringe benefits, bears a reasonable relationship to the wage rates contained in the wage determination.

(2) If the contractor and the laborers and mechanics to be employed in the classification (if known), or their representatives, and the contracting officer agree on the classification and wage rate (including the amount designated for fringe benefits where appropriate), a report of the action taken shall be sent by the contracting officer to the Administrator of the Wage and Hour Division, Employment Standards Administration, U.S. Department of Labor, Washington, DC 20210. The Administrator, or an authorized representative, will approve, modify, or disapprove every additional classification action within 30 days of receipt and so advise the contracting officer or will notify the contracting officer within the 30-day period that additional time is necessary.

(3) In the event the contractor, the laborers or mechanics to be employed in the classification or their representatives, and the contracting officer do not agree on the proposed classification and wage rate (including the amount designated for fringe benefits, where appropriate), the contracting officer shall refer the questions, including the views of all interested parties and the recommendation of the contracting officer, to the Wage and Hour Administrator for determination. The Wage and Hour Administrator, or an authorized representative, will issue a determination within 30 days of receipt and so advise the contracting officer or

will notify the contracting officer within the 30-day period that additional time is necessary.

(4) The wage rate (including fringe benefits where appropriate) determined pursuant to paragraphs 1.b.(2) or 1.b.(3) of this section, shall be paid to all workers performing work in the classification under this contract from the first day on which work is performed in the classification.

c. Whenever the minimum wage rate prescribed in the contract for a class of laborers or mechanics includes a fringe benefit which is not expressed as an hourly rate, the contractor shall either pay the benefit as stated in the wage determination or shall pay another bona fide fringe benefit or an hourly cash equivalent thereof.

d. If the contractor does not make payments to a trustee or other third person, the contractor may consider as part of the wages of any laborer or mechanic the amount of any costs reasonably anticipated in providing bona fide fringe benefits under a plan or program, Provided, That the Secretary of Labor has found, upon the written request of the contractor, that the applicable standards of the Davis-Bacon Act have been met. The Secretary of Labor may require the contractor to set aside in a separate account assets for the meeting of obligations under the plan or program.

2. Withholding

The contracting agency shall upon its own action or upon written request of an authorized representative of the Department of Labor, withhold or cause to be withheld from the contractor under this contract, or any other Federal contract with the same prime contractor, or any other federally-assisted contract subject to Davis-Bacon prevailing wage requirements, which is held by the same prime contractor, so much of the accrued payments or advances as may be considered necessary to pay laborers and mechanics, including apprentices, trainees, and helpers, employed by the contractor or any subcontractor the full amount of wages required by the contract. In the event of failure to pay any laborer or mechanic, including any apprentice, trainee, or helper, employed or working on the site of the work, all or part of the wages required by the contract, the contracting agency may, after written notice to the contractor, take such action as may be necessary to cause the suspension of any further payment, advance, or guarantee of funds until such violations have ceased.

3. Payrolls and basic records

a. Payrolls and basic records relating thereto shall be maintained by the contractor during the course of the work and preserved for a period of three years thereafter for all laborers and mechanics working at the site of the work. Such records shall contain the name, address, and social security number of each such worker, his or her correct classification, hourly rates of wages paid (including rates of contributions or costs anticipated for bona fide fringe benefits or cash equivalents thereof of the types described in section 1(b)(2)(B) of the Davis-Bacon Act), daily and weekly number of hours worked, deductions made and actual wages paid. Whenever the Secretary of Labor has found under 29 CFR 5.5(a)(1)(iv) that the wages of any laborer or mechanic include the amount of any costs reasonably anticipated in providing benefits under a plan or program described in section 1(b)(2)(B) of the Davis-Bacon Act, the contractor shall maintain records which show that the commitment to provide such benefits is enforceable, that the plan or program is financially responsible, and that the plan or program has been communicated in writing to the laborers or mechanics affected, and records which show the costs anticipated or the actual cost incurred in providing such benefits. Contractors employing apprentices or trainees under approved programs shall maintain written evidence of the registration of apprenticeship programs and certification of trainee programs, the registration of the apprentices and trainees, and the ratios and wage rates prescribed in the applicable programs.

b.(1) The contractor shall submit weekly for each week in which any contract work is performed a copy of all payrolls to the contracting agency. The payrolls submitted shall set out accurately and completely all of the information required to be maintained under 29 CFR 5.5(a)(3)(i), except that full social security numbers and home addresses shall not be included on weekly transmittals. Instead the payrolls shall only need to include an individually identifying number for each employee (e.g. , the last four digits of the employee's social security number). The required weekly payroll information may be submitted in any form desired. Optional Form WH–347 is available for this purpose from the Wage and Hour Division Web site at http://www.dol.gov/esa/whd/forms/wh347instr.htm or its successor site. The prime contractor is responsible for the submission of copies of payrolls by all subcontractors. Contractors and subcontractors shall maintain the full social security number and current address of each covered worker, and shall provide them upon request to the contracting agency for transmission to the State DOT, the FHWA or the Wage and Hour Division of the Department of Labor for purposes of an investigation or audit of compliance with prevailing wage requirements. It is not a violation of this section for a prime contractor to require a subcontractor to provide addresses and social security numbers to the prime contractor for its own records, without weekly submission to the contracting agency..

(2) Each payroll submitted shall be accompanied by a "Statement of Compliance," signed by the contractor or subcontractor or his or her agent who pays or supervises the payment of the persons employed under the contract and shall certify the following:

(i) That the payroll for the payroll period contains the information required to be provided under §5.5 (a)(3)(ii) of Regulations, 29 CFR part 5, the appropriate information is being maintained under §5.5 (a)(3)(i) of Regulations, 29 CFR part 5, and that such information is correct and complete;

(ii) That each laborer or mechanic (including each helper, apprentice, and trainee) employed on the contract during the payroll period has been paid the full weekly wages earned, without rebate, either directly or indirectly, and that no deductions have been made either directly or indirectly from the full wages earned, other than permissible deductions as set forth in Regulations, 29 CFR part 3;

(iii) That each laborer or mechanic has been paid not less than the applicable wage rates and fringe benefits or cash equivalents for the classification of work performed, as specified in the applicable wage determination incorporated into the contract.

(3) The weekly submission of a properly executed certification set forth on the reverse side of Optional Form WH–347 shall satisfy the requirement for submission of the "Statement of Compliance" required by paragraph 3.b.(2) of this section.

(4) The falsification of any of the above certifications may subject the contractor or subcontractor to civil or criminal prosecution under section 1001 of title 18 and section 231 of title 31 of the United States Code.

c. The contractor or subcontractor shall make the records required under paragraph 3.a. of this section available for inspection, copying, or transcription by authorized representatives of the contracting agency, the State DOT, the FHWA, or the Department of Labor, and shall permit such representatives to interview employees during working hours on the job. If the contractor or subcontractor fails to submit the required records or to make them available, the FHWA may, after written notice to the contractor, the contracting agency or the State DOT, take such action as may be necessary to cause the suspension of any further payment, advance, or guarantee of funds. Furthermore, failure to submit the required records upon request or to make such records available may be grounds for debarment action pursuant to 29 CFR 5.12.

4. Apprentices and trainees

a. Apprentices (programs of the USDOL).

Apprentices will be permitted to work at less than the predetermined rate for the work they performed when they are employed pursuant to and individually registered in a bona fide apprenticeship program registered with the U.S. Department of Labor, Employment and Training Administration, Office of Apprenticeship Training, Employer and Labor Services, or with a State Apprenticeship Agency recognized by the Office, or if a person is employed in his or her first 90 days of probationary employment as an apprentice in such an apprenticeship program, who is not individually registered in the program, but who has been certified by the Office of Apprenticeship Training, Employer and Labor Services or a State Apprenticeship Agency (where appropriate) to be eligible for probationary employment as an apprentice.

The allowable ratio of apprentices to journeymen on the job site in any craft classification shall not be greater than the ratio permitted to the contractor as to the entire work force under the registered program. Any worker listed on a payroll at an apprentice wage rate, who is not registered or otherwise employed as stated above, shall be paid not less than the applicable wage rate on the wage determination for the classification of work actually performed. In addition, any apprentice performing work on the job site in excess of the ratio permitted under the registered program shall be paid not less than the applicable wage rate on the wage determination for the work actually performed. Where a contractor is performing construction on a project in a locality other than that in which its program is registered, the ratios and wage rates (expressed in percentages of the journeyman's hourly rate) specified in the contractor's or subcontractor's registered program shall be observed.

Every apprentice must be paid at not less than the rate specified in the registered program for the apprentice's level of progress, expressed as a percentage of the journeymen hourly rate specified in the applicable wage determination. Apprentices shall be paid fringe benefits in accordance with the provisions of the apprenticeship program. If the apprenticeship program does not specify fringe benefits, apprentices must be paid the full amount of fringe benefits listed on the wage determination for the applicable classification. If the Administrator determines that a different practice prevails for the applicable apprentice classification, fringes shall be paid in accordance with that determination.

In the event the Office of Apprenticeship Training, Employer and Labor Services, or a State Apprenticeship Agency recognized by the Office, withdraws approval of an apprenticeship program, the contractor will no longer be permitted to utilize apprentices at less than the applicable predetermined rate for the work performed until an acceptable program is approved.

b. Trainees (programs of the USDOL).

Except as provided in 29 CFR 5.16, trainees will not be permitted to work at less than the predetermined rate for the work performed unless they are employed pursuant to and individually registered in a program which has received prior approval, evidenced by formal certification by the U.S. Department of Labor, Employment and Training Administration.

The ratio of trainees to journeymen on the job site shall not be greater than permitted under the plan approved by the Employment and Training Administration.

Every trainee must be paid at not less than the rate specified in the approved program for the trainee's level of progress, expressed as a percentage of the journeyman hourly rate specified in the applicable wage determination. Trainees shall be paid fringe benefits in accordance with the provisions of the trainee program. If the trainee program does not mention fringe benefits, trainees shall be paid the full amount of fringe benefits listed on the wage determination unless the Administrator of the Wage and Hour Division determines that there is an apprenticeship program associated with the corresponding journeyman wage rate on the wage determination which provides for less than full fringe benefits for apprentices. Any employee listed on the payroll at a trainee rate who is not registered and participating in a training plan approved by the Employment and Training Administration shall be paid not less than the applicable wage rate on the wage determination for the classification of work actually performed. In addition, any trainee performing work on the job site in excess of the ratio permitted under the registered program shall be paid not less than the applicable wage rate on the wage determination for the work actually performed.

In the event the Employment and Training Administration withdraws approval of a training program, the contractor will no longer be permitted to utilize trainees at less than the applicable predetermined rate for the work performed until an acceptable program is approved.

c. Equal employment opportunity. The utilization of apprentices, trainees and journeymen under this part shall be in conformity with the equal employment opportunity requirements of Executive Order 11246, as amended, and 29 CFR part 30.

d. Apprentices and Trainees (programs of the U.S. DOT).

Apprentices and trainees working under apprenticeship and skill training programs which have been certified by the Secretary of Transportation as promoting EEO in connection with Federal-aid highway construction programs are not subject to the requirements of paragraph 4 of this Section IV. The straight time hourly wage rates for apprentices and trainees under such programs will be established by the particular programs. The ratio of apprentices and trainees to journeymen shall not be greater than permitted by the terms of the particular program.

5. Compliance with Copeland Act requirements. The contractor shall comply with the requirements of 29 CFR part 3, which are incorporated by reference in this contract.

6. Subcontracts. The contractor or subcontractor shall insert Form FHWA-1273 in any subcontracts and also require the subcontractors to include Form FHWA-1273 in any lower tier subcontracts. The prime contractor shall be responsible for the compliance by any subcontractor or lower tier subcontractor with all the contract clauses in 29 CFR 5.5.

7. Contract termination: debarment. A breach of the contract clauses in 29 CFR 5.5 may be grounds for termination of the contract, and for debarment as a contractor and a subcontractor as provided in 29 CFR 5.12.

8. Compliance with Davis-Bacon and Related Act requirements. All rulings and interpretations of the Davis-Bacon and Related Acts contained in 29 CFR parts 1, 3, and 5 are herein incorporated by reference in this contract.

9. Disputes concerning labor standards. Disputes arising out of the labor standards provisions of this contract shall not be subject to the general disputes clause of this contract. Such disputes shall be resolved in accordance with the procedures of the Department of Labor set forth in 29 CFR parts 5, 6, and 7. Disputes within the meaning of this clause include disputes between the contractor (or any of its subcontractors) and the contracting agency, the U.S. Department of Labor, or the employees or their representatives.

10. Certification of eligibility.

a. By entering into this contract, the contractor certifies that neither it (nor he or she) nor any person or firm who has an interest in the contractor's firm is a person or firm ineligible to be awarded Government contracts by virtue of section 3(a) of the Davis-Bacon Act or 29 CFR 5.12(a)(1).

b. No part of this contract shall be subcontracted to any person or firm ineligible for award of a Government contract by virtue of section 3(a) of the Davis-Bacon Act or 29 CFR 5.12(a)(1).

c. The penalty for making false statements is prescribed in the U.S. Criminal Code, 18 U.S.C. 1001.

V. CONTRACT WORK HOURS AND SAFETY STANDARDS ACT

The following clauses apply to any Federal-aid construction contract in an amount in excess of $100,000 and subject to the overtime provisions of the Contract Work Hours and Safety Standards Act. These clauses shall be inserted in addition to the clauses required by 29 CFR 5.5(a) or 29 CFR 4.6. As used in this paragraph, the terms laborers and mechanics include watchmen and guards.

1. Overtime requirements. No contractor or subcontractor contracting for any part of the contract work which may require or involve the employment of laborers or mechanics shall require or permit any such laborer or mechanic in any workweek in which he or she is employed on such work to work in excess of forty hours in such workweek unless such laborer or mechanic receives compensation at a rate not less than one and one-half times the basic rate of pay for all hours worked in excess of forty hours in such workweek.

2. Violation; liability for unpaid wages; liquidated damages. In the event of any violation of the clause set forth in paragraph (1.) of this section, the contractor and any subcontractor responsible therefor shall be liable for the unpaid wages. In addition, such contractor and subcontractor shall be liable to the United States (in the case of work done under contract for the District of Columbia or a territory, to such District or to such territory), for liquidated damages. Such liquidated damages shall be computed with respect to each individual laborer or mechanic, including watchmen and guards, employed in violation of the clause set forth in paragraph (1.) of this section, in the sum of $10 for each calendar day on which such individual was required or permitted to work in excess of the standard workweek of forty hours without payment of the overtime wages required by the clause set forth in paragraph (1.) of this section.

3. Withholding for unpaid wages and liquidated damages. The FHWA or the contacting agency shall upon its own action or upon written request of an authorized representative of the Department of Labor withhold or cause to be withheld, from any moneys payable on account of work performed by the contractor or subcontractor under any such contract or any other Federal contract with the same prime contractor, or any other federally-assisted contract subject to the Contract Work Hours and Safety Standards Act, which is held by the same prime contractor, such sums as may be determined to be necessary to satisfy any liabilities of such contractor or subcontractor for unpaid wages and liquidated damages as provided in the clause set forth in paragraph (2.) of this section.

4. Subcontracts. The contractor or subcontractor shall insert in any subcontracts the clauses set forth in paragraph (1.) through (4.) of this section and also a clause requiring the subcontractors to include these clauses in any lower tier subcontracts. The prime contractor shall be responsible for compliance by any subcontractor or lower tier subcontractor with the clauses set forth in paragraphs (1.) through (4.) of this section.

VI. SUBLETTING OR ASSIGNING THE CONTRACT

This provision is applicable to all Federal-aid construction contracts on the National Highway System.

1. The contractor shall perform with its own organization contract work amounting to not less than 30 percent (or a greater percentage if specified elsewhere in the contract) of the total original contract price, excluding any specialty items designated by the contracting agency. Specialty items may be performed by subcontract and the amount of any such specialty items performed may be deducted from the total original contract price before computing the amount of work required to be performed by the contractor's own organization (23 CFR 635.116).

a. The term "perform work with its own organization" refers to workers employed or leased by the prime contractor, and equipment owned or rented by the prime contractor, with or without operators. Such term does not include employees or equipment of a subcontractor or lower tier subcontractor, agents of the prime contractor, or any other assignees. The term may include payments for the costs of hiring leased employees from an employee leasing firm meeting all relevant Federal and State regulatory requirements. Leased employees may only be included in this term if the prime contractor meets all of the following conditions:

(1) the prime contractor maintains control over the supervision of the day-to-day activities of the leased employees;
(2) the prime contractor remains responsible for the quality of the work of the leased employees;
(3) the prime contractor retains all power to accept or exclude individual employees from work on the project; and
(4) the prime contractor remains ultimately responsible for the payment of predetermined minimum wages, the submission of payrolls, statements of compliance and all other Federal regulatory requirements.

b. "Specialty Items" shall be construed to be limited to work that requires highly specialized knowledge, abilities, or equipment not ordinarily available in the type of contracting organizations qualified and expected to bid or propose on the contract as a whole and in general are to be limited to minor components of the overall contract.

2. The contract amount upon which the requirements set forth in paragraph (1) of Section VI is computed includes the cost of material and manufactured products which are to be purchased or produced by the contractor under the contract provisions.

3. The contractor shall furnish (a) a competent superintendent or supervisor who is employed by the firm, has full authority to direct performance of the work in accordance with the contract requirements, and is in charge of all construction operations (regardless of who performs the work) and (b) such other of its own organizational resources (supervision, management, and engineering services) as the contracting officer determines is necessary to assure the performance of the contract.

4. No portion of the contract shall be sublet, assigned or otherwise disposed of except with the written consent of the contracting officer, or authorized representative, and such consent when given shall not be construed to relieve the contractor of any responsibility for the fulfillment of the contract. Written consent will be given only after the contracting agency has assured that each subcontract is evidenced in writing and that it contains all pertinent provisions and requirements of the prime contract.

5. The 30% self-performance requirement of paragraph (1) is not applicable to design-build contracts; however, contracting agencies may establish their own self-performance requirements.

VII. SAFETY: ACCIDENT PREVENTION

This provision is applicable to all Federal-aid construction contracts and to all related subcontracts.

1. In the performance of this contract the contractor shall comply with all applicable Federal, State, and local laws governing safety, health, and sanitation (23 CFR 635). The contractor shall provide all safeguards, safety devices and protective equipment and take any other needed actions as it determines, or as the contracting officer may determine, to be reasonably necessary to protect the life and health of employees on the job and the safety of the public and to protect property in connection with the performance of the work covered by the contract.

2. It is a condition of this contract, and shall be made a condition of each subcontract, which the contractor enters into pursuant to this contract, that the contractor and any subcontractor shall not permit any employee, in performance of the contract, to work in surroundings or under conditions which are unsanitary, hazardous or dangerous to his/her health or safety, as determined under construction safety and health standards (29 CFR 1926) promulgated by the Secretary of Labor, in accordance with Section 107 of the Contract Work Hours and Safety Standards Act (40 U.S.C. 3704).

3. Pursuant to 29 CFR 1926.3, it is a condition of this contract that the Secretary of Labor or authorized representative thereof, shall have right of entry to any site of contract performance to inspect or investigate the matter of compliance with the construction safety and health standards and to carry out the duties of the Secretary under Section 107 of the Contract Work Hours and Safety Standards Act (40 U.S.C.3704).

VIII. FALSE STATEMENTS CONCERNING HIGHWAY PROJECTS

This provision is applicable to all Federal-aid construction contracts and to all related subcontracts.

In order to assure high quality and durable construction in conformity with approved plans and specifications and a high degree of reliability on statements and representations made by engineers, contractors, suppliers, and workers on Federal-aid highway projects, it is essential that all persons concerned with the project perform their functions as carefully, thoroughly, and honestly as possible. Willful falsification, distortion, or misrepresentation with respect to any facts related to the project is a violation of Federal law. To prevent any misunderstanding regarding the seriousness of these and similar acts, Form FHWA-1022 shall be posted on each Federal-aid highway project (23 CFR 635) in one or more places where it is readily available to all persons concerned with the project:

18 U.S.C. 1020 reads as follows:

"Whoever, being an officer, agent, or employee of the United States, or of any State or Territory, or whoever, whether a person, association, firm, or corporation, knowingly makes any false statement, false representation, or false report as to the character, quality, quantity, or cost of the material used or to be used, or the quantity or quality of the work performed or to be performed, or the cost thereof in connection with the submission of plans, maps, specifications, contracts, or costs of construction on any highway or related project submitted for approval to the Secretary of Transportation; or

Whoever knowingly makes any false statement, false representation, false report or false claim with respect to the character, quality, quantity, or cost of any work performed or to be performed, or materials furnished or to be furnished, in connection with the construction of any highway or related project approved by the Secretary of Transportation; or

Whoever knowingly makes any false statement or false representation as to material fact in any statement, certificate, or report submitted pursuant to provisions of the Federal-aid Roads Act approved July 1, 1916, (39 Stat. 355), as amended and supplemented;

Shall be fined under this title or imprisoned not more than 5 years or both."

IX. IMPLEMENTATION OF CLEAN AIR ACT AND FEDERAL WATER POLLUTION CONTROL ACT

This provision is applicable to all Federal-aid construction contracts and to all related subcontracts.

By submission of this bid/proposal or the execution of this contract, or subcontract, as appropriate, the bidder, proposer, Federal-aid construction contractor, or subcontractor, as appropriate, will be deemed to have stipulated as follows:

1. That any person who is or will be utilized in the performance of this contract is not prohibited from receiving an award due to a violation of Section 508 of the Clean Water Act or Section 306 of the Clean Air Act.
2. That the contractor agrees to include or cause to be included the requirements of paragraph (1) of this Section X in every subcontract, and further agrees to take such action as the contracting agency may direct as a means of enforcing such requirements.

X. CERTIFICATION REGARDING DEBARMENT, SUSPENSION, INELIGIBILITY AND VOLUNTARY EXCLUSION

This provision is applicable to all Federal-aid construction contracts, design-build contracts, subcontracts, lower-tier subcontracts, purchase orders, lease agreements, consultant contracts or any other covered transaction requiring FHWA approval or that is estimated to cost $25,000 or more – as defined in 2 CFR Parts 180 and 1200.

1. **Instructions for Certification – First Tier Participants:**

a. By signing and submitting this proposal, the prospective first tier participant is providing the certification set out below.

b. The inability of a person to provide the certification set out below will not necessarily result in denial of participation in this covered transaction. The prospective first tier participant shall submit an explanation of why it cannot provide the certification set out below. The certification or explanation will be considered in connection with the department or agency's determination whether to enter into this transaction. However, failure of the prospective first tier participant to furnish a certification or an explanation shall disqualify such a person from participation in this transaction.

c. The certification in this clause is a material representation of fact upon which reliance was placed when the contracting agency determined to enter into this transaction. If it is later determined that the prospective participant knowingly rendered an erroneous certification, in addition to other remedies available to the Federal Government, the contracting agency may terminate this transaction for cause of default.

d. The prospective first tier participant shall provide immediate written notice to the contracting agency to whom this proposal is submitted if any time the prospective first tier participant learns that its certification was erroneous when submitted or has become erroneous by reason of changed circumstances.

e. The terms "covered transaction," "debarred," "suspended," "ineligible," "participant," "person," "principal," and "voluntarily excluded," as used in this clause, are defined in 2 CFR Parts 180 and 1200. "First Tier Covered Transactions" refers to any covered transaction between a grantee or subgrantee of Federal funds and a participant (such as the prime or general contract). "Lower Tier Covered Transactions" refers to any covered transaction under a First Tier Covered Transaction (such as subcontracts). "First Tier Participant" refers to the participant who has entered into a covered transaction with a grantee or subgrantee of Federal funds (such as the prime or general contractor). "Lower Tier Participant" refers any participant who has entered into a covered transaction with a First Tier Participant or other Lower Tier Participants (such as subcontractors and suppliers).

f. The prospective first tier participant agrees by submitting this proposal that, should the proposed covered transaction be entered into, it shall not knowingly enter into any lower tier covered transaction with a person who is debarred, suspended, declared ineligible, or voluntarily excluded from participation in this covered transaction, unless authorized by the department or agency entering into this transaction.

g. The prospective first tier participant further agrees by submitting this proposal that it will include the clause titled "Certification Regarding Debarment, Suspension, Ineligibility and Voluntary Exclusion-Lower Tier Covered Transactions," provided by the department or contracting agency, entering into this covered transaction, without modification, in all lower tier covered transactions and in all solicitations for lower tier covered transactions exceeding the $25,000 threshold.

h. A participant in a covered transaction may rely upon a certification of a prospective participant in a lower tier covered transaction that is not debarred, suspended, ineligible, or voluntarily excluded from the covered transaction, unless it knows that the certification is erroneous. A participant is responsible for ensuring that its principals are not suspended, debarred, or otherwise ineligible to participate in covered transactions. To verify the eligibility of its principals, as well as the eligibility of any lower tier prospective participants, each participant may, but is not required to, check the Excluded Parties List System website (https://www.epls.gov/), which is compiled by the General Services Administration.

i. Nothing contained in the foregoing shall be construed to require the establishment of a system of records in order to render in good faith the certification required by this clause. The knowledge and information of the prospective participant is not required to exceed that which is normally possessed by a prudent person in the ordinary course of business dealings.

j. Except for transactions authorized under paragraph (f) of these instructions, if a participant in a covered transaction knowingly enters into a lower tier covered transaction with a person who is suspended, debarred, ineligible, or voluntarily excluded from participation in this transaction, in addition to other remedies available to the Federal Government, the department or agency may terminate this transaction for cause or default.

* * * * *

2. Certification Regarding Debarment, Suspension, Ineligibility and Voluntary Exclusion – First Tier Participants:

a. The prospective first tier participant certifies to the best of its knowledge and belief, that it and its principals:

(1) Are not presently debarred, suspended, proposed for debarment, declared ineligible, or voluntarily excluded from participating in covered transactions by any Federal department or agency;

(2) Have not within a three-year period preceding this proposal been convicted of or had a civil judgment rendered against them for commission of fraud or a criminal offense in connection with obtaining, attempting to obtain, or performing a public (Federal, State or local) transaction or contract under a public transaction; violation of Federal or State antitrust statutes or commission of embezzlement, theft, forgery, bribery, falsification or destruction of records, making false statements, or receiving stolen property;

(3) Are not presently indicted for or otherwise criminally or civilly charged by a governmental entity (Federal, State or local) with commission of any of the offenses enumerated in paragraph (a)(2) of this certification; and

(4) Have not within a three-year period preceding this application/proposal had one or more public transactions (Federal, State or local) terminated for cause or default.

b. Where the prospective participant is unable to certify to any of the statements in this certification, such prospective participant shall attach an explanation to this proposal.

2. **Instructions for Certification - Lower Tier Participants:**

(Applicable to all subcontracts, purchase orders and other lower tier transactions requiring prior FHWA approval or estimated to cost $25,000 or more - 2 CFR Parts 180 and 1200)

a. By signing and submitting this proposal, the prospective lower tier is providing the certification set out below.

b. The certification in this clause is a material representation of fact upon which reliance was placed when this transaction was entered into. If it is later determined that the prospective lower tier participant knowingly rendered an erroneous certification, in addition to other remedies available to the Federal Government, the department, or agency with which this transaction originated may pursue available remedies, including suspension and/or debarment.

c. The prospective lower tier participant shall provide immediate written notice to the person to which this proposal is submitted if at any time the prospective lower tier participant learns that its certification was erroneous by reason of changed circumstances.

d. The terms "covered transaction," "debarred," "suspended," "ineligible," "participant," "person," "principal," and "voluntarily excluded," as used in this clause, are defined in 2 CFR Parts 180 and 1200. You may contact the person to which this proposal is submitted for assistance in obtaining a copy of those regulations. "First Tier Covered Transactions" refers to any covered transaction between a grantee or subgrantee of Federal funds and a participant (such as the prime or general contract). "Lower Tier Covered Transactions" refers to any covered transaction under a First Tier Covered Transaction (such as subcontracts). "First Tier Participant" refers to the participant who has entered into a covered transaction with a grantee or subgrantee of Federal funds (such as the prime or general contractor). "Lower Tier Participant" refers any participant who has entered into a covered transaction with a First Tier Participant or other Lower Tier Participants (such as subcontractors and suppliers).

e. The prospective lower tier participant agrees by submitting this proposal that, should the proposed covered transaction be entered into, it shall not knowingly enter into any lower tier covered transaction with a person who is debarred, suspended, declared ineligible, or voluntarily excluded from participation in this covered transaction, unless authorized by the department or agency with which this transaction originated.

f. The prospective lower tier participant further agrees by submitting this proposal that it will include this clause titled "Certification Regarding Debarment, Suspension, Ineligibility and Voluntary Exclusion-Lower Tier Covered Transaction," without modification, in all lower tier covered transactions and in all solicitations for lower tier covered transactions exceeding the $25,000 threshold.

g. A participant in a covered transaction may rely upon a certification of a prospective participant in a lower tier covered transaction that is not debarred, suspended, ineligible, or voluntarily excluded from the covered transaction, unless it knows that the certification is erroneous. A participant is responsible for ensuring that its principals are not suspended, debarred, or otherwise ineligible to participate in covered transactions. To verify the eligibility of its principals, as well as the eligibility of any lower tier prospective participants, each participant may, but is not required to, check the Excluded Parties List System website (https://www.epls.gov/), which is compiled by the General Services Administration.

h. Nothing contained in the foregoing shall be construed to require establishment of a system of records in order to render in good faith the certification required by this clause. The knowledge and information of participant is not required to exceed that which is normally possessed by a prudent person in the ordinary course of business dealings.

i. Except for transactions authorized under paragraph e of these instructions, if a participant in a covered transaction knowingly enters into a lower tier covered transaction with a person who is suspended, debarred, ineligible, or voluntarily excluded from participation in this transaction, in addition to other remedies available to the Federal Government, the

department or agency with which this transaction originated may pursue available remedies, including suspension and/or debarment.

* * * * *

Certification Regarding Debarment, Suspension, Ineligibility and Voluntary Exclusion--Lower Tier Participants:

1. The prospective lower tier participant certifies, by submission of this proposal, that neither it nor its principals is presently debarred, suspended, proposed for debarment, declared ineligible, or voluntarily excluded from participating in covered transactions by any Federal department or agency.

2. Where the prospective lower tier participant is unable to certify to any of the statements in this certification, such prospective participant shall attach an explanation to this proposal.

* * * * *

XI. CERTIFICATION REGARDING USE OF CONTRACT FUNDS FOR LOBBYING

This provision is applicable to all Federal-aid construction contracts and to all related subcontracts which exceed $100,000 (49 CFR 20).

1. The prospective participant certifies, by signing and submitting this bid or proposal, to the best of his or her knowledge and belief, that:

a. No Federal appropriated funds have been paid or will be paid, by or on behalf of the undersigned, to any person for influencing or attempting to influence an officer or employee of any Federal agency, a Member of Congress, an officer or employee of Congress, or an employee of a Member of Congress in connection with the awarding of any Federal contract, the making of any Federal grant, the making of any Federal loan, the entering into of any cooperative agreement, and the extension, continuation, renewal, amendment, or modification of any Federal contract, grant, loan, or cooperative agreement.

b. If any funds other than Federal appropriated funds have been paid or will be paid to any person for influencing or attempting to influence an officer or employee of any Federal agency, a Member of Congress, an officer or employee of Congress, or an employee of a Member of Congress in connection with this Federal contract, grant, loan, or cooperative agreement, the undersigned shall complete and submit Standard Form-LLL, "Disclosure Form to Report Lobbying," in accordance with its instructions.

2. This certification is a material representation of fact upon which reliance was placed when this transaction was made or entered into. Submission of this certification is a prerequisite for making or entering into this transaction imposed by 31 U.S.C. 1352. Any person who fails to file the required certification shall be subject to a civil penalty of not less than $10,000 and not more than $100,000 for each such failure.

3. The prospective participant also agrees by submitting its bid or proposal that the participant shall require that the language of this certification be included in all lower tier subcontracts, which exceed $100,000 and that all such recipients shall certify and disclose accordingly.

ATTACHMENT A - EMPLOYMENT AND MATERIALS PREFERENCE FOR APPALACHIAN DEVELOPMENT HIGHWAY SYSTEM OR APPALACHIAN LOCAL ACCESS ROAD CONTRACTS

This provision is applicable to all Federal-aid projects funded under the Appalachian Regional Development Act of 1965.

1. During the performance of this contract, the contractor undertaking to do work which is, or reasonably may be, done as on-site work, shall give preference to qualified persons who regularly reside in the labor area as designated by the DOL wherein the contract work is situated, or the subregion, or the Appalachian counties of the State wherein the contract work is situated, except:

a. To the extent that qualified persons regularly residing in the area are not available.

b. For the reasonable needs of the contractor to employ supervisory or specially experienced personnel necessary to assure an efficient execution of the contract work.

c. For the obligation of the contractor to offer employment to present or former employees as the result of a lawful collective bargaining contract, provided that the number of nonresident persons employed under this subparagraph (1c) shall not exceed 20 percent of the total number of employees employed by the contractor on the contract work, except as provided in subparagraph (4) below.

2. The contractor shall place a job order with the State Employment Service indicating (a) the classifications of the laborers, mechanics and other employees required to perform the contract work, (b) the number of employees required in each classification, (c) the date on which the participant estimates such employees will be required, and (d) any other pertinent information required by the State Employment Service to complete the job order form. The job order may be placed with the State Employment Service in writing or by telephone. If during the course of the contract work, the information submitted by the contractor in the original job order is substantially modified, the participant shall promptly notify the State Employment Service.

3. The contractor shall give full consideration to all qualified job applicants referred to him by the State Employment Service. The contractor is not required to grant employment to any job applicants who, in his opinion, are not qualified to perform the classification of work required.

4. If, within one week following the placing of a job order by the contractor with the State Employment Service, the State Employment Service is unable to refer any qualified job applicants to the contractor, or less than the number requested, the State Employment Service will forward a certificate to the contractor indicating the unavailability of applicants. Such certificate shall be made a part of the contractor's permanent project records. Upon receipt of this certificate, the contractor may employ persons who do not normally reside in the labor area to fill positions covered by the certificate, notwithstanding the provisions of subparagraph (1c) above.

5. The provisions of 23 CFR 633.207(e) allow the contracting agency to provide a contractual preference for the use of mineral resource materials native to the Appalachian region.

6. The contractor shall include the provisions of Sections 1 through 4 of this Attachment A in every subcontract for work which is, or reasonably may be, done as on-site work.

ATTACHMENT "G"

BUY AMERICA REQUIREMENTS

Source of Supply – Steel and Iron (Federal Aid Contracts Only): For Federal-aid contracts, the Contractor will only use steel and iron produced in the United States, in accordance with the buy America provisions of 23 CFR 635.410. Contractor will ensure that all manufacturing processes for these materials occur in the United States. A manufacturing process is any process that modifies the chemical content, physical shape, size or final finish of a product, beginning with the initial melding and mixing and continuing through the bending and coating stages. A manufactured steel or iron product is complete only when all grinding, drilling, welding, finishing and coating have been completed. If a domestic product is taken outside the United States for any process, it becomes foreign source material. When using steel and iron as a component of any manufactured product incorporated into the project (*e.g.*, concrete pipe, pre-stressed beams, corrugated steel pipe, etc.), these same provisions apply, except that the manufacturer may use minimal quantities of foreign steel and iron when the cost of such foreign materials does not exceed 0.1% of the compensation or $2,500, whichever is greater. These requirements are applicable to all steel and iron materials incorporated into the finished work, but are not applicable to steel and iron items that the Contractor uses but does not incorporate into the finished work. The Contractor shall provide a certification from the producer of steel or iron, or any product containing steel or iron as a component, stating that all steel or iron furnished or incorporated into the finished product was manufactured in the United States in accordance with the requirements of this provision. Such certification shall also include: (1) a statement that the product was produced entirely within the United States, or (2) a statement that the product was produced with the United States except for minimal quantities of foreign steel and iron and specify the actual value of the product. Each such certification shall be furnished to the AUTHORITY prior to incorporating the material into the project. When FHWA allows the use of foreign steel on a project, Contractor shall furnish invoices to document the costs of such material, and obtain the AUTHORITY'S written approval prior to incorporating the material into the project.

ATTACHMENT "H"

PERFORMANCE AND PAYMENT BOND

BY THIS BOND, WE, _____, Inc., as Principal and _____ a Corporation, as Surety, are bound to the Solid Waste Authority of Palm Beach County, hereinafter referred to as "Authority", in the sum of _____ **Dollars (up to $10,000,000),** for payment of which we bind ourselves, our heirs, personal representatives, successors, and assigns, jointly and severally.

THE CONDITION OF THIS BOND is that if Principal:

1. Performs the Agreement dated _____, 20_____ between Principal and Authority for Proposal of Hurricane/Disaster Debris Removal, Reduction and Disposal, **Agreement No. 22-201,** the Agreement being made a part of this bond by reference, in the time and in the manner prescribed in the Agreement, and;

2. Promptly makes payment to all claimants, as defined in Section 255.05(1), Florida Statutes, supplying Principal with labor, materials and supplies, used directly or indirectly by Principal in the prosecution of the work provided for in the Agreement, and;

3. Pays Authority all loss, damages, expenses, costs, and attorney's fees, including appellate proceedings, that Authority sustains because of a default by Principal under the Agreement, and;

4. Performs the guarantee of all work and materials furnished under the Agreement for the time specified in the Agreement, and;

5. At completion of all work covered by Agreement and Final Payment by Authority to Principal then Principal will replace this Performance and Payment Bond with a Proposal Bond, in the amount of 5% of this Performance and Payment Bond, to be held by the Authority as a guarantee that Principal will provide to the Authority a Performance and Payment Bond in the amount of up to $10,000,000 on the occasion of a subsequent Task Order in accordance with the above referenced Agreement;

then this bond is void; otherwise it remains in full force.

Surety shall be responsible for any and all liquidated damages imposed by the Authority for the referenced Agreement.

Any changes in or under the Agreement Documents and compliance or noncompliance with any formalities connected with the Agreement or the changes does not affect Surety's obligation under this bond. Any increase in the total Agreement amount as authorized by the Authority shall accordingly increase the Surety's obligation by the same dollar amount of said increase. CONTRACTOR shall be responsible for notification to Surety of all such changes.

See subsection (2) of Section 255.05, Florida Statutes as amended for the notice and time limitations for claimants.

Signed and sealed this ____ day of _____, 20____.

PRINCIPAL:_____

By: _____
Signature

WITNESS:

Name: _____

1. _____

Title: _____

2. _____

Address: _____

_____

Telephone: _____

SURETY: _____

By: _____
Signature

WITNESS:

Name: _____

1. _____

Title: _____

2. _____

Address: _____

_____

Telephone: _____

NOTE: Date of Bond must not be prior to date of Agreement. If CONTRACTOR is a Partnership, all partners must execute bond.

IMPORTANT: Surety companies executing bonds **must** appear and remain on the Treasury Department's most current list (Circular 570 as amended) during construction, guarantee and warranty periods, and be authorized to transact business in the State of Florida, and be pre-approved by the Authority.

Village of Palm Springs

Executive Brief

AGENDA DATE: June 9, 2022

DEPARTMENT: Public Works

ITEM #6: Approve Hurricane Debris Removal Agreement (Contract No. 22-201C) - Piggyback - Phillips and Jordan, Inc.

SUMMARY: The Village needs to select a vendor to assist with debris removal services that would provide the Village with the immediate ability, following a disaster/storm event, to safely and efficiently clear storm-related debris from public rights-of-way and ensure/provide normal operations for our community as quickly as possible. Additionally, it is recommended that the Village's selection(s) meet the Office of Management and Budget's Procurement Guidelines to ensure eligible funding reimbursements requests are approved by the Federal Emergency Management Agency (FEMA) following a federally declared disaster event. Thus, reducing the potential that the Village will be responsible for the service of debris collection and disposal service costs.

To ensure that the Village selects a vendor that enables the Village to receive eligible federal funding reimbursement(s) following a federally declared disaster event, the staff is recommending that the Village use the Palm Beach County Solid Waste Authority's (SWA) contract that was awarded to Phillips and Jordan, Inc. The selection by the Solid Waste Authority was completed through a competitive bid process - Request of Proposal for Hurricane/Disaster Debris Removal, Reduction, and Disposal (RFP No.22-201/DL - May 8, 2022).

If approved, the Village would use SWA's contract to obtain debris removal services (i.e public rights of way collection, loading, and hauling to a designated site accepting storm debris). Phillips and Jordan, Inc. entered into a 5-year contract with the Solid Waste Authority and meets the federal procurement standards to ensure FEMA compliance to maximize eligible Hurricane-related expense reimbursement for the Village. The Village would accept the pricing of Phillips and Jordan, Inc. by using the Palm Beach County Solid Waste Authority's contract including all terms, conditions, and pricing therein. The term of the contract is set to expire on May 7, 2025.

The Village's Purchasing Code, Section 58-9, Accessing contracts of other government agencies, provides that the Village may award a contract by piggybacking or accessing the goods and/or services from any State of Florida contract; contracts of any Florida political subdivision; or from any other governmental entity (other than the Federal government); provided that the same or substantially similar goods and/or services were competitively solicited.

In the event of an emergency event, the Village Manager will select the contractor to use from the approved vendors based on the availability of equipment and staff as well as the fee schedule. This authority will be requested as emergency power and the selection(s) will be presented to the Village Council for approval during the next available Council Meeting (following the storm event).

The proposed agreement was prepared by the Village Attorney and reviewed by the Parks and Recreation Director and Public Works Director.

FISCAL IMPACT:

Funding to support a natural disaster/storm event is available within the Village's Reserves and will be requested to be reimbursed by the Federal Emergency Management Agency (FEMA) following a federally declared disaster/storm event.

ATTACHMENTS:

1. Proposed Philips and Jordan, Inc. - Agreement Signed - Piggyback of SWA 2022
2. RFP No. 22-201/DL - Hurricane/Disaster Debris Removal, Reduction and Disposal - Addendum No. 1 - Solid Waste Authority of Palm Beach County
3. Phillips and Jordan, Inc. (2022) - Hurricane Disaster Debris Removal, Reduction and Disposal - Contract
4. RFP No. 22-201/DL - Hurricane/Disaster Debris Removal, Reduction and Disposal - Solid Waste Authority of Palm Beach County

DocuSign Envelope ID: 2BA87741-4E49-4750-92E0-0ADAA6169F09

AGREEMENT FOR DISASTER DEBRIS MANAGEMENT SERVICES

This Agreement for disaster debris management and support services ("Agreement" hereafter) is made as of the _____ day of _____, 2022, by and between the **Village of Palm Springs**, 226 Cypress Lane, Palm Springs, Florida 33461-1699, a municipal corporation organized and existing under the laws of the State of Florida, hereinafter referred to as the VILLAGE, and **Phillips and Jordan, Inc.,** 10142 Parkside Drive, Suite 500, Knoxville, TN 37922, a corporation authorized to do business in the State of Florida, hereinafter referred to as the CONTRACTOR.

RECITALS

WHEREAS, the VILLAGE is in need of a contractor to provide the VILLAGE with disaster debris management and support services; and,

WHEREAS, the Solid Waste Authority of Palm Beach County through its competitive selection process awarded a Contract for disaster debris management and support services (22-201/DL) ("SWA Contract" hereafter) to the CONTRACTOR for substantially the same services sought by the VILLAGE; and,

WHEREAS, the VILLAGE requested and the CONTRACTOR has executed this Agreement with the VILLAGE for disaster debris management and support services based on the pricing and terms and conditions of the SWA Contract; and,

WHEREAS, the VILLAGE desires to accept CONTRACTOR's pricing by incorporating the SWA Contract including all terms, conditions and pricing therein into this Agreement.

NOW THEREFORE, in consideration of the mutual promises set forth herein, the receipt and sufficiency of which are hereby acknowledged, the parties hereto agree as follows:

1. Recitals. The parties agree that the recitals set forth above are true and correct and are fully incorporated herein by reference.

2. SWA Contract. The SWA Contract with the CONTRACTOR is hereby expressly made a part of this Agreement as fully as if set forth at length herein. The VILLAGE shall have all rights, obligations and remedies authorized to the Solid Waste Authority of Palm Beach County under the SWA Contract and all associated and applicable Contract Documents as defined therein.

3. Agreement. In accordance with the terms and conditions in the SWA Contract and pricing therein, the CONTRACTOR shall provide disaster debris management and support services as requested by the VILLAGE.

4. Contract Documents and Conflict of Terms and Conditions. The Contract Documents for this Agreement are compromised of the following:

A. All written modifications and amendments hereto;

DocuSign Envelope ID: 2BA87741-4E49-4750-92E0-0ADAA6169F09

B. This Agreement;
C. SWA Contract (including the RFP, Contractors Proposal and Contract).

The Contract Documents of this Agreement are intended to be complementary and interpreted in harmony so as to avoid conflict with the words and phrases interpreted in a manner consistent with managing debris removal and industry standards. In the event of any inconsistency, conflict or ambiguity between or among the Contract Documents of this Agreement, the Contract Documents of this Agreement shall take precedence in the following order:

A. All written modifications and amendments hereto;
B. This Agreement;
C. The SWA Contract.

5. Compensation to Contractor. Payments by the VILLAGE to the CONTRACTOR under this Agreement shall not exceed the amount of compensation, on the unit basis, as set forth under the SWA Contract. CONTRACTOR waives consequential or incidental damages for claims, disputes or other matters in question arising out of or relating to this Agreement.

6. Miscellaneous Provisions.

6.1 The VILLAGE and CONTRACTOR each binds itself, its partners, its successors, assigns and legal representatives to the other party hereto, its partners, successors, assigns and legal representatives in respect of all covenants, agreements and obligations contained in the Contract Documents.

6.2 CONTRACTOR shall maintain the insurance as required in SWA Contract applicable to the goods and services being delivered hereunder. Said insurance will name the VILLAGE as an additional insured.

6.3 Headings and References & Exhibits: The headings contained in this Agreement are inserted for convenience of reference only and shall not be a part or control or affect the meaning hereof. All references herein to Exhibits are to the exhibits hereto, each of which shall be incorporated into and deemed to be a part of this Agreement.

6.4 Counterparts: This Contract may be executed in two or more counterparts, each of which shall be deemed to be an original, but all of which shall be deemed to be an original, but each of which together shall constitute one and the same instrument.

6.5 Entire Agreement; Amendment and Waiver: This Agreement (together with the Exhibits hereto) supersedes any and all prior negotiations and oral or written agreements heretofore made relating to the subject matter hereof and, except for written agreements, if any, executed and delivered simultaneously with or subsequent to the date of this Agreement, constitutes the entire agreement of the parties relating to the subject matter hereof. This Agreement may not be altered or amended except by a writing signed by the parties hereto. No waiver of any of the terms or conditions of this Agreement shall be effective unless in writing and executed by the party to be changed therewith. No waiver

DocuSign Envelope ID: 2BA87741-4E49-4750-92E0-0ADAA6169F09

of any condition or of the breach of any term, covenant, representation, warranty or other provision hereof shall be deemed to be construed as a further or continuing waiver of any such condition or breach or a waiver of any other condition or of any breach of any other term, covenant, representation, warranty or other provision contained in this Agreement.

6.6 Successors and Assigns: This Agreement shall be binding upon, and shall inure to the benefit of the parties hereto and their respective successors and assigns.

6.7 Governing Law; Consent to Jurisdiction: This Agreement shall be governed by and construed and interpreted in accordance with the laws of the State of Florida. Each of the parties hereto (a) irrevocably submit itself to the exclusive jurisdiction of the Fifteenth Judicial Circuit Court in and for Palm Beach County, Florida for state actions and jurisdiction of the United States District Court for the Southern District of Florida, Palm Beach Division, for the purposes of any suit, action or other proceeding arising out of, or relating to, this Agreement; (b) waives and agrees not to assert against any party hereto, by way of motion, as a defense of otherwise, in any suit, action or other proceeding, any claim that it is not personally subject to the jurisdiction of the above-named courts for any reason whatsoever; and (ii) to the extent permitted by applicable law, any claim that such suit, action or proceeding by any part hereto is brought in an inconvenient forum or that the venue of such suit, action or proceeding is improper or that this Agreement or the subject matter hereof may not be enforced in or by such courts.

6.8 Third Party Beneficiary rights: This Agreement shall create no rights or claims whatsoever in any person other than a party herein.

6.9 Severability: If any one or more of the provisions of the Agreement shall be held to be invalid, illegal or unenforceable in any respect, the validity, legality and enforceability of the remaining provisions hereof shall not in any way be affected or impaired thereby.

6.10 Effective date, term and renewal: The effective date of this Agreement is the date the Agreement is approved by the Village Council. The term of this Agreement shall be for an initial term to mirror the SWA Contract term which shall expire on May 7, 2025, unless terminated sooner. The SWA Contract is subject to a one year renewal, and if renewed the VILLAGE also has the right to renew this Agreement for a one year period.

6.11 Public Records: Public Records: CONTRACTOR shall comply with Florida's Public Records Act, Chapter 119, Florida Statutes, and, if determined to be acting on behalf of the VILLAGE as provided under section 119.011(2), Florida Statutes, specifically agrees to:

(a) Keep and maintain public records required by the VILLAGE to perform the service.

(b) Upon request from the VILLAGE's custodian of public records or designee, provide the VILLAGE with a copy of the requested records or allow the records to be inspected or copied within a reasonable time at a cost that does not exceed the cost provided in Chapter 119, Florida Statutes, or as otherwise provided by law.

DocuSign Envelope ID: 2BA87741-4E49-4750-92E0-0ADAA6169F09

(c) Ensure that public records that are exempt or confidential and exempt from public records disclosure requirements are not disclosed except as authorized by law for the duration of this Agreement and following completion of this Agreement if the CONTRACTOR does not transfer the records to the VILLAGE.

(d) Upon completion of this Agreement, transfer, at no cost, to the VILLAGE all public records in possession of the CONTRACTOR or keep and maintain public records required by the VILLAGE to perform the service. If the CONTRACTOR transfers all public records to the VILLAGE upon completion of the Agreement, the CONTRACTOR shall destroy any duplicate public records that are exempt or confidential and exempt from public records disclosure requirements. If the CONTRACTOR keeps and maintains public records upon completion of the Agreement, the CONTRACTOR shall meet all applicable requirements for retaining public records. All records stored electronically must be provided to the VILLAGE, upon request from the VILLAGE's custodian of public records or designee, in a format that is compatible with the information technology systems of the VILLAGE.

IF THE CONTRACTOR HAS QUESTIONS REGARDING THE APPLICATION OF CHAPTER 119, FLORIDA STATUTES, TO THE CONTRACTOR'S DUTY TO PROVIDE PUBLIC RECORDS RELATING TO THIS AGREEMENT, CONTACT THE CUSTODIAN OF PUBLIC RECORDS OR DESIGNEE AT 561-434-5084, jworth@vpsfl.org, OR BY MAIL AT VILLAGE OF PALM SPRINGS, 226 CYPRESS LANE, PALM SPRINGS, FL 33461.

6.12 Preparation: This Agreement shall not be construed more strongly against either party regardless of who was more responsible for its preparation.

6.13 PALM BEACH COUNTY IG: In accordance with Palm Beach County ordinance number 2011-009, the CONTRACTOR acknowledges that this Agreement may be subject to investigation and/or audit by the Palm Beach County Inspector General. The CONTRACTOR has reviewed Palm Beach County ordinance number 2011-009 and is aware of its rights and/or obligations under such ordinance.

6.14 All notices required in this Agreement shall be sent by certified mail, return receipt requested, and sent to the addresses appearing on the first page of this Agreement.

6.15 The VILLAGE is exempt from payment of Florida State Sales and Use Tax. The CONTRACTOR shall not be exempted from paying sales tax to its suppliers for materials used to fill contractual obligations with the VILLAGE, nor is the CONTRACTOR authorized to use the VILLAGE'S Tax Exemption Number in securing such materials.

7. Indemnification. CONTRACTOR shall indemnify and hold harmless the VILLAGE in the same manner as provided in the SWA Contract as it relates to the indemnification of the Solid Waste Authority of Palm Beach County.

DocuSign Envelope ID: 2BA87741-4E49-4750-92E0-0ADAA6169F09

8. Agreement Administration. Services of the CONTRACTOR shall be under the general direction of the Village Manager, or his/her designee, who will act as the VILLAGE'S representative during the term of the Agreement.

9. E-Verify Pursuant to Section 448.095(2), Florida Statutes, effective January 1, 2021, the CONTRACTOR shall:

9.1 Register with and use the E-Verify system to verify the work authorization status of all newly hired employees and require all subcontractors (providing services or receiving funding under this Agreement) to register with and use the E-Verify system to verify the work authorization status of all the subcontractors' newly hired employees;

9.2 Secure an affidavit from all subcontractors (providing services or receiving funding under this Agreement) stating that the subcontractor does not employ, contract with, or subcontract with an "unauthorized alien" as defined in Section 448.095(1)(k), Florida Statutes;

9.3 Maintain copies of all subcontractor affidavits for the duration of this Agreement and provide the same to the Owner upon request;

9.4 Comply fully, and ensure all of its subcontractors comply fully, with Section 448.095, Florida Statutes;

9.5 Be aware that a violation of Section 448.09, Florida Statutes (Unauthorized aliens; employment prohibited) shall be grounds for termination of this Agreement; and,

9.6 Be aware that if the VILLAGE terminates this Agreement under Section 448.095(2)(c), Florida Statutes, the CONTRACTOR may not be awarded a contract for at least one (1) year after the date on which the Agreement is terminated and will be liable for any additional costs incurred by the VILLAGE as a result of the termination of the Agreement.

DocuSign Envelope ID: 2BA87741-4E49-4750-92E0-0ADAA6169F09

IN WITNESS WHEREOF, the VILLAGE and CONTRACTOR have caused this Agreement to be executed the day and year shown above.

VILLAGE OF PALM SPRINGS, FLORIDA

By: _____
Bev Smith, Mayor

ATTEST

_____
Kimberly Wynn, Village Clerk

Approved as to form and legal sufficiency:

_____
Glen J. Torcivia, Village Attorney

CONTRACTOR: **PHILLIPS AND JORDAN, INC.**

By: Morgan Pierce

Print Name: Morgan Pierce

Title: President - Power

PHILLIPS AND JORDAN INCORPORATED CORPORATE SEAL NORTH CAROLINA

STATE OF TENNESSEE)
COUNTY OF BLOUNT)

The foregoing instrument was acknowledged before me this 23rd day of May, 2022 by Morgan Pierce, as President - Power of Phillips and Jordan, Inc., a corporation authorized to do business in the State of Florida, and who is personally known to me or who has produced the following _____ as identification.

Notary Public

PAUL LENSKI III STATE OF TENNESSEE NOTARY PUBLIC COUNTY OF BLOUNT

_____
Print Name: Paul Lenski
My commission expires: 4/23/24

YOUR PARTNER FOR
SOLID WASTE SOLUTIONS

ADDENDUM NO. 1

HURRICANE/DISASTER DEBRIS REMOVAL, REDUCTION AND DISPOSAL

RFP No. 22-201/DL **February 9, 2022**

This Addendum to the specifications and contract documents is issued to provide additional information and clarification to the original RFP's scope of services and proposal form and is hereby declared a part of the original scope of services and contract documents. In case of a conflict, this Addendum shall govern.

PROPOSERS shall acknowledge receipt of this Addendum by inserting this Addendum Number and Date issued within Proposal Form 1 – Transmittal Letter located within the original RFP document. Failure to do so may be cause for the PROPOSER to be rendered as non-responsive.

REMINDER:

SUBMISSION DUE DATE: FEBRUARY 18, 2022

SUBMISSION DEADLINE: 2:00PM

VIA NEGOMETRIX

1. The following are questions received prior to the deadline on Tuesday, February 7, 2022:

   Q.1: Section 11 – Bond Requirements, Sections A & B, provide the guidance for providing all bonds. For clarification purposes, section A states that the proposer must submit an Irrevocable Letter of Commitment from an A-or better-rated Surety Company to provide a $10,000,000 Performance & Payment Bond. Section B discusses when the Performance and Payment bond is to be provided to the Authority; when that time comes, will the Performance and Payment Bond need to be in the amount of $10,000,000, or will it be based on the estimated value of the project at that time?

   A.1: Please refer to Article 40 of the sample contract.

   Q.2: Can you please provide the names and titles of the Evaluation Committee members?

   A.2: Dr. Lori Vinikoor, Citizens' Advisory Committee Chair
   Patrick Carroll, Chief Operations Officer
   Mariana Feldpausch, CIS Operations Manager
   Colleen Robbs, Director of Equal Business Opportunity Office
   David Broten, Environmental Programs Manager

   Q.3: Could you clarify if the pricing provided for removing hazardous trees 12" in diameter or greater is for cutting the trees and placing them in the right-of-way to be collected as vegetative debris, or is it for the cutting, loading & hauling of the hazardous trees?

   A.3: Please refer to attached revised page REV16, Section 2.6.2.1.

   Q.4: Section 2.6.4 Securing Debris – Are we to understand that all loads of debris en route to a TDMS must be tarped or covered in some manner?

   A.4: Please refer to the attached revised pages REV19 and REV 20.

Q.5: Proposal Form 3 Pricing Proposal – Tipping fees are usually billed by the Contractor separately, at cost, with no markup; however, Line Item 4 calls for the rate to include disposal cost; by this, do you mean to include any tipping fees in our proposed rate?

A.5: Proposal Form 3 – Price Proposal, Part A, Item 4.0 requires the Proposer to include the disposal/recycling cost per cubic yard for the final destination of reduced yard waste debris. This rate and the final destination plan for wood chips is required under Part III, Proposal Submission Requirements, Section 3.2.6 General Operations Plan, Item 1, Mulch Disposal Plan.

Q.6: RFP Part II – Statement of Work states in Section 2.6.2.1 that the Authority will not compensate the Contractor for leaning trees less than 12" in diameter on a unit rate basis. Yet, Proposal Form 3 requests pricing for Hazardous Tree Removal and Hauling with one size category being 6" to 12.99" in diameter. Could you please clarify?

A.6: Please refer to attached revised page REV 16.

Q.7: On pg 34 it states that "PROPOSER who submits the Proposal with the lowest Total Proposal Price will receive 20 points." Can the Authority please confirm this is referring to the Total Proposed Price on Part A of the RFP Proposal Form 3?

A.7: Yes, Proposer with the lowest Total Proposal Price from Proposal Form 3 - Price Proposal, Part A, will receive 20 points.

Q.8: Will the Authority weigh the unit rate line items in Part A and C of the RFP Proposal Form 3 more heavily than the hourly rate line items in Part B of the RFP Proposal Form 3?

A.8: Proposal Form 3 – Price Proposal Total Proposal Price will be weighed for the Evaluation of Price Proposal as per page 32 of RFP.

Q.9: We are curious why the Authority did not apply an Affirmative Procurement Initiative to this procurement requiring S/M/WBE participation. Could you provide insight?

A.9: All work performed under this contract is to be in conformance with FEMA guidelines. These guidelines prohibit the use of locally based S/M/WBE programs. The Solid Waste Authority system is a locally based system and therefore, cannot be applied to this procurement. The Authority does encourage the use of S/M/WBE vendors in section 3.8.2 (C) of the RFP.

Q.10: Bonding Requirements: Regarding bonding requirements: Per Page 4, paragraph B of the RFP, the proposal bond must be in effect until any active-duty periods when the payment and performance bonds will take the place of proposal bond. Please clarify if the proposal bond must stay in effect for the entire 3-year term and possible 3-year renewal term even if the contract is never activated?

Page 4, paragraph A of the RFP states that the Proposer must submit an "Irrevocable Letter of Commitment" with the Proposal Bond "upon issuance of first Task Order. Given the amount/cost of bond and the length of the term, would the SWA be willing to revise the bonding requirement to read "letter of bonding ability" or "letter of bonding capacity" instead of "irrevocable letter of commitment"?

A.10: Yes, the proposal bond must stay in effect for the entire 3-year term and possible 3-year extension if the contract is never activated.

There will be no change to the irrevocable letter of commitment requirement.

Q.11: TDMS Bonus Points: How far away is a TDMS that would be eligible for the bonus points?

A.11: Please refer to attached revised page REV 29.

Q.12: Haul out of Ash: 1. There is currently a line item (5.0) for reduction of vegetation through air curtain incineration. Will the Authority consider adding a line item for haul out of ash to a final disposal site? 2. If no, under what line item should this be included? 3. If a new line item is added, can the Authority confirm it will be responsible for disposal fees for ash?

A.12: Please refer to the attached revised page REV 39.

Q.13: RFP: Please confirm the entire RFP does not need to be included in our proposal submittal.
A.13: It is solely at the Proposer's discretion as to the documents considered as proposal submittal.

2. **Pages 16, 19, 20, and 29, of the RFP have been revised and are hereby attached as REV 16, REV 19, REV 20, and REV 29.**

3. **PROPOSAL FORM 3 – PRICE PROPOSAL PART A AND PART C have been revised and is hereby attached as REV 39 and REV 41.**

ALL ELSE REMAINS THE SAME

Diane LeRay

Diane LeRay, CPPO, CPPB
Procurement Manager

2.6.2.1 Removal of Hazardous Leaning Trees and Hanging Limbs

a) Under this contract, work shall consist of all labor, equipment, fuel, and miscellaneous costs necessary to remove all hazardous trees six inches (6") or greater in diameter, measured four and a half feet (4.5') from the base of the tree or chest height and hanging limbs two inches (2") or greater in diameter existing in private and public right-of-way. Further, debris generated from the removal of hazardous trees and hanging limbs two inches (2") or greater existing in private and public right-of-way will be placed at the public right-of-way for removal as vegetative debris in accordance with Proposal Form 3, Price Proposal, Part A, Item 1.0A. Hazardous leaning trees less than six inches (6") in diameter, measured four and a half feet (4.5') from the base of the tree or at chest height, will be flush cut, and placed on the public right-of-way to be removed as vegetative debris. The AUTHORITY will not compensate the CONTRACTOR for leaning trees less than six inches (6") in diameter on a unit rate basis.

b) Removal and transportation of hazardous trees six inches (6") or greater in diameter and hanging limbs two inches (2") or greater in diameter existing in private and public right-of-way will be performed as identified by the AUTHORITY. All disaster specific eligibility guidelines regarding size and diameter of leaning trees will be communicated to the CONTRACTOR, in writing, by the AUTHORITY. In order for leaning or hazardous trees to be removed and eligible for reimbursement, the tree must satisfy a minimum of one (1) of the following requirements:

i) The tree is leaning in excess of 30° degrees in a direction that poses an immediate threat to public health, welfare, and safety.
ii) The tree is dead, twisted, or mangled as a direct result of the storm and a certified arborist can attest to the fact that the tree will die and potentially create a falling hazard to the public.

2.6.2.2 Removal of Hazardous Stumps

a) Under this contract, work shall consist of all labor, equipment, fuel, and miscellaneous costs necessary to remove all hazardous uprooted stumps 24 inches or greater in diameter, measured 24 inches from the base of the tree existing in private and public right-of-way. Further, debris generated from the removal of uprooted stumps existing in private and public right-of-way will be placed at the public right-of-way for removal as vegetative debris. Stumps measured 24 inches from the base of the tree and less than 24 inches in diameter will be considered normal vegetative debris and removed in accordance with with Proposal Form 3, Price Proposal, Part A, Item 1.0A. The AUTHORITY will not compensate hazardous stumps less than 24 inches in diameter on a unit rate basis and instead will be considered normal vegetative debris. The diameter of stumps less than 24 inches will be converted into a cubic yardage volume based on the published FEMA stump conversion table (In accordance with current FEMA public assistance guidelines) and removed under the terms and conditions of 2.6.2.

to be filled to capacity. Cyclone fence may be used as temporary tailgates if they comply with the following specifications:

1. Fencing must be permanently attached to one side of the truck bed.
2. After loading, the fencing must be tied to the other side of the truck bed at two places with heavy gauge wire.
3. Fencing must extend to the bottom of the bed.
4. After loading, bottom of fencing shall be tight against the bed of the truck and secured at a minimum of two locations.
5. Solid iron metal bars must be secured to both sides of the fencing.
6. There shall be no hand loaded equipment allowed.

B. The AUTHORITY or designee shall complete certifications indicating the type of vehicle, make and model, license plate number, equipment number, and measured maximum volume, in cubic yards, of the load bed of each piece of equipment utilized to haul debris. The measured volume of each piece of equipment shall be calculated from actual internal physical measurement performed and certified by the CONTRACTOR. Maximum volumes may be rounded up to the nearest cubic yard. The reported measured maximum volume of any load bed shall be the same as shown on the placards affixed to each piece of equipment. The AUTHORITY reserves the right to re-measure trucks and trailers at any time to verify reported capacity. If a truck and/or trailer are re-measured and the yardage capacity is determined to be lower, the lower yardage volume will be retroactive to the initial load and total volume adjusted accordingly.

C. All trucks and trailers utilized in hauling debris shall be equipped with a tailgate that will permit the vehicle to be loaded to capacity and effectively contain the debris on the vehicle while hauling. If installed, all sideboard extensions must remain in place throughout the operation, or the vehicle must be re-measured and remarked. All extensions to the bed are subject to acceptance or rejection at the sole discretion of the AUTHORITY or designee.

D. Trucks or equipment designated for use under this Agreement shall not be used for any other work during working hours. The CONTRACTOR shall not solicit work from private citizens or others to be performed in the designated Collection Service Area during the period of this Agreement. Under no circumstance will the CONTRACTOR mix debris hauled for others with debris hauled under this Agreement. Failure to comply will result in no payment to CONTRACTOR and the operator and vehicle will be declared ineligible to provide any additional emergency debris collection services. Any and all unapproved changes to placard will result in no payment to CONTRACTOR and the operator and vehicle will be declared ineligible to perform any additional emergency debris collection services.

2.6.4 Securing Debris

The CONTRACTOR shall be responsible for properly and adequately securing debris on each piece of equipment utilized to haul debris. Prior to leaving the loading site, the CONTRACTOR shall ensure that each load is secure and trimmed so that no debris extends horizontally beyond the bed of the equipment in any direction. All loose debris shall be reasonably compacted during loading and secured during transport.

2.6.5 Equipment Signage

Prior to commencing operations, the AUTHORITY or designee shall affix to each piece of equipment, signs or markings indicating the Owner Operator's name and a unique equipment identification number. One sign shall be placed on each side of the equipment. For those trucks, trailers and other equipment intended to haul debris, the maximum volume, in cubic yards, of the load bed shall also be shown. Each operator shall keep AUTHORITY certification with them at all times. Placards must remain on both sides of equipment.

2.6.6 Other Considerations

A. The CONTRACTOR shall assign and provide an Operations Manager (OM) to the AUTHORITY TDMS to serve as the principal liaison between the AUTHORITY Director, Customer Services or designee and the CONTRACTOR'S forces. The assigned OM must be knowledgeable of all facets of the CONTRACTOR'S operations and have authority in writing to commit the CONTRACTOR. The OM shall be on call 24 hours per day, seven (7) days per week and shall have electronic linkage capability for transmitting and receiving relevant contractual information and make arrangements for onsite accommodations. This linkage shall provide immediate contact via cell phone, Fax machine, and have Internet capabilities. The OM will participate in daily meetings and disaster exercises, functioning as a source to provide essential element information. The OM will report to the AUTHORITY Director, Customer Services or designee. This position will not require constant presence; rather the OM will be required to be physically capable of responding to the AUTHORITY Emergency Management Coordinator within 30 minutes of notification.

B. The CONTRACTOR shall be responsible for control of pedestrian and vehicular traffic in the work area. At a minimum, one flag person should be posted at each approach to the work area.

C. The CONTRACTOR shall supervise and direct the work, using skilled labor and proper equipment for all tasks. Safety of the CONTRACTOR'S personnel and equipment is the responsibility of the CONTRACTOR. Additionally, the CONTRACTOR shall pay for all materials, personnel, taxes, and fees necessary to perform under the terms of this contract.

D. Payment for debris hauled will be based on the quantity of debris hauled in cubic yards. Debris hauled to a TDMS will require a validated load ticket. Drivers will be given an electronic load tickets at the loading site by an AUTHORITY loading site monitor. The quantity of debris hauled will be estimated in cubic yards at the TDMS by an AUTHORITY TDMS monitor. The estimated quantity will be recorded on the electronic load ticket. The AUTHORITY TDMS monitor will retain one copy of the paper load ticket and the driver will retain the remaining copies of the load ticket. Debris being hauled to

3.2.5 Experience and Qualifications Narrative

PROPOSER shall demonstrate the following:

A. Provide a comprehensive description of all mobilizations (minimum of three) performed as a prime contractor for disaster debris services collecting and processing a minimum of 1 million cubic yards of debris collected from public right of ways. PROPOSERS unable to identify three or more mobilizations meeting the 1 million cubic yard threshold, per each mobilization, are requested to submit all relevant experience they have that documents the ability to perform the services (right of way collection and TDMS management) as requested by this RFP. No limitation exists for the period of time a PROPOSER may go back to describe the experience as requested. Do not show work performed as a sub-contractor. **(PROPOSAL FORM 6 - FORM A)**

   For each mobilization the PROPOSER is requested to identify the following:

   - Name and type of storm event
   - Date and location
   - Narrative of disaster debris services of work performed during mobilization event
   - Total value of contract for services performed
   - Number of cubic yards of debris collected by PROPOSER from public right of ways during mobilization
   - Number of cubic yards of debris handled by PROPOSER at TDMS during mobilization
   - Name, address, and telephone number of customers point of contact for reference purposes.

B. List all emergency debris removal and disposal contracts performed in the last three (3) years as a prime contractor. **(PROPOSAL FORM 6 - FORM B)**

3.2.6 General Operations Plan

PROPOSER shall provide the following:

1. At a minimum a detailed Mulch Disposal Plan. The AUTHORITY is committed to recycling and or beneficial re-use of mulch. Additional consideration will be taken for Beneficial Re-Use Plan. PROPOSER is required to provide a full description of how PROPOSER intends to dispose and or re-use one million (1,000,000) cubic yards of mulch. PROPOSER is required to address how PROPOSER intends to comply with all federal, state, and local guidelines pertaining to mulch disposal. PROPOSER is also required to submit any agreement(s) he/she currently has for the disposal and or beneficial re-use of mulch. PROPOSER is required to give a full description of their end use plan.

2. At a minimum a detailed TMDS Plan pertaining to Construction Debris (C & D) Recycling and or Reduction for estimated five hundred thousand (500,000) cubic yards. The AUTHORITY requests that PROPOSER implements a recycling and/or reduction program for C & D material to minimize amount of debris that will go to a landfill. PROPOSER is requested to address programs they will implement to facilitate recycling and or reduction of construction debris waste.

3. Resumes for the PROPOSER'S management team and all key personnel who will be assigned to the agreement to include, among other things: names, job titles, responsibilities, and applicable debris management experience.

4. Provide private TDMS available for use within Palm Beach County. Provide letters of agreements with the owners for use of such sites. Identify the location of the sites and site

PROPOSAL FORM 3 – PRICE PROPOSAL

PART A – VOLUME BASED PRICING FOR 3,000,000 CUBIC YARD (CY) DEBRIS DISASTER

ITEM/DESCRIPTION	ESTIMATED QUANTITY	UNIT	PRICE PER CY	EXTENSION
1.0 Public Property and Right of Way Collection, Loading and Hauling to a designated TDMS.				
A. Vegetation	2,500,000	CY		
B. Construction Debris / Mixed Debris	500,000	CY		
2.0 TDMS operation to include placement of monitoring towers, portable toilets, keeping on-site and adjacent roads area clean of trash and garbage, debris acceptance, pile management, and Phase I Reclamation.	3,000,000	CY		
3.0 Processing of debris through grinding and/or chipping.	2,500,000	CY		
4.0 Loading, hauling and disposing wood chips to final destination. ***(This rate includes disposal cost)***	1,000,000	CY		
5.0 Loading and hauling of construction debris and/or mixed debris from TDMS to a permitted C&D recycling facility or any other designated Disposal Facility. ***(This rate <u>shall not</u> include disposal cost). Based on miles from TDMS to final destination– 1 way.***				
A. 0 ≤ 20 miles	500,000	CY		
B. > 20 ≤ 50 miles	500,000	CY		
C. > 50 ≤ 100 miles	500,000	CY		
AVERAGE: (Item 6.0 A-C)				
AVERAGE: (Item 5.0 A-C) **X 500,000** CY =				$
TOTAL PROPOSAL PRICE: (Items 1.0 - 5.0)				$

PROPOSER MUST PROVIDE PRICE FOR ALL LINE ITEMS 1 THRU 6. FAILURE TO DO SO MAY RENDER YOUR PROPOSAL TO BE DEEMED NON-RESPONSIVE.

Unit Prices, unless otherwise indicated, shall include all labor (operators, laborers, supervisors) and materials including but not limited to: supplies, equipment maintenance, repairs, repair parts, fuels, lubricants, cellular phones, transportation, and housing, if required, necessary to accomplish the project. The quantities and distributions are estimated for the purpose of making an award. Locations of sites, debris quantities, destinations, material densities, etc. may differ substantially in an actual disaster.

Assumptions: 3,000,000 cubic yards of debris consisting of 2,500,000 cubic yards of vegetation debris and 500,000 cubic yards of mixed debris.

PROPOSAL FORM 3 – PRICE PROPOSAL

PART C – UNIT COST SCHEDULE

ITEM	HAZARDOUS STUMP REMOVAL, HAULING, AND DISPOSAL	UNIT	UNIT COST
1.	24-inch diameter to 48.99-inch diameter	Stump	
2.	49-inch diameter and greater	Stump	
3.	Stump Fill Dirt – Fill dirt for stump holes after removal	CY	
	HAZARDOUS HANGING LIMBS (HANGERS) To include removal of all hanging limbs. Limbs to be cut and placed on the right of way for collection as vegetative debris.		
4.	2-inch diameter and greater	Tree	
	HAZARDOUS TREE REMOVAL Trees to be flush cut at ground level and placed on the right of way for removal as vegetative debris.		
5.	6-inch diameter to 11.99-inch diameter	Tree	
6.	12-inch diameter to 23.99-inch diameter	Tree	
7.	24-inch diameter to 35.99-inch diameter	Tree	
8.	36-inch diameter to 47.99-inch diameter	Tree	
8.	48-inch diameter and greater	Tree	

NOTE:
The following is information only and will NOT be considered in the evaluation of this RFP

The AUTHORITY reserves the right to use this contract to handle small quantities of debris removal and as support for our Franchise Contracts as needed. Below is a daily rate to remove debris. The AUTHORITY will pay for the disposal cost. There is no requirement to provide a rate, however if you do, we expect your company to honor this special service and respond within 48 hours at the rate below.

COLLECTION SERVICE ONLY	
EQUIPMENT	DAILY RATE (10 HRS/DAY)
Knuckleboom Loader and Operator	$

DocuSign Envelope ID: BAA9924A-B365-44D4-95BB-4AAB9E87ACFD

YOUR PARTNER FOR
SOLID WASTE SOLUTIONS

AGREEMENT FOR

HURRICANE/DISASTER DEBRIS REMOVAL, REDUCTION AND DISPOSAL

BETWEEN

SOLID WASTE AUTHORITY OF PALM BEACH COUNTY

AND

PHILLIPS AND JORDAN, INC.

AGREEMENT NO. 22-201C

SOLID WASTE AUTHORITY OF PALM BEACH COUNTY
7501 NORTH JOG ROAD
WEST PALM BEACH, FLORIDA 33412
(561) 640-4000

DocuSign Envelope ID: BAA9924A-B365-44D4-95BB-4AAB9E87ACFD

TABLE OF CONTENTS

ARTICLE		PAGE
1.	Effective Date and Incorporation of Recitals	1
2.	Services to be performed by Contractor	1
3.	Compensation	1
4.	Insurance	2
5.	Standard of Care	3
6.	Indemnification	3
7.	Independent Contractor	3
8.	Authority to Conduct Business	4
9.	Compliance with Laws	4
10.	Sub-Contractor	4
11.	Federal and State Taxes	4
12.	Availability of Funds	4
13.	Authority's Responsibilities	4
14.	Default	4
15.	Termination for Convenience	5
16.	Uncontrollable Forces	5
17.	Jurisdiction, Venue, Waiver of Jury Trial and Remedies	5
18.	Commercial Non-Discrimination Policy	6
19.	Waiver	6
20.	Severability	6
21.	Entirety of Agreement and Modification	6
22.	Successors and Assigns	7
23.	Contingent Fees	7
24.	Truth-in-Negotiation Certificate	7
25.	Ownership of Documents	7
26.	Public Records, Access and Audits	7
27.	Inspector General	9
28.	Notice	9
29.	Contract Administration	10
30.	Key Personnel	10
31.	Equal Business Opportunity Program	10
32.	Scrutinized Companies	10
33.	Agreements with other Governmental Entities	11
34.	Third Party Beneficiary Disclaimer	11
35.	E-Verify – Employment Eligibility	11
36.	Confidentiality	12
37.	Payment Adjustment Schedule	12
38.	Order of Agreement Activation/Location Assignment	13
39.	Task Order/Performance	13
40.	Bonds	13
41.	Florida Highway Administration (FHWA) Form 1273	14
42.	Buy America Requirements	14
43.	Disadvantaged Business Enterprises	14
44.	Certification Regarding Suspension and Debarment	15
45.	Access to Records and Their Retention	15
46.	Audit Requirements	16
47.	National Environmental Policy Act (NEPA)	16

DocuSign Envelope ID: BAA9924A-B365-44D4-95BB-4AAB9E87ACFD

48. Americans with Disabilities Act 16
49. Compliance with Title VI, Title VII and other Federal Laws and Regulations 16
50. Convict Labor Prohibition 16
51. Certification Regarding Lobbying Activities 16
52. DHS Seal, Logo, and Flags 16
53. No Obligation by Federal Government 16
54. Program Fraud and False or Fraudulent Statement or Related Acts 17
Contract Execution 18

EXHIBITS

A. Scope of Work 19
B. Fee Schedule 36

ATTACHMENTS

A. Task Order Disaster Debris Management 39
B. Pre-Approved Temporary Debris Management Sites Map 40
C. Public Assistance Program and Policy Guide 41
D. Mobilization Schedule 42
E. FHWA Form 1273 43
F. Buy America Requirements 55
G. Performance and Payment Bond 56

DocuSign Envelope ID: BAA9924A-B365-44D4-95BB-4AAB9E87ACFD

AGREEMENT FOR PROFESSIONAL SERVICES

This Agreement is made and entered into as of MAY 4th, 2022, (hereinafter referred to as the Agreement) by and between **Solid Waste Authority of Palm Beach County**, a dependent special district created by Chapter 2001-331, Laws of Florida, as amended, (hereinafter referred to as AUTHORITY) and **PHILLIPS AND JORDAN, INC.,** (hereinafter referred to as CONTRACTOR and when referred to collectively with AUTHORITY, the Parties), a Corporation, whose Federal Employer ID Number is **56-0694573**;

Whereas, in accordance with the AUTHORITY's Request for Proposals No. 22-201/DL, solicited to employ the services of the CONTRACTOR for the purpose of providing Hurricane/Disaster Debris Removal, Reduction and Disposal, and;

Whereas, CONTRACTOR represents it is qualified, capable and prepared to provide such services.

Now, therefore, in consideration of the promises contained herein and other good and valuable consideration, the receipt of which is acknowledged by the other, the parties hereto agree as follows:

ARTICLE 1 - EFFECTIVE DATE AND INCORPORATION OF RECITALS

The foregoing recitals are hereby incorporated herein by reference.

1.1 The Effective Date of this Agreement shall be **May 8, 2022** and the Initial Term of this Agreement is for three (3) years and shall expire on **May 7, 2025,** unless terminated earlier as provided for herein.

1.2 The AUTHORITY shall have the option of extending this Agreement for three (3) additional years, as approved by the AUTHORITY's Board or designee, in its sole and unfettered discretion, on the same terms and conditions. Such extension shall be in the form of a written Amendment to the Agreement executed by both Parties.

1.3 The continuance of this Agreement from year-to-year is contingent upon successful annual recertification of the CONTRACTOR's capabilities. The recertification process will be a review of the fiscal (bankruptcy, etc.), logistical (equipment availability, etc.), and moral (conviction for environmental crime, conviction for crime against a public entity, etc.) responsibility of the CONTRACTOR and a determination by the AUTHORITY, based on this review, of whether or not the CONTRACTOR continues to be a viable firm to provide the services described in this Agreement.

ARTICLE 2 - SERVICES TO BE PERFORMED BY CONTRACTOR

CONTRACTOR shall perform the services as specifically stated in the Scope of Work, attached hereto and made a part hereof as Exhibit A, and/or as may be specifically designated and authorized by the AUTHORITY. Such authorizations will be referred to as Task Orders. Each Task Order shall set forth a specific scope of services, rate/amount of compensation, completion date, and other pertinent details of the task being authorized. The AUTHORITY, by virtue of this Agreement, gives the CONTRACTOR no guarantee of any work/services or any specific amount of work/services that may be accomplished during the period this Agreement is in full force and effect.

ARTICLE 3 - COMPENSATION

3.1 The AUTHORITY shall pay CONTRACTOR in accordance with the Fee Schedule, attached hereto and made a part hereof as Exhibit B. In addition, the Parties may negotiate a lump sum or not-to-exceed amount

on a per-project basis on an individual Task Order.

3.2 The CONTRACTOR shall submit semi-monthly invoices for services rendered. All invoices must reference the Task Order number. Invoices shall include a statement of progress and appropriate audit quality detail to satisfy the Federal Emergency Management Agency (FEMA) requirements.

3.3 Payment of CONTRACTOR by AUTHORITY is not contingent upon the AUTHORITY being reimbursed by the Federal Emergency Management Agency (FEMA). Payment to CONTRACTOR will be made for any work directed by the AUTHORITY which is determined by Federal and State agencies to be ineligible for reimbursement.

3.4 Payment of invoices shall be within thirty (30) days after receipt of a correct, fully documented invoice. All invoices shall be delivered to:

Solid Waste Authority of Palm Beach County
7501 North Jog Road
West Palm Beach, Florida 33412
Attn: Accounts Payable

3.5 CONTRACTOR will clearly mark its final/last billing with the words "Final Invoice". This will certify that all services have been fully performed under this Agreement and that all charges and costs have been invoiced to the AUTHORITY. Thereupon, this account will be closed and any additional charges or costs, not included in the Final Invoice, shall be waived by CONTRACTOR. The AUTHORITY shall not be liable for the payment of any such additional charges or costs not included in the Final Invoice.

3.6 The AUTHORITY will retain 5% of the payment under each Task Order until such time as the entire project is completed to the AUTHORITY's satisfaction and all subcontractors and any material suppliers verify that they have been paid.

ARTICLE 4 - INSURANCE

4.1 During the performance of the Services under this Agreement, CONTRACTOR shall maintain the following insurance policies written by an insurance company authorized to do business in Florida and acceptable to the AUTHORITY.

1. **General Liability** Insurance with bodily injury limits of not less than $1,000,000 for each occurrence, and with property damage limits of not less than $1,000,000 for each occurrence.

2. **Automobile Liability** Insurance with bodily injury limits of not less than $5,000,000 for each person and not less than $5,000,000 for each accident and with property damage limits of not less than $5,000,000 for each accident.

3. **Workers' Compensation** Insurance in accordance with statutory requirements and Employer's Liability Insurance with limits of not less than $500,000 for each accident, $500,000 for each disease, and $500,000 aggregate.

4. **Excess Liability** Insurance with limits of not less than $10,000,000 for each occurrence and annual aggregate.

4.2 Deductible amounts shall not exceed 5% of the total amount of required insurance in each category. Should any policy contain any unusual exclusions, said exclusions shall be so indicated on the certificate(s) of insurance.

4.3 CONTRACTOR shall furnish AUTHORITY **Certificates of Insurance**, which shall include a provision that

policy cancellation, non-renewal or reduction of coverage will not be effective until at least **thirty (30) days** after written notice has been given to the AUTHORITY. CONTRACTOR shall include AUTHORITY as an **Additional Insured** on the General Liability and Automobile Liability insurance policy required by this Agreement. All of CONTRACTOR'S subcontractors shall be required to include AUTHORITY and CONTRACTOR as **Additional Insureds** on all of their liability insurance policies.

4.4 CONTRACTOR shall ensure that CONTRACTOR's naming of the AUTHORITY as an additional insured on its General Liability and Automobile Liability insurance policies pursuant to this Agreement shall afford coverage for the negligent, reckless, intentionally wrongful or willful acts of CONTRACTOR and other persons employed or utilized by the CONTRACTOR in the performance of this Agreement.

4.5 In the event that subcontractors used by the CONTRACTOR do not have insurance, or do not meet the required insurance limits herein, CONTRACTOR shall indemnify and hold harmless the AUTHORITY for any claim(s) in excess of the subcontractor's insurance coverage.

4.6 The CONTRACTOR shall not commence work under this Agreement until all insurance required as stated herein has been obtained and such insurance has been approved by the AUTHORITY.

ARTICLE 5 - STANDARD OF CARE

5.1 The CONTRACTOR shall exercise the same degree of care, skill, and diligence in the performance of the Services performed pursuant to this Agreement as is ordinarily provided by comparable, qualified professionals under similar circumstances. The CONTRACTOR shall, at no additional cost to AUTHORITY, re-perform services which fail to satisfy the foregoing standard of care.

5.2 The CONTRACTOR warrants that all services shall be performed by skilled and competent personnel to the highest professional standards in the field.

ARTICLE 6 - INDEMNIFICATION

6.1 **GENERAL**

Having considered the risks and potential liabilities that may exist during the performance of the services and in consideration of the promises included herein, AUTHORITY and CONTRACTOR agree to allocate such liabilities in accordance with this Article 6.

6.2 **INDEMNIFICATION**

The CONTRACTOR shall indemnify and hold harmless the AUTHORITY, and its officers and employees, from all liabilities, damages, losses, and costs, including, but not limited to, reasonable attorney's fees, to the extent caused by the negligence, recklessness, or intentionally wrongful conduct of the CONTRACTOR and other persons employed or utilized by the CONTRACTOR in the performance of the Agreement.

6.3 **SURVIVAL**

Upon completion of all services, obligations and duties provided for in this Agreement, or in the event of termination of this Agreement for any reason, the terms and conditions of this Article shall survive.

ARTICLE 7 - INDEPENDENT CONTRACTOR

7.1 The CONTRACTOR is, and shall be, in the performance of all work services and activities performed under this Agreement, an Independent Contractor, and not an employee, agent, or servant of the AUTHORITY. All persons engaged in any of the work or services performed pursuant to this Agreement shall at all times, and in all places, be subject to the CONTRACTOR'S sole direction, supervision, and control. The CONTRACTOR shall exercise control over the means and manner in which it and its employees perform the

work, and in all respects the CONTRACTOR'S relationship and the relationship of its employees to the AUTHORITY shall be that of an Independent Contractor and not as employees or agents of the AUTHORITY.

7.2 The CONTRACTOR does not have the power or authority to bind the AUTHORITY in any promise, agreement or representation other than specifically provided for in this Agreement.

ARTICLE 8 - AUTHORITY TO CONDUCT BUSINESS

The CONTRACTOR hereby represents and warrants that it has and will continue to maintain all licenses and approvals required to conduct its business and perform all requirements in this Agreement.

ARTICLE 9 - COMPLIANCE WITH LAWS

In performance of the Services, the CONTRACTOR will comply with applicable regulatory requirements including federal, state, special district, and local laws, rules, regulations, orders, codes, criteria, and standards.

ARTICLE 10 - SUB-CONTRACTING

10.1 The AUTHORITY reserves the right, in its sole and unfettered discretion, to accept the use of a subcontractor or to reject the selection of a particular subcontractor under this Agreement.

10.2 If a subcontractor fails to perform or make progress, as required by this Agreement, and it is necessary to replace the subcontractor to complete the work in a timely fashion, the CONTRACTOR shall promptly do so, subject to acceptance of the new subcontractor by the AUTHORITY.

ARTICLE 11 - FEDERAL AND STATE TAXES

The AUTHORITY is exempt from Federal Tax and State Sales and Use Taxes. Upon request, the AUTHORITY will provide an exemption certificate to CONTRACTOR. The CONTRACTOR shall not be exempted from paying sales tax to its suppliers for materials to fulfill contractual obligations with the AUTHORITY, nor shall the CONTRACTOR be authorized to use the AUTHORITY'S Tax Exemption Number in securing such materials.

ARTICLE 12 - AVAILABILITY OF FUNDS

The obligations of the AUTHORITY under this Agreement are subject to the availability of funds lawfully appropriated for its purpose by the Board of the Solid Waste Authority of Palm Beach County.

ARTICLE 13 - AUTHORITY'S RESPONSIBILITIES

AUTHORITY shall be responsible for providing access to all project sites, and providing information on hand required by CONTRACTOR, including existing reports, studies, financial information, and other required data that are available in the files of the AUTHORITY.

ARTICLE 14 - DEFAULT

14.1 The AUTHORITY may, by written notice of default to the CONTRACTOR, terminate the Agreement in whole or in part if the CONTRACTOR: a) fails to satisfactorily perform any provisions of this Agreement; or b) fails to make progress so as to endanger performance under the terms and conditions of this Agreement; or c) repeatedly fails to perform; or d) does not remedy any such failure within a period of ten (10) days (or such period as the Director of Purchasing Services may authorize in writing) after receipt of notice from the Director of Purchasing Services specifying such failure. In the event the AUTHORITY terminates this Agreement in whole or in part because of default of the CONTRACTOR, the AUTHORITY may, in its sole

and unfettered discretion, procure goods and/or services similar to those required under this Agreement and the CONTRACTOR shall be liable for any excess costs incurred due to this action.

14.2 If it is determined that the CONTRACTOR was not in default or that the default was excusable (e.g., failure due to causes beyond the control of, or without the fault or negligence of the CONTRACTOR), the rights and obligations of the parties shall be those provided in Article 15 – Termination for Convenience.

ARTICLE 15 – TERMINATION FOR CONVENIENCE

15.1 The Director of Purchasing Services may, whenever the interests of the AUTHORITY so require, terminate this Agreement, in whole or in part, for the convenience of the AUTHORITY. The Director of Purchasing Services shall give five (5) business days prior written Notice of Termination to the CONTRACTOR, specifying the portions of the Agreement to be terminated and when the termination is to become effective. If only portions of the Agreement are terminated, the CONTRACTOR has the right to withdraw, without adverse action by the AUTHORITY, from the entire Agreement.

15.2 Unless directed differently in the Notice of Termination, the CONTRACTOR shall incur no further obligations in connection with the terminated work and shall stop work to the extent specified on the date given in the Notice of Termination. Additionally, unless directed differently, the CONTRACTOR shall terminate outstanding orders and/or subcontracts related to the terminated work.

15.3 Unless the CONTRACTOR is in breach of this Agreement, the CONTRACTOR shall be paid for services rendered to the AUTHORITY'S satisfaction through the date of termination specified in the Notice of Termination.

ARTICLE 16 - UNCONTROLLABLE FORCES

16.1 Neither the AUTHORITY nor CONTRACTOR shall be considered to be in default of this Agreement if delays in or failure of performance shall be due to Uncontrollable Forces, the effect of which, by the exercise of reasonable diligence, the non-performing party could not avoid. The term "Uncontrollable Forces" shall mean any event which results in the prevention or delay of performance by a party of its obligations under this Agreement and which is beyond the reasonable control of the nonperforming party. It includes, but is not limited to fire, flood, earthquakes, storms, lightning, epidemic, pandemic, war, riot, civil disturbance, sabotage, and governmental actions.

16.2 Neither party shall, however, be excused from performance if nonperformance is due to forces which are preventable, removable, or remediable and which the nonperforming party could have, with the exercise of reasonable diligence, prevented, removed or remedied with reasonable dispatch. The non-performing party shall, within a reasonable time of being prevented or delayed from performance by an uncontrollable force, give written notice to the other party describing the circumstances and uncontrollable forces preventing continued performance of the obligations of this Agreement.

ARTICLE 17 – JURISDICTION, VENUE, WAIVER OF JURY TRIAL AND REMEDIES

This Agreement shall be governed by the laws of the State of Florida. Any and all legal action necessary to enforce the Agreement shall be in a State court of competent jurisdiction located exclusively in Palm Beach County. With the exception of the choice of law and venue provisions contained herein, no remedy conferred upon any party is intended to be exclusive of any other remedy, and each and every such remedy shall be cumulative and shall be in addition to every other remedy given hereunder or now or hereafter existing at law or in equity. No single or partial failure by any party to exercise any right, power, or remedy hereunder, shall preclude that party from exercising that right, power or remedy in the future. **THE AUTHORITY AND CONSULTANT FREELY AND VOLUNTARILY AGREE TO WAIVE ITS RESPECTIVE RIGHT TO A JURY TRIAL ON ANY ISSUE(S) SO TRIABLE.**

ARTICLE 18 – COMMERCIAL NON-DISCRIMINATION POLICY

As a condition of entering into this Agreement, the CONTRACTOR represents and warrants that it will comply with the AUTHORITY's Commercial Non-Discrimination Policy, as described in Section 6.3 of the AUTHORITY's Purchasing Manual, including subsequent amendments thereto, if any. As part of such compliance, the CONTRACTOR shall not discriminate on the basis of race, color, religion, ancestry or national origin, gender, age, marital status, familial status, sexual orientation, gender identity or expression, disability, or genetic information in the solicitation, selection, hiring or commercial treatment of subcontractors, vendors, suppliers, or commercial customers, nor shall the CONTRACTOR retaliate against any person for reporting instances of such discrimination. The CONTRACTOR shall provide equal opportunity for subcontractors, vendors and suppliers to participate in all of its public sector and private sector subcontracting and supply opportunities, provided that nothing contained in this clause shall prohibit or limit otherwise lawful efforts to remedy the effects of marketplace discrimination that have occurred or are occurring in the AUTHORITY's relevant marketplace in Palm Beach County. The CONTRACTOR understands and agrees that a material violation of this clause shall be considered a material breach of this Agreement and may result in termination of this Agreement, disqualification or debarment of the CONTRACTOR from participating in AUTHORITY contracts, or other sanctions. This clause is not enforceable by or for the benefit of, and creates no obligation to, any third party. The CONTRACTOR agrees and understands that the provisions of Section 6.3 of the AUTHORITY's Purchasing Manual are incorporated herein by reference and that the CONTRACTOR is familiar with the contents of same.

ARTICLE 19 - WAIVER

A waiver by either AUTHORITY or CONTRACTOR of any breach of this Agreement shall not be binding upon the waiving party unless such waiver is in writing. In the event of a written waiver, such a waiver shall not affect the waiving party's rights with respect to any other or further or subsequent breach. The making or acceptance of a payment by either party with knowledge of the existence of a default or breach shall not operate or be construed to operate as a waiver of any further or subsequent default or breach.

ARTICLE 20 - SEVERABILITY

20.1 The invalidity, illegality, or unenforceability of any provision of this Agreement, or the occurrence of any event rendering any portion or provision of this Agreement void, shall in no way affect the validity or enforceability of any other portion or provision of the Agreement. Any void provision shall be deemed severed from the Agreement and the balance of the Agreement shall be construed and enforced as if the Agreement did not contain the particular portion or provision held to be void. The parties further agree to reform the Agreement to replace any stricken provision with a valid provision that comes as close as possible to the intent of the stricken provision.

20.2 The provisions of this section shall not prevent the entire Agreement from being void if a provision which is of the essence of the Agreement is determined to be void.

ARTICLE 21 - ENTIRETY OF AGREEMENT AND MODIFICATION

The AUTHORITY and the CONTRACTOR agree that this Agreement, including Exhibits and Attachments, and any matters incorporated by specific reference set forth the entire agreement between the parties, and that there are no promises or understandings other than those stated herein. This Agreement supersedes all prior agreements, contracts, proposals, representations, negotiations, letters or other communications between the AUTHORITY and CONTRACTOR pertaining to the services, whether written or oral. None of the provisions or terms and conditions contained in this Agreement may be added to, amended, modified, superseded or otherwise altered except by written instrument executed by the parties thereto.

ARTICLE 22 - SUCCESSORS AND ASSIGNS

AUTHORITY and CONTRACTOR each binds itself and its partners, successors, executors, administrators, assigns and legal representatives to the other party and its partners, successors, executors, administrators, assigns and legal representative. CONTRACTOR shall not assign this Agreement without the prior express written approval of the AUTHORITY in its sole discretion via executed amendment.

ARTICLE 23 - CONTINGENT FEES

The CONTRACTOR warrants that it has not employed or retained any company or person, other than a bona fide employee working solely for the CONTRACTOR to solicit or secure this Agreement and that it has not paid or agreed to pay any person, company, corporation, individual or firm, other than a bona fide employee working solely for the CONTRACTOR, any fee, commission, percentage, gift or any other consideration contingent upon or resulting from the award or making of this Agreement.

ARTICLE 24 - TRUTH-IN-NEGOTIATION CERTIFICATE

24.1 Execution of this Agreement by the CONTRACTOR shall act as the execution of a truth-in-negotiation certificate certifying that the wage rates and costs used to determine the compensation provided for in this Agreement are accurate, complete, and current as of the Effective Date of the Agreement.

24.2 The said rates and costs shall be adjusted to exclude any significant sums should the AUTHORITY determine that the rates and costs were increased due to inaccurate, incomplete or noncurrent wage rates or due to inaccurate representations of fees paid to outside consultants. The AUTHORITY shall exercise its rights under this 'Certificate" within one (1) year following payment.

ARTICLE 25 - OWNERSHIP OF DOCUMENTS

CONTRACTOR shall be required to cooperate with other consultants relative to providing information requested in a timely manner and in the specified form. Any and all documents, records, disks, original drawings, or other information shall become the property of the AUTHORITY for its use and/or distribution as may be deemed appropriate by the AUTHORITY in its sole and unfettered discretion.

ARTICLE 26 - PUBLIC RECORDS, ACCESS AND AUDITS

26.1 It is the intent of this Article to maintain compliance with the Florida Public Records Law, Ch. 119, Florida Statutes, as amended.

26.2 **DESIGNATED RECORDS CUSTODIAN CONTACT INFORMATION:**

IF THE CONTRACTOR HAS QUESTIONS REGARDING THE APPLICATION OF CHAPTER 119, FLORIDA STATUTES, THE CONTRACTOR'S DUTY TO PROVIDE PUBLIC RECORDS RELATING TO THIS AGREEMENT, CONTACT THE CUSTODIAN OF PUBLIC RECORDS AT:
RECORDS MANAGER
SOLID WASTE AUTHORITY OF PALM BEACH COUNTY
7501 NORTH JOG ROAD
WEST PALM BEACH, FL 33412
561-640-4000 EXT. 4606
RECORDSCUSTODIAN@SWA.ORG

26.3 The CONTRACTOR shall maintain records related to all charges, expenses, and costs incurred in estimating and performing the work, in accordance with the timeframes and classifications for records retention as per the General Records Schedule GS1-SL for State and Local Government Agencies (see: https://dos.myflorida.com/library-archives/records-management/general-records-schedules/) after completion or termination of this Contract. Upon AUTHORITY'S request, CONTRACTOR shall provide AUTHORITY with access to such records during normal business hours at a location within Palm Beach County for purposes of inspection or audit.

26.4 Notwithstanding anything herein to the contrary, the CONTRACTOR expressly acknowledges that: i) it is providing a specific service to the AUTHORITY in the performance of this Contract; ii) acting on behalf of the AUTHORITY in the performance of this Contract; iii) that it has read and is familiar with the Florida Public Records Law, Ch. 119, Florida Statutes, as amended, and both understand its responsibility and obligation to comply with this law; and iv) to the extent any question(s) arise regarding its duties to produce public records, it shall contact the Records Manager with same.

26.5 Any public records requests directed to, or related in any way to this contract shall be directed solely to the Records Manager. If the requested records are not in the possession of the Records Manager, they shall immediately notify the CONTRACTOR and the CONTRACTOR must provide the records or allow access to the records within a reasonable time. A CONTRACTOR who fails to provide the records to the public agency within a reasonable time may be subject to penalties under Florida Statutes (F.S) §119.10, and §119.10(2) provides that a person who willfully and knowingly violates the Public Records Act commits a misdemeanor of the first degree, which is punishable by up to a year in jail and a fine not to exceed $1,000.

26.6 Therefore, the CONTRACTOR is required to:

1) Keep and maintain public records that ordinarily and necessarily would be required by the AUTHORITY in order to perform the service;

2) Upon AUTHORITY's request from the AUTHORITY's Records Manager; provide the AUTHORITY with a copy of the requested records to allow the records to be inspected or copied within a reasonable time on the same terms and conditions that the AUTHORITY would provide the records at a cost that does not exceed the cost provided by Florida law;

3) Ensure that public records that are exempt or confidential and exempt from public records disclosure requirements are not disclosed except as authorized by law for the duration of the Agreement term and following the completion of the Agreement if the CONTRACTOR does not transfer the records to the AUTHORITY; and

4) Upon completion of the Agreement, transfer at no cost to the AUTHORITY, all public records in possession of the CONTRACTOR or keep and maintain public records to the AUTHORITY upon completion or termination of the Agreement; the CONTRACTOR shall destroy any duplicate public records that are exempt or confidential and exempt from public records disclosure requirements. If the CONTRACTOR keeps and maintains public records upon completion of the Agreement, the CONTRACTOR shall meet all applicable requirements for retaining public records. All records stored electronically must be provided to the AUTHORITY, upon request from the AUTHORITY's Records Manager, either during performance of the Agreement or after termination or completion of the Agreement in a format that is compatible with the information technology systems of the AUTHORITY.

26.7 Failure of the CONTRACTOR to comply with these requirements shall be a material breach of this Contract.

26.8 CONTRACTOR shall maintain financial and program records to justify all charges and costs incurred in performing the work for at least three (3) years following final payment by the AUTHORITY as Federal Emergency Management Agency (FEMA) sub-grantee as required by 2 CFR 200.333. The AUTHORITY shall have access to such books, records, and documents as required in this section for the purpose of inspection or audit.

26.9 In the event records retention requirements in Florida Statutes Chapter 119 and 257 exceed those of FEMA, the records shall be retained to comply with the State of Florida requirements.

ARTICLE 27 - INSPECTOR GENERAL

Palm Beach County has established the Office of the Inspector General (OIG), Ordinance No. 2009-049 which is authorized and empowered to review past, present and proposed county contracts, transactions, accounts and records. The AUTHORITY has entered into an Interlocal Agreement (ILA) for Inspector General Services. This agreement provides for the Inspector General to provide services to the AUTHORITY in accordance with the authority, functions and powers set out in the Palm Beach County Office of Inspector General Ordinance. All parties doing business with the AUTHORITY and receiving AUTHORITY funds shall fully cooperate with the Inspector General including providing access to records relating to this agreement. The Inspector General has the power to subpoena witnesses, administer oaths, require the production of records, and audit, investigate, monitor, and inspect the activities of the CONTRACTOR, its officers, agents, employees, and lobbyists in order to ensure compliance with contract specifications and detect corruption and fraud. Failure to cooperate with the Inspector General or interference or impeding any investigation shall be in violation of Ordinance 2009-049, and punished pursuant to Section 125.69, Florida Statutes, in the same manner as a second-degree misdemeanor.

ARTICLE 28 - NOTICE

Any notice, demand, communication, or request required or permitted hereunder shall be in writing and delivered in person or sent by certified mail, postage prepaid as follows:

AS TO AUTHORITY

Solid Waste Authority of Palm Beach County
7501 North Jog Road
West Palm Beach, Florida 33412

Attention: Executive Director
Office No.: 561-640-4000 Fax No.: 561-640-3400

AS TO CONTRACTOR

Phillips and Jordan, Inc.
10142 Parkside Drive
Suite 500
Knoxville, TN. 37922

Attention: Tommy Webster, Program Manager – Disaster Services
Office No.: 865-392-3013 Fax No.: 865-688-8369 E-Mail: twebster@pandj.com

Notices shall be effective when received at the addresses as specified above. Changes in the respective addresses to which such notice is to be directed may be made from time to time by either party by written notice to the other

party. Facsimile transmission is acceptable notice effective when received, however, facsimile transmissions received (i.e.; printed) after 5:00 p.m. or on weekends or holidays, will be deemed received on the next business day. The original of the notice must additionally be mailed as required herein.

Nothing contained in this Article shall be construed to restrict the transmission of routine communications between representatives of CONTRACTOR and AUTHORITY.

ARTICLE 29 - CONTRACT ADMINISTRATION

Services of CONTRACTOR shall be under the general direction of the **Chief Operations Officer**, or designee, who shall act as the AUTHORITY'S representative during the term of the Agreement.

ARTICLE 30 - KEY PERSONNEL

CONTRACTOR shall notify AUTHORITY in the event of key personnel changes which might affect this Agreement. Notification shall be made within ten (10) days of said changes. AUTHORITY has the right to reject any proposed changes in key personnel. The following personnel shall be considered key personnel:

Tommy Webster – Contract Manager, Operations/Project Manager
Cell No.: 828-644-3222 E-Mail: twebster@pandj.com

Morgan Pierce – Mission Executive
Cell No.: 919-740-3250 E-Mail: mpierce@pandj.com

Eric Hedrick – Mission/Operations Manager
Cell No.: 813-714-9471 E-Mail: ehedrick@pandj.com

Matthew Mooneyham– Client/Project Manager
Cell No.: 850-530-7151 E-Mail: matthew.mooneyham@phillipsih.com

Heath Stone – Operations/Project Manager
Cell No.: 865-392-3057 E-Mail: hstone@phillipsih.com

ARTICLE 31 – EQUAL BUSINESS OPPORTUNITY PROGRAM:

The Governing Board of the AUTHORITY has implemented the Economic Inclusion Policy administered by the Equal Business Opportunity (EBO) Program Office to ensure that all segments of its business population, including, but not limited to local, small, minority, and women-owned businesses, have an equitable opportunity to participate in the AUTHORITY'S procurement process, in accordance with Section 6.1 through 6.4 of the Purchasing Manual. Program tools and solicitation incentives are hereby referred to as the Affirmative Procurement Initiatives (API).

31.1 **Affirmative Procurement Initiative (API):**

The AUTHORITY has NOT applied an Affirmative Procurement Initiative to this Agreement.

ARTICLE 32 - SCRUTINIZED COMPANIES

32.1 As provided in F.S. 287.135, by entering into this Agreement or performing any work in furtherance hereof, the CONTRACTOR certifies that it, its affiliates, suppliers, subcontractors and consultants who will perform hereunder, have not been placed on the Scrutinized Companies With Activities in Sudan List or Scrutinized Companies With Activities in The Iran Petroleum Energy Sector List created pursuant to F.S. 215.473, or is engaged in business operations in Cuba or Syria.

If the AUTHORITY determines, using credible information available to the public, that a false certification has been submitted by CONTRACTOR, this Agreement may be terminated and a civil penalty equal to the greater of $2 million or twice the amount of this Agreement shall be imposed, pursuant to F.S. 287.135. Said certification must also be submitted at the time of renewal of this Agreement.

32.2 As provided in F.S. 287.135, by entering into this Agreement or performing any work in furtherance hereof, this Agreement certifies that it, its affiliates, suppliers, subcontractors, and consultants who will perform hereunder, have not been placed on the Scrutinized Companies that Boycott Israel List, or is engaged in a boycott of Israel, pursuant to F.S. 215.4725.

If the AUTHORITY determines, using credible information available to the public, that a false certification has been submitted by CONTRACTOR, this may be terminated and a civil penalty equal to the greater of $2 million or twice the amount of this shall be imposed, pursuant to F.S. 287.135. Said certification must also be submitted at the time of renewal of this Agreement.

ARTICLE 33 - AGREEMENTS WITH OTHER GOVERNMENTAL ENTITIES

33.1 The CONTRACTOR agrees that this Agreement constitutes an offer to all State and local government agencies of the State of Florida under the same terms and conditions, for the same prices and for the same effective period as specified in this Agreement should the CONTRACTOR deem it in the best interest of their business to do so.

33.2 The Agreement in no way restricts or interferes with any State or local government agencies of the State of Florida from re-solicitation.

ARTICLE 34 – THIRD PARTY BENEFICIARY DISCLAIMER

It is not the intention of these documents to create third party beneficiary status in any person or entity that is not a direct party to this Agreement, and no language in this Agreement should be construed or interpreted as creating a third party beneficiary.

ARTICLE 35 – E-VERIFY – EMPLOYMENT ELIGIBILITY

35.1 The CONTRACTOR certifies, warrants and represents that it is in compliance with Section 448.095, Florida Statutes, as may be amended and that CONTRACTOR shall: (1) register with and use the E-Verify System (E-Verify.gov) to electronically verify the employment eligibility of all newly hired workers; and (2) has verified that all of the CONTRACTOR'S subcontractors performing the duties and obligations of this Agreement are registered with and use the E-Verify System to electronically verify the employment eligibility of all newly hired workers. CONTRACTOR shall obtain from each of its subcontractors an affidavit stating that the subcontractor does not employ, contract with, or subcontract with an Unauthorized Alien, as that term is defined in Section 448.095(1)(k), Florida Statutes, as may be amended. CONTRACTOR shall maintain a copy of any such affidavit from a subcontractor for, at a minimum, the duration of the subcontract and any extension thereof. This provision shall not supersede any provision of this Agreement which requires a longer retention period.

35.2 AUTHORITY shall terminate this Agreement if it has a good faith belief that CONTRACTOR has knowingly violated Section 448.09(1), Florida Statutes, as may be amended. If AUTHORITY has a good faith belief that one of CONTRACTOR'S subcontractor(s) has knowingly violated Section 448.09(1), Florida Statutes, as may be amended, AUTHORITY shall notify CONTRACTOR to terminate its contract with the subcontractor and CONTRACTOR shall immediately terminate its contract with the subcontractor. If AUTHORITY terminates this Agreement pursuant to the above, CONTRACTOR shall be barred from being awarded a future contract by AUTHORITY for a period of one (1) year from the date on which the Agreement was terminated. In the event of such contract termination, CONTRACTOR shall also be liable for any additional costs incurred by AUTHORITY as a result of the termination.

ARTICLE 36 – CONFIDENTIALITY

No reports, information, computer programs, documentation, and/or data given to, or prepared or assembled by the CONTRACTOR under this Agreement shall be made available to any individual or organization by the CONTRACTOR without prior written approval of the AUTHORITY.

ARTICLE 37 – PAYMENT ADJUSTMENT SCHEDULE

37.1 The AUTHORITY acknowledges the fluctuating nature of prices.

37.2 Annual Non-Fuel: The Non-Fuel Adjustment shall be applied to those rates subject to adjustment and as provided within this Agreement. For the purpose of this Agreement, the Non-Fuel component is assumed to represent 90% of the CONTRACTOR's costs. Therefore, 90% of the approved rates shall be so adjusted:

The rates shall be adjusted as follows:

The rates shall be adjusted annually, commencing on the first anniversary date, by the change in the Water and Sewer and Trash Collection Services Index, Series ID CUSR0000SEHG, as published by the United States Department of Labor, Bureau of Labor Statistics (www.bls.gov). The change in the index shall be calculated by dividing the average of the index over the twelve-month period ending the December preceding the effective date of the adjustment (January – December 2022) by the average of the index over the twelve-month period from January 2021 through December 2021. The first Annual Non-Fuel adjustment shall be effective May 7, 2023 to May 6, 2024.

For example:

For the Contract year beginning May 7, 2023, the average of the index over the twelve-month period from January 2022 through December 2022 shall be divided by the average of the index over the twelve-month period from January 2021 through December 2021, multiplying the result by ninety (90) percent of the contract or AUTHORITY established price, and subtracting ninety (90) percent of the contract or AUTHORITY established price.

The surcharge/credit shall be rounded to the nearest cent.

Formula:

Most Recent Year Average / Prior Year Average x .90 x Rate – (.90 x Rate) = Annual Adjustment

Calendar:

Annual Payment Adjustment Calendar

April 2023	April 2024

Extension Clause Annual Payment Adjustment Schedule

April 2025	April 2026	April 2027

37.3 **Activation Fuel Adjustment (Fuel Surcharge/Credit)**

The rates subject to adjustment shall be subject to a fuel price surcharge/credit for fluctuations in the price of fuel. For the purpose of this Agreement, fuel is assumed to represent 10% of the Contractor's costs therefore 10% of the approved rates shall be so adjusted. Fuel adjustment shall be calculated and effective upon activation.

The rates shall be adjusted as follows:

For the rates subject to adjustment, a fuel surcharge/credit shall be charged/credited basis based on the percentage change in the average price of fuel as published by the Oil Price Information Service (OPIS) and measured by the OPIS Standard Rack, OPIS No. 2 Distillate Gross Prices, Unbranded Average for Miami, Florida between the month of **January 2022 (Base)** and the most recent month available upon activation.

Fuel Adjustment does not use a floor or ceiling and provides adjustments in either direction without limit.

The surcharge/credit shall be rounded to the nearest cent.

Formula:

Most recent OPIS (at activation) / Base x .10 x Rate – (.10 x Rate) = Fuel Adjustment (for duration of activation)

For example:

Should activation occur October 2023, the fuel surcharge/credit shall be calculated by dividing the reported unbranded average price for September 2023 by the Base (unbranded average price for January 2022), multiplying the result by ten (10) percent of the contract or Authority established price, and subtracting ten (10) percent of the contract or Authority established price.

37.4 In the event that either of these indices is no longer available, the parties shall mutually agree to a replacement index. The value of the adjustment will be determined by the AUTHORITY.

ARTICLE 38 – ORDER OF AGREEMENT ACTIVATION/LOCATION ASSIGNMENT

The CONTRACTOR has entered into a contingent Agreement with the AUTHORITY for Hurricane/Disaster Debris Removal, Reduction, and Disposal. The Agreement awarded will be activated on an as-needed basis as solely determined by the AUTHORITY. The AUTHORITY may activate, assign/reassign any or all CONTRACTORS at any time as may be deemed appropriate depending upon the circumstance(s), the event, or any other condition which may warrant such action as it determines in its sole and unfettered discretion.

ARTICLE 39 – TASK ORDER/PERFORMANCE

Task Orders shall be executed bilaterally, and the scope of services and format of Task Orders shall be mutually agreed to by the CONTRACTOR and AUTHORITY. Performance will be measured by the metrics established in each Task Order. After 1/3 and again after 2/3 of the stipulated number of days of work in the Task Order have elapsed, the CONTRACTOR(S) shall provide a written progress report to the AUTHORITY for review and acceptance. The AUTHORITY shall have the right to correct for CONTRACTOR default or underperformance by any means it deems in its best interest. CONTRACTOR will be required to provide a daily report of quantity of work performed under each Task Order. The daily report shall be submitted by 11:00 a.m. or earlier the following morning.

ARTICLE 40 – BONDS

CONTRACTOR shall maintain a Proposal Bond in the sum of $500,000. The CONTRACTOR's Proposal Bond will be

returned to the CONTRACTOR in exchange for and acceptance of an appropriate size bond as determined by the AUTHORITY after assessment of damage and definition of the CONTRACTOR's scope of service. In case of hurricane caused damage, a Category 1 storm would require a $2,000,000 Bond, a Category II would require a $4,000,000 Bond, a Category III would require a $6,000,000 Bond, a Category IV would require an $8,000,000 Bond, and a Category V would require a $10,000,000 Bond. The Bond required would be a Performance and Payment Bond, Attachment G. The cost of the Bond is included in the unit rates in the Fee Schedule, Exhibit B. The CONTRACTOR shall maintain the Proposal Bond in effect until the Performance and Payment Bond is submitted to and accepted by the AUTHORITY. If the CONTRACTOR fails to supply a Performance and Payment Bond, the AUTHORITY shall be entitled to retain the Proposal Bond to rectify the CONTRACTOR's unacceptable performance. Pending successful annual CONTRACTOR recertification, the Proposal Bond shall be in effect for the entire term of the Agreement, except for period(s) of time when a Performance and Payment Bond is in effect.

ARTICLE 41 – FLORIDA HIGHWAY ADMINISTRATION (FHWA) FORM 1273

41.1 This Agreement incorporates all of the provisions set forth in the document commonly known as FHWA Form 1273, Attachment E, which is attached hereto and incorporated by reference as part of this Agreement. The term "contractor" as used in Attachment E shall apply to and mean the CONTRACTOR who may be referred to in Attachment E as the "prime contractor", "bidder", "proposer", "prospective primary participant", "prospective participant", "participant" or the like. The CONTRACTOR will perform the duties and obligations of the other contracting party regardless of the description or label used in Form 1273, Attachment E.

41.2 The CONTRACTOR shall comply with the Davis-Bacon wages rates to the extent applicable to the work performed under this Agreement. The provisions of the Davis-Bacon Act do not apply to debris removal work unless such work is done in conjunction with a construction project or "linked" to a particular Federal Highway. Wage rate tables may be found at http://www.dot.state.fl.us/construction/wage.shtm. Said wage rate tables are incorporated into and made part of this Agreement by reference.

ARTICLE 42 – BUY AMERICA REQUIREMENTS

The CONTRACTOR agrees to comply with the requirements of the Federal Buy America law (See 23 U.S.C. 313, ISTEA Sections 1041(a) and 1048(a), as they may be amended from time to time) as they relate to Federal-aid contracts and the use of steel and iron produced in the United States. A description of the requirements of Buy America is set forth in Attachment F, which is attached hereto and incorporated by reference as part of this Agreement. CONTRACTOR shall provide a certification statement regarding the origin of all materials or products covered under the Buy America provisions and used in its performance of the Agreement in accordance with the requirements of law and the AUTHORITY, FDOT, and FEMA, to the extent applicable.

ARTICLE 43 – DISADVANTAGED BUSINESS ENTERPRISES

43.1 This provision shall supplement Article 31 "Equal Business Opportunity Program" of the Agreement. The Agreement is subject to the requirements of 49 CFR Part 26. The CONTRACTOR shall not discriminate on the basis of race, color, national origin, or sex in the performance of the Agreement. The CONTRACTOR shall carry out the applicable requirements of 49 CFR Part 26 in the award and administration of this U.S. DOT-assisted contract. Failure by the CONTRACTOR to carry out these requirements is a material breach of Agreement, which may result in the termination of this Agreement or such other remedy as the AUTHORITY deems appropriate, including but not limited to the withholding of payments. Each subcontract the CONTRACTOR signs with a subcontractor must include the assurance in this paragraph. (See 49 CFR 26.13). Upon request, the CONTRACTOR will provide the AUTHORITY with a copy of each subcontract it enters into.

43.2 The CONTRACTOR is required to pay its subcontractors performing work related to this Agreement for satisfactory performance of that work no later than thirty (30) days after the CONTRACTOR's receipt of

payment for that work from the AUTHORITY. The CONTRACTOR may not hold any retainage from its subcontractors unless pursuant to an agreement approved by the AUTHORITY. The CONTRACTOR shall return all retainage payments withheld within thirty (30) days after the subcontractor's work has been satisfactorily completed.

43.3 The CONTRACTOR shall, on a monthly basis, submit payment certifications, including a certification regarding their truth and accuracy, for all payments it is seeking and certifications from all subcontractors indicating who has been paid and how. The certifications shall comply with all Federal and State requirements regarding the reporting of DBE participation. The CONTRACTOR shall, if required by the AUTHORITY or FDOT, report its DBE participation monthly on the Equal Opportunity Reporting System located on the Florida Department of Transportation's (FDOT) website found at www.bipincwebapps.com/bizwebflorida/. Audits may be conducted to review payments to DBE subcontractors. The CONTRACTOR will fully cooperate with the AUTHORITY, FDOT, or FEMA regarding the monitoring of subcontractors and payments made thereto.

ARTICLE 44 – CERTIFICATION REGARDING SUSPENSION AND DEBARMENT

44.1 This Agreement is a covered transaction for purposes of 49 CFR Part 29. Accordingly, the CONTRACTOR shall verify that neither the CONTRACTOR, nor its principals, as defined at 49 CFR 29.995, or affiliates, as defined at 49 CFR 29.905, are excluded or disqualified from participation in this Agreement as defined at 49 CFR 29.940 and 29.945.

44.2 The CONTRACTOR agrees to comply with the requirements of 49 CFR 29, Subpart C throughout the term of this Agreement. The CONTRACTOR must include the requirement to comply with 49 CFR 29, Subpart C in any lower tier covered transaction it enters into. CONTRACTOR's certification is a material representation of fact relied upon by the AUTHORITY. If it is later determined that the CONTRACTOR knowingly rendered an erroneous certification, in addition to remedies available to the AUTHORITY, the State or Federal government may pursue any available remedies, including but not limited to suspension and/or debarment. The CONTRACTOR further agrees that it will include a provision requiring such compliance in all of its subcontracts or lower tier covered transactions.

ARTICLE 45 – ACCESS TO RECORDS AND THEIR RETENTION

45.1 This provision shall supplement Article 26 of this Agreement. The CONTRACTOR shall maintain adequate records to justify all charges, expenses, and costs incurred in estimating and performing the Agreement for at least five (5) years after completion or termination of this Agreement or FDOT's closure of an "emergency event" with the Florida Division of Emergency Management, whichever comes last, except in the event of litigation or settlement of claims arising from the performance of the Agreement, the CONTRACTOR agrees to maintain said records until all litigation, claims, appeals or exceptions related thereto have been resolved. The records shall be maintained at a location in Palm Beach County, Florida or such other location in Florida approved by the AUTHORITY.

45.2 The CONTRACTOR shall make all of its books, records, and other documents related, in any manner to its or its subcontractors' performance of the Agreement, available to the AUTHORITY and any other funding entity (e.g. FDOT, FEMA, the Comptroller General of the U.S. or any of their authorized representatives) for the purpose of examination, audit, reproduction, excerpts and transcripts, during normal business hours, at the CONTRACTOR's place of business or if CONTRACTOR's place of business is not located in Palm Beach County, then at the location for maintenance of records referenced above. The CONTRACTOR shall also require its subcontractors to make their books, records and documents available for examination, audit, reproduction, excerpts, and transcripts, for the same duration and in the same manner, and at or near the same locations required herein of CONTRACTOR.

ARTICLE 46 – AUDIT REQUIREMENTS

This provision shall supplement Article 26 of this Agreement. The CONTRACTOR agrees that audits may be undertaken of its records related to its performance of the Agreement as may be authorized or required under OMB Circular A-133, as revised. The CONTRACTOR agrees that it will comply, execute any necessary documents and fully cooperate with the AUTHORITY and any State and/or Federal funding agency(ies), including but not limited to FDOT, Florida's Auditor General, FEMA, or any of their authorized representatives, in any audit or monitoring procedures or processes any such entity(ies) may undertake related to CONTRACTOR's performance of the Agreement in order to properly and satisfactorily complete the audit, if any.

ARTICLE 47 – NATIONAL ENVIRONMENTAL POLICY ACT (NEPA)

The CONTRACTOR shall cooperate with the AUTHORITY, FDOT, and FEMA so as to assure that all activities related to the performance of this Agreement comply with the requirements of the National NEPA of 1969, as amended, and the regulations and guidance related thereto.

ARTICLE 48 – AMERICANS WITH DISABILITIES ACT

The CONTRACTOR does hereby represent and certify that it will comply with all the requirements of the Americans with Disabilities Act of 1990 (42 USC 12102, et seq.), as it may be amended, and all applicable impending regulations of the U.S. DOT, FEMA, and other Federal-aid agencies.

ARTICLE 49 – COMPLIANCE WITH TITLE VI, TITLE VII, AND OTHER FEDERAL LAWS AND REGULATIONS

The CONTRACTOR does hereby represent and certify that it will comply with all the requirements imposed by Title VI of the Civil Rights Act of 1964 and Title VII of the Civil Rights Act of 1968, as they have been and may be modified from time to time (42 USC 2000d et. Seq. and 3601 et seq.) and the Age Discrimination and Employment Act of 1967 and Section 303 of the Age Discrimination Act of 1975, as amended (42 USC 6102), and all applicable Federal laws and regulations, policies, procedures, and directives of the U.S.DOT, FEMA and/or other Federal-aid agencies, as they may be promulgated and amended from time to time.

ARTICLE 50 – CONVICT LABOR PROHIBITION

The CONTRACTOR does hereby represent and certify that it will comply with the convict labor prohibition in 23 U.S.C. 114, and all implementing regulations thereto.

ARTICLE 51 – CERTIFICATION REGARDING LOBBYING ACTIVITIES

A Bidder or Proposer for an award of certain Federal-Aid contracts in the amount of $100,000 or more, must file the certification required by 49 CFR Part 2. The CONTRACTOR confirms that by signing and submitting a Bid or Proposal for the work covered by this Agreement, it made the certification described in Section X1 of the Attachment F herein.

ARTICLE 52 – DEPARTMENT OF HOMELAND SECURITY (DHS) SEAL, LOGO, AND FLAGS

The CONTRACTOR shall not use the DHS seal(s), logos, crests, or reproductions of flags or likenesses of DHS agency officials without specific FEMA pre-approval.

ARTICLE 53 – NO OBLIGATION BY FEDERAL GOVERNMENT

The Federal Government is not a party to this Agreement and is not subject to any obligations or liabilities to the AUTHORITY, CONTRACTOR, or any other party pertaining to any matter resulting from this Agreement.

ARTICLE 54 – PROGRAM FRAUD AND FALSE OR FRAUDULENT STATEMENTS OR RELATED ACTS

The CONTRACTOR acknowledges that 31 U.S.C Chapter 38 (Administrative Remedies for False Claims and Statements) applies to the CONTRACTOR's actions pertaining to this Agreement.

REMAINDER OF PAGE LEFT BLANK INTENTIONALLY

In Witness Whereof, AUTHORITY, and CONTRACTOR have made and executed this Agreement all as of the day and year first above written.

SOLID WASTE AUTHORITY OF PALM BEACH COUNTY:

WITNESS:

1. _____

2. _____

By: _____
Daniel Pellowitz
Executive Director

(SEAL)

APPROVED AS TO LEGAL SUFFICIENCY:

By: Howard J. Falcon III
Digitally signed by Howard J. Falcon III
DN: DC=org, DC=pbcgov, OU=Enterprise, OU=CATT, OU=Users, CN=Howard J. Falcon III, E=hfalcon@pbcgov.org
Reason: I am the author of this document
Location: your signing location here
Date: 2022.05.03 14:22:32-04'00'
Foxit PDF Reader Version: 11.2.1

Howard J. Falcon, III
General Counsel

APPROVED AS TO TERMS AND CONDITIONS:

_____
Signature

Patrick D. Carroll
Print Name

COO
Title

ATTEST:

Jason Garner
Corporate Secretary

WITNESS:

1. Paul Lenski

2. Tommy Webster

PHILLIPS AND JORDAN, INC.:

Morgan Pierce
Authorized Signature

Morgan Pierce
Print Name

President, Power
Title

4/18/2022
Date

(Affix Corporate Seal)

PHILLIPS AND JORDAN INCORPORATED
CORPORATE SEAL
NORTH CAROLINA

Approved by Authority Board on April 13, 2022, Item No.: 9. C.1

EXHIBIT "A"

SCOPE OF WORK

1. PROJECT DESCRIPTION AND REQUIREMENTS:

A. The AUTHORITY seeks COINTRACTOR to remove and lawfully dispose of disaster-generated debris (other than hazardous materials and household putrescible garbage) from public property and public rights-of-way, and to setup and operate Temporary Debris Management Site(s) (TDMS) in Palm Beach County, Florida, immediately after a hurricane or other disaster.

B. The objective of this RFP and subsequent contracting activity is to secure the services of an experienced CONTRACTOR who is capable of efficiently removing large volumes of disaster-generated debris from a large area in a safe, timely and cost-effective manner and lawfully disposing of all debris. CONTRACTOR must be capable of assembling, directing, and managing a work force that can complete the debris management operations in 120 days or less. The duration of effort/completion dates of all tasks will be determined jointly by the AUTHORITY and CONTRACTOR. This determination will be set in writing in appropriate Task Order(s).

C. The CONTRACTOR shall perform all work in strict accordance with Federal Emergency Management Agency (FEMA) guidelines in order to maximize recovery of reimbursable expenses. This task shall include the provision of audit quality documentation as required by and acceptable to FEMA for all work accomplished.

D. The CONTRACTOR may be required, at the AUTHORITY'S discretion, to be under the direction of an agent of the AUTHORITY.

E. While intended to cover debris management needs in any major disaster scenario, the primary focus is on the threat of hurricane damage to Palm Beach County, Florida. The planning standards used for this project are based on the anticipated impacts of a named storm event or major flood impacting Palm Beach County, Florida. The AUTHORITY intends to enter into contingency Agreement(s) as further defined herein, to provide emergency debris removal and disposal services as required by the AUTHORITY.

2. INTRODUCTION:

A. The AUTHORITY'S disaster recovery planning includes considerations for removing and processing the volumes and types of debris expected to be generated by a major disaster such as a hurricane or major flood and includes procedures for disposing of that debris. The planning approach is formulated in part on the concept of strategic pre-positioning of plans and resources necessary for timely, safe, coordinated recovery operations, including removal of debris from public property and rights-of-way throughout Palm Beach County using a combination of county, municipal, and CONTRACTOR forces.

B. If activation is required, the AUTHORITY intends to activate contracts on an as-needed basis as solely determined by the AUTHORITY. The AUTHORITY intends to activate the CONTRACTORS in the order of final ranking as best meets the needs of the AUTHORITY. The AUTHORITY reserves the right in its sole and unfettered discretion, to assign/reassign any or all CONTRACTORS at any time as may be deemed appropriate depending upon the

circumstance(s), the event, or any other condition which may warrant such action.

C. The AUTHORITY envisions the need for four (4) CONTRACTORS to carry out the debris removal and disposal work throughout Palm Beach County. The CONTRACTOR must have the experience and capability to manage a major workforce with multiple subcontractors and to cover the expenses associated with a major recovery operation prior to the initial AUTHORITY payment and between subsequent payments, as well as the capacity to provide the necessary bonds and insurance. The CONTRACTOR must also have an established management team, an established network of resources to provide the necessary equipment and personnel, comprehensive debris removal, volume reduction operations plan, and demonstrable experience in major disaster recovery projects.

D. The Agreement(s) to be awarded under this RFP will be contingency Agreement(s) that will be activated only in the face of an emergency. As such, no compensation will accrue to the CONTRACTOR unless and until the Agreement is activated either in anticipation of a natural disaster or immediately after such disaster.

E. The CONTRACTOR who receives an Agreement for the work, will be required to participate in certain AUTHORITY directed disaster recovery training and/or exercises, 1 to 2 days each year, at no cost to the AUTHORITY.

F. The AUTHORITY does not guarantee a CONTRACTOR will be activated if awarded an Agreement.

3. PLANNING STANDARD FOR DEBRIS REMOVAL AND DISPOSAL:

The AUTHORITY'S goal is to complete the debris removal and disposal process in 120 days following the storm event. This assumes that the entire area of the county will be accessible within that period. Due to the low elevation and potential for flooding, some areas might not be accessible for several weeks after a major natural disaster. The CONTRACTOR must be aware that it might not be possible to initiate operations in all parts of the county simultaneously immediately after a storm.

4. DEBRIS MANAGEMENT:

A. Planning for debris management operations is a function of the AUTHORITY as a supporting agency to the Palm Beach County Department of Engineering and Public Works. The AUTHORITY'S Emergency Management Coordinator will direct the debris removal and disposal operations.

B. In addition to using AUTHORITY forces and equipment, the AUTHORITY intends to execute four (4) debris removal and disposal Agreements on a contingency basis for the purpose of having CONTRACTOR(S) immediately available and committed to assisting the AUTHORITY in the aftermath of a major disaster. Each CONTRACTOR holding a debris removal and disposal Agreement will serve as a General CONTRACTOR for the purpose of debris removal and disposal operations and will be able to use his/her own and subcontractor resources to meet the obligations of the Agreement. It is anticipated, but not required, that the CONTRACTOR will use both local and non-local subcontractors.

C. When a major disaster occurs or is imminent, the AUTHORITY intends to contact the highest two (2) or three (3) ranked CONTRACTORS holding debris removal and disposal Agreements to advise them of the AUTHORITY'S intent to activate the Agreement(s). Debris removal will generally be limited to debris in, upon, or brought to county residential private and public streets and roads, rights-of-way, municipal properties and facilities, and other public sites (this includes debris from customers assessed for residential solid waste and recycling collection services by the AUTHORITY). The CONTRACTOR will be responsible for determining the method and manner of debris removal and lawful disposal operations. Disposal of debris will be at AUTHORITY approved TDMS or landfill sites. The CONTRACTOR will be responsible for the lawful disposal of all debris and debris-reduction by-products generated at all TDMS.

D. When a major disaster occurs or is imminent, the AUTHORITY will initially send out an Alert to the selected CONTRACTOR(S). This Alert will serve to activate the lines of communication between the CONTRACTOR representatives and the AUTHORITY. Subsequently, the AUTHORITY will issue the first Task Order which will authorize the CONTRACTOR to send an Operations Manager to the AUTHORITY within 24 hours of receiving such Task Order, to begin planning for the operations and mobilizing the personnel and equipment as necessary to perform the stipulated work. This first Task Order will also direct the CONTRACTOR to execute the required Performance and Payment Bond. The CONTRACTOR should anticipate receiving this first Task Order 24 to 72 hours before projected landfall of a hurricane or major flood. Depending on the nature of the storm and circumstances, the AUTHORITY may activate more than one (1) CONTRACTOR. CONTRACTOR(S) will generally be activated in order of final ranking.

E. Specific task orders will be issued to select CONTRACTORS based on the best interest of Palm Beach County. The AUTHORITY reserves the right to assign work or task orders to various CONTRACTORS based on capability. The AUTHORITY does not guarantee a cradle to grave pricing arrangement but reserves the right to pick and choose CONTRACTORS based on ranking.

F. The general concept of debris removal operations includes multiple, scheduled passes of each site, location, or right-of-way. This will allow residents to return to their properties and bring debris to the private and public right-of-way as recovery progresses. The AUTHORITY will prescribe the specific schedule to be used after ascertaining the scope and nature of the disaster's impacts.

G. The AUTHORITY will make every effort to identify strategically located public and private TDMS throughout the county prior to a natural disaster. Depending upon the severity of the natural disaster, additional public and private TDMS will be identified as needed.

H. The CONTRACTOR will operate the public and private TDMS and only CONTRACTOR vehicles and others specifically authorized by the AUTHORITY will be allowed to use the sites. Only one (1) level of subcontractor will be allowed to operate the sites. There will be no multi-tiered subcontractors (sub of a sub) allowed to operate TDMS. The CONTRACTOR is responsible for all activity at TDMS operated by their subcontractor and must have an employee on site at all times to oversee daily operations. **The locations of both publicly and privately owned sites currently under consideration are shown on Attachment B.** Additional public and privately owned TDMS may become available as plans develop. The availability of both private and public TDMS may change during the term of the Agreement.

DocuSign Envelope ID: BAA9924A-B365-44D4-95BB-4AAB9E87ACFD

I. The AUTHORITY may also establish designated homeowner drop-off sites on a public right-a-way (PROW) for communities. The CONTRACTOR will be responsible for removing all eligible debris from those approved designated locations at the direction of the Emergency Management Coordinator or designee.

J. Curbside segregation of debris and disaster-generated or related wastes will be an element of the AUTHORITY'S disaster recovery program. The debris removal and disposal CONTRACTOR will be required to aid in the segregation and waste stream management processes. Any Household Hazardous Waste (HHW) encountered by the debris removal CONTRACTOR is to be set aside. HHW disposal will be the responsibility of the resident. The AUTHORITY will designate HHW drop-off locations.

K. The following items are considered HHW for the purpose of this Agreement:

1. Used Oil
2. Batteries
3. Paint
4. Aerosol spray cans
5. Pesticides
6. Antifreeze
7. Fluorescent light bulbs
8. Propane tanks (household size)

L. The CONTRACTOR will setup a lined containment area and separate any HHW inadvertently delivered to a TDMS.

M. Commercial and industrial hazardous waste such as chemicals, gas containers, transformers, and any other form of hazardous or toxic matter will be set aside for collection and disposal by a Hazardous Materials Removal and Disposal Contractor who will be selected by the AUTHORITY.

N. Putrescible residential garbage will be collected by AUTHORITY franchise waste haulers and is not to be collected or transported by CONTRACTOR forces. The AUTHORITY may enter into a separate emergency debris removal agreements with each franchise hauler to operate their dedicated self-loading collection equipment within their Service Area for FEMA eligible storm debris removal.

5. SCOPE OF WORK/OVERVIEW:

This section is divided into three (3) subsections:

5.1 **Debris Removal and Disposal Operations** from residential public and private streets, roads and rights-of-way and delivered to a TDMS designated by the Authority.

5.2 **TDMS Operations** which includes daily operations as well as reclamation of the site to its pre-storm condition or as directed by the AUTHORITY Emergency Management Coordinator

5.3 **Processing, Loading and Hauling Material** from TDMS to final destination.

DocuSign Envelope ID: BAA9924A-B365-44D4-95BB-4AAB9E87ACFD

A. Specific work authorizations by the AUTHORITY will be through written Task Orders. Task Orders will define the job to be accomplished, location of job, timeframe for completion, rates to be used, etc. Any job with requirements or rates not covered by this Proposal will be negotiated. The AUTHORITY reserves the right to extend operations on a weekly basis. Task Orders will be executed bilaterally. Performance will be by the metrics established in the Task Order(s). After 1/3 and again after 2/3 of the stipulated number of days of work in the Task Order have elapsed, the CONTRACTOR(S) shall provide written progress report to the AUTHORITY for review and acceptance. The AUTHORITY shall have the right to correct for CONTRACTOR'S default or underperformance by any means it deems in its best interest at the CONTRACTOR'S expense.

B. The CONTRACTOR shall commence mobilization immediately upon receipt of the mobilization Task Order meeting the following progress patterns: 48 hours- collection activity within assigned Collection Service Area. Within ten (10) calendar days CONTRACTOR shall have 100% of all necessary equipment operating within all Collection Service Areas. This represents a minimum response schedule and does not restrict an earlier response. Subsequently, the AUTHORITY may issue additional Task Orders to define more precisely the work to be accomplished or to authorize additional work. The CONTRACTOR shall perform in accordance with each Task Order in all designated Collection Service Areas established by the AUTHORITY. Each Task Order will be uniquely and sequentially numbered.

C. The CONTRACTOR is authorized to collect debris during daylight hours, seven (7) days per week. Any deviations from this schedule will require AUTHORITY approval.

D. The CONTRACTOR must be duly licensed to perform the work in accordance with the State of Florida statutory requirements. The CONTRACTOR shall obtain all permits necessary to complete the work. The CONTRACTOR shall be responsible for determining what permits are necessary to perform under the Agreement. Copies of all permits shall be submitted to the AUTHORITY's Director, Customer Information Services prior to issuance of the first Task Order.

E. The quantity of work required to complete the Agreement resulted from this RFP is estimated. The actual effort required may be more or less than the estimated amount shown in the Proposal Form 3 – Price Proposal. Payment will be made at the unit rates proposed. The output will be verified by the AUTHORITY's Director, Customer Services in the daily operational report. Should hourly rates be used to pay for certain equipment other than preventative maintenance, not in excess of fifteen (15) minutes in a normal workday, will be paid at the regular hourly rate. Preventative maintenance or down time resulting from equipment failure, routine maintenance and fueling that exceeds fifteen (15) minutes will be considered unacceptable work and non-payment of that time will be rounded off to the half hour of all hours where delays occur. Preventative maintenance is defined as the usual field maintenance to keep equipment in operating condition without the use of extensive shop equipment. Fueling of equipment will be considered as part of preventative maintenance.

DocuSign Envelope ID: BAA9924A-B365-44D4-95BB-4AAB9E87ACFD

F. The CONTRACTOR shall be responsible for correcting any notices of violations issued as a result of the CONTRACTOR'S or any subcontractor's actions or operations during the performance of this Agreement. Corrections for any such violations shall be at no additional cost to the AUTHORITY.

G. The CONTRACTOR shall conduct the work so as not to interfere with the disaster response and recovery activities of federal, state or local governments or agencies, or of any public utilities or other private contractor.

H. The CONTRACTOR shall provide contact information for all key personnel to the AUTHORITY that shall include name, phone number, cellular phone number and email address. The CONTRACTOR and its agents shall respond in a timely manner to all AUTHORITY inquiries at all times.

6. DEBRIS REMOVAL AND DISPOSAL OPERATIONS

6.1 General:

A. The purpose of this section is to define the requirements for debris removal and disposal operations after any catastrophic disaster within Palm Beach County. The AUTHORITY may designate zones for collection and disposal locations for debris collected. CONTRACTORS will be tasked with a service area(s) for this specific work immediately after the activation of the Agreement.

B. For work performed on a Time and Materials basis, all hourly equipment rates shall include the cost of the maintenance, fuel, repairs, overhead, profit, insurance, and all other costs associated with the equipment including labor and operator.

6.2 Services:

A. The CONTRACTOR shall provide equipment, operators, and laborers for debris removal operations. The CONTRACTOR shall provide all labor and materials necessary to fully operate and maintain (including fuel, oil, grease, and repairs) all equipment under this Agreement.

B. All rates are to include the cost of protective clothing (to include hardhats and steel-toed boots), fringe benefits, hand tools, supervision, transportation, lodging, meals, and all other costs.

C. The work shall consist of clearing and removing disaster generated debris as directed by the AUTHORITY Emergency Management Coordinator. CONTRACTOR shall provide collection equipment the day following a natural disaster or as directed by the AUTHORITY and shall provide equipment sufficient to collect a minimum of 50,000 cubic yards of debris per day within ten (10) calendar days of collection commencement (Past AUTHORITY natural disaster cleanup records show that ten (10) days' following disaster, 95,000-126,000 cubic yards of debris collected per day). Failure to provide sufficient equipment necessary to collect required amount may result in the AUTHORITY entering into a separate agreement with another contractor for collection services.

DocuSign Envelope ID: BAA9924A-B365-44D4-95BB-4AAB9E87ACFD

6.2.1 Removal of Hazardous Leaning Trees and Hanging Limbs

a) Under this contract, work shall consist of all labor, equipment, fuel, and miscellaneous costs necessary to remove all hazardous trees twelve inches (12") or greater in diameter, measured three feet (3') from the base of the tree or chest height and hanging limbs two inches (2") or greater in diameter existing in private and public right-of-way. Further, debris generated from the removal of hazardous trees and hanging limbs two inches (2") or greater existing in private and public right-of-way will be placed at the public right-of-way for removal as vegetative debris. Hazardous leaning trees less than twelve inches (12") in diameter, measured three feet (3') from the base of the tree or at chest height, will be flush cut, and placed on the public right-of-way to be removed as vegetative debris. The AUTHORITY will not compensate the CONTRACTOR for leaning trees less than twelve inches (12") in diameter on a unit rate basis.

b) Removal and transportation of hazardous trees twelve inches (12") or greater in diameter and hanging limbs two inches (2") or greater in diameter existing in private and public right-of-way will be performed as identified by the AUTHORITY. All disaster specific eligibility guidelines regarding size and diameter of leaning trees will be communicated to the CONTRACTOR, in writing, by the AUTHORITY. In order for leaning or hazardous trees to be removed and eligible for reimbursement, the tree must satisfy a minimum of one (1) of the following requirements:

   i) The tree is leaning in excess of 30° degrees in a direction that poses an immediate threat to public health, welfare, and safety.
   ii) The tree is dead, twisted, or mangled as a direct result of the storm and a certified arborist can attest to the fact that the tree will die and potentially create a falling hazard to the public.

6.2.2 Removal of Hazardous Stumps

a) Under this contract, work shall consist of all labor, equipment, fuel, and miscellaneous costs necessary to remove all hazardous uprooted stumps 24 inches or greater in diameter, measured 24 inches from the base of the tree existing in private and public right-of-way. Further, debris generated from the removal of uprooted stumps existing in private and public right-of-way will be placed at the public right-of-way for removal as vegetative debris. Stumps measured 24 inches from the base of the tree and less than 24 inches in diameter will be considered normal vegetative debris and removed in accordance with 3.1.2. The AUTHORITY will not compensate hazardous stumps less than 24 inches in diameter on a unit rate basis and instead will be considered normal vegetative debris. The diameter of stumps less than 24 inches will be converted into a cubic yardage volume based on the published FEMA stump conversion table (In accordance with current FEMA public assistance guidelines) and removed under the terms and conditions of 2.6.2.

b) Removal and transportation of hazardous uprooted stumps existing in the

DocuSign Envelope ID: BAA9924A-B365-44D4-95BB-4AAB9E87ACFD

private and public right-of-way and private property will be performed as identified by the AUTHORITY. All disaster specific eligibility guidelines regarding size and diameter of hazardous stumps will be communicated to the CONTRACTOR, in writing, by the AUTHORITY. In order for hazardous stumps to be removed and eligible for reimbursement, the stump must satisfy the following requirement:

(i) Over 50% of the tree crown is damaged or broken and heartwood is exposed.
(ii) Tree stumps that are not attached to the ground will be considered normal vegetative debris and subject to removal under the terms and conditions of 2.1. The cubic yard volume of the unattached stump will be based off of the diameter conversion using the published FEMA stump conversion table (In accordance with current FEMA public assistance guidelines).

The AUTHORITY or its representative will measure and certify all stumps before removal.

6.2.3 Collection of Storm Generated Residential Vegetation and Construction and Demolition Debris:

a) It is the AUTHORITY'S goal to ensure that Vegetation and Construction/Demolition debris remain separate task orders for the collection of Vegetation and Construction loads. Mixing of loads by the CONTRACTOR at the road right of way will not be tolerated.

Work may include:

(i) First pass to clear debris from emergency evacuation routes, access roads to critical facilities and all primary roadways.
(ii) Clearing debris from residential private and public road right of ways.
(iii) Loading the debris.
(iv) Hauling the debris to an approved AUTHORITY TDMS or an authorized private construction demolition debris recycling facility or landfill.
(v) Dumping the debris at the TDMS or direct haul to an Authority permitted approved private Construction and Demolition Debris (C&D) recycling facility or Authority authorized landfill.

b) Debris delivered to a TDMS, private C&D recycling facility or authorized landfill will be paid based on the per cubic yard price according to the Proposal Form 3 – Price Proposal.

6.2.4 Hourly Rate Clearing:

a) From 0-70 hours following a disaster CONTRACTOR, as designated by the AUTHORITY, shall provide the clearing services on an hourly rate that shall include the following:

(i) Clear debris from emergency evacuation routes, access roads to critical facilities, and primary roadways.

DocuSign Envelope ID: BAA9924A-B365-44D4-95BB-4AAB9E87ACFD

(ii) Perform emergency removal of debris if needed for life-saving measures.
(iii) Conduct daily briefings with debris managers and other officials to update progress and discuss issues.
(iv) Develop a traffic control plan along potential haul routes and at debris management and disposal sites.

b) The CONTRACTOR shall not move from one designated Collection Zone to another area without prior approval from the AUTHORITY's Director, Customer Information Services or designee. CONTRACTORS and/or subcontractors that move to a designated Collection Service Area without prior AUTHORITY approval may be terminated immediately. The AUTHORITY reserves the right to relocate CONTRACTOR to other Collection Service Areas based on need and ability to perform required work at an acceptable level. The AUTHORITY reserves the right to immediately terminate CONTRACTOR and any subcontractor who fails to provide service in strict accordance with guidelines set forth by FEMA and the AUTHORITY.

c) The AUTHORITY or designee shall forward all claims of damage to the CONTRACTOR daily. CONTRACTOR shall provide all contact information, including name, phone number, cellular phone number, fax number and email address, for personnel responsible for resolving all claims of damage. CONTRACTOR must respond to all claims of damage within 24 hours and resolve within ten (10) calendar days. Mailboxes must be repaired or replaced within two (2) calendar days. CONTRACTOR is responsible for all damage caused by his crew and/or subcontractors in the performance of debris removal.

d) In the event the CONTRACTOR fails to repair damages as a result of the Contractor's equipment failure or negligence within the time provided in this Agreement, the AUTHORITY or designee may arrange for the repairs and assess the CONTRACTOR for the cost of the repairs and any applicable administrative charges. Any disputes as to damage responsibility will be presented to the Director, Customer Information Services or designee for review. The decision of the Director, Customer Information Services or designee will be final.

6.3 Equipment:

A. All trucks and equipment must be in compliance with all applicable federal, state, and local rules and regulations. Trucks used to haul debris must be capable of rapidly dumping their load without the assistance of other equipment, be equipped with a tailgate that will effectively contain the debris during transport that will permit the trucks to be filled to capacity. Cyclone fence may be used as temporary tailgates if they comply with the following specifications:

1. Fencing must be permanently attached to one side of the truck bed.
2. After loading, the fencing must be tied to the other side of the truck bed at two places with heavy gauge wire.
3. Fencing must extend to the bottom of the bed.

DocuSign Envelope ID: BAA9924A-B365-44D4-95BB-4AAB9E87ACFD

4. After loading, bottom of fencing shall be tight against the bed of the truck and secured at a minimum of two locations.
5. Solid iron metal bars must be secured to both sides of the fencing.
6. There shall be no hand loaded equipment allowed.

B. The AUTHORITY or designee shall complete certifications indicating the type of vehicle, make and model, license plate number, equipment number, and measured maximum volume, in cubic yards, of the load bed of each piece of equipment utilized to haul debris. The measured volume of each piece of equipment shall be calculated from actual internal physical measurement performed and certified by the CONTRACTOR. Maximum volumes may be rounded up to the nearest cubic yard. The reported measured maximum volume of any load bed shall be the same as shown on the placards affixed to each piece of equipment. The AUTHORITY reserves the right to re-measure trucks and trailers at any time to verify reported capacity. If a truck and/or trailer are re-measured and the yardage capacity is determined to be lower, the lower yardage volume will be retroactive to the initial load and total volume adjusted accordingly.

C. All trucks and trailers utilized in hauling debris shall be equipped with a tailgate that will permit the vehicle to be loaded to capacity and effectively contain the debris on the vehicle while hauling. If installed, all sideboard extensions must remain in place throughout the operation, or the vehicle must be re-measured and remarked. All extensions to the bed are subject to acceptance or rejection at the sole discretion of the AUTHORITY or designee.

D. Trucks or equipment designated for use under this Agreement shall not be used for any other work during working hours. The CONTRACTOR shall not solicit work from private citizens or others to be performed in the designated Collection Service Area during the period of this Agreement. Under no circumstance will the CONTRACTOR mix debris hauled for others with debris hauled under this Agreement. Failure to comply will result in no payment to CONTRACTOR and the operator and vehicle will be declared ineligible to provide any additional emergency debris collection services. Any and all unapproved changes to placard will result in no payment to CONTRACTOR and the operator and vehicle will be declared ineligible to perform any additional emergency debris collection services.

6.4 Securing Debris

The CONTRACTOR shall be responsible for properly and adequately securing debris on each piece of equipment utilized to haul debris. Prior to leaving the loading site, the CONTRACTOR shall ensure that each load is secure and trimmed so that no debris extends horizontally beyond the bed of the equipment in any direction. All loose debris shall be reasonably compacted during loading and secured during transport. Tarps or other coverings shall be provided by the CONTRACTOR to prevent materials from falling or being blown from the bed. Loads not properly tarped or otherwise covered will not be allowed to dispose at any AUTHORITY approved TDMS which may result in non-payment to CONTRACTOR.

DocuSign Envelope ID: BAA9924A-B365-44D4-95BB-4AAB9E87ACFD

6.5 Equipment Signage

Prior to commencing operations, the AUTHORITY or designee shall affix to each piece of equipment, signs or markings indicating the Owner Operator's name and a unique equipment identification number. One sign shall be placed on each side of the equipment. For those trucks, trailers and other equipment intended to haul debris, the maximum volume, in cubic yards, of the load bed shall also be shown. Each operator shall keep AUTHORITY certification with them at all times. Placards must remain on both sides of equipment.

6.6 Other Considerations

A. The CONTRACTOR shall assign and provide an Operations Manager (OM) to the AUTHORITY TDMS to serve as the principal liaison between the AUTHORITY Director, Customer Services or designee and the CONTRACTOR'S forces. The assigned OM must be knowledgeable of all facets of the CONTRACTOR'S operations and have authority in writing to commit the CONTRACTOR. The OM shall be on call 24 hours per day, seven (7) days per week and shall have electronic linkage capability for transmitting and receiving relevant contractual information and make arrangements for onsite accommodations. This linkage shall provide immediate contact via cell phone, Fax machine, and have Internet capabilities. The OM will participate in daily meetings and disaster exercises, functioning as a source to provide essential element information. The OM will report to the AUTHORITY Director, Customer Services or designee. This position will not require constant presence; rather the OM will be required to be physically capable of responding to the AUTHORITY Emergency Management Coordinator within 30 minutes of notification.

B. The CONTRACTOR shall be responsible for control of pedestrian and vehicular traffic in the work area. At a minimum, one flag person should be posted at each approach to the work area.

C. The CONTRACTOR shall supervise and direct the work, using skilled labor and proper equipment for all tasks. Safety of the CONTRACTOR'S personnel and equipment is the responsibility of the CONTRACTOR. Additionally, the CONTRACTOR shall pay for all materials, personnel, taxes, and fees necessary to perform under the terms of this contract.

D. Payment for debris hauled will be based on the quantity of debris hauled in cubic yards. Debris hauled to a TDMS will require a validated load ticket. Drivers will be given an electronic load tickets at the loading site by an AUTHORITY loading site monitor. The quantity of debris hauled will be estimated in cubic yards at the TDMS by an AUTHORITY TDMS monitor. The estimated quantity will be recorded on the electronic load ticket. The AUTHORITY TDMS monitor will retain one copy of the paper load ticket and the driver will retain the remaining copies of the load ticket. Debris being hauled to a permanent landfill will be paid based on cubic yards recorded on an approved electronic or paper load ticket. Payment will be made against the CONTRACTOR'S invoice once site monitor and CONTRACTOR load tickets and/or scale tickets match. Load tickets not properly completed and signed will not be paid.

7. TEMPORARY DEBRIS MANAGEMENT SITES (TDMS) OPERATIONS

7.1 General

A. The purpose of this section is to define the requirements for TDMS Operations after any catastrophic disaster within Palm Beach County.

B. The CONTRACTOR shall use only TDMS designated by the AUTHORITY Emergency Management Coordinator.

C. The TDMS foreman shall direct all vehicular traffic and load drop-off operations. Different types of debris shall be kept in separate piles at the TDMS. At a minimum, one flag person shall be posted at each TDMS for traffic control and to direct unmixed loads to proper location (by debris type) to be offloaded. CONTRACTOR shall be responsible for sorting and proper placement of all loads not dumped in appropriate location which results in mixing the once separated debris at no charge to the AUTHORITY.

D. The CONTRACTOR shall begin grinding vegetative debris within five (5) calendar days of TDMS opening date and removing mulch/wood chips within ten (10) calendar days of site opening date. It is very important your plan provides specific information for the final disposal destination location of the mulch / wood chips removed from the public or private TDMS. The CONTRACTOR shall begin removal of Construction and Demolition/mixed debris from TDMS to an approved final destination within five (5) days of site opening date.

7.2 TDMS Services

7.2.1 Site Setup/Preparation and Site Closeout/Restoration Site setup/preparation and site closeout/restoration shall be compensated on a time and materials basis in accordance with the hourly rates provided in the Proposal Form 3 – Price Proposal Site set-up/preparation/closeout/restoration includes: clearing, stripping, hauling, fill placement, constructing/deconstructing processing pads, limerock or crushed concrete access roads, seeding, and any other similar activity necessary to make the site usable for its intended purposes and to return the site to its original condition. Do not include any materials in calculating the hourly rates in the Proposal Form 3 - Price Proposal. Important- Phase I TDMS Reclamation is included in the 2.0 cubic yard price. Phase I Reclamation requires the contractor to remove all debris from the TDMS including small particles mixed with soil and grading the entire area. The only site closeout cost will be removal of road base material and seeding as approved by the Authority.

7.2.2 TDMS Operations and Material Processing

a. TDMS operations and material processing shall be compensated in accordance with the unit prices provided in the Proposal Form 3 - Price Proposal. The CONTRACTOR shall provide equipment, operators, and laborers for TDMS operations as specified by Task Order. Unit prices provided in the Proposal Form 3 - Price Proposal, shall include all labor and materials necessary to fully operate and maintain (including fuel, oil, grease, repairs, operator, mobilization, demobilization, overhead, profit, lodging and insurance)

DocuSign Envelope ID: BAA9924A-B365-44D4-95BB-4AAB9E87ACFD

all equipment under this Agreement. Each Inspection Tower shall be equipped with two (2) portable toilets. Toilets shall be provided immediately upon completion of tower assembly. CONTRACTOR shall provide a water truck for the purpose of applying to site surface to minimize dust. The AUTHORITY shall provide a front-load garbage container and collection service of the container at each TDMS. CONTRACTOR shall be responsible for cleaning up all trash and litter generated on the site from daily operations and depositing into the container for collection. The entrance roadway and surrounding area within ½ mile of the site's entrance shall be cleaned daily by the CONTRACTOR. All pre-storm identified sites shall be opened by the CONTRACTOR within three (3) calendar days after receiving approval from the AUTHORITY to operate the TDMS. Failure to open sites with proper equipment and necessary personnel will result in liquidated damages of $10,000 per day. All rates shall include the cost of protective clothing (to include hardhats and steel-toed boots), fringe benefits, hand tools, supervision, transportation, lodging, meals, and any other costs. The work shall consist of managing the operations of a TDMS and performing debris reduction by air curtain incineration and/or grinding of storm generated debris as directed by the AUTHORITY Emergency Management Coordinator

b. The AUTHORITY plans to use two types of TDMS.

   1. Vegetative TDMS will be devoted to the reduction of clean woody debris by either burning or grinding. The AUTHORITY expects the material to be recycled and or beneficially re-used if processed by grinding. It is important to provide a detailed plan on how this material will be recycled or beneficially reused after grinding / reduction.

   2. Depending upon the size and type of devastation the AUTHORITY may require a separate Construction & Demolition (C&D) staging area, mixed debris staging area and a separate Household Hazardous Waste staging area. The AUTHORITY requests that PROPOSER implements recycling and or reduction programs to minimize the quantity of construction debris material to be land filled.

c. Material coming into the Vegetative or C&D TDMS will be measured and paid for by the cubic yard according to the Proposal Form 3 – Price Proposal. Material removed and transported from a C&D TDMS will be measured and paid by the cubic yard according to the Proposal Form 3 – Price Proposal.

d. Locations of all TDMS will be approved by the AUTHORITY. The AUTHORITY Emergency Management Coordinator must approve site improvements before work begins and any costs, other than those in the Proposal Form 3 – Price Proposal, that might have been negotiated under a Task Order shall be documented for payment.

e. Material processed at a TDMS by either grinding or burning will be measured using cubic yards from incoming load tickets. Material entering a TDMS will be

DocuSign Envelope ID: BAA9924A-B365-44D4-95BB-4AAB9E87ACFD

deposited in manageable piles.

7.3 Reporting

The CONTRACTOR shall submit a report to the AUTHORITY Emergency Management Coordinator or designee by close of business each day of the term of the Task Order. Each report shall contain, at a minimum, the following information:

1. Contractor's Name
2. Contract Number
3. Daily and cumulative hours for each piece of equipment, *if appropriate*
4. Daily and cumulative hours for personnel, by position, *if appropriate*
5. Volumes of debris handled

Failure to provide audit quality information by 5:00 p.m. of the following day of operation will subject CONTRACTOR to non-payment in each instance at the sole discretion of the AUTHORITY.

7.4 Other Considerations

A. The CONTRACTOR shall supervise and direct the work, using skilled labor and proper equipment for all tasks. Safety of the Contractor's personnel and equipment is the responsibility of the CONTRACTOR. Additionally, the CONTRACTOR shall pay for all materials, personnel, taxes, and fees necessary to perform under the terms of this contract.

B. The CONTRACTOR shall be responsible for control of pedestrian and vehicular traffic in the work area. In the event a TDMS must be closed due to CONTRACTOR equipment or operational failures, CONTRACTOR shall be liable for liquidated damages in the amount of $25,000.00 per day for every day the site has to remain closed.

7.5 Debris Clearance (for access) from Right-of-Ways and Public Property

A. The AUTHORITY provides support to Palm Beach County Government for Debris Management, including the clearance (moving debris from the middle of the road, etc.) of debris from right-of- ways and public property. Palm Beach County intends to perform debris clearance for access with its own forces or under existing contractual Agreements between the County and local firms. However, in a significant disaster, these resources may be insufficient to perform the clearance activities in a timely manner.

B. This debris clearance is to be considered supplemental and optional service. It is anticipated that debris clearance activities would be conducted, if needed, on a time and material basis using the rates in the Proposal Form 3 – Price Proposal.

DocuSign Envelope ID: BAA9924A-B365-44D4-95BB-4AAB9E87ACFD

8. PROCESSING, LOADING AND HAULING MATERIAL:

CONTRACTOR shall provide all necessary labor, material and equipment to process, load and haul wood chips from TDMS in Palm Beach County to final destination for disposal. CONTRACTOR shall provide all necessary labor, material and equipment to load and haul construction and demolition debris and/or mixed debris from TDMS as directed by the AUTHORITY. The AUTHORITY reserves the right to contract with other firms to process, load and haul wood chips and construction and/or mixed debris to a final destination as may best meet the needs of the AUTHORITY. All wood chips, construction and/or mixed debris shall be disposed of in accordance with all Local, State of Florida and Federal guidelines.
CONTRACTOR will provide detailed listing to the AUTHORITY of the following:

1. Quantity (loads and cubic yards)
2. Owner information
3. Site where mulch / reduced yard waste material generated at TDMS is disposed, to include address/GPS location.
4. AUTHORITY will determine final private or public Construction/Demolition debris disposal/recycling facility.

9. MISCELLANEOUS REQUIREMENTS

9.1 TDMS Foreman

A. The TDMS foreman must be an employee of the CONTRACTOR and is responsible for management of all operations of the site to include, traffic control, dumping operations, segregation of debris, burning, grinding, and safety.

B. The TDMS foreman will be responsible for monitoring and documenting equipment and labor time and providing the daily operational report to the AUTHORITY Director, Customer Services or designee.

9.2 TDMS Night Foreman

A. The TDMS night foreman must be an employee of the CONTRACTOR and is responsible for managing all night operations approved by the AUTHORITY.

B. The TDMS night foreman will be responsible for monitoring and documenting equipment and labor time and providing the daily operational report to the AUTHORITY Director, Customer Information Services or designee.

9.3 TDMS Management Plan

A. Once the TDMS is identified by the AUTHORITY, the CONTRACTOR will provide a Site Management Plan.

B. Three (3) copies of the plan are required. The plan shall be drawn to a scale of 1" = 50' and address the following functions:

1. Access to site
2. Site preparation -clearing, erosion control, and grading
3. Traffic control procedures

4. Safety
5. Segregation of debris
6. Location of ash disposal area, hazardous material containment area, CONTRACTOR work area, and inspection tower
7. Location of incineration operations, grinding operation (if required). Burning operations require a 100-foot clearance from the stockpile and a 1000-foot clearance from structures.
8. Specific plan including and location for the final disposal destination of the mulch/wood chips generated at the public or private TDMS.

9.4 Inspection Tower

The CONTRACTOR shall construct an inspection tower at each TDMS within three (3) calendar days of natural disaster. The tower shall be constructed using pressure treated wood or steel scaffold. The floor elevation of the tower shall be 10-feet above the existing ground elevation. The floor area shall be a minimum 8' by 8', constructed of 2"x 8" joists, 16" O.C. with 3/4" plywood supported by a minimum of four 6" x 6" posts. A 4-foot high wall constructed of 2" x 4" studs and ½" plywood shall protect the perimeter of the floor area. The floor area shall be covered with a roof. The roof shall provide a minimum of 6'-6" of headroom below the support beams. Steps with a handrail shall provide access to the tower. Inspection towers must provide a dry area for employees and meet all FEMA and OSHA requirements.

9.5 Grinding Operation

The CONTRACTOR shall have grinder(s) on site and in operation within five (5) calendar days following a natural disaster. Failure to provide sufficient grinding capacity to accommodate expected incoming volumes and allow site to operate in an efficient manner within five (5) calendar days shall result in liquidated damages of $10,000 per day. There shall be no period longer than 24 hours in which grinding activity may stop due to equipment or operational failure. Failure to provide back-up equipment within 24 hours shall result in liquidated damages of $2,000 per hour per approved hours of grinding operation per day until grinding activity resumes.

9.6 Household Hazardous Waste Containment Area

The CONTRACTOR shall construct a hazardous material containment area at each TDMS. The area shall be 30' x 30'. The perimeter shall be lined with hay bales and staked in place. The area shall be lined with a heavy gage plastic to provide a waterproof barrier. Additional plastic sufficient to cover the area is required to prevent rain from entering the containment area. Site run-off must be redirected from the containment area by site grading.

10. PERFORMANCE OF CONTRACTOR

A. It is the intent of this Agreement to ensure that the CONTRACTOR provides a timely quality level of services. To this end, all complaints received by the Emergency Management Coordinator or designee and reported to the CONTRACTOR shall be promptly resolved pursuant to the provisions of this Agreement.

DocuSign Envelope ID: BAA9924A-B365-44D4-95BB-4AAB9E87ACFD

B. The Emergency Management Coordinator or designee may levy administrative charges for the following infractions:

1. Failure to open pre-storm identified sites within three (3) calendar days of after being tasked by the AUTHORITY liquidated damages of $10,000 per day for each day not opened.
2. Closure of TDMS due to CONTRACTOR equipment or operational failures liquidated damages of $25,000 per day, for each day site must remain closed.

C. Failure to provide back-up grinder(s) within 24 hours of equipment breakdown liquidated damages of $2,000 per hour per approved grinding hours of operation per day.

D. CONTRACTOR may also be subject to non-payment and liquidated damages of $200 for each occurrence of the following infractions:

1. Failure to provide audit quality information by 5:00 p.m. of the following day of operation.
2. Loads not properly tarped or otherwise covered.
3. Mixing debris hauled from other sources with debris hauled under this Agreement.
4. Mixing vegetation debris with C & D material.

E. CONTRACTOR may be immediately terminated and not paid for the following:

1. Collection of any non-eligible, non-AUTHORITY approved stumps or debris.
2. Moving to another designated Collection Service Area without prior AUTHORITY approval.
3. Failure to provide service in accordance with guidelines set forth by FEMA and the AUTHORITY.
4. Soliciting work from private citizens or others to be performed in the designated Collection Service Area during the period of this Agreement.
5. Alteration of placards placed on certified trucks and/or trailers.

Any disputes regarding Performance of Contractor will be presented to the Emergency Management Coordinator or designee for review. The Emergency Management Coordinator or designee shall complete review and make determination within three (3) calendar days. Decisions of the Emergency Management Coordinator or designee shall be final.

EXHIBIT "B"

FEE SCHEDULE

PROPOSAL FORM 3 – PRICE PROPOSAL

PART A – VOLUME BASED PRICING FOR 3,000,000 CUBIC YARD (CY) DEBRIS DISASTER

ITEM/DESCRIPTION	ESTIMATED QUANTITY	UNIT	PRICE PER CY	EXTENSION
1.0 Public Property and Right of Way Collection, Loading and Hauling to a designated TDMS.				
A. Vegetation	2,500,000	CY	9.90	24,750,000
B. Construction Debris / Mixed Debris	500,000	CY	9.90	4,950,000
2.0 TDMS operation to include placement of monitoring towers, portable toilets, keeping on-site and adjacent roads area clean of trash and garbage, debris acceptance, pile management, and Phase I Reclamation.	3,000,000	CY	2.35	7,050,000
3.0 Processing of debris through grinding and/or chipping.	2,500,000	CY	2.70	6,750,000
4.0 Loading, hauling and disposing wood chips to final destination. ***(This rate includes disposal cost)***	1,000,000	CY	9.60	9,600,000
5.0 Volume reduction through air curtain incineration.	2,500,000	CY	2.40	
6.0 Loading and hauling of construction debris and/or mixed debris from TDMS to a permitted C&D recycling facility or any other designated Disposal Facility. ***(This rate shall not include disposal cost). Based on miles from TDMS to final destination– 1 way.***				
A. 0 ≤ 20 miles	500,000	CY	4.80	
B. > 20 ≤ 50 miles	500,000	CY	6.60	
C. > 50 ≤ 100 miles	500,000	CY	8.70	
AVERAGE: (Item 6.0 A-C)			6.70	
AVERAGE: (Item 6.0 A-C) **X 500,000** CY =				$ 3,350,000
TOTAL PROPOSAL PRICE: (Items 1.0 - 4.0; 6.0)				$ 56,450,000

PROPOSER MUST PROVIDE PRICE FOR ALL LINE ITEMS 1 THRU 6. FAILURE TO DO SO MAY RENDER YOUR PROPOSAL TO BE DEEMED NON-RESPONSIVE.

Unit Prices, unless otherwise indicated, shall include all labor (operators, laborers, supervisors) and materials including but not limited to: supplies, equipment maintenance, repairs, repair parts, fuels, lubricants, cellular phones, transportation, and housing, if required, necessary to accomplish the project. The quantities and distributions are estimated for the purpose of making an award. Locations of sites, debris quantities, destinations, material densities, etc. may differ substantially in an actual disaster.

Assumptions: 3,000,000 cubic yards of debris consisting of 2,500,000 cubic yards of vegetation debris and 500,000 cubic yards of mixed debris.

DocuSign Envelope ID: BAA9924A-B365-44D4-95BB-4AAB9E87ACFD

PROPOSAL FORM 3 – PRICE PROPOSAL

PART B – HOURLY RATES

TDMS SET-UP AND CLOSURE AND DEBRIS CLEARANCE FOR ACCESS - OPTIONAL USE BY COUNTY AND OTHER GOVERNMENTAL ENTITIES			
EQUIPMENT AND LABOR RATES			
EQUIPMENT TYPE	HOURLY EQUIPMENT RATE	HOURLY LABOR RATE	TOTAL HOURLY RATE
Bobcat Loader	46.31	50.21	96.52
Crew Foreman w/ Cell Phone and Pickup	13.19	63.60	76.79
Dozer, Tracked, D5 or similar	54.45	50.21	104.66
Dozer, Tracked, D6 or similar	81.39	50.21	131.60
Dozer, Tracked, D7 or similar	115.88	50.21	166.09
Dozer, Tracked, D8 or similar	145.56	50.21	195.77
Dump Truck, 18 CY-20 CY	54.88	41.84	96.72
Dump Truck, 21CY-30 CY	62.92	41.84	104.76
Generator and Lighting	11.69	N/A	11.69
Grader w/ 12' Blade	85.50	50.21	135.71
Hydraulic Excavator, 1.5 CY	67.61	50.21	117.82
Hydraulic Excavator, 2.5 CY	98.13	50.21	148.34
Knuckleboom Loader	175.25	50.21	225.46
Laborer w/ Chain Saw	4.25	42.17	46.42
Laborer w/ small tools, traffic control, flag person	11.50	33.48	44.98
Lowboy Trailer w/ Tractor	85.44	41.84	127.28
Operations Manager w/ Cell Phone and Pickup	13.19	108.80	121.99
Pickup Truck, .5 Ton	13.19	N/A	13.19
Soil Compactor 81 HP+	60.19	50.21	110.40
Soil Compactor to 80 HP	53.00	50.21	103.21
Soil Compactor, Towed Unit	51.88	50.21	102.09
Truck, Flatbed	32.59	41.84	74.43
Tub Grinder, 800 to 1,000 HP	523.57	50.21	573.78
Water Truck	67.13	41.84	108.97
Wheel Loader, 2.5 CY, 950 or similar	71.45	50.21	121.66
Wheel Loader, 3.5-4.0 CY, 966 or similar	136.88	50.21	187.09
Wheel Loader, 4.5 CY, 980 or similar	149.00	50.21	190.21
Wheel Loader-Backhoe, 1.0-1.5 CY	55.13	50.21	105.34
Other – Please List			

Attach additional sheet with equipment type and labor rates, if needed

DocuSign Envelope ID: BAA9924A-B365-44D4-95BB-4AAB9E87ACFD

PROPOSAL FORM 3 – PRICE PROPOSAL

PART C – UNIT COST SCHEDULE

ITEM	HAZARDOUS STUMP REMOVAL, HAULING, AND DISPOSAL	UNIT	UNIT COST
1.	24-inch diameter to 48.99-inch diameter	Stump	450.00
2.	49-inch diameter and greater	Stump	675.00
3.	Stump Fill Dirt – Fill dirt for stump holes after removal	CY	25.00
	HAZARDOUS HANGING LIMBS (HANGERS), AND HAULING To include removal of all hanging limbs. Limbs to be cut and placed on the right of way for collection as vegetative debris.		
4.	2-inch diameter and greater	Tree	110.00
	HAZARDOUS TREE REMOVAL, AND HAULING Trees to be flush cut at ground level and placed on the right of way for removal as vegetative debris.		
5.	6-inch diameter to 12.99-inch diameter	Tree	100.00
6.	13-inch diameter to 24.99-inch diameter	Tree	200.00
7.	25-inch diameter to 48.99-inch diameter	Tree	375.00
8.	49-inch diameter and greater	Tree	525.00

NOTE:
The following is information only and will NOT be considered in the evaluation of this RFP

The AUTHORITY reserves the right to use this contract to handle small quantities of debris removal and as support for our Franchise Contracts as needed. Below is a daily rate to remove debris. The AUTHORITY will pay for the disposal cost. There is no requirement to provide a rate, however if you do, we expect your company to honor this special service and respond within 48 hours at the rate below.

COLLECTION SERVICE ONLY	
EQUIPMENT	DAILY RATE (10 HRS/DAY)
Knuckleboom Loader and Operator	$2,750.00

DocuSign Envelope ID: BAA9924A-B365-44D4-95BB-4AAB9E87ACFD

ATTACHMENT "A"

SOLID WASTE AUTHORITY
OF PALM BEACH COUNTY

7501 North Jog Road
West Palm Beach, Florida 33412
Telephone: 561-640-4000 • Fax: 561-640-3400

TASK ORDER
DISASTER DEBRIS MANAGEMENT

TO_____
Task Order No.

In accordance with _____(Contractor) contract, with the Solid Waste Authority of PBC, Florida, (AUTHORITY) Agreement No._____ for Hurricane/Disaster Debris Removal, Reduction, and Disposal dated _____ the AUTHORITY hereby requests and authorizes the services to be performed on the project as described below:

Project: _____

Specific Work to be performed: _____

_____

_____

_____

_____

_____

Duration of Work (Include Start Date, End Date and Total Calendar Days): _____

_____

_____

_____

Method of Payment: _____

_____

_____

Estimated Cost of this Task Order: $_____

Contractor Signature: _____ Date: _____

AUTHORITY Signature: _____ Date: _____

SWA Use Only					
SWA Requestor/Monitor:	_____			Date:	_____
SWA Dept. Director:	_____			Date:	_____
Vendor No.:	_____	Account No.:	_____	Project:	_____
Purchasing:	_____	Budget:	_____	Accounting:	_____

ATTACHMENT "B"

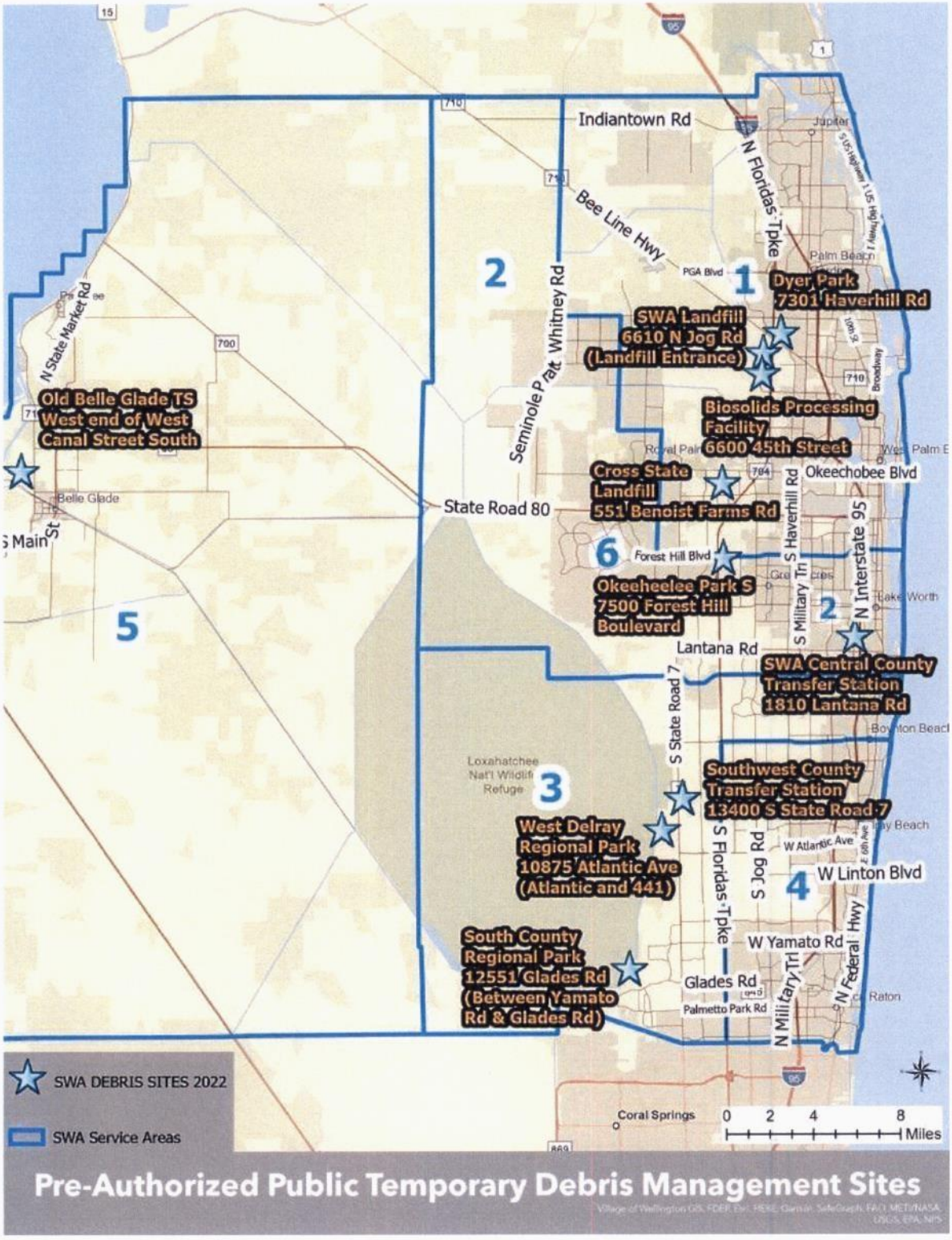

ATTACHMENT "C"

PUBLIC ASSISTANCE PROGRAM AND POLICY GUIDE

The Public Assistance Program and Policy Guide, Version 4, Effective June 1, 2020 (see hyperlink below) is the most recent reference material that will provide additional information:
https://www.fema.gov/sites/default/files/documents/fema_pappg-v4-updated-links_policy_6-1-2020.pdf

PROJECT MANAGEMENT

Project management begins when a disaster occurs and does not end until an applicant has received final payment for the project. Good project management ensures successful recovery from the disaster, expedited payment of funds, and more efficient close-outs of PA Program grants.

Record Keeping

It is critical that the applicant establish and maintain accurate records of events and expenditures related to disaster recovery work. The information required for documentation describes the "who, what, when, where, why, and how much" for each item of disaster recovery work. The applicant should have a financial and record keeping system in place that can be used to track these elements. The importance of maintaining a complete and accurate set of records for each project cannot be over-emphasized. Good documentation facilitates the project formulation, validation, approval, and funding processes.

All of the documentation pertaining to a project should be filed with the corresponding *PW* and maintained by the applicant as the permanent record of the project. These records become the basis for verification of the accuracy of project cost estimates during validation of small projects, reconciliation of costs for large projects, and audits.

Applicants should begin the record keeping process before a disaster is declared by the President. To ensure that work performed both before and after a disaster declaration is well documented, potential applicants should:

- designate a person to coordinate the compilation and filing of records;
- establish a file for each site where work has been or will be performed; and
- maintain accurate disbursement and accounting records to document the work performed and the costs incurred.

The Federal Office of Management and Budget requires grant recipients to maintain financial and program records on file for three years following final payment. Records of grant recipients may be subject to the provisions of the Single Audit Act, as described on page 117 of this guide. Applicants may refer to the Applicant Handbook, FEMA 323, for additional information regarding record-keeping.

DocuSign Envelope ID: BAA9924A-B365-44D4-95BB-4AAB9E87ACFD

ATTACHMENT "D"

MOBILIZATION SCHEDULE

CONTRACTOR shall commence mobilization of equipment, operators, and laborers immediately upon receipt of a Mobilization Task Order to meet the progress pattern set below.

	Category 1 & 2	Category 3	Category 4	Category 5
Within 24 hours	25%	25%	20%	15%
Within 48 hours	30%	30%	30%	25%
Within 72 hours	40%	40%	40%	40%
Within 96 hours	60%	60%	50%	50%
Within 5 days	100%	80%	60%	60%
Within 10 days		100%	80%	70%
Within 14 days			100%	80%
Within 20 days				100%

DocuSign Envelope ID: BAA9924A-B365-44D4-95BB-4AAB9E87ACFD

ATTACHMENT "E"

FHWA-1273

FHWA-1273 – Revised May 1, 2012

REQUIRED CONTRACT PROVISIONS
FEDERAL-AID CONSTRUCTION CONTRACTS

I. General
II. Nondiscrimination
III. Nonsegregated Facilities
IV. Davis-Bacon and Related Act Provisions
V. Contract Work Hours and Safety Standards Act Provisions
VI. Subletting or Assigning the Contract
VII. Safety: Accident Prevention
VIII. False Statements Concerning Highway Projects
IX. Implementation of Clean Air Act and Federal Water Pollution Control Act
X. Compliance with Governmentwide Suspension and Debarment Requirements
XI. Certification Regarding Use of Contract Funds for Lobbying

ATTACHMENTS

A. Employment and Materials Preference for Appalachian Development Highway System or Appalachian Local Access Road Contracts (included in Appalachian contracts only)

I. GENERAL

1. Form FHWA-1273 must be physically incorporated in each construction contract funded under Title 23 (excluding emergency contracts solely intended for debris removal). The contractor (or subcontractor) must insert this form in each subcontract and further require its inclusion in all lower tier subcontracts (excluding purchase orders, rental agreements and other agreements for supplies or services).

The applicable requirements of Form FHWA-1273 are incorporated by reference for work done under any purchase order, rental agreement or agreement for other services. The prime contractor shall be responsible for compliance by any subcontractor, lower-tier subcontractor or service provider.

Form FHWA-1273 must be included in all Federal-aid design-build contracts, in all subcontracts and in lower tier subcontracts (excluding subcontracts for design services, purchase orders, rental agreements and other agreements for supplies or services). The design-builder shall be responsible for compliance by any subcontractor, lower-tier subcontractor or service provider.

Contracting agencies may reference Form FHWA-1273 in bid proposal or request for proposal documents, however, the Form FHWA-1273 must be physically incorporated (not referenced) in all contracts, subcontracts and lower-tier subcontracts (excluding purchase orders, rental agreements and other agreements for supplies or services related to a construction contract).

2. Subject to the applicability criteria noted in the following sections, these contract provisions shall apply to all work performed on the contract by the contractor's own organization and with the assistance of workers under the contractor's immediate superintendence and to all work performed on the contract by piecework, station work, or by subcontract.

3. A breach of any of the stipulations contained in these Required Contract Provisions may be sufficient grounds for withholding of progress payments, withholding of final payment, termination of the contract, suspension / debarment or any other action determined to be appropriate by the contracting agency and FHWA.

4. Selection of Labor: During the performance of this contract, the contractor shall not use convict labor for any purpose within the limits of a construction project on a Federal-aid highway unless it is labor performed by convicts who are on parole, supervised release, or probation. The term Federal-aid highway does not include roadways functionally classified as local roads or rural minor collectors.

II. NONDISCRIMINATION

The provisions of this section related to 23 CFR Part 230 are applicable to all Federal-aid construction contracts and to all related construction subcontracts of $10,000 or more. The provisions of 23 CFR Part 230 are not applicable to material supply, engineering, or architectural service contracts.

In addition, the contractor and all subcontractors must comply with the following policies: Executive Order 11246, 41 CFR 60, 29 CFR 1625-1627, Title 23 USC Section 140, the Rehabilitation Act of 1973, as amended (29 USC 794), Title VI of the Civil Rights Act of 1964, as amended, and related regulations including 49 CFR Parts 21, 26 and 27; and 23 CFR Parts 200, 230, and 633.

The contractor and all subcontractors must comply with: the requirements of the Equal Opportunity Clause in 41 CFR 60-1.4(b) and, for all construction contracts exceeding $10,000, the Standard Federal Equal Employment Opportunity Construction Contract Specifications in 41 CFR 60-4.3.

Note: The U.S. Department of Labor has exclusive authority to determine compliance with Executive Order 11246 and the policies of the Secretary of Labor including 41 CFR 60, and 29 CFR 1625-1627. The contracting agency and the FHWA have the authority and the responsibility to ensure compliance with Title 23 USC Section 140, the Rehabilitation Act of 1973, as amended (29 USC 794), and Title VI of the Civil Rights Act of 1964, as amended, and related regulations including 49 CFR Parts 21, 26 and 27; and 23 CFR Parts 200, 230, and 633.

The following provision is adopted from 23 CFR 230, Appendix A, with appropriate revisions to conform to the U.S. Department of Labor (US DOL) and FHWA requirements.

1. Equal Employment Opportunity: Equal employment opportunity (EEO) requirements not to discriminate and to take affirmative action to assure equal opportunity as set forth under laws, executive orders, rules, regulations (28 CFR 35, 29 CFR 1630, 29 CFR 1625-1627, 41 CFR 60 and 49 CFR 27) and orders of the Secretary of Labor as modified by the provisions prescribed herein, and imposed pursuant to 23 U.S.C. 140 shall constitute the EEO and specific affirmative action standards for the contractor's project activities under

this contract. The provisions of the Americans with Disabilities Act of 1990 (42 U.S.C. 12101 et seq.) set forth under 28 CFR 35 and 29 CFR 1630 are incorporated by reference in this contract. In the execution of this contract, the contractor agrees to comply with the following minimum specific requirement activities of EEO:

a. The contractor will work with the contracting agency and the Federal Government to ensure that it has made every good faith effort to provide equal opportunity with respect to all of its terms and conditions of employment and in their review of activities under the contract.

b. The contractor will accept as its operating policy the following statement:

"It is the policy of this Company to assure that applicants are employed, and that employees are treated during employment, without regard to their race, religion, sex, color, national origin, age or disability. Such action shall include: employment, upgrading, demotion, or transfer; recruitment or recruitment advertising; layoff or termination; rates of pay or other forms of compensation; and selection for training, including apprenticeship, pre-apprenticeship, and/or on-the-job training."

2. EEO Officer: The contractor will designate and make known to the contracting officers an EEO Officer who will have the responsibility for and must be capable of effectively administering and promoting an active EEO program and who must be assigned adequate authority and responsibility to do so.

3. Dissemination of Policy: All members of the contractor's staff who are authorized to hire, supervise, promote, and discharge employees, or who recommend such action, or who are substantially involved in such action, will be made fully cognizant of, and will implement, the contractor's EEO policy and contractual responsibilities to provide EEO in each grade and classification of employment. To ensure that the above agreement will be met, the following actions will be taken as a minimum:

a. Periodic meetings of supervisory and personnel office employees will be conducted before the start of work and then not less often than once every six months, at which time the contractor's EEO policy and its implementation will be reviewed and explained. The meetings will be conducted by the EEO Officer.

b. All new supervisory or personnel office employees will be given a thorough indoctrination by the EEO Officer, covering all major aspects of the contractor's EEO obligations within thirty days following their reporting for duty with the contractor.

c. All personnel who are engaged in direct recruitment for the project will be instructed by the EEO Officer in the contractor's procedures for locating and hiring minorities and women.

d. Notices and posters setting forth the contractor's EEO policy will be placed in areas readily accessible to employees, applicants for employment and potential employees.

e. The contractor's EEO policy and the procedures to implement such policy will be brought to the attention of employees by means of meetings, employee handbooks, or other appropriate means.

4. Recruitment: When advertising for employees, the contractor will include in all advertisements for employees the notation: "An Equal Opportunity Employer." All such advertisements will be placed in publications having a large circulation among minorities and women in the area from which the project work force would normally be derived.

a. The contractor will, unless precluded by a valid bargaining agreement, conduct systematic and direct recruitment through public and private employee referral sources likely to yield qualified minorities and women. To meet this requirement, the contractor will identify sources of potential minority group employees, and establish with such identified sources procedures whereby minority and women applicants may be referred to the contractor for employment consideration.

b. In the event the contractor has a valid bargaining agreement providing for exclusive hiring hall referrals, the contractor is expected to observe the provisions of that agreement to the extent that the system meets the contractor's compliance with EEO contract provisions. Where implementation of such an agreement has the effect of discriminating against minorities or women, or obligates the contractor to do the same, such implementation violates Federal nondiscrimination provisions.

c. The contractor will encourage its present employees to refer minorities and women as applicants for employment. Information and procedures with regard to referring such applicants will be discussed with employees.

5. Personnel Actions: Wages, working conditions, and employee benefits shall be established and administered, and personnel actions of every type, including hiring, upgrading, promotion, transfer, demotion, layoff, and termination, shall be taken without regard to race, color, religion, sex, national origin, age or disability. The following procedures shall be followed:

a. The contractor will conduct periodic inspections of project sites to insure that working conditions and employee facilities do not indicate discriminatory treatment of project site personnel.

b. The contractor will periodically evaluate the spread of wages paid within each classification to determine any evidence of discriminatory wage practices.

c. The contractor will periodically review selected personnel actions in depth to determine whether there is evidence of discrimination. Where evidence is found, the contractor will promptly take corrective action. If the review indicates that the discrimination may extend beyond the actions reviewed, such corrective action shall include all affected persons.

d. The contractor will promptly investigate all complaints of alleged discrimination made to the contractor in connection with its obligations under this contract, will attempt to resolve such complaints, and will take appropriate corrective action within a reasonable time. If the investigation indicates that the discrimination may affect persons other than the complainant, such corrective action shall include such other persons. Upon completion of each investigation, the contractor will inform every complainant of all of their avenues of appeal.

6. Training and Promotion:

a. The contractor will assist in locating, qualifying, and increasing the skills of minorities and women who are

DocuSign Envelope ID: BAA9924A-B365-44D4-95BB-4AAB9E87ACFD

applicants for employment or current employees. Such efforts should be aimed at developing full journey level status employees in the type of trade or job classification involved.

b. Consistent with the contractor's work force requirements and as permissible under Federal and State regulations, the contractor shall make full use of training programs, i.e., apprenticeship, and on-the-job training programs for the geographical area of contract performance. In the event a special provision for training is provided under this contract, this subparagraph will be superseded as indicated in the special provision. The contracting agency may reserve training positions for persons who receive welfare assistance in accordance with 23 U.S.C. 140(a).

c. The contractor will advise employees and applicants for employment of available training programs and entrance requirements for each.

d. The contractor will periodically review the training and promotion potential of employees who are minorities and women and will encourage eligible employees to apply for such training and promotion.

7. Unions: If the contractor relies in whole or in part upon unions as a source of employees, the contractor will use good faith efforts to obtain the cooperation of such unions to increase opportunities for minorities and women. Actions by the contractor, either directly or through a contractor's association acting as agent, will include the procedures set forth below:

a. The contractor will use good faith efforts to develop, in cooperation with the unions, joint training programs aimed toward qualifying more minorities and women for membership in the unions and increasing the skills of minorities and women so that they may qualify for higher paying employment.

b. The contractor will use good faith efforts to incorporate an EEO clause into each union agreement to the end that such union will be contractually bound to refer applicants without regard to their race, color, religion, sex, national origin, age or disability.

c. The contractor is to obtain information as to the referral practices and policies of the labor union except that to the extent such information is within the exclusive possession of the labor union and such labor union refuses to furnish such information to the contractor, the contractor shall so certify to the contracting agency and shall set forth what efforts have been made to obtain such information.

d. In the event the union is unable to provide the contractor with a reasonable flow of referrals within the time limit set forth in the collective bargaining agreement, the contractor will, through independent recruitment efforts, fill the employment vacancies without regard to race, color, religion, sex, national origin, age or disability; making full efforts to obtain qualified and/or qualifiable minorities and women. The failure of a union to provide sufficient referrals (even though it is obligated to provide exclusive referrals under the terms of a collective bargaining agreement) does not relieve the contractor from the requirements of this paragraph. In the event the union referral practice prevents the contractor from meeting the obligations pursuant to Executive Order 11246, as amended, and these special provisions, such contractor shall immediately notify the contracting agency.

8. Reasonable Accommodation for Applicants / Employees with Disabilities: The contractor must be familiar with the requirements for and comply with the Americans with Disabilities Act and all rules and regulations established there under. Employers must provide reasonable accommodation in all employment activities unless to do so would cause an undue hardship.

9. Selection of Subcontractors, Procurement of Materials and Leasing of Equipment: The contractor shall not discriminate on the grounds of race, color, religion, sex, national origin, age or disability in the selection and retention of subcontractors, including procurement of materials and leases of equipment. The contractor shall take all necessary and reasonable steps to ensure nondiscrimination in the administration of this contract.

a. The contractor shall notify all potential subcontractors and suppliers and lessors of their EEO obligations under this contract.

b. The contractor will use good faith efforts to ensure subcontractor compliance with their EEO obligations.

10. Assurance Required by 49 CFR 26.13(b):

a. The requirements of 49 CFR Part 26 and the State DOT's U.S. DOT-approved DBE program are incorporated by reference.

b. The contractor or subcontractor shall not discriminate on the basis of race, color, national origin, or sex in the performance of this contract. The contractor shall carry out applicable requirements of 49 CFR Part 26 in the award and administration of DOT-assisted contracts. Failure by the contractor to carry out these requirements is a material breach of this contract, which may result in the termination of this contract or such other remedy as the contracting agency deems appropriate.

11. Records and Reports: The contractor shall keep such records as necessary to document compliance with the EEO requirements. Such records shall be retained for a period of three years following the date of the final payment to the contractor for all contract work and shall be available at reasonable times and places for inspection by authorized representatives of the contracting agency and the FHWA.

a. The records kept by the contractor shall document the following:

(1) The number and work hours of minority and non-minority group members and women employed in each work classification on the project;

(2) The progress and efforts being made in cooperation with unions, when applicable, to increase employment opportunities for minorities and women; and

(3) The progress and efforts being made in locating, hiring, training, qualifying, and upgrading minorities and women;

b. The contractors and subcontractors will submit an annual report to the contracting agency each July for the duration of the project, indicating the number of minority, women, and non-minority group employees currently engaged in each work classification required by the contract work. This information is to be reported on Form FHWA-1391. The staffing data should represent the project work force on board in all or any part of the last payroll period preceding the end of July. If on-the-job training is being required by special provision, the contractor

will be required to collect and report training data. The employment data should reflect the work force on board during all or any part of the last payroll period preceding the end of July.

III. NONSEGREGATED FACILITIES

This provision is applicable to all Federal-aid construction contracts and to all related construction subcontracts of $10,000 or more.

The contractor must ensure that facilities provided for employees are provided in such a manner that segregation on the basis of race, color, religion, sex, or national origin cannot result. The contractor may neither require such segregated use by written or oral policies nor tolerate such use by employee custom. The contractor's obligation extends further to ensure that its employees are not assigned to perform their services at any location, under the contractor's control, where the facilities are segregated. The term "facilities" includes waiting rooms, work areas, restaurants and other eating areas, time clocks, restrooms, washrooms, locker rooms, and other storage or dressing areas, parking lots, drinking fountains, recreation or entertainment areas, transportation, and housing provided for employees. The contractor shall provide separate or single-user restrooms and necessary dressing or sleeping areas to assure privacy between sexes.

IV. DAVIS-BACON AND RELATED ACT PROVISIONS

This section is applicable to all Federal-aid construction projects exceeding $2,000 and to all related subcontracts and lower-tier subcontracts (regardless of subcontract size). The requirements apply to all projects located within the right-of-way of a roadway that is functionally classified as Federal-aid highway. This excludes roadways functionally classified as local roads or rural minor collectors, which are exempt. Contracting agencies may elect to apply these requirements to other projects.

The following provisions are from the U.S. Department of Labor regulations in 29 CFR 5.5 "Contract provisions and related matters" with minor revisions to conform to the FHWA-1273 format and FHWA program requirements.

1. Minimum wages

a. All laborers and mechanics employed or working upon the site of the work, will be paid unconditionally and not less often than once a week, and without subsequent deduction or rebate on any account (except such payroll deductions as are permitted by regulations issued by the Secretary of Labor under the Copeland Act (29 CFR part 3)), the full amount of wages and bona fide fringe benefits (or cash equivalents thereof) due at time of payment computed at rates not less than those contained in the wage determination of the Secretary of Labor which is attached hereto and made a part hereof, regardless of any contractual relationship which may be alleged to exist between the contractor and such laborers and mechanics.

Contributions made or costs reasonably anticipated for bona fide fringe benefits under section 1(b)(2) of the Davis-Bacon Act on behalf of laborers or mechanics are considered wages paid to such laborers or mechanics, subject to the provisions of paragraph 1.d. of this section; also, regular contributions made or costs incurred for more than a weekly period (but not less often than quarterly) under plans, funds, or programs which cover the particular weekly period, are deemed to be constructively made or incurred during such weekly period. Such laborers and mechanics shall be paid the appropriate wage rate and fringe benefits on the wage determination for the classification of work actually performed, without regard to skill, except as provided in 29 CFR 5.5(a)(4). Laborers or mechanics performing work in more than one classification may be compensated at the rate specified for each classification for the time actually worked therein: Provided, That the employer's payroll records accurately set forth the time spent in each classification in which work is performed. The wage determination (including any additional classification and wage rates conformed under paragraph 1.b. of this section) and the Davis-Bacon poster (WH–1321) shall be posted at all times by the contractor and its subcontractors at the site of the work in a prominent and accessible place where it can be easily seen by the workers.

b.(1) The contracting officer shall require that any class of laborers or mechanics, including helpers, which is not listed in the wage determination and which is to be employed under the contract shall be classified in conformance with the wage determination. The contracting officer shall approve an additional classification and wage rate and fringe benefits therefore only when the following criteria have been met:

(i) The work to be performed by the classification requested is not performed by a classification in the wage determination; and

(ii) The classification is utilized in the area by the construction industry; and

(iii) The proposed wage rate, including any bona fide fringe benefits, bears a reasonable relationship to the wage rates contained in the wage determination.

(2) If the contractor and the laborers and mechanics to be employed in the classification (if known), or their representatives, and the contracting officer agree on the classification and wage rate (including the amount designated for fringe benefits where appropriate), a report of the action taken shall be sent by the contracting officer to the Administrator of the Wage and Hour Division, Employment Standards Administration, U.S. Department of Labor, Washington, DC 20210. The Administrator, or an authorized representative, will approve, modify, or disapprove every additional classification action within 30 days of receipt and so advise the contracting officer or will notify the contracting officer within the 30-day period that additional time is necessary.

(3) In the event the contractor, the laborers or mechanics to be employed in the classification or their representatives, and the contracting officer do not agree on the proposed classification and wage rate (including the amount designated for fringe benefits, where appropriate), the contracting officer shall refer the questions, including the views of all interested parties and the recommendation of the contracting officer, to the Wage and Hour Administrator for determination. The Wage and Hour Administrator, or an authorized representative, will issue a determination within 30 days of receipt and so advise the contracting officer or

will notify the contracting officer within the 30-day period that additional time is necessary.

(4) The wage rate (including fringe benefits where appropriate) determined pursuant to paragraphs 1.b.(2) or 1.b.(3) of this section, shall be paid to all workers performing work in the classification under this contract from the first day on which work is performed in the classification.

c. Whenever the minimum wage rate prescribed in the contract for a class of laborers or mechanics includes a fringe benefit which is not expressed as an hourly rate, the contractor shall either pay the benefit as stated in the wage determination or shall pay another bona fide fringe benefit or an hourly cash equivalent thereof.

d. If the contractor does not make payments to a trustee or other third person, the contractor may consider as part of the wages of any laborer or mechanic the amount of any costs reasonably anticipated in providing bona fide fringe benefits under a plan or program, Provided, That the Secretary of Labor has found, upon the written request of the contractor, that the applicable standards of the Davis-Bacon Act have been met. The Secretary of Labor may require the contractor to set aside in a separate account assets for the meeting of obligations under the plan or program.

2. Withholding

The contracting agency shall upon its own action or upon written request of an authorized representative of the Department of Labor, withhold or cause to be withheld from the contractor under this contract, or any other Federal contract with the same prime contractor, or any other federally-assisted contract subject to Davis-Bacon prevailing wage requirements, which is held by the same prime contractor, so much of the accrued payments or advances as may be considered necessary to pay laborers and mechanics, including apprentices, trainees, and helpers, employed by the contractor or any subcontractor the full amount of wages required by the contract. In the event of failure to pay any laborer or mechanic, including any apprentice, trainee, or helper, employed or working on the site of the work, all or part of the wages required by the contract, the contracting agency may, after written notice to the contractor, take such action as may be necessary to cause the suspension of any further payment, advance, or guarantee of funds until such violations have ceased.

3. Payrolls and basic records

a. Payrolls and basic records relating thereto shall be maintained by the contractor during the course of the work and preserved for a period of three years thereafter for all laborers and mechanics working at the site of the work. Such records shall contain the name, address, and social security number of each such worker, his or her correct classification, hourly rates of wages paid (including rates of contributions or costs anticipated for bona fide fringe benefits or cash equivalents thereof of the types described in section 1(b)(2)(B) of the Davis-Bacon Act), daily and weekly number of hours worked, deductions made and actual wages paid. Whenever the Secretary of Labor has found under 29 CFR 5.5(a)(1)(iv) that the wages of any laborer or mechanic include the amount of any costs reasonably anticipated in providing benefits under a plan or program described in section 1(b)(2)(B) of the Davis-Bacon Act, the contractor shall maintain records which show that the commitment to provide such benefits is enforceable, that the plan or program is financially responsible, and that the plan or program has been communicated in writing to the laborers or mechanics affected, and records which show the costs anticipated or the actual cost incurred in providing such benefits. Contractors employing apprentices or trainees under approved programs shall maintain written evidence of the registration of apprenticeship programs and certification of trainee programs, the registration of the apprentices and trainees, and the ratios and wage rates prescribed in the applicable programs.

b.(1) The contractor shall submit weekly for each week in which any contract work is performed a copy of all payrolls to the contracting agency. The payrolls submitted shall set out accurately and completely all of the information required to be maintained under 29 CFR 5.5(a)(3)(i), except that full social security numbers and home addresses shall not be included on weekly transmittals. Instead the payrolls shall only need to include an individually identifying number for each employee (e.g. , the last four digits of the employee's social security number). The required weekly payroll information may be submitted in any form desired. Optional Form WH–347 is available for this purpose from the Wage and Hour Division Web site at http://www.dol.gov/esa/whd/forms/wh347instr.htm or its successor site. The prime contractor is responsible for the submission of copies of payrolls by all subcontractors. Contractors and subcontractors shall maintain the full social security number and current address of each covered worker, and shall provide them upon request to the contracting agency for transmission to the State DOT, the FHWA or the Wage and Hour Division of the Department of Labor for purposes of an investigation or audit of compliance with prevailing wage requirements. It is not a violation of this section for a prime contractor to require a subcontractor to provide addresses and social security numbers to the prime contractor for its own records, without weekly submission to the contracting agency..

(2) Each payroll submitted shall be accompanied by a "Statement of Compliance," signed by the contractor or subcontractor or his or her agent who pays or supervises the payment of the persons employed under the contract and shall certify the following:

(i) That the payroll for the payroll period contains the information required to be provided under §5.5 (a)(3)(ii) of Regulations, 29 CFR part 5, the appropriate information is being maintained under §5.5 (a)(3)(i) of Regulations, 29 CFR part 5, and that such information is correct and complete;

(ii) That each laborer or mechanic (including each helper, apprentice, and trainee) employed on the contract during the payroll period has been paid the full weekly wages earned, without rebate, either directly or indirectly, and that no deductions have been made either directly or indirectly from the full wages earned, other than permissible deductions as set forth in Regulations, 29 CFR part 3;

(iii) That each laborer or mechanic has been paid not less than the applicable wage rates and fringe benefits or cash equivalents for the classification of work performed, as specified in the applicable wage determination incorporated into the contract.

DocuSign Envelope ID: BAA9924A-B365-44D4-95BB-4AAB9E87ACFD

(3) The weekly submission of a properly executed certification set forth on the reverse side of Optional Form WH–347 shall satisfy the requirement for submission of the "Statement of Compliance" required by paragraph 3.b.(2) of this section.

(4) The falsification of any of the above certifications may subject the contractor or subcontractor to civil or criminal prosecution under section 1001 of title 18 and section 231 of title 31 of the United States Code.

c. The contractor or subcontractor shall make the records required under paragraph 3.a. of this section available for inspection, copying, or transcription by authorized representatives of the contracting agency, the State DOT, the FHWA, or the Department of Labor, and shall permit such representatives to interview employees during working hours on the job. If the contractor or subcontractor fails to submit the required records or to make them available, the FHWA may, after written notice to the contractor, the contracting agency or the State DOT, take such action as may be necessary to cause the suspension of any further payment, advance, or guarantee of funds. Furthermore, failure to submit the required records upon request or to make such records available may be grounds for debarment action pursuant to 29 CFR 5.12.

4. Apprentices and trainees

a. Apprentices (programs of the USDOL).

Apprentices will be permitted to work at less than the predetermined rate for the work they performed when they are employed pursuant to and individually registered in a bona fide apprenticeship program registered with the U.S. Department of Labor, Employment and Training Administration, Office of Apprenticeship Training, Employer and Labor Services, or with a State Apprenticeship Agency recognized by the Office, or if a person is employed in his or her first 90 days of probationary employment as an apprentice in such an apprenticeship program, who is not individually registered in the program, but who has been certified by the Office of Apprenticeship Training, Employer and Labor Services or a State Apprenticeship Agency (where appropriate) to be eligible for probationary employment as an apprentice.

The allowable ratio of apprentices to journeymen on the job site in any craft classification shall not be greater than the ratio permitted to the contractor as to the entire work force under the registered program. Any worker listed on a payroll at an apprentice wage rate, who is not registered or otherwise employed as stated above, shall be paid not less than the applicable wage rate on the wage determination for the classification of work actually performed. In addition, any apprentice performing work on the job site in excess of the ratio permitted under the registered program shall be paid not less than the applicable wage rate on the wage determination for the work actually performed. Where a contractor is performing construction on a project in a locality other than that in which its program is registered, the ratios and wage rates (expressed in percentages of the journeyman's hourly rate) specified in the contractor's or subcontractor's registered program shall be observed.

Every apprentice must be paid at not less than the rate specified in the registered program for the apprentice's level of progress, expressed as a percentage of the journeymen hourly rate specified in the applicable wage determination. Apprentices shall be paid fringe benefits in accordance with the provisions of the apprenticeship program. If the apprenticeship program does not specify fringe benefits, apprentices must be paid the full amount of fringe benefits listed on the wage determination for the applicable classification. If the Administrator determines that a different practice prevails for the applicable apprentice classification, fringes shall be paid in accordance with that determination.

In the event the Office of Apprenticeship Training, Employer and Labor Services, or a State Apprenticeship Agency recognized by the Office, withdraws approval of an apprenticeship program, the contractor will no longer be permitted to utilize apprentices at less than the applicable predetermined rate for the work performed until an acceptable program is approved.

b. Trainees (programs of the USDOL).

Except as provided in 29 CFR 5.16, trainees will not be permitted to work at less than the predetermined rate for the work performed unless they are employed pursuant to and individually registered in a program which has received prior approval, evidenced by formal certification by the U.S. Department of Labor, Employment and Training Administration.

The ratio of trainees to journeymen on the job site shall not be greater than permitted under the plan approved by the Employment and Training Administration.

Every trainee must be paid at not less than the rate specified in the approved program for the trainee's level of progress, expressed as a percentage of the journeyman hourly rate specified in the applicable wage determination. Trainees shall be paid fringe benefits in accordance with the provisions of the trainee program. If the trainee program does not mention fringe benefits, trainees shall be paid the full amount of fringe benefits listed on the wage determination unless the Administrator of the Wage and Hour Division determines that there is an apprenticeship program associated with the corresponding journeyman wage rate on the wage determination which provides for less than full fringe benefits for apprentices. Any employee listed on the payroll at a trainee rate who is not registered and participating in a training plan approved by the Employment and Training Administration shall be paid not less than the applicable wage rate on the wage determination for the classification of work actually performed. In addition, any trainee performing work on the job site in excess of the ratio permitted under the registered program shall be paid not less than the applicable wage rate on the wage determination for the work actually performed.

In the event the Employment and Training Administration withdraws approval of a training program, the contractor will no longer be permitted to utilize trainees at less than the applicable predetermined rate for the work performed until an acceptable program is approved.

c. Equal employment opportunity. The utilization of apprentices, trainees and journeymen under this part shall be in conformity with the equal employment opportunity requirements of Executive Order 11246, as amended, and 29 CFR part 30.

d. Apprentices and Trainees (programs of the U.S. DOT).

Apprentices and trainees working under apprenticeship and skill training programs which have been certified by the Secretary of Transportation as promoting EEO in connection with Federal-aid highway construction programs are not subject to the requirements of paragraph 4 of this Section IV. The straight time hourly wage rates for apprentices and trainees under such programs will be established by the particular programs. The ratio of apprentices and trainees to journeymen shall not be greater than permitted by the terms of the particular program.

5. Compliance with Copeland Act requirements. The contractor shall comply with the requirements of 29 CFR part 3, which are incorporated by reference in this contract.

6. Subcontracts. The contractor or subcontractor shall insert Form FHWA-1273 in any subcontracts and also require the subcontractors to include Form FHWA-1273 in any lower tier subcontracts. The prime contractor shall be responsible for the compliance by any subcontractor or lower tier subcontractor with all the contract clauses in 29 CFR 5.5.

7. Contract termination: debarment. A breach of the contract clauses in 29 CFR 5.5 may be grounds for termination of the contract, and for debarment as a contractor and a subcontractor as provided in 29 CFR 5.12.

8. Compliance with Davis-Bacon and Related Act requirements. All rulings and interpretations of the Davis-Bacon and Related Acts contained in 29 CFR parts 1, 3, and 5 are herein incorporated by reference in this contract.

9. Disputes concerning labor standards. Disputes arising out of the labor standards provisions of this contract shall not be subject to the general disputes clause of this contract. Such disputes shall be resolved in accordance with the procedures of the Department of Labor set forth in 29 CFR parts 5, 6, and 7. Disputes within the meaning of this clause include disputes between the contractor (or any of its subcontractors) and the contracting agency, the U.S. Department of Labor, or the employees or their representatives.

10. Certification of eligibility.

a. By entering into this contract, the contractor certifies that neither it (nor he or she) nor any person or firm who has an interest in the contractor's firm is a person or firm ineligible to be awarded Government contracts by virtue of section 3(a) of the Davis-Bacon Act or 29 CFR 5.12(a)(1).

b. No part of this contract shall be subcontracted to any person or firm ineligible for award of a Government contract by virtue of section 3(a) of the Davis-Bacon Act or 29 CFR 5.12(a)(1).

c. The penalty for making false statements is prescribed in the U.S. Criminal Code, 18 U.S.C. 1001.

V. CONTRACT WORK HOURS AND SAFETY STANDARDS ACT

The following clauses apply to any Federal-aid construction contract in an amount in excess of $100,000 and subject to the overtime provisions of the Contract Work Hours and Safety Standards Act. These clauses shall be inserted in addition to the clauses required by 29 CFR 5.5(a) or 29 CFR 4.6. As used in this paragraph, the terms laborers and mechanics include watchmen and guards.

1. Overtime requirements. No contractor or subcontractor contracting for any part of the contract work which may require or involve the employment of laborers or mechanics shall require or permit any such laborer or mechanic in any workweek in which he or she is employed on such work to work in excess of forty hours in such workweek unless such laborer or mechanic receives compensation at a rate not less than one and one-half times the basic rate of pay for all hours worked in excess of forty hours in such workweek.

2. Violation; liability for unpaid wages; liquidated damages. In the event of any violation of the clause set forth in paragraph (1.) of this section, the contractor and any subcontractor responsible therefor shall be liable for the unpaid wages. In addition, such contractor and subcontractor shall be liable to the United States (in the case of work done under contract for the District of Columbia or a territory, to such District or to such territory), for liquidated damages. Such liquidated damages shall be computed with respect to each individual laborer or mechanic, including watchmen and guards, employed in violation of the clause set forth in paragraph (1.) of this section, in the sum of $10 for each calendar day on which such individual was required or permitted to work in excess of the standard workweek of forty hours without payment of the overtime wages required by the clause set forth in paragraph (1.) of this section.

3. Withholding for unpaid wages and liquidated damages. The FHWA or the contacting agency shall upon its own action or upon written request of an authorized representative of the Department of Labor withhold or cause to be withheld, from any moneys payable on account of work performed by the contractor or subcontractor under any such contract or any other Federal contract with the same prime contractor, or any other federally-assisted contract subject to the Contract Work Hours and Safety Standards Act, which is held by the same prime contractor, such sums as may be determined to be necessary to satisfy any liabilities of such contractor or subcontractor for unpaid wages and liquidated damages as provided in the clause set forth in paragraph (2.) of this section.

4. Subcontracts. The contractor or subcontractor shall insert in any subcontracts the clauses set forth in paragraph (1.) through (4.) of this section and also a clause requiring the subcontractors to include these clauses in any lower tier subcontracts. The prime contractor shall be responsible for compliance by any subcontractor or lower tier subcontractor with the clauses set forth in paragraphs (1.) through (4.) of this section.

DocuSign Envelope ID: BAA9924A-B365-44D4-95BB-4AAB9E87ACFD

VI. SUBLETTING OR ASSIGNING THE CONTRACT

This provision is applicable to all Federal-aid construction contracts on the National Highway System.

1. The contractor shall perform with its own organization contract work amounting to not less than 30 percent (or a greater percentage if specified elsewhere in the contract) of the total original contract price, excluding any specialty items designated by the contracting agency. Specialty items may be performed by subcontract and the amount of any such specialty items performed may be deducted from the total original contract price before computing the amount of work required to be performed by the contractor's own organization (23 CFR 635.116).

a. The term "perform work with its own organization" refers to workers employed or leased by the prime contractor, and equipment owned or rented by the prime contractor, with or without operators. Such term does not include employees or equipment of a subcontractor or lower tier subcontractor, agents of the prime contractor, or any other assignees. The term may include payments for the costs of hiring leased employees from an employee leasing firm meeting all relevant Federal and State regulatory requirements. Leased employees may only be included in this term if the prime contractor meets all of the following conditions:

(1) the prime contractor maintains control over the supervision of the day-to-day activities of the leased employees;
(2) the prime contractor remains responsible for the quality of the work of the leased employees;
(3) the prime contractor retains all power to accept or exclude individual employees from work on the project; and
(4) the prime contractor remains ultimately responsible for the payment of predetermined minimum wages, the submission of payrolls, statements of compliance and all other Federal regulatory requirements.

b. "Specialty Items" shall be construed to be limited to work that requires highly specialized knowledge, abilities, or equipment not ordinarily available in the type of contracting organizations qualified and expected to bid or propose on the contract as a whole and in general are to be limited to minor components of the overall contract.

2. The contract amount upon which the requirements set forth in paragraph (1) of Section VI is computed includes the cost of material and manufactured products which are to be purchased or produced by the contractor under the contract provisions.

3. The contractor shall furnish (a) a competent superintendent or supervisor who is employed by the firm, has full authority to direct performance of the work in accordance with the contract requirements, and is in charge of all construction operations (regardless of who performs the work) and (b) such other of its own organizational resources (supervision, management, and engineering services) as the contracting officer determines is necessary to assure the performance of the contract.

4. No portion of the contract shall be sublet, assigned or otherwise disposed of except with the written consent of the contracting officer, or authorized representative, and such consent when given shall not be construed to relieve the contractor of any responsibility for the fulfillment of the contract. Written consent will be given only after the contracting agency has assured that each subcontract is evidenced in writing and that it contains all pertinent provisions and requirements of the prime contract.

5. The 30% self-performance requirement of paragraph (1) is not applicable to design-build contracts; however, contracting agencies may establish their own self-performance requirements.

VII. SAFETY: ACCIDENT PREVENTION

This provision is applicable to all Federal-aid construction contracts and to all related subcontracts.

1. In the performance of this contract the contractor shall comply with all applicable Federal, State, and local laws governing safety, health, and sanitation (23 CFR 635). The contractor shall provide all safeguards, safety devices and protective equipment and take any other needed actions as it determines, or as the contracting officer may determine, to be reasonably necessary to protect the life and health of employees on the job and the safety of the public and to protect property in connection with the performance of the work covered by the contract.

2. It is a condition of this contract, and shall be made a condition of each subcontract, which the contractor enters into pursuant to this contract, that the contractor and any subcontractor shall not permit any employee, in performance of the contract, to work in surroundings or under conditions which are unsanitary, hazardous or dangerous to his/her health or safety, as determined under construction safety and health standards (29 CFR 1926) promulgated by the Secretary of Labor, in accordance with Section 107 of the Contract Work Hours and Safety Standards Act (40 U.S.C. 3704).

3. Pursuant to 29 CFR 1926.3, it is a condition of this contract that the Secretary of Labor or authorized representative thereof, shall have right of entry to any site of contract performance to inspect or investigate the matter of compliance with the construction safety and health standards and to carry out the duties of the Secretary under Section 107 of the Contract Work Hours and Safety Standards Act (40 U.S.C.3704).

VIII. FALSE STATEMENTS CONCERNING HIGHWAY PROJECTS

This provision is applicable to all Federal-aid construction contracts and to all related subcontracts.

In order to assure high quality and durable construction in conformity with approved plans and specifications and a high degree of reliability on statements and representations made by engineers, contractors, suppliers, and workers on Federal-aid highway projects, it is essential that all persons concerned with the project perform their functions as carefully, thoroughly, and honestly as possible. Willful falsification, distortion, or misrepresentation with respect to any facts related to the project is a violation of Federal law. To prevent any misunderstanding regarding the seriousness of these and similar acts, Form FHWA-1022 shall be posted on each Federal-aid highway project (23 CFR 635) in one or more places where it is readily available to all persons concerned with the project:

18 U.S.C. 1020 reads as follows:

DocuSign Envelope ID: BAA9924A-B365-44D4-95BB-4AAB9E87ACFD

"Whoever, being an officer, agent, or employee of the United States, or of any State or Territory, or whoever, whether a person, association, firm, or corporation, knowingly makes any false statement, false representation, or false report as to the character, quality, quantity, or cost of the material used or to be used, or the quantity or quality of the work performed or to be performed, or the cost thereof in connection with the submission of plans, maps, specifications, contracts, or costs of construction on any highway or related project submitted for approval to the Secretary of Transportation; or

Whoever knowingly makes any false statement, false representation, false report or false claim with respect to the character, quality, quantity, or cost of any work performed or to be performed, or materials furnished or to be furnished, in connection with the construction of any highway or related project approved by the Secretary of Transportation; or

Whoever knowingly makes any false statement or false representation as to material fact in any statement, certificate, or report submitted pursuant to provisions of the Federal-aid Roads Act approved July 1, 1916, (39 Stat. 355), as amended and supplemented;

Shall be fined under this title or imprisoned not more than 5 years or both."

IX. IMPLEMENTATION OF CLEAN AIR ACT AND FEDERAL WATER POLLUTION CONTROL ACT

This provision is applicable to all Federal-aid construction contracts and to all related subcontracts.

By submission of this bid/proposal or the execution of this contract, or subcontract, as appropriate, the bidder, proposer, Federal-aid construction contractor, or subcontractor, as appropriate, will be deemed to have stipulated as follows:

1. That any person who is or will be utilized in the performance of this contract is not prohibited from receiving an award due to a violation of Section 508 of the Clean Water Act or Section 306 of the Clean Air Act.
2. That the contractor agrees to include or cause to be included the requirements of paragraph (1) of this Section X in every subcontract, and further agrees to take such action as the contracting agency may direct as a means of enforcing such requirements.

X. CERTIFICATION REGARDING DEBARMENT, SUSPENSION, INELIGIBILITY AND VOLUNTARY EXCLUSION

This provision is applicable to all Federal-aid construction contracts, design-build contracts, subcontracts, lower-tier subcontracts, purchase orders, lease agreements, consultant contracts or any other covered transaction requiring FHWA approval or that is estimated to cost $25,000 or more – as defined in 2 CFR Parts 180 and 1200.

1. Instructions for Certification – First Tier Participants:

a. By signing and submitting this proposal, the prospective first tier participant is providing the certification set out below.

b. The inability of a person to provide the certification set out below will not necessarily result in denial of participation in this covered transaction. The prospective first tier participant shall submit an explanation of why it cannot provide the certification set out below. The certification or explanation will be considered in connection with the department or agency's determination whether to enter into this transaction. However, failure of the prospective first tier participant to furnish a certification or an explanation shall disqualify such a person from participation in this transaction.

c. The certification in this clause is a material representation of fact upon which reliance was placed when the contracting agency determined to enter into this transaction. If it is later determined that the prospective participant knowingly rendered an erroneous certification, in addition to other remedies available to the Federal Government, the contracting agency may terminate this transaction for cause of default.

d. The prospective first tier participant shall provide immediate written notice to the contracting agency to whom this proposal is submitted if any time the prospective first tier participant learns that its certification was erroneous when submitted or has become erroneous by reason of changed circumstances.

e. The terms "covered transaction," "debarred," "suspended," "ineligible," "participant," "person," "principal," and "voluntarily excluded," as used in this clause, are defined in 2 CFR Parts 180 and 1200. "First Tier Covered Transactions" refers to any covered transaction between a grantee or subgrantee of Federal funds and a participant (such as the prime or general contract). "Lower Tier Covered Transactions" refers to any covered transaction under a First Tier Covered Transaction (such as subcontracts). "First Tier Participant" refers to the participant who has entered into a covered transaction with a grantee or subgrantee of Federal funds (such as the prime or general contractor). "Lower Tier Participant" refers any participant who has entered into a covered transaction with a First Tier Participant or other Lower Tier Participants (such as subcontractors and suppliers).

f. The prospective first tier participant agrees by submitting this proposal that, should the proposed covered transaction be entered into, it shall not knowingly enter into any lower tier covered transaction with a person who is debarred, suspended, declared ineligible, or voluntarily excluded from participation in this covered transaction, unless authorized by the department or agency entering into this transaction.

g. The prospective first tier participant further agrees by submitting this proposal that it will include the clause titled "Certification Regarding Debarment, Suspension, Ineligibility and Voluntary Exclusion-Lower Tier Covered Transactions," provided by the department or contracting agency, entering into this covered transaction, without modification, in all lower tier covered transactions and in all solicitations for lower tier covered transactions exceeding the $25,000 threshold.

h. A participant in a covered transaction may rely upon a certification of a prospective participant in a lower tier covered transaction that is not debarred, suspended, ineligible, or voluntarily excluded from the covered transaction, unless it knows that the certification is erroneous. A participant is responsible for ensuring that its principals are not suspended, debarred, or otherwise ineligible to participate in covered transactions. To verify the eligibility of its principals, as well as the eligibility of any lower tier prospective participants, each participant may, but is not required to, check the Excluded Parties List System website (https://www.epls.gov/), which is compiled by the General Services Administration.

DocuSign Envelope ID: BAA9924A-B365-44D4-95BB-4AAB9E87ACFD

i. Nothing contained in the foregoing shall be construed to require the establishment of a system of records in order to render in good faith the certification required by this clause. The knowledge and information of the prospective participant is not required to exceed that which is normally possessed by a prudent person in the ordinary course of business dealings.

j. Except for transactions authorized under paragraph (f) of these instructions, if a participant in a covered transaction knowingly enters into a lower tier covered transaction with a person who is suspended, debarred, ineligible, or voluntarily excluded from participation in this transaction, in addition to other remedies available to the Federal Government, the department or agency may terminate this transaction for cause or default.

* * * * *

2. Certification Regarding Debarment, Suspension, Ineligibility and Voluntary Exclusion – First Tier Participants:

a. The prospective first tier participant certifies to the best of its knowledge and belief, that it and its principals:

(1) Are not presently debarred, suspended, proposed for debarment, declared ineligible, or voluntarily excluded from participating in covered transactions by any Federal department or agency;

(2) Have not within a three-year period preceding this proposal been convicted of or had a civil judgment rendered against them for commission of fraud or a criminal offense in connection with obtaining, attempting to obtain, or performing a public (Federal, State or local) transaction or contract under a public transaction; violation of Federal or State antitrust statutes or commission of embezzlement, theft, forgery, bribery, falsification or destruction of records, making false statements, or receiving stolen property;

(3) Are not presently indicted for or otherwise criminally or civilly charged by a governmental entity (Federal, State or local) with commission of any of the offenses enumerated in paragraph (a)(2) of this certification; and

(4) Have not within a three-year period preceding this application/proposal had one or more public transactions (Federal, State or local) terminated for cause or default.

b. Where the prospective participant is unable to certify to any of the statements in this certification, such prospective participant shall attach an explanation to this proposal.

2. **Instructions for Certification - Lower Tier Participants:**

(Applicable to all subcontracts, purchase orders and other lower tier transactions requiring prior FHWA approval or estimated to cost $25,000 or more - 2 CFR Parts 180 and 1200)

a. By signing and submitting this proposal, the prospective lower tier is providing the certification set out below.

b. The certification in this clause is a material representation of fact upon which reliance was placed when this transaction was entered into. If it is later determined that the prospective lower tier participant knowingly rendered an erroneous certification, in addition to other remedies available to the Federal Government, the department, or agency with which this transaction originated may pursue available remedies, including suspension and/or debarment.

c. The prospective lower tier participant shall provide immediate written notice to the person to which this proposal is submitted if at any time the prospective lower tier participant learns that its certification was erroneous by reason of changed circumstances.

d. The terms "covered transaction," "debarred," "suspended," "ineligible," "participant," "person," "principal," and "voluntarily excluded," as used in this clause, are defined in 2 CFR Parts 180 and 1200. You may contact the person to which this proposal is submitted for assistance in obtaining a copy of those regulations. "First Tier Covered Transactions" refers to any covered transaction between a grantee or subgrantee of Federal funds and a participant (such as the prime or general contract). "Lower Tier Covered Transactions" refers to any covered transaction under a First Tier Covered Transaction (such as subcontracts). "First Tier Participant" refers to the participant who has entered into a covered transaction with a grantee or subgrantee of Federal funds (such as the prime or general contractor). "Lower Tier Participant" refers any participant who has entered into a covered transaction with a First Tier Participant or other Lower Tier Participants (such as subcontractors and suppliers).

e. The prospective lower tier participant agrees by submitting this proposal that, should the proposed covered transaction be entered into, it shall not knowingly enter into any lower tier covered transaction with a person who is debarred, suspended, declared ineligible, or voluntarily excluded from participation in this covered transaction, unless authorized by the department or agency with which this transaction originated.

f. The prospective lower tier participant further agrees by submitting this proposal that it will include this clause titled "Certification Regarding Debarment, Suspension, Ineligibility and Voluntary Exclusion-Lower Tier Covered Transaction," without modification, in all lower tier covered transactions and in all solicitations for lower tier covered transactions exceeding the $25,000 threshold.

g. A participant in a covered transaction may rely upon a certification of a prospective participant in a lower tier covered transaction that is not debarred, suspended, ineligible, or voluntarily excluded from the covered transaction, unless it knows that the certification is erroneous. A participant is responsible for ensuring that its principals are not suspended, debarred, or otherwise ineligible to participate in covered transactions. To verify the eligibility of its principals, as well as the eligibility of any lower tier prospective participants, each participant may, but is not required to, check the Excluded Parties List System website (https://www.epls.gov/), which is compiled by the General Services Administration.

h. Nothing contained in the foregoing shall be construed to require establishment of a system of records in order to render in good faith the certification required by this clause. The knowledge and information of participant is not required to exceed that which is normally possessed by a prudent person in the ordinary course of business dealings.

i. Except for transactions authorized under paragraph e of these instructions, if a participant in a covered transaction knowingly enters into a lower tier covered transaction with a person who is suspended, debarred, ineligible, or voluntarily excluded from participation in this transaction, in addition to other remedies available to the Federal Government, the

DocuSign Envelope ID: BAA9924A-B365-44D4-95BB-4AAB9E87ACFD

department or agency with which this transaction originated may pursue available remedies, including suspension and/or debarment.

* * * * *

Certification Regarding Debarment, Suspension, Ineligibility and Voluntary Exclusion--Lower Tier Participants:

1. The prospective lower tier participant certifies, by submission of this proposal, that neither it nor its principals is presently debarred, suspended, proposed for debarment, declared ineligible, or voluntarily excluded from participating in covered transactions by any Federal department or agency.

2. Where the prospective lower tier participant is unable to certify to any of the statements in this certification, such prospective participant shall attach an explanation to this proposal.

* * * * *

XI. CERTIFICATION REGARDING USE OF CONTRACT FUNDS FOR LOBBYING

This provision is applicable to all Federal-aid construction contracts and to all related subcontracts which exceed $100,000 (49 CFR 20).

1. The prospective participant certifies, by signing and submitting this bid or proposal, to the best of his or her knowledge and belief, that:

a. No Federal appropriated funds have been paid or will be paid, by or on behalf of the undersigned, to any person for influencing or attempting to influence an officer or employee of any Federal agency, a Member of Congress, an officer or employee of Congress, or an employee of a Member of Congress in connection with the awarding of any Federal contract, the making of any Federal grant, the making of any Federal loan, the entering into of any cooperative agreement, and the extension, continuation, renewal, amendment, or modification of any Federal contract, grant, loan, or cooperative agreement.

b. If any funds other than Federal appropriated funds have been paid or will be paid to any person for influencing or attempting to influence an officer or employee of any Federal agency, a Member of Congress, an officer or employee of Congress, or an employee of a Member of Congress in connection with this Federal contract, grant, loan, or cooperative agreement, the undersigned shall complete and submit Standard Form-LLL, "Disclosure Form to Report Lobbying," in accordance with its instructions.

2. This certification is a material representation of fact upon which reliance was placed when this transaction was made or entered into. Submission of this certification is a prerequisite for making or entering into this transaction imposed by 31 U.S.C. 1352. Any person who fails to file the required certification shall be subject to a civil penalty of not less than $10,000 and not more than $100,000 for each such failure.

3. The prospective participant also agrees by submitting its bid or proposal that the participant shall require that the language of this certification be included in all lower tier subcontracts, which exceed $100,000 and that all such recipients shall certify and disclose accordingly.

DocuSign Envelope ID: BAA9924A-B365-44D4-95BB-4AAB9E87ACFD

ATTACHMENT A - EMPLOYMENT AND MATERIALS PREFERENCE FOR APPALACHIAN DEVELOPMENT HIGHWAY SYSTEM OR APPALACHIAN LOCAL ACCESS ROAD CONTRACTS

This provision is applicable to all Federal-aid projects funded under the Appalachian Regional Development Act of 1965.

1. During the performance of this contract, the contractor undertaking to do work which is, or reasonably may be, done as on-site work, shall give preference to qualified persons who regularly reside in the labor area as designated by the DOL wherein the contract work is situated, or the subregion, or the Appalachian counties of the State wherein the contract work is situated, except:

a. To the extent that qualified persons regularly residing in the area are not available.

b. For the reasonable needs of the contractor to employ supervisory or specially experienced personnel necessary to assure an efficient execution of the contract work.

c. For the obligation of the contractor to offer employment to present or former employees as the result of a lawful collective bargaining contract, provided that the number of nonresident persons employed under this subparagraph (1c) shall not exceed 20 percent of the total number of employees employed by the contractor on the contract work, except as provided in subparagraph (4) below.

2. The contractor shall place a job order with the State Employment Service indicating (a) the classifications of the laborers, mechanics and other employees required to perform the contract work, (b) the number of employees required in each classification, (c) the date on which the participant estimates such employees will be required, and (d) any other pertinent information required by the State Employment Service to complete the job order form. The job order may be placed with the State Employment Service in writing or by telephone. If during the course of the contract work, the information submitted by the contractor in the original job order is substantially modified, the participant shall promptly notify the State Employment Service.

3. The contractor shall give full consideration to all qualified job applicants referred to him by the State Employment Service. The contractor is not required to grant employment to any job applicants who, in his opinion, are not qualified to perform the classification of work required.

4. If, within one week following the placing of a job order by the contractor with the State Employment Service, the State Employment Service is unable to refer any qualified job applicants to the contractor, or less than the number requested, the State Employment Service will forward a certificate to the contractor indicating the unavailability of applicants. Such certificate shall be made a part of the contractor's permanent project records. Upon receipt of this certificate, the contractor may employ persons who do not normally reside in the labor area to fill positions covered by the certificate, notwithstanding the provisions of subparagraph (1c) above.

5. The provisions of 23 CFR 633.207(e) allow the contracting agency to provide a contractual preference for the use of mineral resource materials native to the Appalachian region.

6. The contractor shall include the provisions of Sections 1 through 4 of this Attachment A in every subcontract for work which is, or reasonably may be, done as on-site work.

DocuSign Envelope ID: BAA9924A-B365-44D4-95BB-4AAB9E87ACFD

ATTACHMENT "F"

BUY AMERICA REQUIREMENTS

Source of Supply – Steel and Iron (Federal Aid Contracts Only): For Federal-aid contracts, the Contractor will only use steel and iron produced in the United States, in accordance with the buy America provisions of 23 CFR 635.410. Contractor will ensure that all manufacturing processes for these materials occur in the United States. A manufacturing process is any process that modifies the chemical content, physical shape, size or final finish of a product, beginning with the initial melding and mixing and continuing through the bending and coating stages. A manufactured steel or iron product is complete only when all grinding, drilling, welding, finishing and coating have been completed. If a domestic product is taken outside the United States for any process, it becomes foreign source material. When using steel and iron as a component of any manufactured product incorporated into the project (*e.g.*, concrete pipe, pre-stressed beams, corrugated steel pipe, etc.), these same provisions apply, except that the manufacturer may use minimal quantities of foreign steel and iron when the cost of such foreign materials does not exceed 0.1% of the compensation or $2,500, whichever is greater. These requirements are applicable to all steel and iron materials incorporated into the finished work, but are not applicable to steel and iron items that the Contractor uses but does not incorporate into the finished work. The Contractor shall provide a certification from the producer of steel or iron, or any product containing steel or iron as a component, stating that all steel or iron furnished or incorporated into the finished product was manufactured in the United States in accordance with the requirements of this provision. Such certification shall also include: (1) a statement that the product was produced entirely within the United States, or (2) a statement that the product was produced with the United States except for minimal quantities of foreign steel and iron and specify the actual value of the product. Each such certification shall be furnished to the AUTHORITY prior to incorporating the material into the project. When FHWA allows the use of foreign steel on a project, Contractor shall furnish invoices to document the costs of such material, and obtain the AUTHORITY'S written approval prior to incorporating the material into the project.

DocuSign Envelope ID: BAA9924A-B365-44D4-95BB-4AAB9E87ACFD

ATTACHMENT "G"

PERFORMANCE AND PAYMENT BOND

BY THIS BOND, WE, _____, Inc., as Principal and _____ a Corporation, as Surety, are bound to the Solid Waste Authority of Palm Beach County, hereinafter referred to as "Authority", in the sum of _____ **Dollars (up to $10,000,000),** for payment of which we bind ourselves, our heirs, personal representatives, successors, and assigns, jointly and severally.

THE CONDITION OF THIS BOND is that if Principal:

1. Performs the Agreement dated _____, 20_____ between Principal and Authority for Proposal of Hurricane/Disaster Debris Removal, Reduction and Disposal, **Agreement No. 22-201,** the Agreement being made a part of this bond by reference, in the time and in the manner prescribed in the Agreement, and;

2. Promptly makes payment to all claimants, as defined in Section 255.05(1), Florida Statutes, supplying Principal with labor, materials and supplies, used directly or indirectly by Principal in the prosecution of the work provided for in the Agreement, and;

3. Pays Authority all loss, damages, expenses, costs, and attorney's fees, including appellate proceedings, that Authority sustains because of a default by Principal under the Agreement, and;

4. Performs the guarantee of all work and materials furnished under the Agreement for the time specified in the Agreement, and;

5. At completion of all work covered by Agreement and Final Payment by Authority to Principal then Principal will replace this Performance and Payment Bond with a Proposal Bond, in the amount of 5% of this Performance and Payment Bond, to be held by the Authority as a guarantee that Principal will provide to the Authority a Performance and Payment Bond in the amount of up to $10,000,000 on the occasion of a subsequent Task Order in accordance with the above referenced Agreement;

then this bond is void; otherwise it remains in full force.

Surety shall be responsible for any and all liquidated damages imposed by the Authority for the referenced Agreement.

Any changes in or under the Agreement Documents and compliance or noncompliance with any formalities connected with the Agreement or the changes does not affect Surety's obligation under this bond. Any increase in the total Agreement amount as authorized by the Authority shall accordingly increase the Surety's obligation by the same dollar amount of said increase. CONTRACTOR shall be responsible for notification to Surety of all such changes.

See subsection (2) of Section 255.05, Florida Statutes as amended for the notice and time limitations for claimants.

Signed and sealed this ___ day of _____, 20___.

PRINCIPAL:_____

By: _____
Signature

WITNESS:

Name: _____

1. _____

Title: _____

2. _____

Address: _____

_____

Telephone: _____

SURETY: _____

By: _____
Signature

WITNESS:

Name: _____

1. _____

Title: _____

2. _____

Address: _____

_____

Telephone: _____

NOTE: Date of Bond must not be prior to date of Agreement. If CONTRACTOR is a Partnership, all partners must execute bond.

IMPORTANT: Surety companies executing bonds **must** appear and remain on the Treasury Department's most current list (Circular 570 as amended) during construction, guarantee and warranty periods, and be authorized to transact business in the State of Florida, and be pre-approved by the Authority.

YOUR PARTNER FOR
SOLID WASTE SOLUTIONS

REQUEST FOR PROPOSAL

FOR

HURRICANE/DISASTER DEBRIS REMOVAL, REDUCTION AND DISPOSAL

RFP NO. 22-201/DL

JANUARY 2022

SOLID WASTE AUTHORITY OF PALM BEACH COUNTY
7501 NORTH JOG ROAD
WEST PALM BEACH, FLORIDA 33412
(561) 640-4000

TABLE OF CONTENTS

PART I

GENERAL INFORMATION

1. Purpose....1
2. Pre-Proposal Conference....1
3. Background....1
4. Evaluation Process....1
5. Procurement Schedule....2
6. Proposal Submission and Withdrawal....2
7. Communication Protocol....2
8. Addenda....2
9. Rights of the Authority....3
10. Proposal Preparation Costs....3
11. Bond Requirements....4
12. Interpretations....4
13. Non-Collusion Affidavit....4
14. Public Entity Crimes....4
15. Public Records Act / Information Disclosure to Third Parties....4
16. Posting of Recommendation for Award....5
17. Insurance....5
18. Cone of Silence....5
19. Agreements with other Governmental Entities....7
20. Scrutinized Companies....7
21. Inspector General....7
22. Commercial Non-Discrimination Policy....8
23. Third Party Beneficiary Disclaimer....9
24. E-Verify – Employment Eligibility....9
25. Equal Business Opportunity Program....9

PART II

STATEMENT OF WORK

2.1. Project Description and Requirements....10
2.2. Introduction....10
2.3. Planning Standard for Debris Removal and Disposal....11
2.4. Debris Management....11
2.5 Scope of Work/Overview....13
2.6 Debris Removal and Disposal Operations....15
2.7 Temporary Debris Management Sites (TDMS) Operations....21
2.8. Processing, Loading and Hauling Material....24
2.9 Miscellaneous Requirements....24
2.10 Performance of Contractor....26

PART III

PROPOSAL SUBMISSION REQUIREMENTS

3.1. Proposal Submission Requirements and Format....27
3.2. Content....27

PART IV

PROPOSAL EVALUATION AND AWARD

4.1. General 31
4.2. Evaluation Criteria 31
4.3. Evaluation Method 31
4.4. Award 33

PART V

PROPOSAL FORMS

1. Proposal Form 1 – Transmittal Letter 34
2. Proposal Form 2 – Proposal Bond 37
3. Proposal Form 3 – Price Proposal 39
4. Proposal Form 4 – Non-Collusion Affidavit 42
5. Proposal Form 5 – Drug-Free Workplace 43
6. Proposal Form 6 – PROPOSER'S Qualification Statement 44
7. Proposal Form 7 – Scrutinized Certification List 49

PART VI

ATTACHMENTS

Attachment A – Sample Contract Agreement
Attachment B – Task Order Disaster Debris Management
Attachment C – Pre-Approved Temporary Debris Management Sites Map
Attachment D – Public Assistance Program and Policy Guide
Attachment E – Mobilization Schedule
Attachment F – FHWA Form 1273
Attachment G – Buy America Requirements
Attachment H – Performance and Payment Bond

PART I
GENERAL INFORMATION

1. PURPOSE:

A. The purpose of this Request for Proposal (RFP) is to solicit formal written Proposals from experienced and qualified individuals, corporations, partnerships and other legal entities (PROPOSER) to perform Hurricane/Disaster Debris Removal, Reduction, and Disposal Services for the Solid Waste Authority of Palm Beach County (AUTHORITY). The AUTHORITY envisions the need for four (4) CONTRACTORS to carry out the debris removal and disposal work throughout Palm Beach County.

B. The contract will be for an initial three (3) year term with the option for an additional three (3) year renewal upon review and approval by the AUTHORITY.

2. PRE-PROPOSAL CONFERENCE:

A. A Virtual Mandatory Pre-Proposal Conference will be held on **WEDNESDAY, FEBRUARY 2, 2022, at 10:00am,** open to all interested parties at which time the AUTHORITY staff shall be present to answer questions and explain the intent of the RFP documents.

B. Any conclusions reached at this conference which amend the RFP documents, will be issued in the form of a written Addendum.

3. BACKGROUND:

A. The AUTHORITY is a Dependent Special District created by the Florida State Legislature pursuant to Chapter 2001-331, laws of Florida, known as the Palm Beach County Solid Waste Act. The AUTHORITY is governed by the seven (7) elected County Commissioners of Palm Beach County, Florida. The governing board members are elected for terms as determined by the Solid Waste Act.

B. The AUTHORITY is the governmental agency responsible for providing an economical and environmentally conscious integrated Solid Waste Management System for Palm Beach County, Florida. With approximately 400 employees, the AUTHORITY provides solid waste disposal and recycling services and programs to the County's 1.5 million residents and businesses. The AUTHORITY also provides solid waste and recycling collection services to the residents and businesses in unincorporated Palm Beach County through private haulers under exclusive franchise agreements.

C. The AUTHORITY has built an award-winning integrated system of facilities that combines recycling, renewable energy and landfilling to effectively manage the county's waste. The AUTHORITY's system includes two waste-to-energy facilities, landfills, a recovered materials processing facility, a biosolids processing facility, seven (7) home chemical collection facilities and a network of six (6) transfer stations.

4. EVALUATION PROCESS:

The evaluation process will be conducted by the Evaluation Committee in accordance with, but not limited to, the methods and criteria described in *Part IV – Proposal Evaluation and Award*.

5. PROCUREMENT SCHEDULE:

A summary schedule of the major activities associated with the AUTHORITY'S procurement process for this Project is presented in *Table 1 – Procurement Schedule*. The AUTHORITY, at its sole and unfettered discretion, may modify the schedule as it deems appropriate. The AUTHORITY will notify of any changes in association with submittal dates by written Addenda in accordance with *Part I, Section 8 – Addenda*.

Table 1 - Procurement Schedule

NO.	ACTIVITY	DATE
1	Issue RFP	January 14, 2022
2	Mandatory Pre-Proposal Meeting	February 2, 2022
3	Last Date for Authority to Receive Questions on RFP	February 7, 2022
4	Last Date for Authority to Issue Addendum in Response to Questions	February 9, 2022
5	Proposal Submission Due Date	February 18, 2022
6	Evaluation Committee Meeting, *tentative date*	February 28, 2022

6. PROPOSAL SUBMISSION and WITHDRAWAL:

A. The AUTHORITY uses to the Negometrix e-Procurement system, a 100% digital method of accessing and responding to solicitations (Negometrix). Therefore, PROPOSERS must submit their proposal via Negometrix. The AUTHORITY must receive all Proposals **no later than 2:00 P.M.,** Eastern Time, on the date established in *Part I, Section 5 – Procurement Schedule, of this RFP.*

B. The AUTHORITY cautions those submitting Proposals to ensure the accuracy of the document uploads to Negometrix.

C. The PROPOSER may withdraw their Proposal by notifying the AUTHORITY'S Purchasing Services office in writing at any time prior to the time set for the Proposals receipt deadline. PROPOSERS may withdraw their Proposals in person or through an authorized representative. Proposals, once opened, become the property of the AUTHORITY and will not be returned to the PROPOSERS.

7. COMMUNICATION PROTOCOL:

All questions and communications concerning this procurement process must be directed to Diane LeRay, CPPO, CPPB, Procurement Manager. All requests for clarifications or additional information **must be submitted in writing via electronic mail to dleray@swa.org or through Negometrix. All questions shall be submitted no later than the date specified in *Part 1, Section 5 – Procurement Schedule*** of this RFP. The AUTHORITY will record its responses to questions, if any, and address them in the form of a written Addendum to this RFP.

8. ADDENDA:

A. Should revisions to the RFP become necessary, the AUTHORITY will issue written Addenda. All Addenda must be acknowledged. This Acknowledgement must be included in Proposal Form 1 – Transmittal Letter. PROPOSER'S submittal may be rejected as non-responsive if PROPOSER has failed to submit Proposal without Addenda Acknowledgement. ***The AUTHORITY will issue all addenda through Negometrix.***

B. All PROPOSERS should contact the AUTHORITY no more than five (5) calendar days before the due date for submitting Proposals to ascertain whether any Addenda have been issued. Failure of the PROPOSER to

make this inquiry could result in its Proposal being non-responsive in the event addenda were issued and not acknowledged by the PROPOSER in their submittal.

C. No Addenda will be issued later than five (5) calendar days prior to the due date for receipt of Proposals except an Addendum withdrawing the RFP or one that includes postponement of the date for receipt of Proposals.

9. RIGHTS OF THE AUTHORITY:

This RFP constitutes an invitation for submission of Proposals to the AUTHORITY. This RFP does not obligate the AUTHORITY to procure or contract for any of the scopes of services set forth in this RFP. The AUTHORITY reserves and holds at its sole and unfettered discretion, various rights and options under Florida law, including without limitation, the following:

- To prepare and issue addenda to the RFP that may expand, restrict, or cancel any portion or all work described in the RFP without obligation to commence a new procurement process or issue a modified or amended RFP;
- To receive questions from potential PROPOSERS and to provide such answers in writing as it deems appropriate;
- To waive any informalities, technicalities or irregularities in the Proposals submitted;
- To reject any and all Proposal submissions;
- To change the date for receipt of Proposals or any deadlines and dates specified in the RFP;
- To change the procurement and/or selection process prior to receipt of Proposals;
- To conduct investigations with respect to the information provided by each PROPOSER and to request additional information (either in writing or in presentations and interviews) to support such PROPOSER'S responses and submittals;
- To visit facilities referenced in the PROPOSER'S submittal at any time or times during the procurement process;
- To seek clarification of Proposals from the PROPOSERS either in writing or in presentations and interviews, and;
- To cancel the RFP with or without the substitution of another RFP.

10. PROPOSAL PREPARATION COSTS:

The AUTHORITY accepts no liability for costs and expenses incurred by the PROPOSER in preparation and submission of Proposals and responses to clarifications from the AUTHORITY, potential site visits and interviews, negotiations, future RFP or any other work performed in connection with the Proposal. Each PROPOSER that enters into the procurement process shall prepare the required materials and submittals at its own expense and with the express understanding that they cannot make any claims whatsoever for reimbursement from the AUTHORITY for the costs and expenses associated with the process. PROPOSER should prepare their submittal providing a straightforward and concise description of the PROPOSER'S ability to meet the requirements of the RFP. Unnecessarily elaborate brochures, artwork, expensive paper, bindings, visual and other presentation materials, beyond that sufficient to present a complete and effective response to this RFP is not desired.

11. BOND REQUIREMENTS:

A. PROPOSER shall submit a completed Proposal Form 2 – Proposal Bond (same as a Bid Bond) in the amount of five hundred thousand dollars ($500,000). Unsuccessful PROPOSER'S Proposal Bond will be returned upon execution of an Agreement with the successful PROPOSER. **Proposal Form 2 – Proposal Bond shall also be accompanied by written Irrevocable Letter of Commitment** from an A- or better rated Surety Company licensed to do business in the State of Florida to provide a ten-million-dollar ($10,000,000) Performance and Payment Bond on the AUTHORITY'S form (Attachment H) upon issuance of first Task Order.

B. The AUTHORITY requires that the Proposal Bond of PROPOSER that is selected be in effect for the entire term of the Agreement and also that the Irrevocable Letter of Commitment to provide the Performance and Payment Bond also be in effect for the entire term of the Agreement until a debris generating event occurs and the successful PROPOSER is called to active duty. At the start of any and all active-duty periods the Proposal Bond will be returned to the successful PROPOSER(s) in exchange for the Performance and Payment Bond which will need to be in effect for the duration of the active duty period. Under no circumstances shall the successful PROPOSER start work until he/she has supplied an acceptable Performance and Payment Bond. If the successful PROPOSER fails to supply an acceptable Performance and Payment Bond, as specified in this RFP, the AUTHORITY shall be entitled to retain the Proposal Bond to rectify the PROPOSER'S unacceptable performance.

12. INTERPRETATIONS:

A. The AUTHORITY will not be bound by or responsible for any explanation or interpretation of the RFP documents other than those given in written addenda. In no event shall PROPOSERS rely on any oral statement by the AUTHORITY, its staff, agents, advisors, or consultants.

B. Any PROPOSER that submits in its Proposal to the AUTHORITY any information which is determined to be substantially inaccurate, misleading, exaggerated, or incorrect, may be disqualified from consideration.

13. NON – COLLUSION AFFIDAVIT:

The PROPOSER is required to submit Proposal Form 4 – Non-Collusion Affidavit stipulating Agreement to the following: "PROPOSER certifies that its Proposal is made without previous understanding, Agreement, or connection with any person, firm, or corporation making a Proposal for the same item(s) and is in all respects fair, without outside control, collusion, fraud, or otherwise illegal action".

14. PUBLIC ENTITY CRIMES:

Pursuant to Section 287.133(2)(a), as amended: A person or affiliate who has been placed on the convicted vendor list following a conviction for a public entity crime may not submit a bid on a contract to provide any goods or services to a public entity, may not submit a bid on a contract with a public entity for the construction or repair of a public building or public work, may not submit bids on leases of real property to a public entity, may not be awarded or perform work as a contractor, provider supplier, subcontractor, or consultant under a contract with any public entity, and may not transact business with any public entity in excess of the threshold amount provided in Section 287.017 for CATEGORY TWO for a period of thirty-six (36) months from the date of being placed on the convicted vendor list.

15. PUBLIC RECORDS ACT/INFORMATION DISCLOSURE TO THIRD PARTIES:

A. Sealed bids, proposals, SOQs, or replies received by the AUTHORITY pursuant to a competitive solicitation are exempt from s. 119.07(1) and s.24(a), Article I of the State Constitution until such time as the AUTHORITY provides notice of an intended decision or until thirty (30) days after opening the bids,

proposals, SOQs, or final replies, whichever is earlier. As such, the AUTHORITY shall not in any way be liable or responsible for the proper disclosure or result of the proper disclosure of any submissions or portions thereof submitted in response to the RFP.

B. The law provides for certain exemptions from disclosure. If the PROPOSER believes that some information contained in their Proposals is exempt from disclosure, the PROPOSER is instructed to label such information as specifying the exact section of the public records, or other Florida or Federal law that justifies nondisclosure, and request in writing the AUTHORITY keep such information confidential and free from disclosure. The AUTHORITY reserves the right to make any final determination of the applicability of the public records or other Florida or Federal law. Prior to releasing any information, the AUTHORITY will inform the PROPOSER and allow the PROPOSER to seek an injunction prohibiting the AUTHORITY from releasing the information. Each PROPOSER agrees that the AUTHORITY may reveal any confidential and exempt materials to designated AUTHORITY staff and Palm Beach County officials involved in the evaluation process, and to any outside consultant or third parties who serve on the Evaluation Committee or who are hired by the AUTHORITY to assist in the evaluation process.

C. Furthermore, each PROPOSER agrees to indemnify and hold harmless the AUTHORITY and each of their officers, employees, and agents from all costs, damages, and expenses incurred in connection with refusing to disclose any material, which the PROPOSER has designated as confidential and exempt.

D. Oral presentations, meetings where PROPOSER(S) is/are answering questions, negotiations, and AUTHORITY meetings to discuss negotiation strategy are exempt from public access in accordance with Sections 286.0113(2), Florida Statutes.

16. POSTING OF RECOMMENDATION FOR AWARD:

A. Recommendation for Award will be posted on the date of the Evaluation Committee meeting for a period of five (5) calendar days. Failure to file a protest to the Director of Purchasing Services within the time prescribed, as more fully detailed in the AUTHORITY'S Purchasing Manual, Section 10, shall constitute a waiver of protest proceedings.

B. It is the PROPOSER'S sole responsibility to ascertain the time and date of posting of the Recommendation for Award. This may be accomplished by telephone, fax, e-mail, or other means deemed timely by the PROPOSER.

C. It is understood by the PROPOSER that the Selection/Evaluation Committee makes only a recommendation which does not constitute the actual award itself. The actual award will be made by the SWA Board at a duly noticed public meeting.

D. Nothing contained in this Section shall limit or divest the SWA Board of its authority pursuant to its internal policies, AUTHORITY'S Purchasing Manual, the Special Act or general law.

17. INSURANCE:

The awarded PROPOSER(S) shall maintain insurance coverage reflecting the minimum amounts and conditions specified in the attached Sample Agreement, Attachment A. In the event the PROPOSER(S) is a governmental entity or a self-insured organization, different insurance requirements may apply. Misrepresentation of any material fact, whether intentional or not, regarding the PROPOSER(S) insurance coverage, policies or capabilities may be grounds for rejection of the proposal(s) and rescission of any ensuing agreement(s).

18. CONE OF SILENCE:

18.1 Cone of silence means a prohibition on any communication, written or oral, regarding a particular

request for proposal, request for qualification, bid, or any other competitive solicitation between:

(a) Any person, recognized legal entity, or either of their respective representative(s) seeking an award from such competitive solicitation; and
(b) any person who is a member of a selection or evaluation committee or panel whose purpose is to make selections, recommendations or evaluations in connection with a competitive selection process; and
(c) any employee of the department from which the contract solicitation originated and for whose primary purpose it will serve, any employee that is a Chief of the Solid Waste Authority of Palm Beach County regardless of the originating department; and
(d) Notwithstanding the above, any person, legal entity, or their respective representative(s), may contact any member(s) of the Authority's Governing Board, the Executive Director, Purchasing Director or Procurement Manager, however, any such communication shall only be by written correspondence, and in all cases the Purchasing Director shall be copied. Any oral communications to any of these persons(s) listed in this subsection regarding a particular competitive solicitation is strictly prohibited.

18.2 For the purposes of this section, a person or legal entity's representative shall include any person or group of persons acting on behalf of that person or legal entity, including but not limited to an employee, partner, officer, director, consultant, lobbyist, or any actual or potential subcontractor or consultant of the person or legal entity.

18.3 The Cone of Silence shall be in effect as of the deadline to submit the proposal, bid, or other response to a competitive solicitation. Each request for proposal, request for qualification, bid, or any other competitive solicitation shall provide notice of the Cone of Silence requirements and refer to this policy.

18.4 The Cone of Silence shall remain in effect for all person(s), legal entity, or their respective representative(s) submitting a response to a competitive solicitation until such time as the provisions of subsection 17.7 are satisfied, even if the person withdraws his/her submittal from the competitive process, or is otherwise eliminated from consideration consistent with the procedures of the competitive process.

18.5 The provisions of this policy shall not apply to oral communications at any proceeding, including pre-bid conferences, oral presentations before selection committees, contract negotiations during any meeting, presentations made to the board, and protest hearings. Further, the Cone of Silence shall not apply to contract negotiations between any employee and the intended awardees, or any dispute resolution process following the filing of a protest between the person filing the protest and any employee.

18.6 The Cone of Silence shall not apply to any purchase made in an amount less than the competitive bid threshold set forth in the Authority Purchasing manual.

18.7 The Cone of Silence shall terminate at the time the Board, or Authority staff, if authorized to act on behalf of the Board, awards or approves a contract, rejects all bids or responses, or otherwise takes action which ends the solicitation process.

18.8 The Board, by means of action taken at any properly noticed Governing Board meeting, may invoke the Cone of Silence earlier than the times specified in this section, for any procurement.

18.9 Any and all questions regarding the individuals who may or may not be covered under the Cone of Silence should be directed to the Purchasing Director or designee.

19. AGREEMENTS WITH OTHER GOVERNMENTAL ENTITIES:

All PROPOSERS submitting a response to this RFP agree that such response also constitutes a response to all State and local government agencies of the State of Florida under the same terms and conditions, for the same prices and for the same effective period as specified in this RFP, should the successful PROPOSER deem it in the best interest of their business to do so. The Agreement(s) resulting from this RFP in no way restricts or interferes with any State or local government agencies of the State of Florida from re-solicitation for any or all items specified in this RFP.

20. SCRUTINIZED COMPANIES:

A. As provided in F.S. 287.135, by entering into this Contract or performing any work in furtherance hereof, the CONTRACTOR certifies that it, its affiliates, suppliers, subcontractors and consultants who will perform hereunder, have not been placed on the Scrutinized Companies With Activities in Sudan List or Scrutinized Companies With Activities in The Iran Petroleum Energy Sector List created pursuant to F.S. 215.473, or is engaged in business operations in Cuba or Syria.

   If the AUTHORITY determines, using credible information available to the public, that a false certification has been submitted by CONTRACTOR, this Contract may be terminated and a civil penalty equal to the greater of $2 million or twice the amount of this Contract shall be imposed, pursuant to F.S. 287.135. Said certification may be requested at the time of Contract renewal.

B. As provided in F.S. 287.135, by entering into this Contract or performing any work in furtherance hereof, the CONTRACTOR certifies that it, its affiliates, suppliers, subcontractors and consultants who will perform hereunder, have not been placed on the Scrutinized Companies that Boycott Israel List, or is engaged in a boycott of Israel, pursuant to F.S. 215.4725.

   If the AUTHORITY determines, using credible information available to the public, that a false certification has been submitted by CONTRACTOR, this Contract may be terminated and a civil penalty equal to the greater of $2 million or twice the amount of this Contract shall be imposed, pursuant to F.S. 287.135. Said certification may be requested at the time of Contract renewal.

21. INSPECTOR GENERAL:

Palm Beach County has established the Office of the Inspector General (OIG), Ordinance No. 2009-049 which is authorized and empowered to review past, present and proposed county contracts, transactions, accounts and records. The AUTHORITY has entered into an Interlocal Agreement (ILA) for Inspector General Services. This Agreement provides for the Inspector General to provide services to the AUTHORITY in accordance with the authority, functions and powers set out in the Palm Beach County Office of Inspector General Ordinance. All parties doing business with the AUTHORITY and receiving AUTHORITY funds shall fully cooperate with the Inspector General including providing access to records relating to this Agreement. The Inspector General has the power to subpoena witnesses, administer oaths, require the production of records, and audit, investigate, monitor, and inspect the activities of the CONSULTANT, its officers, agents, employees, and lobbyists in order to ensure compliance with contract specifications and detect corruption and fraud. Failure to cooperate with the Inspector General or interference with or impeding any investigation shall be in violation of Ordinance 2009-049, and punished pursuant to Section 125.69, Florida Statutes, in the same manner as a second-degree misdemeanor.

22. COMMERCIAL NON-DISCRIMINATION POLICY:

A. Statement of Policy

It is the policy of the Authority not to enter into a contract or to be engaged in a business relationship with any business entity that has discriminated in the solicitation, selection, hiring or commercial treatment of vendors, suppliers, subcontractors or commercial customers on the basis of race, color, national origin, religion, ancestry, sex, age, marital status, familial status, sexual orientation, gender identity or expression, disability, or genetic information, or on the basis of any otherwise unlawful use of characteristics regarding the vendor's, supplier's or commercial customer's employees or owners; provided that nothing in this policy shall be construed to prohibit or limit otherwise lawful efforts to remedy the effects of discrimination that have occurred or are occurring in the relevant marketplace for Palm Beach County.

B. Policy Implementation

The EBO Office shall implement this policy by periodically conducting outreach and by distributing educational materials to the Authority's contracting and vendor community and related trade associations to advise such contractors, vendors and prospective respondents of this policy and the procedures to be followed in submitting complaints alleging violations of this policy. In addition, the Executive Director, the Office of the Chief Financial Officer, the Director of Purchasing, and the Office of the General Counsel shall ensure that the following commercial nondiscrimination clause language is set forth in, and incorporated into, all the Authority contracts that result from formal solicitations:

Every contract and subcontract shall contain a nondiscrimination clause that reads as follows:

"As a condition of entering into this agreement, the company represents and warrants that it will comply with the Authority's Commercial Nondiscrimination Policy as described under Section 6.3 of the Authority's Purchasing Manual. As part of such compliance, the company shall not discriminate on the basis of race, color, national origin, religion, ancestry, sex, age, marital status, familial status, sexual orientation, gender identity or expression, disability, or genetic information in the solicitation, selection, hiring or commercial treatment of subcontractors, vendors, suppliers, or commercial customers, nor shall the company retaliate against any person for reporting instances of such discrimination. The company understands and agrees that a material violation of this clause shall be considered a material breach of this agreement and may result in termination of this agreement, disqualification or debarment of the company from participating in Authority contracts, or other sanctions. This clause is not enforceable by or for the benefit of, and creates no obligation to, any third party."

All Formal Solicitations issued for Authority contracts shall include the following certification to be completed by the Respondent:

"The undersigned Respondent hereby certifies and agrees that the following information is correct:

In preparing its response on this project, the Respondent has considered all proposals submitted from qualified, potential Subcontractors and suppliers, and has not engaged in "discrimination" as defined in the Authority's Commercial Nondiscrimination Policy as set forth in Section 6.3 of its Purchasing Manual, to wit: discrimination in the solicitation, selection or commercial treatment of any Subcontractor, vendor, supplier or commercial customer on the basis of race, color, national origin, religion, ancestry, sex, age, marital status, familial status, sexual orientation, gender identity or expression, disability, or genetic information, or on the basis of any otherwise unlawful use of characteristics regarding the vendor's, supplier's or commercial customer's employees or owners; provided that nothing in this policy shall be construed to prohibit or limit otherwise lawful efforts to remedy the effects of discrimination that have occurred or are occurring in SWA's relevant marketplace. Without limiting the foregoing, "discrimination"

also includes retaliating against any person or other entity for reporting any incident of "discrimination." Without limiting any other provision of the solicitation for responses on this project, it is understood and agreed that, if this certification is false, such false certification will constitute grounds for the Authority to reject the response submitted by the Respondent on this project, and to terminate any contract awarded based on the response. As part of its response, the Respondent shall provide to the Authority a list of all instances within the immediate past four (4) years where there has been a final adjudicated determination in a legal or administrative proceeding in the State of Florida that the Respondent discriminated against its Subcontractors, vendors, suppliers or commercial customers, and a description of the status or resolution of that complaint, including any remedial action taken. As a condition of submitting a response to the Authority, the Respondent agrees to comply with the Authority's Commercial Nondiscrimination Policy as described under its Purchasing Manual – Economic Inclusion Policy and Procedures, Section 6.3.

23. THIRD PARTY BENEFICIARY DISCLAIMER:

It is not the intention of these RFP documents to create third party beneficiary status in any person or entity that is not a direct party to the contract awarded as a result of being the successful Proposer, and no language in these RFP documents or the contract awarded pursuant to this RFP should be construed or interpreted as creating a third-party beneficiary.

24. E-VERIFY – EMPLOYMENT ELIGIBILITY:

PROPOSER warrants and represents that it is in compliance with Section 448.095, Florida Statutes, as may be amended. No later than January 1, 2021, PROPOSER shall (1) register with and use the E-Verify System (E-Verify.gov) to electronically verify the employment eligibility of all newly hired workers; and (2) verify that all of the PROPOSER's contractors/consultants and subcontractors/subconsultants performing any duties and obligations under the resultant agreement are registered with and use the E-Verify System to electronically verify the employment eligibility of all newly hired workers. AUTHORITY shall terminate the resultant agreement if it has a good faith belief that the PROPOSER has knowingly violated Section 448.09(1), Florida Statutes as may be amended.

25. EQUAL BUSINESS OPPORTUNITY PROGRAM:

A. The Governing Board of the AUTHORITY has implemented the Economic Inclusion Policy and Procedures administered by the Equal Business Opportunity (EBO) Office to ensure that all segments of its business population, including, but not limited to small, local, minority, and women-owned businesses, have an equitable opportunity to participate in the AUTHORITY'S procurement process. Refer to Section 6.1 through 6.4 of the AUTHORITY's Purchasing Manual. The AUTHORITY's Purchasing Manual is available at https://swa.org/602/PURCHASING-MANUAL. It is the intention that the PROPOSER review and understand these provisions. In addition, program tools and solicitation incentives are hereby referred to as the Affirmative Procurement Initiatives (API).

B. Each solicitation will be evaluated to determine the appropriate API to be applied, if any. The API, if applicable, will be outlined in detail in Part III "Proposal Submission Requirements" located herein.

PART II
STATEMENT OF WORK

2.1. PROJECT DESCRIPTION AND REQUIREMENTS:

A. The AUTHORITY seeks experienced firms to remove and lawfully dispose of disaster-generated debris (other than hazardous materials and household putrescible garbage) from public property and public rights-of-way, and to setup and operate Temporary Debris Management Site(s) (TDMS) in Palm Beach County, Florida, immediately after a hurricane or other disaster.

B. The objective of this RFP and subsequent contracting activity is to secure the services of an experienced CONTRACTOR who is capable of efficiently removing large volumes of disaster-generated debris from a large area in a safe, timely and cost-effective manner and lawfully disposing of all debris. CONTRACTOR must be capable of assembling, directing, and managing a work force that can complete the debris management operations in 120 days or less. The duration of effort/completion dates of all tasks will be determined jointly by the AUTHORITY and CONTRACTOR. This determination will be set in writing in appropriate Task Order(s).

C. The CONTRACTOR shall perform all work in strict accordance with Federal Emergency Management Agency (FEMA) guidelines in order to maximize recovery of reimbursable expenses. This task shall include the provision of audit quality documentation as required by and acceptable to FEMA for all work accomplished.

D. The CONTRACTOR may be required, at the AUTHORITY'S discretion, to be under the direction of an agent of the AUTHORITY.

E. While intended to cover debris management needs in any major disaster scenario, the primary focus is on the threat of hurricane damage to Palm Beach County, Florida. The planning standards used for this project are based on the anticipated impacts of a named storm event or major flood impacting Palm Beach County, Florida. The AUTHORITY intends to enter into contingency Agreement(s) as further defined herein, to provide emergency debris removal and disposal services as required by the AUTHORITY.

2.2. INTRODUCTION:

A. The AUTHORITY'S disaster recovery planning includes considerations for removing and processing the volumes and types of debris expected to be generated by a major disaster such as a hurricane or major flood and includes procedures for disposing of that debris. The planning approach is formulated in part on the concept of strategic pre-positioning of plans and resources necessary for timely, safe, coordinated recovery operations, including removal of debris from public property and rights-of-way throughout Palm Beach County using a combination of county, municipal, and CONTRACTOR forces.

B. If activation is required, the AUTHORITY intends to activate contracts on an as-needed basis as solely determined by the AUTHORITY. The AUTHORITY intends to activate the CONTRACTORS in the order of final ranking as best meets the needs of the AUTHORITY. The AUTHORITY reserves the right in its sole and unfettered discretion, to assign/reassign any or all

CONTRACTORS at any time as may be deemed appropriate depending upon the circumstance(s), the event, or any other condition which may warrant such action.

C. The AUTHORITY envisions the need for four (4) CONTRACTORS to carry out the debris removal and disposal work throughout Palm Beach County. The CONTRACTOR must have the experience and capability to manage a major workforce with multiple subcontractors and to cover the expenses associated with a major recovery operation prior to the initial AUTHORITY payment and between subsequent payments, as well as the capacity to provide the necessary bonds and insurance. The CONTRACTOR must also have an established management team, an established network of resources to provide the necessary equipment and personnel, comprehensive debris removal, volume reduction operations plan, and demonstrable experience in major disaster recovery projects.

D. The Agreement(s) to be awarded under this RFP will be contingency Agreement(s) that will be activated only in the face of an emergency. As such, no compensation will accrue to the CONTRACTOR unless and until the Agreement is activated either in anticipation of a natural disaster or immediately after such disaster.

E. The CONTRACTOR who receives an Agreement for the work, will be required to participate in certain AUTHORITY directed disaster recovery training and/or exercises, 1 to 2 days each year, at no cost to the AUTHORITY.

F. The AUTHORITY does not guarantee a CONTRACTOR will be activated if awarded an Agreement.

2.3 PLANNING STANDARD FOR DEBRIS REMOVAL AND DISPOSAL:

The AUTHORITY'S goal is to complete the debris removal and disposal process in 120 days following the storm event. This assumes that the entire area of the county will be accessible within that period. Due to the low elevation and potential for flooding, some areas might not be accessible for several weeks after a major natural disaster. The CONTRACTOR must be aware that it might not be possible to initiate operations in all parts of the county simultaneously immediately after a storm.

2.4 DEBRIS MANAGEMENT:

A. Planning for debris management operations is a function of the AUTHORITY as a supporting agency to the Palm Beach County Department of Engineering and Public Works. The AUTHORITY'S Emergency Management Coordinator will direct the debris removal and disposal operations.

B. In addition to using AUTHORITY forces and equipment, the AUTHORITY intends to execute four (4) debris removal and disposal Agreements on a contingency basis for the purpose of having CONTRACTOR(S) immediately available and committed to assisting the AUTHORITY in the aftermath of a major disaster. Each CONTRACTOR holding a debris removal and disposal Agreement will serve as a General CONTRACTOR for the purpose of debris removal and disposal operations and will be able to use his/her own and subcontractor resources to meet the obligations of the Agreement. It is anticipated, but not required, that the CONTRACTOR will use both local and non-local subcontractors.

C. When a major disaster occurs or is imminent, the AUTHORITY intends to contact the highest two (2) or three (3) ranked CONTRACTORS holding debris removal and disposal Agreements to advise them of the AUTHORITY'S intent to activate the Agreement(s). Debris removal will generally be limited to debris in, upon, or brought to county residential private and public streets and roads, rights-of-way, municipal properties and facilities, and other public sites (this includes debris from customers assessed for residential solid waste and recycling collection services by the AUTHORITY). The CONTRACTOR will be responsible for determining the method and manner of debris removal and lawful disposal operations. Disposal of debris will be at AUTHORITY approved TDMS or landfill sites. The CONTRACTOR will be responsible for the lawful disposal of all debris and debris-reduction by-products generated at all TDMS.

D. When a major disaster occurs or is imminent, the AUTHORITY will initially send out an Alert to the selected CONTRACTOR(S). This Alert will serve to activate the lines of communication between the CONTRACTOR representatives and the AUTHORITY. Subsequently, the AUTHORITY will issue the first Task Order which will authorize the CONTRACTOR to send an Operations Manager to the AUTHORITY within 24 hours of receiving such Task Order, to begin planning for the operations and mobilizing the personnel and equipment as necessary to perform the stipulated work. This first Task Order will also direct the CONTRACTOR to execute the required Performance and Payment Bond. The CONTRACTOR should anticipate receiving this first Task Order 24 to 72 hours before projected landfall of a hurricane or major flood. Depending on the nature of the storm and circumstances, the AUTHORITY may activate more than one (1) CONTRACTOR. CONTRACTOR(S) will generally be activated in order of final ranking.

E. Specific task orders will be issued to select CONTRACTORS based on the best interest of Palm Beach County. The AUTHORITY reserves the right to assign work or task orders to various CONTRACTORS based on capability. The AUTHORITY does not guarantee a cradle to grave pricing arrangement but reserves the right to pick and choose CONTRACTORS based on ranking.

F. The general concept of debris removal operations includes multiple, scheduled passes of each site, location, or right-of-way. This will allow residents to return to their properties and bring debris to the private and public right-of-way as recovery progresses. The AUTHORITY will prescribe the specific schedule to be used after ascertaining the scope and nature of the disaster's impacts.

G. The AUTHORITY will make every effort to identify strategically located public and private TDMS throughout the county prior to a natural disaster. Depending upon the severity of the natural disaster, additional public and private TDMS will be identified as needed.

H. The CONTRACTOR will operate the public and private TDMS and only CONTRACTOR vehicles and others specifically authorized by the AUTHORITY will be allowed to use the sites. Only one (1) level of subcontractor will be allowed to operate the sites. There will be no multi-tiered subcontractors (sub of a sub) allowed to operate TDMS. The CONTRACTOR is responsible for all activity at TDMS operated by their subcontractor and must have an employee on site at all times to oversee daily operations. **The locations of both publicly and privately owned sites currently under consideration are shown on Attachment C.** Additional public and privately owned TDMS may become available as plans develop. The availability of both private and public TDMS may change during the term of the Agreement.

I. The AUTHORITY may also establish designated homeowner drop-off sites on a public right-a-way (PROW) for communities. The CONTRACTOR will be responsible for removing all eligible debris from those approved designated locations at the direction of the Emergency Management Coordinator or designee.

J. Curbside segregation of debris and disaster-generated or related wastes will be an element of the AUTHORITY'S disaster recovery program. The debris removal and disposal CONTRACTOR will be required to aid in the segregation and waste stream management processes. Any Household Hazardous Waste (HHW) encountered by the debris removal CONTRACTOR is to be set aside. HHW disposal will be the responsibility of the resident. The AUTHORITY will designate HHW drop-off locations.

K. The following items are considered HHW for the purpose of this Agreement:

1. Used Oil
2. Batteries
3. Paint
4. Aerosol spray cans
5. Pesticides
6. Antifreeze
7. Fluorescent light bulbs
8. Propane tanks (household size)

L. The CONTRACTOR will setup a lined containment area and separate any HHW inadvertently delivered to a TDMS.

M. Commercial and industrial hazardous waste such as chemicals, gas containers, transformers, and any other form of hazardous or toxic matter will be set aside for collection and disposal by a Hazardous Materials Removal and Disposal Contractor who will be selected by the AUTHORITY.

N. Putrescible residential garbage will be collected by AUTHORITY franchise waste haulers and is not to be collected or transported by CONTRACTOR forces. The AUTHORITY may enter into a separate emergency debris removal agreements with each franchise hauler to operate their dedicated self-loading collection equipment within their Service Area for FEMA eligible storm debris removal.

2.5 SCOPE OF WORK/OVERVIEW:

This section is divided into three (3) subsections:

2.5.1 Debris Removal and Disposal Operations from residential public and private streets, roads and rights-of-way and delivered to a TDMS designated by the Authority.

2.5.2 TDMS Operations which includes daily operations as well as reclamation of the site to its pre-storm condition or as directed by the AUTHORITY Emergency Management Coordinator

2.5.3 Processing, Loading and Hauling Material from TDMS to final destination.

A. Specific work authorizations by the AUTHORITY will be through written Task Orders. Task Orders will define the job to be accomplished, location of job, timeframe for completion, rates to be used, etc. Any job with requirements or rates not covered by this Proposal will be negotiated. The AUTHORITY reserves the right to extend operations on a weekly basis. Task Orders will be executed bilaterally. Performance will be by the metrics established in the Task Order(s). After 1/3 and again after 2/3 of the stipulated number of days of work in the Task Order have elapsed, the CONTRACTOR(S) shall provide written progress report to the AUTHORITY for review and acceptance. The AUTHORITY shall have the right to correct for CONTRACTOR'S default or underperformance by any means it deems in its best interest at the CONTRACTOR'S expense.

B. The CONTRACTOR shall commence mobilization immediately upon receipt of the mobilization Task Order meeting the following progress patterns: 48 hours- collection activity within assigned Collection Service Area. Within ten (10) calendar days CONTRACTOR shall have 100% of all necessary equipment operating within all Collection Service Areas. This represents a minimum response schedule and does not restrict an earlier response. Subsequently, the AUTHORITY may issue additional Task Orders to define more precisely the work to be accomplished or to authorize additional work. The CONTRACTOR shall perform in accordance with each Task Order in all designated Collection Service Areas established by the AUTHORITY. Each Task Order will be uniquely and sequentially numbered.

C. The CONTRACTOR is authorized to collect debris during daylight hours, seven (7) days per week. Any deviations from this schedule will require AUTHORITY approval.

D. The CONTRACTOR must be duly licensed to perform the work in accordance with the State of Florida statutory requirements. The CONTRACTOR shall obtain all permits necessary to complete the work. The CONTRACTOR shall be responsible for determining what permits are necessary to perform under the Agreement. Copies of all permits shall be submitted to the AUTHORITY's Director, Customer Information Services prior to issuance of the first Task Order.

E. The quantity of work required to complete the Agreement resulted from this RFP is estimated. The actual effort required may be more or less than the estimated amount shown in the Proposal Form 3 – Price Proposal. Payment will be made at the unit rates proposed. The output will be verified by the AUTHORITY's Director, Customer Services in the daily operational report. Should hourly rates be used to pay for certain equipment other than preventative maintenance, not in excess of fifteen (15) minutes in a normal workday, will be paid at the regular hourly rate. Preventative maintenance or down time resulting from equipment failure, routine maintenance and fueling that exceeds fifteen (15) minutes will be considered unacceptable work and non-payment of that time will be rounded off to the half hour of all hours where delays occur. Preventative maintenance is defined as the usual field maintenance to keep equipment in operating condition without the use of extensive shop equipment. Fueling of equipment will be considered as part of preventative maintenance.

F. The CONTRACTOR shall be responsible for correcting any notices of violations issued as a result of the CONTRACTOR'S or any subcontractor's actions or operations during the performance of this Agreement. Corrections for any such violations shall be at no additional cost to the AUTHORITY.

G. The CONTRACTOR shall conduct the work so as not to interfere with the disaster response and recovery activities of federal, state or local governments or agencies, or of any public utilities or other private contractor.

H. The CONTRACTOR shall provide contact information for all key personnel to the AUTHORITY that shall include name, phone number, cellular phone number and email address. The CONTRACTOR and its agents shall respond in a timely manner to all AUTHORITY inquiries at all times.

2.6 DEBRIS REMOVAL AND DISPOSAL OPERATIONS

2.6.1 General:

A. The purpose of this section is to define the requirements for debris removal and disposal operations after any catastrophic disaster within Palm Beach County. The AUTHORITY may designate zones for collection and disposal locations for debris collected. CONTRACTORS will be tasked with a service area(s) for this specific work immediately after the activation of the Agreement.

B. For work performed on a Time and Materials basis, all hourly equipment rates shall include the cost of the maintenance, fuel, repairs, overhead, profit, insurance, and all other costs associated with the equipment including labor and operator.

2.6.2 Services:

A. The CONTRACTOR shall provide equipment, operators, and laborers for debris removal operations. The CONTRACTOR shall provide all labor and materials necessary to fully operate and maintain (including fuel, oil, grease, and repairs) all equipment under this Agreement.

B. All rates are to include the cost of protective clothing (to include hardhats and steel-toed boots), fringe benefits, hand tools, supervision, transportation, lodging, meals, and all other costs.

C. The work shall consist of clearing and removing disaster generated debris as directed by the AUTHORITY Emergency Management Coordinator. CONTRACTOR shall provide collection equipment the day following a natural disaster or as directed by the AUTHORITY and shall provide equipment sufficient to collect a minimum of 50,000 cubic yards of debris per day within ten (10) calendar days of collection commencement (Past AUTHORITY natural disaster cleanup records show that ten (10) days' following disaster, 95,000-126,000 cubic yards of debris collected per day). Failure to provide sufficient equipment necessary to collect required amount may result in the AUTHORITY entering into a separate agreement with another contractor for collection services.

2.6.2.1 Removal of Hazardous Leaning Trees and Hanging Limbs

a) Under this contract, work shall consist of all labor, equipment, fuel, and miscellaneous costs necessary to remove all hazardous trees twelve inches (12") or greater in diameter, measured three feet (3') from the base of the tree or chest height and hanging limbs two inches (2") or greater in diameter existing in private and public right-of-way. Further, debris generated from the removal of hazardous trees and hanging limbs two inches (2") or greater existing in private and public right-of-way will be placed at the public right-of-way for removal as vegetative debris. Hazardous leaning trees less than twelve inches (12") in diameter, measured three feet (3') from the base of the tree or at chest height, will be flush cut, and placed on the public right-of-way to be removed as vegetative debris. The AUTHORITY will not compensate the CONTRACTOR for leaning trees less than twelve inches (12") in diameter on a unit rate basis.

b) Removal and transportation of hazardous trees twelve inches (12") or greater in diameter and hanging limbs two inches (2") or greater in diameter existing in private and public right-of-way will be performed as identified by the AUTHORITY. All disaster specific eligibility guidelines regarding size and diameter of leaning trees will be communicated to the CONTRACTOR, in writing, by the AUTHORITY. In order for leaning or hazardous trees to be removed and eligible for reimbursement, the tree must satisfy a minimum of one (1) of the following requirements:

   i) The tree is leaning in excess of 30° degrees in a direction that poses an immediate threat to public health, welfare, and safety.
   ii) The tree is dead, twisted, or mangled as a direct result of the storm and a certified arborist can attest to the fact that the tree will die and potentially create a falling hazard to the public.

2.6.2.2 Removal of Hazardous Stumps

a) Under this contract, work shall consist of all labor, equipment, fuel, and miscellaneous costs necessary to remove all hazardous uprooted stumps 24 inches or greater in diameter, measured 24 inches from the base of the tree existing in private and public right-of-way. Further, debris generated from the removal of uprooted stumps existing in private and public right-of-way will be placed at the public right-of-way for removal as vegetative debris. Stumps measured 24 inches from the base of the tree and less than 24 inches in diameter will be considered normal vegetative debris and removed in accordance with 3.1.2. The AUTHORITY will not compensate hazardous stumps less than 24 inches in diameter on a unit rate basis and instead will be considered normal vegetative debris. The diameter of stumps less than 24 inches will be converted into a cubic yardage volume based on the published FEMA stump conversion table (In accordance with current FEMA public assistance guidelines) and removed under the terms and conditions of 2.6.2.

b) Removal and transportation of hazardous uprooted stumps existing in the private and public right-of-way and private property will be performed as identified by the AUTHORITY. All disaster specific eligibility guidelines regarding size and diameter of hazardous stumps will be communicated to the CONTRACTOR, in writing, by the AUTHORITY. In order for hazardous stumps to be removed and eligible for reimbursement, the stump must satisfy the following requirement:

(i) Over 50% of the tree crown is damaged or broken and heartwood is exposed.
(ii) Tree stumps that are not attached to the ground will be considered normal vegetative debris and subject to removal under the terms and conditions of 2.1. The cubic yard volume of the unattached stump will be based off of the diameter conversion using the published FEMA stump conversion table (In accordance with current FEMA public assistance guidelines).

The AUTHORITY or its representative will measure and certify all stumps before removal.

2.6.2.3 Collection of Storm Generated Residential Vegetation and Construction and Demolition Debris:

a) It is the AUTHORITY'S goal to ensure that Vegetation and Construction/Demolition debris remain separate task orders for the collection of Vegetation and Construction loads. Mixing of loads by the CONTRACTOR at the road right of way will not be tolerated.

Work may include:

(i) First pass to clear debris from emergency evacuation routes, access roads to critical facilities and all primary roadways.
(ii) Clearing debris from residential private and public road right of ways.
(iii) Loading the debris.
(iv) Hauling the debris to an approved AUTHORITY TDMS or an authorized private construction demolition debris recycling facility or landfill.
(v) Dumping the debris at the TDMS or direct haul to an Authority permitted approved private Construction and Demolition Debris (C&D) recycling facility or Authority authorized landfill.

b) Debris delivered to a TDMS, private C&D recycling facility or authorized landfill will be paid based on the per cubic yard price according to the Proposal Form 3 – Price Proposal.

2.6.2.4 Hourly Rate Clearing:

a) From 0-70 hours following a disaster CONTRACTOR, as designated by the AUTHORITY, shall provide the clearing services on an hourly rate that shall include the following:

(i) Clear debris from emergency evacuation routes, access roads to critical facilities, and primary roadways.
(ii) Perform emergency removal of debris if needed for life-saving measures.
(iii) Conduct daily briefings with debris managers and other officials to update progress and discuss issues.
(iv) Develop a traffic control plan along potential haul routes and at debris management and disposal sites.

b) The CONTRACTOR shall not move from one designated Collection Zone to another area without prior approval from the AUTHORITY's Director, Customer Information Services or designee. CONTRACTORS and/or subcontractors that move to a designated Collection Service Area without prior AUTHORITY approval may be terminated immediately. The AUTHORITY reserves the right to relocate CONTRACTOR to other Collection Service Areas based on need and ability to perform required work at an acceptable level. The AUTHORITY reserves the right to immediately terminate CONTRACTOR and any subcontractor who fails to provide service in strict accordance with guidelines set forth by FEMA and the AUTHORITY.

c) The AUTHORITY or designee shall forward all claims of damage to the CONTRACTOR daily. CONTRACTOR shall provide all contact information, including name, phone number, cellular phone number, fax number and email address, for personnel responsible for resolving all claims of damage. CONTRACTOR must respond to all claims of damage within 24 hours and resolve within ten (10) calendar days. Mailboxes must be repaired or replaced within two (2) calendar days. CONTRACTOR is responsible for all damage caused by his crew and/or subcontractors in the performance of debris removal.

d) In the event the CONTRACTOR fails to repair damages as a result of the Contractor's equipment failure or negligence within the time provided in this Agreement, the AUTHORITY or designee may arrange for the repairs and assess the CONTRACTOR for the cost of the repairs and any applicable administrative charges. Any disputes as to damage responsibility will be presented to the Director, Customer Information Services or designee for review. The decision of the Director, Customer Information Services or designee will be final.

2.6.3 Equipment:

A. All trucks and equipment must be in compliance with all applicable federal, state, and local rules and regulations. Trucks used to haul debris must be capable of rapidly dumping their load without the assistance of other equipment, be equipped with a tailgate that will effectively contain the debris during transport that will permit the trucks

to be filled to capacity. Cyclone fence may be used as temporary tailgates if they comply with the following specifications:

1. Fencing must be permanently attached to one side of the truck bed.
2. After loading, the fencing must be tied to the other side of the truck bed at two places with heavy gauge wire.
3. Fencing must extend to the bottom of the bed.
4. After loading, bottom of fencing shall be tight against the bed of the truck and secured at a minimum of two locations.
5. Solid iron metal bars must be secured to both sides of the fencing.
6. There shall be no hand loaded equipment allowed.

B. The AUTHORITY or designee shall complete certifications indicating the type of vehicle, make and model, license plate number, equipment number, and measured maximum volume, in cubic yards, of the load bed of each piece of equipment utilized to haul debris. The measured volume of each piece of equipment shall be calculated from actual internal physical measurement performed and certified by the CONTRACTOR. Maximum volumes may be rounded up to the nearest cubic yard. The reported measured maximum volume of any load bed shall be the same as shown on the placards affixed to each piece of equipment. The AUTHORITY reserves the right to re-measure trucks and trailers at any time to verify reported capacity. If a truck and/or trailer are re-measured and the yardage capacity is determined to be lower, the lower yardage volume will be retroactive to the initial load and total volume adjusted accordingly.

C. All trucks and trailers utilized in hauling debris shall be equipped with a tailgate that will permit the vehicle to be loaded to capacity and effectively contain the debris on the vehicle while hauling. If installed, all sideboard extensions must remain in place throughout the operation, or the vehicle must be re-measured and remarked. All extensions to the bed are subject to acceptance or rejection at the sole discretion of the AUTHORITY or designee.

D. Trucks or equipment designated for use under this Agreement shall not be used for any other work during working hours. The CONTRACTOR shall not solicit work from private citizens or others to be performed in the designated Collection Service Area during the period of this Agreement. Under no circumstance will the CONTRACTOR mix debris hauled for others with debris hauled under this Agreement. Failure to comply will result in no payment to CONTRACTOR and the operator and vehicle will be declared ineligible to provide any additional emergency debris collection services. Any and all unapproved changes to placard will result in no payment to CONTRACTOR and the operator and vehicle will be declared ineligible to perform any additional emergency debris collection services.

2.6.4 Securing Debris

The CONTRACTOR shall be responsible for properly and adequately securing debris on each piece of equipment utilized to haul debris. Prior to leaving the loading site, the CONTRACTOR shall ensure that each load is secure and trimmed so that no debris extends horizontally beyond the bed of the equipment in any direction. All loose debris shall be reasonably compacted during loading and secured during transport. Tarps or other

coverings shall be provided by the CONTRACTOR to prevent materials from falling or being blown from the bed. Loads not properly tarped or otherwise covered will not be allowed to dispose at any AUTHORITY approved TDMS which may result in non-payment to CONTRACTOR.

2.6.5 Equipment Signage

Prior to commencing operations, the AUTHORITY or designee shall affix to each piece of equipment, signs or markings indicating the Owner Operator's name and a unique equipment identification number. One sign shall be placed on each side of the equipment. For those trucks, trailers and other equipment intended to haul debris, the maximum volume, in cubic yards, of the load bed shall also be shown. Each operator shall keep AUTHORITY certification with them at all times. Placards must remain on both sides of equipment.

2.6.6 Other Considerations

A. The CONTRACTOR shall assign and provide an Operations Manager (OM) to the AUTHORITY TDMS to serve as the principal liaison between the AUTHORITY Director, Customer Services or designee and the CONTRACTOR'S forces. The assigned OM must be knowledgeable of all facets of the CONTRACTOR'S operations and have authority in writing to commit the CONTRACTOR. The OM shall be on call 24 hours per day, seven (7) days per week and shall have electronic linkage capability for transmitting and receiving relevant contractual information and make arrangements for onsite accommodations. This linkage shall provide immediate contact via cell phone, Fax machine, and have Internet capabilities. The OM will participate in daily meetings and disaster exercises, functioning as a source to provide essential element information. The OM will report to the AUTHORITY Director, Customer Services or designee. This position will not require constant presence; rather the OM will be required to be physically capable of responding to the AUTHORITY Emergency Management Coordinator within 30 minutes of notification.

B. The CONTRACTOR shall be responsible for control of pedestrian and vehicular traffic in the work area. At a minimum, one flag person should be posted at each approach to the work area.

C. The CONTRACTOR shall supervise and direct the work, using skilled labor and proper equipment for all tasks. Safety of the CONTRACTOR'S personnel and equipment is the responsibility of the CONTRACTOR. Additionally, the CONTRACTOR shall pay for all materials, personnel, taxes, and fees necessary to perform under the terms of this contract.

D. Payment for debris hauled will be based on the quantity of debris hauled in cubic yards. Debris hauled to a TDMS will require a validated load ticket. Drivers will be given an electronic load tickets at the loading site by an AUTHORITY loading site monitor. The quantity of debris hauled will be estimated in cubic yards at the TDMS by an AUTHORITY TDMS monitor. The estimated quantity will be recorded on the electronic load ticket. The AUTHORITY TDMS monitor will retain one copy of the paper load ticket and the driver will retain the remaining copies of the load ticket. Debris being hauled to

a permanent landfill will be paid based on cubic yards recorded on an approved electronic or paper load ticket. Payment will be made against the CONTRACTOR'S invoice once site monitor and CONTRACTOR load tickets and/or scale tickets match. Load tickets not properly completed and signed will not be paid.

2.7 TEMPORARY DEBRIS MANAGEMENT SITES (TDMS) OPERATIONS

2.7.1 General

A. The purpose of this section is to define the requirements for TDMS Operations after any catastrophic disaster within Palm Beach County.

B. The CONTRACTOR shall use only TDMS designated by the AUTHORITY Emergency Management Coordinator.

C. The TDMS foreman shall direct all vehicular traffic and load drop-off operations. Different types of debris shall be kept in separate piles at the TDMS. At a minimum, one flag person shall be posted at each TDMS for traffic control and to direct unmixed loads to proper location (by debris type) to be offloaded. CONTRACTOR shall be responsible for sorting and proper placement of all loads not dumped in appropriate location which results in mixing the once separated debris at no charge to the AUTHORITY.

D. The CONTRACTOR shall begin grinding vegetative debris within five (5) calendar days of TDMS opening date and removing mulch/wood chips within ten (10) calendar days of site opening date. It is very important your plan provides specific information for the final disposal destination location of the mulch / wood chips removed from the public or private TDMS. The CONTRACTOR shall begin removal of Construction and Demolition/mixed debris from TDMS to an approved final destination within five (5) days of site opening date.

2.7.2 TDMS Services

2.7.2.1 Site Setup/Preparation and Site Closeout/Restoration Site setup/preparation and site closeout/restoration shall be compensated on a time and materials basis in accordance with the hourly rates provided in the Proposal Form 3 – Price Proposal Site set-up/preparation/closeout/restoration includes: clearing, stripping, hauling, fill placement, constructing/deconstructing processing pads, limerock or crushed concrete access roads, seeding, and any other similar activity necessary to make the site usable for its intended purposes and to return the site to its original condition. Do not include any materials in calculating the hourly rates in the Proposal Form 3 - Price Proposal. Important- Phase I TDMS Reclamation is included in the 2.0 cubic yard price. Phase I Reclamation requires the contractor to remove all debris from the TDMS including small particles mixed with soil and grading the entire area. The only site closeout cost will be removal of road base material and seeding as approved by the Authority.

2.7.2.2 TDMS Operations and Material Processing

a. TDMS operations and material processing shall be compensated in accordance with the unit prices provided in the Proposal Form 3 - Price Proposal. The CONTRACTOR shall provide equipment, operators, and laborers for TDMS operations as specified by Task Order. Unit prices provided in the Proposal Form 3 - Price Proposal, shall include all labor and materials necessary to fully operate and maintain (including fuel, oil, grease, repairs, operator, mobilization, demobilization, overhead, profit, lodging and insurance) all equipment under this Agreement. Each Inspection Tower shall be equipped with two (2) portable toilets. Toilets shall be provided immediately upon completion of tower assembly. CONTRACTOR shall provide a water truck for the purpose of applying to site surface to minimize dust. The AUTHORITY shall provide a front-load garbage container and collection service of the container at each TDMS. CONTRACTOR shall be responsible for cleaning up all trash and litter generated on the site from daily operations and depositing into the container for collection. The entrance roadway and surrounding area within ½ mile of the site's entrance shall be cleaned daily by the CONTRACTOR. All pre-storm identified sites shall be opened by the CONTRACTOR within three (3) calendar days after receiving approval from the AUTHORITY to operate the TDMS. Failure to open sites with proper equipment and necessary personnel will result in liquidated damages of $10,000 per day. All rates shall include the cost of protective clothing (to include hardhats and steel-toed boots), fringe benefits, hand tools, supervision, transportation, lodging, meals, and any other costs. The work shall consist of managing the operations of a TDMS and performing debris reduction by air curtain incineration and/or grinding of storm generated debris as directed by the AUTHORITY Emergency Management Coordinator

b. The AUTHORITY plans to use two types of TDMS.

    1. Vegetative TDMS will be devoted to the reduction of clean woody debris by either burning or grinding. The AUTHORITY expects the material to be recycled and or beneficially re-used if processed by grinding. It is important to provide a detailed plan on how this material will be recycled or beneficially reused after grinding / reduction.

    2. Depending upon the size and type of devastation the AUTHORITY may require a separate Construction & Demolition (C&D) staging area, mixed debris staging area and a separate Household Hazardous Waste staging area. The AUTHORITY requests that PROPOSER implements recycling and or reduction programs to minimize the quantity of construction debris material to be land filled.

c. Material coming into the Vegetative or C&D TDMS will be measured and paid for by the cubic yard according to the Proposal Form 3 – Price Proposal. Material removed and transported from a C&D TDMS will be measured and paid by the cubic yard according to the Proposal Form 3 – Price Proposal.

d. Locations of all TDMS will be approved by the AUTHORITY. The AUTHORITY Emergency Management Coordinator must approve site improvements before work begins and any costs, other than those in the Proposal Form 3 – Price Proposal, that might have been negotiated under a Task Order shall be documented for payment.

e. Material processed at a TDMS by either grinding or burning will be measured using cubic yards from incoming load tickets. Material entering a TDMS will be deposited in manageable piles.

2.7.3 Reporting

The CONTRACTOR shall submit a report to the AUTHORITY Emergency Management Coordinator or designee by close of business each day of the term of the Task Order. Each report shall contain, at a minimum, the following information:

1. Contractor's Name
2. Contract Number
3. Daily and cumulative hours for each piece of equipment, *if appropriate*
4. Daily and cumulative hours for personnel, by position, *if appropriate*
5. Volumes of debris handled

Failure to provide audit quality information by 5:00 p.m. of the following day of operation will subject CONTRACTOR to non-payment in each instance at the sole discretion of the AUTHORITY.

2.7.4 Other Considerations

A. The CONTRACTOR shall supervise and direct the work, using skilled labor and proper equipment for all tasks. Safety of the Contractor's personnel and equipment is the responsibility of the CONTRACTOR. Additionally, the CONTRACTOR shall pay for all materials, personnel, taxes, and fees necessary to perform under the terms of this contract.

B. The CONTRACTOR shall be responsible for control of pedestrian and vehicular traffic in the work area. In the event a TDMS must be closed due to CONTRACTOR equipment or operational failures, CONTRACTOR shall be liable for liquidated damages in the amount of $25,000.00 per day for every day the site has to remain closed.

2.7.5 Debris Clearance (for access) from Right-of-Ways and Public Property

A. The AUTHORITY provides support to Palm Beach County Government for Debris Management, including the clearance (moving debris from the middle of the road, etc.) of debris from right-of- ways and public property. Palm Beach County intends to perform debris clearance for access with its own forces or under existing contractual Agreements between the County and local firms. However, in a significant disaster, these resources may be insufficient to perform the clearance activities in a timely manner.

B. This debris clearance is to be considered supplemental and optional service. It is anticipated that debris clearance activities would be conducted, if needed, on a time and material basis using the rates in the Proposal Form 3 – Price Proposal.

2.8 PROCESSING, LOADING AND HAULING MATERIAL:

CONTRACTOR shall provide all necessary labor, material and equipment to process, load and haul wood chips from TDMS in Palm Beach County to final destination for disposal. CONTRACTOR shall provide all necessary labor, material and equipment to load and haul construction and demolition debris and/or mixed debris from TDMS as directed by the AUTHORITY. The AUTHORITY reserves the right to contract with other firms to process, load and haul wood chips and construction and/or mixed debris to a final destination as may best meet the needs of the AUTHORITY. All wood chips, construction and/or mixed debris shall be disposed of in accordance with all Local, State of Florida and Federal guidelines.

CONTRACTOR will provide detailed listing to the AUTHORITY of the following:

1. Quantity (loads and cubic yards)
2. Owner information
3. Site where mulch / reduced yard waste material generated at TDMS is disposed, to include address/GPS location.
4. AUTHORITY will determine final private or public Construction/Demolition debris disposal/recycling facility.

2.9 MISCELLANEOUS REQUIREMENTS

2.9.1 TDMS Foreman

A. The TDMS foreman must be an employee of the CONTRACTOR and is responsible for management of all operations of the site to include, traffic control, dumping operations, segregation of debris, burning, grinding, and safety.

B. The TDMS foreman will be responsible for monitoring and documenting equipment and labor time and providing the daily operational report to the AUTHORITY Director, Customer Services or designee.

2.9.2 TDMS Night Foreman

A. The TDMS night foreman must be an employee of the CONTRACTOR and is responsible for managing all night operations approved by the AUTHORITY.

B. The TDMS night foreman will be responsible for monitoring and documenting equipment and labor time and providing the daily operational report to the AUTHORITY Director, Customer Information Services or designee.

2.9.3 TDMS Management Plan

A. Once the TDMS is identified by the AUTHORITY, the CONTRACTOR will provide a Site Management Plan.

B. Three (3) copies of the plan are required. The plan shall be drawn to a scale of 1" = 50' and address the following functions:

1. Access to site
2. Site preparation -clearing, erosion control, and grading
3. Traffic control procedures
4. Safety
5. Segregation of debris
6. Location of ash disposal area, hazardous material containment area, CONTRACTOR work area, and inspection tower
7. Location of incineration operations, grinding operation (if required). Burning operations require a 100-foot clearance from the stockpile and a 1000-foot clearance from structures.
8. Specific plan including and location for the final disposal destination of the mulch/wood chips generated at the public or private TDMS.

2.9.4 Inspection Tower

The CONTRACTOR shall construct an inspection tower at each TDMS within three (3) calendar days of natural disaster. The tower shall be constructed using pressure treated wood or steel scaffold. The floor elevation of the tower shall be 10-feet above the existing ground elevation. The floor area shall be a minimum 8' by 8', constructed of 2"x 8" joists, 16" O.C. with 3/4" plywood supported by a minimum of four 6" x 6" posts. A 4-foot high wall constructed of 2" x 4" studs and ½" plywood shall protect the perimeter of the floor area. The floor area shall be covered with a roof. The roof shall provide a minimum of 6'-6" of headroom below the support beams. Steps with a handrail shall provide access to the tower. Inspection towers must provide a dry area for employees and meet all FEMA and OSHA requirements.

2.9.5 Grinding Operation

The CONTRACTOR shall have grinder(s) on site and in operation within five (5) calendar days following a natural disaster. Failure to provide sufficient grinding capacity to accommodate expected incoming volumes and allow site to operate in an efficient manner within five (5) calendar days shall result in liquidated damages of $10,000 per day. There shall be no period longer than 24 hours in which grinding activity may stop due to equipment or operational failure. Failure to provide back-up equipment within 24 hours shall result in liquidated damages of $2,000 per hour per approved hours of grinding operation per day until grinding activity resumes.

2.9.6 Household Hazardous Waste Containment Area

The CONTRACTOR shall construct a hazardous material containment area at each TDMS. The area shall be 30' x 30'. The perimeter shall be lined with hay bales and staked in place. The area shall be lined with a heavy gage plastic to provide a waterproof barrier. Additional plastic sufficient to cover the area is required to prevent rain from entering the containment area. Site run-off must be redirected from the containment area by site grading.

2.10 PERFORMANCE OF CONTRACTOR

A. It is the intent of this Agreement to ensure that the CONTRACTOR provides a timely quality level of services. To this end, all complaints received by the Emergency Management Coordinator or designee and reported to the CONTRACTOR shall be promptly resolved pursuant to the provisions of this Agreement.

B. The Emergency Management Coordinator or designee may levy administrative charges for the following infractions:

1. Failure to open pre-storm identified sites within three (3) calendar days of after being tasked by the AUTHORITY liquidated damages of $10,000 per day for each day not opened.
2. Closure of TDMS due to CONTRACTOR equipment or operational failures liquidated damages of $25,000 per day, for each day site must remain closed.

C. Failure to provide back-up grinder(s) within 24 hours of equipment breakdown liquidated damages of $2,000 per hour per approved grinding hours of operation per day.

D. CONTRACTOR may also be subject to non-payment and liquidated damages of $200 for each occurrence of the following infractions:

1. Failure to provide audit quality information by 5:00 p.m. of the following day of operation.
2. Loads not properly tarped or otherwise covered.
3. Mixing debris hauled from other sources with debris hauled under this Agreement.
4. Mixing vegetation debris with C & D material.

E. CONTRACTOR may be immediately terminated and not paid for the following:

1. Collection of any non-eligible, non-AUTHORITY approved stumps or debris.
2. Moving to another designated Collection Service Area without prior AUTHORITY approval.
3. Failure to provide service in accordance with guidelines set forth by FEMA and the AUTHORITY.
4. Soliciting work from private citizens or others to be performed in the designated Collection Service Area during the period of this Agreement.
5. Alteration of placards placed on certified trucks and/or trailers.

Any disputes regarding Performance of Contractor will be presented to the Emergency Management Coordinator or designee for review. The Emergency Management Coordinator or designee shall complete review and make determination within three (3) calendar days. Decisions of the Emergency Management Coordinator or designee shall be final.

REMAINDER OF PAGE LEFT BLANK INTENTIONALLY

PART III
PROPOSAL SUBMISSION REQUIREMENTS

3.1 PROPOSAL SUBMISSION REQUIREMENTS AND FORMAT

A. The AUTHORITY uses Negometrix, a 100% digital method of accessing and responding to solicitations. Therefore, PROPOSERS must submit their proposals via Negometrix. The AUTHORITY must receive all Proposals no later than **2:00 P.M.**, Eastern Time on the date established in *Part I, Section 5 – Procurement Schedule*. The complete Proposal package shall be submitted through Negometrix. Should the PROPOSER have any issues with any interaction with the e-Procurement system, PROPOSER is encouraged to contact the Negometrix support desk for assistance as follows: https://support-us.negometrix.com/support/solutions/articles/44000141067-negometrix-supplier-guide.

B. Marketing brochures or any other information not pertaining to this RFP shall not be included in the Proposal.

C. Proposals should demonstrate that the PROPOSER is qualified to perform the Scope of Work based upon relevant professional experience.

3.2 CONTENT:

The PROPOSER shall provide the appropriate information in accordance with the content requirements set forth in the following subsections. To allow the Evaluation Committee to more effectively review the Proposals, PROPOSERS shall provide all requested information in the order and in the format requested below.

3.2.1 Title Page

The Title Page shall include the RFP Title and Number. The page shall indicate clearly the name of the PROPOSER submitting the Proposal and the name, address, phone number, fax number and e-mail address of the PROPOSER'S designated contact person. The PROPOSER'S designated contact person is the individual who shall be the main point of contact for the AUTHORITY to communicate with regarding this procurement.

3.2.2 Table of Contents

3.2.3 General Information

PROPOSER shall provide completed Proposal Forms 1 – 7 as follows:

3.2.3.1 *Proposal Form 1 – Transmittal Letter*

PROPOSER shall submit a completed Proposal Form 1 – Transmittal Letter acknowledging, among other things, that the PROPOSER has completely reviewed, understands, and agrees to be bound by the requirements of this RFP. The Proposal Transmittal Letter shall be signed by a representative of the PROPOSER who is empowered to sign it and to commit the PROPOSER to the obligations contained in the Proposal.

3.2.3.2 *Proposal Form 2 – Proposal Bond*

PROPOSER shall submit a completed Proposal Form 2 – Proposal Bond as described in *Part I, Section 11 - Bond Requirements*.

3.2.3.3 *Proposal Form 3 –Price Proposal*

A. PROPOSER shall submit a completed Proposal Form 3 – Price Proposal. PROPOSER is required to submit prices for Part A, Part B, and Part C. However, Part A will be utilized for evaluation of the Price Proposal scoring of the RFP. Therefore, unit prices for all Items 1 through 6 in Part A must be submitted. No minimum or maximum amount of work is being promised.

B. The AUTHORITY may request explanations for any out-of-balance pricing, explanations for any pricing it deems too low or too high, and to negotiate a best and final price with the best ranked PROPOSER(S). In addition, the AUTHORITY reserves the right to request additional pricing, negotiated by hourly rate, lump sum, or not-to-exceed amount to perform services other than lobbying.

3.2.3.4 *Proposal Form 4 – Non-Collusion Affidavit*

PROPOSER shall provide a completed Proposal Form 4 – Non-Collusive Affidavit as described in *Part I, Section 13 – Non-Collusion Affidavit*.

3.2.3.5 *Proposal Form 5 – Drug-Free Workplace*

PROPOSER shall provide a completed Proposal Form 5 – Drug-Free Workplace.

3.2.3.6 *Proposal Form 6 – PROPOSER'S Qualification Statement*

PROPOSER shall provide a completed Proposal Form 6 – Proposer's Qualification Statement.

3.2.3.7 *Proposal Form 7 – Scrutinized List Certification*

PROPOSER shall provide a completed Proposal Form 7 – Scrutinized List Certification.

3.2.4 Minimum Requirements

The PROPOSER shall substantiate in its submittal that it meets or exceeds the following minimum requirements. Failure to do so may be cause for disqualification of its submittal:

A. The PROPOSER, both corporate and individual, must be fully licensed and certified for the type of work to be performed in the **State of Florida** at the time of submittal of their response to the RFP. Should the PROPOSER not be fully licensed and certified, its submittal will be rejected;

B. PROPOSER must be engaged in providing the services as outlined in this RFP;

C. PROPOSER must have a demonstrated comprehensive understanding in areas listed in this RFP. Understanding and previous experience are essential criteria in the qualifying process;

D. PROPOSER'S personnel and management to be utilized for the services described in this RFP shall be knowledgeable in their areas of expertise. The AUTHORITY reserves the right to perform investigations as may be deemed necessary to insure that competent persons will be utilized in the performance of the contract.

E. PROPOSER shall provide evidence of current levels of insurance as stipulated in the sample Agreement of this RFP.

3.2.5 Experience and Qualifications Narrative

PROPOSER shall demonstrate the following:

A. Provide a comprehensive description of all mobilizations (minimum of three) performed as a prime contractor for disaster debris services collecting and processing a minimum of 1 million cubic yards of debris collected from public right of ways. PROPOSERS unable to identify three or more mobilizations meeting the 1 million cubic yard threshold, per each mobilization, are requested to submit all relevant experience they have that documents the ability to perform the services (right of way collection and TDMS management) as requested by this RFP. No limitation exists for the period of time a PROPOSER may go back to describe the experience as requested. Do not show work performed as a sub-contractor. **(PROPOSAL FORM 6 - FORM A)**

   For each mobilization the PROPOSER is requested to identify the following:

   - Name and type of storm event
   - Date and location
   - Narrative of disaster debris services of work performed during mobilization event
   - Total value of contract for services performed
   - Number of cubic yards of debris collected by PROPOSER from public right of ways during mobilization
   - Number of cubic yards of debris handled by PROPOSER at TDMS during mobilization
   - Name, address, and telephone number of customers point of contact for reference purposes.

B. List all emergency debris removal and disposal contracts performed in the last three (3) years as a prime contractor. **(PROPOSAL FORM 6 - FORM B)**

3.2.6 General Operations Plan

PROPOSER shall provide the following:

1. At a minimum a detailed Mulch Disposal Plan. The AUTHORITY is committed to recycling and or beneficial re-use of mulch. Additional consideration will be taken for Beneficial Re-Use Plan. PROPOSER is required to provide a full description of how PROPOSER intends to dispose and or re-use one million (1,000,000) cubic yards of mulch. PROPOSER is required to address how PROPOSER intends to comply with all federal, state, and local guidelines pertaining to mulch disposal. PROPOSER is also required to submit any agreement(s) he/she currently has for the disposal and or beneficial re-use of mulch. PROPOSER is required to give a full description of their end use plan.

2. At a minimum a detailed TMDS Plan pertaining to Construction Debris (C & D) Recycling and or Reduction for estimated five hundred thousand (500,000) cubic yards. The AUTHORITY requests that PROPOSER implements a recycling and/or reduction program for C & D material to minimize amount of debris that will go to a landfill. PROPOSER is requested to address programs they will implement to facilitate recycling and or reduction of construction debris waste.

3. Resumes for the PROPOSER'S management team and all key personnel who will be assigned to the agreement to include, among other things: names, job titles, responsibilities, and applicable debris management experience.

4. Provide private TDMS available for use in Palm Beach County or close proximity. Provide letters of agreements with the owners for use of such sites. Identify the location of the sites and site

configuration. Five (5) additional points will be provided if PROPOSER submits additional private TDMS.

5. Provide description of other emergency services performed, e.g.: shelter, generators, roofing, communications, food, ice, etc.

3.2.7 Cost (Proposal Form 3):

A. The pricing structure submitted in Proposal Form 3 – Price Proposal shall be firm. However, the AUTHORITY reserves the right to negotiate a "best and final" price for each task category with the highest ranked PROPOSER(S).

B. Price Proposal will include be evaluated based on Proposal Form 3 – Part A – Volume Based Pricing for 3,000,000 Cubic Yards (CY) Debris Disaster. Proposer must provide price for all line **Item 1 through Item 6**. Failure to do so may render your Proposal as non-responsive.

C. PROPOSER is also required to submit pricing for Part B – Hourly Rates and Part C – Unit Cost Schedule as well, even though these sections will not be used to evaluate the Price Proposal of the RFP.

3.2.8 Small/Minority/Women Business Enterprise (S/M/WBE) Participation

A. The Governing Board of the AUTHORITY has implemented the Economic Inclusion Policy and Procedures administered by the Equal Business Opportunity (EBO) Program Office to ensure that all segments of its business population, including, but not limited to small, local, minority, and women-owned businesses, have an equitable opportunity to participate in the AUTHORITY'S procurement process. Refer to Section 6 of the AUTHORITY's Purchasing Manual. Small Business Enterprise (SBE) and Minority/Women Business Enterprise (M/WBE) is hereby mentioned as ("S/M/WBE") in the RFP. The PROPOSER also agrees that by submitting its response to this RFP that it constitutes an acknowledgement that it has reviewed this Section of the AUTHORITY's Purchasing Manual.

B. In accordance with Section 6.1 through 6.4 of the Purchasing Manual, Economic Inclusion Policy and Procedures, the AUTHORITY's Equal Business Opportunity (EBO) Office **has NOT applied an Affirmative Procurement Initiative (API) to this procurement. Therefore, no local S/M/WBE participation is required by this solicitation.**

C. The AUTHORITY does however encourage vendors to include Small/Minority/Women Business Enterprises (S/M/WBE) participation, whenever possible. For information on the Economic Inclusion Policy and Procedures, please contact the EBO Office at 561-640-4000 or visit www.swa.org/EBO.

3.2.9 PROPOSER'S Qualification Statement – (Proposal Form 6)

3.2.10 Scrutinized Business Certification – (Proposal Form 7)

PART IV
PROPOSAL EVALUATION AND AWARD

4.1. GENERAL:

All Proposals submitted in response to this RFP will be evaluated by the AUTHORITY'S Evaluation Committee based on the information supplied per *Part III – Proposal Submission Requirements* and utilizing criteria specified in *Part IV – Proposal Evaluation and Award*.

4.2. EVALUATION CRITERIA:

The review and analysis of the Proposals by the /Evaluation Committee will be based on the following criteria:

- Submission of a complete package including all Forms
- Experience and Qualifications
- General Operations Plan
- Price Proposal

4.3. EVALUATION METHOD:

A. Evaluation Committee members will conduct a completeness review of the Proposals. Proposals must include all requirements specified in *Part III – Proposal Submission Requirements.* Minor informalities or irregularities may be waived by the AUTHORITY. Those Proposals found to be complete, will then be ranked by individual members. At its discretion the AUTHORITY may require any PROPOSER(S) to make an oral presentation of his/her submittal. An oral presentation provides an opportunity for the PROPOSER(S) to clarify his/her submittal for the AUTHORITY. The AUTHORITY, if deemed necessary, will notify the PROPOSER(S) that an oral presentation will be scheduled which may result in a re-evaluation of proposals.

B. *Table 2 – Evaluation Criteria and Points* provide guidelines for the Evaluation Committee members for the ranking of Proposals. In each category where points are to be assigned by individual Evaluation Committee members, PROPOSERS may receive up to the maximum allowable number of points for each category. When awarding points to a proposal, the Evaluation Committee members will be encouraged to use the entire range of awardable points in each category. The total points awarded by each Evaluation Committee member to each Proposal will be tallied and ranked. The proposal with the most points will be ranked a 1; the proposal with the second most points will be ranked a 2; the proposal with the third most points will be ranked a 3, and so forth until each proposal has been awarded points and ranked accordingly. The Proposal with the lowest number 1 rankings will be ranked first overall and recommended for award of the Contract. The Evaluation Committee members will continue in this manner and provide overall rankings to each proposal until all proposals have been given an overall ranking. No points will be awarded for use of local S/M/WBE or S/M/WBE's. The use of these firms is encouraged strictly on a voluntary basis and will not be an evaluative factor in the award of the final Contract awarded pursuant to this solicitation.

Table 2 - Evaluation Criteria and Points

EVALUATION CRITERIA	POINTS
Experience and Qualifications	40[1]
General Operations Plan	40[2]
Price Proposal	20[3]
TOTAL:	**100**

Points footnotes as follows:

1. PROPOSER will receive up to 40 points if PROPOSER submits and exceeds the minimum requirements listed in *PART III, Section 3.2.5 - Experience and Qualifications Narrative and also demonstrate applicable recent experience.* Points will be deducted if these requirements are not met.

2. PROPOSER will receive up to 40 points if PROPOSER submits and exceeds the minimum requirements listed in *Part III, Section 3.2.6 – General Operations Plan*. Points will be deducted if any of these requirements are not met.

3. PROPOSER who submits the Proposal with the lowest Total Proposal Price will receive 20 points. *See example below.*

Total Proposal Price	Percentage of Available Points	Total Points
$35,000,000.00	100%	20.00
$36,000,000.00	97%	19.44
$37,000,000.00	95%	18.92
$38,000,000.00	92%	18.42
$39,000,000.00	90%	17.95
$40,000,000.00	88%	17.50
$41,000,000.00	85%	17.07
$42,000,000.00	83%	16.67
$43,000,000.00	81%	16.28
$44,000,000.00	80%	16.36
$45,000,000.00	78%	15.56

Percentage of Available Points: Lowest Submittal = 100% of Available Points
Calculation for next lowest, etc.= (Lowest Submittal/Next Lowest Submittal) x 20

4.4. AWARD:

A. The AUTHORITY anticipates, but does not guarantee, award to the PROPOSER who submits the Proposal determined by the SWA Board to be the most advantageous. The AUTHORITY anticipates awarding to the four (4) highest ranked PROPOSERS but reserves the right to award more or few Agreements if it is in the best interest of the AUTHORITY.

B. The AUTHORITY intends to enter into the Agreement negotiations with the highest ranked PROPOSER. If the AUTHORITY and the best ranked PROPOSER cannot negotiate a successful Agreement, the AUTHORITY may terminate such negotiations and begin negotiations with the next best ranked PROPOSER. No PROPOSER shall have any rights against the AUTHORITY arising from such negotiations.

C. Agreements awarded will be based on the final ranking achieved during the selection process. The number of Agreements that are activated will be based on the magnitude and complexity of the AUTHORITY'S post disaster needs. It will be in the AUTHORITY'S sole discretion how many Agreements are activated.

D. The price structure submitted in the Proposals shall be firm. However, the AUTHORITY reserves the right to negotiate a "best and final" price with the best ranked PROPOSER.

E. The Agreements will be for a term of three (3) years with option to extend for three (3) additional years under the same terms and conditions. The selected PROPOSERS will standby for much of the duration of the three (3) years and optional additional three (3) years extension, and only be called to active duty when a debris generating event occurs. This call to active duty may be repeated several times within the three (3) year and optional three (3) years extension Agreement period depending on the number of separate debris events that occur.

F. The PROPOSER understands that this RFP does not constitute an agreement or a contract with the PROPOSER. An official agreement or contract is not binding until Proposals are reviewed and accepted and a contract is awarded by the SWA Board and executed by the parties. A Sample Agreement is attached to this RFP. The AUTHORITY anticipates that the final agreement will be in substantial conformance with the Sample Agreement; nevertheless, PROPOSERS are advised that any agreement, which may result from this RFP, may deviate from the Sample Agreement.

REMAINDER OF PAGE INTENTIONALLY LEFT BLANK

PART V
PROPOSAL FORMS

The following Proposal Forms are included:

Proposal Form 1 – Transmittal Letter

Proposal Form 2 - Proposal Bond

Proposal Form 3 – Price Proposal

Proposal Form 4 – Non-Collusion Affidavit

Proposal Form 5 – Drug-Free Workplace

Proposal Form 6 – PROPOSER'S Qualification Statement – with **FORM A** and **FORM B**

Proposal Form 7 – Scrutinized List Certification

REMAINDER OF PAGE INTENTIONALLY LEFT BLANK

PROPOSAL FORM 1 – TRANSMITTAL LETTER

(To be typed on PROPOSER'S Letterhead)

[Date]

Diane LeRay CPPO, CPPB
Procurement Manager, Purchasing Services
Solid Waste Authority of Palm Beach County
7501 North Jog Road
West Palm Beach, FL 33412

Dear Ms. LeRay:

_____ (PROPOSER) hereby submits its Proposal in response to the **Request for Proposal (RFP) No.: 22-201/DL for HURRICANE/DISASTER DEBRIS REMOVAL, REDUCTION AND DISPOSAL** issued by the Solid Waste Authority of Palm Beach County (AUTHORITY) in January 2022.

As a duly authorized representative of the PROPOSER, I hereby certify, represent and warrant, on behalf of the PROPOSER team, as follows in connection with the Proposal:

1. The PROPOSER acknowledges receipt of the RFP and the following Addenda:

No.	Date
_____	_____
_____	_____

2. The submittal of the Proposal has been duly authorized by, and in all respects is binding upon, the PROPOSER.

3. All information and statements contained in the Proposal are current, correct and complete, and are made with full knowledge that the AUTHORITY will rely on such information and statements in qualifying PROPOSER.

4. The PROPOSER certifies under penalties of perjury that the RFP has been prepared and is submitted in good faith without collusion, fraud or any other action with any other person taken in restraint of free and open competition for the services contemplated by the RFP. As used in this Proposal Form, the word "person" shall mean any natural person, business, partnership, corporation, union, committee, club, or other organization, entity, or group of individuals.

5. The PROPOSER is not currently suspended or debarred from doing business with any governmental entity.

6. The PROPOSER has reviewed all of the engagements and pending engagements of the PROPOSER, and no potential exists for any conflict of interest or unfair advantage.

7. No person or selling agency has been employed or retained to solicit the award of the Agreement under an arrangement for a commission, percentage, brokerage or contingency fee or on any other success fee basis, except bona fide employees of the PROPOSER.

8. The principal contact person who will serve as the interface between the AUTHORITY and the PROPOSER for all communications is:

Name: _____

Title: _____

Mailing Address: _____

Phone: _____

Fax: _____

E-mail: _____

The PROPOSER has carefully examined all documents constituting the RFP and the addenda thereto and, being familiar with the work and the conditions affecting the work contemplated by the RFP and such addenda, offers to furnish all labor, materials, supplies, equipment, facilities and services which are necessary, proper or incidental to carry out such work as required by and in strict accordance with this RFP and the Proposal.

_____
Name of Proposer

_____
Print Name of Designated Signatory

_____
Signature

_____
Title

State of _____

County of _____

On this _____ day of _____, 20____, before me appeared _____ personally known to me to be the person described in and who executed this _____ and acknowledged that (she/he) signed the same freely and voluntarily for the uses and purposes therein described.

In witness thereof, I have hereunto set my hand and affixed my official seal the day and year last written above.

_____
Signature

Notary Public in and for the State of _____

(Affix Seal here)

_____
(Name printed)

Residing at _____

My commission expires _____

ACKNOWLEDGMENT OF CONTRACTOR, IF A PARTNERSHIP

State of _____

SS:

County of _____

On this _____ day of _____, 20_____, before me personally came and appeared _____, to me known, and known to me to be one of the members of the firm of _____ described in and who executed the foregoing instrument and he/she acknowledged to me that he/she executed the same as and for the act and deed of said firm.

_____
Notary Public
(Seal)

ACKNOWLEDGMENT OF CONTRACTOR, IF AN INDIVIDUAL

State of _____

SS:

County of _____

On this _____ day of _____, 20_____, before me personally came and appeared _____, to me known, and known to me to be the person described in and who executed the foregoing instrument and acknowledged that he/she executed the same.

_____
Notary Public
(Seal)

PROPOSAL FORM 2 – PROPOSAL BOND

KNOW ALL MEN BY THESE PRESENTS, that we, the undersigned:

_____, as Principal and
(Name of Proposer)

_____, as Surety, are
(Name of Surety)

hereby held and firmly bound unto the Solid Waste Authority of Palm Beach County, West Palm Beach, Florida, as Obligee, in the sum of:

_____

_____ Dollars ($_____) / **5% of the Performance and Payment Bond, which is in the amount of $10,000,000,** as liquidated damages for payment of which, well and truly to be made, we hereby jointly and severally bind ourselves, our heirs, executors, administrators, successors, and assigns.

The condition of this obligation is such that whereas the Principal has submitted to the Solid Waste Authority of Palm Beach County a certain Proposal attached hereto and made a part hereof, to enter into an Agreement, hereinafter referenced to as the **AGREEMENT FOR HURRICANE/DISASTER DEBRIS REMOVAL, REDUCTION, AND DISPOSAL.**

NOW THEREFORE,

a. If said Proposal shall be rejected or withdrawn as provided in the Request for Proposal or, in the alternative,

b. If said Proposal shall be accepted and the Principal shall duly execute and deliver the Agreement attached hereto and shall furnish all insurance requirements, the specified Performance and Payment Bond for the faithful performance of the Agreement and for the payment of labor and materials furnished for the performance of the Agreement,

then this obligation shall be void, otherwise it shall remain in full force and effect, it being expressly understood and agreed that the liability of the Surety for any and all claims hereunder in no event shall exceed the amount of this obligation.

The Surety, for value received, hereby agrees that the obligations of said Surety and its bond shall be in no way impaired or affected by any extensions of the time within which such Proposal may be accepted and said Surety does hereby waive notice of any such extensions.

IN WITNESS WHEREOF, the parties hereto have duly executed this bond on the _____ day of _____, 20____.

PRINCIPAL: _____

By: _____
Signature

(Seal)

WITNESS:

1. _____

2. _____

Name: _____

Title: _____

Address: _____

_____

Telephone: _____

SURETY: _____

By: _____
Signature

(Seal)

WITNESS:

1. _____

2. _____

Name: _____

Title: _____

Address: _____

_____

Telephone: _____

Surety companies executing bonds **must** appear on the Treasury Department's most current list (Circular 570 as amended) and be authorized to transact business in the State of Florida, in accordance with Florida Statute 287.0935, and be approved by the Solid Waste Authority of Palm Beach County.

PROPOSAL FORM 3 – PRICE PROPOSAL

PART A – VOLUME BASED PRICING FOR 3,000,000 CUBIC YARD (CY) DEBRIS DISASTER

ITEM/DESCRIPTION	ESTIMATED QUANTITY	UNIT	PRICE PER CY	EXTENSION
1.0 Public Property and Right of Way Collection, Loading and Hauling to a designated TDMS.				
A. Vegetation	2,500,000	CY		
B. Construction Debris / Mixed Debris	500,000	CY		
2.0 TDMS operation to include placement of monitoring towers, portable toilets, keeping on-site and adjacent roads area clean of trash and garbage, debris acceptance, pile management, and Phase I Reclamation.	3,000,000	CY		
3.0 Processing of debris through grinding and/or chipping.	2,500,000	CY		
4.0 Loading, hauling and disposing wood chips to final destination. ***(This rate includes disposal cost)***	1,000,000	CY		
5.0 Volume reduction through air curtain incineration.	2,500,000	CY		
6.0 Loading and hauling of construction debris and/or mixed debris from TDMS to a permitted C&D recycling facility or any other designated Disposal Facility. ***(This rate <u>shall not</u> include disposal cost). Based on miles from TDMS to final destination– 1 way.***				
A. 0 ≤ 20 miles	500,000	CY		
B. > 20 ≤ 50 miles	500,000	CY		
C. > 50 ≤ 100 miles	500,000	CY		
AVERAGE: (Item 6.0 A-C)				
AVERAGE: (Item 6.0 A-C) **X 500,000** CY **=**				$
TOTAL PROPOSAL PRICE: (Items 1.0 - 4.0; 6.0)				$

PROPOSER MUST PROVIDE PRICE FOR ALL LINE ITEMS 1 THRU 6. FAILURE TO DO SO MAY RENDER YOUR PROPOSAL TO BE DEEMED NON-RESPONSIVE.

Unit Prices, unless otherwise indicated, shall include all labor (operators, laborers, supervisors) and materials including but not limited to: supplies, equipment maintenance, repairs, repair parts, fuels, lubricants, cellular phones, transportation, and housing, if required, necessary to accomplish the project. The quantities and distributions are estimated for the purpose of making an award. Locations of sites, debris quantities, destinations, material densities, etc. may differ substantially in an actual disaster.

Assumptions: 3,000,000 cubic yards of debris consisting of 2,500,000 cubic yards of vegetation debris and 500,000 cubic yards of mixed debris.

PROPOSAL FORM 3 – PRICE PROPOSAL

PART B – HOURLY RATES

TDMS SET-UP AND CLOSURE AND DEBRIS CLEARANCE FOR ACCESS - OPTIONAL USE BY COUNTY AND OTHER GOVERNMENTAL ENTITIES			
EQUIPMENT AND LABOR RATES			
EQUIPMENT TYPE	**HOURLY EQUIPMENT RATE**	**HOURLY LABOR RATE**	**TOTAL HOURLY RATE**
Bobcat Loader			
Crew Foreman w/ Cell Phone and Pickup			
Dozer, Tracked, D5 or similar			
Dozer, Tracked, D6 or similar			
Dozer, Tracked, D7 or similar			
Dozer, Tracked, D8 or similar			
Dump Truck, 18 CY-20 CY			
Dump Truck, 21CY-30 CY			
Generator and Lighting			
Grader w/ 12' Blade			
Hydraulic Excavator, 1.5 CY			
Hydraulic Excavator, 2.5 CY			
Knuckleboom Loader			
Laborer w/ Chain Saw			
Laborer w/ small tools, traffic control, flag person			
Lowboy Trailer w/ Tractor			
Operations Manager w/ Cell Phone and Pickup			
Pickup Truck, .5 Ton			
Soil Compactor 81 HP+			
Soil Compactor to 80 HP			
Soil Compactor, Towed Unit			
Truck, Flatbed			
Tub Grinder, 800 to 1,000 HP			
Water Truck			
Wheel Loader, 2.5 CY, 950 or similar			
Wheel Loader, 3.5-4.0 CY, 966 or similar			
Wheel Loader, 4.5 CY, 980 or similar			
Wheel Loader-Backhoe, 1.0-1.5 CY			
Other – Please List			

Attach additional sheet with equipment type and labor rates, if needed

PROPOSAL FORM 3 – PRICE PROPOSAL

PART C – UNIT COST SCHEDULE

ITEM	HAZARDOUS STUMP REMOVAL, HAULING, AND DISPOSAL	UNIT	UNIT COST
1.	24-inch diameter to 48.99-inch diameter	Stump	
2.	49-inch diameter and greater	Stump	
3.	Stump Fill Dirt – Fill dirt for stump holes after removal	CY	
	HAZARDOUS HANGING LIMBS (HANGERS), AND HAULING To include removal of all hanging limbs. Limbs to be cut and placed on the right of way for collection as vegetative debris.		
4.	2-inch diameter and greater	Tree	
	HAZARDOUS TREE REMOVAL, AND HAULING Trees to be flush cut at ground level and placed on the right of way for removal as vegetative debris.		
5.	6-inch diameter to 12.99-inch diameter	Tree	
6.	13-inch diameter to 24.99-inch diameter	Tree	
7.	25-inch diameter to 48.99-inch diameter	Tree	
8.	49-inch diameter and greater	Tree	

NOTE:
The following is information only and will NOT be considered in the evaluation of this RFP

The AUTHORITY reserves the right to use this contract to handle small quantities of debris removal and as support for our Franchise Contracts as needed. Below is a daily rate to remove debris. The AUTHORITY will pay for the disposal cost. There is no requirement to provide a rate, however if you do, we expect your company to honor this special service and respond within 48 hours at the rate below.

COLLECTION SERVICE ONLY	
EQUIPMENT	DAILY RATE (10 HRS/DAY)
Knuckleboom Loader and Operator	$

PROPOSAL FORM 4 – NON-COLLUSION AFFIDAVIT

State of _____

County of _____

Being duly sworn deposes and says:

That she/he is an officer of the parties making the foregoing Proposal, that such Proposal is genuine and not collusive or sham; that said PROPOSER has not colluded, conspired, connived or agreed, directly or indirectly with any PROPOSER or person, to put in a sham bid or to refrain from bidding and has not in any manner, directly, or indirectly, sought by agreement or collusion or communication or conference with any person, to fix the price or affiant or any other PROPOSER, or to fix any overhead, profit or cost element of said price, or that of any other PROPOSER, or to secure any advantage against the AUTHORITY, or any person interested in the proposed contract and that all statements in said Proposal are true.

_____
Name of Proposer

_____
Print Name of Designated Signatory

_____
Signature

_____
Title

On this _____ day of _____, 20____, before me appeared _____ personally known to me to be the person described in and who executed this _____ and acknowledged that (she/he) signed the same freely and voluntarily for the uses and purposes therein described.

In witness thereof, I have hereunto set my hand and affixed my official seal the day and year last written above.

_____
Signature

Notary Public in and for the State of _____

(Affix Seal here)

_____
(Name printed)

Residing at _____

My commission expires _____

PROPOSAL FORM 5 – DRUG-FREE WORKPLACE

The undersigned vendor in accordance with Florida Statute 287.087 hereby certifies that _____ does:

(Name of Business)

1. Publish a statement notifying employees that the unlawful manufacture, distribution, dispensing, possession, or use of a controlled substance is prohibited in the workplace and specifying the actions that will be taken against employees for violations of such prohibition.

2. Inform employees about the dangers of drug abuse in the workplace, the business's policy of maintaining a drug-free workplace, any available drug counseling, rehabilitation, and employee assistance programs, and the penalties that may be imposed upon employees for drug abuse violations.

3. Give each employee engaged in providing the commodities or contractual services that are under bid a copy of the statement specified in subsection (1).

4. In the statement specified in subsection (1), notify the employees that, as a condition of working on the commodities or contractual services that are under bid, the employee will abide by the terms of the statement and will notify the employer of any conviction of, or plea of guilty or nolo contendere to, any violation of Chapter 893 or of any controlled substance law of the United State or any state, for a violation occurring in the workplace no later than five (5) days after such conviction.

5. Impose a sanction on, or require the satisfactory participation in a drug abuse assistance or rehabilitation program if such is available in the employee's community, by any employee who is so convicted.

6. Make a good faith effort to continue to maintain a drug-free workplace through implementation of this section.

As the person authorized to sign the statement, I certify that this firm complies fully with the above requirements.

_____
Print Name of Designated Signatory

_____
Signature

_____
Date

PROPOSAL FORM 6 - PROPOSER'S QUALIFICATION STATEMENT

The undersigned certifies under oath the truth and correctness of all statements and of all answers to questions made hereinafter:

SUBMITTED TO: **SOLID WASTE AUTHORITY OF PALM BEACH COUNTY**
PURCHASING SERVICES DEPARTMENT
7501 N. Jog Road
West Palm Beach, FL. 33412

Submitted by:

Name: _____

Address:_____

City, State, Zip: _____

Federal Identification Number (FID) _____

Check One	
Corporation:	☐
Partnership:	☐
Individual:	☐
Other*	☐

(* if other is being checked, please provide supporting documentation to validate the legality of the Firm)

1. State the true, exact, correct, and complete name of the partnership, trade or fictitious name under which you do business and the address of the place of business.

   The correct name of the PROPOSER is:

   _____

   The address of the principal place of business is:

   _____

   _____

2. If PROPOSER is corporation, answer the following:

   a. Date of Incorporation: _____
   b. State of Incorporation: _____
   c. President's name: _____
   d. Vice President's name: _____
   e. Secretary's name: _____
   f. Treasurer's name: _____
   g. Name and Address of Resident Agent: _____
      _____

3. If PROPOSER is an individual or a partnership, answer the following:

   a. Date of organization: _____
   b. Name, address, and ownership units of all partners:
      _____
      _____
      _____
   c. State whether general or limited partnership: _____

4. If PROPOSER is other than an individual, corporation or partnership, describe the organization and give the name and address of principals:

_____
_____
_____

5. If PROPOSER is operating under a fictitious name, submit evidence of compliance with the Florida Fictitious Name Statute.

_____

6. How many years has your organization been in business under its present business name? _____

Under what other former names has your organization operated?

_____
_____
_____

7. Indicate registration, license numbers or certificate numbers for the businesses or professions, which are the subject of this RFP solicitation. Please attach certificate of competency and/or state registration.

_____
_____
_____

8. Provide a narrative of Firm's Safety Program, Quality Assurance/Quality Control Management methods.

_____
_____
_____

9. PROPOSER shall provide **FORM A** and **FORM B** attached to this Proposers Qualification Statement in response to Experience and Qualifications as per Part III – PROPOSAL SUBMISSION REQUIREMENTS. **FORMS A & B** are attached: YES ☐ NO ☐

10. List and describe all bankruptcy petitions (voluntary or involuntary) which have been filed by or against the PROPOSER, its parent or subsidiaries or predecessor organizations during the past five (5) years. Include in the description, the disposition of each such petition.

_____
_____
_____
_____

11. A list of all enforcement actions against the facility for the last three (3) years including any consent orders entered, notices of violations received, and any judgments against the facility. Also, list the amount of any fines, penalties, or judgments, or other infractions in which the destination facility or facilities have received in the most current three (3) years of operation.

_____
_____
_____
_____
_____

12. List and describe any disciplinary action, administrative proceeding, malpractice claim or other like proceeding against your Firm or any of its lawyers, whether current or pending, as well as any such action, proceeding or claim occurring during the last five (5) years.

_____

_____

_____

_____

13. Has the PROPOSER, its principals, officers, or predecessors' organization(s) been CONVICTED of a Public Entity Crime, debarred, or suspended from bidding by any governmental entity during the last five (5) years? If so, provide details.

_____

_____

_____

_____

14. Has the PROPOSER in the past four (4) years, been rendered a final adjudicated determination in a legal or administrative proceeding in the State of Florida that the PROPOSER discriminated against its subcontractors, vendors, suppliers, or commercial customers? If yes, PROPOSER shall provide a list of all instances to include but not limited to; description of the status or resolution of the complaint, including any remedial action taken. (Attach additional sheets as necessary)

_____

_____

_____

_____

The PROPOSER acknowledges and understands that the information contained in response to this Qualifications' Statement shall be relied upon by the Solid Waste Authority of Palm Beach County (AUTHORITY), in awarding the contract and such information is warranted by PROPOSER to be true. The discovery of any omission or misstatement that materially affects the PROPOSER's qualifications to perform under the contract shall cause the AUTHORITY to reject the proposal, and if after the award, to cancel and terminate the award and/or contract.

(Signed): _____

(Printed Name): _____

(Title): _____

FORM A

COLLECTION and/or TDMS OPERATING

Experience as a Prime Contractor ONLY

List all activations for which your company collected and/or processed greater than 1 million cubic yards of debris.

Disaster Name	Date	Location	Services Provided	Contract Amount	TTL CY Collected or Processed	Contact Name, Address, Phone #

FORM B

DEBRIS REMOVAL, DEBRIS SITE OPERATIONS/PROCESSING, and FINAL DISPOSAL DESTINATION

Experience as a Prime Contractor ONLY

List all activations for which your company performed as the Prime Contractor for the past three (3) years (commencing 11/2018)

Disaster Name	Date	Location	Services Provided (Please circle selection)	Contract Amount	TTL CY Collected or Processed	Contact Name, Address, Phone #
			A B C			
			A B C			
			A B C			
			A B C			
			A B C			
			A B C			
			A B C			
			A B C			
			A B C			
			A B C			
			A B C			

Please use the following key for Services Provided: **A=Debris Removal**; **B=Debris Site Operations/Processing**; **C=Final Disposal Destination**.
List all letters that are applicable for each activation listed.

CERTIFICATION PURSUANT TO FLORIDA STATUTE §215.4725

HURRICANE/DISASTER DEBRIS REMOVAL, REDUCTION AND DISPOSAL

RFP NO.: 22-201/DL

I, _____, on behalf of _____,
Print Name Name of Business

certifies that _____ does not:
Name of Business

1. Participate in a boycott of Israel; and
2. Is not on the Scrutinized Companies that Boycott Israel list; and
3. Is not on the Scrutinized Companies with Activities in Sudan List; and
4. Is not on the Scrutinized Companies with Activities in the Iran Petroleum Energy Sector List; and
5. Has not engaged in business operations in Cuba or Syria.

As the person authorized to sign the statement, I certify that this Firm complies fully with the above requirements.

_____ _____
PROPOSER'S SIGNATURE DATE

PART VI
ATTACHMENTS

The following Attachments are included:

Attachment A – Sample Contract Agreement

Attachment B – Task Order Disaster Debris Management

Attachment C – Pre-Approved Temporary Debris Management Sites Map

Attachment D – Public Assistance Program and Policy Guide

Attachment E – Mobilization Schedule

Attachment F – FHWA Form 1273

Attachment G – Buy America Requirements

Attachment H – Performance and Payment Bond

YOUR PARTNER FOR
SOLID WASTE SOLUTIONS

ATTACHMENT A

SAMPLE AGREEMENT FOR

_____ SERVICES

BETWEEN

SOLID WASTE AUTHORITY OF PALM BEACH COUNTY

AND

(NAME OF CONSULTANT)

AGREEMENT NO. 22-XXX

SOLID WASTE AUTHORITY OF PALM BEACH COUNTY
7501 NORTH JOG ROAD
WEST PALM BEACH, FLORIDA 33412
(561) 640-4000

TABLE OF CONTENTS

ARTICLE		PAGE
1.	Effective Date and Incorporation of Recitals	1
2.	Services to be performed by Contractor	1
3.	Compensation	1
4.	Insurance	2
5.	Standard of Care	3
6.	Indemnification	3
7.	Independent Contractor	3
8.	Authority to Conduct Business	4
9.	Compliance with Laws	4
10.	Sub-Contractor	4
11.	Federal and State Taxes	4
12.	Availability of Funds	4
13.	Authority's Responsibilities	4
14.	Default	4
15.	Termination for Convenience	5
16.	Uncontrollable Forces	5
17.	Jurisdiction, Venue, Waiver of Jury Trial and Remedies	5
18.	Commercial Non-Discrimination Policy	6
19.	Waiver	6
20.	Severability	6
21.	Entirety of Agreement and Modification	6
22.	Successors and Assigns	7
23.	Contingent Fees	7
24.	Truth-in-Negotiation Certificate	7
25.	Ownership of Documents	7
26.	Public Records, Access and Audits	7
27.	Inspector General	9
28.	Notice	9
29.	Contract Administration	10
30.	Key Personnel	10
31.	Equal Business Opportunity Program	10
32.	Scrutinized Companies	10
33.	Agreements with other Governmental Entities	11
34.	Third Party Beneficiary Disclaimer	11
35.	E-Verify – Employment Eligibility	11
36.	Confidentiality	11
37.	Payment Adjustment Schedule	12
38.	Order of Agreement Activation/Location Assignment	13
39.	Task Order/Performance	13
40.	Bonds	13
41.	Florida Highway Administration (FHWA) Form 1273	14
42.	Buy America Requirements	14
43.	Disadvantaged Business Enterprises	14
44.	Certification Regarding Suspension and Debarment	15
45.	Access to Records and Their Retention	15
46.	Audit Requirements	15
47.	National Environmental Policy Act (NEPA)	16

48. Americans with Disabilities Act 16
49. Compliance with Title VI, Title VII and other Federal Laws and Regulations 16
50. Convict Labor Prohibition 16
51. Certification Regarding Lobbying Activities 16
52. DHS Seal, Logo, and Flags 16
53. No Obligation by Federal Government 16
54. Program Fraud and False or Fraudulent Statement or Related Acts 16
Contract Execution 17

EXHIBITS

A. Scope of Work 18
B. Fee Schedule 19

ATTACHMENTS

A. Sample Contract Agreement
B. Task Order Disaster Debris Management 20
C. Pre-Approved Temporary Debris Management Sites Map 21
D. Public Assistance Program and Policy Guide 22
E. Mobilization Schedule 23
F. FHWA Form 1273 24
G. Buy America Requirements 36
H. Performance and Payment Bond 37

AGREEMENT FOR PROFESSIONAL SERVICES

This Agreement is made and entered into as of _____, 2022, (hereinafter referred to as the Agreement) by and between **Solid Waste Authority of Palm Beach County**, a dependent special district created by Chapter 2001-331, Laws of Florida, as amended, (hereinafter referred to as AUTHORITY) and **NAME OF CONTRACTOR** (hereinafter referred to as CONTRACTOR), a Corporation, whose Federal Employer ID Number is _____;

Whereas, in accordance with the AUTHORITY's Request for Proposals No. 22-XXX/XX, solicited to employ the services of the CONTRACTOR for the purpose of providing _____ Services, and;

Whereas, CONTRACTOR represents it is capable and prepared to provide such services.

Now, therefore, in consideration of the promises contained herein and other good and valuable consideration, the receipt of which is acknowledged by the other, the parties hereto agree as follows:

ARTICLE 1 - EFFECTIVE DATE AND INCORPORATION OF RECITALS

The foregoing recitals are hereby incorporated herein by reference.

1.1 The Effective Date of this Agreement shall be **(MONTH)(DAY) _____, 2022** and the Initial Term of this Agreement is for three (3) years and shall expire on **(MONTH)(DAY) _____, 2025,** unless terminated earlier as provided for herein.

1.2 The AUTHORITY shall have the option of extending this Agreement for three (3) additional years, as approved by the AUTHORITY's Board or designee, in its sole and unfettered discretion, on the same terms and conditions. Such extension shall be in the form of a written Amendment to the Agreement executed by both parties.

1.3 The continuance of this Agreement from year-to-year is contingent upon successful annual recertification of the CONTRACTOR's capabilities. The recertification process will be a review of the fiscal (bankruptcy, etc.), logistical (equipment availability, etc.), and moral (conviction for environmental crime, conviction for crime against a public entity, etc.) responsibility of the CONTRACTOR and a determination by the AUTHORITY, based on this review, of whether or not the CONTRACTOR continues to be a viable firm to provide the services described in this Contract.

ARTICLE 2 - SERVICES TO BE PERFORMED BY CONTRACTOR

CONTRACTOR shall perform the services as specifically stated in the Scope of Work, attached hereto and made a part hereof as Exhibit A, and/or as may be specifically designated and authorized by the AUTHORITY. Such authorizations will be referred to as Task Orders. Each Task Order shall set forth a specific scope of services, rate/amount of compensation, completion date, and other pertinent details of the task being authorized. The AUTHORITY, by virtue of this Agreement, gives the CONTRACTOR no guarantee of any work/services or any specific amount of work/services that may be accomplished during the period this Agreement is in full force and effect.

ARTICLE 3 - COMPENSATION

3.1 The AUTHORITY shall pay CONTRACTOR in accordance with the Fee Schedule, attached hereto and made a part hereof as Exhibit B. In addition, the parties may negotiate a lump sum or not-to-exceed amount on a per-project basis on an individual Task Order.

3.2 The CONTRACTOR shall submit semi-monthly invoices for services rendered. All invoices must reference the Task Order number. Invoices shall include a statement of progress and appropriate audit quality detail to satisfy the Federal Emergency Management Agency (FEMA) requirements.

.

3.3 Payment of CONTRACTOR by AUTHORITY is not contingent upon the AUTHORITY being reimbursed by the Federal Emergency Management Agency (FEMA). Payment to CONTRACTOR will be made for any work directed by the AUTHORITY which is determined by Federal and State agencies to be ineligible for reimbursement.

3.4 Payment of invoices shall be within thirty (30) days after receipt of a correct, fully documented invoice. All invoices shall be delivered to:

Solid Waste Authority of Palm Beach County
7501 North Jog Road
West Palm Beach, Florida 33412
Attn: Accounts Payable

3.5 CONTRACTOR will clearly mark its final/last billing with the words "Final Invoice". This will certify that all services have been fully performed under this Agreement and that all charges and costs have been invoiced to the AUTHORITY. Thereupon, this account will be closed and any additional charges or costs, not included in the Final Invoice, shall be waived by CONTRACTOR. The AUTHORITY shall not be liable for the payment of any such additional charges or costs not included in the Final Invoice.

3.6 The AUTHORITY will retain 5% of the payment under each Task Order until such time as the entire project is completed to the AUTHORITY's satisfaction and all subcontractors and any material suppliers verify that they have been paid.

ARTICLE 4 - INSURANCE

4.1 During the performance of the Services under this Agreement, CONTRACTOR shall maintain the following insurance policies written by an insurance company authorized to do business in Florida and acceptable to the AUTHORITY.

1. **General Liability** Insurance with bodily injury limits of not less than $1,000,000 for each occurrence, and with property damage limits of not less than $1,000,000 for each occurrence.

2. **Automobile Liability** Insurance with bodily injury limits of not less than $5,000,000 for each person and not less than $5,000,000 for each accident and with property damage limits of not less than $5,000,000 for each accident.

3. **Workers' Compensation** Insurance in accordance with statutory requirements and Employer's Liability Insurance with limits of not less than $500,000 for each accident, $500,000 for each disease, and $500,000 aggregate.

4. **Excess Liability** Insurance with limits of not less than $10,000,000 for each occurrence and annual aggregate.

4.2 Deductible amounts shall not exceed 5% of the total amount of required insurance in each category. Should any policy contain any unusual exclusions, said exclusions shall be so indicated on the certificate(s) of insurance.

4.3 CONTRACTOR shall furnish AUTHORITY **Certificates of Insurance**, which shall include a provision that policy cancellation, non-renewal or reduction of coverage will not be effective until at least **thirty (30) days** after written notice has been given to the AUTHORITY. CONTRACTOR shall include AUTHORITY as an

Additional Insured on the General Liability and Automobile Liability insurance policy required by this Agreement. All of CONTRACTOR'S subcontractors shall be required to include AUTHORITY and CONTRACTOR as **Additional Insureds** on all of their liability insurance policies.

4.4 CONTRACTOR shall ensure that CONTRACTOR's naming of the AUTHORITY as an additional insured on its General Liability and Automobile Liability insurance policies pursuant to this Agreement shall afford coverage for the negligent, reckless, intentionally wrongful or willful acts of CONTRACTOR and other persons employed or utilized by the CONTRACTOR in the performance of this Agreement.

4.5 In the event that subcontractors used by the CONTRACTOR do not have insurance, or do not meet the required insurance limits herein, CONTRACTOR shall indemnify and hold harmless the AUTHORITY for any claim(s) in excess of the subcontractor's insurance coverage.

4.6 The CONTRACTOR shall not commence work under this Agreement until all insurance required as stated herein has been obtained and such insurance has been approved by the AUTHORITY.

ARTICLE 5 - STANDARD OF CARE

5.1 The CONTRACTOR shall exercise the same degree of care, skill, and diligence in the performance of the Services performed pursuant to this Agreement as is ordinarily provided by comparable, qualified professionals under similar circumstances. The CONTRACTOR shall, at no additional cost to AUTHORITY, re-perform services which fail to satisfy the foregoing standard of care.

5.2 The CONTRACTOR warrants that all services shall be performed by skilled and competent personnel to the highest professional standards in the field.

ARTICLE 6 - INDEMNIFICATION

6.1 GENERAL

Having considered the risks and potential liabilities that may exist during the performance of the services and in consideration of the promises included herein, AUTHORITY and CONTRACTOR agree to allocate such liabilities in accordance with this Article 6.

6.2 INDEMNIFICATION

The CONTRACTOR shall indemnify and hold harmless the AUTHORITY, and its officers and employees, from all liabilities, damages, losses, and costs, including, but not limited to, reasonable attorney's fees, to the extent caused by the negligence, recklessness, or intentionally wrongful conduct of the CONTRACTOR and other persons employed or utilized by the CONTRACTOR in the performance of the Agreement.

6.3 SURVIVAL

Upon completion of all services, obligations and duties provided for in this Agreement, or in the event of termination of this Agreement for any reason, the terms and conditions of this Article shall survive.

ARTICLE 7 - INDEPENDENT CONTRACTOR

7.1 The CONTRACTOR is, and shall be, in the performance of all work services and activities performed under this Agreement, an Independent Contractor, and not an employee, agent, or servant of the AUTHORITY. All persons engaged in any of the work or services performed pursuant to this Agreement shall at all times, and in all places, be subject to the CONTRACTOR'S sole direction, supervision, and control. The CONTRACTOR shall exercise control over the means and manner in which it and its employees perform the work, and in all respects the CONTRACTOR'S relationship and the relationship of its employees to the AUTHORITY shall be that of an Independent Contractor and not as employees or agents of the AUTHORITY.

7.2 The CONTRACTOR does not have the power or authority to bind the AUTHORITY in any promise, agreement or representation other than specifically provided for in this Agreement.

ARTICLE 8 - AUTHORITY TO CONDUCT BUSINESS

The CONTRACTOR hereby represents and warrants that it has and will continue to maintain all licenses and approvals required to conduct its business and perform all requirements in this Agreement.

ARTICLE 9 - COMPLIANCE WITH LAWS

In performance of the Services, the CONTRACTOR will comply with applicable regulatory requirements including federal, state, special district, and local laws, rules, regulations, orders, codes, criteria, and standards.

ARTICLE 10 - SUB-CONTRACTING

10.1 The AUTHORITY reserves the right, in its sole and unfettered discretion, to accept the use of a subcontractor or to reject the selection of a particular subcontractor under this Agreement.

10.2 If a subcontractor fails to perform or make progress, as required by this Agreement, and it is necessary to replace the subcontractor to complete the work in a timely fashion, the CONTRACTOR shall promptly do so, subject to acceptance of the new subcontractor by the AUTHORITY.

ARTICLE 11 - FEDERAL AND STATE TAXES

The AUTHORITY is exempt from Federal Tax and State Sales and Use Taxes. Upon request, the AUTHORITY will provide an exemption certificate to CONTRACTOR. The CONTRACTOR shall not be exempted from paying sales tax to its suppliers for materials to fulfill contractual obligations with the AUTHORITY, nor shall the CONTRACTOR be authorized to use the AUTHORITY'S Tax Exemption Number in securing such materials.

ARTICLE 12 - AVAILABILITY OF FUNDS

The obligations of the AUTHORITY under this Agreement are subject to the availability of funds lawfully appropriated for its purpose by the Board of the Solid Waste Authority of Palm Beach County.

ARTICLE 13 - AUTHORITY'S RESPONSIBILITIES

AUTHORITY shall be responsible for providing access to all project sites, and providing information on hand required by CONTRACTOR, including existing reports, studies, financial information, and other required data that are available in the files of the AUTHORITY.

ARTICLE 14 - DEFAULT

14.1 The AUTHORITY may, by written notice of default to the CONTRACTOR, terminate the Agreement in whole or in part if the CONTRACTOR: a) fails to satisfactorily perform any provisions of this Agreement; or b) fails to make progress so as to endanger performance under the terms and conditions of this Agreement; or c) repeatedly fails to perform; or d) does not remedy any such failure within a period of ten (10) days (or such period as the Director of Purchasing Services may authorize in writing) after receipt of notice from the Director of Purchasing Services specifying such failure. In the event the AUTHORITY terminates this Agreement in whole or in part because of default of the CONTRACTOR, the AUTHORITY may, in its sole and unfettered discretion, procure goods and/or services similar to those required under this Agreement and the CONTRACTOR shall be liable for any excess costs incurred due to this action.

14.2 If it is determined that the CONTRACTOR was not in default or that the default was excusable (e.g., failure due to causes beyond the control of, or without the fault or negligence of the CONTRACTOR), the rights and obligations of the parties shall be those provided in Article 15 – Termination for Convenience.

ARTICLE 15 – TERMINATION FOR CONVENIENCE

15.1 The Director of Purchasing Services may, whenever the interests of the AUTHORITY so require, terminate this Agreement, in whole or in part, for the convenience of the AUTHORITY. The Director of Purchasing Services shall give five (5) business days prior written Notice of Termination to the CONTRACTOR, specifying the portions of the Agreement to be terminated and when the termination is to become effective. If only portions of the Agreement are terminated, the CONTRACTOR has the right to withdraw, without adverse action by the AUTHORITY, from the entire Agreement.

15.2 Unless directed differently in the Notice of Termination, the CONTRACTOR shall incur no further obligations in connection with the terminated work and shall stop work to the extent specified on the date given in the Notice of Termination. Additionally, unless directed differently, the CONTRACTOR shall terminate outstanding orders and/or subcontracts related to the terminated work.

15.3 Unless the CONTRACTOR is in breach of this Agreement, the CONTRACTOR shall be paid for services rendered to the AUTHORITY'S satisfaction through the date of termination.

ARTICLE 16 - UNCONTROLLABLE FORCES

16.1 Neither the AUTHORITY nor CONTRACTOR shall be considered to be in default of this Agreement if delays in or failure of performance shall be due to Uncontrollable Forces, the effect of which, by the exercise of reasonable diligence, the non-performing party could not avoid. The term "Uncontrollable Forces" shall mean any event which results in the prevention or delay of performance by a party of its obligations under this Agreement and which is beyond the reasonable control of the nonperforming party. It includes, but is not limited to fire, flood, earthquakes, storms, lightning, epidemic, pandemic, war, riot, civil disturbance, sabotage, and governmental actions.

16.2 Neither party shall, however, be excused from performance if nonperformance is due to forces which are preventable, removable, or remediable and which the nonperforming party could have, with the exercise of reasonable diligence, prevented, removed or remedied with reasonable dispatch. The non-performing party shall, within a reasonable time of being prevented or delayed from performance by an uncontrollable force, give written notice to the other party describing the circumstances and uncontrollable forces preventing continued performance of the obligations of this Agreement.

ARTICLE 17 – JURISDICTION, VENUE, WAIVER OF JURY TRIAL AND REMEDIES

This Agreement shall be governed by the laws of the State of Florida. Any and all legal action necessary to enforce the Agreement shall be in a State court of competent jurisdiction located exclusively in Palm Beach County. With the exception of the choice of law and venue provisions contained herein, no remedy conferred upon any party is intended to be exclusive of any other remedy, and each and every such remedy shall be cumulative and shall be in addition to every other remedy given hereunder or now or hereafter existing at law or in equity. No single or partial failure by any party to exercise any right, power, or remedy hereunder, shall preclude that party from exercising that right, power or remedy in the future. **THE AUTHORITY AND CONSULTANT FREELY AND VOLUNTARILY AGREE TO WAIVE ITS RESPECTIVE RIGHT TO A JURY TRIAL ON ANY ISSUE(S) SO TRIABLE.**

ARTICLE 18 – COMMERCIAL NON-DISCRIMINATION POLICY

As a condition of entering into this Agreement, the CONTRACTOR represents and warrants that it will comply with the AUTHORITY's Commercial Non-Discrimination Policy, as described in Section 6.3 of the AUTHORITY's Purchasing Manual, including subsequent amendments thereto, if any. As part of such compliance, the CONTRACTOR shall not discriminate on the basis of race, color, religion, ancestry or national origin, gender, age, marital status, familial status, sexual orientation, gender identity or expression, disability, or genetic information in the solicitation, selection, hiring or commercial treatment of subcontractors, vendors, suppliers, or commercial customers, nor shall the CONTRACTOR retaliate against any person for reporting instances of such discrimination. The CONTRACTOR shall provide equal opportunity for subcontractors, vendors and suppliers to participate in all of its public sector and private sector subcontracting and supply opportunities, provided that nothing contained in this clause shall prohibit or limit otherwise lawful efforts to remedy the effects of marketplace discrimination that have occurred or are occurring in the AUTHORITY's relevant marketplace in Palm Beach County. The CONTRACTOR understands and agrees that a material violation of this clause shall be considered a material breach of this Agreement and may result in termination of this Agreement, disqualification or debarment of the CONTRACTOR from participating in AUTHORITY contracts, or other sanctions. This clause is not enforceable by or for the benefit of, and creates no obligation to, any third party. The CONTRACTOR agrees and understands that the provisions of Section 6.3 of the AUTHORITY's Purchasing Manual are incorporated herein by reference and that the CONTRACTOR is familiar with the contents of same.

ARTICLE 19 - WAIVER

A waiver by either AUTHORITY or CONTRACTOR of any breach of this Agreement shall not be binding upon the waiving party unless such waiver is in writing. In the event of a written waiver, such a waiver shall not affect the waiving party's rights with respect to any other or further breach. The making or acceptance of a payment by either party with knowledge of the existence of a default or breach shall not operate or be construed to operate as a waiver of any subsequent default or breach.

ARTICLE 20 - SEVERABILITY

20.1 The invalidity, illegality, or unenforceability of any provision of this Agreement, or the occurrence of any event rendering any portion or provision of this Agreement void, shall in no way affect the validity or enforceability of any other portion or provision of the Agreement. Any void provision shall be deemed severed from the Agreement and the balance of the Agreement shall be construed and enforced as if the Agreement did not contain the particular portion or provision held to be void. The parties further agree to reform the Agreement to replace any stricken provision with a valid provision that comes as close as possible to the intent of the stricken provision.

20.2 The provisions of this section shall not prevent the entire Agreement from being void if a provision which is of the essence of the Agreement is determined to be void.

ARTICLE 21 - ENTIRETY OF AGREEMENT AND MODIFICATION

The AUTHORITY and the CONTRACTOR agree that this Agreement, including Exhibits, and matters incorporated by specific reference set forth the entire agreement between the parties, and that there are no promises or understandings other than those stated herein. This Agreement supersedes all prior agreements, contracts, proposals, representations, negotiations, letters or other communications between the AUTHORITY and CONTRACTOR pertaining to the services, whether written or oral. None of the provisions or terms and conditions contained in this Agreement may be added to, amended, modified, superseded or otherwise altered except by written instrument executed by the parties thereto.

ARTICLE 22 - SUCCESSORS AND ASSIGNS

AUTHORITY and CONTRACTOR each binds itself and its partners, successors, executors, administrators, assigns and legal representatives to the other party and its partners, successors, executors, administrators, assigns and legal representative. CONTRACTOR shall not assign this Agreement without the prior express written approval of the AUTHORITY in its sole discretion via executed amendment.

ARTICLE 23 - CONTINGENT FEES

The CONTRACTOR warrants that it has not employed or retained any company or person, other than a bona fide employee working solely for the CONTRACTOR to solicit or secure this Agreement and that it has not paid or agreed to pay any person, company, corporation, individual or firm, other than a bona fide employee working solely for the CONTRACTOR, any fee, commission, percentage, gift or any other consideration contingent upon or resulting from the award or making of this Agreement.

ARTICLE 24 - TRUTH-IN-NEGOTIATION CERTIFICATE

24.1 Execution of this Agreement by the CONTRACTOR shall act as the execution of a truth-in-negotiation certificate certifying that the wage rates and costs used to determine the compensation provided for in this Agreement are accurate, complete, and current as of the Effective Date of the Agreement.

24.2 The said rates and costs shall be adjusted to exclude any significant sums should the AUTHORITY determine that the rates and costs were increased due to inaccurate, incomplete or noncurrent wage rates or due to inaccurate representations of fees paid to outside consultants. The AUTHORITY shall exercise its rights under this 'Certificate" within one (1) year following payment.

ARTICLE 25 - OWNERSHIP OF DOCUMENTS

CONTRACTOR shall be required to cooperate with other consultants relative to providing information requested in a timely manner and in the specified form. Any and all documents, records, disks, original drawings, or other information shall become the property of the AUTHORITY for its use and/or distribution as may be deemed appropriate by the AUTHORITY in its sole and unfettered discretion.

ARTICLE 26 - PUBLIC RECORDS, ACCESS AND AUDITS

26.1 It is the intent of this Article to maintain compliance with the Florida Public Records Law, Ch. 119, Florida Statutes, as amended.

26.2 **DESIGNATED RECORDS CUSTODIAN CONTACT INFORMATION:**

IF THE CONTRACTOR HAS QUESTIONS REGARDING THE APPLICATION OF CHAPTER 119, FLORIDA STATUTES, THE CONTRACTOR'S DUTY TO PROVIDE PUBLIC RECORDS RELATING TO THIS AGREEMENT, CONTACT THE CUSTODIAN OF PUBLIC RECORDS AT:
RECORDS MANAGER
SOLID WASTE AUTHORITY OF PALM BEACH COUNTY
7501 NORTH JOG ROAD
WEST PALM BEACH, FL 33412
561-640-4000 EXT. 4606
RECORDSCUSTODIAN@SWA.ORG

26.3 The CONTRACTOR shall maintain records related to all charges, expenses, and costs incurred in estimating and performing the work, in accordance with the timeframes and classifications for records retention as per the General Records Schedule GS1-SL for State and Local Government Agencies (see: https://dos.myflorida.com/library-archives/records-management/general-records-schedules/) after completion or termination of this Contract. Upon AUTHORITY'S request, CONTRACTOR shall provide AUTHORITY with access to such records during normal business hours at a location within Palm Beach County for purposes of inspection or audit.

26.4 Notwithstanding anything herein to the contrary, the CONTRACTOR expressly acknowledges that: i) it is providing a specific service to the AUTHORITY in the performance of this Contract; ii) acting on behalf of the AUTHORITY in the performance of this Contract; iii) that it has read and is familiar with the Florida Public Records Law, Ch. 119, Florida Statutes, as amended, and both understand its responsibility and obligation to comply with this law; and iv) to the extent any question(s) arise regarding its duties to produce public records, it shall contact the Records Manager with same.

26.5 Any public records requests directed to, or related in any way to this contract shall be directed solely to the Records Manager. If the requested records are not in the possession of the Records Manager, they shall immediately notify the CONTRACTOR and the CONTRACTOR must provide the records or allow access to the records within a reasonable time. A CONTRACTOR who fails to provide the records to the public agency within a reasonable time may be subject to penalties under Florida Statutes (F.S) §119.10, and §119.10(2) provides that a person who willfully and knowingly violates the Public Records Act commits a misdemeanor of the first degree, which is punishable by up to a year in jail and a fine not to exceed $1,000.

26.6 Therefore, the CONTRACTOR is required to:

1) Keep and maintain public records that ordinarily and necessarily would be required by the AUTHORITY in order to perform the service;

2) Upon AUTHORITY's request from the AUTHORITY's Records Manager; provide the AUTHORITY with a copy of the requested records to allow the records to be inspected or copied within a reasonable time on the same terms and conditions that the AUTHORITY would provide the records at a cost that does not exceed the cost provided by Florida law;

3) Ensure that public records that are exempt or confidential and exempt from public records disclosure requirements are not disclosed except as authorized by law for the duration of the Agreement term and following the completion of the Agreement if the CONTRACTOR does not transfer the records to the AUTHORITY; and

4) Upon completion of the Agreement, transfer at no cost to the AUTHORITY, all public records in possession of the CONTRACTOR or keep and maintain public records to the AUTHORITY upon completion or termination of the Agreement; the CONTRACTOR shall destroy any duplicate public records that are exempt or confidential and exempt from public records disclosure requirements. If the CONTRACTOR keeps and maintains public records upon completion of the Agreement, the CONTRACTOR shall meet all applicable requirements for retaining public records. All records stored electronically must be provided to the AUTHORITY, upon request from the AUTHORITY's Records Manager, either during performance of the Agreement or after termination or completion of the Agreement in a format that is compatible with the information technology systems of the AUTHORITY.

26.7 Failure of the CONTRACTOR to comply with these requirements shall be a material breach of this Contract.

26.8 CONTRACTOR shall maintain financial and program records to justify all charges and costs incurred in performing the work for at least three (3) years following final payment by the AUTHORITY as Federal Emergency Management Agency (FEMA) sub-grantee as required by 2 CFR 200.333. The AUTHORITY shall have access to such books, records, and documents as required in this section for the purpose of inspection or audit.

26.9 In the event records retention requirements in Florida Statutes Chapter 119 and 257 exceed those of FEMA, the records shall be retained to comply with the State of Florida requirements.

ARTICLE 27 - INSPECTOR GENERAL

Palm Beach County has established the Office of the Inspector General (OIG), Ordinance No. 2009-049 which is authorized and empowered to review past, present and proposed county contracts, transactions, accounts and records. The AUTHORITY has entered into an Interlocal Agreement (ILA) for Inspector General Services. This agreement provides for the Inspector General to provide services to the AUTHORITY in accordance with the authority, functions and powers set out in the Palm Beach County Office of Inspector General Ordinance. All parties doing business with the AUTHORITY and receiving AUTHORITY funds shall fully cooperate with the Inspector General including providing access to records relating to this agreement. The Inspector General has the power to subpoena witnesses, administer oaths, require the production of records, and audit, investigate, monitor, and inspect the activities of the CONTRACTOR, its officers, agents, employees, and lobbyists in order to ensure compliance with contract specifications and detect corruption and fraud. Failure to cooperate with the Inspector General or interference or impeding any investigation shall be in violation of Ordinance 2009-049, and punished pursuant to Section 125.69, Florida Statutes, in the same manner as a second-degree misdemeanor.

ARTICLE 28 - NOTICE

Any notice, demand, communication, or request required or permitted hereunder shall be in writing and delivered in person or sent by certified mail, postage prepaid as follows:

AS TO AUTHORITY

Solid Waste Authority of Palm Beach County
7501 North Jog Road
West Palm Beach, Florida 33412

Attention: Executive Director
Office No.: 561-640-4000 Fax No.: 561-640-3400

AS TO CONTRACTOR

(Name of Contractor)
Address #1
Address #2
City/State/Zip Code

Attention: _____, TITLE
Office No.: _____ Fax No.: _____ E-Mail: _____

Notices shall be effective when received at the addresses as specified above. Changes in the respective addresses to which such notice is to be directed may be made from time to time by either party by written notice to the other party.

Facsimile transmission is acceptable notice effective when received, however, facsimile transmissions received (i.e.; printed) after 5:00 p.m. or on weekends or holidays, will be deemed received on the next business day. The original of the notice must additionally be mailed as required herein.

Nothing contained in this Article shall be construed to restrict the transmission of routine communications between representatives of CONTRACTOR and AUTHORITY.

ARTICLE 29 - CONTRACT ADMINISTRATION

Services of CONTRACTOR shall be under the general direction of the **Chief Operations Officer**, or designee, who shall act as the AUTHORITY'S representative during the term of the Agreement.

ARTICLE 30 - KEY PERSONNEL

CONTRACTOR shall notify AUTHORITY in the event of key personnel changes which might affect this Agreement. Notification shall be made within ten (10) days of said changes. AUTHORITY has the right to reject any proposed changes in key personnel. The following personnel shall be considered key personnel:

_____ – Project Manager
Cell No.: XXX-XXX-XXXX E-Mail: _____@_____.com

ARTICLE 31 – EQUAL BUSINESS OPPORTUNITY PROGRAM:

The Governing Board of the AUTHORITY has implemented the Economic Inclusion Policy administered by the Equal Business Opportunity (EBO) Program Office to ensure that all segments of its business population, including, but not limited to local, small, minority, and women-owned businesses, have an equitable opportunity to participate in the AUTHORITY'S procurement process, in accordance with Section 6.1 through 6.4 of the Purchasing Manual. Program tools and solicitation incentives are hereby referred to as the Affirmative Procurement Initiatives (API).

31.1 **Affirmative Procurement Initiative (API):**

The AUTHORITY has NOT applied an Affirmative Procurement Initiative to this Agreement.

ARTICLE 32 - SCRUTINIZED COMPANIES

32.1 As provided in F.S. 287.135, by entering into this Agreement or performing any work in furtherance hereof, the CONTRACTOR certifies that it, its affiliates, suppliers, subcontractors and consultants who will perform hereunder, have not been placed on the Scrutinized Companies With Activities in Sudan List or Scrutinized Companies With Activities in The Iran Petroleum Energy Sector List created pursuant to F.S. 215.473, or is engaged in business operations in Cuba or Syria.

If the AUTHORITY determines, using credible information available to the public, that a false certification has been submitted by CONTRACTOR, this Agreement may be terminated and a civil penalty equal to the greater of $2 million or twice the amount of this Agreement shall be imposed, pursuant to F.S. 287.135. Said certification must also be submitted at the time of renewal of this Agreement.

32.2 As provided in F.S. 287.135, by entering into this Agreement or performing any work in furtherance hereof, this Agreement certifies that it, its affiliates, suppliers, subcontractors, and consultants who will perform hereunder, have not been placed on the Scrutinized Companies that Boycott Israel List, or is engaged in a boycott of Israel, pursuant to F.S. 215.4725.
If the AUTHORITY determines, using credible information available to the public, that a false certification has been submitted by CONTRACTOR, this may be terminated and a civil penalty equal to the greater of $2 million or twice the amount of this shall be imposed, pursuant to F.S. 287.135. Said certification must also be submitted at the time of renewal of this Agreement.

ARTICLE 33 - AGREEMENTS WITH OTHER GOVERNMENTAL ENTITIES

33.1 The CONTRACTOR agrees that this Agreement constitutes an offer to all State and local government agencies of the State of Florida under the same terms and conditions, for the same prices and for the same effective period as specified in this Agreement should the CONTRACTOR deem it in the best interest of their business to do so.

33.2 The Agreement in no way restricts or interferes with any State or local government agencies of the State of Florida from re-solicitation.

ARTICLE 34 – THIRD PARTY BENEFICIARY DISCLAIMER

It is not the intention of these documents to create third party beneficiary status in any person or entity that is not a direct party to this Agreement, and no language in this Agreement should be construed or interpreted as creating a third party beneficiary**.**

ARTICLE 35 – E-VERIFY – EMPLOYMENT ELIGIBILITY

35.1 The CONTRACTOR certifies, warrants and represents that it is in compliance with Section 448.095, Florida Statutes, as may be amended and that CONTRACTOR shall: (1) register with and use the E-Verify System (E-Verify.gov) to electronically verify the employment eligibility of all newly hired workers; and (2) has verified that all of the CONTRACTOR'S subcontractors performing the duties and obligations of this Agreement are registered with and use the E-Verify System to electronically verify the employment eligibility of all newly hired workers. CONTRACTOR shall obtain from each of its subcontractors an affidavit stating that the subcontractor does not employ, contract with, or subcontract with an Unauthorized Alien, as that term is defined in Section 448.095(1)(k), Florida Statutes, as may be amended. CONTRACTOR shall maintain a copy of any such affidavit from a subcontractor for, at a minimum, the duration of the subcontract and any extension thereof. This provision shall not supersede any provision of this Agreement which requires a longer retention period.

35.2 AUTHORITY shall terminate this Agreement if it has a good faith belief that CONTRACTOR has knowingly violated Section 448.09(1), Florida Statutes, as may be amended. If AUTHORITY has a good faith belief that one of CONTRACTOR'S subcontractor(s) has knowingly violated Section 448.09(1), Florida Statutes, as may be amended, AUTHORITY shall notify CONTRACTOR to terminate its contract with the subcontractor and CONTRACTOR shall immediately terminate its contract with the subcontractor. If AUTHORITY terminates this Agreement pursuant to the above, CONTRACTOR shall be barred from being awarded a future contract by AUTHORITY for a period of one (1) year from the date on which the Agreement was terminated. In the event of such contract termination, CONTRACTOR shall also be liable for any additional costs incurred by AUTHORITY as a result of the termination.

ARTICLE 36 – CONFIDENTIALITY

No reports, information, computer programs, documentation, and/or data given to, or prepared or assembled by the CONTRACTOR under this Agreement shall be made available to any individual or organization by the CONTRACTOR without prior written approval of the AUTHORITY.

REMAINDER OF PAGE LEFT BLANK INTENTIONALLY

ARTICLE 37 – PAYMENT ADJUSTMENT SCHEDULE

37.1 The AUTHORITY acknowledges the fluctuating nature of prices.

37.2 Annual Non-Fuel: The Non-Fuel Adjustment shall be applied to those rates subject to adjustment and as provided within this Agreement. For the purpose of this Agreement, the Non-Fuel component is assumed to represent 90% of the CONTRACTOR's costs. Therefore, 90% of the approved rates shall be so adjusted:

The rates shall be adjusted as follows:

The rates shall be adjusted annually, commencing on the first anniversary date, by the change in the Water and Sewer and Trash Collection Services Index, Series ID CUSR0000SEHG, as published by the United States Department of Labor, Bureau of Labor Statistics (www.bls.gov). The change in the index shall be calculated by dividing the average of the index over the twelve-month period ending the December preceding the effective date of the adjustment (January – December 2022) by the average of the index over the twelve-month period from January 2021 through December 2021. The first Annual Non-Fuel adjustment shall be effective May 7, 2023 to May 6, 2024.

For example:

For the Contract year beginning May 7, 2023, the average of the index over the twelve-month period from January 2022 through December 2022 shall be divided by the average of the index over the twelve-month period from January 2021 through December 2021, multiplying the result by ninety (90) percent of the contract or AUTHORITY established price, and subtracting ninety (90) percent of the contract or AUTHORITY established price.

The surcharge/credit shall be rounded to the nearest cent.

Formula:

Most Recent Year Average / Prior Year Average x .90 x Rate – (.90 x Rate) = Annual Adjustment

Calendar:

Annual Payment Adjustment Calendar

April 2023	April 2024

Extension Clause Annual Payment Adjustment Schedule

April 2025	April 2026	April 2027

37.3 **Activation Fuel Adjustment (Fuel Surcharge/Credit)**

The rates subject to adjustment shall be subject to a fuel price surcharge/credit for fluctuations in the price of fuel. For the purpose of this Agreement, fuel is assumed to represent 10% of the Contractor's costs therefore 10% of the approved rates shall be so adjusted. Fuel adjustment shall be calculated and effective upon activation.

The rates shall be adjusted as follows:

For the rates subject to adjustment, a fuel surcharge/credit shall be charged/credited basis based on the

percentage change in the average price of fuel as published by the Oil Price Information Service (OPIS) and measured by the OPIS Standard Rack, OPIS No. 2 Distillate Gross Prices, Unbranded Average for Miami, Florida between the month of **January 2022 (Base)** and the most recent month available upon activation.

Fuel Adjustment does not use a floor or ceiling and provides adjustments in either direction without limit.

The surcharge/credit shall be rounded to the nearest cent.

Formula:

Most recent OPIS (at activation) / Base x .10 x Rate – (.10 x Rate) = Fuel Adjustment (for duration of activation)

For example:

Should activation occur October 2023, the fuel surcharge/credit shall be calculated by dividing the reported unbranded average price for September 2023 by the Base (unbranded average price for January 2022), multiplying the result by ten (10) percent of the contract or Authority established price, and subtracting ten (10) percent of the contract or Authority established price.

37.4 In the event that either of these indices is no longer available, the parties shall mutually agree to a replacement index. The value of the adjustment will be determined by the AUTHORITY.

ARTICLE 38 – ORDER OF AGREEMENT ACTIVATION/LOCATION ASSIGNMENT

The CONTRACTOR has entered into a contingent Agreement with the AUTHORITY for Hurricane/Disaster Debris Removal, Reduction, and Disposal. The Agreement awarded will be activated on an as-needed basis as solely determined by the AUTHORITY. The AUTHORITY intends to activate the CONTRACTOR in the order of the Selection Committee ranking, as best meets the needs of the AUTHORITY. The AUTHORITY reserves the sole and unfettered right to assign/reassign any or all CONTRACTORS at any time as may be deemed appropriate depending upon the circumstance(s), the event, or any other condition which may warrant such action.

ARTICLE 39 – TASK ORDER/PERFORMANCE

Task Orders shall be executed bilaterally, and the scope of services and format of Task Orders shall be mutually agreed to by the CONTRACTOR and AUTHORITY. Performance will be measured by the metrics established in each Task Order. After 1/3 and again after 2/3 of the stipulated number of days of work in the Task Order have elapsed, the CONTRACTOR(S) shall provide a written progress report to the AUTHORITY for review and acceptance. The AUTHORITY shall have the right to correct for CONTRACTOR default or underperformance by any means it deems in its best interest. CONTRACTOR will be required to provide a daily report of quantity of work performed under each Task Order. The daily report shall be submitted by 11:00 a.m. or earlier the following morning.

ARTICLE 40 – BONDS

CONTRACTOR shall maintain a Proposal Bond in the sum of $500,000. The CONTRACTOR's Proposal Bond will be returned to the CONTRACTOR in exchange for and acceptance of an appropriate size bond as determined by the AUTHORITY after assessment of damage and definition of the CONTRACTOR's scope of service. In case of hurricane caused damage, a Category 1 storm would require a $2,000,000 Bond, a Category II would require a $4,000,000 Bond, a Category III would require a $6,000,000 Bond, a Category IV would require an $8,000,000 Bond, and a Category V would require a $10,000,000 Bond. The Bond required would be a Performance and Payment Bond, Attachment H. The cost of the Bond is included in the unit rates in the Fee Schedule, Exhibit B. The CONTRACTOR shall maintain the Proposal Bond in effect until the Performance and Payment Bond is submitted to and accepted by the AUTHORITY. If the CONTRACTOR fails to supply a Performance and Payment Bond, the AUTHORITY shall be entitled to retain the Proposal Bond to rectify the CONTRACTOR's unacceptable performance. Pending successful annual CONTRACTOR recertification, the Proposal Bond shall be in effect for the entire term of the Agreement, except for period(s) of time

when a Performance and Payment Bond is in effect.

ARTICLE 41 – FLORIDA HIGHWAY ADMINISTRATION (FHWA) FORM 1273

41.1 This Agreement incorporates all of the provisions set forth in the document commonly known as FHWA Form 1273, Attachment F, which is attached hereto and incorporated by reference as part of this Agreement. The term "contractor" as used in Attachment F shall apply to and mean the CONTRACTOR who may be referred to in Attachment F as the "prime contractor", "bidder", "proposer", "prospective primary participant", "prospective participant", "participant" or the like. The CONTRACTOR will perform the duties and obligations of the other contracting party regardless of the description or label used in Form 1273, Attachment F.

41.2 The CONTRACTOR shall comply with the Davis-Bacon wages rates to the extent applicable to the work performed under this Agreement. The provisions of the Davis-Bacon Act do not apply to debris removal work unless such work is done in conjunction with a construction project or "linked" to a particular Federal Highway. Wage rate tables may be found at http://www.dot.state.fl.us/construction/wage.shtm. Said wage rate tables are incorporated into and made part of this Agreement by reference.

ARTICLE 42 – BUY AMERICA REQUIREMENTS

The CONTRACTOR agrees to comply with the requirements of the Federal Buy America law (See 23 U.S.C. 313, ISTEA Sections 1041(a) and 1048(a), as they may be amended from time to time) as they relate to Federal-aid contracts and the use of steel and iron produced in the United States. A description of the requirements of Buy America is set forth in Attachment G, which is attached hereto and incorporated by reference as part of this Agreement. CONTRACTOR shall provide a certification statement regarding the origin of all materials or products covered under the Buy America provisions and used in its performance of the Agreement in accordance with the requirements of law and the AUTHORITY, FDOT, and FEMA, to the extent applicable.

ARTICLE 43 – DISADVANTAGED BUSINESS ENTERPRISES

43.1 This provision shall supplement Article 31 "Equal Business Opportunity Program" of the Agreement. The Agreement is subject to the requirements of 49 CFR Part 26. The CONTRACTOR shall not discriminate on the basis of race, color, national origin, or sex in the performance of the Agreement. The CONTRACTOR shall carry out the applicable requirements of 49 CFR Part 26 in the award and administration of this U.S. DOT-assisted contract. Failure by the CONTRACTOR to carry out these requirements is a material breach of Agreement, which may result in the termination of this Agreement or such other remedy as the AUTHORITY deems appropriate, including but not limited to the withholding of payments. Each subcontract the CONTRACTOR signs with a subcontractor must include the assurance in this paragraph. (See 49 CFR 26.13). Upon request, the CONTRACTOR will provide the AUTHORITY with a copy of each subcontract it enters into.

43.2 The CONTRACTOR is required to pay its subcontractors performing work related to this Agreement for satisfactory performance of that work no later than thirty (30) days after the CONTRACTOR's receipt of payment for that work from the AUTHORITY. The CONTRACTOR may not hold any retainage from its subcontractors unless pursuant to an agreement approved by the AUTHORITY. The CONTRACTOR shall return all retainage payments withheld within thirty (30) days after the subcontractor's work has been satisfactorily completed.

43.3 The CONTRACTOR shall, on a monthly basis, submit payment certifications, including a certification regarding their truth and accuracy, for all payments it is seeking and certifications from all subcontractors indicating who has been paid and how. The certifications shall comply with all Federal and State requirements regarding the reporting of DBE participation. The CONTRACTOR shall, if required by the AUTHORITY or FDOT, report its DBE participation monthly on the Equal Opportunity Reporting System located on the Florida Department of Transportation's (FDOT) website found at www.bipincwebapps.com/bizwebflorida/. Audits

may be conducted to review payments to DBE subcontractors. The CONTRACTOR will fully cooperate with the AUTHORITY, FDOT, or FEMA regarding the monitoring of subcontractors and payments made thereto.

ARTICLE 44 – CERTIFICATION REGARDING SUSPENSION AND DEBARMENT

44.1 This Agreement is a covered transaction for purposes of 49 CFR Part 29. Accordingly, the CONTRACTOR shall verify that neither the CONTRACTOR, nor its principals, as defined at 49 CFR 29.995, or affiliates, as defined at 49 CFR 29.905, are excluded or disqualified from participation in this Agreement as defined at 49 CFR 29.940 and 29.945.

44.2 The CONTRACTOR agrees to comply with the requirements of 49 CFR 29, Subpart C throughout the term of this Agreement. The CONTRACTOR must include the requirement to comply with 49 CFR 29, Subpart C in any lower tier covered transaction it enters into. CONTRACTOR's certification is a material representation of fact relied upon by the AUTHORITY. If it is later determined that the CONTRACTOR knowingly rendered an erroneous certification, in addition to remedies available to the AUTHORITY, the State or Federal government may pursue any available remedies, including but not limited to suspension and/or debarment. The CONTRACTOR further agrees that it will include a provision requiring such compliance in all of its subcontracts or lower tier covered transactions.

ARTICLE 45 – ACCESS TO RECORDS AND THEIR RETENTION

45.1 This provision shall supplement Article 26 of this Agreement. The CONTRACTOR shall maintain adequate records to justify all charges, expenses, and costs incurred in estimating and performing the Agreement for at least five (5) years after completion or termination of this Agreement or FDOT's closure of an "emergency event" with the Florida Division of Emergency Management, whichever comes last, except in the event of litigation or settlement of claims arising from the performance of the Agreement, the CONTRACTOR agrees to maintain said records until all litigation, claims, appeals or exceptions related thereto have been resolved. The records shall be maintained at a location in Palm Beach County, Florida or such other location in Florida approved by the AUTHORITY.

45.2 The CONTRACTOR shall make all of its books, records, and other documents related, in any manner to its or its subcontractors' performance of the Agreement, available to the AUTHORITY and any other funding entity (e.g. FDOT, FEMA, the Comptroller General of the U.S. or any of their authorized representatives) for the purpose of examination, audit, reproduction, excerpts and transcripts, during normal business hours, at the CONTRACTOR's place of business or if CONTRACTOR's place of business is not located in Palm Beach County, then at the location for maintenance of records referenced above. The CONTRACTOR shall also require its subcontractors to make their books, records and documents available for examination, audit, reproduction, excerpts, and transcripts, for the same duration and in the same manner, and at or near the same locations required herein of CONTRACTOR.

ARTICLE 46 – AUDIT REQUIREMENTS

This provision shall supplement Article 26 of this Agreement. The CONTRACTOR agrees that audits may be undertaken of its records related to its performance of the Agreement as may be authorized or required under OMB Circular A-133, as revised. The CONTRACTOR agrees that it will comply and fully cooperate with the AUTHORITY and any State and/or Federal funding agency(ies), including but not limited to FDOT, Florida's Auditor General, FEMA, or any of their authorized representatives, in any audit or monitoring procedures or processes any such entity(ies) may undertake related to CONTRACTOR's performance of the Agreement.

ARTICLE 47 – NATIONAL ENVIRONMENTAL POLICY ACT (NEPA)

The CONTRACTOR shall cooperate with the AUTHORITY, FDOT, and FEMA so as to assure that all activities related to the performance of this Agreement comply with the requirements of the National NEPA of 1969, as amended, and the regulations and guidance related thereto.

ARTICLE 48 – AMERICANS WITH DISABILITIES ACT

The CONTRACTOR does hereby represent and certify that it will comply with all the requirements of the Americans with Disabilities Act of 1990 (42 USC 12102, et seq.), as it may be amended, and all applicable impending regulations of the U.S. DOT, FEMA, and other Federal-aid agencies.

ARTICLE 49 – COMPLIANCE WITH TITLE VI, TITLE VII, AND OTHER FEDERAL LAWS AND REGULATIONS

The CONTRACTOR does hereby represent and certify that it will comply with all the requirements imposed by Title VI of the Civil Rights Act of 1964 and Title VII of the Civil Rights Act of 1968, as they have been and may be modified from time to time (42 USC 2000d et. Seq. and 3601 et seq.) and the Age Discrimination and Employment Act of 1967 and Section 303 of the Age Discrimination Act of 1975, as amended (42 USC 6102), and all applicable Federal laws and regulations, policies, procedures, and directives of the U.S.DOT, FEMA and/or other Federal-aid agencies, as they may be promulgated and amended from time to time.

ARTICLE 50 – CONVICT LABOR PROHIBITION

The CONTRACTOR does hereby represent and certify that it will comply with the convict labor prohibition in 23 U.S.C. 114, and all implementing regulations thereto.

ARTICLE 51 – CERTIFICATION REGARDING LOBBYING ACTIVITIES

A Bidder or Proposer for an award of certain Federal-Aid contracts in the amount of $100,000 or more, must file the certification required by 49 CFR Part 2. The CONTRACTOR confirms that by signing and submitting a Bid or Proposal for the work covered by this Agreement, it made the certification described in Section X1 of the Attachment F herein.

ARTICLE 52 – DEPARTMENT OF HOMELAND SECURITY (DHS) SEAL, LOGO, AND FLAGS

The CONTRACTOR shall not use the DHS seal(s), logos, crests, or reproductions of flags or likenesses of DHS agency officials without specific FEMA pre-approval.

ARTICLE 53 – NO OBLIGATION BY FEDERAL GOVERNMENT

The Federal Government is not a party to this Agreement and is not subject to any obligations or liabilities to the AUTHORITY, CONTRACTOR, or any other party pertaining to any matter resulting from this Agreement.

ARTICLE 54 – PROGRAM FRAUD AND FALSE OR FRAUDULENT STATEMENTS OR RELATED ACTS

The CONTRACTOR acknowledges that 31 U.S.C Chapter 38 (Administrative Remedies for False Claims and Statements) applies to the CONTRACTOR's actions pertaining to this Agreement.

REMAINDER OF PAGE LEFT BLANK INTENTIONALLY

In Witness Whereof, AUTHORITY, and CONTRACTOR have made and executed this Agreement all as of the day and year first above written.

SOLID WASTE AUTHORITY OF PALM BEACH COUNTY:

WITNESS:

1. _____

2. _____

By: _____
Daniel Pellowitz
Executive Director

(SEAL)

APPROVED AS TO LEGAL SUFFICIENCY:

By: _____
Howard J. Falcon, III
General Counsel

APPROVED AS TO TERMS AND CONDITIONS:

_____
Signature

_____
Print Name

_____
Title

ATTEST:

_____
Corporate Secretary

WITNESS:

1. _____

2. _____

CONTRACTOR:

_____
Authorized Signature

_____
Print Name

_____
Title

_____
Date

(Affix Corporate Seal)

SCOPE OF WORK

EXHIBIT "B"

FEE SCHEDULE

ATTACHMENTS CONTINUED

ATTACHMENT "B"

SOLID WASTE AUTHORITY
OF PALM BEACH COUNTY

7501 North Jog Road
West Palm Beach, Florida 33412
Telephone: 561-640-4000 • Fax: 561-640-3400

TASK ORDER
DISASTER DEBRIS MANAGEMENT

TO_____
Task Order No.

In accordance with _____(Contractor) contract, with the Solid Waste Authority of PBC, Florida, (AUTHORITY) Agreement No._____ for Hurricane/Disaster Debris Removal, Reduction, and Disposal dated _____ the AUTHORITY hereby requests and authorizes the services to be performed on the project as described below:

Project: _____

Specific Work to be performed: _____

Duration of Work (Include Start Date, End Date and Total Calendar Days): _____

Method of Payment: _____

Estimated Cost of this Task Order: $_____

Contractor Signature: _____ Date: _____

AUTHORITY Signature: _____ Date: _____

SWA Use Only					
SWA Requestor/Monitor:				Date:	
SWA Dept. Director:				Date:	
Vendor No.:		Account No.:		Project:	
Purchasing:		Budget:		Accounting:	

ATTACHMENT "C"
PRE-APPROVED TEMPORARY DEBRIS MANAGEMENT SITES MAP

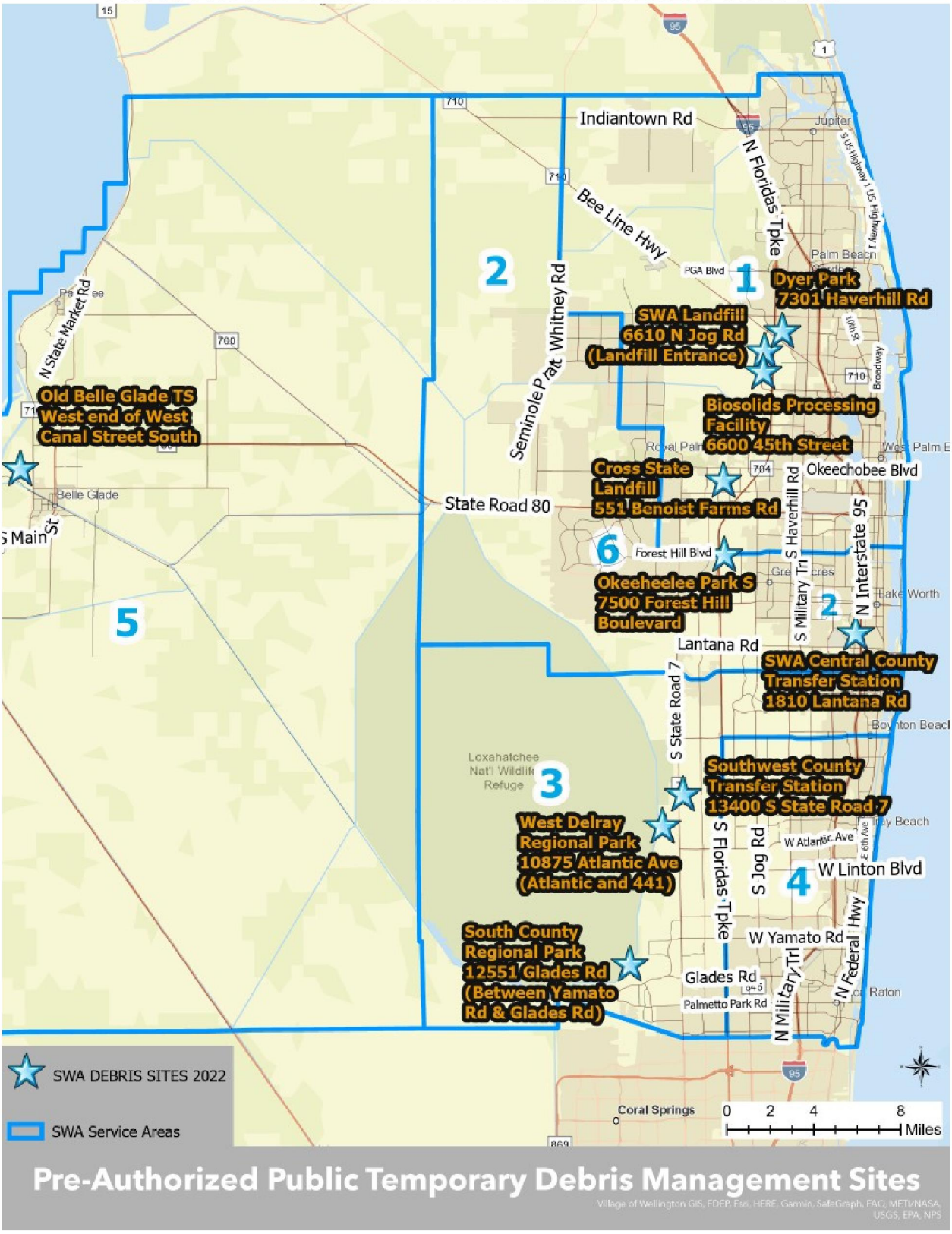

ATTACHMENT "D"

PUBLIC ASSISTANCE PROGRAM AND POLICY GUIDE

The Public Assistance Program and Policy Guide, Version 4, Effective June 1, 2020 (see hyperlink below) is the most recent reference material that will provide additional information:
https://www.fema.gov/sites/default/files/documents/fema_pappg-v4-updated-links_policy_6-1-2020.pdf

PROJECT MANAGEMENT

Project management begins when a disaster occurs and does not end until an applicant has received final payment for the project. Good project management ensures successful recovery from the disaster, expedited payment of funds, and more efficient close-outs of PA Program grants.

Record Keeping

It is critical that the applicant establish and maintain accurate records of events and expenditures related to disaster recovery work. The information required for documentation describes the "who, what, when, where, why, and how much" for each item of disaster recovery work. The applicant should have a financial and record keeping system in place that can be used to track these elements. The importance of maintaining a complete and accurate set of records for each project cannot be over-emphasized. Good documentation facilitates the project formulation, validation, approval, and funding processes.

All of the documentation pertaining to a project should be filed with the corresponding *PW* and maintained by the applicant as the permanent record of the project. These records become the basis for verification of the accuracy of project cost estimates during validation of small projects, reconciliation of costs for large projects, and audits.

Applicants should begin the record keeping process before a disaster is declared by the President. To ensure that work performed both before and after a disaster declaration is well documented, potential applicants should:

- designate a person to coordinate the compilation and filing of records;
- establish a file for each site where work has been or will be performed; and
- maintain accurate disbursement and accounting records to document the work performed and the costs incurred.

The Federal Office of Management and Budget requires grant recipients to maintain financial and program records on file for three years following final payment. Records of grant recipients may be subject to the provisions of the Single Audit Act, as described on page 117 of this guide. Applicants may refer to the Applicant Handbook, FEMA 323, for additional information regarding record-keeping.

ATTACHMENT "E"

MOBILIZATION SCHEDULE

CONTRACTOR shall commence mobilization of equipment, operators, and laborers immediately upon receipt of a Mobilization Task Order to meet the progress pattern set below.

	Category 1 & 2	Category 3	Category 4	Category 5
Within 24 hours	25%	25%	20%	15%
Within 48 hours	30%	30%	30%	25%
Within 72 hours	40%	40%	40%	40%
Within 96 hours	60%	60%	50%	50%
Within 5 days	100%	80%	60%	60%
Within 10 days		100%	80%	70%
Within 14 days			100%	80%
Within 20 days				100%

ATTACHMENT "F"

FHWA-1273

FHWA-1273 – Revised May 1, 2012

REQUIRED CONTRACT PROVISIONS
FEDERAL-AID CONSTRUCTION CONTRACTS

I. General
II. Nondiscrimination
III. Nonsegregated Facilities
IV. Davis-Bacon and Related Act Provisions
V. Contract Work Hours and Safety Standards Act Provisions
VI. Subletting or Assigning the Contract
VII. Safety: Accident Prevention
VIII. False Statements Concerning Highway Projects
IX. Implementation of Clean Air Act and Federal Water Pollution Control Act
X. Compliance with Governmentwide Suspension and Debarment Requirements
XI. Certification Regarding Use of Contract Funds for Lobbying

ATTACHMENTS

A. Employment and Materials Preference for Appalachian Development Highway System or Appalachian Local Access Road Contracts (included in Appalachian contracts only)

I. GENERAL

1. Form FHWA-1273 must be physically incorporated in each construction contract funded under Title 23 (excluding emergency contracts solely intended for debris removal). The contractor (or subcontractor) must insert this form in each subcontract and further require its inclusion in all lower tier subcontracts (excluding purchase orders, rental agreements and other agreements for supplies or services).

The applicable requirements of Form FHWA-1273 are incorporated by reference for work done under any purchase order, rental agreement or agreement for other services. The prime contractor shall be responsible for compliance by any subcontractor, lower-tier subcontractor or service provider.

Form FHWA-1273 must be included in all Federal-aid design-build contracts, in all subcontracts and in lower tier subcontracts (excluding subcontracts for design services, purchase orders, rental agreements and other agreements for supplies or services). The design-builder shall be responsible for compliance by any subcontractor, lower-tier subcontractor or service provider.

Contracting agencies may reference Form FHWA-1273 in bid proposal or request for proposal documents, however, the Form FHWA-1273 must be physically incorporated (not referenced) in all contracts, subcontracts and lower-tier subcontracts (excluding purchase orders, rental agreements and other agreements for supplies or services related to a construction contract).

2. Subject to the applicability criteria noted in the following sections, these contract provisions shall apply to all work performed on the contract by the contractor's own organization and with the assistance of workers under the contractor's immediate superintendence and to all work performed on the contract by piecework, station work, or by subcontract.

3. A breach of any of the stipulations contained in these Required Contract Provisions may be sufficient grounds for withholding of progress payments, withholding of final payment, termination of the contract, suspension / debarment or any other action determined to be appropriate by the contracting agency and FHWA.

4. Selection of Labor: During the performance of this contract, the contractor shall not use convict labor for any purpose within the limits of a construction project on a Federal-aid highway unless it is labor performed by convicts who are on parole, supervised release, or probation. The term Federal-aid highway does not include roadways functionally classified as local roads or rural minor collectors.

II. NONDISCRIMINATION

The provisions of this section related to 23 CFR Part 230 are applicable to all Federal-aid construction contracts and to all related construction subcontracts of $10,000 or more. The provisions of 23 CFR Part 230 are not applicable to material supply, engineering, or architectural service contracts.

In addition, the contractor and all subcontractors must comply with the following policies: Executive Order 11246, 41 CFR 60, 29 CFR 1625-1627, Title 23 USC Section 140, the Rehabilitation Act of 1973, as amended (29 USC 794), Title VI of the Civil Rights Act of 1964, as amended, and related regulations including 49 CFR Parts 21, 26 and 27; and 23 CFR Parts 200, 230, and 633.

The contractor and all subcontractors must comply with: the requirements of the Equal Opportunity Clause in 41 CFR 60-1.4(b) and, for all construction contracts exceeding $10,000, the Standard Federal Equal Employment Opportunity Construction Contract Specifications in 41 CFR 60-4.3.

Note: The U.S. Department of Labor has exclusive authority to determine compliance with Executive Order 11246 and the policies of the Secretary of Labor including 41 CFR 60, and 29 CFR 1625-1627. The contracting agency and the FHWA have the authority and the responsibility to ensure compliance with Title 23 USC Section 140, the Rehabilitation Act of 1973, as amended (29 USC 794), and Title VI of the Civil Rights Act of 1964, as amended, and related regulations including 49 CFR Parts 21, 26 and 27; and 23 CFR Parts 200, 230, and 633.

The following provision is adopted from 23 CFR 230, Appendix A, with appropriate revisions to conform to the U.S. Department of Labor (US DOL) and FHWA requirements.

1. **Equal Employment Opportunity**: Equal employment opportunity (EEO) requirements not to discriminate and to take affirmative action to assure equal opportunity as set forth under laws, executive orders, rules, regulations (28 CFR 35, 29 CFR 1630, 29 CFR 1625-1627, 41 CFR 60 and 49 CFR 27) and orders of the Secretary of Labor as modified by the provisions prescribed herein, and imposed pursuant to 23 U.S.C. 140 shall constitute the EEO and specific affirmative action standards for the contractor's project activities under

this contract. The provisions of the Americans with Disabilities Act of 1990 (42 U.S.C. 12101 et seq.) set forth under 28 CFR 35 and 29 CFR 1630 are incorporated by reference in this contract. In the execution of this contract, the contractor agrees to comply with the following minimum specific requirement activities of EEO:

a. The contractor will work with the contracting agency and the Federal Government to ensure that it has made every good faith effort to provide equal opportunity with respect to all of its terms and conditions of employment and in their review of activities under the contract.

b. The contractor will accept as its operating policy the following statement:

"It is the policy of this Company to assure that applicants are employed, and that employees are treated during employment, without regard to their race, religion, sex, color, national origin, age or disability. Such action shall include: employment, upgrading, demotion, or transfer; recruitment or recruitment advertising; layoff or termination; rates of pay or other forms of compensation; and selection for training, including apprenticeship, pre-apprenticeship, and/or on-the-job training."

2. EEO Officer: The contractor will designate and make known to the contracting officers an EEO Officer who will have the responsibility for and must be capable of effectively administering and promoting an active EEO program and who must be assigned adequate authority and responsibility to do so.

3. Dissemination of Policy: All members of the contractor's staff who are authorized to hire, supervise, promote, and discharge employees, or who recommend such action, or who are substantially involved in such action, will be made fully cognizant of, and will implement, the contractor's EEO policy and contractual responsibilities to provide EEO in each grade and classification of employment. To ensure that the above agreement will be met, the following actions will be taken as a minimum:

a. Periodic meetings of supervisory and personnel office employees will be conducted before the start of work and then not less often than once every six months, at which time the contractor's EEO policy and its implementation will be reviewed and explained. The meetings will be conducted by the EEO Officer.

b. All new supervisory or personnel office employees will be given a thorough indoctrination by the EEO Officer, covering all major aspects of the contractor's EEO obligations within thirty days following their reporting for duty with the contractor.

c. All personnel who are engaged in direct recruitment for the project will be instructed by the EEO Officer in the contractor's procedures for locating and hiring minorities and women.

d. Notices and posters setting forth the contractor's EEO policy will be placed in areas readily accessible to employees, applicants for employment and potential employees.

e. The contractor's EEO policy and the procedures to implement such policy will be brought to the attention of employees by means of meetings, employee handbooks, or other appropriate means.

4. Recruitment: When advertising for employees, the contractor will include in all advertisements for employees the notation: "An Equal Opportunity Employer." All such advertisements will be placed in publications having a large circulation among minorities and women in the area from which the project work force would normally be derived.

a. The contractor will, unless precluded by a valid bargaining agreement, conduct systematic and direct recruitment through public and private employee referral sources likely to yield qualified minorities and women. To meet this requirement, the contractor will identify sources of potential minority group employees, and establish with such identified sources procedures whereby minority and women applicants may be referred to the contractor for employment consideration.

b. In the event the contractor has a valid bargaining agreement providing for exclusive hiring hall referrals, the contractor is expected to observe the provisions of that agreement to the extent that the system meets the contractor's compliance with EEO contract provisions. Where implementation of such an agreement has the effect of discriminating against minorities or women, or obligates the contractor to do the same, such implementation violates Federal nondiscrimination provisions.

c. The contractor will encourage its present employees to refer minorities and women as applicants for employment. Information and procedures with regard to referring such applicants will be discussed with employees.

5. Personnel Actions: Wages, working conditions, and employee benefits shall be established and administered, and personnel actions of every type, including hiring, upgrading, promotion, transfer, demotion, layoff, and termination, shall be taken without regard to race, color, religion, sex, national origin, age or disability. The following procedures shall be followed:

a. The contractor will conduct periodic inspections of project sites to insure that working conditions and employee facilities do not indicate discriminatory treatment of project site personnel.

b. The contractor will periodically evaluate the spread of wages paid within each classification to determine any evidence of discriminatory wage practices.

c. The contractor will periodically review selected personnel actions in depth to determine whether there is evidence of discrimination. Where evidence is found, the contractor will promptly take corrective action. If the review indicates that the discrimination may extend beyond the actions reviewed, such corrective action shall include all affected persons.

d. The contractor will promptly investigate all complaints of alleged discrimination made to the contractor in connection with its obligations under this contract, will attempt to resolve such complaints, and will take appropriate corrective action within a reasonable time. If the investigation indicates that the discrimination may affect persons other than the complainant, such corrective action shall include such other persons. Upon completion of each investigation, the contractor will inform every complainant of all of their avenues of appeal.

6. Training and Promotion:

a. The contractor will assist in locating, qualifying, and increasing the skills of minorities and women who are

applicants for employment or current employees. Such efforts should be aimed at developing full journey level status employees in the type of trade or job classification involved.

b. Consistent with the contractor's work force requirements and as permissible under Federal and State regulations, the contractor shall make full use of training programs, i.e., apprenticeship, and on-the-job training programs for the geographical area of contract performance. In the event a special provision for training is provided under this contract, this subparagraph will be superseded as indicated in the special provision. The contracting agency may reserve training positions for persons who receive welfare assistance in accordance with 23 U.S.C. 140(a).

c. The contractor will advise employees and applicants for employment of available training programs and entrance requirements for each.

d. The contractor will periodically review the training and promotion potential of employees who are minorities and women and will encourage eligible employees to apply for such training and promotion.

7. Unions: If the contractor relies in whole or in part upon unions as a source of employees, the contractor will use good faith efforts to obtain the cooperation of such unions to increase opportunities for minorities and women. Actions by the contractor, either directly or through a contractor's association acting as agent, will include the procedures set forth below:

a. The contractor will use good faith efforts to develop, in cooperation with the unions, joint training programs aimed toward qualifying more minorities and women for membership in the unions and increasing the skills of minorities and women so that they may qualify for higher paying employment.

b. The contractor will use good faith efforts to incorporate an EEO clause into each union agreement to the end that such union will be contractually bound to refer applicants without regard to their race, color, religion, sex, national origin, age or disability.

c. The contractor is to obtain information as to the referral practices and policies of the labor union except that to the extent such information is within the exclusive possession of the labor union and such labor union refuses to furnish such information to the contractor, the contractor shall so certify to the contracting agency and shall set forth what efforts have been made to obtain such information.

d. In the event the union is unable to provide the contractor with a reasonable flow of referrals within the time limit set forth in the collective bargaining agreement, the contractor will, through independent recruitment efforts, fill the employment vacancies without regard to race, color, religion, sex, national origin, age or disability; making full efforts to obtain qualified and/or qualifiable minorities and women. The failure of a union to provide sufficient referrals (even though it is obligated to provide exclusive referrals under the terms of a collective bargaining agreement) does not relieve the contractor from the requirements of this paragraph. In the event the union referral practice prevents the contractor from meeting the obligations pursuant to Executive Order 11246, as amended, and these special provisions, such contractor shall immediately notify the contracting agency.

8. Reasonable Accommodation for Applicants / Employees with Disabilities: The contractor must be familiar with the requirements for and comply with the Americans with Disabilities Act and all rules and regulations established there under. Employers must provide reasonable accommodation in all employment activities unless to do so would cause an undue hardship.

9. Selection of Subcontractors, Procurement of Materials and Leasing of Equipment: The contractor shall not discriminate on the grounds of race, color, religion, sex, national origin, age or disability in the selection and retention of subcontractors, including procurement of materials and leases of equipment. The contractor shall take all necessary and reasonable steps to ensure nondiscrimination in the administration of this contract.

a. The contractor shall notify all potential subcontractors and suppliers and lessors of their EEO obligations under this contract.

b. The contractor will use good faith efforts to ensure subcontractor compliance with their EEO obligations.

10. Assurance Required by 49 CFR 26.13(b):

a. The requirements of 49 CFR Part 26 and the State DOT's U.S. DOT-approved DBE program are incorporated by reference.

b. The contractor or subcontractor shall not discriminate on the basis of race, color, national origin, or sex in the performance of this contract. The contractor shall carry out applicable requirements of 49 CFR Part 26 in the award and administration of DOT-assisted contracts. Failure by the contractor to carry out these requirements is a material breach of this contract, which may result in the termination of this contract or such other remedy as the contracting agency deems appropriate.

11. Records and Reports: The contractor shall keep such records as necessary to document compliance with the EEO requirements. Such records shall be retained for a period of three years following the date of the final payment to the contractor for all contract work and shall be available at reasonable times and places for inspection by authorized representatives of the contracting agency and the FHWA.

a. The records kept by the contractor shall document the following:

(1) The number and work hours of minority and non-minority group members and women employed in each work classification on the project;

(2) The progress and efforts being made in cooperation with unions, when applicable, to increase employment opportunities for minorities and women; and

(3) The progress and efforts being made in locating, hiring, training, qualifying, and upgrading minorities and women;

b. The contractors and subcontractors will submit an annual report to the contracting agency each July for the duration of the project, indicating the number of minority, women, and non-minority group employees currently engaged in each work classification required by the contract work. This information is to be reported on Form FHWA-1391. The staffing data should represent the project work force on board in all or any part of the last payroll period preceding the end of July. If on-the-job training is being required by special provision, the contractor

will be required to collect and report training data. The employment data should reflect the work force on board during all or any part of the last payroll period preceding the end of July.

III. NONSEGREGATED FACILITIES

This provision is applicable to all Federal-aid construction contracts and to all related construction subcontracts of $10,000 or more.

The contractor must ensure that facilities provided for employees are provided in such a manner that segregation on the basis of race, color, religion, sex, or national origin cannot result. The contractor may neither require such segregated use by written or oral policies nor tolerate such use by employee custom. The contractor's obligation extends further to ensure that its employees are not assigned to perform their services at any location, under the contractor's control, where the facilities are segregated. The term "facilities" includes waiting rooms, work areas, restaurants and other eating areas, time clocks, restrooms, washrooms, locker rooms, and other storage or dressing areas, parking lots, drinking fountains, recreation or entertainment areas, transportation, and housing provided for employees. The contractor shall provide separate or single-user restrooms and necessary dressing or sleeping areas to assure privacy between sexes.

IV. DAVIS-BACON AND RELATED ACT PROVISIONS

This section is applicable to all Federal-aid construction projects exceeding $2,000 and to all related subcontracts and lower-tier subcontracts (regardless of subcontract size). The requirements apply to all projects located within the right-of-way of a roadway that is functionally classified as Federal-aid highway. This excludes roadways functionally classified as local roads or rural minor collectors, which are exempt. Contracting agencies may elect to apply these requirements to other projects.

The following provisions are from the U.S. Department of Labor regulations in 29 CFR 5.5 "Contract provisions and related matters" with minor revisions to conform to the FHWA-1273 format and FHWA program requirements.

1. Minimum wages

a. All laborers and mechanics employed or working upon the site of the work, will be paid unconditionally and not less often than once a week, and without subsequent deduction or rebate on any account (except such payroll deductions as are permitted by regulations issued by the Secretary of Labor under the Copeland Act (29 CFR part 3)), the full amount of wages and bona fide fringe benefits (or cash equivalents thereof) due at time of payment computed at rates not less than those contained in the wage determination of the Secretary of Labor which is attached hereto and made a part hereof, regardless of any contractual relationship which may be alleged to exist between the contractor and such laborers and mechanics.

Contributions made or costs reasonably anticipated for bona fide fringe benefits under section 1(b)(2) of the Davis-Bacon Act on behalf of laborers or mechanics are considered wages paid to such laborers or mechanics, subject to the provisions of paragraph 1.d. of this section; also, regular contributions made or costs incurred for more than a weekly period (but not less often than quarterly) under plans, funds, or programs which cover the particular weekly period, are deemed to be constructively made or incurred during such weekly period. Such laborers and mechanics shall be paid the appropriate wage rate and fringe benefits on the wage determination for the classification of work actually performed, without regard to skill, except as provided in 29 CFR 5.5(a)(4). Laborers or mechanics performing work in more than one classification may be compensated at the rate specified for each classification for the time actually worked therein: Provided, That the employer's payroll records accurately set forth the time spent in each classification in which work is performed. The wage determination (including any additional classification and wage rates conformed under paragraph 1.b. of this section) and the Davis-Bacon poster (WH–1321) shall be posted at all times by the contractor and its subcontractors at the site of the work in a prominent and accessible place where it can be easily seen by the workers.

b.(1) The contracting officer shall require that any class of laborers or mechanics, including helpers, which is not listed in the wage determination and which is to be employed under the contract shall be classified in conformance with the wage determination. The contracting officer shall approve an additional classification and wage rate and fringe benefits therefore only when the following criteria have been met:

(i) The work to be performed by the classification requested is not performed by a classification in the wage determination; and

(ii) The classification is utilized in the area by the construction industry; and

(iii) The proposed wage rate, including any bona fide fringe benefits, bears a reasonable relationship to the wage rates contained in the wage determination.

(2) If the contractor and the laborers and mechanics to be employed in the classification (if known), or their representatives, and the contracting officer agree on the classification and wage rate (including the amount designated for fringe benefits where appropriate), a report of the action taken shall be sent by the contracting officer to the Administrator of the Wage and Hour Division, Employment Standards Administration, U.S. Department of Labor, Washington, DC 20210. The Administrator, or an authorized representative, will approve, modify, or disapprove every additional classification action within 30 days of receipt and so advise the contracting officer or will notify the contracting officer within the 30-day period that additional time is necessary.

(3) In the event the contractor, the laborers or mechanics to be employed in the classification or their representatives, and the contracting officer do not agree on the proposed classification and wage rate (including the amount designated for fringe benefits, where appropriate), the contracting officer shall refer the questions, including the views of all interested parties and the recommendation of the contracting officer, to the Wage and Hour Administrator for determination. The Wage and Hour Administrator, or an authorized representative, will issue a determination within 30 days of receipt and so advise the contracting officer or

will notify the contracting officer within the 30-day period that additional time is necessary.

(4) The wage rate (including fringe benefits where appropriate) determined pursuant to paragraphs 1.b.(2) or 1.b.(3) of this section, shall be paid to all workers performing work in the classification under this contract from the first day on which work is performed in the classification.

c. Whenever the minimum wage rate prescribed in the contract for a class of laborers or mechanics includes a fringe benefit which is not expressed as an hourly rate, the contractor shall either pay the benefit as stated in the wage determination or shall pay another bona fide fringe benefit or an hourly cash equivalent thereof.

d. If the contractor does not make payments to a trustee or other third person, the contractor may consider as part of the wages of any laborer or mechanic the amount of any costs reasonably anticipated in providing bona fide fringe benefits under a plan or program, Provided, That the Secretary of Labor has found, upon the written request of the contractor, that the applicable standards of the Davis-Bacon Act have been met. The Secretary of Labor may require the contractor to set aside in a separate account assets for the meeting of obligations under the plan or program.

2. Withholding

The contracting agency shall upon its own action or upon written request of an authorized representative of the Department of Labor, withhold or cause to be withheld from the contractor under this contract, or any other Federal contract with the same prime contractor, or any other federally-assisted contract subject to Davis-Bacon prevailing wage requirements, which is held by the same prime contractor, so much of the accrued payments or advances as may be considered necessary to pay laborers and mechanics, including apprentices, trainees, and helpers, employed by the contractor or any subcontractor the full amount of wages required by the contract. In the event of failure to pay any laborer or mechanic, including any apprentice, trainee, or helper, employed or working on the site of the work, all or part of the wages required by the contract, the contracting agency may, after written notice to the contractor, take such action as may be necessary to cause the suspension of any further payment, advance, or guarantee of funds until such violations have ceased.

3. Payrolls and basic records

a. Payrolls and basic records relating thereto shall be maintained by the contractor during the course of the work and preserved for a period of three years thereafter for all laborers and mechanics working at the site of the work. Such records shall contain the name, address, and social security number of each such worker, his or her correct classification, hourly rates of wages paid (including rates of contributions or costs anticipated for bona fide fringe benefits or cash equivalents thereof of the types described in section 1(b)(2)(B) of the Davis-Bacon Act), daily and weekly number of hours worked, deductions made and actual wages paid. Whenever the Secretary of Labor has found under 29 CFR 5.5(a)(1)(iv) that the wages of any laborer or mechanic include the amount of any costs reasonably anticipated in providing benefits under a plan or program described in section 1(b)(2)(B) of the Davis-Bacon Act, the contractor shall maintain records which show that the commitment to provide such benefits is enforceable, that the plan or program is financially responsible, and that the plan or program has been communicated in writing to the laborers or mechanics affected, and records which show the costs anticipated or the actual cost incurred in providing such benefits. Contractors employing apprentices or trainees under approved programs shall maintain written evidence of the registration of apprenticeship programs and certification of trainee programs, the registration of the apprentices and trainees, and the ratios and wage rates prescribed in the applicable programs.

b.(1) The contractor shall submit weekly for each week in which any contract work is performed a copy of all payrolls to the contracting agency. The payrolls submitted shall set out accurately and completely all of the information required to be maintained under 29 CFR 5.5(a)(3)(i), except that full social security numbers and home addresses shall not be included on weekly transmittals. Instead the payrolls shall only need to include an individually identifying number for each employee (e.g. , the last four digits of the employee's social security number). The required weekly payroll information may be submitted in any form desired. Optional Form WH–347 is available for this purpose from the Wage and Hour Division Web site at http://www.dol.gov/esa/whd/forms/wh347instr.htm or its successor site. The prime contractor is responsible for the submission of copies of payrolls by all subcontractors. Contractors and subcontractors shall maintain the full social security number and current address of each covered worker, and shall provide them upon request to the contracting agency for transmission to the State DOT, the FHWA or the Wage and Hour Division of the Department of Labor for purposes of an investigation or audit of compliance with prevailing wage requirements. It is not a violation of this section for a prime contractor to require a subcontractor to provide addresses and social security numbers to the prime contractor for its own records, without weekly submission to the contracting agency..

(2) Each payroll submitted shall be accompanied by a "Statement of Compliance," signed by the contractor or subcontractor or his or her agent who pays or supervises the payment of the persons employed under the contract and shall certify the following:

(i) That the payroll for the payroll period contains the information required to be provided under §5.5 (a)(3)(ii) of Regulations, 29 CFR part 5, the appropriate information is being maintained under §5.5 (a)(3)(i) of Regulations, 29 CFR part 5, and that such information is correct and complete;

(ii) That each laborer or mechanic (including each helper, apprentice, and trainee) employed on the contract during the payroll period has been paid the full weekly wages earned, without rebate, either directly or indirectly, and that no deductions have been made either directly or indirectly from the full wages earned, other than permissible deductions as set forth in Regulations, 29 CFR part 3;

(iii) That each laborer or mechanic has been paid not less than the applicable wage rates and fringe benefits or cash equivalents for the classification of work performed, as specified in the applicable wage determination incorporated into the contract.

(3) The weekly submission of a properly executed certification set forth on the reverse side of Optional Form WH–347 shall satisfy the requirement for submission of the "Statement of Compliance" required by paragraph 3.b.(2) of this section.

(4) The falsification of any of the above certifications may subject the contractor or subcontractor to civil or criminal prosecution under section 1001 of title 18 and section 231 of title 31 of the United States Code.

c. The contractor or subcontractor shall make the records required under paragraph 3.a. of this section available for inspection, copying, or transcription by authorized representatives of the contracting agency, the State DOT, the FHWA, or the Department of Labor, and shall permit such representatives to interview employees during working hours on the job. If the contractor or subcontractor fails to submit the required records or to make them available, the FHWA may, after written notice to the contractor, the contracting agency or the State DOT, take such action as may be necessary to cause the suspension of any further payment, advance, or guarantee of funds. Furthermore, failure to submit the required records upon request or to make such records available may be grounds for debarment action pursuant to 29 CFR 5.12.

4. Apprentices and trainees

a. Apprentices (programs of the USDOL).

Apprentices will be permitted to work at less than the predetermined rate for the work they performed when they are employed pursuant to and individually registered in a bona fide apprenticeship program registered with the U.S. Department of Labor, Employment and Training Administration, Office of Apprenticeship Training, Employer and Labor Services, or with a State Apprenticeship Agency recognized by the Office, or if a person is employed in his or her first 90 days of probationary employment as an apprentice in such an apprenticeship program, who is not individually registered in the program, but who has been certified by the Office of Apprenticeship Training, Employer and Labor Services or a State Apprenticeship Agency (where appropriate) to be eligible for probationary employment as an apprentice.

The allowable ratio of apprentices to journeymen on the job site in any craft classification shall not be greater than the ratio permitted to the contractor as to the entire work force under the registered program. Any worker listed on a payroll at an apprentice wage rate, who is not registered or otherwise employed as stated above, shall be paid not less than the applicable wage rate on the wage determination for the classification of work actually performed. In addition, any apprentice performing work on the job site in excess of the ratio permitted under the registered program shall be paid not less than the applicable wage rate on the wage determination for the work actually performed. Where a contractor is performing construction on a project in a locality other than that in which its program is registered, the ratios and wage rates (expressed in percentages of the journeyman's hourly rate) specified in the contractor's or subcontractor's registered program shall be observed.

Every apprentice must be paid at not less than the rate specified in the registered program for the apprentice's level of progress, expressed as a percentage of the journeymen hourly rate specified in the applicable wage determination. Apprentices shall be paid fringe benefits in accordance with the provisions of the apprenticeship program. If the apprenticeship program does not specify fringe benefits, apprentices must be paid the full amount of fringe benefits listed on the wage determination for the applicable classification. If the Administrator determines that a different practice prevails for the applicable apprentice classification, fringes shall be paid in accordance with that determination.

In the event the Office of Apprenticeship Training, Employer and Labor Services, or a State Apprenticeship Agency recognized by the Office, withdraws approval of an apprenticeship program, the contractor will no longer be permitted to utilize apprentices at less than the applicable predetermined rate for the work performed until an acceptable program is approved.

b. Trainees (programs of the USDOL).

Except as provided in 29 CFR 5.16, trainees will not be permitted to work at less than the predetermined rate for the work performed unless they are employed pursuant to and individually registered in a program which has received prior approval, evidenced by formal certification by the U.S. Department of Labor, Employment and Training Administration.

The ratio of trainees to journeymen on the job site shall not be greater than permitted under the plan approved by the Employment and Training Administration.

Every trainee must be paid at not less than the rate specified in the approved program for the trainee's level of progress, expressed as a percentage of the journeyman hourly rate specified in the applicable wage determination. Trainees shall be paid fringe benefits in accordance with the provisions of the trainee program. If the trainee program does not mention fringe benefits, trainees shall be paid the full amount of fringe benefits listed on the wage determination unless the Administrator of the Wage and Hour Division determines that there is an apprenticeship program associated with the corresponding journeyman wage rate on the wage determination which provides for less than full fringe benefits for apprentices. Any employee listed on the payroll at a trainee rate who is not registered and participating in a training plan approved by the Employment and Training Administration shall be paid not less than the applicable wage rate on the wage determination for the classification of work actually performed. In addition, any trainee performing work on the job site in excess of the ratio permitted under the registered program shall be paid not less than the applicable wage rate on the wage determination for the work actually performed.

In the event the Employment and Training Administration withdraws approval of a training program, the contractor will no longer be permitted to utilize trainees at less than the applicable predetermined rate for the work performed until an acceptable program is approved.

c. Equal employment opportunity. The utilization of apprentices, trainees and journeymen under this part shall be in conformity with the equal employment opportunity requirements of Executive Order 11246, as amended, and 29 CFR part 30.

d. Apprentices and Trainees (programs of the U.S. DOT).

Apprentices and trainees working under apprenticeship and skill training programs which have been certified by the Secretary of Transportation as promoting EEO in connection with Federal-aid highway construction programs are not subject to the requirements of paragraph 4 of this Section IV. The straight time hourly wage rates for apprentices and trainees under such programs will be established by the particular programs. The ratio of apprentices and trainees to journeymen shall not be greater than permitted by the terms of the particular program.

5. Compliance with Copeland Act requirements. The contractor shall comply with the requirements of 29 CFR part 3, which are incorporated by reference in this contract.

6. Subcontracts. The contractor or subcontractor shall insert Form FHWA-1273 in any subcontracts and also require the subcontractors to include Form FHWA-1273 in any lower tier subcontracts. The prime contractor shall be responsible for the compliance by any subcontractor or lower tier subcontractor with all the contract clauses in 29 CFR 5.5.

7. Contract termination: debarment. A breach of the contract clauses in 29 CFR 5.5 may be grounds for termination of the contract, and for debarment as a contractor and a subcontractor as provided in 29 CFR 5.12.

8. Compliance with Davis-Bacon and Related Act requirements. All rulings and interpretations of the Davis-Bacon and Related Acts contained in 29 CFR parts 1, 3, and 5 are herein incorporated by reference in this contract.

9. Disputes concerning labor standards. Disputes arising out of the labor standards provisions of this contract shall not be subject to the general disputes clause of this contract. Such disputes shall be resolved in accordance with the procedures of the Department of Labor set forth in 29 CFR parts 5, 6, and 7. Disputes within the meaning of this clause include disputes between the contractor (or any of its subcontractors) and the contracting agency, the U.S. Department of Labor, or the employees or their representatives.

10. Certification of eligibility.

a. By entering into this contract, the contractor certifies that neither it (nor he or she) nor any person or firm who has an interest in the contractor's firm is a person or firm ineligible to be awarded Government contracts by virtue of section 3(a) of the Davis-Bacon Act or 29 CFR 5.12(a)(1).

b. No part of this contract shall be subcontracted to any person or firm ineligible for award of a Government contract by virtue of section 3(a) of the Davis-Bacon Act or 29 CFR 5.12(a)(1).

c. The penalty for making false statements is prescribed in the U.S. Criminal Code, 18 U.S.C. 1001.

V. CONTRACT WORK HOURS AND SAFETY STANDARDS ACT

The following clauses apply to any Federal-aid construction contract in an amount in excess of $100,000 and subject to the overtime provisions of the Contract Work Hours and Safety Standards Act. These clauses shall be inserted in addition to the clauses required by 29 CFR 5.5(a) or 29 CFR 4.6. As used in this paragraph, the terms laborers and mechanics include watchmen and guards.

1. Overtime requirements. No contractor or subcontractor contracting for any part of the contract work which may require or involve the employment of laborers or mechanics shall require or permit any such laborer or mechanic in any workweek in which he or she is employed on such work to work in excess of forty hours in such workweek unless such laborer or mechanic receives compensation at a rate not less than one and one-half times the basic rate of pay for all hours worked in excess of forty hours in such workweek.

2. Violation; liability for unpaid wages; liquidated damages. In the event of any violation of the clause set forth in paragraph (1.) of this section, the contractor and any subcontractor responsible therefor shall be liable for the unpaid wages. In addition, such contractor and subcontractor shall be liable to the United States (in the case of work done under contract for the District of Columbia or a territory, to such District or to such territory), for liquidated damages. Such liquidated damages shall be computed with respect to each individual laborer or mechanic, including watchmen and guards, employed in violation of the clause set forth in paragraph (1.) of this section, in the sum of $10 for each calendar day on which such individual was required or permitted to work in excess of the standard workweek of forty hours without payment of the overtime wages required by the clause set forth in paragraph (1.) of this section.

3. Withholding for unpaid wages and liquidated damages. The FHWA or the contacting agency shall upon its own action or upon written request of an authorized representative of the Department of Labor withhold or cause to be withheld, from any moneys payable on account of work performed by the contractor or subcontractor under any such contract or any other Federal contract with the same prime contractor, or any other federally-assisted contract subject to the Contract Work Hours and Safety Standards Act, which is held by the same prime contractor, such sums as may be determined to be necessary to satisfy any liabilities of such contractor or subcontractor for unpaid wages and liquidated damages as provided in the clause set forth in paragraph (2.) of this section.

4. Subcontracts. The contractor or subcontractor shall insert in any subcontracts the clauses set forth in paragraph (1.) through (4.) of this section and also a clause requiring the subcontractors to include these clauses in any lower tier subcontracts. The prime contractor shall be responsible for compliance by any subcontractor or lower tier subcontractor with the clauses set forth in paragraphs (1.) through (4.) of this section.

VI. SUBLETTING OR ASSIGNING THE CONTRACT

This provision is applicable to all Federal-aid construction contracts on the National Highway System.

1. The contractor shall perform with its own organization contract work amounting to not less than 30 percent (or a greater percentage if specified elsewhere in the contract) of the total original contract price, excluding any specialty items designated by the contracting agency. Specialty items may be performed by subcontract and the amount of any such specialty items performed may be deducted from the total original contract price before computing the amount of work required to be performed by the contractor's own organization (23 CFR 635.116).

a. The term "perform work with its own organization" refers to workers employed or leased by the prime contractor, and equipment owned or rented by the prime contractor, with or without operators. Such term does not include employees or equipment of a subcontractor or lower tier subcontractor, agents of the prime contractor, or any other assignees. The term may include payments for the costs of hiring leased employees from an employee leasing firm meeting all relevant Federal and State regulatory requirements. Leased employees may only be included in this term if the prime contractor meets all of the following conditions:

(1) the prime contractor maintains control over the supervision of the day-to-day activities of the leased employees;
(2) the prime contractor remains responsible for the quality of the work of the leased employees;
(3) the prime contractor retains all power to accept or exclude individual employees from work on the project; and
(4) the prime contractor remains ultimately responsible for the payment of predetermined minimum wages, the submission of payrolls, statements of compliance and all other Federal regulatory requirements.

b. "Specialty Items" shall be construed to be limited to work that requires highly specialized knowledge, abilities, or equipment not ordinarily available in the type of contracting organizations qualified and expected to bid or propose on the contract as a whole and in general are to be limited to minor components of the overall contract.

2. The contract amount upon which the requirements set forth in paragraph (1) of Section VI is computed includes the cost of material and manufactured products which are to be purchased or produced by the contractor under the contract provisions.

3. The contractor shall furnish (a) a competent superintendent or supervisor who is employed by the firm, has full authority to direct performance of the work in accordance with the contract requirements, and is in charge of all construction operations (regardless of who performs the work) and (b) such other of its own organizational resources (supervision, management, and engineering services) as the contracting officer determines is necessary to assure the performance of the contract.

4. No portion of the contract shall be sublet, assigned or otherwise disposed of except with the written consent of the contracting officer, or authorized representative, and such consent when given shall not be construed to relieve the contractor of any responsibility for the fulfillment of the contract. Written consent will be given only after the contracting agency has assured that each subcontract is evidenced in writing and that it contains all pertinent provisions and requirements of the prime contract.

5. The 30% self-performance requirement of paragraph (1) is not applicable to design-build contracts; however, contracting agencies may establish their own self-performance requirements.

VII. SAFETY: ACCIDENT PREVENTION

This provision is applicable to all Federal-aid construction contracts and to all related subcontracts.

1. In the performance of this contract the contractor shall comply with all applicable Federal, State, and local laws governing safety, health, and sanitation (23 CFR 635). The contractor shall provide all safeguards, safety devices and protective equipment and take any other needed actions as it determines, or as the contracting officer may determine, to be reasonably necessary to protect the life and health of employees on the job and the safety of the public and to protect property in connection with the performance of the work covered by the contract.

2. It is a condition of this contract, and shall be made a condition of each subcontract, which the contractor enters into pursuant to this contract, that the contractor and any subcontractor shall not permit any employee, in performance of the contract, to work in surroundings or under conditions which are unsanitary, hazardous or dangerous to his/her health or safety, as determined under construction safety and health standards (29 CFR 1926) promulgated by the Secretary of Labor, in accordance with Section 107 of the Contract Work Hours and Safety Standards Act (40 U.S.C. 3704).

3. Pursuant to 29 CFR 1926.3, it is a condition of this contract that the Secretary of Labor or authorized representative thereof, shall have right of entry to any site of contract performance to inspect or investigate the matter of compliance with the construction safety and health standards and to carry out the duties of the Secretary under Section 107 of the Contract Work Hours and Safety Standards Act (40 U.S.C.3704).

VIII. FALSE STATEMENTS CONCERNING HIGHWAY PROJECTS

This provision is applicable to all Federal-aid construction contracts and to all related subcontracts.

In order to assure high quality and durable construction in conformity with approved plans and specifications and a high degree of reliability on statements and representations made by engineers, contractors, suppliers, and workers on Federal-aid highway projects, it is essential that all persons concerned with the project perform their functions as carefully, thoroughly, and honestly as possible. Willful falsification, distortion, or misrepresentation with respect to any facts related to the project is a violation of Federal law. To prevent any misunderstanding regarding the seriousness of these and similar acts, Form FHWA-1022 shall be posted on each Federal-aid highway project (23 CFR 635) in one or more places where it is readily available to all persons concerned with the project:

18 U.S.C. 1020 reads as follows:

"Whoever, being an officer, agent, or employee of the United States, or of any State or Territory, or whoever, whether a person, association, firm, or corporation, knowingly makes any false statement, false representation, or false report as to the character, quality, quantity, or cost of the material used or to be used, or the quantity or quality of the work performed or to be performed, or the cost thereof in connection with the submission of plans, maps, specifications, contracts, or costs of construction on any highway or related project submitted for approval to the Secretary of Transportation; or

Whoever knowingly makes any false statement, false representation, false report or false claim with respect to the character, quality, quantity, or cost of any work performed or to be performed, or materials furnished or to be furnished, in connection with the construction of any highway or related project approved by the Secretary of Transportation; or

Whoever knowingly makes any false statement or false representation as to material fact in any statement, certificate, or report submitted pursuant to provisions of the Federal-aid Roads Act approved July 1, 1916, (39 Stat. 355), as amended and supplemented;

Shall be fined under this title or imprisoned not more than 5 years or both."

IX. IMPLEMENTATION OF CLEAN AIR ACT AND FEDERAL WATER POLLUTION CONTROL ACT

This provision is applicable to all Federal-aid construction contracts and to all related subcontracts.

By submission of this bid/proposal or the execution of this contract, or subcontract, as appropriate, the bidder, proposer, Federal-aid construction contractor, or subcontractor, as appropriate, will be deemed to have stipulated as follows:

1. That any person who is or will be utilized in the performance of this contract is not prohibited from receiving an award due to a violation of Section 508 of the Clean Water Act or Section 306 of the Clean Air Act.
2. That the contractor agrees to include or cause to be included the requirements of paragraph (1) of this Section X in every subcontract, and further agrees to take such action as the contracting agency may direct as a means of enforcing such requirements.

X. CERTIFICATION REGARDING DEBARMENT, SUSPENSION, INELIGIBILITY AND VOLUNTARY EXCLUSION

This provision is applicable to all Federal-aid construction contracts, design-build contracts, subcontracts, lower-tier subcontracts, purchase orders, lease agreements, consultant contracts or any other covered transaction requiring FHWA approval or that is estimated to cost $25,000 or more – as defined in 2 CFR Parts 180 and 1200.

1. **Instructions for Certification – First Tier Participants:**

a. By signing and submitting this proposal, the prospective first tier participant is providing the certification set out below.

b. The inability of a person to provide the certification set out below will not necessarily result in denial of participation in this covered transaction. The prospective first tier participant shall submit an explanation of why it cannot provide the certification set out below. The certification or explanation will be considered in connection with the department or agency's determination whether to enter into this transaction. However, failure of the prospective first tier participant to furnish a certification or an explanation shall disqualify such a person from participation in this transaction.

c. The certification in this clause is a material representation of fact upon which reliance was placed when the contracting agency determined to enter into this transaction. If it is later determined that the prospective participant knowingly rendered an erroneous certification, in addition to other remedies available to the Federal Government, the contracting agency may terminate this transaction for cause of default.

d. The prospective first tier participant shall provide immediate written notice to the contracting agency to whom this proposal is submitted if any time the prospective first tier participant learns that its certification was erroneous when submitted or has become erroneous by reason of changed circumstances.

e. The terms "covered transaction," "debarred," "suspended," "ineligible," "participant," "person," "principal," and "voluntarily excluded," as used in this clause, are defined in 2 CFR Parts 180 and 1200. "First Tier Covered Transactions" refers to any covered transaction between a grantee or subgrantee of Federal funds and a participant (such as the prime or general contract). "Lower Tier Covered Transactions" refers to any covered transaction under a First Tier Covered Transaction (such as subcontracts). "First Tier Participant" refers to the participant who has entered into a covered transaction with a grantee or subgrantee of Federal funds (such as the prime or general contractor). "Lower Tier Participant" refers any participant who has entered into a covered transaction with a First Tier Participant or other Lower Tier Participants (such as subcontractors and suppliers).

f. The prospective first tier participant agrees by submitting this proposal that, should the proposed covered transaction be entered into, it shall not knowingly enter into any lower tier covered transaction with a person who is debarred, suspended, declared ineligible, or voluntarily excluded from participation in this covered transaction, unless authorized by the department or agency entering into this transaction.

g. The prospective first tier participant further agrees by submitting this proposal that it will include the clause titled "Certification Regarding Debarment, Suspension, Ineligibility and Voluntary Exclusion-Lower Tier Covered Transactions," provided by the department or contracting agency, entering into this covered transaction, without modification, in all lower tier covered transactions and in all solicitations for lower tier covered transactions exceeding the $25,000 threshold.

h. A participant in a covered transaction may rely upon a certification of a prospective participant in a lower tier covered transaction that is not debarred, suspended, ineligible, or voluntarily excluded from the covered transaction, unless it knows that the certification is erroneous. A participant is responsible for ensuring that its principals are not suspended, debarred, or otherwise ineligible to participate in covered transactions. To verify the eligibility of its principals, as well as the eligibility of any lower tier prospective participants, each participant may, but is not required to, check the Excluded Parties List System website (https://www.epls.gov/), which is compiled by the General Services Administration.

i. Nothing contained in the foregoing shall be construed to require the establishment of a system of records in order to render in good faith the certification required by this clause. The knowledge and information of the prospective participant is not required to exceed that which is normally possessed by a prudent person in the ordinary course of business dealings.

j. Except for transactions authorized under paragraph (f) of these instructions, if a participant in a covered transaction knowingly enters into a lower tier covered transaction with a person who is suspended, debarred, ineligible, or voluntarily excluded from participation in this transaction, in addition to other remedies available to the Federal Government, the department or agency may terminate this transaction for cause or default.

* * * * *

2. Certification Regarding Debarment, Suspension, Ineligibility and Voluntary Exclusion – First Tier Participants:

a. The prospective first tier participant certifies to the best of its knowledge and belief, that it and its principals:

(1) Are not presently debarred, suspended, proposed for debarment, declared ineligible, or voluntarily excluded from participating in covered transactions by any Federal department or agency;

(2) Have not within a three-year period preceding this proposal been convicted of or had a civil judgment rendered against them for commission of fraud or a criminal offense in connection with obtaining, attempting to obtain, or performing a public (Federal, State or local) transaction or contract under a public transaction; violation of Federal or State antitrust statutes or commission of embezzlement, theft, forgery, bribery, falsification or destruction of records, making false statements, or receiving stolen property;

(3) Are not presently indicted for or otherwise criminally or civilly charged by a governmental entity (Federal, State or local) with commission of any of the offenses enumerated in paragraph (a)(2) of this certification; and

(4) Have not within a three-year period preceding this application/proposal had one or more public transactions (Federal, State or local) terminated for cause or default.

b. Where the prospective participant is unable to certify to any of the statements in this certification, such prospective participant shall attach an explanation to this proposal.

2. **Instructions for Certification - Lower Tier Participants:**

(Applicable to all subcontracts, purchase orders and other lower tier transactions requiring prior FHWA approval or estimated to cost $25,000 or more - 2 CFR Parts 180 and 1200)

a. By signing and submitting this proposal, the prospective lower tier is providing the certification set out below.

b. The certification in this clause is a material representation of fact upon which reliance was placed when this transaction was entered into. If it is later determined that the prospective lower tier participant knowingly rendered an erroneous certification, in addition to other remedies available to the Federal Government, the department, or agency with which this transaction originated may pursue available remedies, including suspension and/or debarment.

c. The prospective lower tier participant shall provide immediate written notice to the person to which this proposal is submitted if at any time the prospective lower tier participant learns that its certification was erroneous by reason of changed circumstances.

d. The terms "covered transaction," "debarred," "suspended," "ineligible," "participant," "person," "principal," and "voluntarily excluded," as used in this clause, are defined in 2 CFR Parts 180 and 1200. You may contact the person to which this proposal is submitted for assistance in obtaining a copy of those regulations. "First Tier Covered Transactions" refers to any covered transaction between a grantee or subgrantee of Federal funds and a participant (such as the prime or general contract). "Lower Tier Covered Transactions" refers to any covered transaction under a First Tier Covered Transaction (such as subcontracts). "First Tier Participant" refers to the participant who has entered into a covered transaction with a grantee or subgrantee of Federal funds (such as the prime or general contractor). "Lower Tier Participant" refers any participant who has entered into a covered transaction with a First Tier Participant or other Lower Tier Participants (such as subcontractors and suppliers).

e. The prospective lower tier participant agrees by submitting this proposal that, should the proposed covered transaction be entered into, it shall not knowingly enter into any lower tier covered transaction with a person who is debarred, suspended, declared ineligible, or voluntarily excluded from participation in this covered transaction, unless authorized by the department or agency with which this transaction originated.

f. The prospective lower tier participant further agrees by submitting this proposal that it will include this clause titled "Certification Regarding Debarment, Suspension, Ineligibility and Voluntary Exclusion-Lower Tier Covered Transaction," without modification, in all lower tier covered transactions and in all solicitations for lower tier covered transactions exceeding the $25,000 threshold.

g. A participant in a covered transaction may rely upon a certification of a prospective participant in a lower tier covered transaction that is not debarred, suspended, ineligible, or voluntarily excluded from the covered transaction, unless it knows that the certification is erroneous. A participant is responsible for ensuring that its principals are not suspended, debarred, or otherwise ineligible to participate in covered transactions. To verify the eligibility of its principals, as well as the eligibility of any lower tier prospective participants, each participant may, but is not required to, check the Excluded Parties List System website (https://www.epls.gov/), which is compiled by the General Services Administration.

h. Nothing contained in the foregoing shall be construed to require establishment of a system of records in order to render in good faith the certification required by this clause. The knowledge and information of participant is not required to exceed that which is normally possessed by a prudent person in the ordinary course of business dealings.

i. Except for transactions authorized under paragraph e of these instructions, if a participant in a covered transaction knowingly enters into a lower tier covered transaction with a person who is suspended, debarred, ineligible, or voluntarily excluded from participation in this transaction, in addition to other remedies available to the Federal Government, the

department or agency with which this transaction originated may pursue available remedies, including suspension and/or debarment.

* * * * *

Certification Regarding Debarment, Suspension, Ineligibility and Voluntary Exclusion--Lower Tier Participants:

1. The prospective lower tier participant certifies, by submission of this proposal, that neither it nor its principals is presently debarred, suspended, proposed for debarment, declared ineligible, or voluntarily excluded from participating in covered transactions by any Federal department or agency.

2. Where the prospective lower tier participant is unable to certify to any of the statements in this certification, such prospective participant shall attach an explanation to this proposal.

* * * * *

XI. CERTIFICATION REGARDING USE OF CONTRACT FUNDS FOR LOBBYING

This provision is applicable to all Federal-aid construction contracts and to all related subcontracts which exceed $100,000 (49 CFR 20).

1. The prospective participant certifies, by signing and submitting this bid or proposal, to the best of his or her knowledge and belief, that:

a. No Federal appropriated funds have been paid or will be paid, by or on behalf of the undersigned, to any person for influencing or attempting to influence an officer or employee of any Federal agency, a Member of Congress, an officer or employee of Congress, or an employee of a Member of Congress in connection with the awarding of any Federal contract, the making of any Federal grant, the making of any Federal loan, the entering into of any cooperative agreement, and the extension, continuation, renewal, amendment, or modification of any Federal contract, grant, loan, or cooperative agreement.

b. If any funds other than Federal appropriated funds have been paid or will be paid to any person for influencing or attempting to influence an officer or employee of any Federal agency, a Member of Congress, an officer or employee of Congress, or an employee of a Member of Congress in connection with this Federal contract, grant, loan, or cooperative agreement, the undersigned shall complete and submit Standard Form-LLL, "Disclosure Form to Report Lobbying," in accordance with its instructions.

2. This certification is a material representation of fact upon which reliance was placed when this transaction was made or entered into. Submission of this certification is a prerequisite for making or entering into this transaction imposed by 31 U.S.C. 1352. Any person who fails to file the required certification shall be subject to a civil penalty of not less than $10,000 and not more than $100,000 for each such failure.

3. The prospective participant also agrees by submitting its bid or proposal that the participant shall require that the language of this certification be included in all lower tier subcontracts, which exceed $100,000 and that all such recipients shall certify and disclose accordingly.

ATTACHMENT A - EMPLOYMENT AND MATERIALS PREFERENCE FOR APPALACHIAN DEVELOPMENT HIGHWAY SYSTEM OR APPALACHIAN LOCAL ACCESS ROAD CONTRACTS

This provision is applicable to all Federal-aid projects funded under the Appalachian Regional Development Act of 1965.

1. During the performance of this contract, the contractor undertaking to do work which is, or reasonably may be, done as on-site work, shall give preference to qualified persons who regularly reside in the labor area as designated by the DOL wherein the contract work is situated, or the subregion, or the Appalachian counties of the State wherein the contract work is situated, except:

a. To the extent that qualified persons regularly residing in the area are not available.

b. For the reasonable needs of the contractor to employ supervisory or specially experienced personnel necessary to assure an efficient execution of the contract work.

c. For the obligation of the contractor to offer employment to present or former employees as the result of a lawful collective bargaining contract, provided that the number of nonresident persons employed under this subparagraph (1c) shall not exceed 20 percent of the total number of employees employed by the contractor on the contract work, except as provided in subparagraph (4) below.

2. The contractor shall place a job order with the State Employment Service indicating (a) the classifications of the laborers, mechanics and other employees required to perform the contract work, (b) the number of employees required in each classification, (c) the date on which the participant estimates such employees will be required, and (d) any other pertinent information required by the State Employment Service to complete the job order form. The job order may be placed with the State Employment Service in writing or by telephone. If during the course of the contract work, the information submitted by the contractor in the original job order is substantially modified, the participant shall promptly notify the State Employment Service.

3. The contractor shall give full consideration to all qualified job applicants referred to him by the State Employment Service. The contractor is not required to grant employment to any job applicants who, in his opinion, are not qualified to perform the classification of work required.

4. If, within one week following the placing of a job order by the contractor with the State Employment Service, the State Employment Service is unable to refer any qualified job applicants to the contractor, or less than the number requested, the State Employment Service will forward a certificate to the contractor indicating the unavailability of applicants. Such certificate shall be made a part of the contractor's permanent project records. Upon receipt of this certificate, the contractor may employ persons who do not normally reside in the labor area to fill positions covered by the certificate, notwithstanding the provisions of subparagraph (1c) above.

5. The provisions of 23 CFR 633.207(e) allow the contracting agency to provide a contractual preference for the use of mineral resource materials native to the Appalachian region.

6. The contractor shall include the provisions of Sections 1 through 4 of this Attachment A in every subcontract for work which is, or reasonably may be, done as on-site work.

ATTACHMENT "G"

BUY AMERICA REQUIREMENTS

Source of Supply – Steel and Iron (Federal Aid Contracts Only): For Federal-aid contracts, the Contractor will only use steel and iron produced in the United States, in accordance with the buy America provisions of 23 CFR 635.410. Contractor will ensure that all manufacturing processes for these materials occur in the United States. A manufacturing process is any process that modifies the chemical content, physical shape, size or final finish of a product, beginning with the initial melding and mixing and continuing through the bending and coating stages. A manufactured steel or iron product is complete only when all grinding, drilling, welding, finishing and coating have been completed. If a domestic product is taken outside the United States for any process, it becomes foreign source material. When using steel and iron as a component of any manufactured product incorporated into the project (*e.g.*, concrete pipe, pre-stressed beams, corrugated steel pipe, etc.), these same provisions apply, except that the manufacturer may use minimal quantities of foreign steel and iron when the cost of such foreign materials does not exceed 0.1% of the compensation or $2,500, whichever is greater. These requirements are applicable to all steel and iron materials incorporated into the finished work, but are not applicable to steel and iron items that the Contractor uses but does not incorporate into the finished work. The Contractor shall provide a certification from the producer of steel or iron, or any product containing steel or iron as a component, stating that all steel or iron furnished or incorporated into the finished product was manufactured in the United States in accordance with the requirements of this provision. Such certification shall also include: (1) a statement that the product was produced entirely within the United States, or (2) a statement that the product was produced with the United States except for minimal quantities of foreign steel and iron and specify the actual value of the product. Each such certification shall be furnished to the AUTHORITY prior to incorporating the material into the project. When FHWA allows the use of foreign steel on a project, Contractor shall furnish invoices to document the costs of such material, and obtain the AUTHORITY'S written approval prior to incorporating the material into the project.

ATTACHMENT "H"

PERFORMANCE AND PAYMENT BOND

BY THIS BOND, WE, _____, Inc., as Principal and _____ a Corporation, as Surety, are bound to the Solid Waste Authority of Palm Beach County, hereinafter referred to as "Authority", in the sum of _____ **Dollars (up to $10,000,000),** for payment of which we bind ourselves, our heirs, personal representatives, successors, and assigns, jointly and severally.

THE CONDITION OF THIS BOND is that if Principal:

1. Performs the Agreement dated _____, 20_____ between Principal and Authority for Proposal of Hurricane/Disaster Debris Removal, Reduction and Disposal, **Agreement No. 22-201,** the Agreement being made a part of this bond by reference, in the time and in the manner prescribed in the Agreement, and;

2. Promptly makes payment to all claimants, as defined in Section 255.05(1), Florida Statutes, supplying Principal with labor, materials and supplies, used directly or indirectly by Principal in the prosecution of the work provided for in the Agreement, and;

3. Pays Authority all loss, damages, expenses, costs, and attorney's fees, including appellate proceedings, that Authority sustains because of a default by Principal under the Agreement, and;

4. Performs the guarantee of all work and materials furnished under the Agreement for the time specified in the Agreement, and;

5. At completion of all work covered by Agreement and Final Payment by Authority to Principal then Principal will replace this Performance and Payment Bond with a Proposal Bond, in the amount of 5% of this Performance and Payment Bond, to be held by the Authority as a guarantee that Principal will provide to the Authority a Performance and Payment Bond in the amount of up to $10,000,000 on the occasion of a subsequent Task Order in accordance with the above referenced Agreement;

then this bond is void; otherwise it remains in full force.

Surety shall be responsible for any and all liquidated damages imposed by the Authority for the referenced Agreement.

Any changes in or under the Agreement Documents and compliance or noncompliance with any formalities connected with the Agreement or the changes does not affect Surety's obligation under this bond. Any increase in the total Agreement amount as authorized by the Authority shall accordingly increase the Surety's obligation by the same dollar amount of said increase. CONTRACTOR shall be responsible for notification to Surety of all such changes.

See subsection (2) of Section 255.05, Florida Statutes as amended for the notice and time limitations for claimants.

Signed and sealed this ____ day of _____, 20____.

PRINCIPAL:_____

By: _____
Signature

WITNESS:

Name: _____

1. _____

Title: _____

2. _____

Address: _____

_____

Telephone: _____

SURETY: _____

By: _____
Signature

WITNESS:

Name: _____

1. _____

Title: _____

2. _____

Address: _____

_____

Telephone: _____

NOTE: Date of Bond must not be prior to date of Agreement. If CONTRACTOR is a Partnership, all partners must execute bond.

IMPORTANT: Surety companies executing bonds **must** appear and remain on the Treasury Department's most current list (Circular 570 as amended) during construction, guarantee and warranty periods, and be authorized to transact business in the State of Florida, and be pre-approved by the Authority.

Village of Palm Springs

Executive Brief

AGENDA DATE: June 9, 2022

DEPARTMENT: Public Works

ITEM #7: Approve Hurricane Debris Removal Agreement (Contract No. 22-201D) - Piggyback - DRC Emergency Services, LLC

SUMMARY: The Village needs to select a vendor to assist with debris removal services that would provide the Village with the immediate ability, following a disaster/storm event, to safely and efficiently clear storm-related debris from public rights-of-way and ensure/provide normal operations for our community as quickly as possible. Additionally, it is recommended that the Village's selection meets the Office of Management and Budget's Procurement Guidelines to ensure eligible funding reimbursement requests are approved by the Federal Emergency Management Agency (FEMA) following a federally declared disaster event. Thus, reducing the potential that the Village will be responsible for the service of debris collection and disposal service costs.

To ensure that the Village selects a vendor that enables the Village to receive eligible federal funding reimbursement(s) following a federally declared disaster event, the staff is recommending that the Village use the Palm Beach County Solid Waste Authority's (SWA) contract that was awarded to DRC Emergency Services, LLC. The selection by the Solid Waste Authority was completed through a competitive bid process - Request of Proposal for Hurricane/Disaster Debris Removal, Reduction, and Disposal (RFP No.22-201/DL - May 8, 2022).

If approved, the Village would use the SWA contract to obtain debris removal services (i.e public rights of way collection, loading, and hauling to a designated site accepting storm debris). DRC Emergency Services, LLC., entered into a 5-year contract with the Solid Waste Authority and meets the federal procurement standards to ensure FEMA compliance to maximize eligible Hurricane-related expense reimbursement for the Village. The Village would accept the pricing of DRC Emergency Services, LLC. by using the Palm Beach County Solid Waste Authority's contracts including all terms, conditions, and pricing therein. The term of these contracts is set to expire on May 7, 2025.

The Village's Purchasing Code, Section 58-9, Accessing contracts of other government agencies, provides that the Village may award a contract by piggybacking or accessing the goods and/or services from any State of Florida contract; contracts of any Florida political subdivision; or from any other governmental entity (other than the Federal government); provided that the same or substantially similar goods and/or services were competitively solicited.

In the event of an emergency event, the Village Manager will select the contractor(s) to utilize from the approved vendors based on the availability of equipment and staff as well as the fee schedule. This authority will be requested as emergency power and the selection(s) will be presented to the Village Council for approval during the next available Council Meeting (following the storm event).

The proposed agreement was prepared by the Village Attorney and reviewed by the Parks and Recreation Director and Public Works Director.

FISCAL IMPACT:

Funding to support a natural disaster/storm event is available within the Village's Reserves and will be requested to be reimbursed by the Federal Emergency Management Agency (FEMA) following a federally declared disaster/storm event.

ATTACHMENTS:

1. DRC Emergency Services - Agreement Signed - Piggyback of SWA 2022
2. RFP No. 22-201/DL - Hurricane/Disaster Debris Removal, Reduction and Disposal - Addendum No. 1 - Solid Waste Authority of Palm Beach County
3. DRC Emergency Services, LLC (2022) - Hurricane Disaster Debris Removal, Reduction and Disposal - Contract
4. RFP No. 22-201/DL - Hurricane/Disaster Debris Removal, Reduction and Disposal - Solid Waste Authority of Palm Beach County

AGREEMENT FOR DISASTER DEBRIS MANAGEMENT SERVICES

This Agreement for disaster debris management and support services ("Agreement" hereafter) is made as of the _____ day of _____, 2022, by and between the **Village of Palm Springs**, 226 Cypress Lane, Palm Springs, Florida 33461-1699, a municipal corporation organized and existing under the laws of the State of Florida, hereinafter referred to as the VILLAGE, and **DRC Emergency Services, LLC**, 6258 Marshall Foch, New Orleans, LA 70124, a company authorized to do business in the State of Florida, hereinafter referred to as the CONTRACTOR.

RECITALS

WHEREAS, the VILLAGE is in need of a contractor to provide the VILLAGE with disaster debris management and support services; and,

WHEREAS, the Solid Waste Authority of Palm Beach County through its competitive selection process awarded a Contract for disaster debris management and support services (22-201/DL) ("SWA Contract" hereafter) to the CONTRACTOR for substantially the same services sought by the VILLAGE; and,

WHEREAS, the VILLAGE requested and the CONTRACTOR has executed this Agreement with the VILLAGE for disaster debris management and support services based on the pricing and terms and conditions of the SWA Contract; and,

WHEREAS, the VILLAGE desires to accept CONTRACTOR's pricing by incorporating the SWA Contract including all terms, conditions and pricing therein into this Agreement.

NOW THEREFORE, in consideration of the mutual promises set forth herein, the receipt and sufficiency of which are hereby acknowledged, the parties hereto agree as follows:

1. Recitals. The parties agree that the recitals set forth above are true and correct and are fully incorporated herein by reference.

2. SWA Contract. The SWA Contract with the CONTRACTOR is hereby expressly made a part of this Agreement as fully as if set forth at length herein. The VILLAGE shall have all rights, obligations and remedies authorized to the Solid Waste Authority of Palm Beach County under the SWA Contract and all associated and applicable Contract Documents as defined therein.

3. Agreement. In accordance with the terms and conditions in the SWA Contract and pricing therein, the CONTRACTOR shall provide disaster debris management and support services as requested by the VILLAGE.

4. Contract Documents and Conflict of Terms and Conditions. The Contract Documents for this Agreement are compromised of the following:

A. All written modifications and amendments hereto;

B. This Agreement;
C. SWA Contract (including the RFP, Contractors Proposal and Contract).

The Contract Documents of this Agreement are intended to be complementary and interpreted in harmony so as to avoid conflict with the words and phrases interpreted in a manner consistent with managing debris removal and industry standards. In the event of any inconsistency, conflict or ambiguity between or among the Contract Documents of this Agreement, the Contract Documents of this Agreement shall take precedence in the following order:

A. All written modifications and amendments hereto;
B. This Agreement;
C. The SWA Contract.

5. Compensation to Contractor. Payments by the VILLAGE to the CONTRACTOR under this Agreement shall not exceed the amount of compensation, on the unit basis, as set forth under the SWA Contract. CONTRACTOR waives consequential or incidental damages for claims, disputes or other matters in question arising out of or relating to this Agreement.

6. Miscellaneous Provisions.

6.1 The VILLAGE and CONTRACTOR each binds itself, its partners, its successors, assigns and legal representatives to the other party hereto, its partners, successors, assigns and legal representatives in respect of all covenants, agreements and obligations contained in the Contract Documents.

6.2 CONTRACTOR shall maintain the insurance as required in SWA Contract applicable to the goods and services being delivered hereunder. Said insurance will name the VILLAGE as an additional insured.

6.3 Headings and References & Exhibits: The headings contained in this Agreement are inserted for convenience of reference only and shall not be a part or control or affect the meaning hereof. All references herein to Exhibits are to the exhibits hereto, each of which shall be incorporated into and deemed to be a part of this Agreement.

6.4 Counterparts: This Contract may be executed in two or more counterparts, each of which shall be deemed to be an original, but all of which shall be deemed to be an original, but each of which together shall constitute one and the same instrument.

6.5 Entire Agreement; Amendment and Waiver: This Agreement (together with the Exhibits hereto) supersedes any and all prior negotiations and oral or written agreements heretofore made relating to the subject matter hereof and, except for written agreements, if any, executed and delivered simultaneously with or subsequent to the date of this Agreement, constitutes the entire agreement of the parties relating to the subject matter hereof. This Agreement may not be altered or amended except by a writing signed by the parties hereto. No waiver of any of the terms or conditions of this Agreement shall be effective unless in writing and executed by the party to be changed therewith. No waiver

of any condition or of the breach of any term, covenant, representation, warranty or other provision hereof shall be deemed to be construed as a further or continuing waiver of any such condition or breach or a waiver of any other condition or of any breach of any other term, covenant, representation, warranty or other provision contained in this Agreement.

6.6 Successors and Assigns: This Agreement shall be binding upon, and shall inure to the benefit of the parties hereto and their respective successors and assigns.

6.7 Governing Law; Consent to Jurisdiction: This Agreement shall be governed by and construed and interpreted in accordance with the laws of the State of Florida. Each of the parties hereto (a) irrevocably submit itself to the exclusive jurisdiction of the Fifteenth Judicial Circuit Court in and for Palm Beach County, Florida for state actions and jurisdiction of the United States District Court for the Southern District of Florida, Palm Beach Division, for the purposes of any suit, action or other proceeding arising out of, or relating to, this Agreement; (b) waives and agrees not to assert against any party hereto, by way of motion, as a defense of otherwise, in any suit, action or other proceeding, any claim that it is not personally subject to the jurisdiction of the above-named courts for any reason whatsoever; and (ii) to the extent permitted by applicable law, any claim that such suit, action or proceeding by any part hereto is brought in an inconvenient forum or that the venue of such suit, action or proceeding is improper or that this Agreement or the subject matter hereof may not be enforced in or by such courts.

6.8 Third Party Beneficiary rights: This Agreement shall create no rights or claims whatsoever in any person other than a party herein.

6.9 Severability: If any one or more of the provisions of the Agreement shall be held to be invalid, illegal or unenforceable in any respect, the validity, legality and enforceability of the remaining provisions hereof shall not in any way be affected or impaired thereby.

6.10 Effective date, term and renewal: The effective date of this Agreement is the date the Agreement is approved by the Village Council. The term of this Agreement shall be for an initial term to mirror the SWA Contract term which shall expire on May 7, 2022, unless terminated sooner. The SWA Contract is subject to a one year renewal and if renewed the VILLAGE also has the right to renew this Agreement for a one year period.

6.11 Public Records: Public Records: CONTRACTOR shall comply with Florida's Public Records Act, Chapter 119, Florida Statutes, and, if determined to be acting on behalf of the VILLAGE as provided under section 119.011(2), Florida Statutes, specifically agrees to:

(a) Keep and maintain public records required by the VILLAGE to perform the service.

(b) Upon request from the VILLAGE's custodian of public records or designee, provide the VILLAGE with a copy of the requested records or allow the records to be inspected or copied within a reasonable time at a cost that does not exceed the cost provided in Chapter 119, Florida Statutes, or as otherwise provided by law.

(c) Ensure that public records that are exempt or confidential and exempt from public records disclosure requirements are not disclosed except as authorized by law for the duration of this Agreement and following completion of this Agreement if the CONTRACTOR does not transfer the records to the VILLAGE.

(d) Upon completion of this Agreement, transfer, at no cost, to the VILLAGE all public records in possession of the CONTRACTOR or keep and maintain public records required by the VILLAGE to perform the service. If the CONTRACTOR transfers all public records to the VILLAGE upon completion of the Agreement, the CONTRACTOR shall destroy any duplicate public records that are exempt or confidential and exempt from public records disclosure requirements. If the CONTRACTOR keeps and maintains public records upon completion of the Agreement, the CONTRACTOR shall meet all applicable requirements for retaining public records. All records stored electronically must be provided to the VILLAGE, upon request from the VILLAGE's custodian of public records or designee, in a format that is compatible with the information technology systems of the VILLAGE.

IF THE CONTRACTOR HAS QUESTIONS REGARDING THE APPLICATION OF CHAPTER 119, FLORIDA STATUTES, TO THE CONTRACTOR'S DUTY TO PROVIDE PUBLIC RECORDS RELATING TO THIS AGREEMENT, CONTACT THE CUSTODIAN OF PUBLIC RECORDS OR DESIGNEE AT 561-434-5084, jworth@vpsfl.org, OR BY MAIL AT VILLAGE OF PALM SPRINGS, 226 CYPRESS LANE, PALM SPRINGS, FL 33461.

6.12 Preparation: This Agreement shall not be construed more strongly against either party regardless of who was more responsible for its preparation.

6.13 PALM BEACH COUNTY IG: In accordance with Palm Beach County ordinance number 2011-009, the CONTRACTOR acknowledges that this Agreement may be subject to investigation and/or audit by the Palm Beach County Inspector General. The CONTRACTOR has reviewed Palm Beach County ordinance number 2011-009 and is aware of its rights and/or obligations under such ordinance.

6.14 All notices required in this Agreement shall be sent by certified mail, return receipt requested, and sent to the addresses appearing on the first page of this Agreement.

6.15 The VILLAGE is exempt from payment of Florida State Sales and Use Tax. The CONTRACTOR shall not be exempted from paying sales tax to its suppliers for materials used to fill contractual obligations with the VILLAGE, nor is the CONTRACTOR authorized to use the VILLAGE'S Tax Exemption Number in securing such materials.

7. Indemnification. CONTRACTOR shall indemnify and hold harmless the VILLAGE in the same manner as provided in the SWA Contract as it relates to the indemnification of the Solid Waste Authority of Palm Beach County.

8. Agreement Administration. Services of the CONTRACTOR shall be under the general direction of the Village Manager, or his/her designee, who will act as the VILLAGE'S representative during the term of the Agreement.

9. E-Verify Pursuant to Section 448.095(2), Florida Statutes, effective January 1, 2021, the CONTRACTOR shall:

9.1 Register with and use the E-Verify system to verify the work authorization status of all newly hired employees and require all subcontractors (providing services or receiving funding under this Agreement) to register with and use the E-Verify system to verify the work authorization status of all the subcontractors' newly hired employees;

9.2 Secure an affidavit from all subcontractors (providing services or receiving funding under this Agreement) stating that the subcontractor does not employ, contract with, or subcontract with an "unauthorized alien" as defined in Section 448.095(1)(k), Florida Statutes;

9.3 Maintain copies of all subcontractor affidavits for the duration of this Agreement and provide the same to the Owner upon request;

9.4 Comply fully, and ensure all of its subcontractors comply fully, with Section 448.095, Florida Statutes;

9.5 Be aware that a violation of Section 448.09, Florida Statutes (Unauthorized aliens; employment prohibited) shall be grounds for termination of this Agreement; and,

9.6 Be aware that if the VILLAGE terminates this Agreement under Section 448.095(2)(c), Florida Statutes, the CONTRACTOR may not be awarded a contract for at least one (1) year after the date on which the Agreement is terminated and will be liable for any additional costs incurred by the VILLAGE as a result of the termination of the Agreement.

IN WITNESS WHEREOF, the VILLAGE and CONTRACTOR have caused this Agreement to be executed the day and year shown above.

VILLAGE OF PALM SPRINGS, FLORIDA

By: _____
Bev Smith, Mayor

ATTEST

_____
Kimberly Wynn, Village Clerk

Approved as to form and legal sufficiency:

_____
Glen J. Torcivia, Village Attorney

CONTRACTOR: **DRC EMERGENCY SERVICES, LLC**

By: _____

Print Name: Kristy Fuentes

Title: Vice President, Secretary, Treasurer

[Corporate Seal]

STATE OF ~~FLORIDA~~ LOUISIANA)
COUNTY OF Jefferson Parish)

The foregoing instrument was acknowledged before me this 12TH day of May, ~~2017~~ 2022 by Kristy Fuentes, as VP/Secretary/Treasurer of DRC Emergency Services, LLC, a company authorized to do business in the State of Florida, and who is personally known to me or who has produced the following _____ as identification.

Notary Public

_____
Print Name: Cecelia Morise
My commission expires: at death

CECELIA MORISE
Notary Public - State of Louisiana
Notary ID Number 157893

YOUR PARTNER FOR
SOLID WASTE SOLUTIONS

ADDENDUM NO. 1

HURRICANE/DISASTER DEBRIS REMOVAL, REDUCTION AND DISPOSAL

RFP No. 22-201/DL **February 9, 2022**

This Addendum to the specifications and contract documents is issued to provide additional information and clarification to the original RFP's scope of services and proposal form and is hereby declared a part of the original scope of services and contract documents. In case of a conflict, this Addendum shall govern.

PROPOSERS shall acknowledge receipt of this Addendum by inserting this Addendum Number and Date issued within Proposal Form 1 – Transmittal Letter located within the original RFP document. Failure to do so may be cause for the PROPOSER to be rendered as non-responsive.

REMINDER:

SUBMISSION DUE DATE: FEBRUARY 18, 2022

SUBMISSION DEADLINE: 2:00PM

VIA NEGOMETRIX

1. The following are questions received prior to the deadline on Tuesday, February 7, 2022:

   Q.1: Section 11 – Bond Requirements, Sections A & B, provide the guidance for providing all bonds. For clarification purposes, section A states that the proposer must submit an Irrevocable Letter of Commitment from an A-or better-rated Surety Company to provide a $10,000,000 Performance & Payment Bond. Section B discusses when the Performance and Payment bond is to be provided to the Authority; when that time comes, will the Performance and Payment Bond need to be in the amount of $10,000,000, or will it be based on the estimated value of the project at that time?

   A.1: Please refer to Article 40 of the sample contract.

   Q.2: Can you please provide the names and titles of the Evaluation Committee members?

   A.2: Dr. Lori Vinikoor, Citizens' Advisory Committee Chair
   Patrick Carroll, Chief Operations Officer
   Mariana Feldpausch, CIS Operations Manager
   Colleen Robbs, Director of Equal Business Opportunity Office
   David Broten, Environmental Programs Manager

   Q.3: Could you clarify if the pricing provided for removing hazardous trees 12" in diameter or greater is for cutting the trees and placing them in the right-of-way to be collected as vegetative debris, or is it for the cutting, loading & hauling of the hazardous trees?

   A.3: Please refer to attached revised page REV16, Section 2.6.2.1.

   Q.4: Section 2.6.4 Securing Debris – Are we to understand that all loads of debris en route to a TDMS must be tarped or covered in some manner?

   A.4: Please refer to the attached revised pages REV19 and REV 20.

Q.5: Proposal Form 3 Pricing Proposal – Tipping fees are usually billed by the Contractor separately, at cost, with no markup; however, Line Item 4 calls for the rate to include disposal cost; by this, do you mean to include any tipping fees in our proposed rate?

A.5: Proposal Form 3 – Price Proposal, Part A, Item 4.0 requires the Proposer to include the disposal/recycling cost per cubic yard for the final destination of reduced yard waste debris. This rate and the final destination plan for wood chips is required under Part III, Proposal Submission Requirements, Section 3.2.6 General Operations Plan, Item 1, Mulch Disposal Plan.

Q.6: RFP Part II – Statement of Work states in Section 2.6.2.1 that the Authority will not compensate the Contractor for leaning trees less than 12" in diameter on a unit rate basis. Yet, Proposal Form 3 requests pricing for Hazardous Tree Removal and Hauling with one size category being 6" to 12.99" in diameter. Could you please clarify?

A.6: Please refer to attached revised page REV 16.

Q.7: On pg 34 it states that "PROPOSER who submits the Proposal with the lowest Total Proposal Price will receive 20 points." Can the Authority please confirm this is referring to the Total Proposed Price on Part A of the RFP Proposal Form 3?

A.7: Yes, Proposer with the lowest Total Proposal Price from Proposal Form 3 - Price Proposal, Part A, will receive 20 points.

Q.8: Will the Authority weigh the unit rate line items in Part A and C of the RFP Proposal Form 3 more heavily than the hourly rate line items in Part B of the RFP Proposal Form 3?

A.8: Proposal Form 3 – Price Proposal Total Proposal Price will be weighed for the Evaluation of Price Proposal as per page 32 of RFP.

Q.9: We are curious why the Authority did not apply an Affirmative Procurement Initiative to this procurement requiring S/M/WBE participation. Could you provide insight?

A.9: All work performed under this contract is to be in conformance with FEMA guidelines. These guidelines prohibit the use of locally based S/M/WBE programs. The Solid Waste Authority system is a locally based system and therefore, cannot be applied to this procurement. The Authority does encourage the use of S/M/WBE vendors in section 3.8.2 (C) of the RFP.

Q.10: Bonding Requirements: Regarding bonding requirements: Per Page 4, paragraph B of the RFP, the proposal bond must be in effect until any active-duty periods when the payment and performance bonds will take the place of proposal bond. Please clarify if the proposal bond must stay in effect for the entire 3-year term and possible 3-year renewal term even if the contract is never activated?

Page 4, paragraph A of the RFP states that the Proposer must submit an "Irrevocable Letter of Commitment" with the Proposal Bond "upon issuance of first Task Order. Given the amount/cost of bond and the length of the term, would the SWA be willing to revise the bonding requirement to read "letter of bonding ability" or "letter of bonding capacity" instead of "irrevocable letter of commitment"?

A.10: Yes, the proposal bond must stay in effect for the entire 3-year term and possible 3-year extension if the contract is never activated.

There will be no change to the irrevocable letter of commitment requirement.

Q.11: TDMS Bonus Points: How far away is a TDMS that would be eligible for the bonus points?

A.11: Please refer to attached revised page REV 29.

Q.12: Haul out of Ash: 1. There is currently a line item (5.0) for reduction of vegetation through air curtain incineration. Will the Authority consider adding a line item for haul out of ash to a final disposal site? 2. If no, under what line item should this be included? 3. If a new line item is added, can the Authority confirm it will be responsible for disposal fees for ash?

A.12: Please refer to the attached revised page REV 39.

Q.13: RFP: Please confirm the entire RFP does not need to be included in our proposal submittal.
A.13: It is solely at the Proposer's discretion as to the documents considered as proposal submittal.

2. **Pages 16, 19, 20, and 29, of the RFP have been revised and are hereby attached as REV 16, REV 19, REV 20, and REV 29.**

3. **PROPOSAL FORM 3 – PRICE PROPOSAL PART A AND PART C have been revised and is hereby attached as REV 39 and REV 41.**

ALL ELSE REMAINS THE SAME

Diane LeRay

Diane LeRay, CPPO, CPPB
Procurement Manager

2.6.2.1 Removal of Hazardous Leaning Trees and Hanging Limbs

a) Under this contract, work shall consist of all labor, equipment, fuel, and miscellaneous costs necessary to remove all hazardous trees six inches (6") or greater in diameter, measured four and a half feet (4.5') from the base of the tree or chest height and hanging limbs two inches (2") or greater in diameter existing in private and public right-of-way. Further, debris generated from the removal of hazardous trees and hanging limbs two inches (2") or greater existing in private and public right-of-way will be placed at the public right-of-way for removal as vegetative debris in accordance with Proposal Form 3, Price Proposal, Part A, Item 1.0A. Hazardous leaning trees less than six inches (6") in diameter, measured four and a half feet (4.5') from the base of the tree or at chest height, will be flush cut, and placed on the public right-of-way to be removed as vegetative debris. The AUTHORITY will not compensate the CONTRACTOR for leaning trees less than six inches (6") in diameter on a unit rate basis.

b) Removal and transportation of hazardous trees six inches (6") or greater in diameter and hanging limbs two inches (2") or greater in diameter existing in private and public right-of-way will be performed as identified by the AUTHORITY. All disaster specific eligibility guidelines regarding size and diameter of leaning trees will be communicated to the CONTRACTOR, in writing, by the AUTHORITY. In order for leaning or hazardous trees to be removed and eligible for reimbursement, the tree must satisfy a minimum of one (1) of the following requirements:

i) The tree is leaning in excess of 30° degrees in a direction that poses an immediate threat to public health, welfare, and safety.
ii) The tree is dead, twisted, or mangled as a direct result of the storm and a certified arborist can attest to the fact that the tree will die and potentially create a falling hazard to the public.

2.6.2.2 Removal of Hazardous Stumps

a) Under this contract, work shall consist of all labor, equipment, fuel, and miscellaneous costs necessary to remove all hazardous uprooted stumps 24 inches or greater in diameter, measured 24 inches from the base of the tree existing in private and public right-of-way. Further, debris generated from the removal of uprooted stumps existing in private and public right-of-way will be placed at the public right-of-way for removal as vegetative debris. Stumps measured 24 inches from the base of the tree and less than 24 inches in diameter will be considered normal vegetative debris and removed in accordance with with Proposal Form 3, Price Proposal, Part A, Item 1.0A. The AUTHORITY will not compensate hazardous stumps less than 24 inches in diameter on a unit rate basis and instead will be considered normal vegetative debris. The diameter of stumps less than 24 inches will be converted into a cubic yardage volume based on the published FEMA stump conversion table (In accordance with current FEMA public assistance guidelines) and removed under the terms and conditions of 2.6.2.

to be filled to capacity. Cyclone fence may be used as temporary tailgates if they comply with the following specifications:

1. Fencing must be permanently attached to one side of the truck bed.
2. After loading, the fencing must be tied to the other side of the truck bed at two places with heavy gauge wire.
3. Fencing must extend to the bottom of the bed.
4. After loading, bottom of fencing shall be tight against the bed of the truck and secured at a minimum of two locations.
5. Solid iron metal bars must be secured to both sides of the fencing.
6. There shall be no hand loaded equipment allowed.

B. The AUTHORITY or designee shall complete certifications indicating the type of vehicle, make and model, license plate number, equipment number, and measured maximum volume, in cubic yards, of the load bed of each piece of equipment utilized to haul debris. The measured volume of each piece of equipment shall be calculated from actual internal physical measurement performed and certified by the CONTRACTOR. Maximum volumes may be rounded up to the nearest cubic yard. The reported measured maximum volume of any load bed shall be the same as shown on the placards affixed to each piece of equipment. The AUTHORITY reserves the right to re-measure trucks and trailers at any time to verify reported capacity. If a truck and/or trailer are re-measured and the yardage capacity is determined to be lower, the lower yardage volume will be retroactive to the initial load and total volume adjusted accordingly.

C. All trucks and trailers utilized in hauling debris shall be equipped with a tailgate that will permit the vehicle to be loaded to capacity and effectively contain the debris on the vehicle while hauling. If installed, all sideboard extensions must remain in place throughout the operation, or the vehicle must be re-measured and remarked. All extensions to the bed are subject to acceptance or rejection at the sole discretion of the AUTHORITY or designee.

D. Trucks or equipment designated for use under this Agreement shall not be used for any other work during working hours. The CONTRACTOR shall not solicit work from private citizens or others to be performed in the designated Collection Service Area during the period of this Agreement. Under no circumstance will the CONTRACTOR mix debris hauled for others with debris hauled under this Agreement. Failure to comply will result in no payment to CONTRACTOR and the operator and vehicle will be declared ineligible to provide any additional emergency debris collection services. Any and all unapproved changes to placard will result in no payment to CONTRACTOR and the operator and vehicle will be declared ineligible to perform any additional emergency debris collection services.

2.6.4 Securing Debris

The CONTRACTOR shall be responsible for properly and adequately securing debris on each piece of equipment utilized to haul debris. Prior to leaving the loading site, the CONTRACTOR shall ensure that each load is secure and trimmed so that no debris extends horizontally beyond the bed of the equipment in any direction. All loose debris shall be reasonably compacted during loading and secured during transport.

2.6.5 Equipment Signage

Prior to commencing operations, the AUTHORITY or designee shall affix to each piece of equipment, signs or markings indicating the Owner Operator's name and a unique equipment identification number. One sign shall be placed on each side of the equipment. For those trucks, trailers and other equipment intended to haul debris, the maximum volume, in cubic yards, of the load bed shall also be shown. Each operator shall keep AUTHORITY certification with them at all times. Placards must remain on both sides of equipment.

2.6.6 Other Considerations

A. The CONTRACTOR shall assign and provide an Operations Manager (OM) to the AUTHORITY TDMS to serve as the principal liaison between the AUTHORITY Director, Customer Services or designee and the CONTRACTOR'S forces. The assigned OM must be knowledgeable of all facets of the CONTRACTOR'S operations and have authority in writing to commit the CONTRACTOR. The OM shall be on call 24 hours per day, seven (7) days per week and shall have electronic linkage capability for transmitting and receiving relevant contractual information and make arrangements for onsite accommodations. This linkage shall provide immediate contact via cell phone, Fax machine, and have Internet capabilities. The OM will participate in daily meetings and disaster exercises, functioning as a source to provide essential element information. The OM will report to the AUTHORITY Director, Customer Services or designee. This position will not require constant presence; rather the OM will be required to be physically capable of responding to the AUTHORITY Emergency Management Coordinator within 30 minutes of notification.

B. The CONTRACTOR shall be responsible for control of pedestrian and vehicular traffic in the work area. At a minimum, one flag person should be posted at each approach to the work area.

C. The CONTRACTOR shall supervise and direct the work, using skilled labor and proper equipment for all tasks. Safety of the CONTRACTOR'S personnel and equipment is the responsibility of the CONTRACTOR. Additionally, the CONTRACTOR shall pay for all materials, personnel, taxes, and fees necessary to perform under the terms of this contract.

D. Payment for debris hauled will be based on the quantity of debris hauled in cubic yards. Debris hauled to a TDMS will require a validated load ticket. Drivers will be given an electronic load tickets at the loading site by an AUTHORITY loading site monitor. The quantity of debris hauled will be estimated in cubic yards at the TDMS by an AUTHORITY TDMS monitor. The estimated quantity will be recorded on the electronic load ticket. The AUTHORITY TDMS monitor will retain one copy of the paper load ticket and the driver will retain the remaining copies of the load ticket. Debris being hauled to

3.2.5 Experience and Qualifications Narrative

PROPOSER shall demonstrate the following:

A. Provide a comprehensive description of all mobilizations (minimum of three) performed as a prime contractor for disaster debris services collecting and processing a minimum of 1 million cubic yards of debris collected from public right of ways. PROPOSERS unable to identify three or more mobilizations meeting the 1 million cubic yard threshold, per each mobilization, are requested to submit all relevant experience they have that documents the ability to perform the services (right of way collection and TDMS management) as requested by this RFP. No limitation exists for the period of time a PROPOSER may go back to describe the experience as requested. Do not show work performed as a sub-contractor. **(PROPOSAL FORM 6 - FORM A)**

   For each mobilization the PROPOSER is requested to identify the following:

   - Name and type of storm event
   - Date and location
   - Narrative of disaster debris services of work performed during mobilization event
   - Total value of contract for services performed
   - Number of cubic yards of debris collected by PROPOSER from public right of ways during mobilization
   - Number of cubic yards of debris handled by PROPOSER at TDMS during mobilization
   - Name, address, and telephone number of customers point of contact for reference purposes.

B. List all emergency debris removal and disposal contracts performed in the last three (3) years as a prime contractor. **(PROPOSAL FORM 6 - FORM B)**

3.2.6 General Operations Plan

PROPOSER shall provide the following:

1. At a minimum a detailed Mulch Disposal Plan. The AUTHORITY is committed to recycling and or beneficial re-use of mulch. Additional consideration will be taken for Beneficial Re-Use Plan. PROPOSER is required to provide a full description of how PROPOSER intends to dispose and or re-use one million (1,000,000) cubic yards of mulch. PROPOSER is required to address how PROPOSER intends to comply with all federal, state, and local guidelines pertaining to mulch disposal. PROPOSER is also required to submit any agreement(s) he/she currently has for the disposal and or beneficial re-use of mulch. PROPOSER is required to give a full description of their end use plan.

2. At a minimum a detailed TMDS Plan pertaining to Construction Debris (C & D) Recycling and or Reduction for estimated five hundred thousand (500,000) cubic yards. The AUTHORITY requests that PROPOSER implements a recycling and/or reduction program for C & D material to minimize amount of debris that will go to a landfill. PROPOSER is requested to address programs they will implement to facilitate recycling and or reduction of construction debris waste.

3. Resumes for the PROPOSER'S management team and all key personnel who will be assigned to the agreement to include, among other things: names, job titles, responsibilities, and applicable debris management experience.

4. Provide private TDMS available for use within Palm Beach County. Provide letters of agreements with the owners for use of such sites. Identify the location of the sites and site

PROPOSAL FORM 3 – PRICE PROPOSAL

PART A – VOLUME BASED PRICING FOR 3,000,000 CUBIC YARD (CY) DEBRIS DISASTER

ITEM/DESCRIPTION	ESTIMATED QUANTITY	UNIT	PRICE PER CY	EXTENSION
1.0 Public Property and Right of Way Collection, Loading and Hauling to a designated TDMS.				
A. Vegetation	2,500,000	CY		
B. Construction Debris / Mixed Debris	500,000	CY		
2.0 TDMS operation to include placement of monitoring towers, portable toilets, keeping on-site and adjacent roads area clean of trash and garbage, debris acceptance, pile management, and Phase I Reclamation.	3,000,000	CY		
3.0 Processing of debris through grinding and/or chipping.	2,500,000	CY		
4.0 Loading, hauling and disposing wood chips to final destination. ***(This rate includes disposal cost)***	1,000,000	CY		
5.0 Loading and hauling of construction debris and/or mixed debris from TDMS to a permitted C&D recycling facility or any other designated Disposal Facility. ***(This rate <u>shall not</u> include disposal cost). Based on miles from TDMS to final destination– 1 way.***				
A. 0 ≤ 20 miles	500,000	CY		
B. > 20 ≤ 50 miles	500,000	CY		
C. > 50 ≤ 100 miles	500,000	CY		
AVERAGE: (Item 6.0 A-C)				
AVERAGE: (Item 5.0 A-C) **X 500,000** CY =				$
TOTAL PROPOSAL PRICE: (Items 1.0 - 5.0)				$

PROPOSER MUST PROVIDE PRICE FOR ALL LINE ITEMS 1 THRU 6. FAILURE TO DO SO MAY RENDER YOUR PROPOSAL TO BE DEEMED NON-RESPONSIVE.

Unit Prices, unless otherwise indicated, shall include all labor (operators, laborers, supervisors) and materials including but not limited to: supplies, equipment maintenance, repairs, repair parts, fuels, lubricants, cellular phones, transportation, and housing, if required, necessary to accomplish the project. The quantities and distributions are estimated for the purpose of making an award. Locations of sites, debris quantities, destinations, material densities, etc. may differ substantially in an actual disaster.

Assumptions: 3,000,000 cubic yards of debris consisting of 2,500,000 cubic yards of vegetation debris and 500,000 cubic yards of mixed debris.

PROPOSAL FORM 3 – PRICE PROPOSAL

PART C – UNIT COST SCHEDULE

ITEM	HAZARDOUS STUMP REMOVAL, HAULING, AND DISPOSAL	UNIT	UNIT COST
1.	24-inch diameter to 48.99-inch diameter	Stump	
2.	49-inch diameter and greater	Stump	
3.	Stump Fill Dirt – Fill dirt for stump holes after removal	CY	
	HAZARDOUS HANGING LIMBS (HANGERS) To include removal of all hanging limbs. Limbs to be cut and placed on the right of way for collection as vegetative debris.		
4.	2-inch diameter and greater	Tree	
	HAZARDOUS TREE REMOVAL Trees to be flush cut at ground level and placed on the right of way for removal as vegetative debris.		
5.	6-inch diameter to 11.99-inch diameter	Tree	
6.	12-inch diameter to 23.99-inch diameter	Tree	
7.	24-inch diameter to 35.99-inch diameter	Tree	
8.	36-inch diameter to 47.99-inch diameter	Tree	
8.	48-inch diameter and greater	Tree	

NOTE:
The following is information only and will NOT be considered in the evaluation of this RFP

The AUTHORITY reserves the right to use this contract to handle small quantities of debris removal and as support for our Franchise Contracts as needed. Below is a daily rate to remove debris. The AUTHORITY will pay for the disposal cost. There is no requirement to provide a rate, however if you do, we expect your company to honor this special service and respond within 48 hours at the rate below.

COLLECTION SERVICE ONLY	
EQUIPMENT	DAILY RATE (10 HRS/DAY)
Knuckleboom Loader and Operator	$

YOUR PARTNER FOR
SOLID WASTE SOLUTIONS

AGREEMENT FOR

HURRICANE/DISASTER DEBRIS REMOVAL, REDUCTION AND DISPOSAL

BETWEEN

SOLID WASTE AUTHORITY OF PALM BEACH COUNTY

AND

DRC EMERGENCY SERVICES, LLC

AGREEMENT NO. 22-201D

SOLID WASTE AUTHORITY OF PALM BEACH COUNTY
7501 NORTH JOG ROAD
WEST PALM BEACH, FLORIDA 33412
(561) 640-4000

TABLE OF CONTENTS

ARTICLE		PAGE
1.	Effective Date and Incorporation of Recitals	1
2.	Services to be performed by Contractor	1
3.	Compensation	1
4.	Insurance	2
5.	Standard of Care	3
6.	Indemnification	3
7.	Independent Contractor	3
8.	Authority to Conduct Business	4
9.	Compliance with Laws	4
10.	Sub-Contractor	4
11.	Federal and State Taxes	4
12.	Availability of Funds	4
13.	Authority's Responsibilities	4
14.	Default	4
15.	Termination for Convenience	5
16.	Uncontrollable Forces	5
17.	Jurisdiction, Venue, Waiver of Jury Trial and Remedies	5
18.	Commercial Non-Discrimination Policy	6
19.	Waiver	6
20.	Severability	6
21.	Entirety of Agreement and Modification	6
22.	Successors and Assigns	7
23.	Contingent Fees	7
24.	Truth-in-Negotiation Certificate	7
25.	Ownership of Documents	7
26.	Public Records, Access and Audits	7
27.	Inspector General	9
28.	Notice	9
29.	Contract Administration	10
30.	Key Personnel	10
31.	Equal Business Opportunity Program	10
32.	Scrutinized Companies	10
33.	Agreements with other Governmental Entities	11
34.	Third Party Beneficiary Disclaimer	11
35.	E-Verify – Employment Eligibility	11
36.	Confidentiality	12
37.	Payment Adjustment Schedule	12
38.	Order of Agreement Activation/Location Assignment	13
39.	Task Order/Performance	13
40.	Bonds	13
41.	Florida Highway Administration (FHWA) Form 1273	14
42.	Buy America Requirements	14
43.	Disadvantaged Business Enterprises	14
44.	Certification Regarding Suspension and Debarment	15
45.	Access to Records and Their Retention	15
46.	Audit Requirements	16
47.	National Environmental Policy Act (NEPA)	16

48. Americans with Disabilities Act 16
49. Compliance with Title VI, Title VII and other Federal Laws and Regulations 16
50. Convict Labor Prohibition 16
51. Certification Regarding Lobbying Activities 16
52. DHS Seal, Logo, and Flags 16
53. No Obligation by Federal Government 16
54. Program Fraud and False or Fraudulent Statement or Related Acts 17
Contract Execution 18

EXHIBITS

A. Scope of Work 19
B. Fee Schedule 36

ATTACHMENTS

A. Task Order Disaster Debris Management 39
B. Pre-Approved Temporary Debris Management Sites Map 40
C. Public Assistance Program and Policy Guide 41
D. Mobilization Schedule 42
E. FHWA Form 1273 43
F. Buy America Requirements 55
G. Performance and Payment Bond 56

AGREEMENT FOR PROFESSIONAL SERVICES

This Agreement is made and entered into as of APRIL 25th, 2022, (hereinafter referred to as the Agreement) by and between **Solid Waste Authority of Palm Beach County**, a dependent special district created by Chapter 2001-331, Laws of Florida, as amended, (hereinafter referred to as AUTHORITY) and **DRC Emergency Services, LLC** (hereinafter referred to as CONTRACTOR and when referred to collectively with AUTHORITY, the Parties), a Corporation, whose Federal Employer ID Number is **63-1283729**;

Whereas, in accordance with the AUTHORITY's Request for Proposals No. 22-201/DL, solicited to employ the services of the CONTRACTOR for the purpose of providing Hurricane/Disaster Debris Removal, Reduction and Disposal, and;

Whereas, CONTRACTOR represents it is qualified, capable and prepared to provide such services.

Now, therefore, in consideration of the promises contained herein and other good and valuable consideration, the receipt of which is acknowledged by the other, the parties hereto agree as follows:

ARTICLE 1 - EFFECTIVE DATE AND INCORPORATION OF RECITALS

The foregoing recitals are hereby incorporated herein by reference.

1.1 The Effective Date of this Agreement shall be **May 8, 2022** and the Initial Term of this Agreement is for three (3) years and shall expire on **May 7, 2025,** unless terminated earlier as provided for herein.

1.2 The AUTHORITY shall have the option of extending this Agreement for three (3) additional years, as approved by the AUTHORITY's Board or designee, in its sole and unfettered discretion, on the same terms and conditions. Such extension shall be in the form of a written Amendment to the Agreement executed by both Parties.

1.3 The continuance of this Agreement from year-to-year is contingent upon successful annual recertification of the CONTRACTOR's capabilities. The recertification process will be a review of the fiscal (bankruptcy, etc.), logistical (equipment availability, etc.), and moral (conviction for environmental crime, conviction for crime against a public entity, etc.) responsibility of the CONTRACTOR and a determination by the AUTHORITY, based on this review, of whether or not the CONTRACTOR continues to be a viable firm to provide the services described in this Agreement.

ARTICLE 2 - SERVICES TO BE PERFORMED BY CONTRACTOR

CONTRACTOR shall perform the services as specifically stated in the Scope of Work, attached hereto and made a part hereof as Exhibit A, and/or as may be specifically designated and authorized by the AUTHORITY. Such authorizations will be referred to as Task Orders. Each Task Order shall set forth a specific scope of services, rate/amount of compensation, completion date, and other pertinent details of the task being authorized. The AUTHORITY, by virtue of this Agreement, gives the CONTRACTOR no guarantee of any work/services or any specific amount of work/services that may be accomplished during the period this Agreement is in full force and effect.

ARTICLE 3 - COMPENSATION

3.1 The AUTHORITY shall pay CONTRACTOR in accordance with the Fee Schedule, attached hereto and made a part hereof as Exhibit B. In addition, the Parties may negotiate a lump sum or not-to-exceed amount on a per-project basis on an individual Task Order.

3.2 The CONTRACTOR shall submit semi-monthly invoices for services rendered. All invoices must reference the Task Order number. Invoices shall include a statement of progress and appropriate audit quality detail to satisfy the Federal Emergency Management Agency (FEMA) requirements.

3.3 Payment of CONTRACTOR by AUTHORITY is not contingent upon the AUTHORITY being reimbursed by the Federal Emergency Management Agency (FEMA). Payment to CONTRACTOR will be made for any work directed by the AUTHORITY which is determined by Federal and State agencies to be ineligible for reimbursement.

3.4 Payment of invoices shall be within thirty (30) days after receipt of a correct, fully documented invoice. All invoices shall be delivered to:

Solid Waste Authority of Palm Beach County
7501 North Jog Road
West Palm Beach, Florida 33412
Attn: Accounts Payable

3.5 CONTRACTOR will clearly mark its final/last billing with the words "Final Invoice". This will certify that all services have been fully performed under this Agreement and that all charges and costs have been invoiced to the AUTHORITY. Thereupon, this account will be closed and any additional charges or costs, not included in the Final Invoice, shall be waived by CONTRACTOR. The AUTHORITY shall not be liable for the payment of any such additional charges or costs not included in the Final Invoice.

3.6 The AUTHORITY will retain 5% of the payment under each Task Order until such time as the entire project is completed to the AUTHORITY's satisfaction and all subcontractors and any material suppliers verify that they have been paid.

ARTICLE 4 - INSURANCE

4.1 During the performance of the Services under this Agreement, CONTRACTOR shall maintain the following insurance policies written by an insurance company authorized to do business in Florida and acceptable to the AUTHORITY.

1. **General Liability** Insurance with bodily injury limits of not less than $1,000,000 for each occurrence, and with property damage limits of not less than $1,000,000 for each occurrence.

2. **Automobile Liability** Insurance with bodily injury limits of not less than $5,000,000 for each person and not less than $5,000,000 for each accident and with property damage limits of not less than $5,000,000 for each accident.

3. **Workers' Compensation** Insurance in accordance with statutory requirements and Employer's Liability Insurance with limits of not less than $500,000 for each accident, $500,000 for each disease, and $500,000 aggregate.

4. **Excess Liability** Insurance with limits of not less than $10,000,000 for each occurrence and annual aggregate.

4.2 Deductible amounts shall not exceed 5% of the total amount of required insurance in each category. Should any policy contain any unusual exclusions, said exclusions shall be so indicated on the certificate(s) of insurance.

4.3 CONTRACTOR shall furnish AUTHORITY **Certificates of Insurance**, which shall include a provision that policy cancellation, non-renewal or reduction of coverage will not be effective until at least **thirty (30) days**

after written notice has been given to the AUTHORITY. CONTRACTOR shall include AUTHORITY as an **Additional Insured** on the General Liability and Automobile Liability insurance policy required by this Agreement. All of CONTRACTOR'S subcontractors shall be required to include AUTHORITY and CONTRACTOR as **Additional Insureds** on all of their liability insurance policies.

4.4 CONTRACTOR shall ensure that CONTRACTOR's naming of the AUTHORITY as an additional insured on its General Liability and Automobile Liability insurance policies pursuant to this Agreement shall afford coverage for the negligent, reckless, intentionally wrongful or willful acts of CONTRACTOR and other persons employed or utilized by the CONTRACTOR in the performance of this Agreement.

4.5 In the event that subcontractors used by the CONTRACTOR do not have insurance, or do not meet the required insurance limits herein, CONTRACTOR shall indemnify and hold harmless the AUTHORITY for any claim(s) in excess of the subcontractor's insurance coverage.

4.6 The CONTRACTOR shall not commence work under this Agreement until all insurance required as stated herein has been obtained and such insurance has been approved by the AUTHORITY.

ARTICLE 5 - STANDARD OF CARE

5.1 The CONTRACTOR shall exercise the same degree of care, skill, and diligence in the performance of the Services performed pursuant to this Agreement as is ordinarily provided by comparable, qualified professionals under similar circumstances. The CONTRACTOR shall, at no additional cost to AUTHORITY, re-perform services which fail to satisfy the foregoing standard of care.

5.2 The CONTRACTOR warrants that all services shall be performed by skilled and competent personnel to the highest professional standards in the field.

ARTICLE 6 - INDEMNIFICATION

6.1 GENERAL

Having considered the risks and potential liabilities that may exist during the performance of the services and in consideration of the promises included herein, AUTHORITY and CONTRACTOR agree to allocate such liabilities in accordance with this Article 6.

6.2 INDEMNIFICATION

The CONTRACTOR shall indemnify and hold harmless the AUTHORITY, and its officers and employees, from all liabilities, damages, losses, and costs, including, but not limited to, reasonable attorney's fees, to the extent caused by the negligence, recklessness, or intentionally wrongful conduct of the CONTRACTOR and other persons employed or utilized by the CONTRACTOR in the performance of the Agreement.

6.3 SURVIVAL

Upon completion of all services, obligations and duties provided for in this Agreement, or in the event of termination of this Agreement for any reason, the terms and conditions of this Article shall survive.

ARTICLE 7 - INDEPENDENT CONTRACTOR

7.1 The CONTRACTOR is, and shall be, in the performance of all work services and activities performed under this Agreement, an Independent Contractor, and not an employee, agent, or servant of the AUTHORITY. All persons engaged in any of the work or services performed pursuant to this Agreement shall at all times, and in all places, be subject to the CONTRACTOR'S sole direction, supervision, and control. The CONTRACTOR shall exercise control over the means and manner in which it and its employees perform the work, and in all respects the CONTRACTOR'S relationship and the relationship of its employees to the

AUTHORITY shall be that of an Independent Contractor and not as employees or agents of the AUTHORITY.

7.2 The CONTRACTOR does not have the power or authority to bind the AUTHORITY in any promise, agreement or representation other than specifically provided for in this Agreement.

ARTICLE 8 - AUTHORITY TO CONDUCT BUSINESS

The CONTRACTOR hereby represents and warrants that it has and will continue to maintain all licenses and approvals required to conduct its business and perform all requirements in this Agreement.

ARTICLE 9 - COMPLIANCE WITH LAWS

In performance of the Services, the CONTRACTOR will comply with applicable regulatory requirements including federal, state, special district, and local laws, rules, regulations, orders, codes, criteria, and standards.

ARTICLE 10 - SUB-CONTRACTING

10.1 The AUTHORITY reserves the right, in its sole and unfettered discretion, to accept the use of a subcontractor or to reject the selection of a particular subcontractor under this Agreement.

10.2 If a subcontractor fails to perform or make progress, as required by this Agreement, and it is necessary to replace the subcontractor to complete the work in a timely fashion, the CONTRACTOR shall promptly do so, subject to acceptance of the new subcontractor by the AUTHORITY.

ARTICLE 11 - FEDERAL AND STATE TAXES

The AUTHORITY is exempt from Federal Tax and State Sales and Use Taxes. Upon request, the AUTHORITY will provide an exemption certificate to CONTRACTOR. The CONTRACTOR shall not be exempted from paying sales tax to its suppliers for materials to fulfill contractual obligations with the AUTHORITY, nor shall the CONTRACTOR be authorized to use the AUTHORITY'S Tax Exemption Number in securing such materials.

ARTICLE 12 - AVAILABILITY OF FUNDS

The obligations of the AUTHORITY under this Agreement are subject to the availability of funds lawfully appropriated for its purpose by the Board of the Solid Waste Authority of Palm Beach County.

ARTICLE 13 - AUTHORITY'S RESPONSIBILITIES

AUTHORITY shall be responsible for providing access to all project sites, and providing information on hand required by CONTRACTOR, including existing reports, studies, financial information, and other required data that are available in the files of the AUTHORITY.

ARTICLE 14 - DEFAULT

14.1 The AUTHORITY may, by written notice of default to the CONTRACTOR, terminate the Agreement in whole or in part if the CONTRACTOR: a) fails to satisfactorily perform any provisions of this Agreement; or b) fails to make progress so as to endanger performance under the terms and conditions of this Agreement; or c) repeatedly fails to perform; or d) does not remedy any such failure within a period of ten (10) days (or such period as the Director of Purchasing Services may authorize in writing) after receipt of notice from the Director of Purchasing Services specifying such failure. In the event the AUTHORITY terminates this Agreement in whole or in part because of default of the CONTRACTOR, the AUTHORITY may, in its sole

and unfettered discretion, procure goods and/or services similar to those required under this Agreement and the CONTRACTOR shall be liable for any excess costs incurred due to this action.

14.2 If it is determined that the CONTRACTOR was not in default or that the default was excusable (e.g., failure due to causes beyond the control of, or without the fault or negligence of the CONTRACTOR), the rights and obligations of the parties shall be those provided in Article 15 – Termination for Convenience.

ARTICLE 15 – TERMINATION FOR CONVENIENCE

15.1 The Director of Purchasing Services may, whenever the interests of the AUTHORITY so require, terminate this Agreement, in whole or in part, for the convenience of the AUTHORITY. The Director of Purchasing Services shall give five (5) business days prior written Notice of Termination to the CONTRACTOR, specifying the portions of the Agreement to be terminated and when the termination is to become effective. If only portions of the Agreement are terminated, the CONTRACTOR has the right to withdraw, without adverse action by the AUTHORITY, from the entire Agreement.

15.2 Unless directed differently in the Notice of Termination, the CONTRACTOR shall incur no further obligations in connection with the terminated work and shall stop work to the extent specified on the date given in the Notice of Termination. Additionally, unless directed differently, the CONTRACTOR shall terminate outstanding orders and/or subcontracts related to the terminated work.

15.3 Unless the CONTRACTOR is in breach of this Agreement, the CONTRACTOR shall be paid for services rendered to the AUTHORITY'S satisfaction through the date of termination specified in the Notice of Termination.

ARTICLE 16 - UNCONTROLLABLE FORCES

16.1 Neither the AUTHORITY nor CONTRACTOR shall be considered to be in default of this Agreement if delays in or failure of performance shall be due to Uncontrollable Forces, the effect of which, by the exercise of reasonable diligence, the non-performing party could not avoid. The term "Uncontrollable Forces" shall mean any event which results in the prevention or delay of performance by a party of its obligations under this Agreement and which is beyond the reasonable control of the nonperforming party. It includes, but is not limited to fire, flood, earthquakes, storms, lightning, epidemic, pandemic, war, riot, civil disturbance, sabotage, and governmental actions.

16.2 Neither party shall, however, be excused from performance if nonperformance is due to forces which are preventable, removable, or remediable and which the nonperforming party could have, with the exercise of reasonable diligence, prevented, removed or remedied with reasonable dispatch. The non-performing party shall, within a reasonable time of being prevented or delayed from performance by an uncontrollable force, give written notice to the other party describing the circumstances and uncontrollable forces preventing continued performance of the obligations of this Agreement.

ARTICLE 17 – JURISDICTION, VENUE, WAIVER OF JURY TRIAL AND REMEDIES

This Agreement shall be governed by the laws of the State of Florida. Any and all legal action necessary to enforce the Agreement shall be in a State court of competent jurisdiction located exclusively in Palm Beach County. With the exception of the choice of law and venue provisions contained herein, no remedy conferred upon any party is intended to be exclusive of any other remedy, and each and every such remedy shall be cumulative and shall be in addition to every other remedy given hereunder or now or hereafter existing at law or in equity. No single or partial failure by any party to exercise any right, power, or remedy hereunder, shall preclude that party from exercising that right, power or remedy in the future. **THE AUTHORITY AND CONSULTANT FREELY AND VOLUNTARILY AGREE TO WAIVE ITS RESPECTIVE RIGHT TO A JURY TRIAL ON ANY ISSUE(S) SO TRIABLE.**

ARTICLE 18 – COMMERCIAL NON-DISCRIMINATION POLICY

As a condition of entering into this Agreement, the CONTRACTOR represents and warrants that it will comply with the AUTHORITY's Commercial Non-Discrimination Policy, as described in Section 6.3 of the AUTHORITY's Purchasing Manual, including subsequent amendments thereto, if any. As part of such compliance, the CONTRACTOR shall not discriminate on the basis of race, color, religion, ancestry or national origin, gender, age, marital status, familial status, sexual orientation, gender identity or expression, disability, or genetic information in the solicitation, selection, hiring or commercial treatment of subcontractors, vendors, suppliers, or commercial customers, nor shall the CONTRACTOR retaliate against any person for reporting instances of such discrimination. The CONTRACTOR shall provide equal opportunity for subcontractors, vendors and suppliers to participate in all of its public sector and private sector subcontracting and supply opportunities, provided that nothing contained in this clause shall prohibit or limit otherwise lawful efforts to remedy the effects of marketplace discrimination that have occurred or are occurring in the AUTHORITY's relevant marketplace in Palm Beach County. The CONTRACTOR understands and agrees that a material violation of this clause shall be considered a material breach of this Agreement and may result in termination of this Agreement, disqualification or debarment of the CONTRACTOR from participating in AUTHORITY contracts, or other sanctions. This clause is not enforceable by or for the benefit of, and creates no obligation to, any third party. The CONTRACTOR agrees and understands that the provisions of Section 6.3 of the AUTHORITY's Purchasing Manual are incorporated herein by reference and that the CONTRACTOR is familiar with the contents of same.

ARTICLE 19 - WAIVER

A waiver by either AUTHORITY or CONTRACTOR of any breach of this Agreement shall not be binding upon the waiving party unless such waiver is in writing. In the event of a written waiver, such a waiver shall not affect the waiving party's rights with respect to any other or further or subsequent breach. The making or acceptance of a payment by either party with knowledge of the existence of a default or breach shall not operate or be construed to operate as a waiver of any further or subsequent default or breach.

ARTICLE 20 - SEVERABILITY

20.1 The invalidity, illegality, or unenforceability of any provision of this Agreement, or the occurrence of any event rendering any portion or provision of this Agreement void, shall in no way affect the validity or enforceability of any other portion or provision of the Agreement. Any void provision shall be deemed severed from the Agreement and the balance of the Agreement shall be construed and enforced as if the Agreement did not contain the particular portion or provision held to be void. The parties further agree to reform the Agreement to replace any stricken provision with a valid provision that comes as close as possible to the intent of the stricken provision.

20.2 The provisions of this section shall not prevent the entire Agreement from being void if a provision which is of the essence of the Agreement is determined to be void.

ARTICLE 21 - ENTIRETY OF AGREEMENT AND MODIFICATION

The AUTHORITY and the CONTRACTOR agree that this Agreement, including Exhibits and Attachments, and any matters incorporated by specific reference set forth the entire agreement between the parties, and that there are no promises or understandings other than those stated herein. This Agreement supersedes all prior agreements, contracts, proposals, representations, negotiations, letters or other communications between the AUTHORITY and CONTRACTOR pertaining to the services, whether written or oral. None of the provisions or terms and conditions contained in this Agreement may be added to, amended, modified, superseded or otherwise altered except by written instrument executed by the parties thereto.

ARTICLE 22 - SUCCESSORS AND ASSIGNS

AUTHORITY and CONTRACTOR each binds itself and its partners, successors, executors, administrators, assigns and legal representatives to the other party and its partners, successors, executors, administrators, assigns and legal representative. CONTRACTOR shall not assign this Agreement without the prior express written approval of the AUTHORITY in its sole discretion via executed amendment.

ARTICLE 23 - CONTINGENT FEES

The CONTRACTOR warrants that it has not employed or retained any company or person, other than a bona fide employee working solely for the CONTRACTOR to solicit or secure this Agreement and that it has not paid or agreed to pay any person, company, corporation, individual or firm, other than a bona fide employee working solely for the CONTRACTOR, any fee, commission, percentage, gift or any other consideration contingent upon or resulting from the award or making of this Agreement.

ARTICLE 24 - TRUTH-IN-NEGOTIATION CERTIFICATE

24.1 Execution of this Agreement by the CONTRACTOR shall act as the execution of a truth-in-negotiation certificate certifying that the wage rates and costs used to determine the compensation provided for in this Agreement are accurate, complete, and current as of the Effective Date of the Agreement.

24.2 The said rates and costs shall be adjusted to exclude any significant sums should the AUTHORITY determine that the rates and costs were increased due to inaccurate, incomplete or noncurrent wage rates or due to inaccurate representations of fees paid to outside consultants. The AUTHORITY shall exercise its rights under this 'Certificate" within one (1) year following payment.

ARTICLE 25 - OWNERSHIP OF DOCUMENTS

CONTRACTOR shall be required to cooperate with other consultants relative to providing information requested in a timely manner and in the specified form. Any and all documents, records, disks, original drawings, or other information shall become the property of the AUTHORITY for its use and/or distribution as may be deemed appropriate by the AUTHORITY in its sole and unfettered discretion.

ARTICLE 26 - PUBLIC RECORDS, ACCESS AND AUDITS

26.1 It is the intent of this Article to maintain compliance with the Florida Public Records Law, Ch. 119, Florida Statutes, as amended.

26.2 **DESIGNATED RECORDS CUSTODIAN CONTACT INFORMATION:**

IF THE CONTRACTOR HAS QUESTIONS REGARDING THE APPLICATION OF CHAPTER 119, FLORIDA STATUTES, THE CONTRACTOR'S DUTY TO PROVIDE PUBLIC RECORDS RELATING TO THIS AGREEMENT, CONTACT THE CUSTODIAN OF PUBLIC RECORDS AT:
RECORDS MANAGER
SOLID WASTE AUTHORITY OF PALM BEACH COUNTY
7501 NORTH JOG ROAD
WEST PALM BEACH, FL 33412
561-640-4000 EXT. 4606
RECORDSCUSTODIAN@SWA.ORG

26.3 The CONTRACTOR shall maintain records related to all charges, expenses, and costs incurred in estimating and performing the work, in accordance with the timeframes and classifications for records retention as per the General Records Schedule GS1-SL for State and Local Government Agencies (see: https://dos.myflorida.com/library-archives/records-management/general-records-schedules/) after completion or termination of this Contract. Upon AUTHORITY'S request, CONTRACTOR shall provide AUTHORITY with access to such records during normal business hours at a location within Palm Beach County for purposes of inspection or audit.

26.4 Notwithstanding anything herein to the contrary, the CONTRACTOR expressly acknowledges that: i) it is providing a specific service to the AUTHORITY in the performance of this Contract; ii) acting on behalf of the AUTHORITY in the performance of this Contract; iii) that it has read and is familiar with the Florida Public Records Law, Ch. 119, Florida Statutes, as amended, and both understand its responsibility and obligation to comply with this law; and iv) to the extent any question(s) arise regarding its duties to produce public records, it shall contact the Records Manager with same.

26.5 Any public records requests directed to, or related in any way to this contract shall be directed solely to the Records Manager. If the requested records are not in the possession of the Records Manager, they shall immediately notify the CONTRACTOR and the CONTRACTOR must provide the records or allow access to the records within a reasonable time. A CONTRACTOR who fails to provide the records to the public agency within a reasonable time may be subject to penalties under Florida Statutes (F.S) §119.10, and §119.10(2) provides that a person who willfully and knowingly violates the Public Records Act commits a misdemeanor of the first degree, which is punishable by up to a year in jail and a fine not to exceed $1,000.

26.6 Therefore, the CONTRACTOR is required to:

1) Keep and maintain public records that ordinarily and necessarily would be required by the AUTHORITY in order to perform the service;

2) Upon AUTHORITY's request from the AUTHORITY's Records Manager; provide the AUTHORITY with a copy of the requested records to allow the records to be inspected or copied within a reasonable time on the same terms and conditions that the AUTHORITY would provide the records at a cost that does not exceed the cost provided by Florida law;

3) Ensure that public records that are exempt or confidential and exempt from public records disclosure requirements are not disclosed except as authorized by law for the duration of the Agreement term and following the completion of the Agreement if the CONTRACTOR does not transfer the records to the AUTHORITY; and

4) Upon completion of the Agreement, transfer at no cost to the AUTHORITY, all public records in possession of the CONTRACTOR or keep and maintain public records to the AUTHORITY upon completion or termination of the Agreement; the CONTRACTOR shall destroy any duplicate public records that are exempt or confidential and exempt from public records disclosure requirements. If the CONTRACTOR keeps and maintains public records upon completion of the Agreement, the CONTRACTOR shall meet all applicable requirements for retaining public records. All records stored electronically must be provided to the AUTHORITY, upon request from the AUTHORITY's Records Manager, either during performance of the Agreement or after termination or completion of the Agreement in a format that is compatible with the information technology systems of the AUTHORITY.

26.7 Failure of the CONTRACTOR to comply with these requirements shall be a material breach of this Contract.

26.8 CONTRACTOR shall maintain financial and program records to justify all charges and costs incurred in performing the work for at least three (3) years following final payment by the AUTHORITY as Federal Emergency Management Agency (FEMA) sub-grantee as required by 2 CFR 200.333. The AUTHORITY shall have access to such books, records, and documents as required in this section for the purpose of inspection or audit.

26.9 In the event records retention requirements in Florida Statutes Chapter 119 and 257 exceed those of FEMA, the records shall be retained to comply with the State of Florida requirements.

ARTICLE 27 - INSPECTOR GENERAL

Palm Beach County has established the Office of the Inspector General (OIG), Ordinance No. 2009-049 which is authorized and empowered to review past, present and proposed county contracts, transactions, accounts and records. The AUTHORITY has entered into an Interlocal Agreement (ILA) for Inspector General Services. This agreement provides for the Inspector General to provide services to the AUTHORITY in accordance with the authority, functions and powers set out in the Palm Beach County Office of Inspector General Ordinance. All parties doing business with the AUTHORITY and receiving AUTHORITY funds shall fully cooperate with the Inspector General including providing access to records relating to this agreement. The Inspector General has the power to subpoena witnesses, administer oaths, require the production of records, and audit, investigate, monitor, and inspect the activities of the CONTRACTOR, its officers, agents, employees, and lobbyists in order to ensure compliance with contract specifications and detect corruption and fraud. Failure to cooperate with the Inspector General or interference or impeding any investigation shall be in violation of Ordinance 2009-049, and punished pursuant to Section 125.69, Florida Statutes, in the same manner as a second-degree misdemeanor.

ARTICLE 28 - NOTICE

Any notice, demand, communication, or request required or permitted hereunder shall be in writing and delivered in person or sent by certified mail, postage prepaid as follows:

AS TO AUTHORITY

Solid Waste Authority of Palm Beach County
7501 North Jog Road
West Palm Beach, Florida 33412

Attention: Executive Director
Office No.: 561-640-4000 Fax No.: 561-640-3400

AS TO CONTRACTOR

DRC Emergency Services, LLC
111 Veterans Boulevard
Suite 401
Metairie, LA. 70005

Attention: Kristy Fuentes, Vice President/Secretary/Treasurer
Office No.: 888-721-4372 Fax No.: 504-482-2852 E-Mail: kfuentes@drcusa.com

Notices shall be effective when received at the addresses as specified above. Changes in the respective addresses to which such notice is to be directed may be made from time to time by either party by written notice to the other

party. Facsimile transmission is acceptable notice effective when received, however, facsimile transmissions received (i.e.; printed) after 5:00 p.m. or on weekends or holidays, will be deemed received on the next business day. The original of the notice must additionally be mailed as required herein.

Nothing contained in this Article shall be construed to restrict the transmission of routine communications between representatives of CONTRACTOR and AUTHORITY.

ARTICLE 29 - CONTRACT ADMINISTRATION

Services of CONTRACTOR shall be under the general direction of the **Chief Operations Officer**, or designee, who shall act as the AUTHORITY'S representative during the term of the Agreement.

ARTICLE 30 - KEY PERSONNEL

CONTRACTOR shall notify AUTHORITY in the event of key personnel changes which might affect this Agreement. Notification shall be made within ten (10) days of said changes. AUTHORITY has the right to reject any proposed changes in key personnel. The following personnel shall be considered key personnel:

Kristy Fuentes – Vice President of Compliance and Administration
Cell No.: 504-220-7682 E-Mail: kfuentes2drcusa.com

Evan Fancher – Regional Manager
Cell No.: 205-478-6400 E-Mail: efancher@drcusa.com

Lisa Garcia Walsh – Contract Manager
Cell No.: 504-715-9052 E-Mail: lwalsh@drcusa.com

Mark Stafford – Vice President of Response and Recovery
Cell No.: 504-415-7945 E-Mail: mstafford@drcusa.com

Joe Newman– Vice President of Operations
Cell No.: 214-930-9300 E-Mail: jnewman@drcusa.com

John Sullivan – President
Cell No.: 832-713-8234 E-Mail: jsullivan@drcusa.com

ARTICLE 31 – EQUAL BUSINESS OPPORTUNITY PROGRAM:

The Governing Board of the AUTHORITY has implemented the Economic Inclusion Policy administered by the Equal Business Opportunity (EBO) Program Office to ensure that all segments of its business population, including, but not limited to local, small, minority, and women-owned businesses, have an equitable opportunity to participate in the AUTHORITY'S procurement process, in accordance with Section 6.1 through 6.4 of the Purchasing Manual. Program tools and solicitation incentives are hereby referred to as the Affirmative Procurement Initiatives (API).

31.1 **Affirmative Procurement Initiative (API):**

The AUTHORITY has NOT applied an Affirmative Procurement Initiative to this Agreement.

ARTICLE 32 - SCRUTINIZED COMPANIES

32.1 As provided in F.S. 287.135, by entering into this Agreement or performing any work in furtherance hereof, the CONTRACTOR certifies that it, its affiliates, suppliers, subcontractors and consultants who will perform hereunder, have not been placed on the Scrutinized Companies With Activities in Sudan List or Scrutinized

Companies With Activities in The Iran Petroleum Energy Sector List created pursuant to F.S. 215.473, or is engaged in business operations in Cuba or Syria.

If the AUTHORITY determines, using credible information available to the public, that a false certification has been submitted by CONTRACTOR, this Agreement may be terminated and a civil penalty equal to the greater of $2 million or twice the amount of this Agreement shall be imposed, pursuant to F.S. 287.135. Said certification must also be submitted at the time of renewal of this Agreement.

32.2 As provided in F.S. 287.135, by entering into this Agreement or performing any work in furtherance hereof, this Agreement certifies that it, its affiliates, suppliers, subcontractors, and consultants who will perform hereunder, have not been placed on the Scrutinized Companies that Boycott Israel List, or is engaged in a boycott of Israel, pursuant to F.S. 215.4725.
If the AUTHORITY determines, using credible information available to the public, that a false certification has been submitted by CONTRACTOR, this may be terminated and a civil penalty equal to the greater of $2 million or twice the amount of this shall be imposed, pursuant to F.S. 287.135. Said certification must also be submitted at the time of renewal of this Agreement.

ARTICLE 33 - AGREEMENTS WITH OTHER GOVERNMENTAL ENTITIES

33.1 The CONTRACTOR agrees that this Agreement constitutes an offer to all State and local government agencies of the State of Florida under the same terms and conditions, for the same prices and for the same effective period as specified in this Agreement should the CONTRACTOR deem it in the best interest of their business to do so.

33.2 The Agreement in no way restricts or interferes with any State or local government agencies of the State of Florida from re-solicitation.

ARTICLE 34 – THIRD PARTY BENEFICIARY DISCLAIMER

It is not the intention of these documents to create third party beneficiary status in any person or entity that is not a direct party to this Agreement, and no language in this Agreement should be construed or interpreted as creating a third party beneficiary.

ARTICLE 35 – E-VERIFY – EMPLOYMENT ELIGIBILITY

35.1 The CONTRACTOR certifies, warrants and represents that it is in compliance with Section 448.095, Florida Statutes, as may be amended and that CONTRACTOR shall: (1) register with and use the E-Verify System (E-Verify.gov) to electronically verify the employment eligibility of all newly hired workers; and (2) has verified that all of the CONTRACTOR'S subcontractors performing the duties and obligations of this Agreement are registered with and use the E-Verify System to electronically verify the employment eligibility of all newly hired workers. CONTRACTOR shall obtain from each of its subcontractors an affidavit stating that the subcontractor does not employ, contract with, or subcontract with an Unauthorized Alien, as that term is defined in Section 448.095(1)(k), Florida Statutes, as may be amended. CONTRACTOR shall maintain a copy of any such affidavit from a subcontractor for, at a minimum, the duration of the subcontract and any extension thereof. This provision shall not supersede any provision of this Agreement which requires a longer retention period.

35.2 AUTHORITY shall terminate this Agreement if it has a good faith belief that CONTRACTOR has knowingly violated Section 448.09(1), Florida Statutes, as may be amended. If AUTHORITY has a good faith belief that one of CONTRACTOR'S subcontractor(s) has knowingly violated Section 448.09(1), Florida Statutes, as may be amended, AUTHORITY shall notify CONTRACTOR to terminate its contract with the subcontractor and CONTRACTOR shall immediately terminate its contract with the subcontractor. If AUTHORITY terminates this Agreement pursuant to the above, CONTRACTOR shall be barred from being awarded a future contract by AUTHORITY for a period of one (1) year from the date on which the

Agreement was terminated. In the event of such contract termination, CONTRACTOR shall also be liable for any additional costs incurred by AUTHORITY as a result of the termination.

ARTICLE 36 – CONFIDENTIALITY

No reports, information, computer programs, documentation, and/or data given to, or prepared or assembled by the CONTRACTOR under this Agreement shall be made available to any individual or organization by the CONTRACTOR without prior written approval of the AUTHORITY.

ARTICLE 37 – PAYMENT ADJUSTMENT SCHEDULE

37.1 The AUTHORITY acknowledges the fluctuating nature of prices.

37.2 Annual Non-Fuel: The Non-Fuel Adjustment shall be applied to those rates subject to adjustment and as provided within this Agreement. For the purpose of this Agreement, the Non-Fuel component is assumed to represent 90% of the CONTRACTOR's costs. Therefore, 90% of the approved rates shall be so adjusted:

The rates shall be adjusted as follows:

The rates shall be adjusted annually, commencing on the first anniversary date, by the change in the Water and Sewer and Trash Collection Services Index, Series ID CUSR0000SEHG, as published by the United States Department of Labor, Bureau of Labor Statistics (www.bls.gov). The change in the index shall be calculated by dividing the average of the index over the twelve-month period ending the December preceding the effective date of the adjustment (January – December 2022) by the average of the index over the twelve-month period from January 2021 through December 2021. The first Annual Non-Fuel adjustment shall be effective May 7, 2023 to May 6, 2024.

For example:

For the Contract year beginning May 7, 2023, the average of the index over the twelve-month period from January 2022 through December 2022 shall be divided by the average of the index over the twelve-month period from January 2021 through December 2021, multiplying the result by ninety (90) percent of the contract or AUTHORITY established price, and subtracting ninety (90) percent of the contract or AUTHORITY established price.

The surcharge/credit shall be rounded to the nearest cent.

Formula:

Most Recent Year Average / Prior Year Average x .90 x Rate – (.90 x Rate) = Annual Adjustment

Calendar:

Annual Payment Adjustment Calendar

April 2023	April 2024

Extension Clause Annual Payment Adjustment Schedule

April 2025	April 2026	April 2027

37.3 **Activation Fuel Adjustment (Fuel Surcharge/Credit)**

The rates subject to adjustment shall be subject to a fuel price surcharge/credit for fluctuations in the price of fuel. For the purpose of this Agreement, fuel is assumed to represent 10% of the Contractor's costs therefore 10% of the approved rates shall be so adjusted. Fuel adjustment shall be calculated and effective upon activation.

The rates shall be adjusted as follows:

For the rates subject to adjustment, a fuel surcharge/credit shall be charged/credited basis based on the percentage change in the average price of fuel as published by the Oil Price Information Service (OPIS) and measured by the OPIS Standard Rack, OPIS No. 2 Distillate Gross Prices, Unbranded Average for Miami, Florida between the month of **January 2022 (Base)** and the most recent month available upon activation.

Fuel Adjustment does not use a floor or ceiling and provides adjustments in either direction without limit.

The surcharge/credit shall be rounded to the nearest cent.

Formula:

Most recent OPIS (at activation) / Base x .10 x Rate – (.10 x Rate) = Fuel Adjustment (for duration of activation)

For example:

Should activation occur October 2023, the fuel surcharge/credit shall be calculated by dividing the reported unbranded average price for September 2023 by the Base (unbranded average price for January 2022), multiplying the result by ten (10) percent of the contract or Authority established price, and subtracting ten (10) percent of the contract or Authority established price.

37.4 In the event that either of these indices is no longer available, the parties shall mutually agree to a replacement index. The value of the adjustment will be determined by the AUTHORITY.

ARTICLE 38 – ORDER OF AGREEMENT ACTIVATION/LOCATION ASSIGNMENT

The CONTRACTOR has entered into a contingent Agreement with the AUTHORITY for Hurricane/Disaster Debris Removal, Reduction, and Disposal. The Agreement awarded will be activated on an as-needed basis as solely determined by the AUTHORITY. The AUTHORITY may activate, assign/reassign any or all CONTRACTORS at any time as may be deemed appropriate depending upon the circumstance(s), the event, or any other condition which may warrant such action as it determines in its sole and unfettered discretion.

ARTICLE 39 – TASK ORDER/PERFORMANCE

Task Orders shall be executed bilaterally, and the scope of services and format of Task Orders shall be mutually agreed to by the CONTRACTOR and AUTHORITY. Performance will be measured by the metrics established in each Task Order. After 1/3 and again after 2/3 of the stipulated number of days of work in the Task Order have elapsed, the CONTRACTOR(S) shall provide a written progress report to the AUTHORITY for review and acceptance. The AUTHORITY shall have the right to correct for CONTRACTOR default or underperformance by any means it deems in its best interest. CONTRACTOR will be required to provide a daily report of quantity of work performed under each Task Order. The daily report shall be submitted by 11:00 a.m. or earlier the following morning.

ARTICLE 40 – BONDS

CONTRACTOR shall maintain a Proposal Bond in the sum of $500,000. The CONTRACTOR's Proposal Bond will be returned to the CONTRACTOR in exchange for and acceptance of an appropriate size bond as determined by the

AUTHORITY after assessment of damage and definition of the CONTRACTOR's scope of service. In case of hurricane caused damage, a Category 1 storm would require a $2,000,000 Bond, a Category II would require a $4,000,000 Bond, a Category III would require a $6,000,000 Bond, a Category IV would require an $8,000,000 Bond, and a Category V would require a $10,000,000 Bond. The Bond required would be a Performance and Payment Bond, Attachment H. The cost of the Bond is included in the unit rates in the Fee Schedule, Exhibit B. The CONTRACTOR shall maintain the Proposal Bond in effect until the Performance and Payment Bond is submitted to and accepted by the AUTHORITY. If the CONTRACTOR fails to supply a Performance and Payment Bond, the AUTHORITY shall be entitled to retain the Proposal Bond to rectify the CONTRACTOR's unacceptable performance. Pending successful annual CONTRACTOR recertification, the Proposal Bond shall be in effect for the entire term of the Agreement, except for period(s) of time when a Performance and Payment Bond is in effect.

ARTICLE 41 – FLORIDA HIGHWAY ADMINISTRATION (FHWA) FORM 1273

41.1 This Agreement incorporates all of the provisions set forth in the document commonly known as FHWA Form 1273, Attachment F, which is attached hereto and incorporated by reference as part of this Agreement. The term "contractor" as used in Attachment F shall apply to and mean the CONTRACTOR who may be referred to in Attachment F as the "prime contractor", "bidder", "proposer", "prospective primary participant", "prospective participant", "participant" or the like. The CONTRACTOR will perform the duties and obligations of the other contracting party regardless of the description or label used in Form 1273, Attachment F.

41.2 The CONTRACTOR shall comply with the Davis-Bacon wages rates to the extent applicable to the work performed under this Agreement. The provisions of the Davis-Bacon Act do not apply to debris removal work unless such work is done in conjunction with a construction project or "linked" to a particular Federal Highway. Wage rate tables may be found at http://www.dot.state.fl.us/construction/wage.shtm. Said wage rate tables are incorporated into and made part of this Agreement by reference.

ARTICLE 42 – BUY AMERICA REQUIREMENTS

The CONTRACTOR agrees to comply with the requirements of the Federal Buy America law (See 23 U.S.C. 313, ISTEA Sections 1041(a) and 1048(a), as they may be amended from time to time) as they relate to Federal-aid contracts and the use of steel and iron produced in the United States. A description of the requirements of Buy America is set forth in Attachment G, which is attached hereto and incorporated by reference as part of this Agreement. CONTRACTOR shall provide a certification statement regarding the origin of all materials or products covered under the Buy America provisions and used in its performance of the Agreement in accordance with the requirements of law and the AUTHORITY, FDOT, and FEMA, to the extent applicable.

ARTICLE 43 – DISADVANTAGED BUSINESS ENTERPRISES

43.1 This provision shall supplement Article 31 "Equal Business Opportunity Program" of the Agreement. The Agreement is subject to the requirements of 49 CFR Part 26. The CONTRACTOR shall not discriminate on the basis of race, color, national origin, or sex in the performance of the Agreement. The CONTRACTOR shall carry out the applicable requirements of 49 CFR Part 26 in the award and administration of this U.S. DOT-assisted contract. Failure by the CONTRACTOR to carry out these requirements is a material breach of Agreement, which may result in the termination of this Agreement or such other remedy as the AUTHORITY deems appropriate, including but not limited to the withholding of payments. Each subcontract the CONTRACTOR signs with a subcontractor must include the assurance in this paragraph. (See 49 CFR 26.13). Upon request, the CONTRACTOR will provide the AUTHORITY with a copy of each subcontract it enters into.

43.2 The CONTRACTOR is required to pay its subcontractors performing work related to this Agreement for satisfactory performance of that work no later than thirty (30) days after the CONTRACTOR's receipt of payment for that work from the AUTHORITY. The CONTRACTOR may not hold any retainage from its

subcontractors unless pursuant to an agreement approved by the AUTHORITY. The CONTRACTOR shall return all retainage payments withheld within thirty (30) days after the subcontractor's work has been satisfactorily completed.

43.3 The CONTRACTOR shall, on a monthly basis, submit payment certifications, including a certification regarding their truth and accuracy, for all payments it is seeking and certifications from all subcontractors indicating who has been paid and how. The certifications shall comply with all Federal and State requirements regarding the reporting of DBE participation. The CONTRACTOR shall, if required by the AUTHORITY or FDOT, report its DBE participation monthly on the Equal Opportunity Reporting System located on the Florida Department of Transportation's (FDOT) website found at www.bipincwebapps.com/bizwebflorida/. Audits may be conducted to review payments to DBE subcontractors. The CONTRACTOR will fully cooperate with the AUTHORITY, FDOT, or FEMA regarding the monitoring of subcontractors and payments made thereto.

ARTICLE 44 – CERTIFICATION REGARDING SUSPENSION AND DEBARMENT

44.1 This Agreement is a covered transaction for purposes of 49 CFR Part 29. Accordingly, the CONTRACTOR shall verify that neither the CONTRACTOR, nor its principals, as defined at 49 CFR 29.995, or affiliates, as defined at 49 CFR 29.905, are excluded or disqualified from participation in this Agreement as defined at 49 CFR 29.940 and 29.945.

44.2 The CONTRACTOR agrees to comply with the requirements of 49 CFR 29, Subpart C throughout the term of this Agreement. The CONTRACTOR must include the requirement to comply with 49 CFR 29, Subpart C in any lower tier covered transaction it enters into. CONTRACTOR's certification is a material representation of fact relied upon by the AUTHORITY. If it is later determined that the CONTRACTOR knowingly rendered an erroneous certification, in addition to remedies available to the AUTHORITY, the State or Federal government may pursue any available remedies, including but not limited to suspension and/or debarment. The CONTRACTOR further agrees that it will include a provision requiring such compliance in all of its subcontracts or lower tier covered transactions.

ARTICLE 45 – ACCESS TO RECORDS AND THEIR RETENTION

45.1 This provision shall supplement Article 26 of this Agreement. The CONTRACTOR shall maintain adequate records to justify all charges, expenses, and costs incurred in estimating and performing the Agreement for at least five (5) years after completion or termination of this Agreement or FDOT's closure of an "emergency event" with the Florida Division of Emergency Management, whichever comes last, except in the event of litigation or settlement of claims arising from the performance of the Agreement, the CONTRACTOR agrees to maintain said records until all litigation, claims, appeals or exceptions related thereto have been resolved. The records shall be maintained at a location in Palm Beach County, Florida or such other location in Florida approved by the AUTHORITY.

45.2 The CONTRACTOR shall make all of its books, records, and other documents related, in any manner to its or its subcontractors' performance of the Agreement, available to the AUTHORITY and any other funding entity (e.g. FDOT, FEMA, the Comptroller General of the U.S. or any of their authorized representatives) for the purpose of examination, audit, reproduction, excerpts and transcripts, during normal business hours, at the CONTRACTOR's place of business or if CONTRACTOR's place of business is not located in Palm Beach County, then at the location for maintenance of records referenced above. The CONTRACTOR shall also require its subcontractors to make their books, records and documents available for examination, audit, reproduction, excerpts, and transcripts, for the same duration and in the same manner, and at or near the same locations required herein of CONTRACTOR.

ARTICLE 46 – AUDIT REQUIREMENTS

This provision shall supplement Article 26 of this Agreement. The CONTRACTOR agrees that audits may be undertaken of its records related to its performance of the Agreement as may be authorized or required under OMB Circular A-133, as revised. The CONTRACTOR agrees that it will comply, execute any necessary documents and fully cooperate with the AUTHORITY and any State and/or Federal funding agency(ies), including but not limited to FDOT, Florida's Auditor General, FEMA, or any of their authorized representatives, in any audit or monitoring procedures or processes any such entity(ies) may undertake related to CONTRACTOR's performance of the Agreement in order to properly and satisfactorily complete the audit, if any.

ARTICLE 47 – NATIONAL ENVIRONMENTAL POLICY ACT (NEPA)

The CONTRACTOR shall cooperate with the AUTHORITY, FDOT, and FEMA so as to assure that all activities related to the performance of this Agreement comply with the requirements of the National NEPA of 1969, as amended, and the regulations and guidance related thereto.

ARTICLE 48 – AMERICANS WITH DISABILITIES ACT

The CONTRACTOR does hereby represent and certify that it will comply with all the requirements of the Americans with Disabilities Act of 1990 (42 USC 12102, et seq.), as it may be amended, and all applicable impending regulations of the U.S. DOT, FEMA, and other Federal-aid agencies.

ARTICLE 49 – COMPLIANCE WITH TITLE VI, TITLE VII, AND OTHER FEDERAL LAWS AND REGULATIONS

The CONTRACTOR does hereby represent and certify that it will comply with all the requirements imposed by Title VI of the Civil Rights Act of 1964 and Title VII of the Civil Rights Act of 1968, as they have been and may be modified from time to time (42 USC 2000d et. Seq. and 3601 et seq.) and the Age Discrimination and Employment Act of 1967 and Section 303 of the Age Discrimination Act of 1975, as amended (42 USC 6102), and all applicable Federal laws and regulations, policies, procedures, and directives of the U.S.DOT, FEMA and/or other Federal-aid agencies, as they may be promulgated and amended from time to time.

ARTICLE 50 – CONVICT LABOR PROHIBITION

The CONTRACTOR does hereby represent and certify that it will comply with the convict labor prohibition in 23 U.S.C. 114, and all implementing regulations thereto.

ARTICLE 51 – CERTIFICATION REGARDING LOBBYING ACTIVITIES

A Bidder or Proposer for an award of certain Federal-Aid contracts in the amount of $100,000 or more, must file the certification required by 49 CFR Part 2. The CONTRACTOR confirms that by signing and submitting a Bid or Proposal for the work covered by this Agreement, it made the certification described in Section X1 of the Attachment F herein.

ARTICLE 52 – DEPARTMENT OF HOMELAND SECURITY (DHS) SEAL, LOGO, AND FLAGS

The CONTRACTOR shall not use the DHS seal(s), logos, crests, or reproductions of flags or likenesses of DHS agency officials without specific FEMA pre-approval.

ARTICLE 53 – NO OBLIGATION BY FEDERAL GOVERNMENT

The Federal Government is not a party to this Agreement and is not subject to any obligations or liabilities to the AUTHORITY, CONTRACTOR, or any other party pertaining to any matter resulting from this Agreement.

ARTICLE 54 – PROGRAM FRAUD AND FALSE OR FRAUDULENT STATEMENTS OR RELATED ACTS

The CONTRACTOR acknowledges that 31 U.S.C Chapter 38 (Administrative Remedies for False Claims and Statements) applies to the CONTRACTOR's actions pertaining to this Agreement.

REMAINDER OF PAGE LEFT BLANK INTENTIONALLY

In Witness Whereof, AUTHORITY, and CONTRACTOR have made and executed this Agreement all as of the day and year first above written.

SOLID WASTE AUTHORITY OF PALM BEACH COUNTY:

WITNESS:

1. _____

2. _____

By: _____
Daniel Pellowitz
Executive Director

(SEAL)

APPROVED AS TO LEGAL SUFFICIENCY:

By: Howard J. Falcon III
Digitally signed by Howard J. Falcon III
DN: dc=org, dc=pbcgov, ou=Enterprise, ou=CATT, ou=Users, cn=Howard J. Falcon III, email=hfalcon@pbcgov.org
Reason: I am the author of this document
Location: your signing location here
Date: 2022.04.25 11:30:20-04'00'
Foxit PDF Editor Version: 11.2.1

Howard J. Falcon, III
General Counsel

APPROVED AS TO TERMS AND CONDITIONS:

_____
Signature

Patrick D. Carroll
Print Name

COO
Title

ATTEST:

_____
Corporate Secretary

WITNESS:

1. _____

2. _____

DRC EMERGENCY SERVICES, LLC:

_____
Authorized Signature

Kristy Fuentes
Print Name

Vice President, Secretary, Treasurer
Title

_____
Date

(Affix Corporate Seal)

Approved by Authority Board on April 13, 2022, Item No.: 9. C.1

SCOPE OF WORK

1. PROJECT DESCRIPTION AND REQUIREMENTS:

A. The AUTHORITY seeks COINTRACTOR to remove and lawfully dispose of disaster-generated debris (other than hazardous materials and household putrescible garbage) from public property and public rights-of-way, and to setup and operate Temporary Debris Management Site(s) (TDMS) in Palm Beach County, Florida, immediately after a hurricane or other disaster.

B. The objective of this RFP and subsequent contracting activity is to secure the services of an experienced CONTRACTOR who is capable of efficiently removing large volumes of disaster-generated debris from a large area in a safe, timely and cost-effective manner and lawfully disposing of all debris. CONTRACTOR must be capable of assembling, directing, and managing a work force that can complete the debris management operations in 120 days or less. The duration of effort/completion dates of all tasks will be determined jointly by the AUTHORITY and CONTRACTOR. This determination will be set in writing in appropriate Task Order(s).

C. The CONTRACTOR shall perform all work in strict accordance with Federal Emergency Management Agency (FEMA) guidelines in order to maximize recovery of reimbursable expenses. This task shall include the provision of audit quality documentation as required by and acceptable to FEMA for all work accomplished.

D. The CONTRACTOR may be required, at the AUTHORITY'S discretion, to be under the direction of an agent of the AUTHORITY.

E. While intended to cover debris management needs in any major disaster scenario, the primary focus is on the threat of hurricane damage to Palm Beach County, Florida. The planning standards used for this project are based on the anticipated impacts of a named storm event or major flood impacting Palm Beach County, Florida. The AUTHORITY intends to enter into contingency Agreement(s) as further defined herein, to provide emergency debris removal and disposal services as required by the AUTHORITY.

2. INTRODUCTION:

A. The AUTHORITY'S disaster recovery planning includes considerations for removing and processing the volumes and types of debris expected to be generated by a major disaster such as a hurricane or major flood and includes procedures for disposing of that debris. The planning approach is formulated in part on the concept of strategic pre-positioning of plans and resources necessary for timely, safe, coordinated recovery operations, including removal of debris from public property and rights-of-way throughout Palm Beach County using a combination of county, municipal, and CONTRACTOR forces.

B. If activation is required, the AUTHORITY intends to activate contracts on an as-needed basis as solely determined by the AUTHORITY. The AUTHORITY intends to activate the CONTRACTORS in the order of final ranking as best meets the needs of the AUTHORITY. The AUTHORITY reserves the right in its sole and unfettered discretion, to assign/reassign any or all CONTRACTORS at any time as may be deemed appropriate depending upon the

circumstance(s), the event, or any other condition which may warrant such action.

C. The AUTHORITY envisions the need for four (4) CONTRACTORS to carry out the debris removal and disposal work throughout Palm Beach County. The CONTRACTOR must have the experience and capability to manage a major workforce with multiple subcontractors and to cover the expenses associated with a major recovery operation prior to the initial AUTHORITY payment and between subsequent payments, as well as the capacity to provide the necessary bonds and insurance. The CONTRACTOR must also have an established management team, an established network of resources to provide the necessary equipment and personnel, comprehensive debris removal, volume reduction operations plan, and demonstrable experience in major disaster recovery projects.

D. The Agreement(s) to be awarded under this RFP will be contingency Agreement(s) that will be activated only in the face of an emergency. As such, no compensation will accrue to the CONTRACTOR unless and until the Agreement is activated either in anticipation of a natural disaster or immediately after such disaster.

E. The CONTRACTOR who receives an Agreement for the work, will be required to participate in certain AUTHORITY directed disaster recovery training and/or exercises, 1 to 2 days each year, at no cost to the AUTHORITY.

F. The AUTHORITY does not guarantee a CONTRACTOR will be activated if awarded an Agreement.

3. PLANNING STANDARD FOR DEBRIS REMOVAL AND DISPOSAL:

The AUTHORITY'S goal is to complete the debris removal and disposal process in 120 days following the storm event. This assumes that the entire area of the county will be accessible within that period. Due to the low elevation and potential for flooding, some areas might not be accessible for several weeks after a major natural disaster. The CONTRACTOR must be aware that it might not be possible to initiate operations in all parts of the county simultaneously immediately after a storm.

4. DEBRIS MANAGEMENT:

A. Planning for debris management operations is a function of the AUTHORITY as a supporting agency to the Palm Beach County Department of Engineering and Public Works. The AUTHORITY'S Emergency Management Coordinator will direct the debris removal and disposal operations.

B. In addition to using AUTHORITY forces and equipment, the AUTHORITY intends to execute four (4) debris removal and disposal Agreements on a contingency basis for the purpose of having CONTRACTOR(S) immediately available and committed to assisting the AUTHORITY in the aftermath of a major disaster. Each CONTRACTOR holding a debris removal and disposal Agreement will serve as a General CONTRACTOR for the purpose of debris removal and disposal operations and will be able to use his/her own and subcontractor resources to meet the obligations of the Agreement. It is anticipated, but not required, that the CONTRACTOR will use both local and non-local subcontractors.

C. When a major disaster occurs or is imminent, the AUTHORITY intends to contact the highest two (2) or three (3) ranked CONTRACTORS holding debris removal and disposal Agreements to advise them of the AUTHORITY'S intent to activate the Agreement(s). Debris removal will generally be limited to debris in, upon, or brought to county residential private and public streets and roads, rights-of-way, municipal properties and facilities, and other public sites (this includes debris from customers assessed for residential solid waste and recycling collection services by the AUTHORITY). The CONTRACTOR will be responsible for determining the method and manner of debris removal and lawful disposal operations. Disposal of debris will be at AUTHORITY approved TDMS or landfill sites. The CONTRACTOR will be responsible for the lawful disposal of all debris and debris-reduction by-products generated at all TDMS.

D. When a major disaster occurs or is imminent, the AUTHORITY will initially send out an Alert to the selected CONTRACTOR(S). This Alert will serve to activate the lines of communication between the CONTRACTOR representatives and the AUTHORITY. Subsequently, the AUTHORITY will issue the first Task Order which will authorize the CONTRACTOR to send an Operations Manager to the AUTHORITY within 24 hours of receiving such Task Order, to begin planning for the operations and mobilizing the personnel and equipment as necessary to perform the stipulated work. This first Task Order will also direct the CONTRACTOR to execute the required Performance and Payment Bond. The CONTRACTOR should anticipate receiving this first Task Order 24 to 72 hours before projected landfall of a hurricane or major flood. Depending on the nature of the storm and circumstances, the AUTHORITY may activate more than one (1) CONTRACTOR. CONTRACTOR(S) will generally be activated in order of final ranking.

E. Specific task orders will be issued to select CONTRACTORS based on the best interest of Palm Beach County. The AUTHORITY reserves the right to assign work or task orders to various CONTRACTORS based on capability. The AUTHORITY does not guarantee a cradle to grave pricing arrangement but reserves the right to pick and choose CONTRACTORS based on ranking.

F. The general concept of debris removal operations includes multiple, scheduled passes of each site, location, or right-of-way. This will allow residents to return to their properties and bring debris to the private and public right-of-way as recovery progresses. The AUTHORITY will prescribe the specific schedule to be used after ascertaining the scope and nature of the disaster's impacts.

G. The AUTHORITY will make every effort to identify strategically located public and private TDMS throughout the county prior to a natural disaster. Depending upon the severity of the natural disaster, additional public and private TDMS will be identified as needed.

H. The CONTRACTOR will operate the public and private TDMS and only CONTRACTOR vehicles and others specifically authorized by the AUTHORITY will be allowed to use the sites. Only one (1) level of subcontractor will be allowed to operate the sites. There will be no multi-tiered subcontractors (sub of a sub) allowed to operate TDMS. The CONTRACTOR is responsible for all activity at TDMS operated by their subcontractor and must have an employee on site at all times to oversee daily operations. **The locations of both publicly and privately owned sites currently under consideration are shown on Attachment C.** Additional public and privately owned TDMS may become available as plans develop. The

availability of both private and public TDMS may change during the term of the Agreement.

I. The AUTHORITY may also establish designated homeowner drop-off sites on a public right-a-way (PROW) for communities. The CONTRACTOR will be responsible for removing all eligible debris from those approved designated locations at the direction of the Emergency Management Coordinator or designee.

J. Curbside segregation of debris and disaster-generated or related wastes will be an element of the AUTHORITY'S disaster recovery program. The debris removal and disposal CONTRACTOR will be required to aid in the segregation and waste stream management processes. Any Household Hazardous Waste (HHW) encountered by the debris removal CONTRACTOR is to be set aside. HHW disposal will be the responsibility of the resident. The AUTHORITY will designate HHW drop-off locations.

K. The following items are considered HHW for the purpose of this Agreement:

1. Used Oil
2. Batteries
3. Paint
4. Aerosol spray cans
5. Pesticides
6. Antifreeze
7. Fluorescent light bulbs
8. Propane tanks (household size)

L. The CONTRACTOR will setup a lined containment area and separate any HHW inadvertently delivered to a TDMS.

M. Commercial and industrial hazardous waste such as chemicals, gas containers, transformers, and any other form of hazardous or toxic matter will be set aside for collection and disposal by a Hazardous Materials Removal and Disposal Contractor who will be selected by the AUTHORITY.

N. Putrescible residential garbage will be collected by AUTHORITY franchise waste haulers and is not to be collected or transported by CONTRACTOR forces. The AUTHORITY may enter into a separate emergency debris removal agreements with each franchise hauler to operate their dedicated self-loading collection equipment within their Service Area for FEMA eligible storm debris removal.

5. SCOPE OF WORK/OVERVIEW:

This section is divided into three (3) subsections:

5.1 **Debris Removal and Disposal Operations** from residential public and private streets, roads and rights-of-way and delivered to a TDMS designated by the Authority.

5.2 **TDMS Operations** which includes daily operations as well as reclamation of the site to its pre-storm condition or as directed by the AUTHORITY Emergency Management Coordinator

5.3 Processing, Loading and Hauling Material from TDMS to final destination.

A. Specific work authorizations by the AUTHORITY will be through written Task Orders. Task Orders will define the job to be accomplished, location of job, timeframe for completion, rates to be used, etc. Any job with requirements or rates not covered by this Proposal will be negotiated. The AUTHORITY reserves the right to extend operations on a weekly basis. Task Orders will be executed bilaterally. Performance will be by the metrics established in the Task Order(s). After 1/3 and again after 2/3 of the stipulated number of days of work in the Task Order have elapsed, the CONTRACTOR(S) shall provide written progress report to the AUTHORITY for review and acceptance. The AUTHORITY shall have the right to correct for CONTRACTOR'S default or underperformance by any means it deems in its best interest at the CONTRACTOR'S expense.

B. The CONTRACTOR shall commence mobilization immediately upon receipt of the mobilization Task Order meeting the following progress patterns: 48 hours- collection activity within assigned Collection Service Area. Within ten (10) calendar days CONTRACTOR shall have 100% of all necessary equipment operating within all Collection Service Areas. This represents a minimum response schedule and does not restrict an earlier response. Subsequently, the AUTHORITY may issue additional Task Orders to define more precisely the work to be accomplished or to authorize additional work. The CONTRACTOR shall perform in accordance with each Task Order in all designated Collection Service Areas established by the AUTHORITY. Each Task Order will be uniquely and sequentially numbered.

C. The CONTRACTOR is authorized to collect debris during daylight hours, seven (7) days per week. Any deviations from this schedule will require AUTHORITY approval.

D. The CONTRACTOR must be duly licensed to perform the work in accordance with the State of Florida statutory requirements. The CONTRACTOR shall obtain all permits necessary to complete the work. The CONTRACTOR shall be responsible for determining what permits are necessary to perform under the Agreement. Copies of all permits shall be submitted to the AUTHORITY's Director, Customer Information Services prior to issuance of the first Task Order.

E. The quantity of work required to complete the Agreement resulted from this RFP is estimated. The actual effort required may be more or less than the estimated amount shown in the Proposal Form 3 – Price Proposal. Payment will be made at the unit rates proposed. The output will be verified by the AUTHORITY's Director, Customer Services in the daily operational report. Should hourly rates be used to pay for certain equipment other than preventative maintenance, not in excess of fifteen (15) minutes in a normal workday, will be paid at the regular hourly rate. Preventative maintenance or down time resulting from equipment failure, routine maintenance and fueling that exceeds fifteen (15) minutes will be considered unacceptable work and non-payment of that time will be rounded off to the half hour of all hours where delays occur. Preventative maintenance is defined as the usual field maintenance to keep equipment in operating condition without the use of extensive shop equipment. Fueling of equipment will be considered as part of preventative maintenance.

F. The CONTRACTOR shall be responsible for correcting any notices of violations issued as a result of the CONTRACTOR'S or any subcontractor's actions or operations during the performance of this Agreement. Corrections for any such violations shall be at no additional cost to the AUTHORITY.

G. The CONTRACTOR shall conduct the work so as not to interfere with the disaster response and recovery activities of federal, state or local governments or agencies, or of any public utilities or other private contractor.

H. The CONTRACTOR shall provide contact information for all key personnel to the AUTHORITY that shall include name, phone number, cellular phone number and email address. The CONTRACTOR and its agents shall respond in a timely manner to all AUTHORITY inquiries at all times.

6. DEBRIS REMOVAL AND DISPOSAL OPERATIONS

6.1 General:

A. The purpose of this section is to define the requirements for debris removal and disposal operations after any catastrophic disaster within Palm Beach County. The AUTHORITY may designate zones for collection and disposal locations for debris collected. CONTRACTORS will be tasked with a service area(s) for this specific work immediately after the activation of the Agreement.

B. For work performed on a Time and Materials basis, all hourly equipment rates shall include the cost of the maintenance, fuel, repairs, overhead, profit, insurance, and all other costs associated with the equipment including labor and operator.

6.2 Services:

A. The CONTRACTOR shall provide equipment, operators, and laborers for debris removal operations. The CONTRACTOR shall provide all labor and materials necessary to fully operate and maintain (including fuel, oil, grease, and repairs) all equipment under this Agreement.

B. All rates are to include the cost of protective clothing (to include hardhats and steel-toed boots), fringe benefits, hand tools, supervision, transportation, lodging, meals, and all other costs.

C. The work shall consist of clearing and removing disaster generated debris as directed by the AUTHORITY Emergency Management Coordinator. CONTRACTOR shall provide collection equipment the day following a natural disaster or as directed by the AUTHORITY and shall provide equipment sufficient to collect a minimum of 50,000 cubic yards of debris per day within ten (10) calendar days of collection commencement (Past AUTHORITY natural disaster cleanup records show that ten (10) days' following disaster, 95,000-126,000 cubic yards of debris collected per day). Failure to provide sufficient equipment necessary to collect required amount may result in the AUTHORITY entering into a separate agreement with another contractor for collection services.

6.2.1 Removal of Hazardous Leaning Trees and Hanging Limbs

a) Under this contract, work shall consist of all labor, equipment, fuel, and miscellaneous costs necessary to remove all hazardous trees twelve inches (12") or greater in diameter, measured three feet (3') from the base of the tree or chest height and hanging limbs two inches (2") or greater in diameter existing in private and public right-of-way. Further, debris generated from the removal of hazardous trees and hanging limbs two inches (2") or greater existing in private and public right-of-way will be placed at the public right-of-way for removal as vegetative debris. Hazardous leaning trees less than twelve inches (12") in diameter, measured three feet (3') from the base of the tree or at chest height, will be flush cut, and placed on the public right-of-way to be removed as vegetative debris. The AUTHORITY will not compensate the CONTRACTOR for leaning trees less than twelve inches (12") in diameter on a unit rate basis.

b) Removal and transportation of hazardous trees twelve inches (12") or greater in diameter and hanging limbs two inches (2") or greater in diameter existing in private and public right-of-way will be performed as identified by the AUTHORITY. All disaster specific eligibility guidelines regarding size and diameter of leaning trees will be communicated to the CONTRACTOR, in writing, by the AUTHORITY. In order for leaning or hazardous trees to be removed and eligible for reimbursement, the tree must satisfy a minimum of one (1) of the following requirements:

   i) The tree is leaning in excess of 30° degrees in a direction that poses an immediate threat to public health, welfare, and safety.
   ii) The tree is dead, twisted, or mangled as a direct result of the storm and a certified arborist can attest to the fact that the tree will die and potentially create a falling hazard to the public.

6.2.2 Removal of Hazardous Stumps

a) Under this contract, work shall consist of all labor, equipment, fuel, and miscellaneous costs necessary to remove all hazardous uprooted stumps 24 inches or greater in diameter, measured 24 inches from the base of the tree existing in private and public right-of-way. Further, debris generated from the removal of uprooted stumps existing in private and public right-of-way will be placed at the public right-of-way for removal as vegetative debris. Stumps measured 24 inches from the base of the tree and less than 24 inches in diameter will be considered normal vegetative debris and removed in accordance with 3.1.2. The AUTHORITY will not compensate hazardous stumps less than 24 inches in diameter on a unit rate basis and instead will be considered normal vegetative debris. The diameter of stumps less than 24 inches will be converted into a cubic yardage volume based on the published FEMA stump conversion table (In accordance with current FEMA public assistance guidelines) and removed under the terms and conditions of 2.6.2.

b) Removal and transportation of hazardous uprooted stumps existing in the

private and public right-of-way and private property will be performed as identified by the AUTHORITY. All disaster specific eligibility guidelines regarding size and diameter of hazardous stumps will be communicated to the CONTRACTOR, in writing, by the AUTHORITY. In order for hazardous stumps to be removed and eligible for reimbursement, the stump must satisfy the following requirement:

(i) Over 50% of the tree crown is damaged or broken and heartwood is exposed.
(ii) Tree stumps that are not attached to the ground will be considered normal vegetative debris and subject to removal under the terms and conditions of 2.1. The cubic yard volume of the unattached stump will be based off of the diameter conversion using the published FEMA stump conversion table (In accordance with current FEMA public assistance guidelines).

The AUTHORITY or its representative will measure and certify all stumps before removal.

6.2.3 Collection of Storm Generated Residential Vegetation and Construction and Demolition Debris:

a) It is the AUTHORITY'S goal to ensure that Vegetation and Construction/Demolition debris remain separate task orders for the collection of Vegetation and Construction loads. Mixing of loads by the CONTRACTOR at the road right of way will not be tolerated.

Work may include:

(i) First pass to clear debris from emergency evacuation routes, access roads to critical facilities and all primary roadways.
(ii) Clearing debris from residential private and public road right of ways.
(iii) Loading the debris.
(iv) Hauling the debris to an approved AUTHORITY TDMS or an authorized private construction demolition debris recycling facility or landfill.
(v) Dumping the debris at the TDMS or direct haul to an Authority permitted approved private Construction and Demolition Debris (C&D) recycling facility or Authority authorized landfill.

b) Debris delivered to a TDMS, private C&D recycling facility or authorized landfill will be paid based on the per cubic yard price according to the Proposal Form 3 – Price Proposal.

6.2.4 Hourly Rate Clearing:

a) From 0-70 hours following a disaster CONTRACTOR, as designated by the AUTHORITY, shall provide the clearing services on an hourly rate that shall include the following:

(i) Clear debris from emergency evacuation routes, access roads to critical facilities, and primary roadways.

(ii) Perform emergency removal of debris if needed for life-saving measures.
(iii) Conduct daily briefings with debris managers and other officials to update progress and discuss issues.
(iv) Develop a traffic control plan along potential haul routes and at debris management and disposal sites.

b) The CONTRACTOR shall not move from one designated Collection Zone to another area without prior approval from the AUTHORITY's Director, Customer Information Services or designee. CONTRACTORS and/or subcontractors that move to a designated Collection Service Area without prior AUTHORITY approval may be terminated immediately. The AUTHORITY reserves the right to relocate CONTRACTOR to other Collection Service Areas based on need and ability to perform required work at an acceptable level. The AUTHORITY reserves the right to immediately terminate CONTRACTOR and any subcontractor who fails to provide service in strict accordance with guidelines set forth by FEMA and the AUTHORITY.

c) The AUTHORITY or designee shall forward all claims of damage to the CONTRACTOR daily. CONTRACTOR shall provide all contact information, including name, phone number, cellular phone number, fax number and email address, for personnel responsible for resolving all claims of damage. CONTRACTOR must respond to all claims of damage within 24 hours and resolve within ten (10) calendar days. Mailboxes must be repaired or replaced within two (2) calendar days. CONTRACTOR is responsible for all damage caused by his crew and/or subcontractors in the performance of debris removal.

d) In the event the CONTRACTOR fails to repair damages as a result of the Contractor's equipment failure or negligence within the time provided in this Agreement, the AUTHORITY or designee may arrange for the repairs and assess the CONTRACTOR for the cost of the repairs and any applicable administrative charges. Any disputes as to damage responsibility will be presented to the Director, Customer Information Services or designee for review. The decision of the Director, Customer Information Services or designee will be final.

6.3 Equipment:

A. All trucks and equipment must be in compliance with all applicable federal, state, and local rules and regulations. Trucks used to haul debris must be capable of rapidly dumping their load without the assistance of other equipment, be equipped with a tailgate that will effectively contain the debris during transport that will permit the trucks to be filled to capacity. Cyclone fence may be used as temporary tailgates if they comply with the following specifications:

1. Fencing must be permanently attached to one side of the truck bed.
2. After loading, the fencing must be tied to the other side of the truck bed at two places with heavy gauge wire.
3. Fencing must extend to the bottom of the bed.

4. After loading, bottom of fencing shall be tight against the bed of the truck and secured at a minimum of two locations.
5. Solid iron metal bars must be secured to both sides of the fencing.
6. There shall be no hand loaded equipment allowed.

B. The AUTHORITY or designee shall complete certifications indicating the type of vehicle, make and model, license plate number, equipment number, and measured maximum volume, in cubic yards, of the load bed of each piece of equipment utilized to haul debris. The measured volume of each piece of equipment shall be calculated from actual internal physical measurement performed and certified by the CONTRACTOR. Maximum volumes may be rounded up to the nearest cubic yard. The reported measured maximum volume of any load bed shall be the same as shown on the placards affixed to each piece of equipment. The AUTHORITY reserves the right to re-measure trucks and trailers at any time to verify reported capacity. If a truck and/or trailer are re-measured and the yardage capacity is determined to be lower, the lower yardage volume will be retroactive to the initial load and total volume adjusted accordingly.

C. All trucks and trailers utilized in hauling debris shall be equipped with a tailgate that will permit the vehicle to be loaded to capacity and effectively contain the debris on the vehicle while hauling. If installed, all sideboard extensions must remain in place throughout the operation, or the vehicle must be re-measured and remarked. All extensions to the bed are subject to acceptance or rejection at the sole discretion of the AUTHORITY or designee.

D. Trucks or equipment designated for use under this Agreement shall not be used for any other work during working hours. The CONTRACTOR shall not solicit work from private citizens or others to be performed in the designated Collection Service Area during the period of this Agreement. Under no circumstance will the CONTRACTOR mix debris hauled for others with debris hauled under this Agreement. Failure to comply will result in no payment to CONTRACTOR and the operator and vehicle will be declared ineligible to provide any additional emergency debris collection services. Any and all unapproved changes to placard will result in no payment to CONTRACTOR and the operator and vehicle will be declared ineligible to perform any additional emergency debris collection services.

6.4 Securing Debris

The CONTRACTOR shall be responsible for properly and adequately securing debris on each piece of equipment utilized to haul debris. Prior to leaving the loading site, the CONTRACTOR shall ensure that each load is secure and trimmed so that no debris extends horizontally beyond the bed of the equipment in any direction. All loose debris shall be reasonably compacted during loading and secured during transport. Tarps or other coverings shall be provided by the CONTRACTOR to prevent materials from falling or being blown from the bed. Loads not properly tarped or otherwise covered will not be allowed to dispose at any AUTHORITY approved TDMS which may result in non-payment to CONTRACTOR.

6.5 Equipment Signage

Prior to commencing operations, the AUTHORITY or designee shall affix to each piece of equipment, signs or markings indicating the Owner Operator's name and a unique equipment identification number. One sign shall be placed on each side of the equipment. For those trucks, trailers and other equipment intended to haul debris, the maximum volume, in cubic yards, of the load bed shall also be shown. Each operator shall keep AUTHORITY certification with them at all times. Placards must remain on both sides of equipment.

6.6 Other Considerations

A. The CONTRACTOR shall assign and provide an Operations Manager (OM) to the AUTHORITY TDMS to serve as the principal liaison between the AUTHORITY Director, Customer Services or designee and the CONTRACTOR'S forces. The assigned OM must be knowledgeable of all facets of the CONTRACTOR'S operations and have authority in writing to commit the CONTRACTOR. The OM shall be on call 24 hours per day, seven (7) days per week and shall have electronic linkage capability for transmitting and receiving relevant contractual information and make arrangements for onsite accommodations. This linkage shall provide immediate contact via cell phone, Fax machine, and have Internet capabilities. The OM will participate in daily meetings and disaster exercises, functioning as a source to provide essential element information. The OM will report to the AUTHORITY Director, Customer Services or designee. This position will not require constant presence; rather the OM will be required to be physically capable of responding to the AUTHORITY Emergency Management Coordinator within 30 minutes of notification.

B. The CONTRACTOR shall be responsible for control of pedestrian and vehicular traffic in the work area. At a minimum, one flag person should be posted at each approach to the work area.

C. The CONTRACTOR shall supervise and direct the work, using skilled labor and proper equipment for all tasks. Safety of the CONTRACTOR'S personnel and equipment is the responsibility of the CONTRACTOR. Additionally, the CONTRACTOR shall pay for all materials, personnel, taxes, and fees necessary to perform under the terms of this contract.

D. Payment for debris hauled will be based on the quantity of debris hauled in cubic yards. Debris hauled to a TDMS will require a validated load ticket. Drivers will be given an electronic load tickets at the loading site by an AUTHORITY loading site monitor. The quantity of debris hauled will be estimated in cubic yards at the TDMS by an AUTHORITY TDMS monitor. The estimated quantity will be recorded on the electronic load ticket. The AUTHORITY TDMS monitor will retain one copy of the paper load ticket and the driver will retain the remaining copies of the load ticket. Debris being hauled to a permanent landfill will be paid based on cubic yards recorded on an approved electronic or paper load ticket. Payment will be made against the CONTRACTOR'S invoice once site monitor and CONTRACTOR load tickets and/or scale tickets match. Load tickets not properly completed and signed will not be paid.

7. TEMPORARY DEBRIS MANAGEMENT SITES (TDMS) OPERATIONS

7.1 General

A. The purpose of this section is to define the requirements for TDMS Operations after any catastrophic disaster within Palm Beach County.

B. The CONTRACTOR shall use only TDMS designated by the AUTHORITY Emergency Management Coordinator.

C. The TDMS foreman shall direct all vehicular traffic and load drop-off operations. Different types of debris shall be kept in separate piles at the TDMS. At a minimum, one flag person shall be posted at each TDMS for traffic control and to direct unmixed loads to proper location (by debris type) to be offloaded. CONTRACTOR shall be responsible for sorting and proper placement of all loads not dumped in appropriate location which results in mixing the once separated debris at no charge to the AUTHORITY.

D. The CONTRACTOR shall begin grinding vegetative debris within five (5) calendar days of TDMS opening date and removing mulch/wood chips within ten (10) calendar days of site opening date. It is very important your plan provides specific information for the final disposal destination location of the mulch / wood chips removed from the public or private TDMS. The CONTRACTOR shall begin removal of Construction and Demolition/mixed debris from TDMS to an approved final destination within five (5) days of site opening date.

7.2 TDMS Services

7.2.1 Site Setup/Preparation and Site Closeout/Restoration Site setup/preparation and site closeout/restoration shall be compensated on a time and materials basis in accordance with the hourly rates provided in the Proposal Form 3 – Price Proposal Site set-up/preparation/closeout/restoration includes: clearing, stripping, hauling, fill placement, constructing/deconstructing processing pads, limerock or crushed concrete access roads, seeding, and any other similar activity necessary to make the site usable for its intended purposes and to return the site to its original condition. Do not include any materials in calculating the hourly rates in the Proposal Form 3 - Price Proposal. Important- Phase I TDMS Reclamation is included in the 2.0 cubic yard price. Phase I Reclamation requires the contractor to remove all debris from the TDMS including small particles mixed with soil and grading the entire area. The only site closeout cost will be removal of road base material and seeding as approved by the Authority.

7.2.2 TDMS Operations and Material Processing

a. TDMS operations and material processing shall be compensated in accordance with the unit prices provided in the Proposal Form 3 - Price Proposal. The CONTRACTOR shall provide equipment, operators, and laborers for TDMS operations as specified by Task Order. Unit prices provided in the Proposal Form 3 - Price Proposal, shall include all labor and materials necessary to fully operate and maintain (including fuel, oil, grease, repairs, operator, mobilization, demobilization, overhead, profit, lodging and insurance)

all equipment under this Agreement. Each Inspection Tower shall be equipped with two (2) portable toilets. Toilets shall be provided immediately upon completion of tower assembly. CONTRACTOR shall provide a water truck for the purpose of applying to site surface to minimize dust. The AUTHORITY shall provide a front-load garbage container and collection service of the container at each TDMS. CONTRACTOR shall be responsible for cleaning up all trash and litter generated on the site from daily operations and depositing into the container for collection. The entrance roadway and surrounding area within ½ mile of the site's entrance shall be cleaned daily by the CONTRACTOR. All pre-storm identified sites shall be opened by the CONTRACTOR within three (3) calendar days after receiving approval from the AUTHORITY to operate the TDMS. Failure to open sites with proper equipment and necessary personnel will result in liquidated damages of $10,000 per day. All rates shall include the cost of protective clothing (to include hardhats and steel-toed boots), fringe benefits, hand tools, supervision, transportation, lodging, meals, and any other costs. The work shall consist of managing the operations of a TDMS and performing debris reduction by air curtain incineration and/or grinding of storm generated debris as directed by the AUTHORITY Emergency Management Coordinator

b. The AUTHORITY plans to use two types of TDMS.

   1. Vegetative TDMS will be devoted to the reduction of clean woody debris by either burning or grinding. The AUTHORITY expects the material to be recycled and or beneficially re-used if processed by grinding. It is important to provide a detailed plan on how this material will be recycled or beneficially reused after grinding / reduction.

   2. Depending upon the size and type of devastation the AUTHORITY may require a separate Construction & Demolition (C&D) staging area, mixed debris staging area and a separate Household Hazardous Waste staging area. The AUTHORITY requests that PROPOSER implements recycling and or reduction programs to minimize the quantity of construction debris material to be land filled.

c. Material coming into the Vegetative or C&D TDMS will be measured and paid for by the cubic yard according to the Proposal Form 3 – Price Proposal. Material removed and transported from a C&D TDMS will be measured and paid by the cubic yard according to the Proposal Form 3 – Price Proposal.

d. Locations of all TDMS will be approved by the AUTHORITY. The AUTHORITY Emergency Management Coordinator must approve site improvements before work begins and any costs, other than those in the Proposal Form 3 – Price Proposal, that might have been negotiated under a Task Order shall be documented for payment.

e. Material processed at a TDMS by either grinding or burning will be measured

using cubic yards from incoming load tickets. Material entering a TDMS will be deposited in manageable piles.

7.3 Reporting

The CONTRACTOR shall submit a report to the AUTHORITY Emergency Management Coordinator or designee by close of business each day of the term of the Task Order. Each report shall contain, at a minimum, the following information:

1. Contractor's Name
2. Contract Number
3. Daily and cumulative hours for each piece of equipment, *if appropriate*
4. Daily and cumulative hours for personnel, by position, *if appropriate*
5. Volumes of debris handled

Failure to provide audit quality information by 5:00 p.m. of the following day of operation will subject CONTRACTOR to non-payment in each instance at the sole discretion of the AUTHORITY.

7.4 Other Considerations

A. The CONTRACTOR shall supervise and direct the work, using skilled labor and proper equipment for all tasks. Safety of the Contractor's personnel and equipment is the responsibility of the CONTRACTOR. Additionally, the CONTRACTOR shall pay for all materials, personnel, taxes, and fees necessary to perform under the terms of this contract.

B. The CONTRACTOR shall be responsible for control of pedestrian and vehicular traffic in the work area. In the event a TDMS must be closed due to CONTRACTOR equipment or operational failures, CONTRACTOR shall be liable for liquidated damages in the amount of $25,000.00 per day for every day the site has to remain closed.

7.5 Debris Clearance (for access) from Right-of-Ways and Public Property

A. The AUTHORITY provides support to Palm Beach County Government for Debris Management, including the clearance (moving debris from the middle of the road, etc.) of debris from right-of- ways and public property. Palm Beach County intends to perform debris clearance for access with its own forces or under existing contractual Agreements between the County and local firms. However, in a significant disaster, these resources may be insufficient to perform the clearance activities in a timely manner.

B. This debris clearance is to be considered supplemental and optional service. It is anticipated that debris clearance activities would be conducted, if needed, on a time and material basis using the rates in the Proposal Form 3 – Price Proposal.

8. PROCESSING, LOADING AND HAULING MATERIAL:

CONTRACTOR shall provide all necessary labor, material and equipment to process, load and haul wood chips from TDMS in Palm Beach County to final destination for disposal. CONTRACTOR shall provide all necessary labor, material and equipment to load and haul construction and demolition debris and/or mixed debris from TDMS as directed by the AUTHORITY. The AUTHORITY reserves the right to contract with other firms to process, load and haul wood chips and construction and/or mixed debris to a final destination as may best meet the needs of the AUTHORITY. All wood chips, construction and/or mixed debris shall be disposed of in accordance with all Local, State of Florida and Federal guidelines.
CONTRACTOR will provide detailed listing to the AUTHORITY of the following:

1. Quantity (loads and cubic yards)
2. Owner information
3. Site where mulch / reduced yard waste material generated at TDMS is disposed, to include address/GPS location.
4. AUTHORITY will determine final private or public Construction/Demolition debris disposal/recycling facility.

9. MISCELLANEOUS REQUIREMENTS

9.1 TDMS Foreman

A. The TDMS foreman must be an employee of the CONTRACTOR and is responsible for management of all operations of the site to include, traffic control, dumping operations, segregation of debris, burning, grinding, and safety.

B. The TDMS foreman will be responsible for monitoring and documenting equipment and labor time and providing the daily operational report to the AUTHORITY Director, Customer Services or designee.

9.2 TDMS Night Foreman

A. The TDMS night foreman must be an employee of the CONTRACTOR and is responsible for managing all night operations approved by the AUTHORITY.

B. The TDMS night foreman will be responsible for monitoring and documenting equipment and labor time and providing the daily operational report to the AUTHORITY Director, Customer Information Services or designee.

9.3 TDMS Management Plan

A. Once the TDMS is identified by the AUTHORITY, the CONTRACTOR will provide a Site Management Plan.

B. Three (3) copies of the plan are required. The plan shall be drawn to a scale of 1" = 50' and address the following functions:

1. Access to site
2. Site preparation -clearing, erosion control, and grading
3. Traffic control procedures

4. Safety
5. Segregation of debris
6. Location of ash disposal area, hazardous material containment area, CONTRACTOR work area, and inspection tower
7. Location of incineration operations, grinding operation (if required). Burning operations require a 100-foot clearance from the stockpile and a 1000-foot clearance from structures.
8. Specific plan including and location for the final disposal destination of the mulch/wood chips generated at the public or private TDMS.

9.4 Inspection Tower

The CONTRACTOR shall construct an inspection tower at each TDMS within three (3) calendar days of natural disaster. The tower shall be constructed using pressure treated wood or steel scaffold. The floor elevation of the tower shall be 10-feet above the existing ground elevation. The floor area shall be a minimum 8' by 8', constructed of 2"x 8" joists, 16" O.C. with 3/4" plywood supported by a minimum of four 6" x 6" posts. A 4-foot high wall constructed of 2" x 4" studs and ½" plywood shall protect the perimeter of the floor area. The floor area shall be covered with a roof. The roof shall provide a minimum of 6'-6" of headroom below the support beams. Steps with a handrail shall provide access to the tower. Inspection towers must provide a dry area for employees and meet all FEMA and OSHA requirements.

9.5 Grinding Operation

The CONTRACTOR shall have grinder(s) on site and in operation within five (5) calendar days following a natural disaster. Failure to provide sufficient grinding capacity to accommodate expected incoming volumes and allow site to operate in an efficient manner within five (5) calendar days shall result in liquidated damages of $10,000 per day. There shall be no period longer than 24 hours in which grinding activity may stop due to equipment or operational failure. Failure to provide back-up equipment within 24 hours shall result in liquidated damages of $2,000 per hour per approved hours of grinding operation per day until grinding activity resumes.

9.6 Household Hazardous Waste Containment Area

The CONTRACTOR shall construct a hazardous material containment area at each TDMS. The area shall be 30' x 30'. The perimeter shall be lined with hay bales and staked in place. The area shall be lined with a heavy gage plastic to provide a waterproof barrier. Additional plastic sufficient to cover the area is required to prevent rain from entering the containment area. Site run-off must be redirected from the containment area by site grading.

10. PERFORMANCE OF CONTRACTOR

A. It is the intent of this Agreement to ensure that the CONTRACTOR provides a timely quality level of services. To this end, all complaints received by the Emergency Management Coordinator or designee and reported to the CONTRACTOR shall be promptly resolved pursuant to the provisions of this Agreement.

B. The Emergency Management Coordinator or designee may levy administrative charges for the following infractions:

1. Failure to open pre-storm identified sites within three (3) calendar days of after being tasked by the AUTHORITY liquidated damages of $10,000 per day for each day not opened.
2. Closure of TDMS due to CONTRACTOR equipment or operational failures liquidated damages of $25,000 per day, for each day site must remain closed.

C. Failure to provide back-up grinder(s) within 24 hours of equipment breakdown liquidated damages of $2,000 per hour per approved grinding hours of operation per day.

D. CONTRACTOR may also be subject to non-payment and liquidated damages of $200 for each occurrence of the following infractions:

1. Failure to provide audit quality information by 5:00 p.m. of the following day of operation.
2. Loads not properly tarped or otherwise covered.
3. Mixing debris hauled from other sources with debris hauled under this Agreement.
4. Mixing vegetation debris with C & D material.

E. CONTRACTOR may be immediately terminated and not paid for the following:

1. Collection of any non-eligible, non-AUTHORITY approved stumps or debris.
2. Moving to another designated Collection Service Area without prior AUTHORITY approval.
3. Failure to provide service in accordance with guidelines set forth by FEMA and the AUTHORITY.
4. Soliciting work from private citizens or others to be performed in the designated Collection Service Area during the period of this Agreement.
5. Alteration of placards placed on certified trucks and/or trailers.

Any disputes regarding Performance of Contractor will be presented to the Emergency Management Coordinator or designee for review. The Emergency Management Coordinator or designee shall complete review and make determination within three (3) calendar days. Decisions of the Emergency Management Coordinator or designee shall be final.

EXHIBIT "B"

FEE SCHEDULE

PROPOSAL FORM 3 – PRICE PROPOSAL

PART A – VOLUME BASED PRICING FOR 3,000,000 CUBIC YARD (CY) DEBRIS DISASTER

ITEM/DESCRIPTION	ESTIMATED QUANTITY	UNIT	PRICE PER CY	EXTENSION
1.0 Public Property and Right of Way Collection, Loading and Hauling to a designated TDMS.				
A. Vegetation	2,500,000	CY	$8.32	$20,800,000.00
B. Construction Debris / Mixed Debris	500,000	CY	$8.84	$4,420,000.00
2.0 TDMS operation to include placement of monitoring towers, portable toilets, keeping on-site and adjacent roads area clean of trash and garbage, debris acceptance, pile management, and Phase I Reclamation.	3,000,000	CY	$1.12	$3,360,000.00
3.0 Processing of debris through grinding and/or chipping.	2,500,000	CY	$2.88	$7,200,000.00
4.0 Loading, hauling and disposing wood chips to final destination. ***(This rate includes disposal cost)***	1,000,000	CY	$4.88	$4,880,000.00
5.0 Loading and hauling of construction debris and/or mixed debris from TDMS to a permitted C&D recycling facility or any other designated Disposal Facility. ***(This rate shall not include disposal cost). Based on miles from TDMS to final destination– 1 way.***				
A. 0 ≤ 20 miles	500,000	CY	$3.74	
B. > 20 ≤ 50 miles	500,000	CY	$5.62	
C. > 50 ≤ 100 miles	500,000	CY	$5.98	
AVERAGE: (Item 6.0 A-C)			$5.11	
AVERAGE: (Item 5.0 A-C) **X 500,000** CY =				$ 2,555,000.00
TOTAL PROPOSAL PRICE: (Items 1.0 - 5.0)				$ 43,215,000.00

PROPOSER MUST PROVIDE PRICE FOR ALL LINE ITEMS 1 THRU 6. FAILURE TO DO SO MAY RENDER YOUR PROPOSAL TO BE DEEMED NON-RESPONSIVE.

Unit Prices, unless otherwise indicated, shall include all labor (operators, laborers, supervisors) and materials including but not limited to: supplies, equipment maintenance, repairs, repair parts, fuels, lubricants, cellular phones, transportation, and housing, if required, necessary to accomplish the project. The quantities and distributions are estimated for the purpose of making an award. Locations of sites, debris quantities, destinations, material densities, etc. may differ substantially in an actual disaster.

Assumptions: 3,000,000 cubic yards of debris consisting of 2,500,000 cubic yards of vegetation debris and 500,000 cubic yards of mixed debris.

PROPOSAL FORM 3 – PRICE PROPOSAL

PART B – HOURLY RATES

TDMS SET-UP AND CLOSURE AND DEBRIS CLEARANCE FOR ACCESS - OPTIONAL USE BY COUNTY AND OTHER GOVERNMENTAL ENTITIES			
EQUIPMENT AND LABOR RATES			
EQUIPMENT TYPE	HOURLY EQUIPMENT RATE	HOURLY LABOR RATE	TOTAL HOURLY RATE
Bobcat Loader	$60.00	$50.00	$110.00
Crew Foreman w/ Cell Phone and Pickup	$10.00	$90.00	$100.00
Dozer, Tracked, D5 or similar	$50.00	$50.00	$100.00
Dozer, Tracked, D6 or similar	$70.00	$50.00	$120.00
Dozer, Tracked, D7 or similar	$90.00	$50.00	$140.00
Dozer, Tracked, D8 or similar	$110.00	$50.00	$160.00
Dump Truck, 18 CY-20 CY	$50.00	$50.00	$100.00
Dump Truck, 21CY-30 CY	$60.00	$50.00	$110.00
Generator and Lighting	$25.00	$15.00	$40.00
Grader w/ 12' Blade	$125.00	$50.00	$175.00
Hydraulic Excavator, 1.5 CY	$85.00	$50.00	$135.00
Hydraulic Excavator, 2.5 CY	$110.00	$50.00	$160.00
Knuckleboom Loader	$125.00	$50.00	$175.00
Laborer w/ Chain Saw	$15.00	$55.00	$70.00
Laborer w/ small tools, traffic control, flag person	$8.00	$45.00	$53.00
Lowboy Trailer w/ Tractor	$90.00	$50.00	$140.00
Operations Manager w/ Cell Phone and Pickup	$10.00	$120.00	$130.00
Pickup Truck, .5 Ton	$25.00	$0.00	$25.00
Soil Compactor 81 HP+	$75.00	$50.00	$125.00
Soil Compactor to 80 HP	$55.00	$50.00	$105.00
Soil Compactor, Towed Unit	$35.00	$50.00	$85.00
Truck, Flatbed	$30.00	$50.00	$80.00
Tub Grinder, 800 to 1,000 HP	$495.00	$50.00	$545.00
Water Truck	$95.00	$50.00	$145.00
Wheel Loader, 2.5 CY, 950 or similar	$125.00	$50.00	$175.00
Wheel Loader, 3.5-4.0 CY, 966 or similar	$135.00	$50.00	$185.00
Wheel Loader, 4.5 CY, 980 or similar	$195.00	$50.00	$245.00
Wheel Loader-Backhoe, 1.0-1.5 CY	$95.00	$50.00	$145.00
Other – Please List			

Attach additional sheet with equipment type and labor rates, if needed

PROPOSAL FORM 3 – PRICE PROPOSAL

PART C – UNIT COST SCHEDULE

ITEM	HAZARDOUS STUMP REMOVAL, HAULING, AND DISPOSAL	UNIT	UNIT COST
1.	24-inch diameter to 48.99-inch diameter	Stump	$275.00
2.	49-inch diameter and greater	Stump	$425.00
3.	Stump Fill Dirt – Fill dirt for stump holes after removal	CY	$0.10
	HAZARDOUS HANGING LIMBS (HANGERS) To include removal of all hanging limbs. Limbs to be cut and placed on the right of way for collection as vegetative debris.		
4.	2-inch diameter and greater	Tree	$85.50
	HAZARDOUS TREE REMOVAL Trees to be flush cut at ground level and placed on the right of way for removal as vegetative debris.		
5.	6-inch diameter to 11.99-inch diameter	Tree	$45.00
6.	12-inch diameter to 23.99-inch diameter	Tree	$125.00
7.	24-inch diameter to 35.99-inch diameter	Tree	$225.00
8.	36-inch diameter to 47.99-inch diameter	Tree	$275.00
8.	48-inch diameter and greater	Tree	$395.00

NOTE:
The following is information only and will NOT be considered in the evaluation of this RFP

The AUTHORITY reserves the right to use this contract to handle small quantities of debris removal and as support for our Franchise Contracts as needed. Below is a daily rate to remove debris. The AUTHORITY will pay for the disposal cost. There is no requirement to provide a rate, however if you do, we expect your company to honor this special service and respond within 48 hours at the rate below.

COLLECTION SERVICE ONLY	
EQUIPMENT	DAILY RATE (10 HRS/DAY)
Knuckleboom Loader and Operator	$ 2,250.00

ATTACHMENT "A"

SOLID WASTE AUTHORITY
OF PALM BEACH COUNTY

7501 North Jog Road
West Palm Beach, Florida 33412
Telephone: 561-640-4000 • Fax: 561-640-3400

TASK ORDER
DISASTER DEBRIS MANAGEMENT

TO_____
Task Order No.

In accordance with _____(Contractor) contract, with the Solid Waste Authority of PBC, Florida, (AUTHORITY) Agreement No._____ for Hurricane/Disaster Debris Removal, Reduction, and Disposal dated _____ the AUTHORITY hereby requests and authorizes the services to be performed on the project as described below:

Project: _____

Specific Work to be performed: _____

_____

_____

_____

_____

_____

Duration of Work (Include Start Date, End Date and Total Calendar Days): _____

_____

_____

_____

Method of Payment: _____

_____

_____

Estimated Cost of this Task Order: $_____

Contractor Signature: _____ Date: _____

AUTHORITY Signature: _____ Date: _____

SWA Use Only					
SWA Requestor/Monitor:	_____			Date:	_____
SWA Dept. Director:	_____			Date:	_____
Vendor No.:	_____	Account No.:	_____	Project:	_____
Purchasing:	_____	Budget:	_____	Accounting:	_____

ATTACHMENT "B"

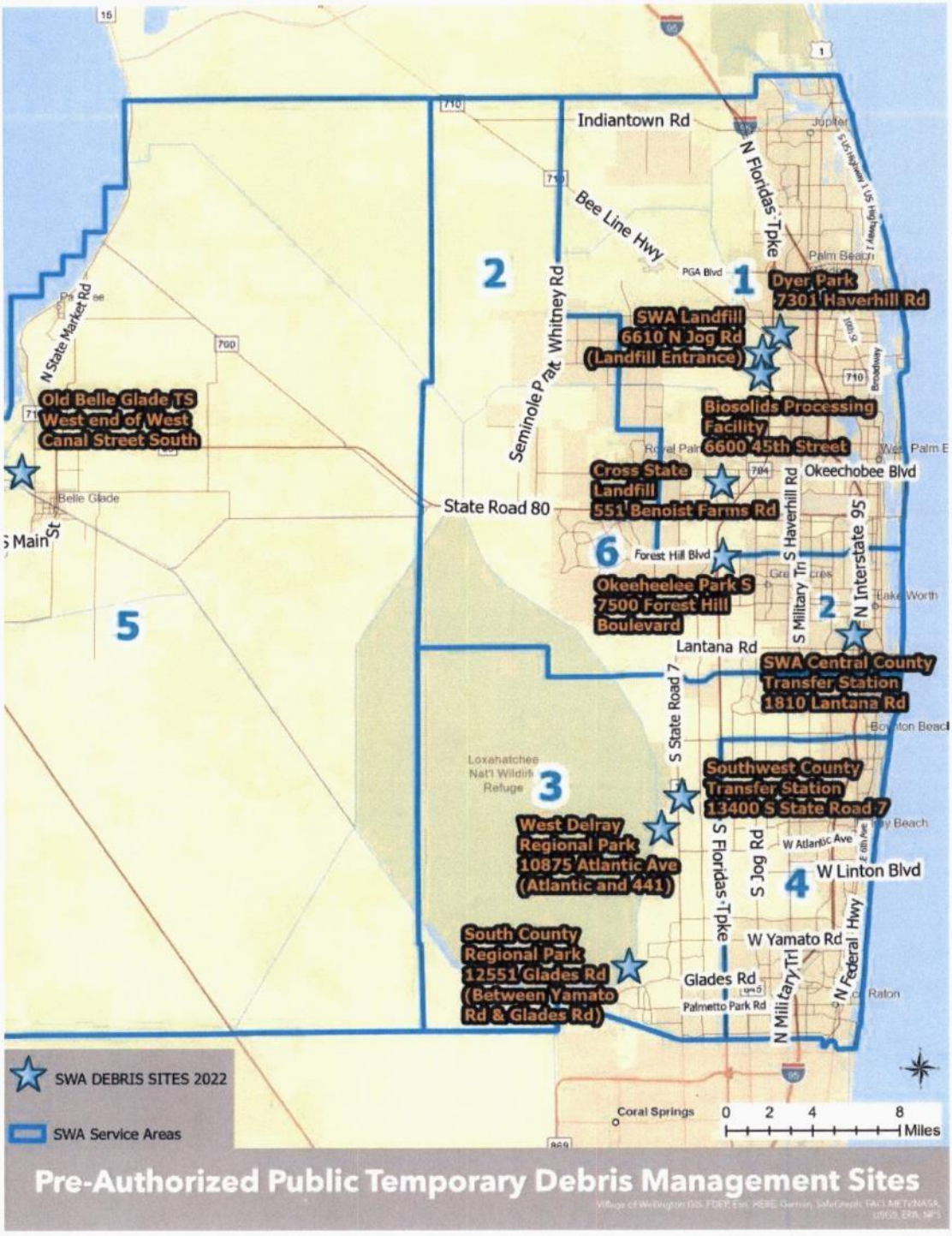

ATTACHMENT "C"

PUBLIC ASSISTANCE PROGRAM AND POLICY GUIDE

The Public Assistance Program and Policy Guide, Version 4, Effective June 1, 2020 (see hyperlink below) is the most recent reference material that will provide additional information:
https://www.fema.gov/sites/default/files/documents/fema_pappg-v4-updated-links_policy_6-1-2020.pdf

PROJECT MANAGEMENT

Project management begins when a disaster occurs and does not end until an applicant has received final payment for the project. Good project management ensures successful recovery from the disaster, expedited payment of funds, and more efficient close-outs of PA Program grants.

Record Keeping

It is critical that the applicant establish and maintain accurate records of events and expenditures related to disaster recovery work. The information required for documentation describes the "who, what, when, where, why, and how much" for each item of disaster recovery work. The applicant should have a financial and record keeping system in place that can be used to track these elements. The importance of maintaining a complete and accurate set of records for each project cannot be over-emphasized. Good documentation facilitates the project formulation, validation, approval, and funding processes.

All of the documentation pertaining to a project should be filed with the corresponding *PW* and maintained by the applicant as the permanent record of the project. These records become the basis for verification of the accuracy of project cost estimates during validation of small projects, reconciliation of costs for large projects, and audits.

Applicants should begin the record keeping process before a disaster is declared by the President. To ensure that work performed both before and after a disaster declaration is well documented, potential applicants should:

- designate a person to coordinate the compilation and filing of records;
- establish a file for each site where work has been or will be performed; and
- maintain accurate disbursement and accounting records to document the work performed and the costs incurred.

The Federal Office of Management and Budget requires grant recipients to maintain financial and program records on file for three years following final payment. Records of grant recipients may be subject to the provisions of the Single Audit Act, as described on page 117 of this guide. Applicants may refer to the Applicant Handbook, FEMA 323, for additional information regarding record-keeping.

ATTACHMENT "D"

MOBILIZATION SCHEDULE

CONTRACTOR shall commence mobilization of equipment, operators, and laborers immediately upon receipt of a Mobilization Task Order to meet the progress pattern set below.

	Category 1 & 2	Category 3	Category 4	Category 5
Within 24 hours	25%	25%	20%	15%
Within 48 hours	30%	30%	30%	25%
Within 72 hours	40%	40%	40%	40%
Within 96 hours	60%	60%	50%	50%
Within 5 days	100%	80%	60%	60%
Within 10 days		100%	80%	70%
Within 14 days			100%	80%
Within 20 days				100%

ATTACHMENT "E"

FHWA-1273

FHWA-1273 – Revised May 1, 2012

REQUIRED CONTRACT PROVISIONS
FEDERAL-AID CONSTRUCTION CONTRACTS

I. General
II. Nondiscrimination
III. Nonsegregated Facilities
IV. Davis-Bacon and Related Act Provisions
V. Contract Work Hours and Safety Standards Act Provisions
VI. Subletting or Assigning the Contract
VII. Safety: Accident Prevention
VIII. False Statements Concerning Highway Projects
IX. Implementation of Clean Air Act and Federal Water Pollution Control Act
X. Compliance with Governmentwide Suspension and Debarment Requirements
XI. Certification Regarding Use of Contract Funds for Lobbying

ATTACHMENTS

A. Employment and Materials Preference for Appalachian Development Highway System or Appalachian Local Access Road Contracts (included in Appalachian contracts only)

I. GENERAL

1. Form FHWA-1273 must be physically incorporated in each construction contract funded under Title 23 (excluding emergency contracts solely intended for debris removal). The contractor (or subcontractor) must insert this form in each subcontract and further require its inclusion in all lower tier subcontracts (excluding purchase orders, rental agreements and other agreements for supplies or services).

The applicable requirements of Form FHWA-1273 are incorporated by reference for work done under any purchase order, rental agreement or agreement for other services. The prime contractor shall be responsible for compliance by any subcontractor, lower-tier subcontractor or service provider.

Form FHWA-1273 must be included in all Federal-aid design-build contracts, in all subcontracts and in lower tier subcontracts (excluding subcontracts for design services, purchase orders, rental agreements and other agreements for supplies or services). The design-builder shall be responsible for compliance by any subcontractor, lower-tier subcontractor or service provider.

Contracting agencies may reference Form FHWA-1273 in bid proposal or request for proposal documents, however, the Form FHWA-1273 must be physically incorporated (not referenced) in all contracts, subcontracts and lower-tier subcontracts (excluding purchase orders, rental agreements and other agreements for supplies or services related to a construction contract).

2. Subject to the applicability criteria noted in the following sections, these contract provisions shall apply to all work performed on the contract by the contractor's own organization and with the assistance of workers under the contractor's immediate superintendence and to all work performed on the contract by piecework, station work, or by subcontract.

3. A breach of any of the stipulations contained in these Required Contract Provisions may be sufficient grounds for withholding of progress payments, withholding of final payment, termination of the contract, suspension / debarment or any other action determined to be appropriate by the contracting agency and FHWA.

4. Selection of Labor: During the performance of this contract, the contractor shall not use convict labor for any purpose within the limits of a construction project on a Federal-aid highway unless it is labor performed by convicts who are on parole, supervised release, or probation. The term Federal-aid highway does not include roadways functionally classified as local roads or rural minor collectors.

II. NONDISCRIMINATION

The provisions of this section related to 23 CFR Part 230 are applicable to all Federal-aid construction contracts and to all related construction subcontracts of $10,000 or more. The provisions of 23 CFR Part 230 are not applicable to material supply, engineering, or architectural service contracts.

In addition, the contractor and all subcontractors must comply with the following policies: Executive Order 11246, 41 CFR 60, 29 CFR 1625-1627, Title 23 USC Section 140, the Rehabilitation Act of 1973, as amended (29 USC 794), Title VI of the Civil Rights Act of 1964, as amended, and related regulations including 49 CFR Parts 21, 26 and 27; and 23 CFR Parts 200, 230, and 633.

The contractor and all subcontractors must comply with: the requirements of the Equal Opportunity Clause in 41 CFR 60-1.4(b) and, for all construction contracts exceeding $10,000, the Standard Federal Equal Employment Opportunity Construction Contract Specifications in 41 CFR 60-4.3.

Note: The U.S. Department of Labor has exclusive authority to determine compliance with Executive Order 11246 and the policies of the Secretary of Labor including 41 CFR 60, and 29 CFR 1625-1627. The contracting agency and the FHWA have the authority and the responsibility to ensure compliance with Title 23 USC Section 140, the Rehabilitation Act of 1973, as amended (29 USC 794), and Title VI of the Civil Rights Act of 1964, as amended, and related regulations including 49 CFR Parts 21, 26 and 27; and 23 CFR Parts 200, 230, and 633.

The following provision is adopted from 23 CFR 230, Appendix A, with appropriate revisions to conform to the U.S. Department of Labor (US DOL) and FHWA requirements.

1. Equal Employment Opportunity: Equal employment opportunity (EEO) requirements not to discriminate and to take affirmative action to assure equal opportunity as set forth under laws, executive orders, rules, regulations (28 CFR 35, 29 CFR 1630, 29 CFR 1625-1627, 41 CFR 60 and 49 CFR 27) and orders of the Secretary of Labor as modified by the provisions prescribed herein, and imposed pursuant to 23 U.S.C. 140 shall constitute the EEO and specific affirmative action standards for the contractor's project activities under

this contract. The provisions of the Americans with Disabilities Act of 1990 (42 U.S.C. 12101 et seq.) set forth under 28 CFR 35 and 29 CFR 1630 are incorporated by reference in this contract. In the execution of this contract, the contractor agrees to comply with the following minimum specific requirement activities of EEO:

a. The contractor will work with the contracting agency and the Federal Government to ensure that it has made every good faith effort to provide equal opportunity with respect to all of its terms and conditions of employment and in their review of activities under the contract.

b. The contractor will accept as its operating policy the following statement:

"It is the policy of this Company to assure that applicants are employed, and that employees are treated during employment, without regard to their race, religion, sex, color, national origin, age or disability. Such action shall include: employment, upgrading, demotion, or transfer; recruitment or recruitment advertising; layoff or termination; rates of pay or other forms of compensation; and selection for training, including apprenticeship, pre-apprenticeship, and/or on-the-job training."

2. EEO Officer: The contractor will designate and make known to the contracting officers an EEO Officer who will have the responsibility for and must be capable of effectively administering and promoting an active EEO program and who must be assigned adequate authority and responsibility to do so.

3. Dissemination of Policy: All members of the contractor's staff who are authorized to hire, supervise, promote, and discharge employees, or who recommend such action, or who are substantially involved in such action, will be made fully cognizant of, and will implement, the contractor's EEO policy and contractual responsibilities to provide EEO in each grade and classification of employment. To ensure that the above agreement will be met, the following actions will be taken as a minimum:

a. Periodic meetings of supervisory and personnel office employees will be conducted before the start of work and then not less often than once every six months, at which time the contractor's EEO policy and its implementation will be reviewed and explained. The meetings will be conducted by the EEO Officer.

b. All new supervisory or personnel office employees will be given a thorough indoctrination by the EEO Officer, covering all major aspects of the contractor's EEO obligations within thirty days following their reporting for duty with the contractor.

c. All personnel who are engaged in direct recruitment for the project will be instructed by the EEO Officer in the contractor's procedures for locating and hiring minorities and women.

d. Notices and posters setting forth the contractor's EEO policy will be placed in areas readily accessible to employees, applicants for employment and potential employees.

e. The contractor's EEO policy and the procedures to implement such policy will be brought to the attention of employees by means of meetings, employee handbooks, or other appropriate means.

4. Recruitment: When advertising for employees, the contractor will include in all advertisements for employees the notation: "An Equal Opportunity Employer." All such advertisements will be placed in publications having a large circulation among minorities and women in the area from which the project work force would normally be derived.

a. The contractor will, unless precluded by a valid bargaining agreement, conduct systematic and direct recruitment through public and private employee referral sources likely to yield qualified minorities and women. To meet this requirement, the contractor will identify sources of potential minority group employees, and establish with such identified sources procedures whereby minority and women applicants may be referred to the contractor for employment consideration.

b. In the event the contractor has a valid bargaining agreement providing for exclusive hiring hall referrals, the contractor is expected to observe the provisions of that agreement to the extent that the system meets the contractor's compliance with EEO contract provisions. Where implementation of such an agreement has the effect of discriminating against minorities or women, or obligates the contractor to do the same, such implementation violates Federal nondiscrimination provisions.

c. The contractor will encourage its present employees to refer minorities and women as applicants for employment. Information and procedures with regard to referring such applicants will be discussed with employees.

5. Personnel Actions: Wages, working conditions, and employee benefits shall be established and administered, and personnel actions of every type, including hiring, upgrading, promotion, transfer, demotion, layoff, and termination, shall be taken without regard to race, color, religion, sex, national origin, age or disability. The following procedures shall be followed:

a. The contractor will conduct periodic inspections of project sites to insure that working conditions and employee facilities do not indicate discriminatory treatment of project site personnel.

b. The contractor will periodically evaluate the spread of wages paid within each classification to determine any evidence of discriminatory wage practices.

c. The contractor will periodically review selected personnel actions in depth to determine whether there is evidence of discrimination. Where evidence is found, the contractor will promptly take corrective action. If the review indicates that the discrimination may extend beyond the actions reviewed, such corrective action shall include all affected persons.

d. The contractor will promptly investigate all complaints of alleged discrimination made to the contractor in connection with its obligations under this contract, will attempt to resolve such complaints, and will take appropriate corrective action within a reasonable time. If the investigation indicates that the discrimination may affect persons other than the complainant, such corrective action shall include such other persons. Upon completion of each investigation, the contractor will inform every complainant of all of their avenues of appeal.

6. Training and Promotion:

a. The contractor will assist in locating, qualifying, and increasing the skills of minorities and women who are

applicants for employment or current employees. Such efforts should be aimed at developing full journey level status employees in the type of trade or job classification involved.

b. Consistent with the contractor's work force requirements and as permissible under Federal and State regulations, the contractor shall make full use of training programs, i.e., apprenticeship, and on-the-job training programs for the geographical area of contract performance. In the event a special provision for training is provided under this contract, this subparagraph will be superseded as indicated in the special provision. The contracting agency may reserve training positions for persons who receive welfare assistance in accordance with 23 U.S.C. 140(a).

c. The contractor will advise employees and applicants for employment of available training programs and entrance requirements for each.

d. The contractor will periodically review the training and promotion potential of employees who are minorities and women and will encourage eligible employees to apply for such training and promotion.

7. Unions: If the contractor relies in whole or in part upon unions as a source of employees, the contractor will use good faith efforts to obtain the cooperation of such unions to increase opportunities for minorities and women. Actions by the contractor, either directly or through a contractor's association acting as agent, will include the procedures set forth below:

a. The contractor will use good faith efforts to develop, in cooperation with the unions, joint training programs aimed toward qualifying more minorities and women for membership in the unions and increasing the skills of minorities and women so that they may qualify for higher paying employment.

b. The contractor will use good faith efforts to incorporate an EEO clause into each union agreement to the end that such union will be contractually bound to refer applicants without regard to their race, color, religion, sex, national origin, age or disability.

c. The contractor is to obtain information as to the referral practices and policies of the labor union except that to the extent such information is within the exclusive possession of the labor union and such labor union refuses to furnish such information to the contractor, the contractor shall so certify to the contracting agency and shall set forth what efforts have been made to obtain such information.

d. In the event the union is unable to provide the contractor with a reasonable flow of referrals within the time limit set forth in the collective bargaining agreement, the contractor will, through independent recruitment efforts, fill the employment vacancies without regard to race, color, religion, sex, national origin, age or disability; making full efforts to obtain qualified and/or qualifiable minorities and women. The failure of a union to provide sufficient referrals (even though it is obligated to provide exclusive referrals under the terms of a collective bargaining agreement) does not relieve the contractor from the requirements of this paragraph. In the event the union referral practice prevents the contractor from meeting the obligations pursuant to Executive Order 11246, as amended, and these special provisions, such contractor shall immediately notify the contracting agency.

8. Reasonable Accommodation for Applicants / Employees with Disabilities: The contractor must be familiar with the requirements for and comply with the Americans with Disabilities Act and all rules and regulations established there under. Employers must provide reasonable accommodation in all employment activities unless to do so would cause an undue hardship.

9. Selection of Subcontractors, Procurement of Materials and Leasing of Equipment: The contractor shall not discriminate on the grounds of race, color, religion, sex, national origin, age or disability in the selection and retention of subcontractors, including procurement of materials and leases of equipment. The contractor shall take all necessary and reasonable steps to ensure nondiscrimination in the administration of this contract.

a. The contractor shall notify all potential subcontractors and suppliers and lessors of their EEO obligations under this contract.

b. The contractor will use good faith efforts to ensure subcontractor compliance with their EEO obligations.

10. Assurance Required by 49 CFR 26.13(b):

a. The requirements of 49 CFR Part 26 and the State DOT's U.S. DOT-approved DBE program are incorporated by reference.

b. The contractor or subcontractor shall not discriminate on the basis of race, color, national origin, or sex in the performance of this contract. The contractor shall carry out applicable requirements of 49 CFR Part 26 in the award and administration of DOT-assisted contracts. Failure by the contractor to carry out these requirements is a material breach of this contract, which may result in the termination of this contract or such other remedy as the contracting agency deems appropriate.

11. Records and Reports: The contractor shall keep such records as necessary to document compliance with the EEO requirements. Such records shall be retained for a period of three years following the date of the final payment to the contractor for all contract work and shall be available at reasonable times and places for inspection by authorized representatives of the contracting agency and the FHWA.

a. The records kept by the contractor shall document the following:

(1) The number and work hours of minority and non-minority group members and women employed in each work classification on the project;

(2) The progress and efforts being made in cooperation with unions, when applicable, to increase employment opportunities for minorities and women; and

(3) The progress and efforts being made in locating, hiring, training, qualifying, and upgrading minorities and women;

b. The contractors and subcontractors will submit an annual report to the contracting agency each July for the duration of the project, indicating the number of minority, women, and non-minority group employees currently engaged in each work classification required by the contract work. This information is to be reported on Form FHWA-1391. The staffing data should represent the project work force on board in all or any part of the last payroll period preceding the end of July. If on-the-job training is being required by special provision, the contractor

will be required to collect and report training data. The employment data should reflect the work force on board during all or any part of the last payroll period preceding the end of July.

III. NONSEGREGATED FACILITIES

This provision is applicable to all Federal-aid construction contracts and to all related construction subcontracts of $10,000 or more.

The contractor must ensure that facilities provided for employees are provided in such a manner that segregation on the basis of race, color, religion, sex, or national origin cannot result. The contractor may neither require such segregated use by written or oral policies nor tolerate such use by employee custom. The contractor's obligation extends further to ensure that its employees are not assigned to perform their services at any location, under the contractor's control, where the facilities are segregated. The term "facilities" includes waiting rooms, work areas, restaurants and other eating areas, time clocks, restrooms, washrooms, locker rooms, and other storage or dressing areas, parking lots, drinking fountains, recreation or entertainment areas, transportation, and housing provided for employees. The contractor shall provide separate or single-user restrooms and necessary dressing or sleeping areas to assure privacy between sexes.

IV. DAVIS-BACON AND RELATED ACT PROVISIONS

This section is applicable to all Federal-aid construction projects exceeding $2,000 and to all related subcontracts and lower-tier subcontracts (regardless of subcontract size). The requirements apply to all projects located within the right-of-way of a roadway that is functionally classified as Federal-aid highway. This excludes roadways functionally classified as local roads or rural minor collectors, which are exempt. Contracting agencies may elect to apply these requirements to other projects.

The following provisions are from the U.S. Department of Labor regulations in 29 CFR 5.5 "Contract provisions and related matters" with minor revisions to conform to the FHWA-1273 format and FHWA program requirements.

1. Minimum wages

a. All laborers and mechanics employed or working upon the site of the work, will be paid unconditionally and not less often than once a week, and without subsequent deduction or rebate on any account (except such payroll deductions as are permitted by regulations issued by the Secretary of Labor under the Copeland Act (29 CFR part 3)), the full amount of wages and bona fide fringe benefits (or cash equivalents thereof) due at time of payment computed at rates not less than those contained in the wage determination of the Secretary of Labor which is attached hereto and made a part hereof, regardless of any contractual relationship which may be alleged to exist between the contractor and such laborers and mechanics.

Contributions made or costs reasonably anticipated for bona fide fringe benefits under section 1(b)(2) of the Davis-Bacon Act on behalf of laborers or mechanics are considered wages paid to such laborers or mechanics, subject to the provisions of paragraph 1.d. of this section; also, regular contributions made or costs incurred for more than a weekly period (but not less often than quarterly) under plans, funds, or programs which cover the particular weekly period, are deemed to be constructively made or incurred during such weekly period. Such laborers and mechanics shall be paid the appropriate wage rate and fringe benefits on the wage determination for the classification of work actually performed, without regard to skill, except as provided in 29 CFR 5.5(a)(4). Laborers or mechanics performing work in more than one classification may be compensated at the rate specified for each classification for the time actually worked therein: Provided, That the employer's payroll records accurately set forth the time spent in each classification in which work is performed. The wage determination (including any additional classification and wage rates conformed under paragraph 1.b. of this section) and the Davis-Bacon poster (WH–1321) shall be posted at all times by the contractor and its subcontractors at the site of the work in a prominent and accessible place where it can be easily seen by the workers.

b.(1) The contracting officer shall require that any class of laborers or mechanics, including helpers, which is not listed in the wage determination and which is to be employed under the contract shall be classified in conformance with the wage determination. The contracting officer shall approve an additional classification and wage rate and fringe benefits therefore only when the following criteria have been met:

(i) The work to be performed by the classification requested is not performed by a classification in the wage determination; and

(ii) The classification is utilized in the area by the construction industry; and

(iii) The proposed wage rate, including any bona fide fringe benefits, bears a reasonable relationship to the wage rates contained in the wage determination.

(2) If the contractor and the laborers and mechanics to be employed in the classification (if known), or their representatives, and the contracting officer agree on the classification and wage rate (including the amount designated for fringe benefits where appropriate), a report of the action taken shall be sent by the contracting officer to the Administrator of the Wage and Hour Division, Employment Standards Administration, U.S. Department of Labor, Washington, DC 20210. The Administrator, or an authorized representative, will approve, modify, or disapprove every additional classification action within 30 days of receipt and so advise the contracting officer or will notify the contracting officer within the 30-day period that additional time is necessary.

(3) In the event the contractor, the laborers or mechanics to be employed in the classification or their representatives, and the contracting officer do not agree on the proposed classification and wage rate (including the amount designated for fringe benefits, where appropriate), the contracting officer shall refer the questions, including the views of all interested parties and the recommendation of the contracting officer, to the Wage and Hour Administrator for determination. The Wage and Hour Administrator, or an authorized representative, will issue a determination within 30 days of receipt and so advise the contracting officer or

will notify the contracting officer within the 30-day period that additional time is necessary.

(4) The wage rate (including fringe benefits where appropriate) determined pursuant to paragraphs 1.b.(2) or 1.b.(3) of this section, shall be paid to all workers performing work in the classification under this contract from the first day on which work is performed in the classification.

c. Whenever the minimum wage rate prescribed in the contract for a class of laborers or mechanics includes a fringe benefit which is not expressed as an hourly rate, the contractor shall either pay the benefit as stated in the wage determination or shall pay another bona fide fringe benefit or an hourly cash equivalent thereof.

d. If the contractor does not make payments to a trustee or other third person, the contractor may consider as part of the wages of any laborer or mechanic the amount of any costs reasonably anticipated in providing bona fide fringe benefits under a plan or program, Provided, That the Secretary of Labor has found, upon the written request of the contractor, that the applicable standards of the Davis-Bacon Act have been met. The Secretary of Labor may require the contractor to set aside in a separate account assets for the meeting of obligations under the plan or program.

2. Withholding

The contracting agency shall upon its own action or upon written request of an authorized representative of the Department of Labor, withhold or cause to be withheld from the contractor under this contract, or any other Federal contract with the same prime contractor, or any other federally-assisted contract subject to Davis-Bacon prevailing wage requirements, which is held by the same prime contractor, so much of the accrued payments or advances as may be considered necessary to pay laborers and mechanics, including apprentices, trainees, and helpers, employed by the contractor or any subcontractor the full amount of wages required by the contract. In the event of failure to pay any laborer or mechanic, including any apprentice, trainee, or helper, employed or working on the site of the work, all or part of the wages required by the contract, the contracting agency may, after written notice to the contractor, take such action as may be necessary to cause the suspension of any further payment, advance, or guarantee of funds until such violations have ceased.

3. Payrolls and basic records

a. Payrolls and basic records relating thereto shall be maintained by the contractor during the course of the work and preserved for a period of three years thereafter for all laborers and mechanics working at the site of the work. Such records shall contain the name, address, and social security number of each such worker, his or her correct classification, hourly rates of wages paid (including rates of contributions or costs anticipated for bona fide fringe benefits or cash equivalents thereof of the types described in section 1(b)(2)(B) of the Davis-Bacon Act), daily and weekly number of hours worked, deductions made and actual wages paid. Whenever the Secretary of Labor has found under 29 CFR 5.5(a)(1)(iv) that the wages of any laborer or mechanic include the amount of any costs reasonably anticipated in providing benefits under a plan or program described in section 1(b)(2)(B) of the Davis-Bacon Act, the contractor shall maintain records which show that the commitment to provide such benefits is enforceable, that the plan or program is financially responsible, and that the plan or program has been communicated in writing to the laborers or mechanics affected, and records which show the costs anticipated or the actual cost incurred in providing such benefits. Contractors employing apprentices or trainees under approved programs shall maintain written evidence of the registration of apprenticeship programs and certification of trainee programs, the registration of the apprentices and trainees, and the ratios and wage rates prescribed in the applicable programs.

b.(1) The contractor shall submit weekly for each week in which any contract work is performed a copy of all payrolls to the contracting agency. The payrolls submitted shall set out accurately and completely all of the information required to be maintained under 29 CFR 5.5(a)(3)(i), except that full social security numbers and home addresses shall not be included on weekly transmittals. Instead the payrolls shall only need to include an individually identifying number for each employee (e.g. , the last four digits of the employee's social security number). The required weekly payroll information may be submitted in any form desired. Optional Form WH–347 is available for this purpose from the Wage and Hour Division Web site at http://www.dol.gov/esa/whd/forms/wh347instr.htm or its successor site. The prime contractor is responsible for the submission of copies of payrolls by all subcontractors. Contractors and subcontractors shall maintain the full social security number and current address of each covered worker, and shall provide them upon request to the contracting agency for transmission to the State DOT, the FHWA or the Wage and Hour Division of the Department of Labor for purposes of an investigation or audit of compliance with prevailing wage requirements. It is not a violation of this section for a prime contractor to require a subcontractor to provide addresses and social security numbers to the prime contractor for its own records, without weekly submission to the contracting agency..

(2) Each payroll submitted shall be accompanied by a "Statement of Compliance," signed by the contractor or subcontractor or his or her agent who pays or supervises the payment of the persons employed under the contract and shall certify the following:

(i) That the payroll for the payroll period contains the information required to be provided under §5.5 (a)(3)(ii) of Regulations, 29 CFR part 5, the appropriate information is being maintained under §5.5 (a)(3)(i) of Regulations, 29 CFR part 5, and that such information is correct and complete;

(ii) That each laborer or mechanic (including each helper, apprentice, and trainee) employed on the contract during the payroll period has been paid the full weekly wages earned, without rebate, either directly or indirectly, and that no deductions have been made either directly or indirectly from the full wages earned, other than permissible deductions as set forth in Regulations, 29 CFR part 3;

(iii) That each laborer or mechanic has been paid not less than the applicable wage rates and fringe benefits or cash equivalents for the classification of work performed, as specified in the applicable wage determination incorporated into the contract.

(3) The weekly submission of a properly executed certification set forth on the reverse side of Optional Form WH–347 shall satisfy the requirement for submission of the "Statement of Compliance" required by paragraph 3.b.(2) of this section.

(4) The falsification of any of the above certifications may subject the contractor or subcontractor to civil or criminal prosecution under section 1001 of title 18 and section 231 of title 31 of the United States Code.

c. The contractor or subcontractor shall make the records required under paragraph 3.a. of this section available for inspection, copying, or transcription by authorized representatives of the contracting agency, the State DOT, the FHWA, or the Department of Labor, and shall permit such representatives to interview employees during working hours on the job. If the contractor or subcontractor fails to submit the required records or to make them available, the FHWA may, after written notice to the contractor, the contracting agency or the State DOT, take such action as may be necessary to cause the suspension of any further payment, advance, or guarantee of funds. Furthermore, failure to submit the required records upon request or to make such records available may be grounds for debarment action pursuant to 29 CFR 5.12.

4. Apprentices and trainees

a. Apprentices (programs of the USDOL).

Apprentices will be permitted to work at less than the predetermined rate for the work they performed when they are employed pursuant to and individually registered in a bona fide apprenticeship program registered with the U.S. Department of Labor, Employment and Training Administration, Office of Apprenticeship Training, Employer and Labor Services, or with a State Apprenticeship Agency recognized by the Office, or if a person is employed in his or her first 90 days of probationary employment as an apprentice in such an apprenticeship program, who is not individually registered in the program, but who has been certified by the Office of Apprenticeship Training, Employer and Labor Services or a State Apprenticeship Agency (where appropriate) to be eligible for probationary employment as an apprentice.

The allowable ratio of apprentices to journeymen on the job site in any craft classification shall not be greater than the ratio permitted to the contractor as to the entire work force under the registered program. Any worker listed on a payroll at an apprentice wage rate, who is not registered or otherwise employed as stated above, shall be paid not less than the applicable wage rate on the wage determination for the classification of work actually performed. In addition, any apprentice performing work on the job site in excess of the ratio permitted under the registered program shall be paid not less than the applicable wage rate on the wage determination for the work actually performed. Where a contractor is performing construction on a project in a locality other than that in which its program is registered, the ratios and wage rates (expressed in percentages of the journeyman's hourly rate) specified in the contractor's or subcontractor's registered program shall be observed.

Every apprentice must be paid at not less than the rate specified in the registered program for the apprentice's level of progress, expressed as a percentage of the journeymen hourly rate specified in the applicable wage determination. Apprentices shall be paid fringe benefits in accordance with the provisions of the apprenticeship program. If the apprenticeship program does not specify fringe benefits, apprentices must be paid the full amount of fringe benefits listed on the wage determination for the applicable classification. If the Administrator determines that a different practice prevails for the applicable apprentice classification, fringes shall be paid in accordance with that determination.

In the event the Office of Apprenticeship Training, Employer and Labor Services, or a State Apprenticeship Agency recognized by the Office, withdraws approval of an apprenticeship program, the contractor will no longer be permitted to utilize apprentices at less than the applicable predetermined rate for the work performed until an acceptable program is approved.

b. Trainees (programs of the USDOL).

Except as provided in 29 CFR 5.16, trainees will not be permitted to work at less than the predetermined rate for the work performed unless they are employed pursuant to and individually registered in a program which has received prior approval, evidenced by formal certification by the U.S. Department of Labor, Employment and Training Administration.

The ratio of trainees to journeymen on the job site shall not be greater than permitted under the plan approved by the Employment and Training Administration.

Every trainee must be paid at not less than the rate specified in the approved program for the trainee's level of progress, expressed as a percentage of the journeyman hourly rate specified in the applicable wage determination. Trainees shall be paid fringe benefits in accordance with the provisions of the trainee program. If the trainee program does not mention fringe benefits, trainees shall be paid the full amount of fringe benefits listed on the wage determination unless the Administrator of the Wage and Hour Division determines that there is an apprenticeship program associated with the corresponding journeyman wage rate on the wage determination which provides for less than full fringe benefits for apprentices. Any employee listed on the payroll at a trainee rate who is not registered and participating in a training plan approved by the Employment and Training Administration shall be paid not less than the applicable wage rate on the wage determination for the classification of work actually performed. In addition, any trainee performing work on the job site in excess of the ratio permitted under the registered program shall be paid not less than the applicable wage rate on the wage determination for the work actually performed.

In the event the Employment and Training Administration withdraws approval of a training program, the contractor will no longer be permitted to utilize trainees at less than the applicable predetermined rate for the work performed until an acceptable program is approved.

c. Equal employment opportunity. The utilization of apprentices, trainees and journeymen under this part shall be in conformity with the equal employment opportunity requirements of Executive Order 11246, as amended, and 29 CFR part 30.

d. Apprentices and Trainees (programs of the U.S. DOT).

Apprentices and trainees working under apprenticeship and skill training programs which have been certified by the Secretary of Transportation as promoting EEO in connection with Federal-aid highway construction programs are not subject to the requirements of paragraph 4 of this Section IV. The straight time hourly wage rates for apprentices and trainees under such programs will be established by the particular programs. The ratio of apprentices and trainees to journeymen shall not be greater than permitted by the terms of the particular program.

5. Compliance with Copeland Act requirements. The contractor shall comply with the requirements of 29 CFR part 3, which are incorporated by reference in this contract.

6. Subcontracts. The contractor or subcontractor shall insert Form FHWA-1273 in any subcontracts and also require the subcontractors to include Form FHWA-1273 in any lower tier subcontracts. The prime contractor shall be responsible for the compliance by any subcontractor or lower tier subcontractor with all the contract clauses in 29 CFR 5.5.

7. Contract termination: debarment. A breach of the contract clauses in 29 CFR 5.5 may be grounds for termination of the contract, and for debarment as a contractor and a subcontractor as provided in 29 CFR 5.12.

8. Compliance with Davis-Bacon and Related Act requirements. All rulings and interpretations of the Davis-Bacon and Related Acts contained in 29 CFR parts 1, 3, and 5 are herein incorporated by reference in this contract.

9. Disputes concerning labor standards. Disputes arising out of the labor standards provisions of this contract shall not be subject to the general disputes clause of this contract. Such disputes shall be resolved in accordance with the procedures of the Department of Labor set forth in 29 CFR parts 5, 6, and 7. Disputes within the meaning of this clause include disputes between the contractor (or any of its subcontractors) and the contracting agency, the U.S. Department of Labor, or the employees or their representatives.

10. Certification of eligibility.

a. By entering into this contract, the contractor certifies that neither it (nor he or she) nor any person or firm who has an interest in the contractor's firm is a person or firm ineligible to be awarded Government contracts by virtue of section 3(a) of the Davis-Bacon Act or 29 CFR 5.12(a)(1).

b. No part of this contract shall be subcontracted to any person or firm ineligible for award of a Government contract by virtue of section 3(a) of the Davis-Bacon Act or 29 CFR 5.12(a)(1).

c. The penalty for making false statements is prescribed in the U.S. Criminal Code, 18 U.S.C. 1001.

V. CONTRACT WORK HOURS AND SAFETY STANDARDS ACT

The following clauses apply to any Federal-aid construction contract in an amount in excess of $100,000 and subject to the overtime provisions of the Contract Work Hours and Safety Standards Act. These clauses shall be inserted in addition to the clauses required by 29 CFR 5.5(a) or 29 CFR 4.6. As used in this paragraph, the terms laborers and mechanics include watchmen and guards.

1. Overtime requirements. No contractor or subcontractor contracting for any part of the contract work which may require or involve the employment of laborers or mechanics shall require or permit any such laborer or mechanic in any workweek in which he or she is employed on such work to work in excess of forty hours in such workweek unless such laborer or mechanic receives compensation at a rate not less than one and one-half times the basic rate of pay for all hours worked in excess of forty hours in such workweek.

2. Violation; liability for unpaid wages; liquidated damages. In the event of any violation of the clause set forth in paragraph (1.) of this section, the contractor and any subcontractor responsible therefor shall be liable for the unpaid wages. In addition, such contractor and subcontractor shall be liable to the United States (in the case of work done under contract for the District of Columbia or a territory, to such District or to such territory), for liquidated damages. Such liquidated damages shall be computed with respect to each individual laborer or mechanic, including watchmen and guards, employed in violation of the clause set forth in paragraph (1.) of this section, in the sum of $10 for each calendar day on which such individual was required or permitted to work in excess of the standard workweek of forty hours without payment of the overtime wages required by the clause set forth in paragraph (1.) of this section.

3. Withholding for unpaid wages and liquidated damages. The FHWA or the contacting agency shall upon its own action or upon written request of an authorized representative of the Department of Labor withhold or cause to be withheld, from any moneys payable on account of work performed by the contractor or subcontractor under any such contract or any other Federal contract with the same prime contractor, or any other federally-assisted contract subject to the Contract Work Hours and Safety Standards Act, which is held by the same prime contractor, such sums as may be determined to be necessary to satisfy any liabilities of such contractor or subcontractor for unpaid wages and liquidated damages as provided in the clause set forth in paragraph (2.) of this section.

4. Subcontracts. The contractor or subcontractor shall insert in any subcontracts the clauses set forth in paragraph (1.) through (4.) of this section and also a clause requiring the subcontractors to include these clauses in any lower tier subcontracts. The prime contractor shall be responsible for compliance by any subcontractor or lower tier subcontractor with the clauses set forth in paragraphs (1.) through (4.) of this section.

VI. SUBLETTING OR ASSIGNING THE CONTRACT

This provision is applicable to all Federal-aid construction contracts on the National Highway System.

1. The contractor shall perform with its own organization contract work amounting to not less than 30 percent (or a greater percentage if specified elsewhere in the contract) of the total original contract price, excluding any specialty items designated by the contracting agency. Specialty items may be performed by subcontract and the amount of any such specialty items performed may be deducted from the total original contract price before computing the amount of work required to be performed by the contractor's own organization (23 CFR 635.116).

a. The term "perform work with its own organization" refers to workers employed or leased by the prime contractor, and equipment owned or rented by the prime contractor, with or without operators. Such term does not include employees or equipment of a subcontractor or lower tier subcontractor, agents of the prime contractor, or any other assignees. The term may include payments for the costs of hiring leased employees from an employee leasing firm meeting all relevant Federal and State regulatory requirements. Leased employees may only be included in this term if the prime contractor meets all of the following conditions:

(1) the prime contractor maintains control over the supervision of the day-to-day activities of the leased employees;
(2) the prime contractor remains responsible for the quality of the work of the leased employees;
(3) the prime contractor retains all power to accept or exclude individual employees from work on the project; and
(4) the prime contractor remains ultimately responsible for the payment of predetermined minimum wages, the submission of payrolls, statements of compliance and all other Federal regulatory requirements.

b. "Specialty Items" shall be construed to be limited to work that requires highly specialized knowledge, abilities, or equipment not ordinarily available in the type of contracting organizations qualified and expected to bid or propose on the contract as a whole and in general are to be limited to minor components of the overall contract.

2. The contract amount upon which the requirements set forth in paragraph (1) of Section VI is computed includes the cost of material and manufactured products which are to be purchased or produced by the contractor under the contract provisions.

3. The contractor shall furnish (a) a competent superintendent or supervisor who is employed by the firm, has full authority to direct performance of the work in accordance with the contract requirements, and is in charge of all construction operations (regardless of who performs the work) and (b) such other of its own organizational resources (supervision, management, and engineering services) as the contracting officer determines is necessary to assure the performance of the contract.

4. No portion of the contract shall be sublet, assigned or otherwise disposed of except with the written consent of the contracting officer, or authorized representative, and such consent when given shall not be construed to relieve the contractor of any responsibility for the fulfillment of the contract. Written consent will be given only after the contracting agency has assured that each subcontract is evidenced in writing and that it contains all pertinent provisions and requirements of the prime contract.

5. The 30% self-performance requirement of paragraph (1) is not applicable to design-build contracts; however, contracting agencies may establish their own self-performance requirements.

VII. SAFETY: ACCIDENT PREVENTION

This provision is applicable to all Federal-aid construction contracts and to all related subcontracts.

1. In the performance of this contract the contractor shall comply with all applicable Federal, State, and local laws governing safety, health, and sanitation (23 CFR 635). The contractor shall provide all safeguards, safety devices and protective equipment and take any other needed actions as it determines, or as the contracting officer may determine, to be reasonably necessary to protect the life and health of employees on the job and the safety of the public and to protect property in connection with the performance of the work covered by the contract.

2. It is a condition of this contract, and shall be made a condition of each subcontract, which the contractor enters into pursuant to this contract, that the contractor and any subcontractor shall not permit any employee, in performance of the contract, to work in surroundings or under conditions which are unsanitary, hazardous or dangerous to his/her health or safety, as determined under construction safety and health standards (29 CFR 1926) promulgated by the Secretary of Labor, in accordance with Section 107 of the Contract Work Hours and Safety Standards Act (40 U.S.C. 3704).

3. Pursuant to 29 CFR 1926.3, it is a condition of this contract that the Secretary of Labor or authorized representative thereof, shall have right of entry to any site of contract performance to inspect or investigate the matter of compliance with the construction safety and health standards and to carry out the duties of the Secretary under Section 107 of the Contract Work Hours and Safety Standards Act (40 U.S.C.3704).

VIII. FALSE STATEMENTS CONCERNING HIGHWAY PROJECTS

This provision is applicable to all Federal-aid construction contracts and to all related subcontracts.

In order to assure high quality and durable construction in conformity with approved plans and specifications and a high degree of reliability on statements and representations made by engineers, contractors, suppliers, and workers on Federal-aid highway projects, it is essential that all persons concerned with the project perform their functions as carefully, thoroughly, and honestly as possible. Willful falsification, distortion, or misrepresentation with respect to any facts related to the project is a violation of Federal law. To prevent any misunderstanding regarding the seriousness of these and similar acts, Form FHWA-1022 shall be posted on each Federal-aid highway project (23 CFR 635) in one or more places where it is readily available to all persons concerned with the project:

18 U.S.C. 1020 reads as follows:

"Whoever, being an officer, agent, or employee of the United States, or of any State or Territory, or whoever, whether a person, association, firm, or corporation, knowingly makes any false statement, false representation, or false report as to the character, quality, quantity, or cost of the material used or to be used, or the quantity or quality of the work performed or to be performed, or the cost thereof in connection with the submission of plans, maps, specifications, contracts, or costs of construction on any highway or related project submitted for approval to the Secretary of Transportation; or

Whoever knowingly makes any false statement, false representation, false report or false claim with respect to the character, quality, quantity, or cost of any work performed or to be performed, or materials furnished or to be furnished, in connection with the construction of any highway or related project approved by the Secretary of Transportation; or

Whoever knowingly makes any false statement or false representation as to material fact in any statement, certificate, or report submitted pursuant to provisions of the Federal-aid Roads Act approved July 1, 1916, (39 Stat. 355), as amended and supplemented;

Shall be fined under this title or imprisoned not more than 5 years or both."

IX. IMPLEMENTATION OF CLEAN AIR ACT AND FEDERAL WATER POLLUTION CONTROL ACT

This provision is applicable to all Federal-aid construction contracts and to all related subcontracts.

By submission of this bid/proposal or the execution of this contract, or subcontract, as appropriate, the bidder, proposer, Federal-aid construction contractor, or subcontractor, as appropriate, will be deemed to have stipulated as follows:

1. That any person who is or will be utilized in the performance of this contract is not prohibited from receiving an award due to a violation of Section 508 of the Clean Water Act or Section 306 of the Clean Air Act.
2. That the contractor agrees to include or cause to be included the requirements of paragraph (1) of this Section X in every subcontract, and further agrees to take such action as the contracting agency may direct as a means of enforcing such requirements.

X. CERTIFICATION REGARDING DEBARMENT, SUSPENSION, INELIGIBILITY AND VOLUNTARY EXCLUSION

This provision is applicable to all Federal-aid construction contracts, design-build contracts, subcontracts, lower-tier subcontracts, purchase orders, lease agreements, consultant contracts or any other covered transaction requiring FHWA approval or that is estimated to cost $25,000 or more – as defined in 2 CFR Parts 180 and 1200.

1. **Instructions for Certification – First Tier Participants:**

a. By signing and submitting this proposal, the prospective first tier participant is providing the certification set out below.

b. The inability of a person to provide the certification set out below will not necessarily result in denial of participation in this covered transaction. The prospective first tier participant shall submit an explanation of why it cannot provide the certification set out below. The certification or explanation will be considered in connection with the department or agency's determination whether to enter into this transaction. However, failure of the prospective first tier participant to furnish a certification or an explanation shall disqualify such a person from participation in this transaction.

c. The certification in this clause is a material representation of fact upon which reliance was placed when the contracting agency determined to enter into this transaction. If it is later determined that the prospective participant knowingly rendered an erroneous certification, in addition to other remedies available to the Federal Government, the contracting agency may terminate this transaction for cause of default.

d. The prospective first tier participant shall provide immediate written notice to the contracting agency to whom this proposal is submitted if any time the prospective first tier participant learns that its certification was erroneous when submitted or has become erroneous by reason of changed circumstances.

e. The terms "covered transaction," "debarred," "suspended," "ineligible," "participant," "person," "principal," and "voluntarily excluded," as used in this clause, are defined in 2 CFR Parts 180 and 1200. "First Tier Covered Transactions" refers to any covered transaction between a grantee or subgrantee of Federal funds and a participant (such as the prime or general contract). "Lower Tier Covered Transactions" refers to any covered transaction under a First Tier Covered Transaction (such as subcontracts). "First Tier Participant" refers to the participant who has entered into a covered transaction with a grantee or subgrantee of Federal funds (such as the prime or general contractor). "Lower Tier Participant" refers any participant who has entered into a covered transaction with a First Tier Participant or other Lower Tier Participants (such as subcontractors and suppliers).

f. The prospective first tier participant agrees by submitting this proposal that, should the proposed covered transaction be entered into, it shall not knowingly enter into any lower tier covered transaction with a person who is debarred, suspended, declared ineligible, or voluntarily excluded from participation in this covered transaction, unless authorized by the department or agency entering into this transaction.

g. The prospective first tier participant further agrees by submitting this proposal that it will include the clause titled "Certification Regarding Debarment, Suspension, Ineligibility and Voluntary Exclusion-Lower Tier Covered Transactions," provided by the department or contracting agency, entering into this covered transaction, without modification, in all lower tier covered transactions and in all solicitations for lower tier covered transactions exceeding the $25,000 threshold.

h. A participant in a covered transaction may rely upon a certification of a prospective participant in a lower tier covered transaction that is not debarred, suspended, ineligible, or voluntarily excluded from the covered transaction, unless it knows that the certification is erroneous. A participant is responsible for ensuring that its principals are not suspended, debarred, or otherwise ineligible to participate in covered transactions. To verify the eligibility of its principals, as well as the eligibility of any lower tier prospective participants, each participant may, but is not required to, check the Excluded Parties List System website (https://www.epls.gov/), which is compiled by the General Services Administration.

i. Nothing contained in the foregoing shall be construed to require the establishment of a system of records in order to render in good faith the certification required by this clause. The knowledge and information of the prospective participant is not required to exceed that which is normally possessed by a prudent person in the ordinary course of business dealings.

j. Except for transactions authorized under paragraph (f) of these instructions, if a participant in a covered transaction knowingly enters into a lower tier covered transaction with a person who is suspended, debarred, ineligible, or voluntarily excluded from participation in this transaction, in addition to other remedies available to the Federal Government, the department or agency may terminate this transaction for cause or default.

* * * * *

2. Certification Regarding Debarment, Suspension, Ineligibility and Voluntary Exclusion – First Tier Participants:

a. The prospective first tier participant certifies to the best of its knowledge and belief, that it and its principals:

(1) Are not presently debarred, suspended, proposed for debarment, declared ineligible, or voluntarily excluded from participating in covered transactions by any Federal department or agency;

(2) Have not within a three-year period preceding this proposal been convicted of or had a civil judgment rendered against them for commission of fraud or a criminal offense in connection with obtaining, attempting to obtain, or performing a public (Federal, State or local) transaction or contract under a public transaction; violation of Federal or State antitrust statutes or commission of embezzlement, theft, forgery, bribery, falsification or destruction of records, making false statements, or receiving stolen property;

(3) Are not presently indicted for or otherwise criminally or civilly charged by a governmental entity (Federal, State or local) with commission of any of the offenses enumerated in paragraph (a)(2) of this certification; and

(4) Have not within a three-year period preceding this application/proposal had one or more public transactions (Federal, State or local) terminated for cause or default.

b. Where the prospective participant is unable to certify to any of the statements in this certification, such prospective participant shall attach an explanation to this proposal.

2. **Instructions for Certification - Lower Tier Participants:**

(Applicable to all subcontracts, purchase orders and other lower tier transactions requiring prior FHWA approval or estimated to cost $25,000 or more - 2 CFR Parts 180 and 1200)

a. By signing and submitting this proposal, the prospective lower tier is providing the certification set out below.

b. The certification in this clause is a material representation of fact upon which reliance was placed when this transaction was entered into. If it is later determined that the prospective lower tier participant knowingly rendered an erroneous certification, in addition to other remedies available to the Federal Government, the department, or agency with which this transaction originated may pursue available remedies, including suspension and/or debarment.

c. The prospective lower tier participant shall provide immediate written notice to the person to which this proposal is submitted if at any time the prospective lower tier participant learns that its certification was erroneous by reason of changed circumstances.

d. The terms "covered transaction," "debarred," "suspended," "ineligible," "participant," "person," "principal," and "voluntarily excluded," as used in this clause, are defined in 2 CFR Parts 180 and 1200. You may contact the person to which this proposal is submitted for assistance in obtaining a copy of those regulations. "First Tier Covered Transactions" refers to any covered transaction between a grantee or subgrantee of Federal funds and a participant (such as the prime or general contract). "Lower Tier Covered Transactions" refers to any covered transaction under a First Tier Covered Transaction (such as subcontracts). "First Tier Participant" refers to the participant who has entered into a covered transaction with a grantee or subgrantee of Federal funds (such as the prime or general contractor). "Lower Tier Participant" refers any participant who has entered into a covered transaction with a First Tier Participant or other Lower Tier Participants (such as subcontractors and suppliers).

e. The prospective lower tier participant agrees by submitting this proposal that, should the proposed covered transaction be entered into, it shall not knowingly enter into any lower tier covered transaction with a person who is debarred, suspended, declared ineligible, or voluntarily excluded from participation in this covered transaction, unless authorized by the department or agency with which this transaction originated.

f. The prospective lower tier participant further agrees by submitting this proposal that it will include this clause titled "Certification Regarding Debarment, Suspension, Ineligibility and Voluntary Exclusion-Lower Tier Covered Transaction," without modification, in all lower tier covered transactions and in all solicitations for lower tier covered transactions exceeding the $25,000 threshold.

g. A participant in a covered transaction may rely upon a certification of a prospective participant in a lower tier covered transaction that is not debarred, suspended, ineligible, or voluntarily excluded from the covered transaction, unless it knows that the certification is erroneous. A participant is responsible for ensuring that its principals are not suspended, debarred, or otherwise ineligible to participate in covered transactions. To verify the eligibility of its principals, as well as the eligibility of any lower tier prospective participants, each participant may, but is not required to, check the Excluded Parties List System website (https://www.epls.gov/), which is compiled by the General Services Administration.

h. Nothing contained in the foregoing shall be construed to require establishment of a system of records in order to render in good faith the certification required by this clause. The knowledge and information of participant is not required to exceed that which is normally possessed by a prudent person in the ordinary course of business dealings.

i. Except for transactions authorized under paragraph e of these instructions, if a participant in a covered transaction knowingly enters into a lower tier covered transaction with a person who is suspended, debarred, ineligible, or voluntarily excluded from participation in this transaction, in addition to other remedies available to the Federal Government, the

department or agency with which this transaction originated may pursue available remedies, including suspension and/or debarment.

* * * * *

Certification Regarding Debarment, Suspension, Ineligibility and Voluntary Exclusion--Lower Tier Participants:

1. The prospective lower tier participant certifies, by submission of this proposal, that neither it nor its principals is presently debarred, suspended, proposed for debarment, declared ineligible, or voluntarily excluded from participating in covered transactions by any Federal department or agency.

2. Where the prospective lower tier participant is unable to certify to any of the statements in this certification, such prospective participant shall attach an explanation to this proposal.

* * * * *

XI. CERTIFICATION REGARDING USE OF CONTRACT FUNDS FOR LOBBYING

This provision is applicable to all Federal-aid construction contracts and to all related subcontracts which exceed $100,000 (49 CFR 20).

1. The prospective participant certifies, by signing and submitting this bid or proposal, to the best of his or her knowledge and belief, that:

a. No Federal appropriated funds have been paid or will be paid, by or on behalf of the undersigned, to any person for influencing or attempting to influence an officer or employee of any Federal agency, a Member of Congress, an officer or employee of Congress, or an employee of a Member of Congress in connection with the awarding of any Federal contract, the making of any Federal grant, the making of any Federal loan, the entering into of any cooperative agreement, and the extension, continuation, renewal, amendment, or modification of any Federal contract, grant, loan, or cooperative agreement.

b. If any funds other than Federal appropriated funds have been paid or will be paid to any person for influencing or attempting to influence an officer or employee of any Federal agency, a Member of Congress, an officer or employee of Congress, or an employee of a Member of Congress in connection with this Federal contract, grant, loan, or cooperative agreement, the undersigned shall complete and submit Standard Form-LLL, "Disclosure Form to Report Lobbying," in accordance with its instructions.

2. This certification is a material representation of fact upon which reliance was placed when this transaction was made or entered into. Submission of this certification is a prerequisite for making or entering into this transaction imposed by 31 U.S.C. 1352. Any person who fails to file the required certification shall be subject to a civil penalty of not less than $10,000 and not more than $100,000 for each such failure.

3. The prospective participant also agrees by submitting its bid or proposal that the participant shall require that the language of this certification be included in all lower tier subcontracts, which exceed $100,000 and that all such recipients shall certify and disclose accordingly.

ATTACHMENT A - EMPLOYMENT AND MATERIALS PREFERENCE FOR APPALACHIAN DEVELOPMENT HIGHWAY SYSTEM OR APPALACHIAN LOCAL ACCESS ROAD CONTRACTS

This provision is applicable to all Federal-aid projects funded under the Appalachian Regional Development Act of 1965.

1. During the performance of this contract, the contractor undertaking to do work which is, or reasonably may be, done as on-site work, shall give preference to qualified persons who regularly reside in the labor area as designated by the DOL wherein the contract work is situated, or the subregion, or the Appalachian counties of the State wherein the contract work is situated, except:

a. To the extent that qualified persons regularly residing in the area are not available.

b. For the reasonable needs of the contractor to employ supervisory or specially experienced personnel necessary to assure an efficient execution of the contract work.

c. For the obligation of the contractor to offer employment to present or former employees as the result of a lawful collective bargaining contract, provided that the number of nonresident persons employed under this subparagraph (1c) shall not exceed 20 percent of the total number of employees employed by the contractor on the contract work, except as provided in subparagraph (4) below.

2. The contractor shall place a job order with the State Employment Service indicating (a) the classifications of the laborers, mechanics and other employees required to perform the contract work, (b) the number of employees required in each classification, (c) the date on which the participant estimates such employees will be required, and (d) any other pertinent information required by the State Employment Service to complete the job order form. The job order may be placed with the State Employment Service in writing or by telephone. If during the course of the contract work, the information submitted by the contractor in the original job order is substantially modified, the participant shall promptly notify the State Employment Service.

3. The contractor shall give full consideration to all qualified job applicants referred to him by the State Employment Service. The contractor is not required to grant employment to any job applicants who, in his opinion, are not qualified to perform the classification of work required.

4. If, within one week following the placing of a job order by the contractor with the State Employment Service, the State Employment Service is unable to refer any qualified job applicants to the contractor, or less than the number requested, the State Employment Service will forward a certificate to the contractor indicating the unavailability of applicants. Such certificate shall be made a part of the contractor's permanent project records. Upon receipt of this certificate, the contractor may employ persons who do not normally reside in the labor area to fill positions covered by the certificate, notwithstanding the provisions of subparagraph (1c) above.

5. The provisions of 23 CFR 633.207(e) allow the contracting agency to provide a contractual preference for the use of mineral resource materials native to the Appalachian region.

6. The contractor shall include the provisions of Sections 1 through 4 of this Attachment A in every subcontract for work which is, or reasonably may be, done as on-site work.

ATTACHMENT "F"

BUY AMERICA REQUIREMENTS

Source of Supply – Steel and Iron (Federal Aid Contracts Only): For Federal-aid contracts, the Contractor will only use steel and iron produced in the United States, in accordance with the buy America provisions of 23 CFR 635.410. Contractor will ensure that all manufacturing processes for these materials occur in the United States. A manufacturing process is any process that modifies the chemical content, physical shape, size or final finish of a product, beginning with the initial melding and mixing and continuing through the bending and coating stages. A manufactured steel or iron product is complete only when all grinding, drilling, welding, finishing and coating have been completed. If a domestic product is taken outside the United States for any process, it becomes foreign source material. When using steel and iron as a component of any manufactured product incorporated into the project (*e.g.*, concrete pipe, pre-stressed beams, corrugated steel pipe, etc.), these same provisions apply, except that the manufacturer may use minimal quantities of foreign steel and iron when the cost of such foreign materials does not exceed 0.1% of the compensation or $2,500, whichever is greater. These requirements are applicable to all steel and iron materials incorporated into the finished work, but are not applicable to steel and iron items that the Contractor uses but does not incorporate into the finished work. The Contractor shall provide a certification from the producer of steel or iron, or any product containing steel or iron as a component, stating that all steel or iron furnished or incorporated into the finished product was manufactured in the United States in accordance with the requirements of this provision. Such certification shall also include: (1) a statement that the product was produced entirely within the United States, or (2) a statement that the product was produced with the United States except for minimal quantities of foreign steel and iron and specify the actual value of the product. Each such certification shall be furnished to the AUTHORITY prior to incorporating the material into the project. When FHWA allows the use of foreign steel on a project, Contractor shall furnish invoices to document the costs of such material, and obtain the AUTHORITY'S written approval prior to incorporating the material into the project.

ATTACHMENT "G"

PERFORMANCE AND PAYMENT BOND

BY THIS BOND, WE, _____, Inc., as Principal and _____ a Corporation, as Surety, are bound to the Solid Waste Authority of Palm Beach County, hereinafter referred to as "Authority", in the sum of _____ **Dollars (up to $10,000,000),** for payment of which we bind ourselves, our heirs, personal representatives, successors, and assigns, jointly and severally.

THE CONDITION OF THIS BOND is that if Principal:

1. Performs the Agreement dated _____, 20____ between Principal and Authority for Proposal of Hurricane/Disaster Debris Removal, Reduction and Disposal, **Agreement No. 22-201,** the Agreement being made a part of this bond by reference, in the time and in the manner prescribed in the Agreement, and;

2. Promptly makes payment to all claimants, as defined in Section 255.05(1), Florida Statutes, supplying Principal with labor, materials and supplies, used directly or indirectly by Principal in the prosecution of the work provided for in the Agreement, and;

3. Pays Authority all loss, damages, expenses, costs, and attorney's fees, including appellate proceedings, that Authority sustains because of a default by Principal under the Agreement, and;

4. Performs the guarantee of all work and materials furnished under the Agreement for the time specified in the Agreement, and;

5. At completion of all work covered by Agreement and Final Payment by Authority to Principal then Principal will replace this Performance and Payment Bond with a Proposal Bond, in the amount of 5% of this Performance and Payment Bond, to be held by the Authority as a guarantee that Principal will provide to the Authority a Performance and Payment Bond in the amount of up to $10,000,000 on the occasion of a subsequent Task Order in accordance with the above referenced Agreement;

then this bond is void; otherwise it remains in full force.

Surety shall be responsible for any and all liquidated damages imposed by the Authority for the referenced Agreement.

Any changes in or under the Agreement Documents and compliance or noncompliance with any formalities connected with the Agreement or the changes does not affect Surety's obligation under this bond. Any increase in the total Agreement amount as authorized by the Authority shall accordingly increase the Surety's obligation by the same dollar amount of said increase. CONTRACTOR shall be responsible for notification to Surety of all such changes.

See subsection (2) of Section 255.05, Florida Statutes as amended for the notice and time limitations for claimants.

Signed and sealed this ____ day of _____, 20____.

PRINCIPAL:_____

By: _____
Signature

WITNESS:

Name: _____

1. _____

Title: _____

2. _____

Address: _____

_____

Telephone: _____

SURETY: _____

By: _____
Signature

WITNESS:

Name: _____

1. _____

Title: _____

2. _____

Address: _____

_____

Telephone: _____

NOTE: Date of Bond must not be prior to date of Agreement. If CONTRACTOR is a Partnership, all partners must execute bond.

IMPORTANT: Surety companies executing bonds **must** appear and remain on the Treasury Department's most current list (Circular 570 as amended) during construction, guarantee and warranty periods, and be authorized to transact business in the State of Florida, and be pre-approved by the Authority.

YOUR PARTNER FOR
SOLID WASTE SOLUTIONS

REQUEST FOR PROPOSAL

FOR

HURRICANE/DISASTER DEBRIS REMOVAL, REDUCTION AND DISPOSAL

RFP NO. 22-201/DL

JANUARY 2022

SOLID WASTE AUTHORITY OF PALM BEACH COUNTY
7501 NORTH JOG ROAD
WEST PALM BEACH, FLORIDA 33412
(561) 640-4000

TABLE OF CONTENTS

PART I

GENERAL INFORMATION

1. Purpose....1
2. Pre-Proposal Conference....1
3. Background....1
4. Evaluation Process....1
5. Procurement Schedule....2
6. Proposal Submission and Withdrawal....2
7. Communication Protocol....2
8. Addenda....2
9. Rights of the Authority....3
10. Proposal Preparation Costs....3
11. Bond Requirements....4
12. Interpretations....4
13. Non-Collusion Affidavit....4
14. Public Entity Crimes....4
15. Public Records Act / Information Disclosure to Third Parties....4
16. Posting of Recommendation for Award....5
17. Insurance....5
18. Cone of Silence....5
19. Agreements with other Governmental Entities....7
20. Scrutinized Companies....7
21. Inspector General....7
22. Commercial Non-Discrimination Policy....8
23. Third Party Beneficiary Disclaimer....9
24. E-Verify – Employment Eligibility....9
25. Equal Business Opportunity Program....9

PART II

STATEMENT OF WORK

2.1. Project Description and Requirements....10
2.2. Introduction....10
2.3. Planning Standard for Debris Removal and Disposal....11
2.4. Debris Management....11
2.5 Scope of Work/Overview....13
2.6 Debris Removal and Disposal Operations....15
2.7 Temporary Debris Management Sites (TDMS) Operations....21
2.8. Processing, Loading and Hauling Material....24
2.9 Miscellaneous Requirements....24
2.10 Performance of Contractor....26

PART III

PROPOSAL SUBMISSION REQUIREMENTS

3.1. Proposal Submission Requirements and Format....27
3.2. Content....27

PART IV

PROPOSAL EVALUATION AND AWARD

4.1. General 31
4.2. Evaluation Criteria 31
4.3. Evaluation Method 31
4.4. Award 33

PART V

PROPOSAL FORMS

1. Proposal Form 1 – Transmittal Letter 34
2. Proposal Form 2 – Proposal Bond 37
3. Proposal Form 3 – Price Proposal 39
4. Proposal Form 4 – Non-Collusion Affidavit 42
5. Proposal Form 5 – Drug-Free Workplace 43
6. Proposal Form 6 – PROPOSER'S Qualification Statement 44
7. Proposal Form 7 – Scrutinized Certification List 49

PART VI

ATTACHMENTS

Attachment A – Sample Contract Agreement
Attachment B – Task Order Disaster Debris Management
Attachment C – Pre-Approved Temporary Debris Management Sites Map
Attachment D – Public Assistance Program and Policy Guide
Attachment E – Mobilization Schedule
Attachment F – FHWA Form 1273
Attachment G – Buy America Requirements
Attachment H – Performance and Payment Bond

PART I
GENERAL INFORMATION

1. PURPOSE:

A. The purpose of this Request for Proposal (RFP) is to solicit formal written Proposals from experienced and qualified individuals, corporations, partnerships and other legal entities (PROPOSER) to perform Hurricane/Disaster Debris Removal, Reduction, and Disposal Services for the Solid Waste Authority of Palm Beach County (AUTHORITY). The AUTHORITY envisions the need for four (4) CONTRACTORS to carry out the debris removal and disposal work throughout Palm Beach County.

B. The contract will be for an initial three (3) year term with the option for an additional three (3) year renewal upon review and approval by the AUTHORITY.

2. PRE-PROPOSAL CONFERENCE:

A. A Virtual Mandatory Pre-Proposal Conference will be held on **WEDNESDAY, FEBRUARY 2, 2022, at 10:00am,** open to all interested parties at which time the AUTHORITY staff shall be present to answer questions and explain the intent of the RFP documents.

B. Any conclusions reached at this conference which amend the RFP documents, will be issued in the form of a written Addendum.

3. BACKGROUND:

A. The AUTHORITY is a Dependent Special District created by the Florida State Legislature pursuant to Chapter 2001-331, laws of Florida, known as the Palm Beach County Solid Waste Act. The AUTHORITY is governed by the seven (7) elected County Commissioners of Palm Beach County, Florida. The governing board members are elected for terms as determined by the Solid Waste Act.

B. The AUTHORITY is the governmental agency responsible for providing an economical and environmentally conscious integrated Solid Waste Management System for Palm Beach County, Florida. With approximately 400 employees, the AUTHORITY provides solid waste disposal and recycling services and programs to the County's 1.5 million residents and businesses. The AUTHORITY also provides solid waste and recycling collection services to the residents and businesses in unincorporated Palm Beach County through private haulers under exclusive franchise agreements.

C. The AUTHORITY has built an award-winning integrated system of facilities that combines recycling, renewable energy and landfilling to effectively manage the county's waste. The AUTHORITY's system includes two waste-to-energy facilities, landfills, a recovered materials processing facility, a biosolids processing facility, seven (7) home chemical collection facilities and a network of six (6) transfer stations.

4. EVALUATION PROCESS:

The evaluation process will be conducted by the Evaluation Committee in accordance with, but not limited to, the methods and criteria described in *Part IV – Proposal Evaluation and Award*.

5. PROCUREMENT SCHEDULE:

A summary schedule of the major activities associated with the AUTHORITY'S procurement process for this Project is presented in *Table 1 – Procurement Schedule*. The AUTHORITY, at its sole and unfettered discretion, may modify the schedule as it deems appropriate. The AUTHORITY will notify of any changes in association with submittal dates by written Addenda in accordance with *Part I, Section 8 – Addenda*.

Table 1 - Procurement Schedule

NO.	ACTIVITY	DATE
1	Issue RFP	January 14, 2022
2	Mandatory Pre-Proposal Meeting	February 2, 2022
3	Last Date for Authority to Receive Questions on RFP	February 7, 2022
4	Last Date for Authority to Issue Addendum in Response to Questions	February 9, 2022
5	Proposal Submission Due Date	February 18, 2022
6	Evaluation Committee Meeting, *tentative date*	February 28, 2022

6. PROPOSAL SUBMISSION and WITHDRAWAL:

A. The AUTHORITY uses to the Negometrix e-Procurement system, a 100% digital method of accessing and responding to solicitations (Negometrix). Therefore, PROPOSERS must submit their proposal via Negometrix. The AUTHORITY must receive all Proposals **no later than 2:00 P.M.,** Eastern Time, on the date established in *Part I, Section 5 – Procurement Schedule, of this RFP.*

B. The AUTHORITY cautions those submitting Proposals to ensure the accuracy of the document uploads to Negometrix.

C. The PROPOSER may withdraw their Proposal by notifying the AUTHORITY'S Purchasing Services office in writing at any time prior to the time set for the Proposals receipt deadline. PROPOSERS may withdraw their Proposals in person or through an authorized representative. Proposals, once opened, become the property of the AUTHORITY and will not be returned to the PROPOSERS.

7. COMMUNICATION PROTOCOL:

All questions and communications concerning this procurement process must be directed to Diane LeRay, CPPO, CPPB, Procurement Manager. All requests for clarifications or additional information **must be submitted in writing via electronic mail to dleray@swa.org or through Negometrix. All questions shall be submitted no later than the date specified in *Part 1, Section 5 – Procurement Schedule*** of this RFP. The AUTHORITY will record its responses to questions, if any, and address them in the form of a written Addendum to this RFP.

8. ADDENDA:

A. Should revisions to the RFP become necessary, the AUTHORITY will issue written Addenda. All Addenda must be acknowledged. This Acknowledgement must be included in Proposal Form 1 – Transmittal Letter. PROPOSER'S submittal may be rejected as non-responsive if PROPOSER has failed to submit Proposal without Addenda Acknowledgement. ***The AUTHORITY will issue all addenda through Negometrix.***

B. All PROPOSERS should contact the AUTHORITY no more than five (5) calendar days before the due date for submitting Proposals to ascertain whether any Addenda have been issued. Failure of the PROPOSER to

make this inquiry could result in its Proposal being non-responsive in the event addenda were issued and not acknowledged by the PROPOSER in their submittal.

C. No Addenda will be issued later than five (5) calendar days prior to the due date for receipt of Proposals except an Addendum withdrawing the RFP or one that includes postponement of the date for receipt of Proposals.

9. RIGHTS OF THE AUTHORITY:

This RFP constitutes an invitation for submission of Proposals to the AUTHORITY. This RFP does not obligate the AUTHORITY to procure or contract for any of the scopes of services set forth in this RFP. The AUTHORITY reserves and holds at its sole and unfettered discretion, various rights and options under Florida law, including without limitation, the following:

- To prepare and issue addenda to the RFP that may expand, restrict, or cancel any portion or all work described in the RFP without obligation to commence a new procurement process or issue a modified or amended RFP;
- To receive questions from potential PROPOSERS and to provide such answers in writing as it deems appropriate;
- To waive any informalities, technicalities or irregularities in the Proposals submitted;
- To reject any and all Proposal submissions;
- To change the date for receipt of Proposals or any deadlines and dates specified in the RFP;
- To change the procurement and/or selection process prior to receipt of Proposals;
- To conduct investigations with respect to the information provided by each PROPOSER and to request additional information (either in writing or in presentations and interviews) to support such PROPOSER'S responses and submittals;
- To visit facilities referenced in the PROPOSER'S submittal at any time or times during the procurement process;
- To seek clarification of Proposals from the PROPOSERS either in writing or in presentations and interviews, and;
- To cancel the RFP with or without the substitution of another RFP.

10. PROPOSAL PREPARATION COSTS:

The AUTHORITY accepts no liability for costs and expenses incurred by the PROPOSER in preparation and submission of Proposals and responses to clarifications from the AUTHORITY, potential site visits and interviews, negotiations, future RFP or any other work performed in connection with the Proposal. Each PROPOSER that enters into the procurement process shall prepare the required materials and submittals at its own expense and with the express understanding that they cannot make any claims whatsoever for reimbursement from the AUTHORITY for the costs and expenses associated with the process. PROPOSER should prepare their submittal providing a straightforward and concise description of the PROPOSER'S ability to meet the requirements of the RFP. Unnecessarily elaborate brochures, artwork, expensive paper, bindings, visual and other presentation materials, beyond that sufficient to present a complete and effective response to this RFP is not desired.

11. BOND REQUIREMENTS:

A. PROPOSER shall submit a completed Proposal Form 2 – Proposal Bond (same as a Bid Bond) in the amount of five hundred thousand dollars ($500,000). Unsuccessful PROPOSER'S Proposal Bond will be returned upon execution of an Agreement with the successful PROPOSER. **Proposal Form 2 – Proposal Bond shall also be accompanied by written Irrevocable Letter of Commitment** from an A- or better rated Surety Company licensed to do business in the State of Florida to provide a ten-million-dollar ($10,000,000) Performance and Payment Bond on the AUTHORITY'S form (Attachment H) upon issuance of first Task Order.

B. The AUTHORITY requires that the Proposal Bond of PROPOSER that is selected be in effect for the entire term of the Agreement and also that the Irrevocable Letter of Commitment to provide the Performance and Payment Bond also be in effect for the entire term of the Agreement until a debris generating event occurs and the successful PROPOSER is called to active duty. At the start of any and all active-duty periods the Proposal Bond will be returned to the successful PROPOSER(s) in exchange for the Performance and Payment Bond which will need to be in effect for the duration of the active duty period. Under no circumstances shall the successful PROPOSER start work until he/she has supplied an acceptable Performance and Payment Bond. If the successful PROPOSER fails to supply an acceptable Performance and Payment Bond, as specified in this RFP, the AUTHORITY shall be entitled to retain the Proposal Bond to rectify the PROPOSER'S unacceptable performance.

12. INTERPRETATIONS:

A. The AUTHORITY will not be bound by or responsible for any explanation or interpretation of the RFP documents other than those given in written addenda. In no event shall PROPOSERS rely on any oral statement by the AUTHORITY, its staff, agents, advisors, or consultants.

B. Any PROPOSER that submits in its Proposal to the AUTHORITY any information which is determined to be substantially inaccurate, misleading, exaggerated, or incorrect, may be disqualified from consideration.

13. NON – COLLUSION AFFIDAVIT:

The PROPOSER is required to submit Proposal Form 4 – Non-Collusion Affidavit stipulating Agreement to the following: "PROPOSER certifies that its Proposal is made without previous understanding, Agreement, or connection with any person, firm, or corporation making a Proposal for the same item(s) and is in all respects fair, without outside control, collusion, fraud, or otherwise illegal action".

14. PUBLIC ENTITY CRIMES:

Pursuant to Section 287.133(2)(a), as amended: A person or affiliate who has been placed on the convicted vendor list following a conviction for a public entity crime may not submit a bid on a contract to provide any goods or services to a public entity, may not submit a bid on a contract with a public entity for the construction or repair of a public building or public work, may not submit bids on leases of real property to a public entity, may not be awarded or perform work as a contractor, provider supplier, subcontractor, or consultant under a contract with any public entity, and may not transact business with any public entity in excess of the threshold amount provided in Section 287.017 for CATEGORY TWO for a period of thirty-six (36) months from the date of being placed on the convicted vendor list.

15. PUBLIC RECORDS ACT/INFORMATION DISCLOSURE TO THIRD PARTIES:

A. Sealed bids, proposals, SOQs, or replies received by the AUTHORITY pursuant to a competitive solicitation are exempt from s. 119.07(1) and s.24(a), Article I of the State Constitution until such time as the AUTHORITY provides notice of an intended decision or until thirty (30) days after opening the bids,

proposals, SOQs, or final replies, whichever is earlier. As such, the AUTHORITY shall not in any way be liable or responsible for the proper disclosure or result of the proper disclosure of any submissions or portions thereof submitted in response to the RFP.

B. The law provides for certain exemptions from disclosure. If the PROPOSER believes that some information contained in their Proposals is exempt from disclosure, the PROPOSER is instructed to label such information as specifying the exact section of the public records, or other Florida or Federal law that justifies nondisclosure, and request in writing the AUTHORITY keep such information confidential and free from disclosure. The AUTHORITY reserves the right to make any final determination of the applicability of the public records or other Florida or Federal law. Prior to releasing any information, the AUTHORITY will inform the PROPOSER and allow the PROPOSER to seek an injunction prohibiting the AUTHORITY from releasing the information. Each PROPOSER agrees that the AUTHORITY may reveal any confidential and exempt materials to designated AUTHORITY staff and Palm Beach County officials involved in the evaluation process, and to any outside consultant or third parties who serve on the Evaluation Committee or who are hired by the AUTHORITY to assist in the evaluation process.

C. Furthermore, each PROPOSER agrees to indemnify and hold harmless the AUTHORITY and each of their officers, employees, and agents from all costs, damages, and expenses incurred in connection with refusing to disclose any material, which the PROPOSER has designated as confidential and exempt.

D. Oral presentations, meetings where PROPOSER(S) is/are answering questions, negotiations, and AUTHORITY meetings to discuss negotiation strategy are exempt from public access in accordance with Sections 286.0113(2), Florida Statutes.

16. POSTING OF RECOMMENDATION FOR AWARD:

A. Recommendation for Award will be posted on the date of the Evaluation Committee meeting for a period of five (5) calendar days. Failure to file a protest to the Director of Purchasing Services within the time prescribed, as more fully detailed in the AUTHORITY'S Purchasing Manual, Section 10, shall constitute a waiver of protest proceedings.

B. It is the PROPOSER'S sole responsibility to ascertain the time and date of posting of the Recommendation for Award. This may be accomplished by telephone, fax, e-mail, or other means deemed timely by the PROPOSER.

C. It is understood by the PROPOSER that the Selection/Evaluation Committee makes only a recommendation which does not constitute the actual award itself. The actual award will be made by the SWA Board at a duly noticed public meeting.

D. Nothing contained in this Section shall limit or divest the SWA Board of its authority pursuant to its internal policies, AUTHORITY'S Purchasing Manual, the Special Act or general law.

17. INSURANCE:

The awarded PROPOSER(S) shall maintain insurance coverage reflecting the minimum amounts and conditions specified in the attached Sample Agreement, Attachment A. In the event the PROPOSER(S) is a governmental entity or a self-insured organization, different insurance requirements may apply. Misrepresentation of any material fact, whether intentional or not, regarding the PROPOSER(S) insurance coverage, policies or capabilities may be grounds for rejection of the proposal(s) and rescission of any ensuing agreement(s).

18. CONE OF SILENCE:

18.1 Cone of silence means a prohibition on any communication, written or oral, regarding a particular

request for proposal, request for qualification, bid, or any other competitive solicitation between:

(a) Any person, recognized legal entity, or either of their respective representative(s) seeking an award from such competitive solicitation; and
(b) any person who is a member of a selection or evaluation committee or panel whose purpose is to make selections, recommendations or evaluations in connection with a competitive selection process; and
(c) any employee of the department from which the contract solicitation originated and for whose primary purpose it will serve, any employee that is a Chief of the Solid Waste Authority of Palm Beach County regardless of the originating department; and
(d) Notwithstanding the above, any person, legal entity, or their respective representative(s), may contact any member(s) of the Authority's Governing Board, the Executive Director, Purchasing Director or Procurement Manager, however, any such communication shall only be by written correspondence, and in all cases the Purchasing Director shall be copied. Any oral communications to any of these persons(s) listed in this subsection regarding a particular competitive solicitation is strictly prohibited.

18.2 For the purposes of this section, a person or legal entity's representative shall include any person or group of persons acting on behalf of that person or legal entity, including but not limited to an employee, partner, officer, director, consultant, lobbyist, or any actual or potential subcontractor or consultant of the person or legal entity.

18.3 The Cone of Silence shall be in effect as of the deadline to submit the proposal, bid, or other response to a competitive solicitation. Each request for proposal, request for qualification, bid, or any other competitive solicitation shall provide notice of the Cone of Silence requirements and refer to this policy.

18.4 The Cone of Silence shall remain in effect for all person(s), legal entity, or their respective representative(s) submitting a response to a competitive solicitation until such time as the provisions of subsection 17.7 are satisfied, even if the person withdraws his/her submittal from the competitive process, or is otherwise eliminated from consideration consistent with the procedures of the competitive process.

18.5 The provisions of this policy shall not apply to oral communications at any proceeding, including pre-bid conferences, oral presentations before selection committees, contract negotiations during any meeting, presentations made to the board, and protest hearings. Further, the Cone of Silence shall not apply to contract negotiations between any employee and the intended awardees, or any dispute resolution process following the filing of a protest between the person filing the protest and any employee.

18.6 The Cone of Silence shall not apply to any purchase made in an amount less than the competitive bid threshold set forth in the Authority Purchasing manual.

18.7 The Cone of Silence shall terminate at the time the Board, or Authority staff, if authorized to act on behalf of the Board, awards or approves a contract, rejects all bids or responses, or otherwise takes action which ends the solicitation process.

18.8 The Board, by means of action taken at any properly noticed Governing Board meeting, may invoke the Cone of Silence earlier than the times specified in this section, for any procurement.

18.9 Any and all questions regarding the individuals who may or may not be covered under the Cone of Silence should be directed to the Purchasing Director or designee.

19. AGREEMENTS WITH OTHER GOVERNMENTAL ENTITIES:

All PROPOSERS submitting a response to this RFP agree that such response also constitutes a response to all State and local government agencies of the State of Florida under the same terms and conditions, for the same prices and for the same effective period as specified in this RFP, should the successful PROPOSER deem it in the best interest of their business to do so. The Agreement(s) resulting from this RFP in no way restricts or interferes with any State or local government agencies of the State of Florida from re-solicitation for any or all items specified in this RFP.

20. SCRUTINIZED COMPANIES:

A. As provided in F.S. 287.135, by entering into this Contract or performing any work in furtherance hereof, the CONTRACTOR certifies that it, its affiliates, suppliers, subcontractors and consultants who will perform hereunder, have not been placed on the Scrutinized Companies With Activities in Sudan List or Scrutinized Companies With Activities in The Iran Petroleum Energy Sector List created pursuant to F.S. 215.473, or is engaged in business operations in Cuba or Syria.

   If the AUTHORITY determines, using credible information available to the public, that a false certification has been submitted by CONTRACTOR, this Contract may be terminated and a civil penalty equal to the greater of $2 million or twice the amount of this Contract shall be imposed, pursuant to F.S. 287.135. Said certification may be requested at the time of Contract renewal.

B. As provided in F.S. 287.135, by entering into this Contract or performing any work in furtherance hereof, the CONTRACTOR certifies that it, its affiliates, suppliers, subcontractors and consultants who will perform hereunder, have not been placed on the Scrutinized Companies that Boycott Israel List, or is engaged in a boycott of Israel, pursuant to F.S. 215.4725.

   If the AUTHORITY determines, using credible information available to the public, that a false certification has been submitted by CONTRACTOR, this Contract may be terminated and a civil penalty equal to the greater of $2 million or twice the amount of this Contract shall be imposed, pursuant to F.S. 287.135. Said certification may be requested at the time of Contract renewal.

21. INSPECTOR GENERAL:

Palm Beach County has established the Office of the Inspector General (OIG), Ordinance No. 2009-049 which is authorized and empowered to review past, present and proposed county contracts, transactions, accounts and records. The AUTHORITY has entered into an Interlocal Agreement (ILA) for Inspector General Services. This Agreement provides for the Inspector General to provide services to the AUTHORITY in accordance with the authority, functions and powers set out in the Palm Beach County Office of Inspector General Ordinance. All parties doing business with the AUTHORITY and receiving AUTHORITY funds shall fully cooperate with the Inspector General including providing access to records relating to this Agreement. The Inspector General has the power to subpoena witnesses, administer oaths, require the production of records, and audit, investigate, monitor, and inspect the activities of the CONSULTANT, its officers, agents, employees, and lobbyists in order to ensure compliance with contract specifications and detect corruption and fraud. Failure to cooperate with the Inspector General or interference with or impeding any investigation shall be in violation of Ordinance 2009-049, and punished pursuant to Section 125.69, Florida Statutes, in the same manner as a second-degree misdemeanor.

22. COMMERCIAL NON-DISCRIMINATION POLICY:

A. Statement of Policy

It is the policy of the Authority not to enter into a contract or to be engaged in a business relationship with any business entity that has discriminated in the solicitation, selection, hiring or commercial treatment of vendors, suppliers, subcontractors or commercial customers on the basis of race, color, national origin, religion, ancestry, sex, age, marital status, familial status, sexual orientation, gender identity or expression, disability, or genetic information, or on the basis of any otherwise unlawful use of characteristics regarding the vendor's, supplier's or commercial customer's employees or owners; provided that nothing in this policy shall be construed to prohibit or limit otherwise lawful efforts to remedy the effects of discrimination that have occurred or are occurring in the relevant marketplace for Palm Beach County.

B. Policy Implementation

The EBO Office shall implement this policy by periodically conducting outreach and by distributing educational materials to the Authority's contracting and vendor community and related trade associations to advise such contractors, vendors and prospective respondents of this policy and the procedures to be followed in submitting complaints alleging violations of this policy. In addition, the Executive Director, the Office of the Chief Financial Officer, the Director of Purchasing, and the Office of the General Counsel shall ensure that the following commercial nondiscrimination clause language is set forth in, and incorporated into, all the Authority contracts that result from formal solicitations:

Every contract and subcontract shall contain a nondiscrimination clause that reads as follows:

"As a condition of entering into this agreement, the company represents and warrants that it will comply with the Authority's Commercial Nondiscrimination Policy as described under Section 6.3 of the Authority's Purchasing Manual. As part of such compliance, the company shall not discriminate on the basis of race, color, national origin, religion, ancestry, sex, age, marital status, familial status, sexual orientation, gender identity or expression, disability, or genetic information in the solicitation, selection, hiring or commercial treatment of subcontractors, vendors, suppliers, or commercial customers, nor shall the company retaliate against any person for reporting instances of such discrimination. The company understands and agrees that a material violation of this clause shall be considered a material breach of this agreement and may result in termination of this agreement, disqualification or debarment of the company from participating in Authority contracts, or other sanctions. This clause is not enforceable by or for the benefit of, and creates no obligation to, any third party."

All Formal Solicitations issued for Authority contracts shall include the following certification to be completed by the Respondent:

"The undersigned Respondent hereby certifies and agrees that the following information is correct:

In preparing its response on this project, the Respondent has considered all proposals submitted from qualified, potential Subcontractors and suppliers, and has not engaged in "discrimination" as defined in the Authority's Commercial Nondiscrimination Policy as set forth in Section 6.3 of its Purchasing Manual, to wit: discrimination in the solicitation, selection or commercial treatment of any Subcontractor, vendor, supplier or commercial customer on the basis of race, color, national origin, religion, ancestry, sex, age, marital status, familial status, sexual orientation, gender identity or expression, disability, or genetic information, or on the basis of any otherwise unlawful use of characteristics regarding the vendor's, supplier's or commercial customer's employees or owners; provided that nothing in this policy shall be construed to prohibit or limit otherwise lawful efforts to remedy the effects of discrimination that have occurred or are occurring in SWA's relevant marketplace. Without limiting the foregoing, "discrimination"

also includes retaliating against any person or other entity for reporting any incident of "discrimination." Without limiting any other provision of the solicitation for responses on this project, it is understood and agreed that, if this certification is false, such false certification will constitute grounds for the Authority to reject the response submitted by the Respondent on this project, and to terminate any contract awarded based on the response. As part of its response, the Respondent shall provide to the Authority a list of all instances within the immediate past four (4) years where there has been a final adjudicated determination in a legal or administrative proceeding in the State of Florida that the Respondent discriminated against its Subcontractors, vendors, suppliers or commercial customers, and a description of the status or resolution of that complaint, including any remedial action taken. As a condition of submitting a response to the Authority, the Respondent agrees to comply with the Authority's Commercial Nondiscrimination Policy as described under its Purchasing Manual – Economic Inclusion Policy and Procedures, Section 6.3.

23. THIRD PARTY BENEFICIARY DISCLAIMER:

It is not the intention of these RFP documents to create third party beneficiary status in any person or entity that is not a direct party to the contract awarded as a result of being the successful Proposer, and no language in these RFP documents or the contract awarded pursuant to this RFP should be construed or interpreted as creating a third-party beneficiary.

24. E-VERIFY – EMPLOYMENT ELIGIBILITY:

PROPOSER warrants and represents that it is in compliance with Section 448.095, Florida Statutes, as may be amended. No later than January 1, 2021, PROPOSER shall (1) register with and use the E-Verify System (E-Verify.gov) to electronically verify the employment eligibility of all newly hired workers; and (2) verify that all of the PROPOSER's contractors/consultants and subcontractors/subconsultants performing any duties and obligations under the resultant agreement are registered with and use the E-Verify System to electronically verify the employment eligibility of all newly hired workers. AUTHORITY shall terminate the resultant agreement if it has a good faith belief that the PROPOSER has knowingly violated Section 448.09(1), Florida Statutes as may be amended.

25. EQUAL BUSINESS OPPORTUNITY PROGRAM:

A. The Governing Board of the AUTHORITY has implemented the Economic Inclusion Policy and Procedures administered by the Equal Business Opportunity (EBO) Office to ensure that all segments of its business population, including, but not limited to small, local, minority, and women-owned businesses, have an equitable opportunity to participate in the AUTHORITY'S procurement process. Refer to Section 6.1 through 6.4 of the AUTHORITY's Purchasing Manual. The AUTHORITY's Purchasing Manual is available at https://swa.org/602/PURCHASING-MANUAL. It is the intention that the PROPOSER review and understand these provisions. In addition, program tools and solicitation incentives are hereby referred to as the Affirmative Procurement Initiatives (API).

B. Each solicitation will be evaluated to determine the appropriate API to be applied, if any. The API, if applicable, will be outlined in detail in Part III "Proposal Submission Requirements" located herein.

PART II
STATEMENT OF WORK

2.1. PROJECT DESCRIPTION AND REQUIREMENTS:

A. The AUTHORITY seeks experienced firms to remove and lawfully dispose of disaster-generated debris (other than hazardous materials and household putrescible garbage) from public property and public rights-of-way, and to setup and operate Temporary Debris Management Site(s) (TDMS) in Palm Beach County, Florida, immediately after a hurricane or other disaster.

B. The objective of this RFP and subsequent contracting activity is to secure the services of an experienced CONTRACTOR who is capable of efficiently removing large volumes of disaster-generated debris from a large area in a safe, timely and cost-effective manner and lawfully disposing of all debris. CONTRACTOR must be capable of assembling, directing, and managing a work force that can complete the debris management operations in 120 days or less. The duration of effort/completion dates of all tasks will be determined jointly by the AUTHORITY and CONTRACTOR. This determination will be set in writing in appropriate Task Order(s).

C. The CONTRACTOR shall perform all work in strict accordance with Federal Emergency Management Agency (FEMA) guidelines in order to maximize recovery of reimbursable expenses. This task shall include the provision of audit quality documentation as required by and acceptable to FEMA for all work accomplished.

D. The CONTRACTOR may be required, at the AUTHORITY'S discretion, to be under the direction of an agent of the AUTHORITY.

E. While intended to cover debris management needs in any major disaster scenario, the primary focus is on the threat of hurricane damage to Palm Beach County, Florida. The planning standards used for this project are based on the anticipated impacts of a named storm event or major flood impacting Palm Beach County, Florida. The AUTHORITY intends to enter into contingency Agreement(s) as further defined herein, to provide emergency debris removal and disposal services as required by the AUTHORITY.

2.2. INTRODUCTION:

A. The AUTHORITY'S disaster recovery planning includes considerations for removing and processing the volumes and types of debris expected to be generated by a major disaster such as a hurricane or major flood and includes procedures for disposing of that debris. The planning approach is formulated in part on the concept of strategic pre-positioning of plans and resources necessary for timely, safe, coordinated recovery operations, including removal of debris from public property and rights-of-way throughout Palm Beach County using a combination of county, municipal, and CONTRACTOR forces.

B. If activation is required, the AUTHORITY intends to activate contracts on an as-needed basis as solely determined by the AUTHORITY. The AUTHORITY intends to activate the CONTRACTORS in the order of final ranking as best meets the needs of the AUTHORITY. The AUTHORITY reserves the right in its sole and unfettered discretion, to assign/reassign any or all

CONTRACTORS at any time as may be deemed appropriate depending upon the circumstance(s), the event, or any other condition which may warrant such action.

C. The AUTHORITY envisions the need for four (4) CONTRACTORS to carry out the debris removal and disposal work throughout Palm Beach County. The CONTRACTOR must have the experience and capability to manage a major workforce with multiple subcontractors and to cover the expenses associated with a major recovery operation prior to the initial AUTHORITY payment and between subsequent payments, as well as the capacity to provide the necessary bonds and insurance. The CONTRACTOR must also have an established management team, an established network of resources to provide the necessary equipment and personnel, comprehensive debris removal, volume reduction operations plan, and demonstrable experience in major disaster recovery projects.

D. The Agreement(s) to be awarded under this RFP will be contingency Agreement(s) that will be activated only in the face of an emergency. As such, no compensation will accrue to the CONTRACTOR unless and until the Agreement is activated either in anticipation of a natural disaster or immediately after such disaster.

E. The CONTRACTOR who receives an Agreement for the work, will be required to participate in certain AUTHORITY directed disaster recovery training and/or exercises, 1 to 2 days each year, at no cost to the AUTHORITY.

F. The AUTHORITY does not guarantee a CONTRACTOR will be activated if awarded an Agreement.

2.3 PLANNING STANDARD FOR DEBRIS REMOVAL AND DISPOSAL:

The AUTHORITY'S goal is to complete the debris removal and disposal process in 120 days following the storm event. This assumes that the entire area of the county will be accessible within that period. Due to the low elevation and potential for flooding, some areas might not be accessible for several weeks after a major natural disaster. The CONTRACTOR must be aware that it might not be possible to initiate operations in all parts of the county simultaneously immediately after a storm.

2.4 DEBRIS MANAGEMENT:

A. Planning for debris management operations is a function of the AUTHORITY as a supporting agency to the Palm Beach County Department of Engineering and Public Works. The AUTHORITY'S Emergency Management Coordinator will direct the debris removal and disposal operations.

B. In addition to using AUTHORITY forces and equipment, the AUTHORITY intends to execute four (4) debris removal and disposal Agreements on a contingency basis for the purpose of having CONTRACTOR(S) immediately available and committed to assisting the AUTHORITY in the aftermath of a major disaster. Each CONTRACTOR holding a debris removal and disposal Agreement will serve as a General CONTRACTOR for the purpose of debris removal and disposal operations and will be able to use his/her own and subcontractor resources to meet the obligations of the Agreement. It is anticipated, but not required, that the CONTRACTOR will use both local and non-local subcontractors.

C. When a major disaster occurs or is imminent, the AUTHORITY intends to contact the highest two (2) or three (3) ranked CONTRACTORS holding debris removal and disposal Agreements to advise them of the AUTHORITY'S intent to activate the Agreement(s). Debris removal will generally be limited to debris in, upon, or brought to county residential private and public streets and roads, rights-of-way, municipal properties and facilities, and other public sites (this includes debris from customers assessed for residential solid waste and recycling collection services by the AUTHORITY). The CONTRACTOR will be responsible for determining the method and manner of debris removal and lawful disposal operations. Disposal of debris will be at AUTHORITY approved TDMS or landfill sites. The CONTRACTOR will be responsible for the lawful disposal of all debris and debris-reduction by-products generated at all TDMS.

D. When a major disaster occurs or is imminent, the AUTHORITY will initially send out an Alert to the selected CONTRACTOR(S). This Alert will serve to activate the lines of communication between the CONTRACTOR representatives and the AUTHORITY. Subsequently, the AUTHORITY will issue the first Task Order which will authorize the CONTRACTOR to send an Operations Manager to the AUTHORITY within 24 hours of receiving such Task Order, to begin planning for the operations and mobilizing the personnel and equipment as necessary to perform the stipulated work. This first Task Order will also direct the CONTRACTOR to execute the required Performance and Payment Bond. The CONTRACTOR should anticipate receiving this first Task Order 24 to 72 hours before projected landfall of a hurricane or major flood. Depending on the nature of the storm and circumstances, the AUTHORITY may activate more than one (1) CONTRACTOR. CONTRACTOR(S) will generally be activated in order of final ranking.

E. Specific task orders will be issued to select CONTRACTORS based on the best interest of Palm Beach County. The AUTHORITY reserves the right to assign work or task orders to various CONTRACTORS based on capability. The AUTHORITY does not guarantee a cradle to grave pricing arrangement but reserves the right to pick and choose CONTRACTORS based on ranking.

F. The general concept of debris removal operations includes multiple, scheduled passes of each site, location, or right-of-way. This will allow residents to return to their properties and bring debris to the private and public right-of-way as recovery progresses. The AUTHORITY will prescribe the specific schedule to be used after ascertaining the scope and nature of the disaster's impacts.

G. The AUTHORITY will make every effort to identify strategically located public and private TDMS throughout the county prior to a natural disaster. Depending upon the severity of the natural disaster, additional public and private TDMS will be identified as needed.

H. The CONTRACTOR will operate the public and private TDMS and only CONTRACTOR vehicles and others specifically authorized by the AUTHORITY will be allowed to use the sites. Only one (1) level of subcontractor will be allowed to operate the sites. There will be no multi-tiered subcontractors (sub of a sub) allowed to operate TDMS. The CONTRACTOR is responsible for all activity at TDMS operated by their subcontractor and must have an employee on site at all times to oversee daily operations. **The locations of both publicly and privately owned sites currently under consideration are shown on Attachment C.** Additional public and privately owned TDMS may become available as plans develop. The availability of both private and public TDMS may change during the term of the Agreement.

I. The AUTHORITY may also establish designated homeowner drop-off sites on a public right-a-way (PROW) for communities. The CONTRACTOR will be responsible for removing all eligible debris from those approved designated locations at the direction of the Emergency Management Coordinator or designee.

J. Curbside segregation of debris and disaster-generated or related wastes will be an element of the AUTHORITY'S disaster recovery program. The debris removal and disposal CONTRACTOR will be required to aid in the segregation and waste stream management processes. Any Household Hazardous Waste (HHW) encountered by the debris removal CONTRACTOR is to be set aside. HHW disposal will be the responsibility of the resident. The AUTHORITY will designate HHW drop-off locations.

K. The following items are considered HHW for the purpose of this Agreement:

1. Used Oil
2. Batteries
3. Paint
4. Aerosol spray cans
5. Pesticides
6. Antifreeze
7. Fluorescent light bulbs
8. Propane tanks (household size)

L. The CONTRACTOR will setup a lined containment area and separate any HHW inadvertently delivered to a TDMS.

M. Commercial and industrial hazardous waste such as chemicals, gas containers, transformers, and any other form of hazardous or toxic matter will be set aside for collection and disposal by a Hazardous Materials Removal and Disposal Contractor who will be selected by the AUTHORITY.

N. Putrescible residential garbage will be collected by AUTHORITY franchise waste haulers and is not to be collected or transported by CONTRACTOR forces. The AUTHORITY may enter into a separate emergency debris removal agreements with each franchise hauler to operate their dedicated self-loading collection equipment within their Service Area for FEMA eligible storm debris removal.

2.5 SCOPE OF WORK/OVERVIEW:

This section is divided into three (3) subsections:

2.5.1 Debris Removal and Disposal Operations from residential public and private streets, roads and rights-of-way and delivered to a TDMS designated by the Authority.

2.5.2 TDMS Operations which includes daily operations as well as reclamation of the site to its pre-storm condition or as directed by the AUTHORITY Emergency Management Coordinator

2.5.3 Processing, Loading and Hauling Material from TDMS to final destination.

A. Specific work authorizations by the AUTHORITY will be through written Task Orders. Task Orders will define the job to be accomplished, location of job, timeframe for completion, rates to be used, etc. Any job with requirements or rates not covered by this Proposal will be negotiated. The AUTHORITY reserves the right to extend operations on a weekly basis. Task Orders will be executed bilaterally. Performance will be by the metrics established in the Task Order(s). After 1/3 and again after 2/3 of the stipulated number of days of work in the Task Order have elapsed, the CONTRACTOR(S) shall provide written progress report to the AUTHORITY for review and acceptance. The AUTHORITY shall have the right to correct for CONTRACTOR'S default or underperformance by any means it deems in its best interest at the CONTRACTOR'S expense.

B. The CONTRACTOR shall commence mobilization immediately upon receipt of the mobilization Task Order meeting the following progress patterns: 48 hours- collection activity within assigned Collection Service Area. Within ten (10) calendar days CONTRACTOR shall have 100% of all necessary equipment operating within all Collection Service Areas. This represents a minimum response schedule and does not restrict an earlier response. Subsequently, the AUTHORITY may issue additional Task Orders to define more precisely the work to be accomplished or to authorize additional work. The CONTRACTOR shall perform in accordance with each Task Order in all designated Collection Service Areas established by the AUTHORITY. Each Task Order will be uniquely and sequentially numbered.

C. The CONTRACTOR is authorized to collect debris during daylight hours, seven (7) days per week. Any deviations from this schedule will require AUTHORITY approval.

D. The CONTRACTOR must be duly licensed to perform the work in accordance with the State of Florida statutory requirements. The CONTRACTOR shall obtain all permits necessary to complete the work. The CONTRACTOR shall be responsible for determining what permits are necessary to perform under the Agreement. Copies of all permits shall be submitted to the AUTHORITY's Director, Customer Information Services prior to issuance of the first Task Order.

E. The quantity of work required to complete the Agreement resulted from this RFP is estimated. The actual effort required may be more or less than the estimated amount shown in the Proposal Form 3 – Price Proposal. Payment will be made at the unit rates proposed. The output will be verified by the AUTHORITY's Director, Customer Services in the daily operational report. Should hourly rates be used to pay for certain equipment other than preventative maintenance, not in excess of fifteen (15) minutes in a normal workday, will be paid at the regular hourly rate. Preventative maintenance or down time resulting from equipment failure, routine maintenance and fueling that exceeds fifteen (15) minutes will be considered unacceptable work and non-payment of that time will be rounded off to the half hour of all hours where delays occur. Preventative maintenance is defined as the usual field maintenance to keep equipment in operating condition without the use of extensive shop equipment. Fueling of equipment will be considered as part of preventative maintenance.

F. The CONTRACTOR shall be responsible for correcting any notices of violations issued as a result of the CONTRACTOR'S or any subcontractor's actions or operations during the performance of this Agreement. Corrections for any such violations shall be at no additional cost to the AUTHORITY.

G. The CONTRACTOR shall conduct the work so as not to interfere with the disaster response and recovery activities of federal, state or local governments or agencies, or of any public utilities or other private contractor.

H. The CONTRACTOR shall provide contact information for all key personnel to the AUTHORITY that shall include name, phone number, cellular phone number and email address. The CONTRACTOR and its agents shall respond in a timely manner to all AUTHORITY inquiries at all times.

2.6 DEBRIS REMOVAL AND DISPOSAL OPERATIONS

2.6.1 General:

A. The purpose of this section is to define the requirements for debris removal and disposal operations after any catastrophic disaster within Palm Beach County. The AUTHORITY may designate zones for collection and disposal locations for debris collected. CONTRACTORS will be tasked with a service area(s) for this specific work immediately after the activation of the Agreement.

B. For work performed on a Time and Materials basis, all hourly equipment rates shall include the cost of the maintenance, fuel, repairs, overhead, profit, insurance, and all other costs associated with the equipment including labor and operator.

2.6.2 Services:

A. The CONTRACTOR shall provide equipment, operators, and laborers for debris removal operations. The CONTRACTOR shall provide all labor and materials necessary to fully operate and maintain (including fuel, oil, grease, and repairs) all equipment under this Agreement.

B. All rates are to include the cost of protective clothing (to include hardhats and steel-toed boots), fringe benefits, hand tools, supervision, transportation, lodging, meals, and all other costs.

C. The work shall consist of clearing and removing disaster generated debris as directed by the AUTHORITY Emergency Management Coordinator. CONTRACTOR shall provide collection equipment the day following a natural disaster or as directed by the AUTHORITY and shall provide equipment sufficient to collect a minimum of 50,000 cubic yards of debris per day within ten (10) calendar days of collection commencement (Past AUTHORITY natural disaster cleanup records show that ten (10) days' following disaster, 95,000-126,000 cubic yards of debris collected per day). Failure to provide sufficient equipment necessary to collect required amount may result in the AUTHORITY entering into a separate agreement with another contractor for collection services.

2.6.2.1 Removal of Hazardous Leaning Trees and Hanging Limbs

a) Under this contract, work shall consist of all labor, equipment, fuel, and miscellaneous costs necessary to remove all hazardous trees twelve inches (12") or greater in diameter, measured three feet (3') from the base of the tree or chest height and hanging limbs two inches (2") or greater in diameter existing in private and public right-of-way. Further, debris generated from the removal of hazardous trees and hanging limbs two inches (2") or greater existing in private and public right-of-way will be placed at the public right-of-way for removal as vegetative debris. Hazardous leaning trees less than twelve inches (12") in diameter, measured three feet (3') from the base of the tree or at chest height, will be flush cut, and placed on the public right-of-way to be removed as vegetative debris. The AUTHORITY will not compensate the CONTRACTOR for leaning trees less than twelve inches (12") in diameter on a unit rate basis.

b) Removal and transportation of hazardous trees twelve inches (12") or greater in diameter and hanging limbs two inches (2") or greater in diameter existing in private and public right-of-way will be performed as identified by the AUTHORITY. All disaster specific eligibility guidelines regarding size and diameter of leaning trees will be communicated to the CONTRACTOR, in writing, by the AUTHORITY. In order for leaning or hazardous trees to be removed and eligible for reimbursement, the tree must satisfy a minimum of one (1) of the following requirements:

   i) The tree is leaning in excess of 30° degrees in a direction that poses an immediate threat to public health, welfare, and safety.
   ii) The tree is dead, twisted, or mangled as a direct result of the storm and a certified arborist can attest to the fact that the tree will die and potentially create a falling hazard to the public.

2.6.2.2 Removal of Hazardous Stumps

a) Under this contract, work shall consist of all labor, equipment, fuel, and miscellaneous costs necessary to remove all hazardous uprooted stumps 24 inches or greater in diameter, measured 24 inches from the base of the tree existing in private and public right-of-way. Further, debris generated from the removal of uprooted stumps existing in private and public right-of-way will be placed at the public right-of-way for removal as vegetative debris. Stumps measured 24 inches from the base of the tree and less than 24 inches in diameter will be considered normal vegetative debris and removed in accordance with 3.1.2. The AUTHORITY will not compensate hazardous stumps less than 24 inches in diameter on a unit rate basis and instead will be considered normal vegetative debris. The diameter of stumps less than 24 inches will be converted into a cubic yardage volume based on the published FEMA stump conversion table (In accordance with current FEMA public assistance guidelines) and removed under the terms and conditions of 2.6.2.

b) Removal and transportation of hazardous uprooted stumps existing in the private and public right-of-way and private property will be performed as identified by the AUTHORITY. All disaster specific eligibility guidelines regarding size and diameter of hazardous stumps will be communicated to the CONTRACTOR, in writing, by the AUTHORITY. In order for hazardous stumps to be removed and eligible for reimbursement, the stump must satisfy the following requirement:

(i) Over 50% of the tree crown is damaged or broken and heartwood is exposed.
(ii) Tree stumps that are not attached to the ground will be considered normal vegetative debris and subject to removal under the terms and conditions of 2.1. The cubic yard volume of the unattached stump will be based off of the diameter conversion using the published FEMA stump conversion table (In accordance with current FEMA public assistance guidelines).

The AUTHORITY or its representative will measure and certify all stumps before removal.

2.6.2.3 Collection of Storm Generated Residential Vegetation and Construction and Demolition Debris:

a) It is the AUTHORITY'S goal to ensure that Vegetation and Construction/Demolition debris remain separate task orders for the collection of Vegetation and Construction loads. Mixing of loads by the CONTRACTOR at the road right of way will not be tolerated.

Work may include:

(i) First pass to clear debris from emergency evacuation routes, access roads to critical facilities and all primary roadways.
(ii) Clearing debris from residential private and public road right of ways.
(iii) Loading the debris.
(iv) Hauling the debris to an approved AUTHORITY TDMS or an authorized private construction demolition debris recycling facility or landfill.
(v) Dumping the debris at the TDMS or direct haul to an Authority permitted approved private Construction and Demolition Debris (C&D) recycling facility or Authority authorized landfill.

b) Debris delivered to a TDMS, private C&D recycling facility or authorized landfill will be paid based on the per cubic yard price according to the Proposal Form 3 – Price Proposal.

2.6.2.4 Hourly Rate Clearing:

a) From 0-70 hours following a disaster CONTRACTOR, as designated by the AUTHORITY, shall provide the clearing services on an hourly rate that shall include the following:

(i) Clear debris from emergency evacuation routes, access roads to critical facilities, and primary roadways.
(ii) Perform emergency removal of debris if needed for life-saving measures.
(iii) Conduct daily briefings with debris managers and other officials to update progress and discuss issues.
(iv) Develop a traffic control plan along potential haul routes and at debris management and disposal sites.

b) The CONTRACTOR shall not move from one designated Collection Zone to another area without prior approval from the AUTHORITY's Director, Customer Information Services or designee. CONTRACTORS and/or subcontractors that move to a designated Collection Service Area without prior AUTHORITY approval may be terminated immediately. The AUTHORITY reserves the right to relocate CONTRACTOR to other Collection Service Areas based on need and ability to perform required work at an acceptable level. The AUTHORITY reserves the right to immediately terminate CONTRACTOR and any subcontractor who fails to provide service in strict accordance with guidelines set forth by FEMA and the AUTHORITY.

c) The AUTHORITY or designee shall forward all claims of damage to the CONTRACTOR daily. CONTRACTOR shall provide all contact information, including name, phone number, cellular phone number, fax number and email address, for personnel responsible for resolving all claims of damage. CONTRACTOR must respond to all claims of damage within 24 hours and resolve within ten (10) calendar days. Mailboxes must be repaired or replaced within two (2) calendar days. CONTRACTOR is responsible for all damage caused by his crew and/or subcontractors in the performance of debris removal.

d) In the event the CONTRACTOR fails to repair damages as a result of the Contractor's equipment failure or negligence within the time provided in this Agreement, the AUTHORITY or designee may arrange for the repairs and assess the CONTRACTOR for the cost of the repairs and any applicable administrative charges. Any disputes as to damage responsibility will be presented to the Director, Customer Information Services or designee for review. The decision of the Director, Customer Information Services or designee will be final.

2.6.3 Equipment:

A. All trucks and equipment must be in compliance with all applicable federal, state, and local rules and regulations. Trucks used to haul debris must be capable of rapidly dumping their load without the assistance of other equipment, be equipped with a tailgate that will effectively contain the debris during transport that will permit the trucks

to be filled to capacity. Cyclone fence may be used as temporary tailgates if they comply with the following specifications:

1. Fencing must be permanently attached to one side of the truck bed.
2. After loading, the fencing must be tied to the other side of the truck bed at two places with heavy gauge wire.
3. Fencing must extend to the bottom of the bed.
4. After loading, bottom of fencing shall be tight against the bed of the truck and secured at a minimum of two locations.
5. Solid iron metal bars must be secured to both sides of the fencing.
6. There shall be no hand loaded equipment allowed.

B. The AUTHORITY or designee shall complete certifications indicating the type of vehicle, make and model, license plate number, equipment number, and measured maximum volume, in cubic yards, of the load bed of each piece of equipment utilized to haul debris. The measured volume of each piece of equipment shall be calculated from actual internal physical measurement performed and certified by the CONTRACTOR. Maximum volumes may be rounded up to the nearest cubic yard. The reported measured maximum volume of any load bed shall be the same as shown on the placards affixed to each piece of equipment. The AUTHORITY reserves the right to re-measure trucks and trailers at any time to verify reported capacity. If a truck and/or trailer are re-measured and the yardage capacity is determined to be lower, the lower yardage volume will be retroactive to the initial load and total volume adjusted accordingly.

C. All trucks and trailers utilized in hauling debris shall be equipped with a tailgate that will permit the vehicle to be loaded to capacity and effectively contain the debris on the vehicle while hauling. If installed, all sideboard extensions must remain in place throughout the operation, or the vehicle must be re-measured and remarked. All extensions to the bed are subject to acceptance or rejection at the sole discretion of the AUTHORITY or designee.

D. Trucks or equipment designated for use under this Agreement shall not be used for any other work during working hours. The CONTRACTOR shall not solicit work from private citizens or others to be performed in the designated Collection Service Area during the period of this Agreement. Under no circumstance will the CONTRACTOR mix debris hauled for others with debris hauled under this Agreement. Failure to comply will result in no payment to CONTRACTOR and the operator and vehicle will be declared ineligible to provide any additional emergency debris collection services. Any and all unapproved changes to placard will result in no payment to CONTRACTOR and the operator and vehicle will be declared ineligible to perform any additional emergency debris collection services.

2.6.4 Securing Debris

The CONTRACTOR shall be responsible for properly and adequately securing debris on each piece of equipment utilized to haul debris. Prior to leaving the loading site, the CONTRACTOR shall ensure that each load is secure and trimmed so that no debris extends horizontally beyond the bed of the equipment in any direction. All loose debris shall be reasonably compacted during loading and secured during transport. Tarps or other

coverings shall be provided by the CONTRACTOR to prevent materials from falling or being blown from the bed. Loads not properly tarped or otherwise covered will not be allowed to dispose at any AUTHORITY approved TDMS which may result in non-payment to CONTRACTOR.

2.6.5 Equipment Signage

Prior to commencing operations, the AUTHORITY or designee shall affix to each piece of equipment, signs or markings indicating the Owner Operator's name and a unique equipment identification number. One sign shall be placed on each side of the equipment. For those trucks, trailers and other equipment intended to haul debris, the maximum volume, in cubic yards, of the load bed shall also be shown. Each operator shall keep AUTHORITY certification with them at all times. Placards must remain on both sides of equipment.

2.6.6 Other Considerations

A. The CONTRACTOR shall assign and provide an Operations Manager (OM) to the AUTHORITY TDMS to serve as the principal liaison between the AUTHORITY Director, Customer Services or designee and the CONTRACTOR'S forces. The assigned OM must be knowledgeable of all facets of the CONTRACTOR'S operations and have authority in writing to commit the CONTRACTOR. The OM shall be on call 24 hours per day, seven (7) days per week and shall have electronic linkage capability for transmitting and receiving relevant contractual information and make arrangements for onsite accommodations. This linkage shall provide immediate contact via cell phone, Fax machine, and have Internet capabilities. The OM will participate in daily meetings and disaster exercises, functioning as a source to provide essential element information. The OM will report to the AUTHORITY Director, Customer Services or designee. This position will not require constant presence; rather the OM will be required to be physically capable of responding to the AUTHORITY Emergency Management Coordinator within 30 minutes of notification.

B. The CONTRACTOR shall be responsible for control of pedestrian and vehicular traffic in the work area. At a minimum, one flag person should be posted at each approach to the work area.

C. The CONTRACTOR shall supervise and direct the work, using skilled labor and proper equipment for all tasks. Safety of the CONTRACTOR'S personnel and equipment is the responsibility of the CONTRACTOR. Additionally, the CONTRACTOR shall pay for all materials, personnel, taxes, and fees necessary to perform under the terms of this contract.

D. Payment for debris hauled will be based on the quantity of debris hauled in cubic yards. Debris hauled to a TDMS will require a validated load ticket. Drivers will be given an electronic load tickets at the loading site by an AUTHORITY loading site monitor. The quantity of debris hauled will be estimated in cubic yards at the TDMS by an AUTHORITY TDMS monitor. The estimated quantity will be recorded on the electronic load ticket. The AUTHORITY TDMS monitor will retain one copy of the paper load ticket and the driver will retain the remaining copies of the load ticket. Debris being hauled to

a permanent landfill will be paid based on cubic yards recorded on an approved electronic or paper load ticket. Payment will be made against the CONTRACTOR'S invoice once site monitor and CONTRACTOR load tickets and/or scale tickets match. Load tickets not properly completed and signed will not be paid.

2.7 TEMPORARY DEBRIS MANAGEMENT SITES (TDMS) OPERATIONS

2.7.1 General

A. The purpose of this section is to define the requirements for TDMS Operations after any catastrophic disaster within Palm Beach County.

B. The CONTRACTOR shall use only TDMS designated by the AUTHORITY Emergency Management Coordinator.

C. The TDMS foreman shall direct all vehicular traffic and load drop-off operations. Different types of debris shall be kept in separate piles at the TDMS. At a minimum, one flag person shall be posted at each TDMS for traffic control and to direct unmixed loads to proper location (by debris type) to be offloaded. CONTRACTOR shall be responsible for sorting and proper placement of all loads not dumped in appropriate location which results in mixing the once separated debris at no charge to the AUTHORITY.

D. The CONTRACTOR shall begin grinding vegetative debris within five (5) calendar days of TDMS opening date and removing mulch/wood chips within ten (10) calendar days of site opening date. It is very important your plan provides specific information for the final disposal destination location of the mulch / wood chips removed from the public or private TDMS. The CONTRACTOR shall begin removal of Construction and Demolition/mixed debris from TDMS to an approved final destination within five (5) days of site opening date.

2.7.2 TDMS Services

2.7.2.1 Site Setup/Preparation and Site Closeout/Restoration Site setup/preparation and site closeout/restoration shall be compensated on a time and materials basis in accordance with the hourly rates provided in the Proposal Form 3 – Price Proposal Site set-up/preparation/closeout/restoration includes: clearing, stripping, hauling, fill placement, constructing/deconstructing processing pads, limerock or crushed concrete access roads, seeding, and any other similar activity necessary to make the site usable for its intended purposes and to return the site to its original condition. Do not include any materials in calculating the hourly rates in the Proposal Form 3 - Price Proposal. Important- Phase I TDMS Reclamation is included in the 2.0 cubic yard price. Phase I Reclamation requires the contractor to remove all debris from the TDMS including small particles mixed with soil and grading the entire area. The only site closeout cost will be removal of road base material and seeding as approved by the Authority.

2.7.2.2 TDMS Operations and Material Processing

a. TDMS operations and material processing shall be compensated in accordance with the unit prices provided in the Proposal Form 3 - Price Proposal. The CONTRACTOR shall provide equipment, operators, and laborers for TDMS operations as specified by Task Order. Unit prices provided in the Proposal Form 3 - Price Proposal, shall include all labor and materials necessary to fully operate and maintain (including fuel, oil, grease, repairs, operator, mobilization, demobilization, overhead, profit, lodging and insurance) all equipment under this Agreement. Each Inspection Tower shall be equipped with two (2) portable toilets. Toilets shall be provided immediately upon completion of tower assembly. CONTRACTOR shall provide a water truck for the purpose of applying to site surface to minimize dust. The AUTHORITY shall provide a front-load garbage container and collection service of the container at each TDMS. CONTRACTOR shall be responsible for cleaning up all trash and litter generated on the site from daily operations and depositing into the container for collection. The entrance roadway and surrounding area within ½ mile of the site's entrance shall be cleaned daily by the CONTRACTOR. All pre-storm identified sites shall be opened by the CONTRACTOR within three (3) calendar days after receiving approval from the AUTHORITY to operate the TDMS. Failure to open sites with proper equipment and necessary personnel will result in liquidated damages of $10,000 per day. All rates shall include the cost of protective clothing (to include hardhats and steel-toed boots), fringe benefits, hand tools, supervision, transportation, lodging, meals, and any other costs. The work shall consist of managing the operations of a TDMS and performing debris reduction by air curtain incineration and/or grinding of storm generated debris as directed by the AUTHORITY Emergency Management Coordinator

b. The AUTHORITY plans to use two types of TDMS.

    1. Vegetative TDMS will be devoted to the reduction of clean woody debris by either burning or grinding. The AUTHORITY expects the material to be recycled and or beneficially re-used if processed by grinding. It is important to provide a detailed plan on how this material will be recycled or beneficially reused after grinding / reduction.

    2. Depending upon the size and type of devastation the AUTHORITY may require a separate Construction & Demolition (C&D) staging area, mixed debris staging area and a separate Household Hazardous Waste staging area. The AUTHORITY requests that PROPOSER implements recycling and or reduction programs to minimize the quantity of construction debris material to be land filled.

c. Material coming into the Vegetative or C&D TDMS will be measured and paid for by the cubic yard according to the Proposal Form 3 – Price Proposal. Material removed and transported from a C&D TDMS will be measured and paid by the cubic yard according to the Proposal Form 3 – Price Proposal.

d. Locations of all TDMS will be approved by the AUTHORITY. The AUTHORITY Emergency Management Coordinator must approve site improvements before work begins and any costs, other than those in the Proposal Form 3 – Price Proposal, that might have been negotiated under a Task Order shall be documented for payment.

e. Material processed at a TDMS by either grinding or burning will be measured using cubic yards from incoming load tickets. Material entering a TDMS will be deposited in manageable piles.

2.7.3 Reporting

The CONTRACTOR shall submit a report to the AUTHORITY Emergency Management Coordinator or designee by close of business each day of the term of the Task Order. Each report shall contain, at a minimum, the following information:

1. Contractor's Name
2. Contract Number
3. Daily and cumulative hours for each piece of equipment, *if appropriate*
4. Daily and cumulative hours for personnel, by position, *if appropriate*
5. Volumes of debris handled

Failure to provide audit quality information by 5:00 p.m. of the following day of operation will subject CONTRACTOR to non-payment in each instance at the sole discretion of the AUTHORITY.

2.7.4 Other Considerations

A. The CONTRACTOR shall supervise and direct the work, using skilled labor and proper equipment for all tasks. Safety of the Contractor's personnel and equipment is the responsibility of the CONTRACTOR. Additionally, the CONTRACTOR shall pay for all materials, personnel, taxes, and fees necessary to perform under the terms of this contract.

B. The CONTRACTOR shall be responsible for control of pedestrian and vehicular traffic in the work area. In the event a TDMS must be closed due to CONTRACTOR equipment or operational failures, CONTRACTOR shall be liable for liquidated damages in the amount of $25,000.00 per day for every day the site has to remain closed.

2.7.5 Debris Clearance (for access) from Right-of-Ways and Public Property

A. The AUTHORITY provides support to Palm Beach County Government for Debris Management, including the clearance (moving debris from the middle of the road, etc.) of debris from right-of- ways and public property. Palm Beach County intends to perform debris clearance for access with its own forces or under existing contractual Agreements between the County and local firms. However, in a significant disaster, these resources may be insufficient to perform the clearance activities in a timely manner.

B. This debris clearance is to be considered supplemental and optional service. It is anticipated that debris clearance activities would be conducted, if needed, on a time and material basis using the rates in the Proposal Form 3 – Price Proposal.

2.8 PROCESSING, LOADING AND HAULING MATERIAL:

CONTRACTOR shall provide all necessary labor, material and equipment to process, load and haul wood chips from TDMS in Palm Beach County to final destination for disposal. CONTRACTOR shall provide all necessary labor, material and equipment to load and haul construction and demolition debris and/or mixed debris from TDMS as directed by the AUTHORITY. The AUTHORITY reserves the right to contract with other firms to process, load and haul wood chips and construction and/or mixed debris to a final destination as may best meet the needs of the AUTHORITY. All wood chips, construction and/or mixed debris shall be disposed of in accordance with all Local, State of Florida and Federal guidelines.

CONTRACTOR will provide detailed listing to the AUTHORITY of the following:

1. Quantity (loads and cubic yards)
2. Owner information
3. Site where mulch / reduced yard waste material generated at TDMS is disposed, to include address/GPS location.
4. AUTHORITY will determine final private or public Construction/Demolition debris disposal/recycling facility.

2.9 MISCELLANEOUS REQUIREMENTS

2.9.1 TDMS Foreman

A. The TDMS foreman must be an employee of the CONTRACTOR and is responsible for management of all operations of the site to include, traffic control, dumping operations, segregation of debris, burning, grinding, and safety.

B. The TDMS foreman will be responsible for monitoring and documenting equipment and labor time and providing the daily operational report to the AUTHORITY Director, Customer Services or designee.

2.9.2 TDMS Night Foreman

A. The TDMS night foreman must be an employee of the CONTRACTOR and is responsible for managing all night operations approved by the AUTHORITY.

B. The TDMS night foreman will be responsible for monitoring and documenting equipment and labor time and providing the daily operational report to the AUTHORITY Director, Customer Information Services or designee.

2.9.3 TDMS Management Plan

A. Once the TDMS is identified by the AUTHORITY, the CONTRACTOR will provide a Site Management Plan.

B. Three (3) copies of the plan are required. The plan shall be drawn to a scale of 1" = 50' and address the following functions:

1. Access to site
2. Site preparation -clearing, erosion control, and grading
3. Traffic control procedures
4. Safety
5. Segregation of debris
6. Location of ash disposal area, hazardous material containment area, CONTRACTOR work area, and inspection tower
7. Location of incineration operations, grinding operation (if required). Burning operations require a 100-foot clearance from the stockpile and a 1000-foot clearance from structures.
8. Specific plan including and location for the final disposal destination of the mulch/wood chips generated at the public or private TDMS.

2.9.4 Inspection Tower

The CONTRACTOR shall construct an inspection tower at each TDMS within three (3) calendar days of natural disaster. The tower shall be constructed using pressure treated wood or steel scaffold. The floor elevation of the tower shall be 10-feet above the existing ground elevation. The floor area shall be a minimum 8' by 8', constructed of 2"x 8" joists, 16" O.C. with 3/4" plywood supported by a minimum of four 6" x 6" posts. A 4-foot high wall constructed of 2" x 4" studs and ½" plywood shall protect the perimeter of the floor area. The floor area shall be covered with a roof. The roof shall provide a minimum of 6'-6" of headroom below the support beams. Steps with a handrail shall provide access to the tower. Inspection towers must provide a dry area for employees and meet all FEMA and OSHA requirements.

2.9.5 Grinding Operation

The CONTRACTOR shall have grinder(s) on site and in operation within five (5) calendar days following a natural disaster. Failure to provide sufficient grinding capacity to accommodate expected incoming volumes and allow site to operate in an efficient manner within five (5) calendar days shall result in liquidated damages of $10,000 per day. There shall be no period longer than 24 hours in which grinding activity may stop due to equipment or operational failure. Failure to provide back-up equipment within 24 hours shall result in liquidated damages of $2,000 per hour per approved hours of grinding operation per day until grinding activity resumes.

2.9.6 Household Hazardous Waste Containment Area

The CONTRACTOR shall construct a hazardous material containment area at each TDMS. The area shall be 30' x 30'. The perimeter shall be lined with hay bales and staked in place. The area shall be lined with a heavy gage plastic to provide a waterproof barrier. Additional plastic sufficient to cover the area is required to prevent rain from entering the containment area. Site run-off must be redirected from the containment area by site grading.

2.10 PERFORMANCE OF CONTRACTOR

A. It is the intent of this Agreement to ensure that the CONTRACTOR provides a timely quality level of services. To this end, all complaints received by the Emergency Management Coordinator or designee and reported to the CONTRACTOR shall be promptly resolved pursuant to the provisions of this Agreement.

B. The Emergency Management Coordinator or designee may levy administrative charges for the following infractions:

1. Failure to open pre-storm identified sites within three (3) calendar days of after being tasked by the AUTHORITY liquidated damages of $10,000 per day for each day not opened.
2. Closure of TDMS due to CONTRACTOR equipment or operational failures liquidated damages of $25,000 per day, for each day site must remain closed.

C. Failure to provide back-up grinder(s) within 24 hours of equipment breakdown liquidated damages of $2,000 per hour per approved grinding hours of operation per day.

D. CONTRACTOR may also be subject to non-payment and liquidated damages of $200 for each occurrence of the following infractions:

1. Failure to provide audit quality information by 5:00 p.m. of the following day of operation.
2. Loads not properly tarped or otherwise covered.
3. Mixing debris hauled from other sources with debris hauled under this Agreement.
4. Mixing vegetation debris with C & D material.

E. CONTRACTOR may be immediately terminated and not paid for the following:

1. Collection of any non-eligible, non-AUTHORITY approved stumps or debris.
2. Moving to another designated Collection Service Area without prior AUTHORITY approval.
3. Failure to provide service in accordance with guidelines set forth by FEMA and the AUTHORITY.
4. Soliciting work from private citizens or others to be performed in the designated Collection Service Area during the period of this Agreement.
5. Alteration of placards placed on certified trucks and/or trailers.

Any disputes regarding Performance of Contractor will be presented to the Emergency Management Coordinator or designee for review. The Emergency Management Coordinator or designee shall complete review and make determination within three (3) calendar days. Decisions of the Emergency Management Coordinator or designee shall be final.

REMAINDER OF PAGE LEFT BLANK INTENTIONALLY

PART III
PROPOSAL SUBMISSION REQUIREMENTS

3.1 PROPOSAL SUBMISSION REQUIREMENTS AND FORMAT

A. The AUTHORITY uses Negometrix, a 100% digital method of accessing and responding to solicitations. Therefore, PROPOSERS must submit their proposals via Negometrix. The AUTHORITY must receive all Proposals no later than **2:00 P.M.**, Eastern Time on the date established in *Part I, Section 5 – Procurement Schedule*. The complete Proposal package shall be submitted through Negometrix. Should the PROPOSER have any issues with any interaction with the e-Procurement system, PROPOSER is encouraged to contact the Negometrix support desk for assistance as follows: https://support-us.negometrix.com/support/solutions/articles/44000141067-negometrix-supplier-guide.

B. Marketing brochures or any other information not pertaining to this RFP shall not be included in the Proposal.

C. Proposals should demonstrate that the PROPOSER is qualified to perform the Scope of Work based upon relevant professional experience.

3.2 CONTENT:

The PROPOSER shall provide the appropriate information in accordance with the content requirements set forth in the following subsections. To allow the Evaluation Committee to more effectively review the Proposals, PROPOSERS shall provide all requested information in the order and in the format requested below.

3.2.1 Title Page

The Title Page shall include the RFP Title and Number. The page shall indicate clearly the name of the PROPOSER submitting the Proposal and the name, address, phone number, fax number and e-mail address of the PROPOSER'S designated contact person. The PROPOSER'S designated contact person is the individual who shall be the main point of contact for the AUTHORITY to communicate with regarding this procurement.

3.2.2 Table of Contents

3.2.3 General Information

PROPOSER shall provide completed Proposal Forms 1 – 7 as follows:

3.2.3.1 *Proposal Form 1 – Transmittal Letter*

PROPOSER shall submit a completed Proposal Form 1 – Transmittal Letter acknowledging, among other things, that the PROPOSER has completely reviewed, understands, and agrees to be bound by the requirements of this RFP. The Proposal Transmittal Letter shall be signed by a representative of the PROPOSER who is empowered to sign it and to commit the PROPOSER to the obligations contained in the Proposal.

3.2.3.2 *Proposal Form 2 – Proposal Bond*

PROPOSER shall submit a completed Proposal Form 2 – Proposal Bond as described in *Part I, Section 11 - Bond Requirements*.

3.2.3.3 *Proposal Form 3 –Price Proposal*

A. PROPOSER shall submit a completed Proposal Form 3 – Price Proposal. PROPOSER is required to submit prices for Part A, Part B, and Part C. However, Part A will be utilized for evaluation of the Price Proposal scoring of the RFP. Therefore, unit prices for all Items 1 through 6 in Part A must be submitted. No minimum or maximum amount of work is being promised.

B. The AUTHORITY may request explanations for any out-of-balance pricing, explanations for any pricing it deems too low or too high, and to negotiate a best and final price with the best ranked PROPOSER(S). In addition, the AUTHORITY reserves the right to request additional pricing, negotiated by hourly rate, lump sum, or not-to-exceed amount to perform services other than lobbying.

3.2.3.4 *Proposal Form 4 – Non-Collusion Affidavit*

PROPOSER shall provide a completed Proposal Form 4 – Non-Collusive Affidavit as described in *Part I, Section 13 – Non-Collusion Affidavit*.

3.2.3.5 *Proposal Form 5 – Drug-Free Workplace*

PROPOSER shall provide a completed Proposal Form 5 – Drug-Free Workplace.

3.2.3.6 *Proposal Form 6 – PROPOSER'S Qualification Statement*

PROPOSER shall provide a completed Proposal Form 6 – Proposer's Qualification Statement.

3.2.3.7 *Proposal Form 7 – Scrutinized List Certification*

PROPOSER shall provide a completed Proposal Form 7 – Scrutinized List Certification.

3.2.4 Minimum Requirements

The PROPOSER shall substantiate in its submittal that it meets or exceeds the following minimum requirements. Failure to do so may be cause for disqualification of its submittal:

A. The PROPOSER, both corporate and individual, must be fully licensed and certified for the type of work to be performed in the **State of Florida** at the time of submittal of their response to the RFP. Should the PROPOSER not be fully licensed and certified, its submittal will be rejected;

B. PROPOSER must be engaged in providing the services as outlined in this RFP;

C. PROPOSER must have a demonstrated comprehensive understanding in areas listed in this RFP. Understanding and previous experience are essential criteria in the qualifying process;

D. PROPOSER'S personnel and management to be utilized for the services described in this RFP shall be knowledgeable in their areas of expertise. The AUTHORITY reserves the right to perform investigations as may be deemed necessary to insure that competent persons will be utilized in the performance of the contract.

E. PROPOSER shall provide evidence of current levels of insurance as stipulated in the sample Agreement of this RFP.

3.2.5 Experience and Qualifications Narrative

PROPOSER shall demonstrate the following:

A. Provide a comprehensive description of all mobilizations (minimum of three) performed as a prime contractor for disaster debris services collecting and processing a minimum of 1 million cubic yards of debris collected from public right of ways. PROPOSERS unable to identify three or more mobilizations meeting the 1 million cubic yard threshold, per each mobilization, are requested to submit all relevant experience they have that documents the ability to perform the services (right of way collection and TDMS management) as requested by this RFP. No limitation exists for the period of time a PROPOSER may go back to describe the experience as requested. Do not show work performed as a sub-contractor. **(PROPOSAL FORM 6 - FORM A)**

   For each mobilization the PROPOSER is requested to identify the following:

   - Name and type of storm event
   - Date and location
   - Narrative of disaster debris services of work performed during mobilization event
   - Total value of contract for services performed
   - Number of cubic yards of debris collected by PROPOSER from public right of ways during mobilization
   - Number of cubic yards of debris handled by PROPOSER at TDMS during mobilization
   - Name, address, and telephone number of customers point of contact for reference purposes.

B. List all emergency debris removal and disposal contracts performed in the last three (3) years as a prime contractor. **(PROPOSAL FORM 6 - FORM B)**

3.2.6 General Operations Plan

PROPOSER shall provide the following:

1. At a minimum a detailed Mulch Disposal Plan. The AUTHORITY is committed to recycling and or beneficial re-use of mulch. Additional consideration will be taken for Beneficial Re-Use Plan. PROPOSER is required to provide a full description of how PROPOSER intends to dispose and or re-use one million (1,000,000) cubic yards of mulch. PROPOSER is required to address how PROPOSER intends to comply with all federal, state, and local guidelines pertaining to mulch disposal. PROPOSER is also required to submit any agreement(s) he/she currently has for the disposal and or beneficial re-use of mulch. PROPOSER is required to give a full description of their end use plan.

2. At a minimum a detailed TMDS Plan pertaining to Construction Debris (C & D) Recycling and or Reduction for estimated five hundred thousand (500,000) cubic yards. The AUTHORITY requests that PROPOSER implements a recycling and/or reduction program for C & D material to minimize amount of debris that will go to a landfill. PROPOSER is requested to address programs they will implement to facilitate recycling and or reduction of construction debris waste.

3. Resumes for the PROPOSER'S management team and all key personnel who will be assigned to the agreement to include, among other things: names, job titles, responsibilities, and applicable debris management experience.

4. Provide private TDMS available for use in Palm Beach County or close proximity. Provide letters of agreements with the owners for use of such sites. Identify the location of the sites and site

configuration. Five (5) additional points will be provided if PROPOSER submits additional private TDMS.

5. Provide description of other emergency services performed, e.g.: shelter, generators, roofing, communications, food, ice, etc.

3.2.7 Cost (Proposal Form 3):

A. The pricing structure submitted in Proposal Form 3 – Price Proposal shall be firm. However, the AUTHORITY reserves the right to negotiate a "best and final" price for each task category with the highest ranked PROPOSER(S).

B. Price Proposal will include be evaluated based on Proposal Form 3 – Part A – Volume Based Pricing for 3,000,000 Cubic Yards (CY) Debris Disaster. Proposer must provide price for all line **Item 1 through Item 6**. Failure to do so may render your Proposal as non-responsive.

C. PROPOSER is also required to submit pricing for Part B – Hourly Rates and Part C – Unit Cost Schedule as well, even though these sections will not be used to evaluate the Price Proposal of the RFP.

3.2.8 Small/Minority/Women Business Enterprise (S/M/WBE) Participation

A. The Governing Board of the AUTHORITY has implemented the Economic Inclusion Policy and Procedures administered by the Equal Business Opportunity (EBO) Program Office to ensure that all segments of its business population, including, but not limited to small, local, minority, and women-owned businesses, have an equitable opportunity to participate in the AUTHORITY'S procurement process. Refer to Section 6 of the AUTHORITY's Purchasing Manual. Small Business Enterprise (SBE) and Minority/Women Business Enterprise (M/WBE) is hereby mentioned as ("S/M/WBE") in the RFP. The PROPOSER also agrees that by submitting its response to this RFP that it constitutes an acknowledgement that it has reviewed this Section of the AUTHORITY's Purchasing Manual.

B. In accordance with Section 6.1 through 6.4 of the Purchasing Manual, Economic Inclusion Policy and Procedures, the AUTHORITY's Equal Business Opportunity (EBO) Office **has NOT applied an Affirmative Procurement Initiative (API) to this procurement. Therefore, no local S/M/WBE participation is required by this solicitation.**

C. The AUTHORITY does however encourage vendors to include Small/Minority/Women Business Enterprises (S/M/WBE) participation, whenever possible. For information on the Economic Inclusion Policy and Procedures, please contact the EBO Office at 561-640-4000 or visit www.swa.org/EBO.

3.2.9 PROPOSER'S Qualification Statement – (Proposal Form 6)

3.2.10 Scrutinized Business Certification – (Proposal Form 7)

PART IV
PROPOSAL EVALUATION AND AWARD

4.1. GENERAL:

All Proposals submitted in response to this RFP will be evaluated by the AUTHORITY'S Evaluation Committee based on the information supplied per *Part III – Proposal Submission Requirements* and utilizing criteria specified in *Part IV – Proposal Evaluation and Award*.

4.2. EVALUATION CRITERIA:

The review and analysis of the Proposals by the /Evaluation Committee will be based on the following criteria:

- Submission of a complete package including all Forms
- Experience and Qualifications
- General Operations Plan
- Price Proposal

4.3. EVALUATION METHOD:

A. Evaluation Committee members will conduct a completeness review of the Proposals. Proposals must include all requirements specified in *Part III – Proposal Submission Requirements.* Minor informalities or irregularities may be waived by the AUTHORITY. Those Proposals found to be complete, will then be ranked by individual members. At its discretion the AUTHORITY may require any PROPOSER(S) to make an oral presentation of his/her submittal. An oral presentation provides an opportunity for the PROPOSER(S) to clarify his/her submittal for the AUTHORITY. The AUTHORITY, if deemed necessary, will notify the PROPOSER(S) that an oral presentation will be scheduled which may result in a re-evaluation of proposals.

B. *Table 2 – Evaluation Criteria and Points* provide guidelines for the Evaluation Committee members for the ranking of Proposals. In each category where points are to be assigned by individual Evaluation Committee members, PROPOSERS may receive up to the maximum allowable number of points for each category. When awarding points to a proposal, the Evaluation Committee members will be encouraged to use the entire range of awardable points in each category. The total points awarded by each Evaluation Committee member to each Proposal will be tallied and ranked. The proposal with the most points will be ranked a 1; the proposal with the second most points will be ranked a 2; the proposal with the third most points will be ranked a 3, and so forth until each proposal has been awarded points and ranked accordingly. The Proposal with the lowest number 1 rankings will be ranked first overall and recommended for award of the Contract. The Evaluation Committee members will continue in this manner and provide overall rankings to each proposal until all proposals have been given an overall ranking. No points will be awarded for use of local S/M/WBE or S/M/WBE's. The use of these firms is encouraged strictly on a voluntary basis and will not be an evaluative factor in the award of the final Contract awarded pursuant to this solicitation.

Table 2 - Evaluation Criteria and Points

EVALUATION CRITERIA	POINTS
Experience and Qualifications	40[1]
General Operations Plan	40[2]
Price Proposal	20[3]
TOTAL:	**100**

Points footnotes as follows:

1. PROPOSER will receive up to 40 points if PROPOSER submits and exceeds the minimum requirements listed in *PART III, Section 3.2.5 - Experience and Qualifications Narrative and also demonstrate applicable recent experience.* Points will be deducted if these requirements are not met.

2. PROPOSER will receive up to 40 points if PROPOSER submits and exceeds the minimum requirements listed in *Part III, Section 3.2.6 – General Operations Plan*. Points will be deducted if any of these requirements are not met.

3. PROPOSER who submits the Proposal with the lowest Total Proposal Price will receive 20 points. *See example below.*

Total Proposal Price	Percentage of Available Points	Total Points
$35,000,000.00	100%	20.00
$36,000,000.00	97%	19.44
$37,000,000.00	95%	18.92
$38,000,000.00	92%	18.42
$39,000,000.00	90%	17.95
$40,000,000.00	88%	17.50
$41,000,000.00	85%	17.07
$42,000,000.00	83%	16.67
$43,000,000.00	81%	16.28
$44,000,000.00	80%	16.36
$45,000,000.00	78%	15.56

Percentage of Available Points: Lowest Submittal = 100% of Available Points
Calculation for next lowest, etc.= (Lowest Submittal/Next Lowest Submittal) x 20

4.4. AWARD:

A. The AUTHORITY anticipates, but does not guarantee, award to the PROPOSER who submits the Proposal determined by the SWA Board to be the most advantageous. The AUTHORITY anticipates awarding to the four (4) highest ranked PROPOSERS but reserves the right to award more or few Agreements if it is in the best interest of the AUTHORITY.

B. The AUTHORITY intends to enter into the Agreement negotiations with the highest ranked PROPOSER. If the AUTHORITY and the best ranked PROPOSER cannot negotiate a successful Agreement, the AUTHORITY may terminate such negotiations and begin negotiations with the next best ranked PROPOSER. No PROPOSER shall have any rights against the AUTHORITY arising from such negotiations.

C. Agreements awarded will be based on the final ranking achieved during the selection process. The number of Agreements that are activated will be based on the magnitude and complexity of the AUTHORITY'S post disaster needs. It will be in the AUTHORITY'S sole discretion how many Agreements are activated.

D. The price structure submitted in the Proposals shall be firm. However, the AUTHORITY reserves the right to negotiate a "best and final" price with the best ranked PROPOSER.

E. The Agreements will be for a term of three (3) years with option to extend for three (3) additional years under the same terms and conditions. The selected PROPOSERS will standby for much of the duration of the three (3) years and optional additional three (3) years extension, and only be called to active duty when a debris generating event occurs. This call to active duty may be repeated several times within the three (3) year and optional three (3) years extension Agreement period depending on the number of separate debris events that occur.

F. The PROPOSER understands that this RFP does not constitute an agreement or a contract with the PROPOSER. An official agreement or contract is not binding until Proposals are reviewed and accepted and a contract is awarded by the SWA Board and executed by the parties. A Sample Agreement is attached to this RFP. The AUTHORITY anticipates that the final agreement will be in substantial conformance with the Sample Agreement; nevertheless, PROPOSERS are advised that any agreement, which may result from this RFP, may deviate from the Sample Agreement.

REMAINDER OF PAGE INTENTIONALLY LEFT BLANK

PART V
PROPOSAL FORMS

The following Proposal Forms are included:

Proposal Form 1 – Transmittal Letter

Proposal Form 2 - Proposal Bond

Proposal Form 3 – Price Proposal

Proposal Form 4 – Non-Collusion Affidavit

Proposal Form 5 – Drug-Free Workplace

Proposal Form 6 – PROPOSER'S Qualification Statement – with **FORM A** and **FORM B**

Proposal Form 7 – Scrutinized List Certification

REMAINDER OF PAGE INTENTIONALLY LEFT BLANK

PROPOSAL FORM 1 – TRANSMITTAL LETTER

(To be typed on PROPOSER'S Letterhead)

[Date]

Diane LeRay CPPO, CPPB
Procurement Manager, Purchasing Services
Solid Waste Authority of Palm Beach County
7501 North Jog Road
West Palm Beach, FL 33412

Dear Ms. LeRay:

_____ (PROPOSER) hereby submits its Proposal in response to the **Request for Proposal (RFP) No.: 22-201/DL for HURRICANE/DISASTER DEBRIS REMOVAL, REDUCTION AND DISPOSAL** issued by the Solid Waste Authority of Palm Beach County (AUTHORITY) in January 2022.

As a duly authorized representative of the PROPOSER, I hereby certify, represent and warrant, on behalf of the PROPOSER team, as follows in connection with the Proposal:

1. The PROPOSER acknowledges receipt of the RFP and the following Addenda:

No.	Date
_____	_____
_____	_____

2. The submittal of the Proposal has been duly authorized by, and in all respects is binding upon, the PROPOSER.

3. All information and statements contained in the Proposal are current, correct and complete, and are made with full knowledge that the AUTHORITY will rely on such information and statements in qualifying PROPOSER.

4. The PROPOSER certifies under penalties of perjury that the RFP has been prepared and is submitted in good faith without collusion, fraud or any other action with any other person taken in restraint of free and open competition for the services contemplated by the RFP. As used in this Proposal Form, the word "person" shall mean any natural person, business, partnership, corporation, union, committee, club, or other organization, entity, or group of individuals.

5. The PROPOSER is not currently suspended or debarred from doing business with any governmental entity.

6. The PROPOSER has reviewed all of the engagements and pending engagements of the PROPOSER, and no potential exists for any conflict of interest or unfair advantage.

7. No person or selling agency has been employed or retained to solicit the award of the Agreement under an arrangement for a commission, percentage, brokerage or contingency fee or on any other success fee basis, except bona fide employees of the PROPOSER.

8. The principal contact person who will serve as the interface between the AUTHORITY and the PROPOSER for all communications is:

Name: _____

Title: _____

Mailing Address: _____

Phone: _____

Fax: _____

E-mail: _____

The PROPOSER has carefully examined all documents constituting the RFP and the addenda thereto and, being familiar with the work and the conditions affecting the work contemplated by the RFP and such addenda, offers to furnish all labor, materials, supplies, equipment, facilities and services which are necessary, proper or incidental to carry out such work as required by and in strict accordance with this RFP and the Proposal.

_____
Name of Proposer

_____
Print Name of Designated Signatory

_____
Signature

_____
Title

State of _____

County of _____

On this _____ day of _____, 20____, before me appeared _____ personally known to me to be the person described in and who executed this _____ and acknowledged that (she/he) signed the same freely and voluntarily for the uses and purposes therein described.

In witness thereof, I have hereunto set my hand and affixed my official seal the day and year last written above.

_____
Signature

Notary Public in and for the State of _____

(Affix Seal here)

_____
(Name printed)

Residing at _____

My commission expires _____

ACKNOWLEDGMENT OF CONTRACTOR, IF A PARTNERSHIP

State of _____

SS:

County of _____

On this _____ day of _____, 20_____, before me personally came and appeared _____, to me known, and known to me to be one of the members of the firm of _____ described in and who executed the foregoing instrument and he/she acknowledged to me that he/she executed the same as and for the act and deed of said firm.

_____
Notary Public
(Seal)

ACKNOWLEDGMENT OF CONTRACTOR, IF AN INDIVIDUAL

State of _____

SS:

County of _____

On this _____ day of _____, 20_____, before me personally came and appeared _____, to me known, and known to me to be the person described in and who executed the foregoing instrument and acknowledged that he/she executed the same.

_____
Notary Public
(Seal)

PROPOSAL FORM 2 – PROPOSAL BOND

KNOW ALL MEN BY THESE PRESENTS, that we, the undersigned:

_____, as Principal and
(Name of Proposer)

_____, as Surety, are
(Name of Surety)

hereby held and firmly bound unto the Solid Waste Authority of Palm Beach County, West Palm Beach, Florida, as Obligee, in the sum of:

_____

_____ Dollars ($_____) / **5% of the Performance and Payment Bond, which is in the amount of $10,000,000,** as liquidated damages for payment of which, well and truly to be made, we hereby jointly and severally bind ourselves, our heirs, executors, administrators, successors, and assigns.

The condition of this obligation is such that whereas the Principal has submitted to the Solid Waste Authority of Palm Beach County a certain Proposal attached hereto and made a part hereof, to enter into an Agreement, hereinafter referenced to as the **AGREEMENT FOR HURRICANE/DISASTER DEBRIS REMOVAL, REDUCTION, AND DISPOSAL.**

NOW THEREFORE,

a. If said Proposal shall be rejected or withdrawn as provided in the Request for Proposal or, in the alternative,

b. If said Proposal shall be accepted and the Principal shall duly execute and deliver the Agreement attached hereto and shall furnish all insurance requirements, the specified Performance and Payment Bond for the faithful performance of the Agreement and for the payment of labor and materials furnished for the performance of the Agreement,

then this obligation shall be void, otherwise it shall remain in full force and effect, it being expressly understood and agreed that the liability of the Surety for any and all claims hereunder in no event shall exceed the amount of this obligation.

The Surety, for value received, hereby agrees that the obligations of said Surety and its bond shall be in no way impaired or affected by any extensions of the time within which such Proposal may be accepted and said Surety does hereby waive notice of any such extensions.

IN WITNESS WHEREOF, the parties hereto have duly executed this bond on the _____ day of _____, 20____.

PRINCIPAL: _____

By: _____
Signature

(Seal)

WITNESS:

1. _____

2. _____

Name: _____

Title: _____

Address: _____

_____

Telephone: _____

SURETY: _____

By: _____
Signature

(Seal)

WITNESS:

1. _____

2. _____

Name: _____

Title: _____

Address: _____

_____

Telephone: _____

Surety companies executing bonds **must** appear on the Treasury Department's most current list (Circular 570 as amended) and be authorized to transact business in the State of Florida, in accordance with Florida Statute 287.0935, and be approved by the Solid Waste Authority of Palm Beach County.

PROPOSAL FORM 3 – PRICE PROPOSAL

PART A – VOLUME BASED PRICING FOR 3,000,000 CUBIC YARD (CY) DEBRIS DISASTER

ITEM/DESCRIPTION	ESTIMATED QUANTITY	UNIT	PRICE PER CY	EXTENSION
1.0 Public Property and Right of Way Collection, Loading and Hauling to a designated TDMS.				
A. Vegetation	2,500,000	CY		
B. Construction Debris / Mixed Debris	500,000	CY		
2.0 TDMS operation to include placement of monitoring towers, portable toilets, keeping on-site and adjacent roads area clean of trash and garbage, debris acceptance, pile management, and Phase I Reclamation.	3,000,000	CY		
3.0 Processing of debris through grinding and/or chipping.	2,500,000	CY		
4.0 Loading, hauling and disposing wood chips to final destination. ***(This rate includes disposal cost)***	1,000,000	CY		
5.0 Volume reduction through air curtain incineration.	2,500,000	CY		
6.0 Loading and hauling of construction debris and/or mixed debris from TDMS to a permitted C&D recycling facility or any other designated Disposal Facility. ***(This rate <u>shall not</u> include disposal cost). Based on miles from TDMS to final destination– 1 way.***				
A. 0 ≤ 20 miles	500,000	CY		
B. > 20 ≤ 50 miles	500,000	CY		
C. > 50 ≤ 100 miles	500,000	CY		
AVERAGE: (Item 6.0 A-C)				
AVERAGE: (Item 6.0 A-C) **X 500,000** CY **=**				$
TOTAL PROPOSAL PRICE: (Items 1.0 - 4.0; 6.0)				$

PROPOSER MUST PROVIDE PRICE FOR ALL LINE ITEMS 1 THRU 6. FAILURE TO DO SO MAY RENDER YOUR PROPOSAL TO BE DEEMED NON-RESPONSIVE.

Unit Prices, unless otherwise indicated, shall include all labor (operators, laborers, supervisors) and materials including but not limited to: supplies, equipment maintenance, repairs, repair parts, fuels, lubricants, cellular phones, transportation, and housing, if required, necessary to accomplish the project. The quantities and distributions are estimated for the purpose of making an award. Locations of sites, debris quantities, destinations, material densities, etc. may differ substantially in an actual disaster.

Assumptions: 3,000,000 cubic yards of debris consisting of 2,500,000 cubic yards of vegetation debris and 500,000 cubic yards of mixed debris.

PROPOSAL FORM 3 – PRICE PROPOSAL

PART B – HOURLY RATES

TDMS SET-UP AND CLOSURE AND DEBRIS CLEARANCE FOR ACCESS - OPTIONAL USE BY COUNTY AND OTHER GOVERNMENTAL ENTITIES			
EQUIPMENT AND LABOR RATES			
EQUIPMENT TYPE	**HOURLY EQUIPMENT RATE**	**HOURLY LABOR RATE**	**TOTAL HOURLY RATE**
Bobcat Loader			
Crew Foreman w/ Cell Phone and Pickup			
Dozer, Tracked, D5 or similar			
Dozer, Tracked, D6 or similar			
Dozer, Tracked, D7 or similar			
Dozer, Tracked, D8 or similar			
Dump Truck, 18 CY-20 CY			
Dump Truck, 21CY-30 CY			
Generator and Lighting			
Grader w/ 12' Blade			
Hydraulic Excavator, 1.5 CY			
Hydraulic Excavator, 2.5 CY			
Knuckleboom Loader			
Laborer w/ Chain Saw			
Laborer w/ small tools, traffic control, flag person			
Lowboy Trailer w/ Tractor			
Operations Manager w/ Cell Phone and Pickup			
Pickup Truck, .5 Ton			
Soil Compactor 81 HP+			
Soil Compactor to 80 HP			
Soil Compactor, Towed Unit			
Truck, Flatbed			
Tub Grinder, 800 to 1,000 HP			
Water Truck			
Wheel Loader, 2.5 CY, 950 or similar			
Wheel Loader, 3.5-4.0 CY, 966 or similar			
Wheel Loader, 4.5 CY, 980 or similar			
Wheel Loader-Backhoe, 1.0-1.5 CY			
Other – Please List			

Attach additional sheet with equipment type and labor rates, if needed

PROPOSAL FORM 3 – PRICE PROPOSAL

PART C – UNIT COST SCHEDULE

ITEM	HAZARDOUS STUMP REMOVAL, HAULING, AND DISPOSAL	UNIT	UNIT COST
1.	24-inch diameter to 48.99-inch diameter	Stump	
2.	49-inch diameter and greater	Stump	
3.	Stump Fill Dirt – Fill dirt for stump holes after removal	CY	
	HAZARDOUS HANGING LIMBS (HANGERS), AND HAULING To include removal of all hanging limbs. Limbs to be cut and placed on the right of way for collection as vegetative debris.		
4.	2-inch diameter and greater	Tree	
	HAZARDOUS TREE REMOVAL, AND HAULING Trees to be flush cut at ground level and placed on the right of way for removal as vegetative debris.		
5.	6-inch diameter to 12.99-inch diameter	Tree	
6.	13-inch diameter to 24.99-inch diameter	Tree	
7.	25-inch diameter to 48.99-inch diameter	Tree	
8.	49-inch diameter and greater	Tree	

NOTE:
The following is information only and will NOT be considered in the evaluation of this RFP

The AUTHORITY reserves the right to use this contract to handle small quantities of debris removal and as support for our Franchise Contracts as needed. Below is a daily rate to remove debris. The AUTHORITY will pay for the disposal cost. There is no requirement to provide a rate, however if you do, we expect your company to honor this special service and respond within 48 hours at the rate below.

COLLECTION SERVICE ONLY	
EQUIPMENT	DAILY RATE (10 HRS/DAY)
Knuckleboom Loader and Operator	$

PROPOSAL FORM 4 – NON-COLLUSION AFFIDAVIT

State of _____

County of _____

Being duly sworn deposes and says:

That she/he is an officer of the parties making the foregoing Proposal, that such Proposal is genuine and not collusive or sham; that said PROPOSER has not colluded, conspired, connived or agreed, directly or indirectly with any PROPOSER or person, to put in a sham bid or to refrain from bidding and has not in any manner, directly, or indirectly, sought by agreement or collusion or communication or conference with any person, to fix the price or affiant or any other PROPOSER, or to fix any overhead, profit or cost element of said price, or that of any other PROPOSER, or to secure any advantage against the AUTHORITY, or any person interested in the proposed contract and that all statements in said Proposal are true.

_____
Name of Proposer

_____
Print Name of Designated Signatory

_____
Signature

_____
Title

On this _____ day of _____, 20____, before me appeared _____ personally known to me to be the person described in and who executed this _____ and acknowledged that (she/he) signed the same freely and voluntarily for the uses and purposes therein described.

In witness thereof, I have hereunto set my hand and affixed my official seal the day and year last written above.

_____
Signature

Notary Public in and for the State of _____

(Affix Seal here)

_____
(Name printed)

Residing at _____

My commission expires _____

PROPOSAL FORM 5 – DRUG-FREE WORKPLACE

The undersigned vendor in accordance with Florida Statute 287.087 hereby certifies that _____ does:

(Name of Business)

1. Publish a statement notifying employees that the unlawful manufacture, distribution, dispensing, possession, or use of a controlled substance is prohibited in the workplace and specifying the actions that will be taken against employees for violations of such prohibition.

2. Inform employees about the dangers of drug abuse in the workplace, the business's policy of maintaining a drug-free workplace, any available drug counseling, rehabilitation, and employee assistance programs, and the penalties that may be imposed upon employees for drug abuse violations.

3. Give each employee engaged in providing the commodities or contractual services that are under bid a copy of the statement specified in subsection (1).

4. In the statement specified in subsection (1), notify the employees that, as a condition of working on the commodities or contractual services that are under bid, the employee will abide by the terms of the statement and will notify the employer of any conviction of, or plea of guilty or nolo contendere to, any violation of Chapter 893 or of any controlled substance law of the United State or any state, for a violation occurring in the workplace no later than five (5) days after such conviction.

5. Impose a sanction on, or require the satisfactory participation in a drug abuse assistance or rehabilitation program if such is available in the employee's community, by any employee who is so convicted.

6. Make a good faith effort to continue to maintain a drug-free workplace through implementation of this section.

As the person authorized to sign the statement, I certify that this firm complies fully with the above requirements.

_____
Print Name of Designated Signatory

_____
Signature

_____
Date

PROPOSAL FORM 6 - PROPOSER'S QUALIFICATION STATEMENT

The undersigned certifies under oath the truth and correctness of all statements and of all answers to questions made hereinafter:

SUBMITTED TO: **SOLID WASTE AUTHORITY OF PALM BEACH COUNTY**
PURCHASING SERVICES DEPARTMENT
7501 N. Jog Road
West Palm Beach, FL. 33412

Submitted by:

Name: _____

Address:_____

City, State, Zip: _____

Federal Identification Number (FID) _____

Check One	
Corporation:	☐
Partnership:	☐
Individual:	☐
Other*	☐

(* if other is being checked, please provide supporting documentation to validate the legality of the Firm)

1. State the true, exact, correct, and complete name of the partnership, trade or fictitious name under which you do business and the address of the place of business.

   The correct name of the PROPOSER is:

   _____

   The address of the principal place of business is:

   _____

   _____

2. If PROPOSER is corporation, answer the following:

   a. Date of Incorporation: _____
   b. State of Incorporation: _____
   c. President's name: _____
   d. Vice President's name: _____
   e. Secretary's name: _____
   f. Treasurer's name: _____
   g. Name and Address of Resident Agent: _____
      _____

3. If PROPOSER is an individual or a partnership, answer the following:

   a. Date of organization: _____
   b. Name, address, and ownership units of all partners:
      _____
      _____
      _____
   c. State whether general or limited partnership: _____

4. If PROPOSER is other than an individual, corporation or partnership, describe the organization and give the name and address of principals:

_____
_____
_____

5. If PROPOSER is operating under a fictitious name, submit evidence of compliance with the Florida Fictitious Name Statute.

_____

6. How many years has your organization been in business under its present business name? _____

Under what other former names has your organization operated?

_____
_____
_____

7. Indicate registration, license numbers or certificate numbers for the businesses or professions, which are the subject of this RFP solicitation. Please attach certificate of competency and/or state registration.

_____
_____
_____

8. Provide a narrative of Firm's Safety Program, Quality Assurance/Quality Control Management methods.

_____
_____
_____

9. PROPOSER shall provide **FORM A** and **FORM B** attached to this Proposers Qualification Statement in response to Experience and Qualifications as per Part III – PROPOSAL SUBMISSION REQUIREMENTS. **FORMS A & B** are attached: YES ☐ NO ☐

10. List and describe all bankruptcy petitions (voluntary or involuntary) which have been filed by or against the PROPOSER, its parent or subsidiaries or predecessor organizations during the past five (5) years. Include in the description, the disposition of each such petition.

_____
_____
_____
_____

11. A list of all enforcement actions against the facility for the last three (3) years including any consent orders entered, notices of violations received, and any judgments against the facility. Also, list the amount of any fines, penalties, or judgments, or other infractions in which the destination facility or facilities have received in the most current three (3) years of operation.

_____
_____
_____
_____
_____

12. List and describe any disciplinary action, administrative proceeding, malpractice claim or other like proceeding against your Firm or any of its lawyers, whether current or pending, as well as any such action, proceeding or claim occurring during the last five (5) years.

_____

_____

_____

_____

13. Has the PROPOSER, its principals, officers, or predecessors' organization(s) been CONVICTED of a Public Entity Crime, debarred, or suspended from bidding by any governmental entity during the last five (5) years? If so, provide details.

_____

_____

_____

_____

14. Has the PROPOSER in the past four (4) years, been rendered a final adjudicated determination in a legal or administrative proceeding in the State of Florida that the PROPOSER discriminated against its subcontractors, vendors, suppliers, or commercial customers? If yes, PROPOSER shall provide a list of all instances to include but not limited to; description of the status or resolution of the complaint, including any remedial action taken. (Attach additional sheets as necessary)

_____

_____

_____

_____

The PROPOSER acknowledges and understands that the information contained in response to this Qualifications' Statement shall be relied upon by the Solid Waste Authority of Palm Beach County (AUTHORITY), in awarding the contract and such information is warranted by PROPOSER to be true. The discovery of any omission or misstatement that materially affects the PROPOSER's qualifications to perform under the contract shall cause the AUTHORITY to reject the proposal, and if after the award, to cancel and terminate the award and/or contract.

(Signed): _____

(Printed Name): _____

(Title): _____

FORM A

COLLECTION and/or TDMS OPERATING

Experience as a Prime Contractor ONLY

List all activations for which your company collected and/or processed greater than 1 million cubic yards of debris.

Disaster Name	Date	Location	Services Provided	Contract Amount	TTL CY Collected or Processed	Contact Name, Address, Phone #

FORM B

DEBRIS REMOVAL, DEBRIS SITE OPERATIONS/PROCESSING, and FINAL DISPOSAL DESTINATION

Experience as a Prime Contractor ONLY

List all activations for which your company performed as the Prime Contractor for the past three (3) years (commencing 11/2018)

Disaster Name	Date	Location	Services Provided (Please circle selection)	Contract Amount	TTL CY Collected or Processed	Contact Name, Address, Phone #
			A B C			
			A B C			
			A B C			
			A B C			
			A B C			
			A B C			
			A B C			
			A B C			
			A B C			
			A B C			
			A B C			

Please use the following key for Services Provided: **A=Debris Removal**; **B=Debris Site Operations/Processing**; **C=Final Disposal Destination**.
List all letters that are applicable for each activation listed.

CERTIFICATION PURSUANT TO FLORIDA STATUTE §215.4725

HURRICANE/DISASTER DEBRIS REMOVAL, REDUCTION AND DISPOSAL

RFP NO.: 22-201/DL

I, _____, on behalf of _____,
Print Name Name of Business

certifies that _____ does not:
Name of Business

1. Participate in a boycott of Israel; and
2. Is not on the Scrutinized Companies that Boycott Israel list; and
3. Is not on the Scrutinized Companies with Activities in Sudan List; and
4. Is not on the Scrutinized Companies with Activities in the Iran Petroleum Energy Sector List; and
5. Has not engaged in business operations in Cuba or Syria.

As the person authorized to sign the statement, I certify that this Firm complies fully with the above requirements.

_____ _____
PROPOSER'S SIGNATURE DATE

PART VI
ATTACHMENTS

The following Attachments are included:

Attachment A – Sample Contract Agreement

Attachment B – Task Order Disaster Debris Management

Attachment C – Pre-Approved Temporary Debris Management Sites Map

Attachment D – Public Assistance Program and Policy Guide

Attachment E – Mobilization Schedule

Attachment F – FHWA Form 1273

Attachment G – Buy America Requirements

Attachment H – Performance and Payment Bond

YOUR PARTNER FOR
SOLID WASTE SOLUTIONS

ATTACHMENT A

SAMPLE AGREEMENT FOR

_____ SERVICES

BETWEEN

SOLID WASTE AUTHORITY OF PALM BEACH COUNTY

AND

(NAME OF CONSULTANT)

AGREEMENT NO. 22-XXX

SOLID WASTE AUTHORITY OF PALM BEACH COUNTY
7501 NORTH JOG ROAD
WEST PALM BEACH, FLORIDA 33412
(561) 640-4000

TABLE OF CONTENTS

ARTICLE		PAGE
1.	Effective Date and Incorporation of Recitals	1
2.	Services to be performed by Contractor	1
3.	Compensation	1
4.	Insurance	2
5.	Standard of Care	3
6.	Indemnification	3
7.	Independent Contractor	3
8.	Authority to Conduct Business	4
9.	Compliance with Laws	4
10.	Sub-Contractor	4
11.	Federal and State Taxes	4
12.	Availability of Funds	4
13.	Authority's Responsibilities	4
14.	Default	4
15.	Termination for Convenience	5
16.	Uncontrollable Forces	5
17.	Jurisdiction, Venue, Waiver of Jury Trial and Remedies	5
18.	Commercial Non-Discrimination Policy	6
19.	Waiver	6
20.	Severability	6
21.	Entirety of Agreement and Modification	6
22.	Successors and Assigns	7
23.	Contingent Fees	7
24.	Truth-in-Negotiation Certificate	7
25.	Ownership of Documents	7
26.	Public Records, Access and Audits	7
27.	Inspector General	9
28.	Notice	9
29.	Contract Administration	10
30.	Key Personnel	10
31.	Equal Business Opportunity Program	10
32.	Scrutinized Companies	10
33.	Agreements with other Governmental Entities	11
34.	Third Party Beneficiary Disclaimer	11
35.	E-Verify – Employment Eligibility	11
36.	Confidentiality	11
37.	Payment Adjustment Schedule	12
38.	Order of Agreement Activation/Location Assignment	13
39.	Task Order/Performance	13
40.	Bonds	13
41.	Florida Highway Administration (FHWA) Form 1273	14
42.	Buy America Requirements	14
43.	Disadvantaged Business Enterprises	14
44.	Certification Regarding Suspension and Debarment	15
45.	Access to Records and Their Retention	15
46.	Audit Requirements	15
47.	National Environmental Policy Act (NEPA)	16

48. Americans with Disabilities Act 16
49. Compliance with Title VI, Title VII and other Federal Laws and Regulations 16
50. Convict Labor Prohibition 16
51. Certification Regarding Lobbying Activities 16
52. DHS Seal, Logo, and Flags 16
53. No Obligation by Federal Government 16
54. Program Fraud and False or Fraudulent Statement or Related Acts 16
Contract Execution 17

EXHIBITS

A. Scope of Work 18
B. Fee Schedule 19

ATTACHMENTS

A. Sample Contract Agreement
B. Task Order Disaster Debris Management 20
C. Pre-Approved Temporary Debris Management Sites Map 21
D. Public Assistance Program and Policy Guide 22
E. Mobilization Schedule 23
F. FHWA Form 1273 24
G. Buy America Requirements 36
H. Performance and Payment Bond 37

AGREEMENT FOR PROFESSIONAL SERVICES

This Agreement is made and entered into as of _____, 2022, (hereinafter referred to as the Agreement) by and between **Solid Waste Authority of Palm Beach County**, a dependent special district created by Chapter 2001-331, Laws of Florida, as amended, (hereinafter referred to as AUTHORITY) and **NAME OF CONTRACTOR** (hereinafter referred to as CONTRACTOR), a Corporation, whose Federal Employer ID Number is _____;

Whereas, in accordance with the AUTHORITY's Request for Proposals No. 22-XXX/XX, solicited to employ the services of the CONTRACTOR for the purpose of providing _____ Services, and;

Whereas, CONTRACTOR represents it is capable and prepared to provide such services.

Now, therefore, in consideration of the promises contained herein and other good and valuable consideration, the receipt of which is acknowledged by the other, the parties hereto agree as follows:

ARTICLE 1 - EFFECTIVE DATE AND INCORPORATION OF RECITALS

The foregoing recitals are hereby incorporated herein by reference.

1.1 The Effective Date of this Agreement shall be **(MONTH)(DAY) _____, 2022** and the Initial Term of this Agreement is for three (3) years and shall expire on **(MONTH)(DAY) _____, 2025,** unless terminated earlier as provided for herein.

1.2 The AUTHORITY shall have the option of extending this Agreement for three (3) additional years, as approved by the AUTHORITY's Board or designee, in its sole and unfettered discretion, on the same terms and conditions. Such extension shall be in the form of a written Amendment to the Agreement executed by both parties.

1.3 The continuance of this Agreement from year-to-year is contingent upon successful annual recertification of the CONTRACTOR's capabilities. The recertification process will be a review of the fiscal (bankruptcy, etc.), logistical (equipment availability, etc.), and moral (conviction for environmental crime, conviction for crime against a public entity, etc.) responsibility of the CONTRACTOR and a determination by the AUTHORITY, based on this review, of whether or not the CONTRACTOR continues to be a viable firm to provide the services described in this Contract.

ARTICLE 2 - SERVICES TO BE PERFORMED BY CONTRACTOR

CONTRACTOR shall perform the services as specifically stated in the Scope of Work, attached hereto and made a part hereof as Exhibit A, and/or as may be specifically designated and authorized by the AUTHORITY. Such authorizations will be referred to as Task Orders. Each Task Order shall set forth a specific scope of services, rate/amount of compensation, completion date, and other pertinent details of the task being authorized. The AUTHORITY, by virtue of this Agreement, gives the CONTRACTOR no guarantee of any work/services or any specific amount of work/services that may be accomplished during the period this Agreement is in full force and effect.

ARTICLE 3 - COMPENSATION

3.1 The AUTHORITY shall pay CONTRACTOR in accordance with the Fee Schedule, attached hereto and made a part hereof as Exhibit B. In addition, the parties may negotiate a lump sum or not-to-exceed amount on a per-project basis on an individual Task Order.

3.2 The CONTRACTOR shall submit semi-monthly invoices for services rendered. All invoices must reference the Task Order number. Invoices shall include a statement of progress and appropriate audit quality detail to satisfy the Federal Emergency Management Agency (FEMA) requirements.

.

3.3 Payment of CONTRACTOR by AUTHORITY is not contingent upon the AUTHORITY being reimbursed by the Federal Emergency Management Agency (FEMA). Payment to CONTRACTOR will be made for any work directed by the AUTHORITY which is determined by Federal and State agencies to be ineligible for reimbursement.

3.4 Payment of invoices shall be within thirty (30) days after receipt of a correct, fully documented invoice. All invoices shall be delivered to:

Solid Waste Authority of Palm Beach County
7501 North Jog Road
West Palm Beach, Florida 33412
Attn: Accounts Payable

3.5 CONTRACTOR will clearly mark its final/last billing with the words "Final Invoice". This will certify that all services have been fully performed under this Agreement and that all charges and costs have been invoiced to the AUTHORITY. Thereupon, this account will be closed and any additional charges or costs, not included in the Final Invoice, shall be waived by CONTRACTOR. The AUTHORITY shall not be liable for the payment of any such additional charges or costs not included in the Final Invoice.

3.6 The AUTHORITY will retain 5% of the payment under each Task Order until such time as the entire project is completed to the AUTHORITY's satisfaction and all subcontractors and any material suppliers verify that they have been paid.

ARTICLE 4 - INSURANCE

4.1 During the performance of the Services under this Agreement, CONTRACTOR shall maintain the following insurance policies written by an insurance company authorized to do business in Florida and acceptable to the AUTHORITY.

1. **General Liability** Insurance with bodily injury limits of not less than $1,000,000 for each occurrence, and with property damage limits of not less than $1,000,000 for each occurrence.

2. **Automobile Liability** Insurance with bodily injury limits of not less than $5,000,000 for each person and not less than $5,000,000 for each accident and with property damage limits of not less than $5,000,000 for each accident.

3. **Workers' Compensation** Insurance in accordance with statutory requirements and Employer's Liability Insurance with limits of not less than $500,000 for each accident, $500,000 for each disease, and $500,000 aggregate.

4. **Excess Liability** Insurance with limits of not less than $10,000,000 for each occurrence and annual aggregate.

4.2 Deductible amounts shall not exceed 5% of the total amount of required insurance in each category. Should any policy contain any unusual exclusions, said exclusions shall be so indicated on the certificate(s) of insurance.

4.3 CONTRACTOR shall furnish AUTHORITY **Certificates of Insurance**, which shall include a provision that policy cancellation, non-renewal or reduction of coverage will not be effective until at least **thirty (30) days** after written notice has been given to the AUTHORITY. CONTRACTOR shall include AUTHORITY as an

Additional Insured on the General Liability and Automobile Liability insurance policy required by this Agreement. All of CONTRACTOR'S subcontractors shall be required to include AUTHORITY and CONTRACTOR as **Additional Insureds** on all of their liability insurance policies.

4.4 CONTRACTOR shall ensure that CONTRACTOR's naming of the AUTHORITY as an additional insured on its General Liability and Automobile Liability insurance policies pursuant to this Agreement shall afford coverage for the negligent, reckless, intentionally wrongful or willful acts of CONTRACTOR and other persons employed or utilized by the CONTRACTOR in the performance of this Agreement.

4.5 In the event that subcontractors used by the CONTRACTOR do not have insurance, or do not meet the required insurance limits herein, CONTRACTOR shall indemnify and hold harmless the AUTHORITY for any claim(s) in excess of the subcontractor's insurance coverage.

4.6 The CONTRACTOR shall not commence work under this Agreement until all insurance required as stated herein has been obtained and such insurance has been approved by the AUTHORITY.

ARTICLE 5 - STANDARD OF CARE

5.1 The CONTRACTOR shall exercise the same degree of care, skill, and diligence in the performance of the Services performed pursuant to this Agreement as is ordinarily provided by comparable, qualified professionals under similar circumstances. The CONTRACTOR shall, at no additional cost to AUTHORITY, re-perform services which fail to satisfy the foregoing standard of care.

5.2 The CONTRACTOR warrants that all services shall be performed by skilled and competent personnel to the highest professional standards in the field.

ARTICLE 6 - INDEMNIFICATION

6.1 GENERAL

Having considered the risks and potential liabilities that may exist during the performance of the services and in consideration of the promises included herein, AUTHORITY and CONTRACTOR agree to allocate such liabilities in accordance with this Article 6.

6.2 INDEMNIFICATION

The CONTRACTOR shall indemnify and hold harmless the AUTHORITY, and its officers and employees, from all liabilities, damages, losses, and costs, including, but not limited to, reasonable attorney's fees, to the extent caused by the negligence, recklessness, or intentionally wrongful conduct of the CONTRACTOR and other persons employed or utilized by the CONTRACTOR in the performance of the Agreement.

6.3 SURVIVAL

Upon completion of all services, obligations and duties provided for in this Agreement, or in the event of termination of this Agreement for any reason, the terms and conditions of this Article shall survive.

ARTICLE 7 - INDEPENDENT CONTRACTOR

7.1 The CONTRACTOR is, and shall be, in the performance of all work services and activities performed under this Agreement, an Independent Contractor, and not an employee, agent, or servant of the AUTHORITY. All persons engaged in any of the work or services performed pursuant to this Agreement shall at all times, and in all places, be subject to the CONTRACTOR'S sole direction, supervision, and control. The CONTRACTOR shall exercise control over the means and manner in which it and its employees perform the work, and in all respects the CONTRACTOR'S relationship and the relationship of its employees to the AUTHORITY shall be that of an Independent Contractor and not as employees or agents of the AUTHORITY.

7.2 The CONTRACTOR does not have the power or authority to bind the AUTHORITY in any promise, agreement or representation other than specifically provided for in this Agreement.

ARTICLE 8 - AUTHORITY TO CONDUCT BUSINESS

The CONTRACTOR hereby represents and warrants that it has and will continue to maintain all licenses and approvals required to conduct its business and perform all requirements in this Agreement.

ARTICLE 9 - COMPLIANCE WITH LAWS

In performance of the Services, the CONTRACTOR will comply with applicable regulatory requirements including federal, state, special district, and local laws, rules, regulations, orders, codes, criteria, and standards.

ARTICLE 10 - SUB-CONTRACTING

10.1 The AUTHORITY reserves the right, in its sole and unfettered discretion, to accept the use of a subcontractor or to reject the selection of a particular subcontractor under this Agreement.

10.2 If a subcontractor fails to perform or make progress, as required by this Agreement, and it is necessary to replace the subcontractor to complete the work in a timely fashion, the CONTRACTOR shall promptly do so, subject to acceptance of the new subcontractor by the AUTHORITY.

ARTICLE 11 - FEDERAL AND STATE TAXES

The AUTHORITY is exempt from Federal Tax and State Sales and Use Taxes. Upon request, the AUTHORITY will provide an exemption certificate to CONTRACTOR. The CONTRACTOR shall not be exempted from paying sales tax to its suppliers for materials to fulfill contractual obligations with the AUTHORITY, nor shall the CONTRACTOR be authorized to use the AUTHORITY'S Tax Exemption Number in securing such materials.

ARTICLE 12 - AVAILABILITY OF FUNDS

The obligations of the AUTHORITY under this Agreement are subject to the availability of funds lawfully appropriated for its purpose by the Board of the Solid Waste Authority of Palm Beach County.

ARTICLE 13 - AUTHORITY'S RESPONSIBILITIES

AUTHORITY shall be responsible for providing access to all project sites, and providing information on hand required by CONTRACTOR, including existing reports, studies, financial information, and other required data that are available in the files of the AUTHORITY.

ARTICLE 14 - DEFAULT

14.1 The AUTHORITY may, by written notice of default to the CONTRACTOR, terminate the Agreement in whole or in part if the CONTRACTOR: a) fails to satisfactorily perform any provisions of this Agreement; or b) fails to make progress so as to endanger performance under the terms and conditions of this Agreement; or c) repeatedly fails to perform; or d) does not remedy any such failure within a period of ten (10) days (or such period as the Director of Purchasing Services may authorize in writing) after receipt of notice from the Director of Purchasing Services specifying such failure. In the event the AUTHORITY terminates this Agreement in whole or in part because of default of the CONTRACTOR, the AUTHORITY may, in its sole and unfettered discretion, procure goods and/or services similar to those required under this Agreement and the CONTRACTOR shall be liable for any excess costs incurred due to this action.

14.2 If it is determined that the CONTRACTOR was not in default or that the default was excusable (e.g., failure due to causes beyond the control of, or without the fault or negligence of the CONTRACTOR), the rights and obligations of the parties shall be those provided in Article 15 – Termination for Convenience.

ARTICLE 15 – TERMINATION FOR CONVENIENCE

15.1 The Director of Purchasing Services may, whenever the interests of the AUTHORITY so require, terminate this Agreement, in whole or in part, for the convenience of the AUTHORITY. The Director of Purchasing Services shall give five (5) business days prior written Notice of Termination to the CONTRACTOR, specifying the portions of the Agreement to be terminated and when the termination is to become effective. If only portions of the Agreement are terminated, the CONTRACTOR has the right to withdraw, without adverse action by the AUTHORITY, from the entire Agreement.

15.2 Unless directed differently in the Notice of Termination, the CONTRACTOR shall incur no further obligations in connection with the terminated work and shall stop work to the extent specified on the date given in the Notice of Termination. Additionally, unless directed differently, the CONTRACTOR shall terminate outstanding orders and/or subcontracts related to the terminated work.

15.3 Unless the CONTRACTOR is in breach of this Agreement, the CONTRACTOR shall be paid for services rendered to the AUTHORITY'S satisfaction through the date of termination.

ARTICLE 16 - UNCONTROLLABLE FORCES

16.1 Neither the AUTHORITY nor CONTRACTOR shall be considered to be in default of this Agreement if delays in or failure of performance shall be due to Uncontrollable Forces, the effect of which, by the exercise of reasonable diligence, the non-performing party could not avoid. The term "Uncontrollable Forces" shall mean any event which results in the prevention or delay of performance by a party of its obligations under this Agreement and which is beyond the reasonable control of the nonperforming party. It includes, but is not limited to fire, flood, earthquakes, storms, lightning, epidemic, pandemic, war, riot, civil disturbance, sabotage, and governmental actions.

16.2 Neither party shall, however, be excused from performance if nonperformance is due to forces which are preventable, removable, or remediable and which the nonperforming party could have, with the exercise of reasonable diligence, prevented, removed or remedied with reasonable dispatch. The non-performing party shall, within a reasonable time of being prevented or delayed from performance by an uncontrollable force, give written notice to the other party describing the circumstances and uncontrollable forces preventing continued performance of the obligations of this Agreement.

ARTICLE 17 – JURISDICTION, VENUE, WAIVER OF JURY TRIAL AND REMEDIES

This Agreement shall be governed by the laws of the State of Florida. Any and all legal action necessary to enforce the Agreement shall be in a State court of competent jurisdiction located exclusively in Palm Beach County. With the exception of the choice of law and venue provisions contained herein, no remedy conferred upon any party is intended to be exclusive of any other remedy, and each and every such remedy shall be cumulative and shall be in addition to every other remedy given hereunder or now or hereafter existing at law or in equity. No single or partial failure by any party to exercise any right, power, or remedy hereunder, shall preclude that party from exercising that right, power or remedy in the future. **THE AUTHORITY AND CONSULTANT FREELY AND VOLUNTARILY AGREE TO WAIVE ITS RESPECTIVE RIGHT TO A JURY TRIAL ON ANY ISSUE(S) SO TRIABLE.**

ARTICLE 18 – COMMERCIAL NON-DISCRIMINATION POLICY

As a condition of entering into this Agreement, the CONTRACTOR represents and warrants that it will comply with the AUTHORITY's Commercial Non-Discrimination Policy, as described in Section 6.3 of the AUTHORITY's Purchasing Manual, including subsequent amendments thereto, if any. As part of such compliance, the CONTRACTOR shall not discriminate on the basis of race, color, religion, ancestry or national origin, gender, age, marital status, familial status, sexual orientation, gender identity or expression, disability, or genetic information in the solicitation, selection, hiring or commercial treatment of subcontractors, vendors, suppliers, or commercial customers, nor shall the CONTRACTOR retaliate against any person for reporting instances of such discrimination. The CONTRACTOR shall provide equal opportunity for subcontractors, vendors and suppliers to participate in all of its public sector and private sector subcontracting and supply opportunities, provided that nothing contained in this clause shall prohibit or limit otherwise lawful efforts to remedy the effects of marketplace discrimination that have occurred or are occurring in the AUTHORITY's relevant marketplace in Palm Beach County. The CONTRACTOR understands and agrees that a material violation of this clause shall be considered a material breach of this Agreement and may result in termination of this Agreement, disqualification or debarment of the CONTRACTOR from participating in AUTHORITY contracts, or other sanctions. This clause is not enforceable by or for the benefit of, and creates no obligation to, any third party. The CONTRACTOR agrees and understands that the provisions of Section 6.3 of the AUTHORITY's Purchasing Manual are incorporated herein by reference and that the CONTRACTOR is familiar with the contents of same.

ARTICLE 19 - WAIVER

A waiver by either AUTHORITY or CONTRACTOR of any breach of this Agreement shall not be binding upon the waiving party unless such waiver is in writing. In the event of a written waiver, such a waiver shall not affect the waiving party's rights with respect to any other or further breach. The making or acceptance of a payment by either party with knowledge of the existence of a default or breach shall not operate or be construed to operate as a waiver of any subsequent default or breach.

ARTICLE 20 - SEVERABILITY

20.1 The invalidity, illegality, or unenforceability of any provision of this Agreement, or the occurrence of any event rendering any portion or provision of this Agreement void, shall in no way affect the validity or enforceability of any other portion or provision of the Agreement. Any void provision shall be deemed severed from the Agreement and the balance of the Agreement shall be construed and enforced as if the Agreement did not contain the particular portion or provision held to be void. The parties further agree to reform the Agreement to replace any stricken provision with a valid provision that comes as close as possible to the intent of the stricken provision.

20.2 The provisions of this section shall not prevent the entire Agreement from being void if a provision which is of the essence of the Agreement is determined to be void.

ARTICLE 21 - ENTIRETY OF AGREEMENT AND MODIFICATION

The AUTHORITY and the CONTRACTOR agree that this Agreement, including Exhibits, and matters incorporated by specific reference set forth the entire agreement between the parties, and that there are no promises or understandings other than those stated herein. This Agreement supersedes all prior agreements, contracts, proposals, representations, negotiations, letters or other communications between the AUTHORITY and CONTRACTOR pertaining to the services, whether written or oral. None of the provisions or terms and conditions contained in this Agreement may be added to, amended, modified, superseded or otherwise altered except by written instrument executed by the parties thereto.

ARTICLE 22 - SUCCESSORS AND ASSIGNS

AUTHORITY and CONTRACTOR each binds itself and its partners, successors, executors, administrators, assigns and legal representatives to the other party and its partners, successors, executors, administrators, assigns and legal representative. CONTRACTOR shall not assign this Agreement without the prior express written approval of the AUTHORITY in its sole discretion via executed amendment.

ARTICLE 23 - CONTINGENT FEES

The CONTRACTOR warrants that it has not employed or retained any company or person, other than a bona fide employee working solely for the CONTRACTOR to solicit or secure this Agreement and that it has not paid or agreed to pay any person, company, corporation, individual or firm, other than a bona fide employee working solely for the CONTRACTOR, any fee, commission, percentage, gift or any other consideration contingent upon or resulting from the award or making of this Agreement.

ARTICLE 24 - TRUTH-IN-NEGOTIATION CERTIFICATE

24.1 Execution of this Agreement by the CONTRACTOR shall act as the execution of a truth-in-negotiation certificate certifying that the wage rates and costs used to determine the compensation provided for in this Agreement are accurate, complete, and current as of the Effective Date of the Agreement.

24.2 The said rates and costs shall be adjusted to exclude any significant sums should the AUTHORITY determine that the rates and costs were increased due to inaccurate, incomplete or noncurrent wage rates or due to inaccurate representations of fees paid to outside consultants. The AUTHORITY shall exercise its rights under this 'Certificate" within one (1) year following payment.

ARTICLE 25 - OWNERSHIP OF DOCUMENTS

CONTRACTOR shall be required to cooperate with other consultants relative to providing information requested in a timely manner and in the specified form. Any and all documents, records, disks, original drawings, or other information shall become the property of the AUTHORITY for its use and/or distribution as may be deemed appropriate by the AUTHORITY in its sole and unfettered discretion.

ARTICLE 26 - PUBLIC RECORDS, ACCESS AND AUDITS

26.1 It is the intent of this Article to maintain compliance with the Florida Public Records Law, Ch. 119, Florida Statutes, as amended.

26.2 **DESIGNATED RECORDS CUSTODIAN CONTACT INFORMATION:**

IF THE CONTRACTOR HAS QUESTIONS REGARDING THE APPLICATION OF CHAPTER 119, FLORIDA STATUTES, THE CONTRACTOR'S DUTY TO PROVIDE PUBLIC RECORDS RELATING TO THIS AGREEMENT, CONTACT THE CUSTODIAN OF PUBLIC RECORDS AT:
RECORDS MANAGER
SOLID WASTE AUTHORITY OF PALM BEACH COUNTY
7501 NORTH JOG ROAD
WEST PALM BEACH, FL 33412
561-640-4000 EXT. 4606
RECORDSCUSTODIAN@SWA.ORG

26.3 The CONTRACTOR shall maintain records related to all charges, expenses, and costs incurred in estimating and performing the work, in accordance with the timeframes and classifications for records retention as per the General Records Schedule GS1-SL for State and Local Government Agencies (see: https://dos.myflorida.com/library-archives/records-management/general-records-schedules/) after completion or termination of this Contract. Upon AUTHORITY'S request, CONTRACTOR shall provide AUTHORITY with access to such records during normal business hours at a location within Palm Beach County for purposes of inspection or audit.

26.4 Notwithstanding anything herein to the contrary, the CONTRACTOR expressly acknowledges that: i) it is providing a specific service to the AUTHORITY in the performance of this Contract; ii) acting on behalf of the AUTHORITY in the performance of this Contract; iii) that it has read and is familiar with the Florida Public Records Law, Ch. 119, Florida Statutes, as amended, and both understand its responsibility and obligation to comply with this law; and iv) to the extent any question(s) arise regarding its duties to produce public records, it shall contact the Records Manager with same.

26.5 Any public records requests directed to, or related in any way to this contract shall be directed solely to the Records Manager. If the requested records are not in the possession of the Records Manager, they shall immediately notify the CONTRACTOR and the CONTRACTOR must provide the records or allow access to the records within a reasonable time. A CONTRACTOR who fails to provide the records to the public agency within a reasonable time may be subject to penalties under Florida Statutes (F.S) §119.10, and §119.10(2) provides that a person who willfully and knowingly violates the Public Records Act commits a misdemeanor of the first degree, which is punishable by up to a year in jail and a fine not to exceed $1,000.

26.6 Therefore, the CONTRACTOR is required to:

1) Keep and maintain public records that ordinarily and necessarily would be required by the AUTHORITY in order to perform the service;

2) Upon AUTHORITY's request from the AUTHORITY's Records Manager; provide the AUTHORITY with a copy of the requested records to allow the records to be inspected or copied within a reasonable time on the same terms and conditions that the AUTHORITY would provide the records at a cost that does not exceed the cost provided by Florida law;

3) Ensure that public records that are exempt or confidential and exempt from public records disclosure requirements are not disclosed except as authorized by law for the duration of the Agreement term and following the completion of the Agreement if the CONTRACTOR does not transfer the records to the AUTHORITY; and

4) Upon completion of the Agreement, transfer at no cost to the AUTHORITY, all public records in possession of the CONTRACTOR or keep and maintain public records to the AUTHORITY upon completion or termination of the Agreement; the CONTRACTOR shall destroy any duplicate public records that are exempt or confidential and exempt from public records disclosure requirements. If the CONTRACTOR keeps and maintains public records upon completion of the Agreement, the CONTRACTOR shall meet all applicable requirements for retaining public records. All records stored electronically must be provided to the AUTHORITY, upon request from the AUTHORITY's Records Manager, either during performance of the Agreement or after termination or completion of the Agreement in a format that is compatible with the information technology systems of the AUTHORITY.

26.7 Failure of the CONTRACTOR to comply with these requirements shall be a material breach of this Contract.

26.8 CONTRACTOR shall maintain financial and program records to justify all charges and costs incurred in performing the work for at least three (3) years following final payment by the AUTHORITY as Federal Emergency Management Agency (FEMA) sub-grantee as required by 2 CFR 200.333. The AUTHORITY shall have access to such books, records, and documents as required in this section for the purpose of inspection or audit.

26.9 In the event records retention requirements in Florida Statutes Chapter 119 and 257 exceed those of FEMA, the records shall be retained to comply with the State of Florida requirements.

ARTICLE 27 - INSPECTOR GENERAL

Palm Beach County has established the Office of the Inspector General (OIG), Ordinance No. 2009-049 which is authorized and empowered to review past, present and proposed county contracts, transactions, accounts and records. The AUTHORITY has entered into an Interlocal Agreement (ILA) for Inspector General Services. This agreement provides for the Inspector General to provide services to the AUTHORITY in accordance with the authority, functions and powers set out in the Palm Beach County Office of Inspector General Ordinance. All parties doing business with the AUTHORITY and receiving AUTHORITY funds shall fully cooperate with the Inspector General including providing access to records relating to this agreement. The Inspector General has the power to subpoena witnesses, administer oaths, require the production of records, and audit, investigate, monitor, and inspect the activities of the CONTRACTOR, its officers, agents, employees, and lobbyists in order to ensure compliance with contract specifications and detect corruption and fraud. Failure to cooperate with the Inspector General or interference or impeding any investigation shall be in violation of Ordinance 2009-049, and punished pursuant to Section 125.69, Florida Statutes, in the same manner as a second-degree misdemeanor.

ARTICLE 28 - NOTICE

Any notice, demand, communication, or request required or permitted hereunder shall be in writing and delivered in person or sent by certified mail, postage prepaid as follows:

AS TO AUTHORITY

Solid Waste Authority of Palm Beach County
7501 North Jog Road
West Palm Beach, Florida 33412

Attention: Executive Director
Office No.: 561-640-4000 Fax No.: 561-640-3400

AS TO CONTRACTOR

(Name of Contractor)
Address #1
Address #2
City/State/Zip Code

Attention: _____, TITLE
Office No.: _____ Fax No.: _____ E-Mail: _____

Notices shall be effective when received at the addresses as specified above. Changes in the respective addresses to which such notice is to be directed may be made from time to time by either party by written notice to the other party.

Facsimile transmission is acceptable notice effective when received, however, facsimile transmissions received (i.e.; printed) after 5:00 p.m. or on weekends or holidays, will be deemed received on the next business day. The original of the notice must additionally be mailed as required herein.

Nothing contained in this Article shall be construed to restrict the transmission of routine communications between representatives of CONTRACTOR and AUTHORITY.

ARTICLE 29 - CONTRACT ADMINISTRATION

Services of CONTRACTOR shall be under the general direction of the **Chief Operations Officer**, or designee, who shall act as the AUTHORITY'S representative during the term of the Agreement.

ARTICLE 30 - KEY PERSONNEL

CONTRACTOR shall notify AUTHORITY in the event of key personnel changes which might affect this Agreement. Notification shall be made within ten (10) days of said changes. AUTHORITY has the right to reject any proposed changes in key personnel. The following personnel shall be considered key personnel:

_____ – Project Manager
Cell No.: XXX-XXX-XXXX E-Mail: _____@_____.com

ARTICLE 31 – EQUAL BUSINESS OPPORTUNITY PROGRAM:

The Governing Board of the AUTHORITY has implemented the Economic Inclusion Policy administered by the Equal Business Opportunity (EBO) Program Office to ensure that all segments of its business population, including, but not limited to local, small, minority, and women-owned businesses, have an equitable opportunity to participate in the AUTHORITY'S procurement process, in accordance with Section 6.1 through 6.4 of the Purchasing Manual. Program tools and solicitation incentives are hereby referred to as the Affirmative Procurement Initiatives (API).

31.1 **Affirmative Procurement Initiative (API):**

The AUTHORITY has NOT applied an Affirmative Procurement Initiative to this Agreement.

ARTICLE 32 - SCRUTINIZED COMPANIES

32.1 As provided in F.S. 287.135, by entering into this Agreement or performing any work in furtherance hereof, the CONTRACTOR certifies that it, its affiliates, suppliers, subcontractors and consultants who will perform hereunder, have not been placed on the Scrutinized Companies With Activities in Sudan List or Scrutinized Companies With Activities in The Iran Petroleum Energy Sector List created pursuant to F.S. 215.473, or is engaged in business operations in Cuba or Syria.

If the AUTHORITY determines, using credible information available to the public, that a false certification has been submitted by CONTRACTOR, this Agreement may be terminated and a civil penalty equal to the greater of $2 million or twice the amount of this Agreement shall be imposed, pursuant to F.S. 287.135. Said certification must also be submitted at the time of renewal of this Agreement.

32.2 As provided in F.S. 287.135, by entering into this Agreement or performing any work in furtherance hereof, this Agreement certifies that it, its affiliates, suppliers, subcontractors, and consultants who will perform hereunder, have not been placed on the Scrutinized Companies that Boycott Israel List, or is engaged in a boycott of Israel, pursuant to F.S. 215.4725.
If the AUTHORITY determines, using credible information available to the public, that a false certification has been submitted by CONTRACTOR, this may be terminated and a civil penalty equal to the greater of $2 million or twice the amount of this shall be imposed, pursuant to F.S. 287.135. Said certification must also be submitted at the time of renewal of this Agreement.

ARTICLE 33 - AGREEMENTS WITH OTHER GOVERNMENTAL ENTITIES

33.1 The CONTRACTOR agrees that this Agreement constitutes an offer to all State and local government agencies of the State of Florida under the same terms and conditions, for the same prices and for the same effective period as specified in this Agreement should the CONTRACTOR deem it in the best interest of their business to do so.

33.2 The Agreement in no way restricts or interferes with any State or local government agencies of the State of Florida from re-solicitation.

ARTICLE 34 – THIRD PARTY BENEFICIARY DISCLAIMER

It is not the intention of these documents to create third party beneficiary status in any person or entity that is not a direct party to this Agreement, and no language in this Agreement should be construed or interpreted as creating a third party beneficiary**.**

ARTICLE 35 – E-VERIFY – EMPLOYMENT ELIGIBILITY

35.1 The CONTRACTOR certifies, warrants and represents that it is in compliance with Section 448.095, Florida Statutes, as may be amended and that CONTRACTOR shall: (1) register with and use the E-Verify System (E-Verify.gov) to electronically verify the employment eligibility of all newly hired workers; and (2) has verified that all of the CONTRACTOR'S subcontractors performing the duties and obligations of this Agreement are registered with and use the E-Verify System to electronically verify the employment eligibility of all newly hired workers. CONTRACTOR shall obtain from each of its subcontractors an affidavit stating that the subcontractor does not employ, contract with, or subcontract with an Unauthorized Alien, as that term is defined in Section 448.095(1)(k), Florida Statutes, as may be amended. CONTRACTOR shall maintain a copy of any such affidavit from a subcontractor for, at a minimum, the duration of the subcontract and any extension thereof. This provision shall not supersede any provision of this Agreement which requires a longer retention period.

35.2 AUTHORITY shall terminate this Agreement if it has a good faith belief that CONTRACTOR has knowingly violated Section 448.09(1), Florida Statutes, as may be amended. If AUTHORITY has a good faith belief that one of CONTRACTOR'S subcontractor(s) has knowingly violated Section 448.09(1), Florida Statutes, as may be amended, AUTHORITY shall notify CONTRACTOR to terminate its contract with the subcontractor and CONTRACTOR shall immediately terminate its contract with the subcontractor. If AUTHORITY terminates this Agreement pursuant to the above, CONTRACTOR shall be barred from being awarded a future contract by AUTHORITY for a period of one (1) year from the date on which the Agreement was terminated. In the event of such contract termination, CONTRACTOR shall also be liable for any additional costs incurred by AUTHORITY as a result of the termination.

ARTICLE 36 – CONFIDENTIALITY

No reports, information, computer programs, documentation, and/or data given to, or prepared or assembled by the CONTRACTOR under this Agreement shall be made available to any individual or organization by the CONTRACTOR without prior written approval of the AUTHORITY.

REMAINDER OF PAGE LEFT BLANK INTENTIONALLY

ARTICLE 37 – PAYMENT ADJUSTMENT SCHEDULE

37.1 The AUTHORITY acknowledges the fluctuating nature of prices.

37.2 Annual Non-Fuel: The Non-Fuel Adjustment shall be applied to those rates subject to adjustment and as provided within this Agreement. For the purpose of this Agreement, the Non-Fuel component is assumed to represent 90% of the CONTRACTOR's costs. Therefore, 90% of the approved rates shall be so adjusted:

The rates shall be adjusted as follows:

The rates shall be adjusted annually, commencing on the first anniversary date, by the change in the Water and Sewer and Trash Collection Services Index, Series ID CUSR0000SEHG, as published by the United States Department of Labor, Bureau of Labor Statistics (www.bls.gov). The change in the index shall be calculated by dividing the average of the index over the twelve-month period ending the December preceding the effective date of the adjustment (January – December 2022) by the average of the index over the twelve-month period from January 2021 through December 2021. The first Annual Non-Fuel adjustment shall be effective May 7, 2023 to May 6, 2024.

For example:

For the Contract year beginning May 7, 2023, the average of the index over the twelve-month period from January 2022 through December 2022 shall be divided by the average of the index over the twelve-month period from January 2021 through December 2021, multiplying the result by ninety (90) percent of the contract or AUTHORITY established price, and subtracting ninety (90) percent of the contract or AUTHORITY established price.

The surcharge/credit shall be rounded to the nearest cent.

Formula:

Most Recent Year Average / Prior Year Average x .90 x Rate – (.90 x Rate) = Annual Adjustment

Calendar:

Annual Payment Adjustment Calendar

April 2023	April 2024

Extension Clause Annual Payment Adjustment Schedule

April 2025	April 2026	April 2027

37.3 **Activation Fuel Adjustment (Fuel Surcharge/Credit)**

The rates subject to adjustment shall be subject to a fuel price surcharge/credit for fluctuations in the price of fuel. For the purpose of this Agreement, fuel is assumed to represent 10% of the Contractor's costs therefore 10% of the approved rates shall be so adjusted. Fuel adjustment shall be calculated and effective upon activation.

The rates shall be adjusted as follows:

For the rates subject to adjustment, a fuel surcharge/credit shall be charged/credited basis based on the

percentage change in the average price of fuel as published by the Oil Price Information Service (OPIS) and measured by the OPIS Standard Rack, OPIS No. 2 Distillate Gross Prices, Unbranded Average for Miami, Florida between the month of **January 2022 (Base)** and the most recent month available upon activation.

Fuel Adjustment does not use a floor or ceiling and provides adjustments in either direction without limit.

The surcharge/credit shall be rounded to the nearest cent.

Formula:

Most recent OPIS (at activation) / Base x .10 x Rate – (.10 x Rate) = Fuel Adjustment (for duration of activation)

For example:

Should activation occur October 2023, the fuel surcharge/credit shall be calculated by dividing the reported unbranded average price for September 2023 by the Base (unbranded average price for January 2022), multiplying the result by ten (10) percent of the contract or Authority established price, and subtracting ten (10) percent of the contract or Authority established price.

37.4 In the event that either of these indices is no longer available, the parties shall mutually agree to a replacement index. The value of the adjustment will be determined by the AUTHORITY.

ARTICLE 38 – ORDER OF AGREEMENT ACTIVATION/LOCATION ASSIGNMENT

The CONTRACTOR has entered into a contingent Agreement with the AUTHORITY for Hurricane/Disaster Debris Removal, Reduction, and Disposal. The Agreement awarded will be activated on an as-needed basis as solely determined by the AUTHORITY. The AUTHORITY intends to activate the CONTRACTOR in the order of the Selection Committee ranking, as best meets the needs of the AUTHORITY. The AUTHORITY reserves the sole and unfettered right to assign/reassign any or all CONTRACTORS at any time as may be deemed appropriate depending upon the circumstance(s), the event, or any other condition which may warrant such action.

ARTICLE 39 – TASK ORDER/PERFORMANCE

Task Orders shall be executed bilaterally, and the scope of services and format of Task Orders shall be mutually agreed to by the CONTRACTOR and AUTHORITY. Performance will be measured by the metrics established in each Task Order. After 1/3 and again after 2/3 of the stipulated number of days of work in the Task Order have elapsed, the CONTRACTOR(S) shall provide a written progress report to the AUTHORITY for review and acceptance. The AUTHORITY shall have the right to correct for CONTRACTOR default or underperformance by any means it deems in its best interest. CONTRACTOR will be required to provide a daily report of quantity of work performed under each Task Order. The daily report shall be submitted by 11:00 a.m. or earlier the following morning.

ARTICLE 40 – BONDS

CONTRACTOR shall maintain a Proposal Bond in the sum of $500,000. The CONTRACTOR's Proposal Bond will be returned to the CONTRACTOR in exchange for and acceptance of an appropriate size bond as determined by the AUTHORITY after assessment of damage and definition of the CONTRACTOR's scope of service. In case of hurricane caused damage, a Category 1 storm would require a $2,000,000 Bond, a Category II would require a $4,000,000 Bond, a Category III would require a $6,000,000 Bond, a Category IV would require an $8,000,000 Bond, and a Category V would require a $10,000,000 Bond. The Bond required would be a Performance and Payment Bond, Attachment H. The cost of the Bond is included in the unit rates in the Fee Schedule, Exhibit B. The CONTRACTOR shall maintain the Proposal Bond in effect until the Performance and Payment Bond is submitted to and accepted by the AUTHORITY. If the CONTRACTOR fails to supply a Performance and Payment Bond, the AUTHORITY shall be entitled to retain the Proposal Bond to rectify the CONTRACTOR's unacceptable performance. Pending successful annual CONTRACTOR recertification, the Proposal Bond shall be in effect for the entire term of the Agreement, except for period(s) of time

when a Performance and Payment Bond is in effect.

ARTICLE 41 – FLORIDA HIGHWAY ADMINISTRATION (FHWA) FORM 1273

41.1 This Agreement incorporates all of the provisions set forth in the document commonly known as FHWA Form 1273, Attachment F, which is attached hereto and incorporated by reference as part of this Agreement. The term "contractor" as used in Attachment F shall apply to and mean the CONTRACTOR who may be referred to in Attachment F as the "prime contractor", "bidder", "proposer", "prospective primary participant", "prospective participant", "participant" or the like. The CONTRACTOR will perform the duties and obligations of the other contracting party regardless of the description or label used in Form 1273, Attachment F.

41.2 The CONTRACTOR shall comply with the Davis-Bacon wages rates to the extent applicable to the work performed under this Agreement. The provisions of the Davis-Bacon Act do not apply to debris removal work unless such work is done in conjunction with a construction project or "linked" to a particular Federal Highway. Wage rate tables may be found at http://www.dot.state.fl.us/construction/wage.shtm. Said wage rate tables are incorporated into and made part of this Agreement by reference.

ARTICLE 42 – BUY AMERICA REQUIREMENTS

The CONTRACTOR agrees to comply with the requirements of the Federal Buy America law (See 23 U.S.C. 313, ISTEA Sections 1041(a) and 1048(a), as they may be amended from time to time) as they relate to Federal-aid contracts and the use of steel and iron produced in the United States. A description of the requirements of Buy America is set forth in Attachment G, which is attached hereto and incorporated by reference as part of this Agreement. CONTRACTOR shall provide a certification statement regarding the origin of all materials or products covered under the Buy America provisions and used in its performance of the Agreement in accordance with the requirements of law and the AUTHORITY, FDOT, and FEMA, to the extent applicable.

ARTICLE 43 – DISADVANTAGED BUSINESS ENTERPRISES

43.1 This provision shall supplement Article 31 "Equal Business Opportunity Program" of the Agreement. The Agreement is subject to the requirements of 49 CFR Part 26. The CONTRACTOR shall not discriminate on the basis of race, color, national origin, or sex in the performance of the Agreement. The CONTRACTOR shall carry out the applicable requirements of 49 CFR Part 26 in the award and administration of this U.S. DOT-assisted contract. Failure by the CONTRACTOR to carry out these requirements is a material breach of Agreement, which may result in the termination of this Agreement or such other remedy as the AUTHORITY deems appropriate, including but not limited to the withholding of payments. Each subcontract the CONTRACTOR signs with a subcontractor must include the assurance in this paragraph. (See 49 CFR 26.13). Upon request, the CONTRACTOR will provide the AUTHORITY with a copy of each subcontract it enters into.

43.2 The CONTRACTOR is required to pay its subcontractors performing work related to this Agreement for satisfactory performance of that work no later than thirty (30) days after the CONTRACTOR's receipt of payment for that work from the AUTHORITY. The CONTRACTOR may not hold any retainage from its subcontractors unless pursuant to an agreement approved by the AUTHORITY. The CONTRACTOR shall return all retainage payments withheld within thirty (30) days after the subcontractor's work has been satisfactorily completed.

43.3 The CONTRACTOR shall, on a monthly basis, submit payment certifications, including a certification regarding their truth and accuracy, for all payments it is seeking and certifications from all subcontractors indicating who has been paid and how. The certifications shall comply with all Federal and State requirements regarding the reporting of DBE participation. The CONTRACTOR shall, if required by the AUTHORITY or FDOT, report its DBE participation monthly on the Equal Opportunity Reporting System located on the Florida Department of Transportation's (FDOT) website found at www.bipincwebapps.com/bizwebflorida/. Audits

may be conducted to review payments to DBE subcontractors. The CONTRACTOR will fully cooperate with the AUTHORITY, FDOT, or FEMA regarding the monitoring of subcontractors and payments made thereto.

ARTICLE 44 – CERTIFICATION REGARDING SUSPENSION AND DEBARMENT

44.1 This Agreement is a covered transaction for purposes of 49 CFR Part 29. Accordingly, the CONTRACTOR shall verify that neither the CONTRACTOR, nor its principals, as defined at 49 CFR 29.995, or affiliates, as defined at 49 CFR 29.905, are excluded or disqualified from participation in this Agreement as defined at 49 CFR 29.940 and 29.945.

44.2 The CONTRACTOR agrees to comply with the requirements of 49 CFR 29, Subpart C throughout the term of this Agreement. The CONTRACTOR must include the requirement to comply with 49 CFR 29, Subpart C in any lower tier covered transaction it enters into. CONTRACTOR's certification is a material representation of fact relied upon by the AUTHORITY. If it is later determined that the CONTRACTOR knowingly rendered an erroneous certification, in addition to remedies available to the AUTHORITY, the State or Federal government may pursue any available remedies, including but not limited to suspension and/or debarment. The CONTRACTOR further agrees that it will include a provision requiring such compliance in all of its subcontracts or lower tier covered transactions.

ARTICLE 45 – ACCESS TO RECORDS AND THEIR RETENTION

45.1 This provision shall supplement Article 26 of this Agreement. The CONTRACTOR shall maintain adequate records to justify all charges, expenses, and costs incurred in estimating and performing the Agreement for at least five (5) years after completion or termination of this Agreement or FDOT's closure of an "emergency event" with the Florida Division of Emergency Management, whichever comes last, except in the event of litigation or settlement of claims arising from the performance of the Agreement, the CONTRACTOR agrees to maintain said records until all litigation, claims, appeals or exceptions related thereto have been resolved. The records shall be maintained at a location in Palm Beach County, Florida or such other location in Florida approved by the AUTHORITY.

45.2 The CONTRACTOR shall make all of its books, records, and other documents related, in any manner to its or its subcontractors' performance of the Agreement, available to the AUTHORITY and any other funding entity (e.g. FDOT, FEMA, the Comptroller General of the U.S. or any of their authorized representatives) for the purpose of examination, audit, reproduction, excerpts and transcripts, during normal business hours, at the CONTRACTOR's place of business or if CONTRACTOR's place of business is not located in Palm Beach County, then at the location for maintenance of records referenced above. The CONTRACTOR shall also require its subcontractors to make their books, records and documents available for examination, audit, reproduction, excerpts, and transcripts, for the same duration and in the same manner, and at or near the same locations required herein of CONTRACTOR.

ARTICLE 46 – AUDIT REQUIREMENTS

This provision shall supplement Article 26 of this Agreement. The CONTRACTOR agrees that audits may be undertaken of its records related to its performance of the Agreement as may be authorized or required under OMB Circular A-133, as revised. The CONTRACTOR agrees that it will comply and fully cooperate with the AUTHORITY and any State and/or Federal funding agency(ies), including but not limited to FDOT, Florida's Auditor General, FEMA, or any of their authorized representatives, in any audit or monitoring procedures or processes any such entity(ies) may undertake related to CONTRACTOR's performance of the Agreement.

ARTICLE 47 – NATIONAL ENVIRONMENTAL POLICY ACT (NEPA)

The CONTRACTOR shall cooperate with the AUTHORITY, FDOT, and FEMA so as to assure that all activities related to the performance of this Agreement comply with the requirements of the National NEPA of 1969, as amended, and the regulations and guidance related thereto.

ARTICLE 48 – AMERICANS WITH DISABILITIES ACT

The CONTRACTOR does hereby represent and certify that it will comply with all the requirements of the Americans with Disabilities Act of 1990 (42 USC 12102, et seq.), as it may be amended, and all applicable impending regulations of the U.S. DOT, FEMA, and other Federal-aid agencies.

ARTICLE 49 – COMPLIANCE WITH TITLE VI, TITLE VII, AND OTHER FEDERAL LAWS AND REGULATIONS

The CONTRACTOR does hereby represent and certify that it will comply with all the requirements imposed by Title VI of the Civil Rights Act of 1964 and Title VII of the Civil Rights Act of 1968, as they have been and may be modified from time to time (42 USC 2000d et. Seq. and 3601 et seq.) and the Age Discrimination and Employment Act of 1967 and Section 303 of the Age Discrimination Act of 1975, as amended (42 USC 6102), and all applicable Federal laws and regulations, policies, procedures, and directives of the U.S.DOT, FEMA and/or other Federal-aid agencies, as they may be promulgated and amended from time to time.

ARTICLE 50 – CONVICT LABOR PROHIBITION

The CONTRACTOR does hereby represent and certify that it will comply with the convict labor prohibition in 23 U.S.C. 114, and all implementing regulations thereto.

ARTICLE 51 – CERTIFICATION REGARDING LOBBYING ACTIVITIES

A Bidder or Proposer for an award of certain Federal-Aid contracts in the amount of $100,000 or more, must file the certification required by 49 CFR Part 2. The CONTRACTOR confirms that by signing and submitting a Bid or Proposal for the work covered by this Agreement, it made the certification described in Section X1 of the Attachment F herein.

ARTICLE 52 – DEPARTMENT OF HOMELAND SECURITY (DHS) SEAL, LOGO, AND FLAGS

The CONTRACTOR shall not use the DHS seal(s), logos, crests, or reproductions of flags or likenesses of DHS agency officials without specific FEMA pre-approval.

ARTICLE 53 – NO OBLIGATION BY FEDERAL GOVERNMENT

The Federal Government is not a party to this Agreement and is not subject to any obligations or liabilities to the AUTHORITY, CONTRACTOR, or any other party pertaining to any matter resulting from this Agreement.

ARTICLE 54 – PROGRAM FRAUD AND FALSE OR FRAUDULENT STATEMENTS OR RELATED ACTS

The CONTRACTOR acknowledges that 31 U.S.C Chapter 38 (Administrative Remedies for False Claims and Statements) applies to the CONTRACTOR's actions pertaining to this Agreement.

REMAINDER OF PAGE LEFT BLANK INTENTIONALLY

In Witness Whereof, AUTHORITY, and CONTRACTOR have made and executed this Agreement all as of the day and year first above written.

SOLID WASTE AUTHORITY OF PALM BEACH COUNTY:

WITNESS:

1. _____

2. _____

By: _____
Daniel Pellowitz
Executive Director

(SEAL)

APPROVED AS TO LEGAL SUFFICIENCY:

By: _____
Howard J. Falcon, III
General Counsel

APPROVED AS TO TERMS AND CONDITIONS:

_____
Signature

_____
Print Name

_____
Title

ATTEST:

_____
Corporate Secretary

WITNESS:

1. _____

2. _____

CONTRACTOR:

_____
Authorized Signature

_____
Print Name

_____
Title

_____
Date

(Affix Corporate Seal)

SCOPE OF WORK

EXHIBIT "B"

FEE SCHEDULE

ATTACHMENTS CONTINUED

ATTACHMENT "B"

SOLID WASTE AUTHORITY
OF PALM BEACH COUNTY

7501 North Jog Road
West Palm Beach, Florida 33412
Telephone: 561-640-4000 • Fax: 561-640-3400

TASK ORDER
DISASTER DEBRIS MANAGEMENT

TO_____
Task Order No.

In accordance with _____(Contractor) contract, with the Solid Waste Authority of PBC, Florida, (AUTHORITY) Agreement No._____ for Hurricane/Disaster Debris Removal, Reduction, and Disposal dated _____ the AUTHORITY hereby requests and authorizes the services to be performed on the project as described below:

Project: _____

Specific Work to be performed: _____

Duration of Work (Include Start Date, End Date and Total Calendar Days): _____

Method of Payment: _____

Estimated Cost of this Task Order: $_____

Contractor Signature: _____ Date: _____

AUTHORITY Signature: _____ Date: _____

SWA Use Only					
SWA Requestor/Monitor:				Date:	
SWA Dept. Director:				Date:	
Vendor No.:		Account No.:		Project:	
Purchasing:		Budget:		Accounting:	

ATTACHMENT "C"
PRE-APPROVED TEMPORARY DEBRIS MANAGEMENT SITES MAP

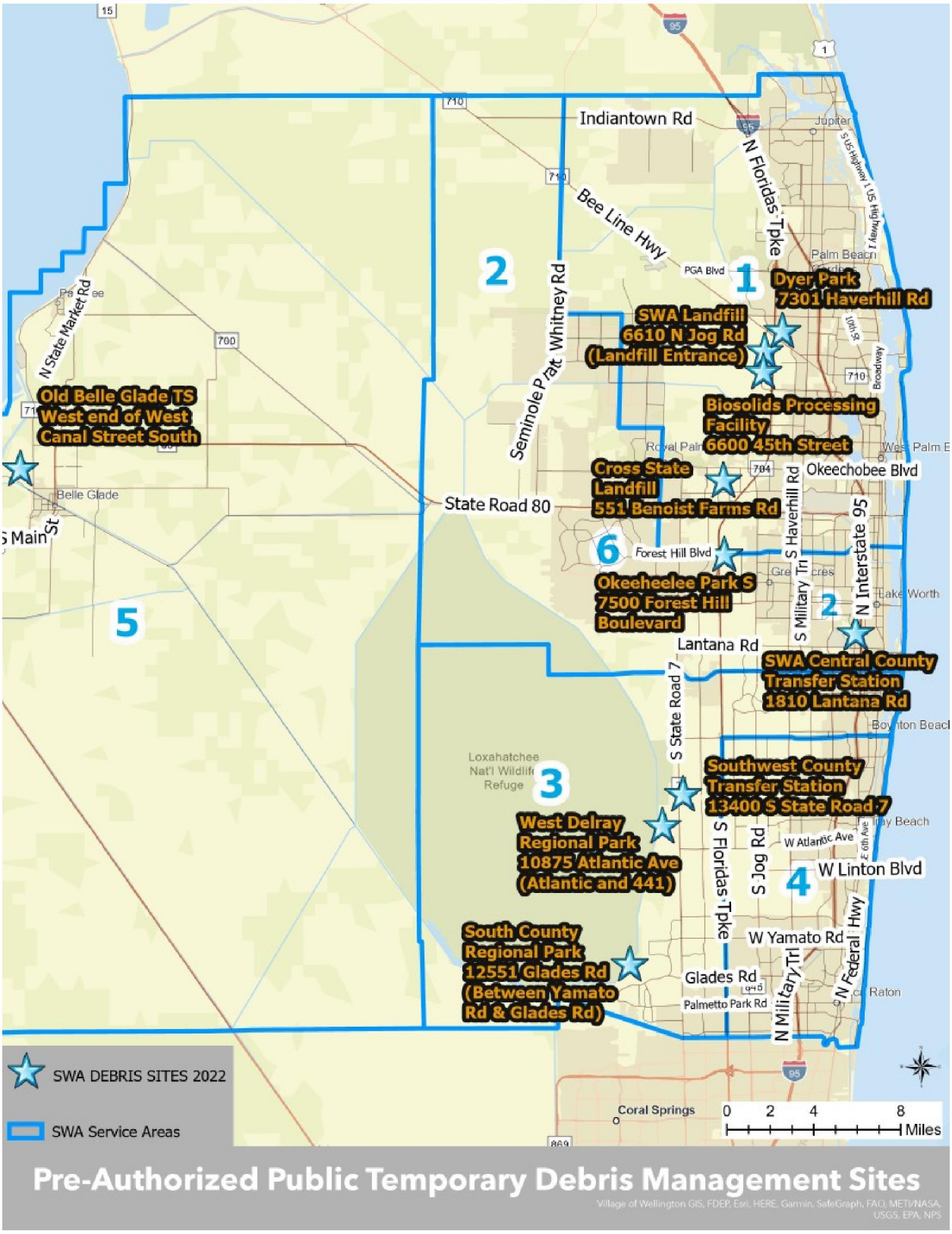

ATTACHMENT "D"

PUBLIC ASSISTANCE PROGRAM AND POLICY GUIDE

The Public Assistance Program and Policy Guide, Version 4, Effective June 1, 2020 (see hyperlink below) is the most recent reference material that will provide additional information:
https://www.fema.gov/sites/default/files/documents/fema_pappg-v4-updated-links_policy_6-1-2020.pdf

PROJECT MANAGEMENT

Project management begins when a disaster occurs and does not end until an applicant has received final payment for the project. Good project management ensures successful recovery from the disaster, expedited payment of funds, and more efficient close-outs of PA Program grants.

Record Keeping

It is critical that the applicant establish and maintain accurate records of events and expenditures related to disaster recovery work. The information required for documentation describes the "who, what, when, where, why, and how much" for each item of disaster recovery work. The applicant should have a financial and record keeping system in place that can be used to track these elements. The importance of maintaining a complete and accurate set of records for each project cannot be over-emphasized. Good documentation facilitates the project formulation, validation, approval, and funding processes.

All of the documentation pertaining to a project should be filed with the corresponding *PW* and maintained by the applicant as the permanent record of the project. These records become the basis for verification of the accuracy of project cost estimates during validation of small projects, reconciliation of costs for large projects, and audits.

Applicants should begin the record keeping process before a disaster is declared by the President. To ensure that work performed both before and after a disaster declaration is well documented, potential applicants should:

- designate a person to coordinate the compilation and filing of records;
- establish a file for each site where work has been or will be performed; and
- maintain accurate disbursement and accounting records to document the work performed and the costs incurred.

The Federal Office of Management and Budget requires grant recipients to maintain financial and program records on file for three years following final payment. Records of grant recipients may be subject to the provisions of the Single Audit Act, as described on page 117 of this guide. Applicants may refer to the Applicant Handbook, FEMA 323, for additional information regarding record-keeping.

ATTACHMENT "E"

MOBILIZATION SCHEDULE

CONTRACTOR shall commence mobilization of equipment, operators, and laborers immediately upon receipt of a Mobilization Task Order to meet the progress pattern set below.

	Category 1 & 2	Category 3	Category 4	Category 5
Within 24 hours	25%	25%	20%	15%
Within 48 hours	30%	30%	30%	25%
Within 72 hours	40%	40%	40%	40%
Within 96 hours	60%	60%	50%	50%
Within 5 days	100%	80%	60%	60%
Within 10 days		100%	80%	70%
Within 14 days			100%	80%
Within 20 days				100%

ATTACHMENT "F"

FHWA-1273

FHWA-1273 – Revised May 1, 2012

REQUIRED CONTRACT PROVISIONS
FEDERAL-AID CONSTRUCTION CONTRACTS

I. General
II. Nondiscrimination
III. Nonsegregated Facilities
IV. Davis-Bacon and Related Act Provisions
V. Contract Work Hours and Safety Standards Act Provisions
VI. Subletting or Assigning the Contract
VII. Safety: Accident Prevention
VIII. False Statements Concerning Highway Projects
IX. Implementation of Clean Air Act and Federal Water Pollution Control Act
X. Compliance with Governmentwide Suspension and Debarment Requirements
XI. Certification Regarding Use of Contract Funds for Lobbying

ATTACHMENTS

A. Employment and Materials Preference for Appalachian Development Highway System or Appalachian Local Access Road Contracts (included in Appalachian contracts only)

I. GENERAL

1. Form FHWA-1273 must be physically incorporated in each construction contract funded under Title 23 (excluding emergency contracts solely intended for debris removal). The contractor (or subcontractor) must insert this form in each subcontract and further require its inclusion in all lower tier subcontracts (excluding purchase orders, rental agreements and other agreements for supplies or services).

The applicable requirements of Form FHWA-1273 are incorporated by reference for work done under any purchase order, rental agreement or agreement for other services. The prime contractor shall be responsible for compliance by any subcontractor, lower-tier subcontractor or service provider.

Form FHWA-1273 must be included in all Federal-aid design-build contracts, in all subcontracts and in lower tier subcontracts (excluding subcontracts for design services, purchase orders, rental agreements and other agreements for supplies or services). The design-builder shall be responsible for compliance by any subcontractor, lower-tier subcontractor or service provider.

Contracting agencies may reference Form FHWA-1273 in bid proposal or request for proposal documents, however, the Form FHWA-1273 must be physically incorporated (not referenced) in all contracts, subcontracts and lower-tier subcontracts (excluding purchase orders, rental agreements and other agreements for supplies or services related to a construction contract).

2. Subject to the applicability criteria noted in the following sections, these contract provisions shall apply to all work performed on the contract by the contractor's own organization and with the assistance of workers under the contractor's immediate superintendence and to all work performed on the contract by piecework, station work, or by subcontract.

3. A breach of any of the stipulations contained in these Required Contract Provisions may be sufficient grounds for withholding of progress payments, withholding of final payment, termination of the contract, suspension / debarment or any other action determined to be appropriate by the contracting agency and FHWA.

4. Selection of Labor: During the performance of this contract, the contractor shall not use convict labor for any purpose within the limits of a construction project on a Federal-aid highway unless it is labor performed by convicts who are on parole, supervised release, or probation. The term Federal-aid highway does not include roadways functionally classified as local roads or rural minor collectors.

II. NONDISCRIMINATION

The provisions of this section related to 23 CFR Part 230 are applicable to all Federal-aid construction contracts and to all related construction subcontracts of $10,000 or more. The provisions of 23 CFR Part 230 are not applicable to material supply, engineering, or architectural service contracts.

In addition, the contractor and all subcontractors must comply with the following policies: Executive Order 11246, 41 CFR 60, 29 CFR 1625-1627, Title 23 USC Section 140, the Rehabilitation Act of 1973, as amended (29 USC 794), Title VI of the Civil Rights Act of 1964, as amended, and related regulations including 49 CFR Parts 21, 26 and 27; and 23 CFR Parts 200, 230, and 633.

The contractor and all subcontractors must comply with: the requirements of the Equal Opportunity Clause in 41 CFR 60-1.4(b) and, for all construction contracts exceeding $10,000, the Standard Federal Equal Employment Opportunity Construction Contract Specifications in 41 CFR 60-4.3.

Note: The U.S. Department of Labor has exclusive authority to determine compliance with Executive Order 11246 and the policies of the Secretary of Labor including 41 CFR 60, and 29 CFR 1625-1627. The contracting agency and the FHWA have the authority and the responsibility to ensure compliance with Title 23 USC Section 140, the Rehabilitation Act of 1973, as amended (29 USC 794), and Title VI of the Civil Rights Act of 1964, as amended, and related regulations including 49 CFR Parts 21, 26 and 27; and 23 CFR Parts 200, 230, and 633.

The following provision is adopted from 23 CFR 230, Appendix A, with appropriate revisions to conform to the U.S. Department of Labor (US DOL) and FHWA requirements.

1. **Equal Employment Opportunity**: Equal employment opportunity (EEO) requirements not to discriminate and to take affirmative action to assure equal opportunity as set forth under laws, executive orders, rules, regulations (28 CFR 35, 29 CFR 1630, 29 CFR 1625-1627, 41 CFR 60 and 49 CFR 27) and orders of the Secretary of Labor as modified by the provisions prescribed herein, and imposed pursuant to 23 U.S.C. 140 shall constitute the EEO and specific affirmative action standards for the contractor's project activities under

this contract. The provisions of the Americans with Disabilities Act of 1990 (42 U.S.C. 12101 et seq.) set forth under 28 CFR 35 and 29 CFR 1630 are incorporated by reference in this contract. In the execution of this contract, the contractor agrees to comply with the following minimum specific requirement activities of EEO:

a. The contractor will work with the contracting agency and the Federal Government to ensure that it has made every good faith effort to provide equal opportunity with respect to all of its terms and conditions of employment and in their review of activities under the contract.

b. The contractor will accept as its operating policy the following statement:

"It is the policy of this Company to assure that applicants are employed, and that employees are treated during employment, without regard to their race, religion, sex, color, national origin, age or disability. Such action shall include: employment, upgrading, demotion, or transfer; recruitment or recruitment advertising; layoff or termination; rates of pay or other forms of compensation; and selection for training, including apprenticeship, pre-apprenticeship, and/or on-the-job training."

2. EEO Officer: The contractor will designate and make known to the contracting officers an EEO Officer who will have the responsibility for and must be capable of effectively administering and promoting an active EEO program and who must be assigned adequate authority and responsibility to do so.

3. Dissemination of Policy: All members of the contractor's staff who are authorized to hire, supervise, promote, and discharge employees, or who recommend such action, or who are substantially involved in such action, will be made fully cognizant of, and will implement, the contractor's EEO policy and contractual responsibilities to provide EEO in each grade and classification of employment. To ensure that the above agreement will be met, the following actions will be taken as a minimum:

a. Periodic meetings of supervisory and personnel office employees will be conducted before the start of work and then not less often than once every six months, at which time the contractor's EEO policy and its implementation will be reviewed and explained. The meetings will be conducted by the EEO Officer.

b. All new supervisory or personnel office employees will be given a thorough indoctrination by the EEO Officer, covering all major aspects of the contractor's EEO obligations within thirty days following their reporting for duty with the contractor.

c. All personnel who are engaged in direct recruitment for the project will be instructed by the EEO Officer in the contractor's procedures for locating and hiring minorities and women.

d. Notices and posters setting forth the contractor's EEO policy will be placed in areas readily accessible to employees, applicants for employment and potential employees.

e. The contractor's EEO policy and the procedures to implement such policy will be brought to the attention of employees by means of meetings, employee handbooks, or other appropriate means.

4. Recruitment: When advertising for employees, the contractor will include in all advertisements for employees the notation: "An Equal Opportunity Employer." All such advertisements will be placed in publications having a large circulation among minorities and women in the area from which the project work force would normally be derived.

a. The contractor will, unless precluded by a valid bargaining agreement, conduct systematic and direct recruitment through public and private employee referral sources likely to yield qualified minorities and women. To meet this requirement, the contractor will identify sources of potential minority group employees, and establish with such identified sources procedures whereby minority and women applicants may be referred to the contractor for employment consideration.

b. In the event the contractor has a valid bargaining agreement providing for exclusive hiring hall referrals, the contractor is expected to observe the provisions of that agreement to the extent that the system meets the contractor's compliance with EEO contract provisions. Where implementation of such an agreement has the effect of discriminating against minorities or women, or obligates the contractor to do the same, such implementation violates Federal nondiscrimination provisions.

c. The contractor will encourage its present employees to refer minorities and women as applicants for employment. Information and procedures with regard to referring such applicants will be discussed with employees.

5. Personnel Actions: Wages, working conditions, and employee benefits shall be established and administered, and personnel actions of every type, including hiring, upgrading, promotion, transfer, demotion, layoff, and termination, shall be taken without regard to race, color, religion, sex, national origin, age or disability. The following procedures shall be followed:

a. The contractor will conduct periodic inspections of project sites to insure that working conditions and employee facilities do not indicate discriminatory treatment of project site personnel.

b. The contractor will periodically evaluate the spread of wages paid within each classification to determine any evidence of discriminatory wage practices.

c. The contractor will periodically review selected personnel actions in depth to determine whether there is evidence of discrimination. Where evidence is found, the contractor will promptly take corrective action. If the review indicates that the discrimination may extend beyond the actions reviewed, such corrective action shall include all affected persons.

d. The contractor will promptly investigate all complaints of alleged discrimination made to the contractor in connection with its obligations under this contract, will attempt to resolve such complaints, and will take appropriate corrective action within a reasonable time. If the investigation indicates that the discrimination may affect persons other than the complainant, such corrective action shall include such other persons. Upon completion of each investigation, the contractor will inform every complainant of all of their avenues of appeal.

6. Training and Promotion:

a. The contractor will assist in locating, qualifying, and increasing the skills of minorities and women who are

applicants for employment or current employees. Such efforts should be aimed at developing full journey level status employees in the type of trade or job classification involved.

b. Consistent with the contractor's work force requirements and as permissible under Federal and State regulations, the contractor shall make full use of training programs, i.e., apprenticeship, and on-the-job training programs for the geographical area of contract performance. In the event a special provision for training is provided under this contract, this subparagraph will be superseded as indicated in the special provision. The contracting agency may reserve training positions for persons who receive welfare assistance in accordance with 23 U.S.C. 140(a).

c. The contractor will advise employees and applicants for employment of available training programs and entrance requirements for each.

d. The contractor will periodically review the training and promotion potential of employees who are minorities and women and will encourage eligible employees to apply for such training and promotion.

7. Unions: If the contractor relies in whole or in part upon unions as a source of employees, the contractor will use good faith efforts to obtain the cooperation of such unions to increase opportunities for minorities and women. Actions by the contractor, either directly or through a contractor's association acting as agent, will include the procedures set forth below:

a. The contractor will use good faith efforts to develop, in cooperation with the unions, joint training programs aimed toward qualifying more minorities and women for membership in the unions and increasing the skills of minorities and women so that they may qualify for higher paying employment.

b. The contractor will use good faith efforts to incorporate an EEO clause into each union agreement to the end that such union will be contractually bound to refer applicants without regard to their race, color, religion, sex, national origin, age or disability.

c. The contractor is to obtain information as to the referral practices and policies of the labor union except that to the extent such information is within the exclusive possession of the labor union and such labor union refuses to furnish such information to the contractor, the contractor shall so certify to the contracting agency and shall set forth what efforts have been made to obtain such information.

d. In the event the union is unable to provide the contractor with a reasonable flow of referrals within the time limit set forth in the collective bargaining agreement, the contractor will, through independent recruitment efforts, fill the employment vacancies without regard to race, color, religion, sex, national origin, age or disability; making full efforts to obtain qualified and/or qualifiable minorities and women. The failure of a union to provide sufficient referrals (even though it is obligated to provide exclusive referrals under the terms of a collective bargaining agreement) does not relieve the contractor from the requirements of this paragraph. In the event the union referral practice prevents the contractor from meeting the obligations pursuant to Executive Order 11246, as amended, and these special provisions, such contractor shall immediately notify the contracting agency.

8. Reasonable Accommodation for Applicants / Employees with Disabilities: The contractor must be familiar with the requirements for and comply with the Americans with Disabilities Act and all rules and regulations established there under. Employers must provide reasonable accommodation in all employment activities unless to do so would cause an undue hardship.

9. Selection of Subcontractors, Procurement of Materials and Leasing of Equipment: The contractor shall not discriminate on the grounds of race, color, religion, sex, national origin, age or disability in the selection and retention of subcontractors, including procurement of materials and leases of equipment. The contractor shall take all necessary and reasonable steps to ensure nondiscrimination in the administration of this contract.

a. The contractor shall notify all potential subcontractors and suppliers and lessors of their EEO obligations under this contract.

b. The contractor will use good faith efforts to ensure subcontractor compliance with their EEO obligations.

10. Assurance Required by 49 CFR 26.13(b):

a. The requirements of 49 CFR Part 26 and the State DOT's U.S. DOT-approved DBE program are incorporated by reference.

b. The contractor or subcontractor shall not discriminate on the basis of race, color, national origin, or sex in the performance of this contract. The contractor shall carry out applicable requirements of 49 CFR Part 26 in the award and administration of DOT-assisted contracts. Failure by the contractor to carry out these requirements is a material breach of this contract, which may result in the termination of this contract or such other remedy as the contracting agency deems appropriate.

11. Records and Reports: The contractor shall keep such records as necessary to document compliance with the EEO requirements. Such records shall be retained for a period of three years following the date of the final payment to the contractor for all contract work and shall be available at reasonable times and places for inspection by authorized representatives of the contracting agency and the FHWA.

a. The records kept by the contractor shall document the following:

(1) The number and work hours of minority and non-minority group members and women employed in each work classification on the project;

(2) The progress and efforts being made in cooperation with unions, when applicable, to increase employment opportunities for minorities and women; and

(3) The progress and efforts being made in locating, hiring, training, qualifying, and upgrading minorities and women;

b. The contractors and subcontractors will submit an annual report to the contracting agency each July for the duration of the project, indicating the number of minority, women, and non-minority group employees currently engaged in each work classification required by the contract work. This information is to be reported on Form FHWA-1391. The staffing data should represent the project work force on board in all or any part of the last payroll period preceding the end of July. If on-the-job training is being required by special provision, the contractor

will be required to collect and report training data. The employment data should reflect the work force on board during all or any part of the last payroll period preceding the end of July.

III. NONSEGREGATED FACILITIES

This provision is applicable to all Federal-aid construction contracts and to all related construction subcontracts of $10,000 or more.

The contractor must ensure that facilities provided for employees are provided in such a manner that segregation on the basis of race, color, religion, sex, or national origin cannot result. The contractor may neither require such segregated use by written or oral policies nor tolerate such use by employee custom. The contractor's obligation extends further to ensure that its employees are not assigned to perform their services at any location, under the contractor's control, where the facilities are segregated. The term "facilities" includes waiting rooms, work areas, restaurants and other eating areas, time clocks, restrooms, washrooms, locker rooms, and other storage or dressing areas, parking lots, drinking fountains, recreation or entertainment areas, transportation, and housing provided for employees. The contractor shall provide separate or single-user restrooms and necessary dressing or sleeping areas to assure privacy between sexes.

IV. DAVIS-BACON AND RELATED ACT PROVISIONS

This section is applicable to all Federal-aid construction projects exceeding $2,000 and to all related subcontracts and lower-tier subcontracts (regardless of subcontract size). The requirements apply to all projects located within the right-of-way of a roadway that is functionally classified as Federal-aid highway. This excludes roadways functionally classified as local roads or rural minor collectors, which are exempt. Contracting agencies may elect to apply these requirements to other projects.

The following provisions are from the U.S. Department of Labor regulations in 29 CFR 5.5 "Contract provisions and related matters" with minor revisions to conform to the FHWA-1273 format and FHWA program requirements.

1. Minimum wages

a. All laborers and mechanics employed or working upon the site of the work, will be paid unconditionally and not less often than once a week, and without subsequent deduction or rebate on any account (except such payroll deductions as are permitted by regulations issued by the Secretary of Labor under the Copeland Act (29 CFR part 3)), the full amount of wages and bona fide fringe benefits (or cash equivalents thereof) due at time of payment computed at rates not less than those contained in the wage determination of the Secretary of Labor which is attached hereto and made a part hereof, regardless of any contractual relationship which may be alleged to exist between the contractor and such laborers and mechanics.

Contributions made or costs reasonably anticipated for bona fide fringe benefits under section 1(b)(2) of the Davis-Bacon Act on behalf of laborers or mechanics are considered wages paid to such laborers or mechanics, subject to the provisions of paragraph 1.d. of this section; also, regular contributions made or costs incurred for more than a weekly period (but not less often than quarterly) under plans, funds, or programs which cover the particular weekly period, are deemed to be constructively made or incurred during such weekly period. Such laborers and mechanics shall be paid the appropriate wage rate and fringe benefits on the wage determination for the classification of work actually performed, without regard to skill, except as provided in 29 CFR 5.5(a)(4). Laborers or mechanics performing work in more than one classification may be compensated at the rate specified for each classification for the time actually worked therein: Provided, That the employer's payroll records accurately set forth the time spent in each classification in which work is performed. The wage determination (including any additional classification and wage rates conformed under paragraph 1.b. of this section) and the Davis-Bacon poster (WH–1321) shall be posted at all times by the contractor and its subcontractors at the site of the work in a prominent and accessible place where it can be easily seen by the workers.

b.(1) The contracting officer shall require that any class of laborers or mechanics, including helpers, which is not listed in the wage determination and which is to be employed under the contract shall be classified in conformance with the wage determination. The contracting officer shall approve an additional classification and wage rate and fringe benefits therefore only when the following criteria have been met:

(i) The work to be performed by the classification requested is not performed by a classification in the wage determination; and

(ii) The classification is utilized in the area by the construction industry; and

(iii) The proposed wage rate, including any bona fide fringe benefits, bears a reasonable relationship to the wage rates contained in the wage determination.

(2) If the contractor and the laborers and mechanics to be employed in the classification (if known), or their representatives, and the contracting officer agree on the classification and wage rate (including the amount designated for fringe benefits where appropriate), a report of the action taken shall be sent by the contracting officer to the Administrator of the Wage and Hour Division, Employment Standards Administration, U.S. Department of Labor, Washington, DC 20210. The Administrator, or an authorized representative, will approve, modify, or disapprove every additional classification action within 30 days of receipt and so advise the contracting officer or will notify the contracting officer within the 30-day period that additional time is necessary.

(3) In the event the contractor, the laborers or mechanics to be employed in the classification or their representatives, and the contracting officer do not agree on the proposed classification and wage rate (including the amount designated for fringe benefits, where appropriate), the contracting officer shall refer the questions, including the views of all interested parties and the recommendation of the contracting officer, to the Wage and Hour Administrator for determination. The Wage and Hour Administrator, or an authorized representative, will issue a determination within 30 days of receipt and so advise the contracting officer or

will notify the contracting officer within the 30-day period that additional time is necessary.

(4) The wage rate (including fringe benefits where appropriate) determined pursuant to paragraphs 1.b.(2) or 1.b.(3) of this section, shall be paid to all workers performing work in the classification under this contract from the first day on which work is performed in the classification.

c. Whenever the minimum wage rate prescribed in the contract for a class of laborers or mechanics includes a fringe benefit which is not expressed as an hourly rate, the contractor shall either pay the benefit as stated in the wage determination or shall pay another bona fide fringe benefit or an hourly cash equivalent thereof.

d. If the contractor does not make payments to a trustee or other third person, the contractor may consider as part of the wages of any laborer or mechanic the amount of any costs reasonably anticipated in providing bona fide fringe benefits under a plan or program, Provided, That the Secretary of Labor has found, upon the written request of the contractor, that the applicable standards of the Davis-Bacon Act have been met. The Secretary of Labor may require the contractor to set aside in a separate account assets for the meeting of obligations under the plan or program.

2. Withholding

The contracting agency shall upon its own action or upon written request of an authorized representative of the Department of Labor, withhold or cause to be withheld from the contractor under this contract, or any other Federal contract with the same prime contractor, or any other federally-assisted contract subject to Davis-Bacon prevailing wage requirements, which is held by the same prime contractor, so much of the accrued payments or advances as may be considered necessary to pay laborers and mechanics, including apprentices, trainees, and helpers, employed by the contractor or any subcontractor the full amount of wages required by the contract. In the event of failure to pay any laborer or mechanic, including any apprentice, trainee, or helper, employed or working on the site of the work, all or part of the wages required by the contract, the contracting agency may, after written notice to the contractor, take such action as may be necessary to cause the suspension of any further payment, advance, or guarantee of funds until such violations have ceased.

3. Payrolls and basic records

a. Payrolls and basic records relating thereto shall be maintained by the contractor during the course of the work and preserved for a period of three years thereafter for all laborers and mechanics working at the site of the work. Such records shall contain the name, address, and social security number of each such worker, his or her correct classification, hourly rates of wages paid (including rates of contributions or costs anticipated for bona fide fringe benefits or cash equivalents thereof of the types described in section 1(b)(2)(B) of the Davis-Bacon Act), daily and weekly number of hours worked, deductions made and actual wages paid. Whenever the Secretary of Labor has found under 29 CFR 5.5(a)(1)(iv) that the wages of any laborer or mechanic include the amount of any costs reasonably anticipated in providing benefits under a plan or program described in section 1(b)(2)(B) of the Davis-Bacon Act, the contractor shall maintain records which show that the commitment to provide such benefits is enforceable, that the plan or program is financially responsible, and that the plan or program has been communicated in writing to the laborers or mechanics affected, and records which show the costs anticipated or the actual cost incurred in providing such benefits. Contractors employing apprentices or trainees under approved programs shall maintain written evidence of the registration of apprenticeship programs and certification of trainee programs, the registration of the apprentices and trainees, and the ratios and wage rates prescribed in the applicable programs.

b.(1) The contractor shall submit weekly for each week in which any contract work is performed a copy of all payrolls to the contracting agency. The payrolls submitted shall set out accurately and completely all of the information required to be maintained under 29 CFR 5.5(a)(3)(i), except that full social security numbers and home addresses shall not be included on weekly transmittals. Instead the payrolls shall only need to include an individually identifying number for each employee (e.g. , the last four digits of the employee's social security number). The required weekly payroll information may be submitted in any form desired. Optional Form WH–347 is available for this purpose from the Wage and Hour Division Web site at http://www.dol.gov/esa/whd/forms/wh347instr.htm or its successor site. The prime contractor is responsible for the submission of copies of payrolls by all subcontractors. Contractors and subcontractors shall maintain the full social security number and current address of each covered worker, and shall provide them upon request to the contracting agency for transmission to the State DOT, the FHWA or the Wage and Hour Division of the Department of Labor for purposes of an investigation or audit of compliance with prevailing wage requirements. It is not a violation of this section for a prime contractor to require a subcontractor to provide addresses and social security numbers to the prime contractor for its own records, without weekly submission to the contracting agency..

(2) Each payroll submitted shall be accompanied by a "Statement of Compliance," signed by the contractor or subcontractor or his or her agent who pays or supervises the payment of the persons employed under the contract and shall certify the following:

(i) That the payroll for the payroll period contains the information required to be provided under §5.5 (a)(3)(ii) of Regulations, 29 CFR part 5, the appropriate information is being maintained under §5.5 (a)(3)(i) of Regulations, 29 CFR part 5, and that such information is correct and complete;

(ii) That each laborer or mechanic (including each helper, apprentice, and trainee) employed on the contract during the payroll period has been paid the full weekly wages earned, without rebate, either directly or indirectly, and that no deductions have been made either directly or indirectly from the full wages earned, other than permissible deductions as set forth in Regulations, 29 CFR part 3;

(iii) That each laborer or mechanic has been paid not less than the applicable wage rates and fringe benefits or cash equivalents for the classification of work performed, as specified in the applicable wage determination incorporated into the contract.

(3) The weekly submission of a properly executed certification set forth on the reverse side of Optional Form WH–347 shall satisfy the requirement for submission of the "Statement of Compliance" required by paragraph 3.b.(2) of this section.

(4) The falsification of any of the above certifications may subject the contractor or subcontractor to civil or criminal prosecution under section 1001 of title 18 and section 231 of title 31 of the United States Code.

c. The contractor or subcontractor shall make the records required under paragraph 3.a. of this section available for inspection, copying, or transcription by authorized representatives of the contracting agency, the State DOT, the FHWA, or the Department of Labor, and shall permit such representatives to interview employees during working hours on the job. If the contractor or subcontractor fails to submit the required records or to make them available, the FHWA may, after written notice to the contractor, the contracting agency or the State DOT, take such action as may be necessary to cause the suspension of any further payment, advance, or guarantee of funds. Furthermore, failure to submit the required records upon request or to make such records available may be grounds for debarment action pursuant to 29 CFR 5.12.

4. Apprentices and trainees

a. Apprentices (programs of the USDOL).

Apprentices will be permitted to work at less than the predetermined rate for the work they performed when they are employed pursuant to and individually registered in a bona fide apprenticeship program registered with the U.S. Department of Labor, Employment and Training Administration, Office of Apprenticeship Training, Employer and Labor Services, or with a State Apprenticeship Agency recognized by the Office, or if a person is employed in his or her first 90 days of probationary employment as an apprentice in such an apprenticeship program, who is not individually registered in the program, but who has been certified by the Office of Apprenticeship Training, Employer and Labor Services or a State Apprenticeship Agency (where appropriate) to be eligible for probationary employment as an apprentice.

The allowable ratio of apprentices to journeymen on the job site in any craft classification shall not be greater than the ratio permitted to the contractor as to the entire work force under the registered program. Any worker listed on a payroll at an apprentice wage rate, who is not registered or otherwise employed as stated above, shall be paid not less than the applicable wage rate on the wage determination for the classification of work actually performed. In addition, any apprentice performing work on the job site in excess of the ratio permitted under the registered program shall be paid not less than the applicable wage rate on the wage determination for the work actually performed. Where a contractor is performing construction on a project in a locality other than that in which its program is registered, the ratios and wage rates (expressed in percentages of the journeyman's hourly rate) specified in the contractor's or subcontractor's registered program shall be observed.

Every apprentice must be paid at not less than the rate specified in the registered program for the apprentice's level of progress, expressed as a percentage of the journeymen hourly rate specified in the applicable wage determination. Apprentices shall be paid fringe benefits in accordance with the provisions of the apprenticeship program. If the apprenticeship program does not specify fringe benefits, apprentices must be paid the full amount of fringe benefits listed on the wage determination for the applicable classification. If the Administrator determines that a different practice prevails for the applicable apprentice classification, fringes shall be paid in accordance with that determination.

In the event the Office of Apprenticeship Training, Employer and Labor Services, or a State Apprenticeship Agency recognized by the Office, withdraws approval of an apprenticeship program, the contractor will no longer be permitted to utilize apprentices at less than the applicable predetermined rate for the work performed until an acceptable program is approved.

b. Trainees (programs of the USDOL).

Except as provided in 29 CFR 5.16, trainees will not be permitted to work at less than the predetermined rate for the work performed unless they are employed pursuant to and individually registered in a program which has received prior approval, evidenced by formal certification by the U.S. Department of Labor, Employment and Training Administration.

The ratio of trainees to journeymen on the job site shall not be greater than permitted under the plan approved by the Employment and Training Administration.

Every trainee must be paid at not less than the rate specified in the approved program for the trainee's level of progress, expressed as a percentage of the journeyman hourly rate specified in the applicable wage determination. Trainees shall be paid fringe benefits in accordance with the provisions of the trainee program. If the trainee program does not mention fringe benefits, trainees shall be paid the full amount of fringe benefits listed on the wage determination unless the Administrator of the Wage and Hour Division determines that there is an apprenticeship program associated with the corresponding journeyman wage rate on the wage determination which provides for less than full fringe benefits for apprentices. Any employee listed on the payroll at a trainee rate who is not registered and participating in a training plan approved by the Employment and Training Administration shall be paid not less than the applicable wage rate on the wage determination for the classification of work actually performed. In addition, any trainee performing work on the job site in excess of the ratio permitted under the registered program shall be paid not less than the applicable wage rate on the wage determination for the work actually performed.

In the event the Employment and Training Administration withdraws approval of a training program, the contractor will no longer be permitted to utilize trainees at less than the applicable predetermined rate for the work performed until an acceptable program is approved.

c. Equal employment opportunity. The utilization of apprentices, trainees and journeymen under this part shall be in conformity with the equal employment opportunity requirements of Executive Order 11246, as amended, and 29 CFR part 30.

d. Apprentices and Trainees (programs of the U.S. DOT).

Apprentices and trainees working under apprenticeship and skill training programs which have been certified by the Secretary of Transportation as promoting EEO in connection with Federal-aid highway construction programs are not subject to the requirements of paragraph 4 of this Section IV. The straight time hourly wage rates for apprentices and trainees under such programs will be established by the particular programs. The ratio of apprentices and trainees to journeymen shall not be greater than permitted by the terms of the particular program.

5. Compliance with Copeland Act requirements. The contractor shall comply with the requirements of 29 CFR part 3, which are incorporated by reference in this contract.

6. Subcontracts. The contractor or subcontractor shall insert Form FHWA-1273 in any subcontracts and also require the subcontractors to include Form FHWA-1273 in any lower tier subcontracts. The prime contractor shall be responsible for the compliance by any subcontractor or lower tier subcontractor with all the contract clauses in 29 CFR 5.5.

7. Contract termination: debarment. A breach of the contract clauses in 29 CFR 5.5 may be grounds for termination of the contract, and for debarment as a contractor and a subcontractor as provided in 29 CFR 5.12.

8. Compliance with Davis-Bacon and Related Act requirements. All rulings and interpretations of the Davis-Bacon and Related Acts contained in 29 CFR parts 1, 3, and 5 are herein incorporated by reference in this contract.

9. Disputes concerning labor standards. Disputes arising out of the labor standards provisions of this contract shall not be subject to the general disputes clause of this contract. Such disputes shall be resolved in accordance with the procedures of the Department of Labor set forth in 29 CFR parts 5, 6, and 7. Disputes within the meaning of this clause include disputes between the contractor (or any of its subcontractors) and the contracting agency, the U.S. Department of Labor, or the employees or their representatives.

10. Certification of eligibility.

a. By entering into this contract, the contractor certifies that neither it (nor he or she) nor any person or firm who has an interest in the contractor's firm is a person or firm ineligible to be awarded Government contracts by virtue of section 3(a) of the Davis-Bacon Act or 29 CFR 5.12(a)(1).

b. No part of this contract shall be subcontracted to any person or firm ineligible for award of a Government contract by virtue of section 3(a) of the Davis-Bacon Act or 29 CFR 5.12(a)(1).

c. The penalty for making false statements is prescribed in the U.S. Criminal Code, 18 U.S.C. 1001.

V. CONTRACT WORK HOURS AND SAFETY STANDARDS ACT

The following clauses apply to any Federal-aid construction contract in an amount in excess of $100,000 and subject to the overtime provisions of the Contract Work Hours and Safety Standards Act. These clauses shall be inserted in addition to the clauses required by 29 CFR 5.5(a) or 29 CFR 4.6. As used in this paragraph, the terms laborers and mechanics include watchmen and guards.

1. Overtime requirements. No contractor or subcontractor contracting for any part of the contract work which may require or involve the employment of laborers or mechanics shall require or permit any such laborer or mechanic in any workweek in which he or she is employed on such work to work in excess of forty hours in such workweek unless such laborer or mechanic receives compensation at a rate not less than one and one-half times the basic rate of pay for all hours worked in excess of forty hours in such workweek.

2. Violation; liability for unpaid wages; liquidated damages. In the event of any violation of the clause set forth in paragraph (1.) of this section, the contractor and any subcontractor responsible therefor shall be liable for the unpaid wages. In addition, such contractor and subcontractor shall be liable to the United States (in the case of work done under contract for the District of Columbia or a territory, to such District or to such territory), for liquidated damages. Such liquidated damages shall be computed with respect to each individual laborer or mechanic, including watchmen and guards, employed in violation of the clause set forth in paragraph (1.) of this section, in the sum of $10 for each calendar day on which such individual was required or permitted to work in excess of the standard workweek of forty hours without payment of the overtime wages required by the clause set forth in paragraph (1.) of this section.

3. Withholding for unpaid wages and liquidated damages. The FHWA or the contacting agency shall upon its own action or upon written request of an authorized representative of the Department of Labor withhold or cause to be withheld, from any moneys payable on account of work performed by the contractor or subcontractor under any such contract or any other Federal contract with the same prime contractor, or any other federally-assisted contract subject to the Contract Work Hours and Safety Standards Act, which is held by the same prime contractor, such sums as may be determined to be necessary to satisfy any liabilities of such contractor or subcontractor for unpaid wages and liquidated damages as provided in the clause set forth in paragraph (2.) of this section.

4. Subcontracts. The contractor or subcontractor shall insert in any subcontracts the clauses set forth in paragraph (1.) through (4.) of this section and also a clause requiring the subcontractors to include these clauses in any lower tier subcontracts. The prime contractor shall be responsible for compliance by any subcontractor or lower tier subcontractor with the clauses set forth in paragraphs (1.) through (4.) of this section.

VI. SUBLETTING OR ASSIGNING THE CONTRACT

This provision is applicable to all Federal-aid construction contracts on the National Highway System.

1. The contractor shall perform with its own organization contract work amounting to not less than 30 percent (or a greater percentage if specified elsewhere in the contract) of the total original contract price, excluding any specialty items designated by the contracting agency. Specialty items may be performed by subcontract and the amount of any such specialty items performed may be deducted from the total original contract price before computing the amount of work required to be performed by the contractor's own organization (23 CFR 635.116).

a. The term "perform work with its own organization" refers to workers employed or leased by the prime contractor, and equipment owned or rented by the prime contractor, with or without operators. Such term does not include employees or equipment of a subcontractor or lower tier subcontractor, agents of the prime contractor, or any other assignees. The term may include payments for the costs of hiring leased employees from an employee leasing firm meeting all relevant Federal and State regulatory requirements. Leased employees may only be included in this term if the prime contractor meets all of the following conditions:

(1) the prime contractor maintains control over the supervision of the day-to-day activities of the leased employees;
(2) the prime contractor remains responsible for the quality of the work of the leased employees;
(3) the prime contractor retains all power to accept or exclude individual employees from work on the project; and
(4) the prime contractor remains ultimately responsible for the payment of predetermined minimum wages, the submission of payrolls, statements of compliance and all other Federal regulatory requirements.

b. "Specialty Items" shall be construed to be limited to work that requires highly specialized knowledge, abilities, or equipment not ordinarily available in the type of contracting organizations qualified and expected to bid or propose on the contract as a whole and in general are to be limited to minor components of the overall contract.

2. The contract amount upon which the requirements set forth in paragraph (1) of Section VI is computed includes the cost of material and manufactured products which are to be purchased or produced by the contractor under the contract provisions.

3. The contractor shall furnish (a) a competent superintendent or supervisor who is employed by the firm, has full authority to direct performance of the work in accordance with the contract requirements, and is in charge of all construction operations (regardless of who performs the work) and (b) such other of its own organizational resources (supervision, management, and engineering services) as the contracting officer determines is necessary to assure the performance of the contract.

4. No portion of the contract shall be sublet, assigned or otherwise disposed of except with the written consent of the contracting officer, or authorized representative, and such consent when given shall not be construed to relieve the contractor of any responsibility for the fulfillment of the contract. Written consent will be given only after the contracting agency has assured that each subcontract is evidenced in writing and that it contains all pertinent provisions and requirements of the prime contract.

5. The 30% self-performance requirement of paragraph (1) is not applicable to design-build contracts; however, contracting agencies may establish their own self-performance requirements.

VII. SAFETY: ACCIDENT PREVENTION

This provision is applicable to all Federal-aid construction contracts and to all related subcontracts.

1. In the performance of this contract the contractor shall comply with all applicable Federal, State, and local laws governing safety, health, and sanitation (23 CFR 635). The contractor shall provide all safeguards, safety devices and protective equipment and take any other needed actions as it determines, or as the contracting officer may determine, to be reasonably necessary to protect the life and health of employees on the job and the safety of the public and to protect property in connection with the performance of the work covered by the contract.

2. It is a condition of this contract, and shall be made a condition of each subcontract, which the contractor enters into pursuant to this contract, that the contractor and any subcontractor shall not permit any employee, in performance of the contract, to work in surroundings or under conditions which are unsanitary, hazardous or dangerous to his/her health or safety, as determined under construction safety and health standards (29 CFR 1926) promulgated by the Secretary of Labor, in accordance with Section 107 of the Contract Work Hours and Safety Standards Act (40 U.S.C. 3704).

3. Pursuant to 29 CFR 1926.3, it is a condition of this contract that the Secretary of Labor or authorized representative thereof, shall have right of entry to any site of contract performance to inspect or investigate the matter of compliance with the construction safety and health standards and to carry out the duties of the Secretary under Section 107 of the Contract Work Hours and Safety Standards Act (40 U.S.C.3704).

VIII. FALSE STATEMENTS CONCERNING HIGHWAY PROJECTS

This provision is applicable to all Federal-aid construction contracts and to all related subcontracts.

In order to assure high quality and durable construction in conformity with approved plans and specifications and a high degree of reliability on statements and representations made by engineers, contractors, suppliers, and workers on Federal-aid highway projects, it is essential that all persons concerned with the project perform their functions as carefully, thoroughly, and honestly as possible. Willful falsification, distortion, or misrepresentation with respect to any facts related to the project is a violation of Federal law. To prevent any misunderstanding regarding the seriousness of these and similar acts, Form FHWA-1022 shall be posted on each Federal-aid highway project (23 CFR 635) in one or more places where it is readily available to all persons concerned with the project:

18 U.S.C. 1020 reads as follows:

"Whoever, being an officer, agent, or employee of the United States, or of any State or Territory, or whoever, whether a person, association, firm, or corporation, knowingly makes any false statement, false representation, or false report as to the character, quality, quantity, or cost of the material used or to be used, or the quantity or quality of the work performed or to be performed, or the cost thereof in connection with the submission of plans, maps, specifications, contracts, or costs of construction on any highway or related project submitted for approval to the Secretary of Transportation; or

Whoever knowingly makes any false statement, false representation, false report or false claim with respect to the character, quality, quantity, or cost of any work performed or to be performed, or materials furnished or to be furnished, in connection with the construction of any highway or related project approved by the Secretary of Transportation; or

Whoever knowingly makes any false statement or false representation as to material fact in any statement, certificate, or report submitted pursuant to provisions of the Federal-aid Roads Act approved July 1, 1916, (39 Stat. 355), as amended and supplemented;

Shall be fined under this title or imprisoned not more than 5 years or both."

IX. IMPLEMENTATION OF CLEAN AIR ACT AND FEDERAL WATER POLLUTION CONTROL ACT

This provision is applicable to all Federal-aid construction contracts and to all related subcontracts.

By submission of this bid/proposal or the execution of this contract, or subcontract, as appropriate, the bidder, proposer, Federal-aid construction contractor, or subcontractor, as appropriate, will be deemed to have stipulated as follows:

1. That any person who is or will be utilized in the performance of this contract is not prohibited from receiving an award due to a violation of Section 508 of the Clean Water Act or Section 306 of the Clean Air Act.
2. That the contractor agrees to include or cause to be included the requirements of paragraph (1) of this Section X in every subcontract, and further agrees to take such action as the contracting agency may direct as a means of enforcing such requirements.

X. CERTIFICATION REGARDING DEBARMENT, SUSPENSION, INELIGIBILITY AND VOLUNTARY EXCLUSION

This provision is applicable to all Federal-aid construction contracts, design-build contracts, subcontracts, lower-tier subcontracts, purchase orders, lease agreements, consultant contracts or any other covered transaction requiring FHWA approval or that is estimated to cost $25,000 or more – as defined in 2 CFR Parts 180 and 1200.

1. **Instructions for Certification – First Tier Participants:**

a. By signing and submitting this proposal, the prospective first tier participant is providing the certification set out below.

b. The inability of a person to provide the certification set out below will not necessarily result in denial of participation in this covered transaction. The prospective first tier participant shall submit an explanation of why it cannot provide the certification set out below. The certification or explanation will be considered in connection with the department or agency's determination whether to enter into this transaction. However, failure of the prospective first tier participant to furnish a certification or an explanation shall disqualify such a person from participation in this transaction.

c. The certification in this clause is a material representation of fact upon which reliance was placed when the contracting agency determined to enter into this transaction. If it is later determined that the prospective participant knowingly rendered an erroneous certification, in addition to other remedies available to the Federal Government, the contracting agency may terminate this transaction for cause of default.

d. The prospective first tier participant shall provide immediate written notice to the contracting agency to whom this proposal is submitted if any time the prospective first tier participant learns that its certification was erroneous when submitted or has become erroneous by reason of changed circumstances.

e. The terms "covered transaction," "debarred," "suspended," "ineligible," "participant," "person," "principal," and "voluntarily excluded," as used in this clause, are defined in 2 CFR Parts 180 and 1200. "First Tier Covered Transactions" refers to any covered transaction between a grantee or subgrantee of Federal funds and a participant (such as the prime or general contract). "Lower Tier Covered Transactions" refers to any covered transaction under a First Tier Covered Transaction (such as subcontracts). "First Tier Participant" refers to the participant who has entered into a covered transaction with a grantee or subgrantee of Federal funds (such as the prime or general contractor). "Lower Tier Participant" refers any participant who has entered into a covered transaction with a First Tier Participant or other Lower Tier Participants (such as subcontractors and suppliers).

f. The prospective first tier participant agrees by submitting this proposal that, should the proposed covered transaction be entered into, it shall not knowingly enter into any lower tier covered transaction with a person who is debarred, suspended, declared ineligible, or voluntarily excluded from participation in this covered transaction, unless authorized by the department or agency entering into this transaction.

g. The prospective first tier participant further agrees by submitting this proposal that it will include the clause titled "Certification Regarding Debarment, Suspension, Ineligibility and Voluntary Exclusion-Lower Tier Covered Transactions," provided by the department or contracting agency, entering into this covered transaction, without modification, in all lower tier covered transactions and in all solicitations for lower tier covered transactions exceeding the $25,000 threshold.

h. A participant in a covered transaction may rely upon a certification of a prospective participant in a lower tier covered transaction that is not debarred, suspended, ineligible, or voluntarily excluded from the covered transaction, unless it knows that the certification is erroneous. A participant is responsible for ensuring that its principals are not suspended, debarred, or otherwise ineligible to participate in covered transactions. To verify the eligibility of its principals, as well as the eligibility of any lower tier prospective participants, each participant may, but is not required to, check the Excluded Parties List System website (https://www.epls.gov/), which is compiled by the General Services Administration.

i. Nothing contained in the foregoing shall be construed to require the establishment of a system of records in order to render in good faith the certification required by this clause. The knowledge and information of the prospective participant is not required to exceed that which is normally possessed by a prudent person in the ordinary course of business dealings.

j. Except for transactions authorized under paragraph (f) of these instructions, if a participant in a covered transaction knowingly enters into a lower tier covered transaction with a person who is suspended, debarred, ineligible, or voluntarily excluded from participation in this transaction, in addition to other remedies available to the Federal Government, the department or agency may terminate this transaction for cause or default.

* * * * *

2. Certification Regarding Debarment, Suspension, Ineligibility and Voluntary Exclusion – First Tier Participants:

a. The prospective first tier participant certifies to the best of its knowledge and belief, that it and its principals:

(1) Are not presently debarred, suspended, proposed for debarment, declared ineligible, or voluntarily excluded from participating in covered transactions by any Federal department or agency;

(2) Have not within a three-year period preceding this proposal been convicted of or had a civil judgment rendered against them for commission of fraud or a criminal offense in connection with obtaining, attempting to obtain, or performing a public (Federal, State or local) transaction or contract under a public transaction; violation of Federal or State antitrust statutes or commission of embezzlement, theft, forgery, bribery, falsification or destruction of records, making false statements, or receiving stolen property;

(3) Are not presently indicted for or otherwise criminally or civilly charged by a governmental entity (Federal, State or local) with commission of any of the offenses enumerated in paragraph (a)(2) of this certification; and

(4) Have not within a three-year period preceding this application/proposal had one or more public transactions (Federal, State or local) terminated for cause or default.

b. Where the prospective participant is unable to certify to any of the statements in this certification, such prospective participant shall attach an explanation to this proposal.

2. **Instructions for Certification - Lower Tier Participants:**

(Applicable to all subcontracts, purchase orders and other lower tier transactions requiring prior FHWA approval or estimated to cost $25,000 or more - 2 CFR Parts 180 and 1200)

a. By signing and submitting this proposal, the prospective lower tier is providing the certification set out below.

b. The certification in this clause is a material representation of fact upon which reliance was placed when this transaction was entered into. If it is later determined that the prospective lower tier participant knowingly rendered an erroneous certification, in addition to other remedies available to the Federal Government, the department, or agency with which this transaction originated may pursue available remedies, including suspension and/or debarment.

c. The prospective lower tier participant shall provide immediate written notice to the person to which this proposal is submitted if at any time the prospective lower tier participant learns that its certification was erroneous by reason of changed circumstances.

d. The terms "covered transaction," "debarred," "suspended," "ineligible," "participant," "person," "principal," and "voluntarily excluded," as used in this clause, are defined in 2 CFR Parts 180 and 1200. You may contact the person to which this proposal is submitted for assistance in obtaining a copy of those regulations. "First Tier Covered Transactions" refers to any covered transaction between a grantee or subgrantee of Federal funds and a participant (such as the prime or general contract). "Lower Tier Covered Transactions" refers to any covered transaction under a First Tier Covered Transaction (such as subcontracts). "First Tier Participant" refers to the participant who has entered into a covered transaction with a grantee or subgrantee of Federal funds (such as the prime or general contractor). "Lower Tier Participant" refers any participant who has entered into a covered transaction with a First Tier Participant or other Lower Tier Participants (such as subcontractors and suppliers).

e. The prospective lower tier participant agrees by submitting this proposal that, should the proposed covered transaction be entered into, it shall not knowingly enter into any lower tier covered transaction with a person who is debarred, suspended, declared ineligible, or voluntarily excluded from participation in this covered transaction, unless authorized by the department or agency with which this transaction originated.

f. The prospective lower tier participant further agrees by submitting this proposal that it will include this clause titled "Certification Regarding Debarment, Suspension, Ineligibility and Voluntary Exclusion-Lower Tier Covered Transaction," without modification, in all lower tier covered transactions and in all solicitations for lower tier covered transactions exceeding the $25,000 threshold.

g. A participant in a covered transaction may rely upon a certification of a prospective participant in a lower tier covered transaction that is not debarred, suspended, ineligible, or voluntarily excluded from the covered transaction, unless it knows that the certification is erroneous. A participant is responsible for ensuring that its principals are not suspended, debarred, or otherwise ineligible to participate in covered transactions. To verify the eligibility of its principals, as well as the eligibility of any lower tier prospective participants, each participant may, but is not required to, check the Excluded Parties List System website (https://www.epls.gov/), which is compiled by the General Services Administration.

h. Nothing contained in the foregoing shall be construed to require establishment of a system of records in order to render in good faith the certification required by this clause. The knowledge and information of participant is not required to exceed that which is normally possessed by a prudent person in the ordinary course of business dealings.

i. Except for transactions authorized under paragraph e of these instructions, if a participant in a covered transaction knowingly enters into a lower tier covered transaction with a person who is suspended, debarred, ineligible, or voluntarily excluded from participation in this transaction, in addition to other remedies available to the Federal Government, the

department or agency with which this transaction originated may pursue available remedies, including suspension and/or debarment.

* * * * *

Certification Regarding Debarment, Suspension, Ineligibility and Voluntary Exclusion--Lower Tier Participants:

1. The prospective lower tier participant certifies, by submission of this proposal, that neither it nor its principals is presently debarred, suspended, proposed for debarment, declared ineligible, or voluntarily excluded from participating in covered transactions by any Federal department or agency.

2. Where the prospective lower tier participant is unable to certify to any of the statements in this certification, such prospective participant shall attach an explanation to this proposal.

* * * * *

XI. CERTIFICATION REGARDING USE OF CONTRACT FUNDS FOR LOBBYING

This provision is applicable to all Federal-aid construction contracts and to all related subcontracts which exceed $100,000 (49 CFR 20).

1. The prospective participant certifies, by signing and submitting this bid or proposal, to the best of his or her knowledge and belief, that:

a. No Federal appropriated funds have been paid or will be paid, by or on behalf of the undersigned, to any person for influencing or attempting to influence an officer or employee of any Federal agency, a Member of Congress, an officer or employee of Congress, or an employee of a Member of Congress in connection with the awarding of any Federal contract, the making of any Federal grant, the making of any Federal loan, the entering into of any cooperative agreement, and the extension, continuation, renewal, amendment, or modification of any Federal contract, grant, loan, or cooperative agreement.

b. If any funds other than Federal appropriated funds have been paid or will be paid to any person for influencing or attempting to influence an officer or employee of any Federal agency, a Member of Congress, an officer or employee of Congress, or an employee of a Member of Congress in connection with this Federal contract, grant, loan, or cooperative agreement, the undersigned shall complete and submit Standard Form-LLL, "Disclosure Form to Report Lobbying," in accordance with its instructions.

2. This certification is a material representation of fact upon which reliance was placed when this transaction was made or entered into. Submission of this certification is a prerequisite for making or entering into this transaction imposed by 31 U.S.C. 1352. Any person who fails to file the required certification shall be subject to a civil penalty of not less than $10,000 and not more than $100,000 for each such failure.

3. The prospective participant also agrees by submitting its bid or proposal that the participant shall require that the language of this certification be included in all lower tier subcontracts, which exceed $100,000 and that all such recipients shall certify and disclose accordingly.

ATTACHMENT A - EMPLOYMENT AND MATERIALS PREFERENCE FOR APPALACHIAN DEVELOPMENT HIGHWAY SYSTEM OR APPALACHIAN LOCAL ACCESS ROAD CONTRACTS

This provision is applicable to all Federal-aid projects funded under the Appalachian Regional Development Act of 1965.

1. During the performance of this contract, the contractor undertaking to do work which is, or reasonably may be, done as on-site work, shall give preference to qualified persons who regularly reside in the labor area as designated by the DOL wherein the contract work is situated, or the subregion, or the Appalachian counties of the State wherein the contract work is situated, except:

a. To the extent that qualified persons regularly residing in the area are not available.

b. For the reasonable needs of the contractor to employ supervisory or specially experienced personnel necessary to assure an efficient execution of the contract work.

c. For the obligation of the contractor to offer employment to present or former employees as the result of a lawful collective bargaining contract, provided that the number of nonresident persons employed under this subparagraph (1c) shall not exceed 20 percent of the total number of employees employed by the contractor on the contract work, except as provided in subparagraph (4) below.

2. The contractor shall place a job order with the State Employment Service indicating (a) the classifications of the laborers, mechanics and other employees required to perform the contract work, (b) the number of employees required in each classification, (c) the date on which the participant estimates such employees will be required, and (d) any other pertinent information required by the State Employment Service to complete the job order form. The job order may be placed with the State Employment Service in writing or by telephone. If during the course of the contract work, the information submitted by the contractor in the original job order is substantially modified, the participant shall promptly notify the State Employment Service.

3. The contractor shall give full consideration to all qualified job applicants referred to him by the State Employment Service. The contractor is not required to grant employment to any job applicants who, in his opinion, are not qualified to perform the classification of work required.

4. If, within one week following the placing of a job order by the contractor with the State Employment Service, the State Employment Service is unable to refer any qualified job applicants to the contractor, or less than the number requested, the State Employment Service will forward a certificate to the contractor indicating the unavailability of applicants. Such certificate shall be made a part of the contractor's permanent project records. Upon receipt of this certificate, the contractor may employ persons who do not normally reside in the labor area to fill positions covered by the certificate, notwithstanding the provisions of subparagraph (1c) above.

5. The provisions of 23 CFR 633.207(e) allow the contracting agency to provide a contractual preference for the use of mineral resource materials native to the Appalachian region.

6. The contractor shall include the provisions of Sections 1 through 4 of this Attachment A in every subcontract for work which is, or reasonably may be, done as on-site work.

ATTACHMENT "G"

BUY AMERICA REQUIREMENTS

Source of Supply – Steel and Iron (Federal Aid Contracts Only): For Federal-aid contracts, the Contractor will only use steel and iron produced in the United States, in accordance with the buy America provisions of 23 CFR 635.410. Contractor will ensure that all manufacturing processes for these materials occur in the United States. A manufacturing process is any process that modifies the chemical content, physical shape, size or final finish of a product, beginning with the initial melding and mixing and continuing through the bending and coating stages. A manufactured steel or iron product is complete only when all grinding, drilling, welding, finishing and coating have been completed. If a domestic product is taken outside the United States for any process, it becomes foreign source material. When using steel and iron as a component of any manufactured product incorporated into the project (*e.g.*, concrete pipe, pre-stressed beams, corrugated steel pipe, etc.), these same provisions apply, except that the manufacturer may use minimal quantities of foreign steel and iron when the cost of such foreign materials does not exceed 0.1% of the compensation or $2,500, whichever is greater. These requirements are applicable to all steel and iron materials incorporated into the finished work, but are not applicable to steel and iron items that the Contractor uses but does not incorporate into the finished work. The Contractor shall provide a certification from the producer of steel or iron, or any product containing steel or iron as a component, stating that all steel or iron furnished or incorporated into the finished product was manufactured in the United States in accordance with the requirements of this provision. Such certification shall also include: (1) a statement that the product was produced entirely within the United States, or (2) a statement that the product was produced with the United States except for minimal quantities of foreign steel and iron and specify the actual value of the product. Each such certification shall be furnished to the AUTHORITY prior to incorporating the material into the project. When FHWA allows the use of foreign steel on a project, Contractor shall furnish invoices to document the costs of such material, and obtain the AUTHORITY'S written approval prior to incorporating the material into the project.

ATTACHMENT "H"

PERFORMANCE AND PAYMENT BOND

BY THIS BOND, WE, _____, Inc., as Principal and _____ a Corporation, as Surety, are bound to the Solid Waste Authority of Palm Beach County, hereinafter referred to as "Authority", in the sum of _____ **Dollars (up to $10,000,000),** for payment of which we bind ourselves, our heirs, personal representatives, successors, and assigns, jointly and severally.

THE CONDITION OF THIS BOND is that if Principal:

1. Performs the Agreement dated _____, 20_____ between Principal and Authority for Proposal of Hurricane/Disaster Debris Removal, Reduction and Disposal, **Agreement No. 22-201,** the Agreement being made a part of this bond by reference, in the time and in the manner prescribed in the Agreement, and;

2. Promptly makes payment to all claimants, as defined in Section 255.05(1), Florida Statutes, supplying Principal with labor, materials and supplies, used directly or indirectly by Principal in the prosecution of the work provided for in the Agreement, and;

3. Pays Authority all loss, damages, expenses, costs, and attorney's fees, including appellate proceedings, that Authority sustains because of a default by Principal under the Agreement, and;

4. Performs the guarantee of all work and materials furnished under the Agreement for the time specified in the Agreement, and;

5. At completion of all work covered by Agreement and Final Payment by Authority to Principal then Principal will replace this Performance and Payment Bond with a Proposal Bond, in the amount of 5% of this Performance and Payment Bond, to be held by the Authority as a guarantee that Principal will provide to the Authority a Performance and Payment Bond in the amount of up to $10,000,000 on the occasion of a subsequent Task Order in accordance with the above referenced Agreement;

then this bond is void; otherwise it remains in full force.

Surety shall be responsible for any and all liquidated damages imposed by the Authority for the referenced Agreement.

Any changes in or under the Agreement Documents and compliance or noncompliance with any formalities connected with the Agreement or the changes does not affect Surety's obligation under this bond. Any increase in the total Agreement amount as authorized by the Authority shall accordingly increase the Surety's obligation by the same dollar amount of said increase. CONTRACTOR shall be responsible for notification to Surety of all such changes.

See subsection (2) of Section 255.05, Florida Statutes as amended for the notice and time limitations for claimants.

Signed and sealed this ____ day of _____, 20____.

PRINCIPAL:_____

By: _____
Signature

WITNESS:

Name: _____

1. _____

Title: _____

2. _____

Address: _____

_____

Telephone: _____

SURETY: _____

By: _____
Signature

WITNESS:

Name: _____

1. _____

Title: _____

2. _____

Address: _____

_____

Telephone: _____

NOTE: Date of Bond must not be prior to date of Agreement. If CONTRACTOR is a Partnership, all partners must execute bond.

IMPORTANT: Surety companies executing bonds **must** appear and remain on the Treasury Department's most current list (Circular 570 as amended) during construction, guarantee and warranty periods, and be authorized to transact business in the State of Florida, and be pre-approved by the Authority.

Village of Palm Springs

Executive Brief

AGENDA DATE: June 9, 2022

DEPARTMENT: Public Service

ITEM #8: Approve Solar Chloride (Solar Salt) Purchase Agreement Renewal - Cooperative Purchasing (Piggyback) - Utilities Department (FY 2022 Budget Funded) Morton Salt, Inc.

SUMMARY: The Public Service Department purchases solar chloride (solar salt). A critical chemical component in the water treatment process for the Village's MIEX water treatment process and assists in the pre-treatment of water by removing organic contaminants, thus, enabling the Village to provide a higher quality of water to our customers. Currently, the Village utilizes Morton Salt to assist with these products. The existing cooperative purchasing contract expires on May 30, 2022.

To ensure the lowest possible price, the staff recommends that the Village renew the current Southeast Florida Governmental Purchasing Cooperative (Co-Op) contract. The contract was awarded to Morton Salt, Inc. by the City of Boca Raton, the Lead Agency for the Co-op, and was completed through a competitive selection process - Solar Salt (Bulk), Delivery & Supply (Bid No. 2021-024 - May 31, 2021). The agreement was renewed by the City of Boca Raton on March 8, 2022, for one (1) additional year.

The proposed price provided is as follows:

- Solar Salt $155.81/Ton

The cooperative purchasing contract renewal utilized the Southeast Florida Government Purchasing Cooperative (Co-Op). The intent is to bring member cities together and combine their purchasing needs/power within the Co-Op to receive the best (lowest) price possible. Approximately fifty-six (56) government entities, including the Village of Palm Springs, participate in the Southeast Florida Governmental Purchasing Cooperative.

If approved, the Village would accept Morton Salt's pricing by utilizing the Southeast Florida Governmental Purchasing Cooperative's (Co-Op) contract, including all terms, conditions, and pricing. The agreement would expire on May 30, 2023, with an option to renew for two (2) additional one (1) year periods. The Village will not expend more than the amount within the approved budget as it may be adopted/amended each year for these goods and services over the term of this contract.

The Village's Purchasing Code, Section 58-8. Cooperative Purchasing; provides the Village may participate, sponsor, conduct, or administer a cooperative purchasing agreement for purchasing. Such cooperative purchasing may include, but is not limited to, joint or multi-party contracts between government entities. Purchases made through a cooperative purchasing agreement are exempt from competitive selection purchase requirements outlined in this purchasing code. The Council must

approve all village purchases from a cooperative purchasing agreement that may have a total value of more than $35,000.00.

The Village Attorney prepared the renewal agreement, and the Assistant Village Manager, Interim Public Service Administrator, and the Finance Director reviewed it.

The Village has worked with the proposed vendor and has received excellent service and a quality product.

FISCAL IMPACT:

Funding to support purchases under this proposed agreement is available within the FY 2022 Budget - Water & Sewer Enterprise Fund.

Allocated/Estimated Purchase Funding:	***Amount***
FY 2022 Approved Budget - Water & Sewer Enterprise Fund	$700,000.00

Expected Purchase Costs:	***Amount***
FY 2022 Expected Purchase Costs - Water & Sewer Enterprise Fund	$131,000.00

The Village will not expend more than the amount in the approved Budget as it may be adopted/amended each year for those goods and services over the term of this contract.

ATTACHMENTS:

1. Proposed Agreement - Morton Salt, Inc.
2. City of Boca Raton - 1st Renewal
3. City of Boca Raton - Morton Salt Price Change
4. City of Boca Raton - Executed Contract
5. City of Boca Raton - Invitation to Bid
6. City of Boca Raton - Morton Salt Bid Response
7. City of Boca Raton - Bid Tabulation

AGREEMENT FOR THE DELIVERY OF SOLAR SALT

This Agreement for the Delivery of Solar Salt ("Agreement" hereafter) is made as of the 25th day of May, 2022, by and between the **Village of Palm Springs**, 226 Cypress Lane, Palm Springs, Florida 33461-1699, a municipal corporation organized and existing under the laws of the State of Florida, hereinafter referred to as the VILLAGE, and **Morton Salt Inc.**, 444 West Lake St., Chicago IL 60606 a corporation authorized to do business in the State of Florida, hereinafter referred to as the VENDOR.

RECITALS

WHEREAS, the VILLAGE is in need of a VENDOR to provide the VILLAGE with solar salt; and,

WHEREAS, the Southeast Florida Governmental Purchasing Cooperative Group through its competitive selection process awarded the Contract for delivery of solar salt (Bid # 2021-024 ("Co-op Contract" hereafter) to the VENDOR for substantially the same services sought by the VILLAGE; and,

WHEREAS, the VILLAGE requested, and the VENDOR has executed this Agreement with the VILLAGE for the delivery of solar salt based on the terms and conditions of the Co-op Contract and the pricing contained herein.

NOW THEREFORE, in consideration of the mutual promises set forth herein, the receipt and sufficiency of which are hereby acknowledged, the parties hereto agree as follows:

1. Recitals. The parties agree that the recitals set forth above are true and correct and are fully incorporated herein by reference.

2. Co-op Contract. The Co-op Contract with the VENDOR is hereby expressly made a part of this Agreement as fully as if set forth at length herein. The VILLAGE shall have all rights, obligations and remedies authorized to all entities using this bid and all associated and applicable Contract/Bid Documents as defined therein. VENDOR shall be afforded all rights and remedies against the VILLAGE as given to VENDOR under the Co-op Contract.

3. VENDOR's Proposal. In accordance with the terms and conditions in the Co-op Contract and pricing herein, the VENDOR shall deliver solar salt as requested by the VILLAGE. The pricing shall be $155.81 per ton. The goods and services to be provided by the VENDOR shall be commenced subsequent to the execution and approval of this Agreement by the VILLAGE in accordance with the Co-op Contract.

4. Contract Documents and Conflict of Terms and Conditions. The Contract Documents for this Agreement are compromised of the following:

A. All written modifications and amendments hereto;

B. This Agreement (including all exhibits);
C. Co-op Bid #2021-024 including all amendments and exhibits thereto which shall be referred to as the "Co-op Contract".

The Contract Documents of this Agreement are intended to be complementary and interpreted in harmony so as to avoid conflict with the words and phrases interpreted in a manner consistent with construction and design industry standards. In the event of any inconsistency, conflict, or ambiguity between or among the Contract Documents of this Agreement, the Contract Documents of this Agreement shall take precedence in the following order:

A. All written modifications and amendments hereto;
B. This Agreement;
C. The Co-op Contract.

5. Compensation to VENDOR. Payments by the VILLAGE to the VENDOR under this Agreement shall not exceed the amount of compensation stated in the contract, attached hereto and incorporated herein, approved by the City of Boca Raton, (the lead agency for this bid) which is $155.81 per ton. VENDOR waives consequential or incidental damages for claims, disputes or other matters in question arising out of or relating to this Agreement. The VILLAGE will not expend more than the amount in the approved budget as it may be adopted each year for these goods and services over the term of this contract.

6. Miscellaneous Provisions.

6.1 The VILLAGE and VENDOR each binds itself, its partners, its successors, assigns and legal representatives to the other party hereto, its partners, successors, assigns and legal representatives in respect of all covenants, agreements and obligations contained in the Contract Documents.

6.2 VENDOR shall maintain the insurance as required in Co-op Contract applicable to the goods and services being delivered hereunder. Said insurance will name the VILLAGE as an additional insured.

6.3 Headings and References & Exhibits: The headings contained in this Contract are inserted for convenience of reference only and shall not be a part or control or affect the meaning hereof. All references herein to Exhibits are to the exhibits hereto, each of which shall be incorporated into and deemed to be a part of this Contract.

6.4 Counterparts: This Contract may be executed in two or more counterparts, each of which shall be deemed to be an original, but all of which shall be deemed to be an original, but each of which together shall constitute one and the same instrument.

6.5 Entire Contract; Amendment and Waiver: This Contract (together with the Exhibits hereto) supersedes any and all prior negotiations and oral or written agreements heretofore made relating to the subject matter hereof and, except for written agreements, if any, executed and delivered simultaneously with or subsequent to the date of this Contract, constitutes the entire agreement of the parties relating to the subject matter hereof. This Contract may not be altered or amended except by a writing signed by the parties hereto. No waiver of any of the terms or conditions of this Contract shall be effective unless in writing and executed by the party to be changed therewith. No waiver of any condition or of the breach of any term, covenant, representation, warranty, or other provision hereof shall be deemed to be construed as a further or continuing waiver of any such condition or breach or a waiver of any other condition or of any breach of any other term, covenant, representation, warranty or other provision contained in this Contract.

6.6 Successors and Assigns: This Contract shall be binding upon and shall inure to the benefit of the parties hereto and their respective successors and assigns.

6.7 Governing Law; Consent to Jurisdiction: This Contract shall be governed by and construed and interpreted in accordance with the laws of the State of Florida. Each of the parties hereto (a) irrevocably submit itself to the exclusive jurisdiction of the Fifteenth Judicial Circuit Court in and for Palm Beach County, Florida for state actions and jurisdiction of the United States District Court for the Southern District of Florida, Palm Beach Division, for the purposes of any suit, action or other proceeding arising out of, or relating to, this Contract; (b) waives and agrees not to assert against any party hereto, by way of motion, as a defense of otherwise, in any suit, action or other proceeding, any claim that it is not personally subject to the jurisdiction of the above-named courts for any reason whatsoever; and (ii) to the extent permitted by applicable law, any claim that such suit, action or proceeding by any part hereto is brought in an inconvenient forum or that the venue of such suit, action or proceeding is improper or that this Contract or the subject matter hereof may not be enforced in or by such courts.

6.8 Third Party Beneficiary rights: This Contract shall create no rights or claims whatsoever in any person other than a party herein.

6.9 Severability: If any one or more of the provisions of the Contract shall be held to be invalid, illegal, or unenforceable in any respect, the validity, legality, and enforceability of the remaining provisions hereof shall not in any way be affected or impaired thereby.

6.10 Term: The term of this Agreement shall begin on May 31, 2022, and terminate on May 30, 2023. The Agreement may be renewed for three one year periods, upon approval of the Village Manager, provided there has been no change in the terms and pricing.

6.11 Public Records: VENDOR shall comply with Florida's Public Records Act, Chapter 119, Florida Statutes, and, if determined to be acting on behalf of the VILLAGE as provided under section 119.011(2), Florida Statutes, specifically agrees to:

(a) Keep and maintain public records required by the VILLAGE to perform the service.

(b) Upon request from the VILLAGE's custodian of public records or designee, provide the VILLAGE with a copy of the requested records or allow the records to be inspected or copied within a reasonable time at a cost that does not exceed the cost provided in Chapter 119, Florida Statutes, or as otherwise provided by law.

(c) Ensure that public records that are exempt or confidential and exempt from public records disclosure requirements are not disclosed except as authorized by law for the duration of this Contract and following completion of this Contract if the VENDOR does not transfer the records to the VILLAGE.

(d) Upon completion of this Contract, transfer, at no cost, to the VILLAGE all public records in possession of the VENDOR or keep and maintain public records required by the VILLAGE to perform the service. If the VENDOR transfers all public records to the VILLAGE upon completion of the Contract, the VENDOR shall destroy any duplicate public records that are exempt or confidential and exempt from public records disclosure requirements. If the VENDOR keeps and maintains public records upon completion of the Contract, the VENDOR shall meet all applicable requirements for retaining public records. All records stored electronically must be provided to the VILLAGE, upon request from the VILLAGE's custodian of public records or designee, in a format that is compatible with the information technology systems of the VILLAGE.

IF THE VENDOR HAS QUESTIONS REGARDING THE APPLICATION OF CHAPTER 119, FLORIDA STATUTES, TO THE VENDOR'S DUTY TO PROVIDE PUBLIC RECORDS RELATING TO THIS CONTRACT, CONTACT THE CUSTODIAN OF PUBLIC RECORDS OR DESIGNEE AT 561-584-8200 (ext. 8431), kwynn@vpsfl.org, OR BY MAIL AT VILLAGE OF PALM SPRINGS, 226 CYPRESS LANE, PALM SPRINGS, FL 33461.

6.12 Preparation: This Contract shall not be construed more strongly against either party regardless of who was more responsible for its preparation.

6.13 PALM BEACH COUNTY IG: In accordance with Palm Beach County ordinance number 2011-009, the VENDOR acknowledges that this Agreement may be subject to investigation and/or audit by the Palm Beach County Inspector General. The VENDOR has reviewed Palm Beach County ordinance number 2011-009 and is aware of its rights and/or obligations under such ordinance.

6.14 All notices required in this Agreement shall be sent by certified mail, return receipt requested, and sent to the addresses appearing on the first page of this Agreement.

6.15 The VILLAGE is exempt from payment of Florida State Sales and Use Tax. The VENDOR shall not be exempted from paying sales tax to its suppliers for materials used to fill contractual obligations with the VILLAGE, nor is the VENDOR authorized to use the VILLAGE'S Tax Exemption Number in securing such materials.

7. Indemnification. Regardless of the coverage provided by any insurance, VENDOR shall indemnify, save harmless and defend the VILLAGE, its agents, servants or employees from and against any and all claims, liability, losses and/or causes of action which may arise from any negligent act or omission of the VENDOR, its subcontractors, agents, servants, or employees during the course of performing services or caused by the goods provided pursuant to the Southeast Florida Governmental Purchasing Cooperative Group bid documents and subsequent contract and this Agreement.

12. Public Entity Crimes. As provided in Sections 287.132-133, Florida Statutes, as amended from time to time, by entering into the Contract Documents, VENDOR certifies that they, their affiliates, suppliers, subcontractors, and any other contractors who will perform hereunder, have not been placed on the convicted vendor list maintained by the State of Florida Department of Management Services within the thirty-six (36) months immediately preceding the date hereof.

13. E-verify. Pursuant to Section 448.095(2), Florida Statutes, beginning on January 1, 2021, VENDOR shall:

(a) Register with and use the E-Verify system to verify the work authorization status of all newly hired employees and require all subcontractors (providing services or receiving funding under this Agreement) to register with and use the E-Verify system to verify the work authorization status of all the subcontractors' newly hired employees;

(b) Secure an affidavit from all subcontractors (providing services or receiving funding under this Agreement) stating that the subcontractor does not employ, contract with, or subcontract with an unauthorized alien;

(c) Maintain copies of all subcontractor affidavits for the duration of this Agreement;

(d) Comply fully, and ensure all of its subcontractors comply fully, with Section 448.095, Florida Statutes;

(e) Be aware that a violation of Section 448.09, Florida Statutes (Unauthorized aliens; employment prohibited) shall be grounds for termination of this Agreement; and

(f) Be aware that if the Village terminates this Agreement under Section 448.095(2)(c), Florida Statutes VENDOR may not be awarded a public contract for at least 1 year after the date on which the Agreement is terminated and will be liable for any additional costs incurred by the Village as a result of the termination of the Agreement.

REMAINDER OF PAGE INTENTIONALLY LEFT BLANK

IN WITNESS WHEREOF, the VILLAGE and VENDOR have caused this Agreement to be executed the day and year shown above.

VILLAGE OF PALM SPRINGS, FLORIDA

By: _____
Bev Smith, Mayor

ATTEST

_____
Kimberly Wynn, Village Clerk

Approved as to form and legal sufficiency:

_____
Glen J. Torcivia, Village Attorney

VENDOR: **MORTON SALT, INC.**

By: Christi Richardson

Print Name: CHRISTI RICHARDSON

Title: INSIDE SALES

[Corporate Seal]

STATE OF FLORIDA)
COUNTY OF _____)

The foregoing instrument was acknowledged before me this _____ day of _____, by means of □ physical presence or online notarization by_____, as _____ of Morton Salt Inc., a corporation authorized to do business in the State of Florida, and who is personally known to me or who has produced the following _____ as identification.

_____
Notary Public, State of Florida
Commission No. _____

My Commission Expires: _____

CITY OF
Boca Raton

PURCHASING DIVISION
201 WEST PALMETTO PARK ROAD • BOCA RATON, FL 33432
PHONE (561) 393-7871
(FOR HEARING IMPAIRED) TDD (561) 367-7043
www.myboca.us

March 8, 2022

Morton Salt, Inc.
Gary Bartuska
444 West Lake Street
Chicago, IL 60606
Tel: 312.807.2887
Email: gbartuska@mortonsalt.com

SUBJECT: Bid No. 2021-024, Solar Salt (Bulk) Supply & Delivery
RE: Automatic Renewal No. 1

Dear Gary Bartuska:

The initial term of the above referenced contract expires on May 30, 2022. This correspondence is being sent to you as a courtesy reminding you that pursuant to item 5.01 “Contract Period and Renewal” of the above subject bid, this contract will automatically renew for another one year period from 5/31/2022 to 5/30/2023 at the same terms, conditions, pricing, and specifications currently in place.

The renewal information will be passed on to the SEFL Cooperative members.

Please contact me if you should have any questions. I can be reached by phone at, 561-393-7876 or by email at nphillips@myboca.us.

Sincerely,

Neil Phillips, Buyer

c: Bid 2021-024

Southeast Florida Governmental Purchasing Cooperative Group

CONTRACT AWARD

Please complete each of the applicable boxes and submit with bid documents, award notices and tabulations to rwhitcomb@greenacresfl.gov for placement on the NIGP SEFL website Cooperative contract page.

BID/RFP No. 2021-024

Description/Title: Solar Salt (Bulk) Supply & Delivery

Initial Contract Term: Start Date: 5/31/2021 End Date: 5/30/2022

Renewal Terms of the Contract: 3 (No. of Renewals) Renewal Options for 1 Year (Period of Time)

Renewal No. 1 Start Date: 5/31/2022 End Date: 5/30/2023

Renewal No. 2 Start Date: 5/31/2023 End Date: 5/30/2024

Renewal No. 3 Start Date: 5/31/2024 End Date: 5/30/2025

Renewal No. ___ Start Date: _____ End Date: _____

Extension / Renewal Note: Renewal 1 includes a price increase from $137.49/ton to $155.81/ton.

SECTION #1 VENDOR AWARD

Vendor Name: Morton Salt, Inc.

Vendor Address: 444 West Lake Street, Suite 3000, Chicago, IL 60606

Contact: Brian Jakosz

Phone: 630.861.2694 Fax: _____

Cell/Pager: _____ Email Address: bjakosz@mortonsalt.com

Website: _____ FEIN: 27-3146174

SECTION #2 AWARD/BACKGROUND INFORMATION

Award Date: _____ Resolution/Agenda Item No.: _____

Insurance Required: Yes X No _____

Performance Bond Required: Yes _____ No X

SECTION #3 LEAD AGENCY

Agency Name: City of Boca Raton

Agency Address: 201 West Palmetto Park Road, Boca Raton, FL 33432

Agency Contact: Neil Phillips Email nphillips@myboca.us

Telephone: 561.393.7876 Fax: _____

CITY OF
Boca Raton

PURCHASING DIVISION
201 WEST PALMETTO PARK ROAD • BOCA RATON, FL 33432
PHONE (561) 393-7871
(FOR HEARING IMPAIRED) TDD (561) 367-7043
www.myboca.us

April 1, 2022

Morton Salt, Inc.
Gary Bartuska
444 West Lake Street
Chicago, IL 60606
Tel: 312.807.2887
Email: gbartuska@mortonsalt.com

SUBJECT: Approval of Price Increase, Renewal 1
Bid No. 2021-024, Solar Salt (Bulk) Supply & Delivery

Dear Gary Bartuska,

This letter shall serve to advise that after careful review and consideration of your request for price increase, the City of Boca Raton, Lead Agency on behalf of all participating entities listed in the bid, hereby accepts your requested price adjustment from $137.49/ton to $155.81/ton.

In accordance with the provision of the above referenced term contract, said price increase shall become effective 5/31/2022 through 5/30/2023, for the first renewal period. Orders placed prior to May 31, 2022 shall be invoiced at the current prevailing prices.

The renewal information will be passed on to the SEFL Cooperative members.

Please do not hesitate to contact me via email, nphillips@myboca.us, should you have any questions.

Sincerely,

Neil Phillips
Buyer

c: Bid No. 2021-024

Southeast Florida Governmental Purchasing Cooperative Group

CONTRACT AWARD

Please complete each of the applicable boxes and submit with bid documents, award notices and tabulations to rwhitcomb@greenacresfl.gov for placement on the NIGP SEFL website Cooperative contract page.

BID/RFP No. 2021-024

Description/Title: Solar Salt (Bulk) Supply & Delivery

Initial Contract Term: Start Date: 5/31/2021 End Date: 5/30/2022

Renewal Terms of the Contract: 3 (No. of Renewals) Renewal Options for 1 Year (Period of Time)

Renewal No. 1 Start Date: 5/31/2022 End Date: 5/30/2023

Renewal No. 2 Start Date: 5/31/2023 End Date: 5/30/2024

Renewal No. 3 Start Date: 5/31/2024 End Date: 5/30/2025

Renewal No. ___ Start Date: _____ End Date: _____

Extension / Renewal Note: Initial one (1) year, automatically renewed thereafter for three, one-year renewal periods. Price adj. considered only when requested min. 90 days prior to renewal date.

SECTION #1 VENDOR AWARD

Vendor Name: Morton Salt, Inc.

Vendor Address: 444 West Lake Street, Suite 3000, Chicago, IL 60606

Contact: Brian Jakosz

Phone: 630.861.2694 Fax: _____

Cell/Pager: _____ Email Address: bjakosz@mortonsalt.com

Website: _____ FEIN: 27-3146174

SECTION #2 AWARD/BACKGROUND INFORMATION

Award Date: _____ Resolution/Agenda Item No.: _____

Insurance Required: Yes X No _____

Performance Bond Required: Yes _____ No X

SECTION #3 LEAD AGENCY

Agency Name: City of Boca Raton

Agency Address: 201 West Palmetto Park Road, Boca Raton, FL 33432

Agency Contact: Neil Phillips Email nphillips@myboca.us

Telephone: 561.393.7876 Fax: _____

City of Boca Raton
Tabulation for: 2021-024 Solar Salt (Bulk) Supply & Delivery
Opening Date: May 3, 2021 @ 3:00 PM
Tabulation is an indication of prices only and not a determination of the responsive, responsible bidders
denotes vendor calculation error

			Morton Salt, Inc.		
ITEM #	ENTITY NAME	ESTIMATED ANNUAL USAGE (E)	Freight Charge Per Location (F)	Unit Price (product only) (P)	Extened Price (F + P x E)
1	City of Boca Raton, WWTP	1,200 tons	$44.48	$93.01	$164,988.00
2	Town of Davie WTP	600 tons	$44.48	$93.01	$82,494.00
3	City of Lantana, WTP	1,200 tons	$44.48	$93.01	$164,988.00
4	City of Margate WTP, WWTP	750 tons	$44.48	$93.01	$103,117.50
5	City of Pembroke Pines	800 tons	$44.48	$93.01	$109,992.00
6	City of Tamarac, WTP	600 tons	$44.48	$93.01	$82,494.00
7	Village of Palm Springs	1,200 tons	$44.48	$93.01	$164,988.00
	Grand Total (Sum of Extended Prices for Lines 1 - 7)				**$873,061.50**
	Specify Mfg. /Name of Product being bid:		**Name of Product**		**Morton Bulk Solar**
	Bulk load Truck Delivery is:				**24** tons

COUNCIL APPROVAL PROCUREMENT RECOMMENDATION
TARGET AGENDA DATE: May 25, 2021

Subject: Solar Salt (Bulk) Supply & Delivery

Bid Number: 2021-024

Department: Utility Services

Procurement Method: Sealed Bid

Bid Opening Date: May 3, 2021
186 Notices Issued
1 No-Bid
1 Response

Award to: Responsive Responsible Bidder, Morton Salt, Inc., Chicago, IL

Contract Period: This is the first year of the contract award period. The City reserves the option to renew annually subject to appropriation of funds not to exceed a maximum of three (3) one year renewals.

Scope: This procurement provides for solar salt used in the wastewater treatment facility for the onsite production of sodium hypochlorite. Sodium hypochlorite is a disinfectant. This bid is for the Southeast Florida Governmental Purchasing Cooperative with the City of Boca Raton acting as the lead agency.

Budget: Purchases are estimated in the amount of $165,000 for each annual term.

Purchases will be made on an as needed basis (Indefinite Quantity) for each annual term, not to exceed the Department's budgeted funds, as approved or amended by the City Council each fiscal year.

Name of Bidder	Price per Ton
Morton Salt, Inc	$137.49

Approvals:

Buyer/Sr. Buyer/Asst. P.M.: Neil Phillips Digitally signed by Neil Phillips Date: 2021.05.11 13:06:20 -04'00'

Purchasing Manager: Lynn Kunkel Digitally signed by Lynn Kunkel Date: 2021.05.11 13:43:27 -04'00'

Financial Services Director: Linda C. Davidson Digitally signed by Linda C. Davidson Date: 2021.05.12 12:58:56 -04'00'

OMB Director: Sharon McGuire Digitally signed by Sharon McGuire Date: 2021.05.12 13:09:27 -04'00'

Deputy City Manager: Michael Woika Digitally signed by Michael Woika Date: 2021.05.12 14:14:42 -04'00'

CITY OF Boca Raton

PURCHASING DIVISION
201 WEST PALMETTO PARK ROAD • BOCA RATON, FL 33432
PHONE (561) 393-7871
(FOR HEARING IMPAIRED) TDD (561) 367-7043
www.myboca.us

May 26, 2021

Lisa Petramala, Inside Sales Manager
Morton Salt, Inc.
444 West Lake Street
Suite 3000
Chicago, IL 60606

Subject: Notification of Award of Bid No. 2021-024
Solar Salt (Bulk) Supply & Delivery

Dear Lisa Petramala:

You are hereby notified that “Morton Salt, Inc” is awarded the above subject bid.

The initial contract period will be from 5/31/2021 through 5/30/2022 and will automatically renew thereafter for three, one-year renewal periods as per Special Conditions Part V; Item No. 5.01 “Contract Period and Renewal”.

Services from the City of Boca Raton will be placed throughout the contract period on an as needed basis via a purchase order. All terms, conditions, pricing and specifications for the above subject bid shall apply.

Throughout the contract, your firm is required to maintain insurance coverage in accordance with Special Condition Part IV. Valid insurance is currently on file in the City’s Purchasing Division.

If you should have any questions, please do not hesitate to contact me by email at nphillipa@myboca.us.

Sincerely,

Neil Phillips
Buyer

c: 2021-024 file



SOUTHEAST FLORIDA GOVERNMENTAL PURCHASING COOPERATIVE GROUP

TO OUR PROSPECTIVE CONTRACTORS:

The attached Invitation for Bid or Request for Proposal represents a cooperative procurement for the Southeast Florida Governmental Purchasing Cooperative Group.

For the past several years, approximately forty-five (45) government entities have participated in Cooperative Purchasing in Southeast Florida. The Southeast Florida Governmental Purchasing Cooperative Group was formed in an effort to provide cost savings and cost avoidances to all entities by utilizing the buying power of combined requirements for common, basic items.

The Government Agencies participating in this particular procurement and their respective delivery locations are listed in the attached document.

Southeast Florida Governmental Purchasing Cooperative Group Procurement Operational Procedures:

- All questions concerning this procurement should be addressed to the issuing agency, hereinafter referred to as the "lead agency". All responses are to be returned in accordance with the instructions contained in the attached document. Any difficulty with participating agencies referenced in this award must be brought to the attention of the lead agency.
- Each participating governmental entity will be responsible for awarding the contract, issuing its own purchase orders, and for order placement. Each entity will require separate billings, be responsible for payment to the Contractor(s) awarded this contract, and issue its own tax exemption certificates as required by the Contractor.
- The Contract/purchase order terms of each entity will prevail for the individual participating entity. Invoicing instructions, delivery locations and insurance requirements will be in accordance with the respective agency requirements.
- Any reference in the documents to a single entity or location will, in fact, be understood as referring to all participating entities referenced in the documents and cover letter unless specifically noted otherwise.
- The awarded Contractor(s) shall be responsible for advising the lead agency of those participants who fail to place orders as a result of this award during the contract period.
- The Contractor(s) shall furnish the Lead Agency a detailed Summary of Sales semi-annually during the contract period. Sales Summary shall include contract number(s), contractor's name, the total of each commodity sold during the reporting period and the total dollar amount of purchases by commodity.
- Municipalities and other governmental entities which are not members of the Southeast Florida Governmental Purchasing Cooperative Group are strictly prohibited from utilizing any contract or purchase order resulting from this bid award. However, other Southeast Florida Governmental Purchasing Cooperative Group members may participate in this contract for new usage, during the contract term, or in any contract extension term, if approved by the lead agency. New Southeast Florida Governmental Purchasing Cooperative Group members may participate in any contract on acceptance and approval by the lead agency.
- None of the participating governmental entities shall be deemed or construed to be a party to any contract executed by and between any other governmental entity and the Contractor(s) as a result of this procurement action.

"WORKING TOGETHER TO REDUCE COSTS"

GENERAL TERMS AND CONDITIONS

These instructions are standard for all contracts for commodities or services issued through the City of Boca Raton Purchasing Division (hereafter referred to as "City"). The City may delete, supersede, or modify any of these standard instructions for a particular contract by indicating such change in any document related to the Invitation to Bid (ITB).

PART I INSTRUCTIONS TO BIDDERS:

1.01 STATEMENT OF PRECEDENCE OF GENERAL TERMS AND CONDITIONS: Any and all Special Conditions contained in this ITB that may be in conflict with these General Terms and Conditions shall have precedence over these General Terms and Conditions. If no changes or deletions to General Terms and Conditions are made in the Special Conditions, then the General Terms and Conditions shall prevail in their entirety.

1.02 GENERAL INFORMATION: These documents constitute the complete set of specification requirements and Bid forms. The Bid submittal, including all Bid sheets and attachments, must be filled in completely, executed and submitted. Bid Tabulations and Award Recommendations will be posted on the Purchasing Division Website at https://www.myboca.us/253/Tabulations-Award-Recommendations.

1.03 BIDDER NOTIFICATION: Notice of the ITB's will be emailed first to Bidders who have fully registered on the City's online registration system. The City maintains automated vendor e-mail lists for each specific Commodity Code for sending the ITB. Unregistered Bidders may request a notice of a particular Bid, which will be faxed or emailed within a reasonable time frame, for that Bid only. Neither the faxing or emailing of one ITB notice to vendor, or a Bid in return, will register a vendor on the City's registration system. Bidders may register on the City's website by visiting https://www.myboca.us/244/Supplier-Registration

1.04 SUBMISSION, RECEIPT, AND OPENING OF BIDS: No Bid shall be considered unless received **prior** to the Bid opening date and time. No Bidder shall submit more than one Bid response to the ITB. Multiple Bid responses from same Bidder shall be cause for City to reject all Bids from that Bidder.

Bidders are encouraged to submit their Bid document via electronic submission when permitted. Bidder's submitting a hard copy Bid in person or by mail should use the proposal forms provided by the City. Failure to use the City ITB forms may cause the Bid to be rejected. No Bid shall be accepted by facsimile, and therefore, any Bid submittals sent via facsimile shall be rejected by the City.

For hardcopy Bid submittals, the following applies: (1) Bid shall be submitted directly to the Purchasing Office at 201 W. Palmetto Park Road, Boca Raton, FL, 33432 in a sealed opaque envelope; (2) Any erasures or corrections on the ITB forms must be made in ink and initialed by Bidder; (3) All information submitted by the Bidder in the Bid document shall be printed, typewritten or handwritten in ink; (4) Bids shall be signed in ink; (5) When a particular ITB requires multiple copies of Bids, all must be included in a single envelope or package properly sealed and identified with the Bid number and name of Bidder on outside of the package.

Bids will be publicly opened in the Purchasing Office, City Hall, 201 W. Palmetto Park Road, Boca Raton, FL or other designated area. Bids will be opened, tabulated and made available for review by Bidders and the public in accordance with applicable regulations.

1.05 ADDENDUMS: The issuance of an addendum(s) is the only official method whereby interpretation, clarification, changes or additional information may be provided by the City. **It shall be the responsibility of each Bidder, during and prior to Bid submittal to visit the City of Boca Raton Purchasing Division Bidding Opportunities link** at **https://brpurch.ionwave.net/CurrentSourcingEvents.aspx**
or contact the Purchasing Division at 561-393-7871 to determine if addendums were issued to any particular ITB and to obtain such addendums from the Purchasing Division Online bidding website.

The City will make every effort to notify registered Bidders by email that an addendum has been made to the Bid. The City shall not be responsible for providing notice of addenda to potential Bidders who receive a Bid package from other sources. Bidders requesting addendums to be sent via U.S. mail or a mail service will be at Bidders' cost and the risk of misdelivery shall be Bidder's.

1.06 NO BIDS: If you do not intend to Bid, please indicate the reason and return a no-bid response to the City. Failure to Bid or return no Bid comments, prior to the Bid due date, may result in your firm being deleted from the City's Bidder registration system.

Part II DEFINITIONS:

2.01 BIDDING DEFINITIONS The City will use the following definitions in its General Terms and Conditions, Special Conditions, technical specifications, instructions to Bidders, addenda, and any other document used in the bidding process:

AWARD – The written notice from the Purchasing Manager of the acceptance of a Bid or proposal deemed by the proper authority of the City to be in the best interests of the City.
BID – a price and terms quote received in response to an ITB.
BIDDER/SUPPLIER – Person or firm submitting a Bid.
BUSINESS DAYS- Monday through Friday, excluding National Holidays
CALENDAR DAYS – Monday through Sunday, including National Holidays
CONTRACT – Any agreement, regardless of style or form, for the procurement of commodities, services, or construction.
CONTRACTOR – Successful Bidder or Proposer who is awarded a Purchase Order, award Contract, Blanket Purchase Order agreement, or Term Contract to provide goods or services to the City.
DAYS – Calendar Day, Monday through Sunday, including National Holidays
INVITATION TO BID (ITB) – All documents, whether attached or incorporated by reference, utilized for soliciting sealed Bids.
MAY – Denotes the permissive.
RESPONSIBLE BIDDER or Offeror – A person who has the capability in all respects to perform fully the contract requirements, and the tenacity, perseverance, experience, integrity, reliability, capacity, facilities, equipment, and credit which will assure good faith performance.
RESPONSIVE BIDDER – A person who has submitted a Bid that conforms in all material respects to the requirements set for in the ITB, or solicitation.
SHALL – Denotes the imperative.
SUCCESSFUL BIDDER - The best, qualified, Responsible, and Responsive Bidder to whom the City makes an award.

PART III BIDDING AND AWARD PROCEDURES:

3.01 BIDS FIRM FOR ACCEPTANCE: Bidder warrants, by virtue of bidding, that the Bid and the prices quoted in the Bid will remain valid for acceptance by the City for a period of ninety (90) days from the date of Bid opening.

3.02 AWARD AND REJECTION OF BIDS:

The City will award to the low Responsive Responsible Bidder whose product or service meets the terms, conditions, and specifications of the ITB as deemed in the City's best interest.

The City reserves the right to:
(1) accept or reject any or all Bids, part of Bids, and to waive minor irregularities or variations to specifications contained in Bids, and minor irregularities in the bidding process, and at its discretion, request a re-bid; (2) award the contract in accordance with the Special Conditions.

In determining the responsiveness of the offer and the responsibility of the Bidder, the following may be considered when applicable: (1) the ability, capacity and skill of the Bidder to perform as required; (2) whether the Bidder can perform promptly, or within the time specified, without delay or interference; (3) the character, integrity, reputation, judgment, experience and efficiency of the Bidder; (4) the quality of past performance by the Bidder; (5) the previous and existing compliance by the Bidder with related laws and ordinances; (6) the sufficiency of the Bidder's financial resources; (7) the availability, quality and adaptability of the Bidder's supplies or services to the required use; and (8) the ability of the Bidder to provide future maintenance, service or parts.

The City reserves the right to inspect all facilities of Bidders in order to make a determination as to the foregoing. Failure of Bidder to comply with the conditions set forth in the ITB may result in the Bid being considered non-responsive by the City.

3.03 PRICES QUOTED: Bidder shall deduct trade discounts, and quote firm net prices. If required, the Bidder shall give both unit price and extended total. In the case of a discrepancy in computing the amount of the Bid, the unit price quoted will govern. All prices quoted shall be F.O.B. destination, freight prepaid (Bidder pays and bears freight charges, Bidder owns goods in transit and files any claims), unless otherwise stated in Special Conditions. Each item must be Bid separately. No attempt shall be made by the Bidder to tie any item or items contained in the ITB with any other business with the City.

3.04 MISTAKES: Bidders are cautioned to examine all documents pertaining to the ITB. In the event of extension error(s), the unit price will prevail and the Bidder's total offer will be corrected accordingly. In the event of addition errors, the extended totals will prevail and the Bidder's total will be corrected accordingly.

3.05 TAXES: The City of Boca Raton is exempt from Federal and State taxes on direct purchase of tangible property. The Purchasing Office will supply the successful Bidder with an exemption certificate or it may be obtained from the City's website at https://www.myboca.us/239/Supplier-Information-Help. Vendors or Contractors doing business with the City of Boca Raton shall not be exempted from paying sales tax to their suppliers for materials to fulfill contractual obligations with the City, nor shall any Vendor/Contractor be authorized to use the City's Tax Exemption Number in securing such materials.

3.06 BUSINESS TAX RECEIPT: Bidder shall comply with Business Tax Receipt requirements for their business location. A copy of the business tax receipt or proof of exemption shall be submitted prior to awarding the Bid.

3.07 CONTRACTOR LICENSE: The Bidder Name identified on the Signature of Bidder form shall be fully licensed, to the extend required by Florida or Federal law, at time of Bid opening for type of work to be performed in order for their Bid to be considered. County or locally licensed contractors must be registered with the State of Florida DBPR Construction Industry Licensing Board at time of Bid opening. Copies of all applicable certificates, registrations and licenses must be submitted with the Bid and must be in the name of the Bidder shown on the Signature of Bidder Form. Should the Bidder not be fully licensed/certified, the Bid shall be rejected.

3.08 WARRANTIES OF USAGE: Any quantities listed in the ITB as estimated or projected are provided for tabulation and information purposes only. No warranty or guarantee of quantities is given or implied. The City reserves the right to increase or decrease the total quantities as necessary to meet actual requirements.

3.09 ALTERNATIVES/APPROVED EQUAL/DEVIATIONS: Unless otherwise specified, the mention of the particular manufacturer's brand name or number in the specifications does not imply that particular product is the only one that will be considered for purchase. This reference is intended solely to designate the type or quality of merchandise that will be acceptable. An alternate will be considered, but shall be equal to or better in quality to what was specified and must include descriptive literature and/or specifications. It is the Bidder's responsibility to provide adequate information regarding an alternate to ensure that the Bid meets the required criteria. If adequate information is not submitted with the Bid, the Bid may be rejected. The determination as to whether any alternate is equal or better or is not equal shall be made solely by the City of Boca Raton and such determination shall be final and binding upon all Bidders.

3.10 MINIMUM AND MANDATORY SPECIFICATIONS: The Bid specifications may include items that are considered minimum or required. If any Bidder is unable to meet, or exceed these items, and is of the opinion that the specifications are overly restrictive, Bidder must notify the Purchasing Division immediately. Such notification must be received in writing by the Purchasing Office prior to the deadline contained in the Special Conditions, for questions of a material nature, or prior to seven (7) business days before Bid due date, whichever occurs first. If no such notification is received prior to that deadline, the City will consider the technical specifications to be acceptable to all Bidders and all objections are waived by the Bidder.

3.11 SAMPLES AND DEMONSTRATIONS: Samples or inspection of product may be requested by the City to determine suitability. Samples shall be requested after the date of Bid opening, and if requested, shall be provided by Bidder to the City within seven (7) business days of request. Samples, when requested, must be furnished **free of expense** to the City and if not used in testing or destroyed, and upon request of the Bidder, will be returned within thirty (30) days of Bid award at Bidder's expense. When required, the City may request full demonstrations of units prior to award. When such demonstrations are requested, the Bidder shall respond promptly and arrange a demonstration at a location selected by the City. Failure to provide samples or demonstrations as specified by the City may result in rejection of the Bid.

3.12 PUBLIC RECORDS: Bidders are advised that the Sunshine Law and Public Records Act (Chapters 286 and 119, Florida Statutes, respectively) are applicable to the City. Information and materials received by the City in connection with an ITB response, as provided by Florida law, are public records.

3.13 DRUG FREE WORKPLACE PROGRAMS: Preference shall be given to business with Drug-Free Work Place programs. Whenever two or more Bids which are equal with respect to price, quality, and service are received by the City for the procurement of commodities or contractual services, the Bidder that provided proof to the City that it has a written Drug Free Work Place program shall be given preference in the award process.

3.14 LEGAL REQUIREMENTS: Bidder shall comply with applicable provisions of all federal, state, county laws, City of Boca Raton Code of Ordinances, rules and regulations and the City of Boca Raton Procurement Code. Lack of knowledge of any such provision, by any Bidder, shall not constitute a cognizable defense against the legal effect thereof. Pursuant to Chapter 2 (Administration), Article VIII (Lobbyist Registration), Sections 2-351 through 2-357, Palm Beach County, Florida, Code of Ordinances, any person who acts as a lobbyist must register with Palm Beach County's Central Lobbyist Registration Site, prior to engaging in lobbying activities before City of Boca Raton staff, boards, committees and / or the City Council, or any member thereof.
Lobbyist Registration Forms are available at:
https://secure.co.palm-beach.fl.us/lrs/Main/Login.aspx?ReturnUrl=%2flrs%2f

3.15 PROCUREMENT CODE: A copy of the Procurement Code is available for your review at https://www.myboca.us/239/Supplier-Information-Help.

3.16 PUBLIC ENTITY CRIMES: In accordance with the provisions of paragraph (2)(a) of Section 287.133, Florida Statues, a person or affiliate who has been placed on the convicted vendor list following a conviction for a public entity crime may not submit a Bid on a contract to provide any goods or services to a public entity, may not submit a Bid on a contract with a public entity for the construction or repair of a public building or public work, may not submit Bids on leases of real property to a public entity, may not be awarded or perform work as a contractor, supplier, subcontractor, or consultant under a contract with any public entity, and may not transact business with any public entity in excess of the threshold amount provided in Section 287.017, for CATEGORY TWO for a period of 36 months from the date of being placed on the convicted vendor list.

3.17 CODE OF ETHICS/CONE OF SILENCE: If any Bidder is found to be in violation of the Code of Ethics of the City of Boca Raton and/or the State of Florida with respect to this Bid, such Bidder may be disqualified from performing the work described in this Bid or from furnishing the goods or services for which the Bid is submitted and may be further disqualified from bidding on any future Bids for work or for goods or services for the City of Boca Raton. A copy of the City and State Ethics Codes is available at the office of the City Clerk, City of Boca Raton, 201 W. Palmetto Park Road, Boca Raton, Florida.

Bidder shall comply with all Florida laws relating to conflicts of interest, including Section 112.313, Florida Statutes and shall under appropriate circumstances, submit Form 3A, Interest in Competitive Bid for Public Businesses. This form may be obtained from the City of Boca Raton website at:
https://www.myboca.us/230/Purchasing-Division

The Palm Beach County Lobbyist Registration Ordinance (Sections 2-351 through 2-357 of the Palm Beach County Code of Ordinances) is applicable in the City of Boca Raton. Section 2-355 of the Palm Beach County Lobbyist Registration Ordinance includes a "Cone of Silence" provision that limits communication during the City's procurement process in regard to this Bid. You are required to comply with Section 2-355 of the Palm Beach County Lobbyist Registration Ordinance during this procurement process. The complete Palm Beach County Lobbyist Registration Ordinance, including Section 2-355, may be found on the Palm Beach County Ethics website at http://www.palmbeachcountyethics.com/pdf/Lobbyist_Registration_Ordinance-2012.pdf.

3.18 NON-COLLUSION: Bidder certifies that this Bid is made without prior understanding, agreement, or connection with any corporation, firm or person submitting a Bid for the same materials, services, supplies, or equipment and is in all respects fair and without collusion or fraud. No premiums, rebates or gratuities permitted; either with, prior to or after any delivery of material or provision of services. Any violation thereof may result in contract cancellation, return of materials or discontinuation of services and may be removed from the vendor Bid list(s).

3.19 USE OF OTHER GOVERNMENTAL CONTRACTS: The City reserves the right to reject any part or all of any Bids received and utilize other available governmental contracts, as provided by law, if such action is in its best interest.

PART IV INSURANCE

4.01 INSURANCE: The Contractor shall assume full responsibility and expense to obtain all necessary insurance as required by the City. The Contractor shall provide to the Purchasing Division original certificates of current coverage meeting all such requirements and specifications prior to engaging in any activities under this contract. The certificates must list the City as an ADDITIONAL INSURED and shall provide no less than thirty (30) days written notice to the City of cancellation or material change. Further modification of the insurance requirements may be made if circumstances change or adequate protection of the City is not presented.

4.02 INDEMNITY/HOLD HARMLESS AGREEMENT: Contractor shall, in addition to any other obligation to defend, indemnify the City of Boca Raton Florida and to the fullest extent permitted by law, indemnify and hold harmless the City of Boca Raton, its officials, and employees, from and against all claims, actions, liabilities, losses (including economic losses), and costs arising out of any bodily injury, sickness, disease or death, or injury to or destruction of tangible property including the loss of use resulting therefrom, or any other damage or loss caused by any negligent act, error or omission, recklessness, or intentionally wrongful conduct of the Contractor, any subcontractor, or anyone directly or indirectly employed by any of them. The indemnification obligations hereunder shall not be limited by any limitation on the amount, type of damages, compensation or benefits payable by or for the Contractor or any subcontractor under any contract or agreement or under worker's compensation acts; disability benefit acts, other employee benefit acts or any statutory bar. Any cost of expenses, including attorney's fees, appellate, bankruptcy or defense counsel fees incurred by the City of Boca Raton to enforce this Indemnification clause shall be borne by the Contractor. The obligations contained in this Indemnification Clause shall continue indefinitely and survive the cancellation, termination, expiration, lapse or suspension of this agreement.

This provision shall not be deemed to waive any of the rights or immunities accorded to the City by section 768.28, Florida Statutes, or any other applicable law.

PART V PURCHASE ORDER AND CONTRACT TERMS:

5.01 METHOD OF ORDERING: Items shall be ordered via an individual purchase order.

5.02 DELIVERY: Time will be of the essence for any orders placed as a result of this ITB. The City reserves the right to cancel any orders, or part thereof, without obligation, if delivery is not made in accordance with the schedule specified in the ITB or as otherwise accepted by the City.

Deliveries shall be made in accordance with City of Boca Raton security procedures.

5.03 ACCEPTANCE, CONDITION, AND PACKAGING: The material delivered in response to a Bid award shall remain the property of the Bidder until a physical inspection is made and the material accepted to the satisfaction of the City. The material must comply fully with the terms of the Bid, be of the required quality, new, and the latest model, unless specified in the Special Conditions. All containers shall be suitable for storage and shipment by common carrier, and all prices shall include standard commercial packaging. The City will not accept substitutes of any kind. Any substitutes or material not meeting specifications will be returned at the Bidder's expense. Payment will be made only after City receipt and satisfactory acceptance of materials or services.

5.04 COMPLIANCE TO SPECIFICATIONS, LATE DELIVERIES: Items offered may be tested for compliance to Bid specifications. Items delivered which do not conform to Bid specifications may be rejected and returned at Contractor's expense. Any violation resulting in contract termination for delivery of items not conforming to specifications, or late delivery may result in enforcement of all remedies in law or equity or as specified in the City's Procurement Code.

5.05 CHANGES / MODIFICATIONS: No negotiations, decisions, or actions shall be initiated or executed by the Contractor as a result of any discussions with any City employee that changes or modifies the requirements of the ITB and or Contract. Only those communications, which are in writing from an authorized representative of the City and the Contractor, in accordance with the City of Boca Raton Procurement Code and or purchasing operating procedures, may vary the terms of the written Bid or contract.

5.06 PAYMENT TERMS, CASH DISCOUNTS AND INVOICES: Payment terms, unless otherwise stated in this ITB, will be considered to be net 30 days after the date of satisfactory delivery at the place of acceptance and receipt of correct invoice at the office specified, whichever occurs last. Bidder may offer cash discounts for prompt payment but they will not be considered in determination of award. If a Bidder offers a discount, it is understood that the discount time will be computed from the date of satisfactory delivery at the place of acceptance, and receipt of a correct invoice at the office specified, whichever occurs last.

Partial billing will not be accepted unless authorized specifically in the Special Conditions.

Invoices must be submitted against each individual purchase order. Invoices without a correct and valid purchase order number may not be processed for payment.

Request for payment for any and all invoice(s) that may arise as a result of a contract or purchase order issued pursuant to this Bid specification shall minimally meet the following conditions to be considered as a valid payment request:

(a) Timely submission of a properly certifiable invoice(s), in strict accordance with the price(s) and delivery elements as stipulated in the contract or purchase order document, submitted to:
invoices@myboca.us or The City of Boca Raton, Financial Services Department
City Hall, 201 W. Palmetto Rd, Boca Raton, FL 33432
PH: 561-393-7727

(b) All invoices submitted shall: consist of an original and one (1) copy; clearly reference the subject contract or purchase order number; provide a sufficient salient description to identify goods or service for which payment is requested; contain the date of delivery; contain an original or legible copy of signed delivery receipt including both manual and printed name of a designated City of Boca Raton employee or authorized agent who received the goods; and identify invoice as "partial" or "final".

(c) The invoice shall contain the Bidder's Federal Employer Identification number and clearly reference the Contractor's Business name and address for payment.

5.07 SAFETY STANDARDS: Manufactured items, fabricated assemblies and on-site contractor services shall comply with all applicable federal, state and local requirements. For on-site contractor services, the City reserves the right to request documentation of contractor compliance with OSHA standards to include but not be limited to: required employee safety & health training, written safety and health programs, provision of required personal protective equipment (PPE), and/or provision and use of required atmospheric monitoring equipment. Hazardous chemicals must be accompanied by a Material Safety Data Sheet (MSDS), as required by the Occupational Safety and Health Act (OSHA) of 1970; as amended, and any other applicable federal, state and local regulations.

5.08 ASBESTOS STATEMENT: All material supplied must be 100% asbestos free. Bidder, by virtue of bidding, certifies that if awarded any portion of the ITB, Bidder will supply only material or equipment that is 100% asbestos free.

5.09 OTHER GOVERNMENTAL ENTITIES: When there is sufficient capacity or quantities available, awarded Bidder may provide to other governmental agencies, so requesting, the products or services awarded in accordance with the terms and conditions of the ITB and resulting contract. Prices shall be F.O.B. Destination to the requesting agency. Each governmental entity allowed to use this contract shall do so independent of any other governmental entity.

5.10 INDEPENDENT CONTRACTOR: Contractor undertakes performance of the services as an independent contractor and shall be wholly responsible for the methods of performance. The Contractor, nor the sub-contractor or their employees or their agents, shall not receive any City benefits, stipend or privileges afforded to City employees.

5.11 ASSIGNMENT: The City and Contractor each binds itself and its directors, officers, partners, successors, executors, administrators, assigns and legal representatives to the other party to this contract. Any assignment, sale, pledge or conveyance of this contract by Contractor must be previously approved in writing by the City.

5.12 NON EXCLUSIVE CONTRACT: Contractor agrees and understands that the contract shall not be construed as an exclusive arrangement and further agrees that the City may, at any time, secure similar or identical services at its sole option.

5.13 TERMINATION FOR CAUSE: If, through any cause, the Contractor shall fail to fulfill in a timely and proper manner its obligations under this ITB/Contract, or if the Contractor shall violate any of the provisions of this contract, the City may, upon written notice to the Contractor, terminate the right of the Contractor to proceed under this contract, or with such part or parts of the contract as to which there has been default, and may hold the Contractor liable for all damages caused to the City by reason of such default and termination. In the event of such termination, any completed services performed by the Contractor under this contract shall, at the option of the City, become the City's property and the Contractor shall be entitled to receive equitable compensation for any work completed to the satisfaction of the City. The Contractor, however, shall not be relieved of liability to the City for damages sustained by the City by reason of any breach of the contract by the Contractor, and the City may withhold any payments to the Contractor for the purpose of setoff, until such time as the amount of damages due to the City from the Contractor can be determined.

5.14 TERMINATION FOR CONVENIENCE: The City reserves the right, in its best interest as determined by the City, to cancel contract in whole or in part by giving written notice to the Contractor thirty (30) days prior to the effective date of such cancellation. In the event of such termination, any completed services performed by the Contractor under this contract shall, at the option of the City, become the City's property and the Contractor shall be entitled to receive equitable compensation for any work completed to the satisfaction of the City.

5.15 TERMINATION FOR GOVERNMENTAL NON-APPROPRIATIONS: The obligation of the City for payment to a Contractor is limited to the availability of funds appropriated in a current fiscal period. Continuation of the contract into a subsequent fiscal period is subject to appropriation of funds, unless otherwise authorized by law, and contract, and shall be terminated without penalty to the City and without any default upon the last day in which funds were last appropriated.

5.16 RECORDS/AUDIT: The Contractor shall maintain during the term of the contract all books of account, reports and supporting records in accordance with generally accepted accounting practices and standards for records directly related to this contract for a minimum of (1) year beyond the last day of the contract term. The form of all records and reports shall be subject to the approval of the City. The Contractor agrees to make available for review and audit to the City and or City Consultant, during normal business hours and in Broward, Miami Dade or Palm Beach Counties, all books of account, reports and supporting records relating to this contract for the duration of the contract and for one year following the last day of the contract.

5.17 POST SALE AUDIT ADJUSTMENT: All items sold to the City of Boca Raton as a result of this Bid are subject to Post Sale Audit Adjustment. In the event that an audit reveals the vendor has not honored quoted pricing, price lists or discount structures, vendor will be liable and will be invoiced and collected with (30) days for any and all overstated charges. Failure to remit may result in termination of the contract.

5.18 PERMITS, TAXES, LICENSES: The successful Contractor shall, at his own expense, obtain all necessary permits, pay all licenses, fees and taxes, which comply with all local ordinances, state and federal laws, rules and regulations applicable to business to be carried on under this contract. City of Boca Raton permit fees will be waived by the City; however, fines and penalties will be assessed based upon standard fee structure.

5.19 CONTRACTOR REGISTRATION: If applicable, the Contractor must first register with the Department of State of the State of Florida, in accordance with Florida State Statutes, prior to entering into a contract with the City. Contractors awarded work involving a permit shall register with the City of Boca Raton License Office prior to performing the work.

5.20 PATENTS AND ROYALTIES: The Contractor, without exception, shall indemnify and save harmless the City and its employees from liability of any nature and kind, including cost and expenses for or on account of any copyrighted, patented or un-patented invention, process, or article manufactured or used in the performance of the contract, including its use by the City. If the Contractor uses any design, device, or materials covered by letters, patent or copyright, it is mutually agreed and understood without exception that the Bid prices shall include all royalties or costs arising from the use of such design, device, or materials in any way involved in the work.

5.21 LAWS/ORDINANCES: The Contractor shall observe and comply with all Federal, state, county, local and municipal laws, ordinances rules and regulations that would apply to this contract. Further, Contractor acknowledges and without exception or stipulation shall be fully responsible for complying with the provisions of the Immigration Reform and Control Act of 1986 as located at 8 U.S.C. 1324, et seq. and regulations relating thereto, as either may be amended. Failure by the awarded firm(s) to comply with the laws referenced herein shall constitute a breach of the award agreement and the City shall have the discretion to unilaterally terminate said agreement.

5.22 COMPLIANCE WITH CITY OF BOCA RATON ORDINANCE: Awarded vendor shall comply with all applicable Boca Raton City Ordinances, including, but not limited to, 16-57, "Display of Identification on Trucks and Related Commercial Vehicles", which mandates vehicles be designated by lettering of two inches minimum size on either side of the vehicle indicating the name and address of the person owning or operating the same for commercial use.

5.23 GOVERNING LAW AND VENUE: Contracts shall be governed by the laws of the State of Florida. Any and all legal action necessary to enforce the contract will be held in Palm Beach County and the Agreement will be interpreted according to the laws of Florida. By entering into this award, Contractor and City hereby expressly waive any rights either party may have to a trial by jury of any civil litigation related to this award.

5.24 NON-DISCRIMINATION: The City of Boca Raton is an equal opportunity employer and prohibits discrimination on the basis of race, color, religion, national origin, sex, age, marital status, disability, and/or political affiliation in all aspects of its personnel policies and procedures, programs, practices and operations.

5.25 CITY POLICIES: Awarded contractor shall comply with the City of Boca Raton Equal Employment Opportunity Policy, Violence in the Workplace Policy, Drug and Alcohol Free Workplace Policy, General Complaint Policy and Sexual Harassment Policy. Copies of these policies may be obtained from the City of Boca Raton Human Resources Division. Violations of these policies may result in cancellation of the contract.

5.26 ADDITIONAL DISCOUNTS: Should sales promotions occur during the term of the contract that lower the price of the procured item or items, the vendor shall extend to the City the lower price offered by the manufacturers or Vendors on any such promotional item. Further, any price decreases effectuated during the contract period by reason of market change, quantity discounts, or otherwise, should be passed on to the City of Boca Raton.

5.27 PUBLIC RECORDS:

A. The City of Boca Raton is a public agency subject to Chapter 119, Florida Statutes. A Contractor providing services shall comply with Florida's Public Records Law and therefore shall comply with Section 119.0701, Florida Statutes. Specifically, Contractor shall:

1) Keep and maintain all public records related to the performance of the services.

2) Upon request from the City's custodian of public records, provide the City with a copy of the requested records, or allow the records to be inspected or copied within a reasonable time, at a cost that does not exceed that provided in chapter 119, Florida Statutes, or as otherwise provided by law.

3) Ensure that public records that are exempt or confidential and exempt from public records disclosure requirements are not disclosed except as authorized by law for the duration of the contract term and following completion of the contract.

4) Upon completion or other termination of the contract, keep and maintain the public records required by the City to perform the services. Contractor shall meet all applicable requirements for retaining public records set out in Florida law.

5) In addition to maintaining the records pursuant to Paragraph Number 4 above, provide to the City all records that were stored electronically by Contractor, upon request from the City's custodian of public records, in a format that is compatible with the information technology systems of the CITY.

B. The failure of Contractor to comply with the provisions set forth in this Article, or to comply with the City's request for records, shall constitute a default and breach of this Agreement, and the City shall, in its discretion, pursue any and all remedies against Contractor provided for under this contract or at law.

C. IF CONTRACTOR HAS QUESTIONS REGARDING THE APPLICATION OF CHAPTER 119, FLORIDA STATUTES, TO CONTRACTOR'S DUTY TO PROVIDE PUBLIC RECORDS RELATING TO THIS CONTRACT, CONTACT THE CUSTODIAN OF PUBLIC RECORDS AT 561-393-7740, BRCITYCLERK@MYBOCA.US, CITY HALL, CITY CLERK, 201 W. PALMETTO PARK ROAD, BOCA RATON, FL 33432.

5.28 SCRUTINIZED COMPANIES

A. Pursuant to Section 287.135, Contractor is ineligible to enter into, or renew, this Contract if Contractor is on the Scrutinized Companies that Boycott Israel List (as identified in Section 215.4725, Florida Statutes), or is engaged in a boycott of Israel.

B. By entering into this Contract, Contractor certifies that Contractor is not on the Scrutinized Companies that Boycott Israel List, and that Contractor is not engaged in a boycott of Israel.

C. Contractor shall notify the City if, at any time during the term of this Contract, Contractor is placed on the Scrutinized Companies that Boycott Israel List, or that Contractor is engaged in a boycott of Israel. Such

notification shall be in writing and provided by Contractor to the City within ten (10) days of the date of such occurrence.

D. In the event the City determines, using credible information available to the public, that Contractor has submitted a false certification or Contractor is found to have been placed on the Scrutinized Companies that Boycott Israel List or engaged in a boycott of Israel, the City may, in its sole discretion, terminate this Contract and seek a civil penalty, and other damages and relief, against Contractor, pursuant to Section 287.135, Florida Statutes. In addition, the City may pursue any and all other legal remedies against Contractor.
E. Contractor shall not seek damages, fees, or costs against the City in the event the City terminates the Contract pursuant to this provision.

5.29 E-VERIFY

By entering into this Contract, the Contractor becomes obligated to comply with the provisions of Section 448.095, Fla. Stat., "Employment Eligibility." This includes but is not limited to utilization of the E-Verify System to verify the work authorization status of all employees hired after January 1, 2021 (as well as contractual employees whose contract is renewed after January 1, 2021), and requiring all subcontractors to provide an affidavit attesting that the subcontractor does not employ, contract with, or subcontract with, an unauthorized alien. Failure to comply will lead to termination of this Contract, or if a subcontractor knowingly violates the statute, the subcontract must be terminated immediately. Any challenge to termination under this provision must be filed in the Circuit Court no later than 20 calendar days after the date of termination. If this Contract is terminated for a violation of the statute by the Contractor, the Contractor may not be awarded a public contract for a period of 1 year after the date of termination. Should Contractor violate the requirements of Section 448.095, Fla. Stat., they shall be liable for any additional costs incurred by the City as a result of the termination of the Contract.

SPECIAL CONDITIONS

PART I INSTRUCTION TO BIDDERS:

1.01 INSTRUCTIONS TO BIDDERS

The City of Boca Raton, Florida is seeking Bids from qualified Bidders for Solar Salt (Bulk) Supply and Delivery, Bid Number 2021-024.

The purpose of this bid is to establish a term contract on behalf of the NIGP Southeast Florida Governmental Purchasing Cooperative group, for the supply and delivery of Sodium Chloride, Solar Salt to be ordered on an as needed basis.

This Bid package contains all of the information and documents necessary to prepare and submit a responsive Bid. Bidders are cautioned to read all of the documentation provided. Bidder will be responsible for complying with all requirements identified herein.

The City of Boca Raton shall not be responsible for the content of Bid response packages or addenda received from any third party source.

Due date and time for Bid response: **Bid shall be received prior to 3:00 p.m. local time (Boca Raton, FL) on May 3, 2021**.

HOW TO RESPOND TO THIS BID

1. Either of the following two options may be utilized by a Bidder to submit a sealed Bid response.

   A. Submission of the Bid response by electronic transmission using the City's electronic bid system located at https://brpurch.ionwave.net/Login.aspx. In order to submit the bid electronically: (1) the Bidder must print the Bid documents; (2) all required bid data/information must be added to the Bid documents and included forms; (3) an individual authorized to contractually bind the Bidder must sign all required Bid forms; (4) the entire Bid response and all signed forms must be scanned to PDF format; and (5) the Bidder shall upload the scanned Bid response and signed Bid forms to the City's electronic bid system pursuant to the directions in the electronic bid system. Please note that the maximum file size is 100 MB for an uploaded file.

   Bidder's response shall not contain any alteration to the Bid documents that were posted by the City other than entering data, information and signatures required by the Bid in the spaces provided for such data, information and signatures, and by including attachments as necessary. By submission of an electronic Bid response, Bidder affirms that a complete set of Bid documents was obtained from the City's electronic bid system and that Bidder made no alteration of any kind or nature to the Bid documents other than entering data, information and signatures required by the Bid or by including attachments as part of the Bid response.

   Electronic Bid submissions are only permitted to be upload prior to 3:00 p.m. on the Bid due date. Any attempt to upload a late Bid response at or after 3:00 p.m. on the Bid due date will be rejected by the City's electronic bid system.

   It is highly recommended that Bidders submit their Bid response as an electronic submission using the City's electronic Bid system.

   B. Delivery of the Bid response as a sealed paper Bid response.
   The City will receive Bids at the following address:

   City of Boca Raton
   City Hall / Attn: Purchasing Division
   201 W. Palmetto Park Road
   Boca Raton, FL 33432

   i. The envelope shall be identified on the outside with the Bidder's name and address, and the notation: "Bid No. 2021-024, Cartridge Filters for Potable Water".

ii. Bidders are instructed to enter building through the front entrance door (North side of City Hall Building) when hand delivering bids.

iii. Check in at the reception area and identify that you have a Bid package for delivery to the Purchasing Division. A representative from the Purchasing Division will be contacted to receive the Bid submittal or will already be at that reception area. The Purchasing Division representative will place a date/time stamp on your Bid submittal package to confirm receipt is prior to the closing date and time.

Please note: The City may have special procedures for COVID-19 that person delivering the Bid will be required to follow (i.e. masks must be worn for entrance to City Hall)

iv. Bidders are responsible for verifying that they have received and viewed all bid pages. Bidders are requested to submit an original and no copy of their bid document for review by the City.

2. **A Bid response submitted either by upload or by hand-delivery after the specified due date and time will be rejected**. As indicated above, the City's electronic bid system will not accept Bid responses that are attempted to be submitted after the due date/time. As to a hand-delivered Bid response, it will be rejected and returned unopened when the Bidder attempts to hand-deliver it or it will be rejected when it is attempted to be hand-delivered by a third party mail service. If the Bid response is delivered after the required date and time and a City representative is not available to reject it, that Bidder will be notified that the Bid response was submitted after the required/specified date and time and the City will return the Bid response, as long as the Bidder name and address is available on the Bid response package.

   The names of the Bidders who have submitted a Bid response will be made available on the Purchasing Division Web page https://www.myboca.us/253/Tabulations-Award-Recommendations

3. A Bidder's Bid response (either uploaded or hand-delivered) shall be signed only by an individual authorized by the Bidder to both execute such bids and to bind the Bidder. For electronic submissions, the signature included shall be deemed an original signature, shall be binding on the Bidder, and shall be relied upon by the City as a document authorized by the Bidder for all purposes.

Online real-time viewing of sealed Bid openings, in lieu of physical assembly for viewing, will proceed in the same manner as procurement ordinarily performs such openings as detailed in Exhibit A, as attached herein.

1.02 INFORMATION

Any questions by prospective Bidders should be directed to Neil Phillips, Buyer, Purchasing Division, by email at nphillips@myboca.us, who is authorized only to direct inquiries to various portions of the Bid so Bidders may read and interpret such for themselves. No authorization is allowed by any City of Boca or Purchasing Division personnel to interpret, or give information as to Bid requirements in addition to that, which is contained in the written Bid document. Interpretations of the Bid or additional information as to its requirements, where necessary, shall be communicated to Bidders only by written addendum after written requests have been received from the Bidder. **In conjunction with General Term and Condition number 3.10, written requests must be received seven (7) business days prior to the Bid closing date.**

Any ambiguities, inconsistencies or questions should be brought to the attention of the City by submitting an email to nphillips@myboca.us with reference to the Bid number and title in the subject line.

PART II DEFINITIONS:

2.01 DEFINITIONS / ACRONYMS

- NIGP: National Institute of Governmental Purchasing
- Co-Op: Southeast Florida Governmental Purchasing Cooperative group
- Lead Agency: City of Boca Raton
- ANSI: American National Standards Institute
- MFG: Manufacturer
- NSF: National Science Foundation
- Entity: Throughout this document, Entity often refers to a participating governmental agency of the Southeast Florida Governmental Purchasing Cooperative Group.

- Public Entity: “Public entity” shall mean one of the following: A local agency, state agency, federal agency, county, municipality, public school/university, port authority, drainage district or water district.

PART III BIDDING AND AWARD PROCEDURES:

3.01 F.O.B. POINT

All prices quoted shall be F.O.B. destination, freight prepaid (Bidder pays and bears freight charges, Bidder owns goods in transit and files any claims). The successful Bidder shall be fully responsible for any and all travel expenses and/or delivery/transport charges to and from destination. Exact delivery point will be indicated on the purchase order.

3.02 QUALIFICATION OF BIDDERS

This bid shall be awarded only to a responsive and responsible Bidder, qualified to provide the work specified and meets or exceeds the qualification requirements listed below. The Bidder should submit the following information with their bid package to be considered responsive in order for the City to fully evaluate the firm’s qualifications. If information is not included, the City reserves the right to solicit Bidder for the submission of this information. Failure by Bidder to provide the omitted information within the specified time frame(s) communicated in writing may result in Bidder’s bid response being considered non-responsive and thereby rejected. Response for each qualification requirement should be submitted by use of the City provided Qualification of Bidders Form.

A. Bidder shall have a minimum of three (3) satisfactory references for similar size Public Entity accounts for the product bid. Similar size shall mean a minimum of 1,200 tons per year. References shall be satisfactorily completed within the time range of 3/1/2017 through 3/1/2021.

B. The City will not award a bid to any Bidder who cannot provide evidence that their Firm Name identified on the “Signature of Bidder” form has been in business for a minimum of one (1) year, excluding any affiliate or parent companies. Evidence of a minimum of one (1) year shall be verified in accordance with filing date by the State of Florida or the Firm’s State of Origin of Bidder’s firm.

3.03 COMPETENCY OF BIDDERS

Pre-award inspection of the Bidder's facility may be made prior to award of Contract. Bids will be considered only from firms which are regularly engaged in the business of providing the goods and/or services as described in this Bid and who can provide evidence that they have established a satisfactory record of performance to ensure that they can satisfactorily execute the services under the terms and conditions stated herein. The term "equipment and organization" as used herein shall be construed to mean a fully equipped and well-established company in line with the best business practices in the industry and as determined by the proper authorities of the City.

3.04 BACKGROUND INFORMATION

The City reserves the right, before awarding the Contract to require a Bidder to submit such evidence of his/her qualifications as it may deem necessary and may consider any evidence available to it as to the financial, technical and other qualifications and abilities of a Bidder, including past performance (experience) with the City.

3.05 REFERENCES

As part of the Bid evaluation process, the City may conduct an investigation of references including a record check of consumer affairs complaints. Bidder's submission of a Bid constitutes acknowledgment of the process and consent to investigate. City is the sole judge in determining Bidder's qualifications.

3.06 TERMS, CONDITIONS AND SPECIFICATIONS

With the exception of submitting an “Alternate” in accordance with item 3.09 of the “General Terms and Conditions”, no additional terms, conditions or specifications included with Bidder’s bid response shall be evaluated or considered and any and all such additional terms, conditions and specifications shall have no force and effect and are inapplicable to this Bid. If submitted either purposely through intent or design or inadvertently separately in transmittal letters, vendor quotation/proposal forms, specifications, literature, price lists or warranties, it is understood and agreed the general conditions, special conditions and specifications in this Bid are the only terms applicable to this Bid and Bidder’s authorized signature attests to this.

3.07 METHOD OF AWARD

Award recommendations shall be subject to the approval of the City Manager, City Manager designee or City Council as provided for in the City’s Code of Ordinances. Award recommendations to be posted on the City of Boca Raton Purchasing Division Notice Board for a period of three business days prior to making the award.

The City reserves the right to award this bid to the lowest responsive, responsible Bidder based on the grand total for all items on the bid or make an award to the lowest responsive and responsible Bidder on an Entity by Entity basis, whichever is deemed to be in the best interest of the City, acting as lead agency on behalf of all other participating Entities.

Bidder is required to bid on all items.

3.08 POST AWARD MEETING

Within seven (7) days after receipt of notification of bid award, successful Bidder shall discuss with each agency's City representative the following:

- Ordering procedures
- Scheduling of services (delivery notifications, hours of delivery for each agency)
- Contact lists for each agency.
- Staff assigned to City contract.

Project Manager for each Entity will arrange for the post award meeting.

City of Boca Raton Project Manager: Ed Catalano, Wastewater Plant Supervisor, ecatalano@myboca.us, 561-338-7332.

3.09 TIE BID RESPONSES

Tie bids shall be made in accordance with item 3.13 of the general conditions. In the event none or multiple firms comply with the Drug-Free Work Place in accordance with Florida Statute 287.087 and the tie bid remains, the following shall apply.

A. Whenever two Bid Responses, which are equal with respect to price and are deemed the low responsive and responsible Bidders are received by the City for the procurement of commodities or contractual services, the City will make the decision by way of a coin toss to determine the single awarded Bidder. Notice of using a coin toss to determine the award will be provided to the two tie Bidders.

B. Whenever three or more Bid Responses which are equal with respect to price and are deemed the low responsive and responsible Bidders are received by the City for the procurement of commodities or contractual services, the City will make the decision by way of a drawing to determine the single awarded Bidder. Notice of using a drawing to determine the award will be provided to the three or more tie Bidders.

PART IV INSURANCE:

4.01 INSURANCE REQUIRED (Proof of ability to obtain insurance to be submitted with bid document.)

4.02 Commercial General Liability

Contractor agrees to maintain Commercial General Liability at a limit of liability not less than **$1,000,000** Each Occurrence, **$2,000,000** Annual Aggregate. Contractor agrees its coverage will not contain any restrictive endorsement(s) excluding or limiting Product/Completed Operations, Independent Contractors, Broad Form Property Damage, X-C-U Coverage, Contractual Liability, Cross Liability or Separation of Insureds. The Contractor agrees any self-insured retention or deductible shall not exceed $25,000.

Additional Insured Endorsements

The Contractor agrees to endorse the City of Boca Raton as an Additional Insured on the Commercial General Liability policy on a primary and non-contributory basis with CG 20 10 04 13 endorsement or ISO equivalent.

4.03 Worker's Compensation & Employer's Liability

The Contractor agrees to maintain its own Worker's Compensation & Employers Liability Insurance in compliance with Florida Statute 440. **(NOTE: Elective exemptions or coverage through an employee leasing arrangement will NOT satisfy this requirement).**

4.04 Business Automobile Liability

Contractor agrees to maintain Business Automobile Liability at a limit of liability not less than **$500,000** per Occurrence. Coverage shall include liability for Owned, Non-Owned & Hired automobiles. In the event Contractor does not own automobiles, Contractor agrees to maintain coverage for Hired & Non-Owned Auto Liability, which

may be satisfied by way of endorsement to the Commercial General Liability policy or separate Business Auto Liability policy.

In the event that the Contractor does not own any vehicles, we will accept hired and non-owned coverage in the amounts listed above. In addition, we will require an affidavit signed by the Contractor indicating the following:

_____ does not own any vehicles.
"Company Name"

In the event we acquire any vehicles throughout the term of his Contract/Agreement,

_____ agrees to purchase "Any Auto" or
"Company Name"

Comprehensive Form coverage as of the date of acquisition.

Contractor's Signature: _____

4.05 SUBCONTRACTOR'S INSURANCE

The Contractor shall require each of his subcontractors to take out and maintain during the life of his subcontract the same insurance coverages required of the successful Contractor. Each subcontractor shall furnish to the successful Contractor two copies of the Certificate of Insurance, and successful Contractor shall furnish one copy of the Certificate to the City of Boca Raton.

4.06 SUPPLEMENTAL PROVISIONS

1. The insurance policy coverage as outlined herein shall remain in effect for the entire contract period. In the event of coverage cancellation, non-renewal, material change, modification or lapse of coverage, Contractor shall notify the City within thirty (30) business days with written notice of such to the Purchasing Division by email to Purchasing-Insurance@myboca.us.

2. All renewal or replacement certificates of insurance specific to the contract/agreement/award shall be forwarded to the City of Boca Raton Purchasing Division with a copy to the Boca Raton Department as identified in the Purchase Order/Agreement. Original certificates to be sent attention of City of Boca Raton, Purchasing Division, 201 W. Palmetto Park Road, Boca Raton, FL 33432.

PART V PURCHASE ORDER AND CONTRACT TERMS:

5.01 CONTRACT PERIOD AND RENEWAL

The initial contract period shall be for one (1) year **automatically** renewed thereafter for three, one-year renewal periods subject to termination clause(s) as provided herein. Automatic contract renewal shall be subject to the appropriation of funds, satisfactory performance and determination that the contract renewal is in the best interest of the City. **The City requires a firm price for the first year of the initial contract period.** Annual renewals will be based on the same terms, conditions, pricing and specifications herein. For the purpose of re-bidding, the contract may be extended at the City's option for a defined period of time, not to exceed six (6) months. Option for extension will only be exercised upon mutual written agreement and with all terms, conditions and unit prices adhered to with no deviations.

Prior to each annual renewal, the City may consider price adjustment(s) only when a written request is received by the Buyer identified herein a minimum of ninety (90) days prior to the renewal date for review by the Lead Agency. Vendor is responsible for verifying that written price request was received by the Buyer within ninety (90) days. Vendor's written request shall identify each bid item affected and proposed price with written justification and supporting documentation attesting that the request is a bona fide cost increase/decrease to the vendor. Failure to submit the required supporting documentation may result in the price adjustment request being denied. Vendor's requested price adjustment is subject to City approval and shall require written acknowledgement from the Buyer. In the event that the City does not wish to accept the adjusted cost(s) and the matter cannot be resolved to the satisfaction of the City, the Contract may be terminated by the City by giving written notice to the Vendor.

In the event that a cost decrease is realized due to changes in the economy (CPI/CPU and/or decreases that are industry specific), the City shall have the right to request and receive from the Vendor a reasonable reduction in costs.

5.02 CONTRACT ALTERATIONS

The City may require additional items/services of a similar nature, but not specifically identified in the contract. The Contractor agrees to provide such items/services and shall provide the City prices on such additional items or services based upon a formula or method which is the same or similar to that used in establishing the prices in this bid. If the price(s) offered are not acceptable to the City, and the situation cannot be resolved to the satisfaction of the City, the City reserves the right to procure those items/services from other vendors or to cancel the contract. Furthermore, the City reserves the right to delete or revise items and services under this bid at any time during the contract period when and where deemed necessary. Deletions may be made at the sole discretion of the City at any time during the contract period. Items revised must be mutually agreed upon in writing by the Contractor, the City's Project Manager and Purchasing Manager or appointed designee.

5.03 METHOD OF ORDERING

The following supersedes General Condition 5.01

Each participating entity shall issue the Contractor individual purchase order(s) and/or blanket purchase order(s) throughout the term of the award. The participating entity will order requirement(s) on an "as needed" basis. All terms, conditions and prices of this bid are applicable. **Only awarded bid items may be purchased on the Purchase Order**. Vendor is to take all necessary steps to insure this requirement. Invoices must reference individual entity purchase order number.

5.04 DELIVERY

All delivery requirements shall be in accordance with Technical Specifications, item 1.05.

5.05 DEFAULT

In the event that the Contractor cannot respond adequately to the completion time requirements identified herein by reason of equipment failure or any other reason, the Contractor shall advise the City in writing within 24 hours of said inability, and further advise as to the length of said inability. The City may then consider said inability to be a breach of this contract and may cancel the purchase order and any outstanding services with no penalty to the City and obtain from another vendor or from the next lowest responsive, responsible Bidder. The City shall have the right to deduct the cost incurred in having to provide said services from the payments to be made to the Contractor under this Contract.

5.06 QUANTITY

The **estimated** annual requirements for Sodium Chloride, Solar Salt are as noted on Appendix A, the Co-Op Estimated Annual Usage Schedule. All quantities provided are **estimates** of annual usage. The City of Boca Raton and each participating Co-Op entity reserves the right to increase or decrease their total quantities as necessary to meet actual requirements.

5.07 ACCEPTANCE AND PAYMENT

In conjunction with General Term and Condition No. 5.03 and 5.06, The City of Boca Raton will pay 100% of the contract price for each order after all items have been delivered/installed and accepted. The using department will make final inspection of the material covered by this bid when it is delivered in accordance with the specifications and must be approved before payment is made. Failure in the awarded vendor's responsibility as outlined may result in either one or any of the following as determined by the City:

- Request for immediate replacement and/or correction of partial or entire order.
- Payment withholding until compliance is received and approval granted.
- Return of partial or entire order for full credit at no additional cost to the City.
- Cancellation of partial or entire order at no cost to the City.

Invoice must reflect purchase order number.

5.08 PROTECTION OF PROPERTY

The successful Bidder shall at all times guard against damage or loss to the property of the City of Boca Raton or that of other vendors or contractors, and shall be held responsible for replacing or repairing any such loss or damage. The City of Boca Raton may withhold payment or make such deductions, as deemed necessary, to ensure reimbursement or replacement for loss or damage to property through negligence of the successful Bidder or their agent(s).

5.09 PERFORMANCE EVALUATION

Throughout the contract period the vendor(s) performance will be closely monitored by City staff. The awarded Bidder will be evaluated by use of the City of Boca Raton Performance Report. A sample Vendor Performance

Report may be obtained upon request of the Purchasing Division. If the vendor(s) performance fails to meet the standards specified within the bid and receives an unacceptable rating, the City may without cause and without prejudice to any other right or remedy, terminate the contract whenever the City determines that such termination is in the best interest of the City. Vendor's receiving an unacceptable rating will be notified by certified mail. Contract termination shall be served by written notice by the Purchasing Division.

5.10 PARTICIPATION OF CO-OP MEMBERS

All Co-op members participating in this contract shall do so in accordance with stipulations and governing By-Laws as set forth by the NIGP Southeast Florida Governmental Purchasing Cooperative group.

5.11 E-VERIFY

Should Bidder become the Successful Bidder for Bid No. 2021-024, by entering into this Contract, the Successful Bidder becomes obligated to comply with the provisions of Section 448.095, Fla. Stat., "Employment Eligibility." This includes but is not limited to utilization of the E-Verify System to verify the work authorization status of all employees hired after January 1, 2021 (as well as contractual employees whose contract is renewed after January 1, 2021), and requiring all subcontractors/subconsultants to provide an affidavit attesting that the subcontractor/subconsultant does not employ, contract with, or subcontract with, an unauthorized alien. Failure to comply will lead to termination of this Contract, or if a subcontractor/subconsultant knowingly violates the statute, the subcontract must be terminated immediately. Any challenge to termination under this provision must be filed in the Circuit Court no later than 20 calendar days after the date of termination. If this Contract is terminated for a violation of the statute by the Successful Bidder, the Successful Bidder may not be awarded a public contract for a period of 1 year after the date of termination. Should Successful Bidder violate the requirements of Section 448.095, Fla. Stat., they shall be liable for any additional costs incurred by the City as a result of the termination of the Contract.

THE REMAINDER OF THIS PAGE INTENTIONALLY LEFT BLANK.

TECHNICAL SPECIFICATIONS:

1.01 SCOPE

The purpose of this bid is to obtain a Sodium Chloride product, suitable to use in the electrolytic chlorination process for onsite sodium hypochlorite generators as well as softener resin regeneration. This solicitation is a cooperative procurement on behalf of the NIGP Southeast Florida Governmental Purchasing Cooperative group for Bulk (tank load) deliveries of Sodium Chloride, Solar Salt. The governmental agencies participating in this procurement and their respective delivery locations are indicated on the form identified as Appendix A, "Co-Op Agencies Estimated Annual Usage Schedule".

1.02 PRODUCT SPECIFICATIONS (Bidder to submit product information and descriptive literature as verification that product being bid meets the following specifications)

a) The Sodium Chloride (NaCL) shall be solar salt quality or greater, containing no organic binders, flow control agents, or resin cleaning materials.

b) Product shall be homogenous and in a crystalline granular form.

c) Product shall be white in color.

d) Product shall conform to ANSI and NSF Standard 60 as further detailed in Technical Specifications, item 1.03.

e) The product's composition shall meet or exceed the following specifications (as ppm [mg/kg] weight):

Item	Description	Percentage
1	Dry Basis	96.3-98%
2	Wet Basis	93.3% min.
3	Calcium Sulfate	0.30% max
4	Magnesium chloride	0.06% max
5	Calcium Chloride	0.10 % max
6	Magnesium Sulfate	0.02% max
7	Insolubles:	0.01% max
8	Moisture(as H_2O)	3.0% max
9	Lead	.0007% max
10	Copper	.0003% max
11	Iron(as Fe)	.002% max
12	Total Impurities(soluble and insoluble)	2.0% max

1.03 CERTIFICATIONS/STANDARDS

Product bid shall conform to recognized standards in accordance with American Water Works Association (AWWA) Sodium Chloride B200-93, Section 5, or latest edition.

a) Product Facility Certification: Bidder shall submit as part of bid package, either one of the following product facility certifications for the product bid:

NSF Standard 60 Certification

or

Certification from a third party certification body that is accredited by American National Standards Institute (ANSI) to certify products to National Science Foundation (NSF) Standard 60. These third party certification bodies include NSF International, UL LLC, and Water Quality Association.

Product shall conform to the certification as listed above throughout the contract term.

b) Bidder to submit with the bid package, Material Safety Data Sheets (MSDS), and product specifications/literature for the product bid.

1.04 PRODUCT COMPLIANCE

If product does not meet these requirements at any time during the contract term, the Contractor shall be liable to remove the product from City property and clean the brine-maker tanks at no additional cost to the City. The City reserves the right during the contract period to determine by independent tests if the product supplied meets the aforementioned specifications. If the sample meets the specifications, the City shall pay the cost of the test. If the sample does not meet the specifications, the Contractor shall bear all costs associated with the test.

1.05 DELIVERY REQUIREMENTS

1.05.1 General Guidelines

A. Delivery shall be made within 5 business days after an order is placed. The successful Bidder will be responsible for advising City Staff of backorders or delays at time of order. Deliveries to each location must be made during normal working hours between 8:00 AM and 5:00 PM unless the City has made special arrangements. Carrier shall provide City Contact with at least twenty-four (24) hours advance notice prior to scheduling delivery. Each City Contact is as noted on the attached schedule, Appendix A.

B. Deliveries shall be made only with trucks dedicated solely for the transportation of solar salt in order to prevent contamination and coagulation. Any product received that appears to have been tampered with or contaminated, will be returned to the awarded vendor for replacement, at no additional cost to the City.

C. All bulk shipment shall be accompanied by certified weight tickets. Certificate shall indicate gross, tare, and net weights.

D. All delivery trucks shall be in A-1 Mechanical Condition throughout the term of the contract. All drivers shall be appropriately licensed and trained in proper handling, use and operation of equipment required for delivery of product throughout the term of the contract.

E. Minimum Delivery requirements shall be approximately 25 tons. Bidder shall not impose any further minimum ordering requirements.

1.05.2 Guidelines for City of Boca Raton

A. All bulk chemical deliveries shall be secure from tampering in route to the delivery point utilizing portal sealing devices. Prior to delivery, awarded Bidder is responsible for having an emailed copy of the bill of lading sent to Ed Catalano at the receiving facility (ecatalano@myboca.us.) Bill of lading shall identify the name of the driver (printed) and the serial numbers for all of the seals for all of the tanker's portals. The City of Boca Raton will not accept deliveries after 5:00 PM.

B. Only City of Boca Raton Utility Services staff shall remove seals after inspection of the tanker. Drivers will be required to show a valid driver's license with picture I.D. to be admitted into the Glades Road Utility Complex. Broken portal seals or the absence of portal seals shall be grounds for rejecting the delivery at no expense to the City.

1.05.3 Guidelines for Co-Op Participants

Contact information, including fax numbers (if relevant) and email addresses to be provided at post award meeting with any special delivery requirements.

1.06 QUALITY CONTROL PROGRAM

Bidder and or the manufacturer of the product shall have a Quality Control Program in place at the plant location manufacturing the product bid.

Appendix A

Co-Op Agencies Estimated Annual Usage Schedule

Agency	Contact	Annual Usage	Fittings	Tank
City of Boca Raton Wastewater Plant 1501 Glades Road Boca Raton, FL 33431	Ed Catalano 561-338-7332 ecatalano@myboca.us	1200 tons	Contractor shall be responsible for pneumatically off-loading via a hose connection to a 4" aluminum CAM lock male fitting.	WWTP has two FRP tanks at 59 tons each
Town of Davie Water Plant System V 7351 SW 30th Street Davie, FL 33314	Daryl Cotton 954-327-3760 Daryl_cotton@davie-fl.gov	450 tons	Contractor shall be responsible for pneumatically off-loading via a hose connection to a 4" aluminum CAM lock male fitting	60 ton silo
Town of Davie Water Plant System III 3500 NW 76th Ave. Hollywood, FL 33024	Stanley Ebanks 954-327-3775 Stanley_ebanks@davie-fl.gov	150 tons	Contractor shall be responsible for pneumatically off-loading via a hose connection to a 4" aluminum CAM lock male fitting	32 ton silo
Town of Lantana Water Treatment Plant 510 W. Pine Street Lantana, FL 33462	Jerry Darr or Miguel Perez 561-540-5760 waterplant@lantana.org	1200 tons	Contractor shall be responsible for pneumatically off-loading via a hose connection to a 4" aluminum CAM lock male fitting	WTP has 34 ton tank
City of Margate Water Treatment Plant 980 NW 66th Ave Margate, FL 33063	Richard M. Uber 954-999-7298 or 954-972-0828 ruber@margatefl.com	500 tons	Contractor shall be responsible for pneumatically off-loading via a hose connection to a 4" aluminum CAM lock male fitting	WTP has one tank @ 60 tons manufactured by Brine Maker.
City of Margate Wastewater Treatment Plant 6630 NW 9th St Margate, FL 33063	Wendell Wheeler 954-972-0828 x228 wwheeler@margatefl.com	250 tons	Contractor shall be responsible for pneumatically off-loading via a hose connection to a 4" aluminum CAM lock male fitting	WWTP has one tank @ 60 tons capacity manufactured by Brine Maker.
City of Pembroke Pines 7960 Johnson Street Pembroke Pines, FL 33024	Michael Cepeda 754-260-4505 michael.cepeda@jacobs.com	800 tons	Contractor shall be responsible for pneumatically off-loading via a hose connection to a 4" aluminum CAM lock male fitting	8650 gallon tank

Continued on next page…

Appendix A
Continued…

Co-Op Agencies Estimated Annual Usage Schedule

Agency	Contact	Annual Usage	Fittings	Tank
City of Tamarac Water Treatment Plant 7803 NW 61st Street Tamarac, FL 33321	Jason Bentley or Nishaad Preetam 954-597-3787, 954-597-3776 Jason.Bentley@tamarac.org, Nishaad.Preetam@tamarac.org	600 tons	Contractor shall be responsible for pneumatically off-loading via a hose connection to a 4" aluminum CAM lock male fitting	WTP has a 47 ton silo manufactured by Plas-Tanks Industries, Inc
Village of Palm Springs Site 1 360 Davis Rd Palm Springs, FL 33461	Paul Ward 561-601-5780 pward@vpsfl.org	600 tons	Contractor shall be responsible for pneumatically off-loading via a hose connection to a 4" aluminum CAM lock male fitting	50 ton tank
Village of Palm Springs Site 2 5618 Basil Dr. West Palm Beach, FL 33415	Paul Ward 561-601-5780 pward@vpsfl.org	600 tons	Contractor shall be responsible for pneumatically off-loading via a hose connection to a 4" aluminum CAM lock male fitting	50 ton tank

THE REMAINDER OF THIS PAGE INTENTIONALLY LEFT BLANK.

BID NO. 2021-024

BIDDERS CERTIFICATION

(This form must be signed in the presence of a Notary Public or other officer authorized to administer oaths).

I certify that I am authorized to bind performance of this Bid for the Bidder. I certify that this Bid is made without collusion or fraud. I certify acceptance of the terms, conditions and specifications of this Invitation to Bid. I certify that this Bid submittal is in accordance with the specifications in its entirety and with full understanding of the conditions governing this Bid.

*Bidder must submit proof that their firm name is registered with their State of origin.

***Name of Bidder**: _____
(Firm Name as Registered with their State of origin)

Federal I.D. No.: _____

Above Bidder is: (___) Corporation (___) Limited Liability Corporation

(___) Sole Proprietorship (___) Partnership/Joint Venture

Business Address:

Street Address : _____
(P.O. Box Address is not permitted)

City, State, Zip: _____

Mailing Address: (___) check if same as Business Address above

Street Address: _____

City, State, Zip: _____

Business Phone No: _____

Business Fax No.: _____

Authorized Signer:

Name of Authorized Signer: _____

Title of Authorized Signer: _____
President or other Authorized Officer/Member/Manager

Email for Authorized Signer: _____

Authorized Written Signature: _____

STATE OF: _____ COUNTY OF _____
The foregoing instrument was acknowledged before me by means of ____ physical presence or ____ online notarization this_____ day of _____, 20_____, by _____, who is personally known to me (or who has produced _____ as identification).

NOTARY PUBLIC SIGNATURE: _____

NOTARY NAME: _____

Commission Number: _____ My Commission Expires: _____

BID FORM

The City reserves the right to award this bid to the lowest responsive, responsible Bidder on a grand total or on an entity by entity basis as further detailed in item 3.07 of the Special Conditions. Prices quoted shall be firm and fixed for the initial contract period; product shall be in accordance with specifications noted herein.

ITEM #	ENTITY NAME	ESTIMATED ANNUAL USAGE (E)	Freight Charge Per Location (F)	Unit Price (product only) (P)	Extended Price *(F + P x E)*
1	City of Boca Raton, WWTP	1,200 tons	$_____ / Per Ton	$_____ / Per Ton	$_____
2	Town of Davie WTP	600 tons	$_____ / Per Ton	$_____ / Per Ton	$_____
3	City of Lantana, WTP	1200 tons	$_____ / Per Ton	$_____ / Per Ton	$_____
4	City of Margate WTP, WWTP	750 tons	$_____ / Per Ton	$_____ / Per Ton	$_____
5	City of Pembroke Pines	800 tons	$_____ / Per Ton	$_____ / Per Ton	$_____
6	City of Tamarac, WTP	600 tons	$_____ / Per Ton	$_____ / Per Ton	$_____
7	Village of Palm Springs	1200 tons	$_____ / Per Ton	$_____ / Per Ton	$_____

Grand Total (Sum of Extended Prices for Lines 1 - 7)	$_____

Specify Mfg. /Name of Product being bid: _____ Bulk load Truck Delivery is: _____ tons

Name of Bidder: _____

BIDDERS CHECKLIST

All bids should be submitted on the City provided Bid Package forms. All blanks on the proposed forms must be completed. Bidder is to return a complete set of all bid package forms listed as follows. Failure to submit the required documents may result in your bid being considered non- responsive and thereby rejected.

1. Qualification of Bidder's information included? Yes _____ No _____
2. Questionnaire of Bidder's information included? Yes _____ No _____
3. Copy of Bidder's valid Business Tax Receipt submitted? Yes _____ No _____
4. Bidder including proof of NSF 60 Certification or 3rd party as per Technical Specification item 1.03? Yes _____ No _____
5. MSDS Sheets for product submitted as per Technical Specification item 1.03? Yes _____ No _____
6. Product Information and Descriptive Literature submitted clearly detailing items bid meet specifications herein (Section 1.02 of Technical Specifications) ? Yes _____ No _____
7. Appropriate bid pages signed? Yes _____ No _____
8. Bidder's certification form signed, notarized and submitted? Yes _____ No _____
9. Bid submitted per Instructions to Bidders, Special Conditions item 1.01? Yes _____ No _____
10. Addendum (if any issued) submitted? Yes _____ No _____
11. Proof that firm name is registered with their State of origin? Yes _____ No _____
12. Proof of ability to obtain insurance submitted? Yes _____ No _____
13. Drug Free Workplace Form submitted? Yes _____ No _____
14. Name of individual submitting Bid: _____

    Email address: _____ Ph: _____
15. Contact person for Insurance Certificate: _____

    Phone: _____ Email: _____

Name of Bidder: _____

QUALIFICATION OF BIDDERS INFORMATION

This bid shall be awarded only to a responsive and responsible Bidder, qualified to provide the product specified and meets or exceeds the qualification requirements listed below. The Bidder should submit the following information with their bid package to be considered responsive in order for the City to fully evaluate the firm's qualifications.

1. Bidder shall have a minimum of three (3) satisfactory references for similar size Public Entity accounts for the product bid. Similar size shall mean a minimum of 1,200 tons per year. References shall be satisfactorily completed within the time range of 3/1/2017 through 3/1/2021.

REFERENCE #1

Public Entity Name: _____
Address: _____
City, State, Zip: _____
Contact Name:_____ Title: _____
Phone: _____: Fax: _____Email: _____
Date of Service or Contract Period: _____
Mfg. and Name of Product Supplied_____ _____ _____ Estimated Annual Quantity Supplied: _____

REFERENCE #2

Public Entity Name: _____
Address: _____
City, State, Zip: _____
Contact Name:_____ Title: _____
Phone: _____: Fax: _____Email: _____
Date of Service or Contract Period: _____
Mfg. and Name of Product Supplied: _____ _____ _____ Estimated Annual Quantity Supplied: _____

Continued on next page…

Name of Bidder: _____

QUALIFICATION OF BIDDERS INFORMATION

Continued.

REFERENCE #3

Public Entity Name: _____
Address:_____
City, State, Zip: _____
Contact Name:_____ Title: _____
Phone: _____: Fax: _____Email: _____
Date of Service or Contract Period: _____
Mfg. and Name of Product Supplied: _____ _____ _____ Estimated Annual Quantity Supplied: _____

2. The City will not award a bid to any Bidder who cannot provide evidence that their Firm Name identified on the "Signature of Bidder" form has been in business for a minimum of one (1) year, excluding any affiliate or parent companies. Evidence of a minimum of one (1) year shall be verified in accordance with filing date by the State of Florida or the Firm's State of Origin of Bidder's firm.

   Bidder to indicate number of years their firm has been in business._____

   Proof submitted as attachment: Yes ____ No _____

Name of Bidder: _____

Questionnaire

1. Description of the physical plant and facilities to adequately supply the City.

_____

_____

2. Details of shipping method to be used _____

3. Listing of office hours and Office personnel during these hours for coordination of service.

Office Hours:_____

A. Contact Information for order placement/delivery inquiries:

Name (s) _____

Phone / Email address: _____

B. Contact Information for billing questions:

Name (s) _____

Phone / Email address: _____

C. Contact Information for Insurance questions:

Name (s) _____

Phone / Email address: _____

4. Bidder and or the manufacturer of the product shall have a Quality Control Program in place at the plant location manufacturing the product bid.

Detail the Quality Control Program in place or ☐ submit as an attachment.

_____

_____

Quality Control program is in place at _____plant location.

Provide the name and contact phone number of the person who is responsible for the Quality Control/Assurance program:

_____ Ph: _____

5. Awarded Vendor shall submit Summary of Sales report to Lead Agency of shipments to individual entities in accordance with NIGP SE Chapter as detailed in applicable Co-Op Cover Sheet.

Contact Person who will submit Co-op Usage reports to Lead Agency:_____

Email:_____ Telephone Number: _____

Name of Bidder: _____

DRUG-FREE WORKPLACE FORM

The undersigned vendor in accordance with Florida Statute 287.087 hereby certifies

_____ does:
(Name of Business)

1. Publish a statement notifying employees that the unlawful manufacture, distribution, dispensing, possession, or use of a controlled substance is prohibited in the workplace and specifying the actions that will be taken against employees for violations of such prohibition.

2. Inform employees about the dangers of drug abuse in the workplace, the business's policy of maintaining a drug-free workplace, any available drug counseling, rehabilitation, and employee assistance programs, and the penalties that may be imposed upon employees for drug abuse violations.

3. Give each employee engaged in providing the commodities or contractual services that are under bid a copy of the statement specified in subsection (1).

4. In the statement specified in subsection (1), notify the employees that, as a condition of working on the commodities or contractual services that are under bid, the employee will abide by the terms of the statement and will notify the employer of any conviction of, or plea of guilty or nolo contendere to, any violation of Chapter 893 or of any controlled substance law of the United States or any state, for a violation occurring in the workplace no later than five (5) days after such conviction.

5. Impose a sanction on, or require the satisfactory participation in a drug abuse assistance or rehabilitation program if such is available in the employee's community by, any employee who is so convicted.

6. Make a good faith effort to continue to maintain a drug-free workplace through implementation of this section.

As the person authorized to sign the statement, I certify that this firm complies fully with the above requirements.

_____
Signature of Bidder

_____
Date

STATEMENT OF NO BID

(No Bid may be submitted electronically within the electronic bidding system.)

If you are not bidding on this service/commodity, please complete and return this form to: City of Boca Raton Purchasing Department, 201, W. Palmetto Park Road, Boca Raton, Florida 33432.

COMPANY NAME: _____

ADDRESS: _____

TELEPHONE: _____

SIGNATURE: _____

DATE: _____

We, the undersigned have declined to bid on _____
service/commodity

because of the following reasons:

_____ Insufficient time to respond to the Invitation to Bid

_____ We do not offer this product or an equivalent

_____ Our product schedule would not permit us to perform

_____ Unable to meet specifications

_____ Other (specify below)

REMARKS:_____

_____

_____

_____

_____

BID NO. 2021-024

BIDDERS CERTIFICATION

(This form must be signed in the presence of a Notary Public or other officer authorized to administer oaths).

I certify that I am authorized to bind performance of this Bid for the Bidder. I certify that this Bid is made without collusion or fraud. I certify acceptance of the terms, conditions and specifications of this Invitation to Bid. I certify that this Bid submittal is in accordance with the specifications in its entirety and with full understanding of the conditions governing this Bid.

*Bidder must submit proof that their firm name is registered with their State of origin.

***Name of Bidder**: Morton Salt, Inc.
(Firm Name as Registered with their State of origin)

Federal I.D. No.: 27-3146174

Above Bidder is: (X) Corporation (___) Limited Liability Corporation

(___) Sole Proprietorship (___) Partnership/Joint Venture

Business Address:

Street Address : 444 West Lake Street, Suite 3000
(P.O. Box Address is not permitted)

City, State, Zip: Chicago, IL 60606

Mailing Address: (X) check if same as Business Address above

Street Address: _____

City, State, Zip: _____

Business Phone No: 844-410-0513

Business Fax No.: 312-896-9208

Authorized Signer:

Name of Authorized Signer: Guy Bigler

Title of Authorized Signer: Director of General Manufacturing
President or other Authorized Officer/Member/Manager

Email for Authorized Signer: gbigler@mortonsalt.com

Authorized Written Signature:

STATE OF: Illinois COUNTY OF Cook

The foregoing instrument was acknowledged before me by means of ___ physical presence or X online notarization this 30th day of April, 2021, by Guy Bigler, who is personally known to me (or who has produced _____ as identification).

NOTARY PUBLIC SIGNATURE: Meredith Kerr

OFFICIAL SEAL
MEREDITH KERR
NOTARY PUBLIC - STATE OF ILLINOIS
MY COMMISSION EXPIRES:11/09/22

NOTARY NAME: Meredith Kerr

Commission Number: 885209 My Commission Expires: 11/9/2022

BID FORM

The City reserves the right to award this bid to the lowest responsive, responsible Bidder on a grand total or on an entity by entity basis as further detailed in item 3.07 of the Special Conditions. Prices quoted shall be firm and fixed for the initial contract period; product shall be in accordance with specifications noted herein.

ITEM #	ENTITY NAME	ESTIMATED ANNUAL USAGE (E)	Freight Charge Per Location (F)	Unit Price (product only) (P)	Extended Price *(F + P x E)*
1	City of Boca Raton, WWTP	1,200 tons	$ 44.48 / Per Ton	$ 93.01 / Per Ton	$ 164,988.00
2	Town of Davie WTP	600 tons	$ 44.48 / Per Ton	$ 93.01 / Per Ton	$ 82,494.00
3	City of Lantana, WTP	1200 tons	$ 44.48 / Per Ton 44.48	$ 93.01 / Per Ton	$ 164,988.00
4	City of Margate WTP, WWTP	750 tons	$ 44.48 / Per Ton	$ 93.01 / Per Ton	$ 103,117.50
5	City of Pembroke Pines	800 tons	$ 44.48 / Per Ton	$ 93.01 / Per Ton	$ 109,992.00
6	City of Tamarac, WTP	600 tons	$ 44.48 / Per Ton	$ 93.01 / Per Ton	$ 82,494.00
7	Village of Palm Springs	1200 tons	$ 44.48 / Per Ton	$ 93.01 / Per Ton	$ 164,988.00

Grand Total (Sum of Extended Prices for Lines 1 - 7)	$ 873,061.50

Specify Mfg. /Name of Product being bid: Morton Bulk Solar **Bulk load Truck Delivery is:** 24 **tons**
Industrial Crude Salt

Name of Bidder: Morton Salt, Inc.

BIDDERS CHECKLIST

All bids should be submitted on the City provided Bid Package forms. All blanks on the proposed forms must be completed. Bidder is to return a complete set of all bid package forms listed as follows. Failure to submit the required documents may result in your bid being considered non- responsive and thereby rejected.

1. Qualification of Bidder's information included? Yes X No _____
2. Questionnaire of Bidder's information included? Yes X No _____
3. Copy of Bidder's valid Business Tax Receipt submitted? Yes X No _____
4. Bidder including proof of NSF 60 Certification or 3rd party as per Technical Specification item 1.03? Yes X No _____
5. MSDS Sheets for product submitted as per Technical Specification item 1.03? Yes X No _____
6. Product Information and Descriptive Literature submitted clearly detailing items bid meet specifications herein (Section 1.02 of Technical Specifications) ? Yes X No _____
7. Appropriate bid pages signed? Yes X No _____
8. Bidder's certification form signed, notarized and submitted? Yes X No _____
9. Bid submitted per Instructions to Bidders, Special Conditions item 1.01? Yes X No _____
10. Addendum (if any issued) submitted? Yes X No _____
11. Proof that firm name is registered with their State of origin? Yes X No _____
12. Proof of ability to obtain insurance submitted? Yes X No _____
13. Drug Free Workplace Form submitted? Yes X No _____
14. Name of individual submitting Bid: Lisa Petramala, Inside Sales Manager

    Email address: lpetramala@mortonsalt.com Ph: 312-807-2887
15. Contact person for Insurance Certificate: Marcia Paulsen

    Phone: 312-807-2571 Email: mpaulsen@mortonsalt.com

Name of Bidder: Morton Salt, Inc.

QUALIFICATION OF BIDDERS INFORMATION

This bid shall be awarded only to a responsive and responsible Bidder, qualified to provide the product specified and meets or exceeds the qualification requirements listed below. The Bidder should submit the following information with their bid package to be considered responsive in order for the City to fully evaluate the firm's qualifications.

1. Bidder shall have a minimum of three (3) satisfactory references for similar size Public Entity accounts for the product bid. Similar size shall mean a minimum of 1,200 tons per year. References shall be satisfactorily completed within the time range of 3/1/2017 through 3/1/2021.

REFERENCE #1

Public Entity Name: City of St. Cloud

Address: 3201 Kissimmee Park Road

City, State, Zip: St. Cloud, FL 34772

Contact Name: Leslie Flores Title: Purchasing

Phone: (407) 957-7318 Fax: _____ Email: lflores@stcloud.org

Date of Service or Contract Period: 2/1/2021-12/32/2021

Mfg. and Name of Product Supplied: Bulk Solar Industrial Crude Salt

Estimated Annual Quantity Supplied: 1,750 tons

REFERENCE #2

Public Entity Name: Palm Beach County FL

Address: 2956 Pinehurst Drive

City, State, Zip: Lake Worth, FL 33467

Contact Name: Colleen Cardill Title: Senior Buyer

Phone: 561-616-6839 Fax: _____ Email: ccardill@pbcgov.org

Date of Service or Contract Period: 9/11/2020-9/10/2021

Mfg. and Name of Product Supplied: Bulk Solar Industrial Crude Salt

Estimated Annual Quantity Supplied: 8,100 tons

Continued on next page…

Name of Bidder: Moeton Salt, Inc.

QUALIFICATION OF BIDDERS INFORMATION

Continued.

REFERENCE #3

Public Entity Name: Town Of Davie
Address: 3500 NW 76th Ave.
City, State, Zip: Davie, FL 33314
Contact Name: : Stanley Ebanks Title: Water Plant Operator
Phone: (954) 822-3991 : Fax: _____ Email: stanleyebanks@davie-fl.gov
Date of Service or Contract Period: 6/1/2020-5/30/2021
Mfg. and Name of Product Supplied: Bulk Solar Industrial Crude Salt
Estimated Annual Quantity Supplied: 450 tons

2. The City will not award a bid to any Bidder who cannot provide evidence that their Firm Name identified on the "Signature of Bidder" form has been in business for a minimum of one (1) year, excluding any affiliate or parent companies. Evidence of a minimum of one (1) year shall be verified in accordance with filing date by the State of Florida or the Firm's State of Origin of Bidder's firm.

   Bidder to indicate number of years their firm has been in business. 11*

   Proof submitted as attachment: Yes X No _____

*Morton Salt, Inc. has been incorporated in Delaware for 11 years. It has been in business for +173 years.

Name of Bidder: Morton Salt, Inc.

Questionnaire

1. Description of the physical plant and facilities to adequately supply the City.

Morton Salt Canaveral Plant(2023) Address: 450 Cargo Road Cape Canaveral, FL 32920
Water Conditioning Building - 40,500 ft²;
Food Grade Building (all floors) - 57,603 ft²
Food Grade & PMI Warehouse - 29,000 ft²

2. Details of shipping method to be used MS PNEUMATIC TRUCK

3. Listing of office hours and Office personnel during these hours for coordination of service.

Office Hours: 8am to 4:30pm CST

A. Contact Information for order placement/delivery inquiries:

Name (s) Brian Jakosz

Phone / Email address: Phone: 630.861.2694 email: bjakosz@mortonsalt.com

B. Contact Information for billing questions:

Name (s) Jose Azacon

Phone / Email address: Phone: +1 312 8072549 Email: jose.Azacon@ks-chile.com

C. Contact Information for Insurance questions:

Name (s) Marcia Paulsen

Phone / Email address: Phone: 312.807.2571 Email:MPaulsen@MortonSalt.com

4. Bidder and or the manufacturer of the product shall have a Quality Control Program in place at the plant location manufacturing the product bid.

Detail the Quality Control Program in place or ☐ submit as an attachment.

• Incoming Crude:
Prior to start of offload: 1 sample from each hold tested for purity, size, moisture, bulk density, turbidity and foreign material
Every 4 hours of offload: Foreign material filter pad and moisture
o Incoming crude vessel received approximately every 10-14 days
• Crude Stockpile:1/week: purity, insoluble material, size, moisture, bulk density, turbidity

Quality Control program is in place at Canaveral plant location.

Provide the name and contact phone number of the person who is responsible for the Quality Control/Assurance program:

Lorraine Gracia Diaz, Kristie Womble, Alex Acevedo Ph: +1(321)392-3343, +1(321)392-3531

5. Awarded Vendor shall submit Summary of Sales report to Lead Agency of shipments to individual entities in accordance with NIGP SE Chapter as detailed in applicable Co-Op Cover Sheet.

Contact Person who will submit Co-op Usage reports to Lead Agency: Lisa Petramala

Email: LPETRAMALA@MORTONSALT.COM Telephone Number: 312-807-2887

Name of Bidder: Morton Salt, Inc.

DRUG-FREE WORKPLACE FORM

The undersigned vendor in accordance with Florida Statute 287.087 hereby certifies

Morton Salt, Inc. does:
(Name of Business)

1. Publish a statement notifying employees that the unlawful manufacture, distribution, dispensing, possession, or use of a controlled substance is prohibited in the workplace and specifying the actions that will be taken against employees for violations of such prohibition.

2. Inform employees about the dangers of drug abuse in the workplace, the business's policy of maintaining a drug-free workplace, any available drug counseling, rehabilitation, and employee assistance programs, and the penalties that may be imposed upon employees for drug abuse violations.

3. Give each employee engaged in providing the commodities or contractual services that are under bid a copy of the statement specified in subsection (1).

4. In the statement specified in subsection (1), notify the employees that, as a condition of working on the commodities or contractual services that are under bid, the employee will abide by the terms of the statement and will notify the employer of any conviction of, or plea of guilty or nolo contendere to, any violation of Chapter 893 or of any controlled substance law of the United States or any state, for a violation occurring in the workplace no later than five (5) days after such conviction.

5. Impose a sanction on, or require the satisfactory participation in a drug abuse assistance or rehabilitation program if such is available in the employee's community by, any employee who is so convicted.

6. Make a good faith effort to continue to maintain a drug-free workplace through implementation of this section.

As the person authorized to sign the statement, I certify that this firm complies fully with the above requirements.

Signature of Bidder, Guy Bigler, Director of General Manufacturing

4/30/21
Date

BID NO. 2021-024

BIDDERS CERTIFICATION

(This form must be signed in the presence of a Notary Public or other officer authorized to administer oaths).

I certify that I am authorized to bind performance of this Bid for the Bidder. I certify that this Bid is made without collusion or fraud. I certify acceptance of the terms, conditions and specifications of this Invitation to Bid. I certify that this Bid submittal is in accordance with the specifications in its entirety and with full understanding of the conditions governing this Bid.

*Bidder must submit proof that their firm name is registered with their State of origin.

***Name of Bidder**: Morton Salt, Inc.
(Firm Name as Registered with their State of origin)

Federal I.D. No.: 27-3146174

Above Bidder is: (X) Corporation (___) Limited Liability Corporation

(___) Sole Proprietorship (___) Partnership/Joint Venture

Business Address:

Street Address : 444 West Lake Street, Suite 3000
(P.O. Box Address is not permitted)

City, State, Zip: Chicago, IL 60606

Mailing Address: (X) check if same as Business Address above

Street Address: _____

City, State, Zip: _____

Business Phone No: 844-410-0513

Business Fax No.: 312-896-9208

Authorized Signer:

Name of Authorized Signer: Guy Bigler

Title of Authorized Signer: Director of General Manufacturing
President or other Authorized Officer/Member/Manager

Email for Authorized Signer: gbigler@mortonsalt.com

Authorized Written Signature:

STATE OF: Illinois COUNTY OF Cook

The foregoing instrument was acknowledged before me by means of ___ physical presence or X online notarization this 30th day of April, 20 21, by Guy Bigler, who is personally known to me (or who has produced _____ as identification).

NOTARY PUBLIC SIGNATURE: Meredith Kerr

OFFICIAL SEAL
MEREDITH KERR
NOTARY PUBLIC - STATE OF ILLINOIS
MY COMMISSION EXPIRES 11/09/22

NOTARY NAME: Meredith Kerr

Commission Number: 885209 My Commission Expires: 11/09/2022

Delaware

The First State

I, JEFFREY W. BULLOCK, SECRETARY OF STATE OF THE STATE OF DELAWARE, DO HEREBY CERTIFY "MORTON SALT, INC." IS DULY INCORPORATED UNDER THE LAWS OF THE STATE OF DELAWARE AND IS IN GOOD STANDING AND HAS A LEGAL CORPORATE EXISTENCE SO FAR AS THE RECORDS OF THIS OFFICE SHOW, AS OF THE THIRD DAY OF FEBRUARY, A.D. 2021.

AND I DO HEREBY FURTHER CERTIFY THAT THE ANNUAL REPORTS HAVE BEEN FILED TO DATE.

AND I DO HEREBY FURTHER CERTIFY THAT THE SAID "MORTON SALT, INC." WAS INCORPORATED ON THE THIRTIETH DAY OF JULY, A.D. 2010.

AND I DO HEREBY FURTHER CERTIFY THAT THE FRANCHISE TAXES HAVE BEEN PAID TO DATE.





4843561 8300

Authentication: 202431973

SR# 20210316793

Date: 02-03-21

You may verify this certificate online at corp.delaware.gov/authver.shtml

MOR ON SALT, INC.

Safety Data Sheet

Section 1: Identification of the Substance/Mixture and of the Company/Undertaking

1.1 Product identifier

Product Name • **Common Salt without Additives**

Synonyms

- All Purpose Natural Sea Salt
- All Purpose Purex Salt
- Bulk Culinox 999 NC
- Bulk Extra Coarse Solar Salt Undried NC
- Bulk KD Industrial Salt NC
- Bulk Purex Salt NC
- Bulk Rock Salt NOC 17F NC
- Bulk Rock WC Extra Coarse Southern NC
- Bulk Rock White Crystal Coarse Southern NC
- Bulk Solar Coarse Salt Undried NC
- Bulk Solar Industrial Crude Salt NC
- Bulk Solar Salt
- Bulk Solar WC Extra Coarse Salt NC
- Bulk Solar White Crystal Coarse Salt NC
- Bulk Solar White Crystal Medium Salt NC
- Bunny Spool (Plain Salt)
- California Pure Coarse Sea Salt
- California Pure Fine Sea Salt
- California Pure Medium Sea Salt
- Canning & Pickling Salt
- Coarse Sea Salt (F114100000x)
- Commercial Grade, Water Softening Pellets
- Culinox 999 Chemical Grade Salt
- Culinox 999 Fine Salt
- Culinox 999 Food Grade Salt;
- Evaporated Granulated Salt
- Evaporated Salt Pellets
- Extra Coarse Sea Salt
- Extra Fine 50 Sea Salt
- Extra Fine 70 Sea Salt
- Feed Mixing Salt
- Fine Mixing Salt
- Fine Solar Salt (w/o YPS)
- Hi-Purity Super Soft Salt Extra Coarse Crystals
- H.G. Blending Salt
- Hay & Stock Salt, F&R
- Industrial Crude Solar Salt
- ISCO Crystals, Bulk
- ISCO Medium, Bulk
- ISCO Water Conditioning, Bulk
- KD Crude Solar Salt
- KD Industrial Salt
- Kleer Fine Salt
- Kleer Granulated Salt
- Medium Sea Salt
- Mill Run Salt
- Natural Coarse Sea Salt
- Northern Fine +20 Rock Salt Plain Salt Block
- Northern Rock, F & R
- Plain Salt Brick
- Pool Salt
- Premium Salt Pellets
- Professional's Choice Pool Salt
- Pure and Natural Water Softener Crystals
- PureSun Culinary Crystals
- PureSun Culinary Crystals Coarse
- Purex Salt
- Purex Select Salt
- Reagent Grade Sodium Chloride
- Refined Sea Salt
- Rock Pretzel Salt
- Rock Salt for Making Ice Cream
- Safe-T-Salt (bagged w/o YPS)
- Screened Bulk Solar Undried Salt
- Screened Bulk Solar Undried Salt NC
- Sea Salt, 50 lb. (F113100000x)
- Sea Salt, Tote (F113500000x)
- Sea Salt Grinder
- Sea Salt Grinder Refill
- Select Extra Coarse Rock Salt
- Select Sea Salt
- Service Pack Salt (all)
- Ship n' Shore Rock Salt
- Solar Salt Water Softening Crystals
- Stock Salt
- USP Sodium Chloride
- Valu-Soft Solar Salt
- Water Softening Salt (Undried) Coarse
- Water Softening Salt (Undried) Extra Coarse
- White Crystal Brine Block (50 lb.)
- White Crystal Rock Salt (all)
- White Crystal Solar Salt (all)
- White Crystal Water Softening Solar Salt (all)
- White Pretzel Salt (all)

CAS Number • 7647-14-5

Product Code • MSDS Code: 100

1.2 Relevant identified uses of the substance or mixture and uses advised against

Relevant identified use(s) • Food, Chemical and Drug Processing; Pharmaceuticals; Water Conditioning; Ice Control; Chemical Feedstock – see product data sheets for more information

1.3 Details of the supplier of the safety data sheet

Manufacturer • Morton Salt, Inc.
444 W. Lake St.
Chicago, IL 60606
United States

saltinfo@mortonsalt.com

Telephone (General) • 312-807-2000

1.4 Emergency telephone number

Manufacturer • 312-807-2000

Section 2: Hazards Identification

EU/EEC

According to EU Directive 1272/2008 (CLP)/REACH 1907/2006 [amended by 453/2010]
According to EU Directive 67/548/EEC (DSD) or 1999/45/EC (DPD)

2.1 Classification of the substance or mixture

CLP • Classification criteria not met

DSD/DPD • Classification criteria not met

2.2 Label Elements

CLP

Hazard statements • No label element(s) specifically required

DSD/DPD

Risk phrases • No label element(s) specifically required

2.3 Other Hazards

CLP • According to Regulation (EC) No. 1272/2008 (CLP) this material is not considered hazardous.

DSD/DPD • This product is not considered dangerous under the European Directive 67/548/EEC

United States (US)

According to OSHA 29 CFR 1910.1200 HCS

2.1 Classification of the substance or mixture

OSHA HCS 2012 • Classification criteria not met

2.2 Label elements

OSHA HCS 2012

Hazard statements • No label element(s) specifically required

2.3 Other hazards

OSHA HCS 2012 • This product is not considered hazardous under the U.S. OSHA 29 CFR 1910.1200 Hazard Communication Standard.

Canada

According to WHMIS

2.1 Classification of the substance or mixture

WHMIS • Classification criteria not met

2.2 Label elements

WHMIS • No label element(s) specifically required

2.3 Other hazards

WHMIS • In Canada, the product mentioned above is not considered hazardous under the Workplace Hazardous Materials Information System (WHMIS).

2.4 Other information

NFPA

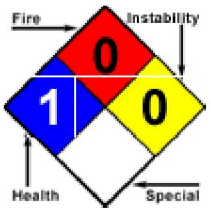

See Section 12 for Ecological Information.

Section 3 - Composition/Information on Ingredients

3.1 Substances

Non-Hazardous Components					
Chemical Name	**Identifiers**	**%(weight)**	**LD50/LC50**	**Classifications According to Regulation/Directive**	**Comments**
Sodium chloride	**CAS:**7647-14-5 **EC Number:**231-598-3	> 99%	Ingestion/Oral-Rat LD50 • 3000 mg/kg	**EU DSD/DPD:** Not Classified - Criteria not met **EU CLP:** Not Classified - Criteria not met **OSHA HCS 2012:** Not Classified - Criteria not met	May contain small quantities of naturally occurring calcium and magnesium salts

3.2 Mixtures

- Material does not meet the criteria of a mixture in accordance with Regulation (EC) No 1272/2008.

See Section 11 for Toxicological Information.

Section 4 - First Aid Measures

4.1 Description of first aid measures

Inhalation
- Move victim to fresh air. Administer oxygen if breathing is difficult. Give artificial respiration if victim is not breathing.

Skin
- IF ON SKIN: Wash with plenty of soap and water. If skin irritation occurs: Get medical advice/attention.

Eye
- In case of contact with substance, immediately flush eyes with running water for at least 20 minutes. If eye irritation persists: Get medical advice/attention.

Ingestion
- If large quantities are swallowed, call a physician immediately.

4.2 Most important symptoms and effects, both acute and delayed

- Refer to Section 11 - Toxicological Information.

4.3 Indication of any immediate medical attention and special treatment needed

Notes to Physician
- All treatments should be based on observed signs and symptoms of distress in the patient. Consideration should be given to the possibility that overexposure to materials other than this product may have occurred.

Section 5 - Firefighting Measures

5.1 Extinguishing media

Suitable Extinguishing Media
- Material is non-combustible. In case of fire use media as appropriate for surrounding fire.

Unsuitable Extinguishing Media
- No data available.

5.2 Special hazards arising from the substance or mixture

Unusual Fire and Explosion Hazards
- No unusual fire or explosion hazards known.

Hazardous Combustion Products
- No data available

5.3 Advice for firefighters

- Structural firefighters' protective clothing will only provide limited protection. Wear positive pressure self-contained breathing apparatus (SCBA).

Section 6 - Accidental Release Measures

6.1 Personal precautions, protective equipment and emergency procedures

Personal Precautions
- Wear suitable protective clothing, gloves, and eye/face protection.

Emergency Procedures
- Stop leak if you can do it without risk. Keep unauthorized personnel away. Use normal clean up procedures.

6.2 Environmental precautions

- None expected to be necessary if material is used under ordinary conditions and as recommended.

6.3 Methods and material for containment and cleaning up

Containment/Clean-up Measures
- Carefully shovel or sweep up spilled material and place in suitable container.

6.4 Reference to other sections

- Refer to Section 8 - Exposure Controls/Personal Protection and Section 13 - Disposal Considerations.

Section 7 - Handling and Storage

7.1 Precautions for safe handling

Handling

- Use good safety and industrial hygiene practices. Wash thoroughly after handling. Keep out of reach of children.

7.2 Conditions for safe storage, including any incompatibilities

Storage

- Avoid storage with strong acids and strong oxidizing agents.

Incompatible Materials or Ignition Sources

- Strong oxidizing agents, strong acids.

7.3 Specific end use(s)

- Refer to Section 1.2 - Relevant identified uses.

Section 8 - Exposure Controls/Personal Protection

8.1 Control parameters

Exposure Limits/Guidelines

- No applicable exposure limits available for product or components.

8.2 Exposure controls

Engineering Measures/Controls

- Adequate ventilation systems as needed to control concentrations of airborne contaminants below applicable threshold limit values.

Personal Protective Equipment

Pictograms

- 

Respiratory

- In case of insufficient ventilation, wear suitable respiratory equipment.

Eye/Face

- Wear safety glasses.

Skin/Body

- Wear appropriate gloves.

General Industrial Hygiene Considerations

- Do not get in eyes or on skin or clothing. Handle in accordance with good industrial hygiene and safety practice.

Environmental Exposure Controls

- Follow best practice for site management and disposal of waste.

Section 9 - Physical and Chemical Properties

9.1 Information on Physical and Chemical Properties

Material Description			
Physical Form	Solid	Appearance/Description	Colorless to white crystalline or compressed block/pellet.
Color	Colorless to White.	Odor	Odorless

Particulate Type	Dust Crystalline	Particulate Size	Variable
Odor Threshold	Data lacking		
General Properties			
Boiling Point	1413 to 1461 C(2575.4 to 2661.8 F)	Melting Point	801 C(1473.8 F)
Decomposition Temperature	Data lacking	pH	7 Approximately
Specific Gravity/Relative Density	2.165 Water=1	Bulk Density	Variable
Water Solubility	Soluble 0.36 g/cc @ 20 C(68 F)	Viscosity	Not relevant
Explosive Properties	Not relevant.	Oxidizing Properties:	Not relevant.
Volatility			
Vapor Pressure	Not relevant	Vapor Density	Not relevant
Evaporation Rate	Not relevant		
Flammability			
Flash Point	Not relevant	UEL	Not relevant
LEL	Not relevant	Autoignition	Not relevant
Flammability (solid, gas)	Not flammable.		
Environmental			
Octanol/Water Partition coefficient	Not relevant		

9.2 Other Information

- No additional physical and chemical parameters noted.

Section 10: Stability and Reactivity

10.1 Reactivity

- No dangerous reaction known under conditions of normal use.

10.2 Chemical stability

- Stable

10.3 Possibility of hazardous reactions

- Hazardous polymerization will not occur.

10.4 Conditions to avoid

- Incompatible materials.

10.5 Incompatible materials

- Strong oxidizing agents, strong acids.

10.6 Hazardous decomposition products

- Will react with strong acids to generate hydrogen chloride and with strong oxidizing agents to generate chlorine gas.

Section 11 - Toxicological Information

11.1 Information on toxicological effects

Component Name	CAS	Data
Sodium chloride (> 99%)	7647-14-5	**Acute Toxicity:** orl-rat LD50:3000 mg/kg

GHS Properties	Classification
Acute toxicity	**EU/CLP**•Classification criteria not met **OSHA HCS 2012**•Classification criteria not met

Aspiration Hazard	**EU/CLP**•Classification criteria not met **OSHA HCS 2012**•Classification criteria not met
Carcinogenicity	**EU/CLP**•Classification criteria not met **OSHA HCS 2012**•Classification criteria not met
Germ Cell Mutagenicity	**EU/CLP**•Classification criteria not met **OSHA HCS 2012**•Classification criteria not met
Skin corrosion/Irritation	**EU/CLP**•Classification criteria not met **OSHA HCS 2012**•Classification criteria not met
Skin sensitization	**EU/CLP**•Classification criteria not met **OSHA HCS 2012**•Classification criteria not met
STOT-RE	**EU/CLP**•Classification criteria not met **OSHA HCS 2012**•Classification criteria not met
STOT-SE	**EU/CLP**•Classification criteria not met **OSHA HCS 2012**•Classification criteria not met
Toxicity for Reproduction	**EU/CLP**•Classification criteria not met **OSHA HCS 2012**•Classification criteria not met
Respiratory sensitization	**EU/CLP**•Classification criteria not met **OSHA HCS 2012**•Classification criteria not met
Serious eye damage/Irritation	**EU/CLP**•Classification criteria not met **OSHA HCS 2012**•Classification criteria not met

Potential Health Effects

Inhalation

Acute (Immediate)
- Under normal conditions of use, no health effects are expected. Inhalation of dust may cause mild irritation to mucous membranes, nose and throat. Symptoms may include coughing, dryness and sore throat.

Chronic (Delayed)
- No data available.

Skin

Acute (Immediate)
- Under normal conditions of use, no health effects are expected.

Chronic (Delayed)
- No data available.

Eye

Acute (Immediate)
- Based upon practical use and experience using this product eye irritation is not expected to occur.

Chronic (Delayed)
- No data available.

Ingestion

Acute (Immediate)
- Ingestion may cause the following symptoms - diarrhea.

Chronic (Delayed)
- No data available.

Key to abbreviations
LD = Lethal Dose

Section 12 - Ecological Information

12.1 Toxicity

- Material data lacking.

12.2 Persistence and degradability

- Material data lacking.

12.3 Bioaccumulative potential

- Material data lacking.

12.4 Mobility in Soil

- Material data lacking.

12.5 Results of PBT and vPvB assessment

- No PBT and vPvB assessment has been conducted.

12.6 Other adverse effects

- No studies have been found.

Section 13 - Disposal Considerations

13.1 Waste treatment methods

Product waste • Dispose of content and/or container in accordance with local, regional, national, and/or international regulations.

Packaging waste • Dispose of content and/or container in accordance with local, regional, national, and/or international regulations.

Section 14 - Transport Information

	14.1 UN number	14.2 UN proper shipping name	14.3 Transport hazard class(es)	14.4 Packing group	14.5 Environmental hazards
DOT	NDA	Not regulated	NDA	NDA	NDA
TDG	NDA	Not regulated	NDA	NDA	NDA
IMO/IMDG	NDA	Not regulated	NDA	NDA	NDA
IATA/ICAO	NDA	Not regulated	NDA	NDA	NDA

14.6 Special precautions for user • None known.

14.7 Transport in bulk according to Annex II of MARPOL 73/78 and the IBC Code • Not relevant.

Section 15 - Regulatory Information

15.1 Safety, health and environmental regulations/legislation specific for the substance or mixture

SARA Hazard Classifications • None

State Right To Know				
Component	**CAS**	**MA**	**NJ**	**PA**
Sodium chloride	7647-14-5	No	No	No

Inventory

Component	CAS	Canada DSL	Canada NDSL	China	EU EINECS	EU ELNICS
Sodium chloride	7647-14-5	Yes	No	Yes	Yes	No

Inventory (Con't.)				
Component	CAS	Japan ENCS	Korea KECL	TSCA
Sodium chloride	7647-14-5	Yes	Yes	Yes

Canada

Labor

Canada - WHMIS - Classifications of Substances

•Sodium chloride 7647-14-5 > 99% Uncontrolled product according to WHMIS classification criteria

Canada - WHMIS - Ingredient Disclosure List

•Sodium chloride 7647-14-5 > 99% Not Listed

Environment

Canada - CEPA - Priority Substances List

•Sodium chloride 7647-14-5 > 99% Not Listed

Europe

Other

EU - CLP (1272/2008) - Annex VI - Table 3.2 - Classification

•Sodium chloride 7647-14-5 > 99% Not Listed

EU - CLP (1272/2008) - Annex VI - Table 3.2 - Concentration Limits

•Sodium chloride 7647-14-5 > 99% Not Listed

EU - CLP (1272/2008) - Annex VI - Table 3.2 - Labelling

•Sodium chloride 7647-14-5 > 99% Not Listed

EU - CLP (1272/2008) - Annex VI - Table 3.2 - Notes - Substances and Preparations

•Sodium chloride 7647-14-5 > 99% Not Listed

EU - CLP (1272/2008) - Annex VI - Table 3.2 - Safety Phrases

•Sodium chloride 7647-14-5 > 99% Not Listed

Mexico

Other

Mexico - Hazard Classifications

•Sodium chloride 7647-14-5 > 99% Not Listed

Mexico - Regulated Substances

•Sodium chloride 7647-14-5 > 99% Not Listed

United States

Labor

U.S. - OSHA - Process Safety Management - Highly Hazardous Chemicals

•Sodium chloride 7647-14-5 > 99% Not Listed

U.S. - OSHA - Specifically Regulated Chemicals

•Sodium chloride 7647-14-5 > 99% Not Listed

Environment

U.S. - CAA (Clean Air Act) - 1990 Hazardous Air Pollutants

•Sodium chloride 7647-14-5 > 99% Not Listed

U.S. - CERCLA/SARA - Hazardous Substances and their Reportable Quantities

•Sodium chloride 7647-14-5 > 99% Not Listed

U.S. - CERCLA/SARA - Radionuclides and Their Reportable Quantities

•Sodium chloride 7647-14-5 > 99% Not Listed

U.S. - CERCLA/SARA - Section 302 Extremely Hazardous Substances EPCRA RQs

•Sodium chloride 7647-14-5 > 99% Not Listed

U.S. - CERCLA/SARA - Section 302 Extremely Hazardous Substances TPQs

•Sodium chloride 7647-14-5 > 99% Not Listed

U.S. - CERCLA/SARA - Section 313 - Emission Reporting

•Sodium chloride 7647-14-5 > 99% Not Listed

U.S. - CERCLA/SARA - Section 313 - PBT Chemical Listing

•Sodium chloride 7647-14-5 > 99% Not Listed

United States - California

Environment

U.S. - California - Proposition 65 - Carcinogens List

•Sodium chloride 7647-14-5 > 99% Not Listed

U.S. - California - Proposition 65 - Developmental Toxicity

•Sodium chloride 7647-14-5 > 99% Not Listed

U.S. - California - Proposition 65 - Maximum Allowable Dose Levels (MADL)

•Sodium chloride 7647-14-5 > 99% Not Listed

U.S. - California - Proposition 65 - No Significant Risk Levels (NSRL)

•Sodium chloride 7647-14-5 > 99% Not Listed

U.S. - California - Proposition 65 - Reproductive Toxicity - Female

•Sodium chloride 7647-14-5 > 99% Not Listed

U.S. - California - Proposition 65 - Reproductive Toxicity - Male

•Sodium chloride 7647-14-5 > 99% Not Listed

United States - Pennsylvania

Labor

U.S. - Pennsylvania - RTK (Right to Know) - Environmental Hazard List

•Sodium chloride 7647-14-5 > 99% Not Listed

U.S. - Pennsylvania - RTK (Right to Know) - Special Hazardous Substances

•Sodium chloride 7647-14-5 > 99% Not Listed

United States - Rhode Island

Labor

U.S. - Rhode Island - Hazardous Substance List

•Sodium chloride 7647-14-5 > 99% Not Listed

15.2 Chemical Safety Assessment

- No Chemical Safety Assessment has been carried out.

Section 16 - Other Information

Last Revision Date	• 07/June 2019
Preparation Date	• 07/June 2019
Disclaimer/Statement of Liability	• The responsibility to provide a safe workplace remains with the user. The user should consider the health hazards and safety information contained herein as a guide and should take those precautions required in an individual operation to instruct employees and develop work practice procedures for a safe work environment. The information contained herein is, to the best of our knowledge and belief, accurate. However, since the conditions of handling and use are beyond our control, we make no guarantee of results, and assume no liability for damages incurred by use of this material. It is the responsibility of the user to comply with all applicable federal, state, and local laws and regulations. Nothing contained herein is to be construed as a recommendation for use in violation of any patents or of applicable laws or regulations.

Key to abbreviations

NDA = No data available

Revision History

Monday, June 15, 2015
Add “Hi-Purity Super Soft Salt Extra Coarse Crystals” F154040000G and
KD Industrial Salt F137300000Z

Tuesday, August 25, 2015
Add -Premium Salt Pellets F115040006G
Add – PureSun Culinary Crystals

Tuesday, November 17, 2015

Add	F154160000Z Bulk ISCO Medium	ISCO Medium, Bulk
	F154150000Z Bulk ISCO Crystals	ISCO Crystals, Bulk
	F154220000Z Bulk ISCO Water Conditioning	ISCO Water Conditioning, Bulk

Thursday, August 04, 2016
Add PureSun TFC Culinary Crystals
PureSun Culinary Crystals – Coarse

Thursday, October 6, 2016
Port Canaveral Product List
Coarse Sea Salt
Extra Coarse Sea Salt
Extra Fine 50 Sea Salt
Extra Fine 70 Sea Salt
Medium Sea Salt
PureSun Culinary Crystals
Sea Salt
Select Sea Salt

Also Pure and Natural Water Softener Crystals

October 11, 2017
Add
Bulk Culinox 999 NC
Bulk Extra Coarse Solar Salt Undried NC
Bulk KD Industrial Salt NC
Bulk Purex Salt NC
Bulk Rock Salt NOC 17F NC
Bulk Rock WC Extra Coarse Southern NC
Bulk Rock White Crystal Coarse Southern NC
Bulk Solar Coarse Salt Undried NC
Bulk Solar Industrial Crude Salt NC
Bulk Solar WC Extra Coarse Salt NC
Bulk Solar White Crystal Coarse Salt NC
Bulk Solar White Crystal Medium Salt NC
Screened Bulk Solar Undried Salt NC

Monday, December 4, 2017
Add Fine Solar Salt

Monday, May 7, 2018
Add Bulk Solar Salt

Wednesday, November 7, 2018
Delete PureSun TFC Culinary Crystals

Tuesday, December 4, 2018
Add White Pretzel Salt

Friday, June 7, 2019
Add Screened Bulk Solar Undried Salt

MORTON SALT **PRODUCT DATA SHEET**

Morton® Bulk Solar Industrial Crude Salt

Description

- This salt is made from crude solar salt either imported from the Bahamas, Brazil, Mexico or produced domestically.
- The salt is produced from brine impounded in open shallow ponds where the brine is concentrated and ultimately crystallized through slow evaporation by solar heat and wind.
- Fractional crystallization and washing voids much of the inorganic salt impurities present in the brine.
- There are no additives.
- Solar salt tends to crystallize in pyramidal aggregates which break up in harvesting and handling into irregular, somewhat rectangular particles. Appearance is crystalline to white with some incidence of a gray to tan shading.
- Meets AWWA Standard B200 for Sodium Chloride.
- This product is certified to NSF/ANSI/CAN 60.

Notice

- This product is not suitable for direct incorporation into food since it is not manufactured in compliance with 21 CFR 117 - Current Good Manufacturing Practice, Hazard Analysis, and Risk-Based Preventive Controls for Human Food.

Chemical Properties

Analyte	u/m	Range	Note
Sodium Chloride	%	>=99.3	1
Calcium Sulfate	%	<=0.30	
Calcium & Magnesium as Calcium	PPM	<=1,500	
Other Salts	%	<=0.56	2
Water Insolubles	%	<=0.14	
Moisture (Surface)	%	<=4.30	

- Note 1. By difference of impurities, moisture-free basis (ASTM Methods).
- Note 2. One or more of the following salts -- calcium chloride, magnesium sulfate, magnesium chloride and sodium sulfate.

Physical Properties

- Range loose (pour) bulk density (g/ml): 0.95 - 1.40
- Range loose (pour) bulk density (lbs/cu.ft.): 59 - 87

444 West Lake Street
Chicago, IL 60606-0090
P +1 312.807.2000
W MortonSalt.com
MORTON SALT, INC.
A K+S GROUP COMPANY

ACORD®

CERTIFICATE OF LIABILITY INSURANCE

DATE (MM/DD/YYYY): 12/31/2020

THIS CERTIFICATE IS ISSUED AS A MATTER OF INFORMATION ONLY AND CONFERS NO RIGHTS UPON THE CERTIFICATE HOLDER. THIS CERTIFICATE DOES NOT AFFIRMATIVELY OR NEGATIVELY AMEND, EXTEND OR ALTER THE COVERAGE AFFORDED BY THE POLICIES BELOW. THIS CERTIFICATE OF INSURANCE DOES NOT CONSTITUTE A CONTRACT BETWEEN THE ISSUING INSURER(S), AUTHORIZED REPRESENTATIVE OR PRODUCER, AND THE CERTIFICATE HOLDER.

IMPORTANT: If the certificate holder is an ADDITIONAL INSURED, the policy(ies) must have ADDITIONAL INSURED provisions or be endorsed. If SUBROGATION IS WAIVED, subject to the terms and conditions of the policy, certain policies may require an endorsement. A statement on this certificate does not confer rights to the certificate holder in lieu of such endorsement(s).

PRODUCER Willis Towers Watson Midwest, Inc. c/o 26 Century Blvd P.O. Box 305191 Nashville, TN 372305191 USA	CONTACT NAME: Willis Towers Watson Certificate Center PHONE (A/C, No, Ext): 1-877-945-7378 FAX (A/C, No): 1-888-467-2378 E-MAIL ADDRESS: certificates@willis.com
INSURED Morton Salt, Inc. 444 West Lake Street, Suite 3000 Chicago, IL 606060090	INSURER(S) AFFORDING COVERAGE — NAIC # INSURER A : HDI Global Insurance Company — 41343 INSURER B : Zurich American Insurance Company — 16535 INSURER C : American Zurich Insurance Company — 40142 INSURER D : INSURER E : INSURER F :

COVERAGES **CERTIFICATE NUMBER:** W19654871 **REVISION NUMBER:**

THIS IS TO CERTIFY THAT THE POLICIES OF INSURANCE LISTED BELOW HAVE BEEN ISSUED TO THE INSURED NAMED ABOVE FOR THE POLICY PERIOD INDICATED. NOTWITHSTANDING ANY REQUIREMENT, TERM OR CONDITION OF ANY CONTRACT OR OTHER DOCUMENT WITH RESPECT TO WHICH THIS CERTIFICATE MAY BE ISSUED OR MAY PERTAIN, THE INSURANCE AFFORDED BY THE POLICIES DESCRIBED HEREIN IS SUBJECT TO ALL THE TERMS, EXCLUSIONS AND CONDITIONS OF SUCH POLICIES. LIMITS SHOWN MAY HAVE BEEN REDUCED BY PAID CLAIMS.

INSR LTR	TYPE OF INSURANCE	ADDL INSD	SUBR WVD	POLICY NUMBER	POLICY EFF (MM/DD/YYYY)	POLICY EXP (MM/DD/YYYY)	LIMITS	
A	X COMMERCIAL GENERAL LIABILITY CLAIMS-MADE / X OCCUR GEN'L AGGREGATE LIMIT APPLIES PER: X POLICY / PRO-JECT / LOC OTHER:	Y		GLD11429-11	01/01/2021	01/01/2022	EACH OCCURRENCE DAMAGE TO RENTED PREMISES (Ea occurrence) MED EXP (Any one person) PERSONAL & ADV INJURY GENERAL AGGREGATE PRODUCTS - COMP/OP AGG	$ 1,000,000 $ 500,000 $ 10,000 $ 1,000,000 $ 2,000,000 $ 2,000,000
B	AUTOMOBILE LIABILITY X ANY AUTO OWNED AUTOS ONLY / SCHEDULED AUTOS HIRED AUTOS ONLY / NON-OWNED AUTOS ONLY			BAP 6221209 07	01/01/2021	01/01/2022	COMBINED SINGLE LIMIT (Ea accident) BODILY INJURY (Per person) BODILY INJURY (Per accident) PROPERTY DAMAGE (Per accident)	$ 1,000,000 $ $ $
	UMBRELLA LIAB / OCCUR EXCESS LIAB / CLAIMS-MADE DED / RETENTION $						EACH OCCURRENCE AGGREGATE	$ $
C	WORKERS COMPENSATION AND EMPLOYERS' LIABILITY ANYPROPRIETOR/PARTNER/EXECUTIVE OFFICER/MEMBER EXCLUDED? Y/N: No (Mandatory in NH) If yes, describe under DESCRIPTION OF OPERATIONS below	N/A		WC 6221212 07	01/01/2021	01/01/2022	X PER STATUTE / OTH-ER E.L. EACH ACCIDENT E.L. DISEASE - EA EMPLOYEE E.L. DISEASE - POLICY LIMIT	$ 1,000,000 $ 1,000,000 $ 1,000,000
B	Workers Compensation & Employers Liability - Retro Per Statute			WC 6221213 07	01/01/2021	01/01/2022	E.L. Each Accident E.L. Disease-EA EMPL E.L. Disease-Pol Lmt	$1,000,000 $1,000,000 $1,000,000

DESCRIPTION OF OPERATIONS / LOCATIONS / VEHICLES (ACORD 101, Additional Remarks Schedule, may be attached if more space is required)

SEE ATTACHED

CERTIFICATE HOLDER

City of Boca Raton
Purchasing Division /Room 105
201 W. Palmetto Park Road
Boca Raton, FL 33432

CANCELLATION

SHOULD ANY OF THE ABOVE DESCRIBED POLICIES BE CANCELLED BEFORE THE EXPIRATION DATE THEREOF, NOTICE WILL BE DELIVERED IN ACCORDANCE WITH THE POLICY PROVISIONS.

AUTHORIZED REPRESENTATIVE

© 1988-2016 ACORD CORPORATION. All rights reserved.

The ACORD name and logo are registered marks of ACORD

SR ID: 20542710 BATCH: 1931970

AGENCY CUSTOMER ID: _____

LOC #: _____

ADDITIONAL REMARKS SCHEDULE

AGENCY		NAMED INSURED
Willis Towers Watson Midwest, Inc.		Morton Salt, Inc. 444 West Lake Street, Suite 3000 Chicago, IL 606060090
POLICY NUMBER See Page 1		
CARRIER See Page 1	NAIC CODE See Page 1	EFFECTIVE DATE: See Page 1

ADDITIONAL REMARKS

THIS ADDITIONAL REMARKS FORM IS A SCHEDULE TO ACORD FORM,

FORM NUMBER: 25 FORM TITLE: Certificate of Liability Insurance

The City of Boca Raton is named as Additional Insured with respect to General Liability.

INSURER AFFORDING COVERAGE: Zurich American Insurance Company NAIC#: 16535

POLICY NUMBER: EWS 6221214 07 EFF DATE: 01/01/2021 EXP DATE: 01/01/2022

TYPE OF INSURANCE:	LIMIT DESCRIPTION:	LIMIT AMOUNT:
Workers Compensation	E.L. Each Accident	$1,000,000
& Employers Liability - OH	E.L. Disease-EA EMPL	$1,000,000
Per Statute	E.L. Disease-Pol Lmt	$1,000,000

© 2008 ACORD CORPORATION. All rights reserved.

The ACORD name and logo are registered marks of ACORD

City of Boca Raton
Tabulation for: 2021-024 Solar Salt (Bulk) Supply & Delivery
Opening Date: May 3, 2021 @ 3:00 PM
Tabulation is an indication of prices only and not a determination of the responsive, responsible bidders
denotes vendor calculation error

			Morton Salt, Inc.		
ITEM #	ENTITY NAME	ESTIMATED ANNUAL USAGE (E)	Freight Charge Per Location (F)	Unit Price (product only) (P)	Extened Price (F + P x E)
1	City of Boca Raton, WWTP	1,200 tons	$44.48	$93.01	$164,988.00
2	Town of Davie WTP	600 tons	$44.48	$93.01	$82,494.00
3	City of Lantana, WTP	1,200 tons	$44.48	$93.01	$164,988.00
4	City of Margate WTP, WWTP	750 tons	$44.48	$93.01	$103,117.50
5	City of Pembroke Pines	800 tons	$44.48	$93.01	$109,992.00
6	City of Tamarac, WTP	600 tons	$44.48	$93.01	$82,494.00
7	Village of Palm Springs	1,200 tons	$44.48	$93.01	$164,988.00
	Grand Total (Sum of Extended Prices for Lines 1 - 7)				**$873,061.50**
	Specify Mfg. /Name of Product being bid:		**Name of Product**		**Morton Bulk Solar**
	Bulk load Truck Delivery is:				**24** tons

Village of Palm Springs

Executive Brief

AGENDA DATE: June 9, 2022

DEPARTMENT: Public Service

ITEM #9: Approve Submersible Wastewater Pumps, Accessories, and Service Agreement - Invitation to Bid (ITB No. 2022B-010) - Utilities Department (FY 2022 Budget Funded - Water & Sewer Enterprise Fund) - Wastewater Solutions, LLC, Hudson Pump & Equipment, and PSI Technologies, Inc.

SUMMARY: Throughout the year, the Public Service Department needs to purchase replacement submersible pumps and various accessories for Village lift stations and water treatment plants. Each pump installation has unique hydraulic and physical characteristics that a single pump manufacturer cannot meet. The staff is proposing to standardize the types of pumps, accessories, and repair services utilized within our utility processes to achieve operational efficiencies and experience overall cost savings, thus providing a higher quality of service for our utility customers.

To ensure the lowest possible prices possible, staff issued an Invitation to Bid (ITB) on March 31, 2022, to purchase submersible wastewater pumps, accessories, and services. The Village used a competitive selection process - Submersible Wastewater Pumps, Accessories, and Service (ITB No. 2022B-010 - March 31, 2022).

Within the Fiscal Year 2022 six (6) Year Capital Budget Plan, the Village Council approved $125,000 annually to replace lift station pumps. In response to the invitation, there were three (3) bid proposals received for the submersible pumps, accessories, and repair services:

Vendor	***Pumps % off MSRP***	***Accessories % off MSRP***	***Repairs Hourly Rate***
Wastewater Solutions, LCC	0%	0%	NA
Hudson Pump & Equipment	0%	0%	$115.00
PSI Technologies, Inc.	30%	20%	$125.00

Generally, when a new pump is needed, staff will request the current pricing for the required type of pump from each vendor, and then select the lowest costing pump (including the approved discount).

After reviewing the three (3) bids, staff recommends the award of a contract to each of the three (3)

equally qualified vendors. If approved, the Village would accept pricing from the three (3) vendors, including all terms, conditions, and pricing as submitted within their ITB proposal. The term of each contract is three (3) years with two (2) one-year renewal options. The Village will not expend more than the amount within the approved budget as it may be adopted/amended each year for these goods and services over the term of this contract.

The Village Attorney prepared the agreement, and the Interim Public Service Administrator, Assistant Village Manager, and Finance Director reviewed it.

The Village has worked with the proposed vendors previously, and the quality of their products was excellent.

FISCAL IMPACT:

Funding to support the proposed purchases is available within the FY 2022 Budget - Water & Sewer Enterprise Fund. The Village will not expend more than the amount in the approved budget as it may be adopted/approved each year for the goods and services for the term of the contract.

ATTACHMENTS:

1. Bid Advertisement - ITB No. 2022B-010
2. Bid Specifications - ITB No. 2022B-010
3. Addendum No. 1 - ITB No. 2022B-010
4. Bid Opening Tabulation Sheet - ITB No. 2022B-010
5. Bid Proposal - PSI Technologies, Inc.
6. Bid Proposal - Wastewater Solutions, LLC
7. Bid Proposal - Hudson Pumps

Village of Palm Springs
226 Cypress Lane • Palm Springs, Florida 33461-1699
561-965-4010 • www.vpsfl.org

NOTICE OF SOLICITATION
ITB # 2022B-010

SUBMERSIBLE WASTEWATER PUMPS, ACCESSORIES, AND SERVICE

ITB SUBMISSION DATE: April 27, 2022, BY 2:00 PM

Sealed Bids for the purchase of submersible wastewater pumps, accessories, and service will be received, by the Village of Palm Springs, at the office of the Palm Springs Village Clerk, 226 Cypress Lane, Palm Springs, Florida 33461 until **2:00 pm** local time on **April 27, 2022,** at which time the bids received will be publicly opened and read. The equipment and/or services required consist of the furnishing of submersible wastewater pumps, related accessories, and services. ***All Bidders are advised to closely examine the Invitation to Bid documents*.**

Invitation to Bid documents are available beginning **March 31, 2022**. The Village of Palm Springs utilizes electronic online services for notification, distribution, and submittal of its Solicitation documents. The Village's Solicitation information can be obtained from: (a) Demandstar website – www.Demandstar.com; (b) by contacting the Procurement Specialist, Theresa L. Gonzalez, at procurement@vpsfl.org; (c) or calling the Finance Department at (561) 584-8200 ext. 8447.

Bidders who obtain solicitations from sources other than those named above are cautioned that the Bid package may be incomplete. The Village will not evaluate incomplete bid packages. Demandstar is an independent entity and is not an agent or representative of the Village. Communications to Demandstar do not constitute communications to the Village. The Village is not responsible for errors and omissions occurring in the transmission or downloading of any documents, addenda, plans, or specifications from these websites. In the event of any discrepancy between information on these websites and the Solicitation documents, the terms and conditions of the Solicitation documents will prevail.

Bidders may submit their responses electronically via Demandstar. Bidders also have the option to submit one (1) unbound original and one (1) complete copy of the Bid Document to the Village Clerk at the time and date specified. Sealed Bids must be marked "**ITB #2022B-010, SUBMERSIBLE WASTEWATER PUMPS, ACCESSORIES, AND SERVICE**".

The Village of Palm Springs will provide for public participation through Gotowebinar.com, a communication media technology (teleconference) for the pre-bid conference at **2:00 pm** local time on **April 12, 2022.** The Physical Point of Access is Village Hall at 226 Cypress Lane, Palm Springs, FL 33461. Attendance at the pre-bid conference is **NON-MANDATORY**.

Non-mandatory Pre-Bid Conference – April 12, 2022, at 2:00 pm

Participants can use their telephone or computer mic & speakers (VoIP)

- Registration https://attendee.gotowebinar.com/register/3567482446430855179
  Web ID# 679-391-411
- Phone: United States +1 (562) 247-8321 Web ID# 765-190-577

Bid Opening – April 27, 2022, at 2:30 pm

Participants can use their telephone or computer mic & speakers (VoIP)

- Registration: https://attendee.gotowebinar.com/register/2930861915415003661
  Web ID# 303-198-771
- Phone: United States +1 (631) 992-3221 Web ID# 265-563-916

It is the responsibility of the Bidder to ensure that all pages are included. Therefore, all Bidders are advised to closely examine this package. Any questions regarding the completeness of this package should be immediately directed to the Procurement Specialist.

Bidders are requested to furnish the goods/services as described herein and in accordance with applicable terms, conditions and specifications as set forth herein without any modification, change or alterations to any terms, conditions, or provisions of this solicitation, unless specifically approved in writing by the Village.

No bid may be withdrawn for a period of sixty (60) days after the scheduled closing date for the receipt of bids except as otherwise provided in the Instructions to Bidders and Terms and Conditions.

By submitting an offer which is accepted by the Village, a binding contract is formed in accordance with the terms, conditions and specifications as set forth in this Invitation to Bid (ITB).

The Village of Palm Springs reserves the right to reject any or all bids, to waive technicalities, and to re-advertise. The award, if made, will be made to the most responsive and responsible Bidder whose bid is determined by the Village, in its sole discretion, to be most advantageous.

Bid security shall be furnished in accordance with the Instructions to Bidders. Any questions regarding the specifications and Solicitation process must be submitted in writing to the Procurement Specialist at procurement@vpsfl.org, Questions and requests for clarification and additional information must be received prior to the Deadline for Submission of Questions on **April 20, 2022**, by **5:00 pm** local time.

Pursuant to Section 2-355 of Palm Beach County Ordinance No. 2011-039, and the purchasing policies of the Village of Palm Springs, all Solicitations, once advertised, are under the “Cone of Silence” until the appropriate authority has approved an award recommendation, rejected all responses or some other action by the Village to end the selection process. This limits and requires documentation of communications between potential Bidders and/or Bidders on Village Solicitations, the Village’s professional staff, and the Village Council members.

Owner:	Village of Palm Springs
BY:	Theresa L. Gonzalez, Procurement Specialist
DATE:	March 31, 2022
Publication:	Demandstar and Village of Palm Springs website
BY:	Kimberly Wynn, Village Clerk
Publication:	Lake Worth Herald

+ + END OF ADVERTISEMENT FOR BIDS + +

Village of Palm Springs
226 Cypress Lane • Palm Springs, Florida 33461-1699
561-965-4010 • www.vpsfl.org

NOTICE OF SOLICITATION
ITB # 2022B-010

SUBMERSIBLE WASTEWATER PUMPS, ACCESSORIES, AND SERVICE

ITB SUBMISSION DATE: April 27, 2022, BY 2:00 pm

Sealed Bids for the purchase of submersible wastewater pumps, accessories, and service will be received, by the Village of Palm Springs, at the office of the Palm Springs Village Clerk, 226 Cypress Lane, Palm Springs, Florida 33461 until **2:00 pm** local time on **April 27, 2022,** at which time the bids received will be publicly opened and read. The equipment and/or services required consist of the furnishing of submersible wastewater pumps, related accessories, and services. ***All Bidders are advised to closely examine the Invitation to Bid documents*.**

Invitation to Bid documents are available beginning **March 31, 2022**. The Village of Palm Springs utilizes electronic online services for notification, distribution, and submittal of its Solicitation documents. The Village's Solicitation information can be obtained from: (a) Demandstar website – www.Demandstar.com; (b) by contacting the Procurement Specialist, Theresa L. Gonzalez, at procurement@vpsfl.org; (c) or calling the Finance Department at (561) 584-8200 ext. 8447.

Bidders who obtain solicitations from sources other than those named above are cautioned that the Bid package may be incomplete. The Village will not evaluate incomplete bid packages. Demandstar is an independent entity and is not an agent or representative of the Village. Communications to Demandstar do not constitute communications to the Village. The Village is not responsible for errors and omissions occurring in the transmission or downloading of any documents, addenda, plans, or specifications from these websites. In the event of any discrepancy between information on these websites and the Solicitation documents, the terms and conditions of the Solicitation documents will prevail.

Bidders may submit their responses electronically via Demandstar. Bidders also have the option to submit one (1) unbound original and one (1) complete copy of the Bid Document to the Village Clerk at the time and date specified. Sealed Bids must be marked "**ITB #2022B-010, SUBMERSIBLE WASTEWATER PUMPS, ACCESSORIES, AND SERVICE**".

The Village of Palm Springs will provide for public participation through Gotowebinar.com, a communication media technology (teleconference) for the pre-bid conference at **2:00 pm** local time on **April 12, 2022.** The Physical Point of Access is Village Hall at 226 Cypress Lane, Palm Springs, FL 33461. Attendance at the pre-bid conference is **NON-MANDATORY**.

Non-mandatory Pre-Bid Conference – April 12, 2022, at 2:00 pm

Participants can use their telephone or computer mic & speakers (VoIP)

- Registration https://attendee.gotowebinar.com/register/3567482446430855179
  Web ID# 679-391-411
- Phone: United States +1 (562) 247-8321 Web ID# 765-190-577

Bid Opening – April 27, 2022, at 2:30 pm

Participants can use their telephone or computer mic & speakers (VoIP)

- Registration: https://attendee.gotowebinar.com/register/2930861915415003661
  Web ID# 303-198-771
- Phone: United States +1 (631) 992-3221 Web ID# 265-563-916

It is the responsibility of the Bidder to ensure that all pages are included. Therefore, all Bidders are advised to closely examine this package. Any questions regarding the completeness of this package should be immediately directed to the Procurement Specialist.

Bidders are requested to furnish the goods/services as described herein and in accordance with applicable terms, conditions and specifications as set forth herein without any modification, change or alterations to any terms, conditions, or provisions of this solicitation, unless specifically approved in writing by the Village.

No bid may be withdrawn for a period of sixty (60) days after the scheduled closing date for the receipt of bids except as otherwise provided in the Instructions to Bidders and Terms and Conditions.

By submitting an offer which is accepted by the Village, a binding contract is formed in accordance with the terms, conditions and specifications as set forth in this Invitation to Bid (ITB).

The Village of Palm Springs reserves the right to reject any or all bids, to waive technicalities, and to re-advertise. The award, if made, will be made to the most responsive and responsible Bidder whose bid is determined by the Village, in its sole discretion, to be most advantageous.

Bid security shall be furnished in accordance with the Instructions to Bidders. Any questions regarding the specifications and Solicitation process must be submitted in writing to the Procurement Specialist at procurement@vpsfl.org, Questions and requests for clarification and additional information must be received prior to the Deadline for Submission of Questions on **April 20, 2022**, by **5:00 pm** local time.

Pursuant to Section 2-355 of Palm Beach County Ordinance No. 2011-039, and the purchasing policies of the Village of Palm Springs, all Solicitations, once advertised, are under the “Cone of Silence” until the appropriate authority has approved an award recommendation, rejected all responses or some other action by the Village to end the selection process. This limits and requires documentation of communications between potential Bidders and/or Bidders on Village Solicitations, the Village’s professional staff, and the Village Council members.

Owner:	Village of Palm Springs
BY:	Theresa L. Gonzalez, Procurement Specialist
DATE:	March 31, 2022
Publication:	Demandstar and Village of Palm Springs website
BY:	Kimberly Wynn, Village Clerk
Publication:	Lake Worth Herald

+ + END OF ADVERTISEMENT FOR BIDS + +

INVITATION TO BID

ITB # 2022B-010	**TITLE: Submersible Wastewater Pumps, Accessories, and Service**
CONTACT PERSON: Theresa L. Gonzalez	**PHONE: (561) 584-8200 Ext. 8447**
E-MAIL: procurement@vpsfl.org	

****** E-MAILED RESPONSES ACCEPTABLE ******

To ensure that your offer is considered, it must be received in the Village of Palm Springs Clerks Office no later than 2:00 P.M., PALM BEACH COUNTY LOCAL TIME, by the submission date. Offers received after this time will not be considered.

This Request for Quotation, General Conditions, Instructions to Bidders, Special Conditions, Specifications, Attachments, Amendments (if issued), and/or any other referenced document form a part of this ITB solicitation and response thereto, and by reference are made a part thereof. The selected awardee/s shall be bound by all terms, conditions and requirements in these documents.

GENERAL CONDITIONS, INSTRUCTIONS, AND INFORMATION FOR BIDDERS
GENERAL CONDITIONS

The following Terms and Conditions are applicable to this purchase order/contract entered into by and between the Village of Palm Springs (referred to as Village) and Bidder.

1. CONE OF SILENCE

Pursuant to Section 2-355 of Palm Beach County Ordinance No. 2011-039, and the purchasing policies of the Village of Palm Springs, all Solicitations, once advertised and until the appropriate authority has approved an award recommendation, are under the "Cone of Silence". This limits and requires documentation of communications between potential Bidders and/or Bidders on Village Solicitations, the Village's professional staff, and the Village Council members.

2. ADDENDA

The Village may issue an addendum in response to any inquiry received, prior to the close of the Solicitation period, which changes, adds, or clarifies the terms, provisions, or requirements of the Solicitation. The Bidder should not rely on any representation, statement, or explanation, whether written or verbal, other than those made in the Solicitation document or in the addenda issued. Where there appears to be a conflict between the Solicitation and any addenda, the last addendum issued shall prevail. It is the vendor's responsibility to ensure receipt of all addenda, and any accompanying documentation. The vendor is required to submit with its Bid or Bid a signed "Acknowledgment of Addenda" form, when any addenda have been issued.

3. LEGAL REQUIREMENTS

This Solicitation is subject to all legal requirements contained in the applicable Village Ordinances and Resolutions, as well as all applicable Village, State, and Federal Statutes. Where conflict exists between this Bid Solicitation and these legal requirements, the authority shall prevail in the following order: Federal, State, and local.

4. CHANGE OF BID

Prior to the scheduled Bid opening a Bidder may change its Bid by submitting a new Bid (as indicated on the cover page) with a letter on the firm's letterhead, signed by an authorized agent stating that the new submittal replaces the original submittal. The new submittal shall contain the letter and all information as required for submitting the original Bid. No changes to a Bid will be accepted after the Bid has been opened.

5. WITHDRAWAL OF BID

A Bid shall be irrevocable unless the Bid is withdrawn as provided herein. Only a written letter received by the Procurement Specialist prior to the Bid opening date may withdraw a Bid. The withdrawal letter must be on company letterhead and signed by an authorized agent of the Bidder.

6. CONFLICTS WITHIN THE BID SOLICITATION

Where there appears to be a conflict between the General Terms and Conditions, Special Conditions, the Technical Specifications, the Bid Submittal Form, or any addendum issued, the order of precedence shall be: the last addendum issued, the Bid Submittal Form, the Technical Specifications, the Special Conditions, and then the General Terms and Conditions.

7. PAYMENT TERMS

It is the policy of the Village of Palm Springs that payment for all purchases by Village departments shall be made in a timely manner. The Village will pay the awarded Bidder upon receipt and acceptance of the goods or services by a duly authorized representative of the Village. In accordance with Section 218.74, Florida Statutes, the time at which payment shall be due from the Village shall be forty-five (45) days from receipt of a proper invoice. Proceedings to resolve disputes for payment of obligations shall be concluded by final written decision of the Village Manager or designee, not later than sixty (60) days after the date on which the proper invoice was received by the Village.

8. DISCOUNTS (PROMPT PAYMENTS)

The Bidder may offer cash discounts for prompt payments; however, such discounts will not be considered in determining the lowest price during Bid evaluation. Bidders are requested to provide prompt payment terms in the space provided on the Bid submittal signature page of the Solicitation.

9. PREPARATION OF BIDS

a. The Bid forms define requirements of items to be purchased and must be completed and submitted with the Bid. Use of any other forms will result in the rejection of the Bidder's offer. The Bid submittal forms must be legible. Bidders shall use typewriter, computer, or ink. All changes must be crossed out and initialed in ink. Failure to comply with these requirements may cause the Bid to be rejected.
b. An authorized agent of the Bidder's firm must sign the Bid submittal form. Failure to sign the Signature Page of the Bid shall render the Bid non-responsive.
c. The Bidder may be considered non-responsive if Bids are conditioned upon modifications, changes, or revisions to the terms and conditions of this Solicitation.
d. The Bidder may submit alternate Bid(s) for the same Solicitation provided that such offer is allowable under the terms and conditions. The alternate Bid must meet or exceed the minimum requirements and be submitted as a separate Bid submittal marked "Alternate Bid".
e. When there is a discrepancy between the unit prices and any extended prices, the unit prices will prevail.
f. Late Bids will not be accepted and will be returned to the sender unopened. It is the Bidder's responsibility to ensure timely delivery by the due date and time, and at the place stated in this Solicitation. No exceptions will be made due to weather, carrier, traffic, illness, or other issues.

10. CANCELLATION OF BID SOLICITATION

The Village of Palm Springs reserves the right to cancel, in whole or in part, any Invitation to Bid when it is in the best interest of the Village

deems necessary

11. AWARD OF CONTRACT

a. The contract may be awarded to the responsive and responsible Bidder meeting all requirements as set forth in the Solicitation. The Village reserves the right to reject any and all Bids, to waive irregularities or technicalities, and to re-advertise for all or any part of this Bid Solicitation as deemed in its best interest. The Village shall be the sole judge of its best interest.
b. The Village reserves the right to reject any and all Bids if it is determined that prices are excessive, best offers are determined to be unreasonable, or it is otherwise determined to be in the Village's best interest to do so.
c. The Village reserves the right to negotiate prices with the responsive and responsible low Bidder, provided that the scope of work of this Solicitation remains the same.
d. The Bidder's performance as a prime contractor or subcontractor on previous Village contracts shall be taken into account in evaluating the Bid received for this Bid Solicitation.
e. The Bid Solicitation, any addenda and/or properly executed modifications, the signed Agreement, the purchase order, and any change order(s) shall constitute the contract.
f. Award of this Bid may be predicated on compliance with, and submittal of all required documents as stipulated in the Bid Solicitation.
g. The Village reserves the right to request and evaluate additional information from any Bidder after the submission deadline as the Village deems necessary.

12. CONTRACT EXTENSION

The Village Manager reserves the right to automatically extend any agreement for a maximum period not to exceed ninety (90) calendar days in order to provide Village departments with continual service and supplies while a new agreement is being solicited, evaluated, and/or awarded.

13. WARRANTY

All warranties express and implied shall be made available to the Village for goods and services covered by this Bid Solicitation. All goods furnished shall be fully guaranteed by the awarded Bidder against factory defects and workmanship. At no expense to the Village, the awarded Bidder shall correct any and all apparent and latent defects that may occur within the manufacturer's standard warranty.

14. ESTIMATED QUANTITIES

Estimated quantities or dollars are for Bidder's guidance only: (a) estimates are based on the Village's anticipated needs and/or usage; and (b) the Village may use these estimates to determine the low Bidder. No guarantee is expressed or implied as to quantities or dollars that will be used during the contract period. The Village is not obligated to place any order for the given amount subsequent to the award of this Bid Solicitation.

15. NON-EXCLUSIVITY

It is the intent of the Village to enter into an agreement with the awarded Bidder that will satisfy its needs as described herein. However, the Village reserves the right as deemed in its best interest to perform, or cause to be performed, the work and services, or any portion thereof, herein described in any manner it sees fit, including but not limited to, award of other contracts, use of any contractor, or perform the work with its own employees.

16. CONTINUATION OF WORK

Any work that commences prior to and will extend beyond the expiration date of the current contract period shall, unless terminated by mutual written agreement between the Village and the successful Bidder, continue until completion at the same prices, terms, and conditions.

17. BID PROTEST

Shall be in accordance with Section 58-6 of the Village Code.

18. LICENSES, PERMITS AND FEES

The awarded Bidder(s) shall hold and maintain at its own expense all licenses and/or certifications, obtain and pay for all permits and/or inspections, and comply with all laws, ordinances, regulations, and building code requirements applicable to the work required herein. Damages, penalties, and/or fines imposed on the Village or an awarded Bidder for failure to obtain and maintain required licenses, certifications, permits, and/or inspections shall be borne by the awarded Bidder.

19. SUBCONTRACTING

Unless otherwise specified in this Bid Solicitation, the successful Bidder shall not subcontract any portion of the work without the prior written consent of the Village. The ability to subcontract may be further limited by the Special Conditions. Subcontracting without the prior consent of the Village may result in termination of the contract for default.

20. ASSIGNMENTS

The awarded Bidder shall not assign, transfer, hypothecate, or otherwise dispose of this contract, including any rights, title, or interest therein, or its power to execute such contract to any person, company, or corporation without the prior written consent of the Village. Assignment without the prior consent of the Village may result in termination of the contract for default.

21. SHIPPING TERMS

Unless otherwise specified in the Bid Solicitation, prices quoted shall be F.O.B. Destination. Freight shall be included in the proposed price.

22. RESPONSIBILITIES AS EMPLOYER

The employee(s) of the awarded Bidder shall be considered to be at all times its employee(s), and not an employee(s) or agent(s) of the Village or any of its departments. The awarded Bidder shall provide physically competent employee(s) capable of performing the work as required. The Village may require the awarded bidder to remove any employee it deems unacceptable. All employees of the awarded bidder shall wear proper identification.

It is the awarded bidder's responsibility to ensure that all its employees and subcontractors comply with the employment regulations required by the US Department of Homeland Security. The Village shall have no responsibility to check or verify the legal immigration status of any employee of the awarded Bidder.

23. INDEMNIFICATION

The awarded Bidder shall indemnify and hold harmless the Village and its officers, employees, agents, and instrumentalities from any and all liability, losses or damages, including attorney's fees and costs of defense, which the Village or its officers, employees, agents, or instrumentalities may incur as a result of claims, demands, suits, causes of actions, or proceedings of any kind or nature arising out of, relating to, or resulting from the performance of the agreement by the awarded Bidder or its employees, agents, servants, partners, principals, or subcontractors. The awarded Bidder shall pay all claims and losses in connection therewith, and shall investigate and defend all claims, suits, or actions of any kind or nature in the name of the Village, where applicable, including appellate proceedings, and shall pay all costs, judgments, and attorney's fees which may be incurred thereon. The awarded Bidder expressly understands and agrees that any insurance protection required by this contract agreement or otherwise provided by the awarded Bidder shall in no way limit the responsibility to indemnify, keep and save harmless, and defend the Village or its officers, employees, agents, and instrumentalities as herein provided.

24. COLLUSION

A Bidder recommended for award as the result of a competitive Solicitation for any Village purchases of supplies, materials, and services (including professional services, other than professional architectural, engineering, and other services subject to Sec. 287.055 Florida Stats.), purchase, lease, permit, concession, or management agreement shall, within five (5) business days of the filing of such recommendation, submit an affidavit under the penalty of perjury, on a form provided by the Village, stating either that the contractor is not related to any of the other parties Bidding in the competitive Solicitation or identifying all related parties, as defined in this Section, which Bid in the Solicitation; and attesting that the contractor's Bid is genuine and not a sham or collusive or made in the interest or on behalf of any person not therein named, and that the contractor has not, directly or indirectly, induced or solicited any other Bidder to put in a sham Bid, or any other person, firm, or corporation to refrain from proposing, and that the Bidder has not in any manner sought by collusion to secure to the Bidder an advantage over any other Bidder. In the event a recommended Bidder identifies related parties in the competitive Solicitation its Bid shall be presumed to be collusive and the recommended Bidder shall be ineligible for award unless that presumption is rebutted to the satisfaction of the Village. Any person or entity that fails to submit the required affidavit shall be ineligible for contract award.

25. MODIFICATION OF CONTRACT

The contract may be modified by mutual consent, in writing, through the issuance of a modification to the contract, a supplemental agreement, purchase order, or change order, as appropriate.

26. TERMINATION FOR CONVENIENCE

The Village, at its sole discretion, reserves the right to terminate any contract entered into pursuant to this Invitation to Bid (ITB) with or without cause immediately upon providing written notice to the awarded Bidder. Upon receipt of such notice, the awarded Bidder shall not incur any additional costs under the contract. The Village shall be liable only for reasonable costs incurred by the awarded Bidder prior to the date of the notice of termination. The Village shall be the sole judge of "reasonable costs."

27. TERMINATION FOR DEFAULT

The Village reserves the right to terminate this contract, in part or in whole, or place the vendor on probation in the event the awarded Bidder fails to perform in accordance with the terms and conditions stated herein by providing written notice of such failure or default and by specifying a reasonable time period within which the awarded Bidder must cure any such failure to perform or default. If the awarded Bidder fails to cure the default within the time specified, the Village may then terminate the subject contract by providing written notice to the awarded Bidder. The Village further reserves the right to suspend or debar the awarded Bidder in accordance with the appropriate Village ordinances, resolutions, and/or policies. The vendor will be notified by letter of the Village's intent to terminate. In the event of termination for default, the Village may procure the required goods and/or services from any source and use any method deemed in its best interest. All re-procurement costs shall be borne by the incumbent Bidder.

28. FRAUD AND MISREPRESENTATION

Any individual, corporation, or other entity that attempts to meet its contractual obligations with the Village through fraud, misrepresentation, or material misstatement, may be debarred as set forth by the Village Code. The Village, as a further sanction, may terminate or cancel any other contracts with such individual, corporation, or entity. Such individual or entity shall be responsible for all direct or indirect costs associated with termination or cancellation, including attorney's fees.

29. ACCESS AND AUDIT OF RECORDS

The Village reserves the right to require the awarded Bidder to submit to an audit by an auditor of the Village's choosing at the awarded Bidder's expense. The awarded Bidder shall provide access to all of its records, which relate directly or indirectly to this Agreement, at its place of business during regular business hours. The awarded Bidder shall retain all records pertaining to this Agreement, and upon request, make them available to the Village for three (3) years following expiration of the Agreement. The awarded Bidder agrees to provide such assistance as may be necessary to facilitate the review or audit by the Village to ensure compliance with applicable accounting and financial standards.

30. OFFICE OF THE INSPECTOR GENERAL

Palm Beach County has established the Office of the Inspector General, which is authorized and empowered to review past, present, and proposed County programs, contracts, transactions, accounts and records. The Inspector General (IG) has the power to subpoena witnesses, administer oaths, require the production of records, and monitor existing projects and programs. The Inspector General may, on a random basis, perform audits on all Village contracts.

31. PRE-AWARD INSPECTION

The Village may conduct a pre-award inspection of the Bidder's site or hold a pre-award qualification hearing to determine if the Bidder is capable of performing the requirements of this Bid Solicitation.

32. PROPRIETARY AND/OR CONFIDENTIAL INFORMATION

Bidders are hereby notified that all information submitted as part of, or in support of Bid submittals will be available for public inspection after the opening of Bids in compliance with Chapter 119 of the Florida Statutes, popularly known as the "Public Records Law." The Bidder shall not submit any information in response to this Solicitation which the Bidder considers to be a trade secret, proprietary, or confidential. The submission of any information to the Village in connection with this Solicitation shall be deemed conclusively to be a waiver of any trade secret or other protection which would otherwise be available to the Bidder. In the event that the Bidder submits information to the Village in violation of this restriction, either inadvertently or intentionally, and clearly identifies that information in the Bid as protected or confidential, the Village may, in its sole discretion, either (a) communicate with the Bidder in writing in an effort to obtain the Bidder's withdrawal of the confidentiality restriction, or (b) endeavor to redact and return that information to the Bidder as quickly as possible, and if appropriate, evaluate the balance of the Bid. The redaction or return of information pursuant to this clause may render a Bid non-responsive.

33. HEALTH INSURANCE PORTABILITY AND ACCOUNTABILITY ACT (HIPAA)

Any person or entity that performs or assists the Village of Palm Springs with a function or activity involving the use or disclosure of "individually identifiable health information (IIHI) and/or Protected Health Information (PHI) shall comply with the Health Insurance Portability and Accountability Act (HIPAA) of 1996. HIPAA mandates for privacy, security, and electronic transfer standards include, but are not limited to:

a. Use of information only for performing services required by the contract or as required by law;
b. Use of appropriate safeguards to prevent non- permitted disclosures;
c. Reporting to the Village of Palm Springs any non- permitted use or disclosure;
d. Assurances that any agents and subcontractors agree to the same restrictions and conditions that apply to the Bidder and reasonable assurances that IIHI/PHI will be held confidential;
e. Making Protected Health Information (PHI) available to the customer;
f. Making PHI available to the customer for review and amendment, and incorporating any amendments requested by the customer;
g. Making PHI available to the Village of Palm Springs for an accounting of disclosures; and
h. Making internal practices, books, and records related to PHI available to the Village of Palm Springs for compliance audits. PHI shall maintain its protected status regardless of the form and method of transmission (paper records and/or electronic transfer of data). The Bidder must give its customers written notice of its privacy information practices, including specifically, a description of the types of uses and disclosures that would be made with protected health information.

34. ADDITIONAL FEES AND SURCHARGES

Unless provided for in the contract/agreement, the Village will not make any additional payments such as fuel surcharges, demurrage fees, or delay-in-delivery charges.

35. COMPLIANCE WITH FEDERAL STANDARDS

All items to be purchased under this contract shall be in accordance with all governmental standards, to include, but not be limited to, those issued by the Occupational Safety and Health Administration (OSHA), the National Institute of Occupational Safety Hazards (NIOSH), and the National Fire Protection Association (NFPA).

36. COMPLIANCE WITH FEDERAL REGULATIONS DUE TO USE OF FEDERAL FUNDING

If the goods or services to be acquired under this Solicitation are to be purchased, in part or in whole, with Federal funding, it is hereby agreed and understood that Section 60-250.4, Section 60-250.5, and Section 60-741.4 of Title 41 of the United States Code, which addresses Affirmative Action requirements for disabled workers, is incorporated into this Solicitation and resultant contract by reference.

37. BINDING EFFECT

All of the terms and provisions of this contract/agreement, whether so expressed or not, shall be binding upon, inure to the benefit of, and be enforceable by the parties and their respective legal representatives, successors, and permitted assigns.

38. SEVERABILITY

The Village's obligation pursuant to any contract or agreement entered into in accordance with this Solicitation is specifically contingent upon the lawful appropriation of funds. Failure to lawfully appropriate funds for any contract or agreement awarded shall result in automatic termination of the contract or agreement. A non-appropriation event shall not constitute a default or breach of said contract or agreement by the Village.

39. NO THIRD-PARTY BENEFICIARY

No provision of this Contract is intended to, or shall be construed to, create any third-party beneficiary or to provide any rights to any person or entity not a party to this Contract, including but not limited to any citizen or employees of the Village and/or successful vendor.

40. GOVERNING LAW AND VENUE

This contract and all transactions contemplated by this agreement shall be governed by and construed and enforced in accordance with the laws of the State of Florida without regard to any contrary conflicts of law principle. Venue of all proceedings in connection herewith shall lie exclusively in Palm Beach County, Florida, and each party hereby waives whatever its respective rights may have been in the selection of venue.

41. ATTORNEY'S FEES

It is hereby understood and agreed that in the event any lawsuit in the judicial system, federal or state, is brought to enforce compliance with this contract or interpret same, or if any administrative proceeding is brought for the same purposes, each party shall pay their own attorney's fees and costs, including appellate fees and costs.

42. EQUAL OPPORTUNITY AND ANTI-DISCRIMINATION

The Village of Palm Springs complies with all laws prohibiting discrimination on the basis of age, race, gender, religion, creed, political affiliation, sexual orientation, physical or mental disability, color or national origin, and therefore is committed to assuring equal opportunity in the award of contracts and encourages small, local, minority, and female- owned businesses to participate.

During the performance of this contract, the awarded Bidder agrees it will not discriminate or permit discrimination in its hiring practices or in its performance of the contract. The awarded Bidder shall strictly adhere to the equal employment opportunity requirements and any applicable requirements established by the State of Florida, Palm Beach County and the federal government.

The awarded Bidder further acknowledges and agrees to provide the Village with all information and documentation that may be requested by the Village from time to time regarding the Solicitation, selection, treatment and payment of subcontractors, suppliers, and vendors in connection with this Contract.

43. AVAILABILITY OF CONTRACT TO OTHER VILLAGE DEPARTMENTS

It is agreed and understood that any Village department or agency may access this contract and purchase the goods or services awarded herein. Each Village department will issue a separate purchase order to the awarded Bidder for the department's specific purchases.

44. CRIMINAL HISTORY BACKGROUND CHECKS

Prior to hiring a contract employee or contracting with a Bidder, the Village may conduct a comprehensive criminal background check by accessing any Federal, State, or local law enforcement database available. The contract employee or Bidder will be required to sign an authorization for the Village to access criminal background information. The costs for the background checks shall be borne by the Village.

45. LABOR, MATERIALS, AND EQUIPMENT

Unless specified elsewhere in the Solicitation or resultant contract, all labor, materials, and equipment required for the performance of the requirements of the Contract shall be supplied by the awarded Bidder.

46. MINIMUM WAGE REQUIREMENTS

The awarded Bidder shall comply with all minimum wage and living wage requirements, such as Living Wage requirements, minimum wages based on Federal Law, minimum wages based on the Davis-Bacon Act, and the provisions of any other wages laws, as may be applicable to this Contract.

47. PACKING SLIP AND DELIVERY TICKET

A packing slip and/or delivery ticket shall accompany all items during delivery to the Village. The documents shall include information on the contract number or purchase order, any back-order items, and the number or quantity of items being delivered.

48. PURCHASE OF OTHER ITEMS

The Village reserves the right to purchase other related goods or services, not listed in the Solicitation, during the contract term. When such requirements are identified, the Village may request price quote(s) from the awarded Bidder(s) on the contract. The Village, at its sole discretion, will determine if the prices offered are reasonable, and may choose to purchase the goods or services from the awarded Bidder, another contract vendor, or a non-contract vendor.

49. PUBLIC RECORDS

Florida law provides that municipal records shall at all times be available to the public for inspection. Chapter 119, Florida Statutes, the Public Records Law, requires that all material submitted in connection with a Bid response shall be deemed to be a public record subject to public inspection upon award, recommendation for award, or thirty (30) days after Bid opening, whichever occurs first. Certain exemptions to public disclosure are statutorily provided for in Section 119.07, Florida Statutes. If the Bidder believes any of the information contained in his/her/its Bid is considered confidential and/or proprietary, inclusive of trade secrets as defined in Section 812.081, Florida Statutes, and is exempt from the Public Records Law, then the Bidder, must in its response, specifically identify the material which is deemed to be exempt and state the legal authority for the exemption. All materials that qualify for exemption from Chapter 119, Florida Statutes or other applicable law must be submitted in a separate envelope, clearly identified as “EXEMPT FROM PUBLIC DISCLOSURE” with the firm’s name and the Bid number clearly marked on the outside. The Village will not accept Bids when the entire Bid is labeled as exempt from disclosure. The Village’s determination of whether an exemption applies shall be final, and the Bidder agrees to defend, indemnify, and hold harmless the Village and the Village’s officers, employees, and agents, against any loss or damages incurred by any person or entity as a result of the Village’s treatment of records as public records.

The awarded Bidder(s) shall keep and maintain public records and fully comply with the requirements set forth at Section 119.0701, Florida Statues, as applicable; failure to do so shall constitute a material breach of any and all agreements awarded pursuant to this Solicitation.

50. CONFLICTS OF INTEREST

All Bidders must disclose with their Bid the name of any officer, director, or agent who is also an employee of the Village of Palm Springs. Further, all Bidders must disclose the name of any Village employee who has any interest, financial or otherwise, direct or indirect, of five percent (5%) or more in the Bidders’ firm or any of its branches. Failure to disclose any such affiliation will result in disqualification of the Bidder from this Invitation to Bid and may be grounds for further disqualification from participating in any future Bids with the Village.

51. PUBLIC ENTITY CRIMES

As provided in Section 287.133(2) (a), Florida Statutes, a person or affiliate who has been placed on the convicted vendors list following a conviction for a public entity crime may not submit a Bid on a contract to provide any goods or services to a public entity; may not submit a Bid on a contract with a public entity for the construction or repair of a public building or public work; may not submit Bids on leases of real property to a public entity; may not be awarded or perform work as a contractor, supplier, subcontractor, or consultant under a contract with any public entity.

52. OTHER GOVERNMENTAL AGENCIES

If a Bidder is awarded a contract as a result of this ITB, the Bidder shall allow other governmental agencies to access this contract and purchase the goods and services under the terms and conditions at the prices awarded, as applicable.

53. COMPLETION OF WORK AND DELIVERY

All work shall be performed, and all deliveries made in accordance with good commercial practice. The work schedule and completion dates shall be adhered to by the awarded Bidder(s), except in such cases where the completion date will be delayed due to acts of nature, force majeure, strikes, or other causes beyond the control of the awarded Bidder. In these cases, the awarded Bidder shall notify the Village of the delays in advance of the original completion so that a revised delivery schedule can be appropriately considered by the Village.

54. FAILURE TO DELIVER OR COMPLETE WORK

Should the awarded Bidder(s) fail to deliver or complete the work within the time stated in the contract, it is hereby agreed and understood that the Village reserves the authority to cancel the contract with the awarded Bidder and secure the services of another vendor to purchase the items or complete the work. If the Village exercises this authority, the Village shall be responsible for reimbursing the awarded Bidder for work that was completed, and items delivered and accepted by the Village in accordance with the contract specifications. The Village may, at its option, demand payment from the awarded Bidder, through an invoice or credit memo, for any additional costs over and beyond the original contract price which were incurred by the Village as a result of having to secure the services of another vendor.

55. CORRECTING DEFECTS

The awarded Bidder shall be responsible for promptly correcting any deficiency, at no cost to the Village, within three (3) calendar days after the Village notifies the awarded Bidder of such deficiency in writing. If the awarded Bidder fails to correct the defect the Village may (a) place the awarded Bidder in default of its contract; and/or (b) procure the products or services from another source and charge the awarded Bidder for any additional costs that are incurred by the Village for this work or items, either through a credit memorandum or through invoicing.

56. ACCIDENT PREVENTION AND BARRICADES

Precautions shall be exercised at all times for the protection of persons and property. All awarded Bidder performing services or delivering goods under this contract shall conform to all relevant OSHA, State, and County regulations during the course of such effort. Any fines levied by the above-mentioned authorities for failure to comply with these requirements shall be borne solely by the awarded Bidder. Barricades shall be provided by the awarded Bidder when work is performed in areas traversed by persons, or when deemed necessary by the Village.

57. OMISSIONS IN SPECIFICATIONS

The specifications and/or statement of work contained within this Solicitation describe the various functions and classes of work required as necessary for the completion of the project. Any omissions of inherent technical functions or classes of work within the specifications and/or statement of work shall not relieve the Bidder from furnishing, installing, or performing such work where required to the satisfactory completion of the project.

58. MATERIALS SHALL BE NEW AND WARRANTED AGAINST DEFECTS

The awarded Bidder hereby acknowledges and agrees that all materials, except where recycled content is specifically requested, supplied by the awarded Bidder in conjunction with this Solicitation and resultant contract shall be new, warranted for their merchantability, and fit for a particular purpose. In the event any of the materials supplied to the Village by the awarded Bidder are found to be defective or do not conform to specifications, (1) the materials may be returned to the awarded Bidder at the Bidder's expense and the contract cancelled; or (2) the Village may require the awarded Bidder to replace the materials at the Bidder's expense.

59. TOXIC SUBSTANCES/FEDERAL "RIGHT TO KNOW" REGULATIONS

The Federal "Right to Know" Regulation implemented by the Occupational Safety and Health Administration (OSHA) requires employers to inform their employees of any toxic substances to which they may be exposed in the workplace, and to provide training in safe handling practices and emergency procedures. It also requires notification to local fire departments of the location and characteristics of all toxic substances regularly present in the workplace.

Accordingly, the awarded Bidder(s) performing under this contract are required to provide two (2) complete sets of Material Safety Data Sheets to each Village department utilizing the any awarded products that are subject to these regulations. This information should be provided at the time when the initial delivery is made, on a department-by- department basis.

60. TAXES

The Village of Palm Springs is exempt from Federal and State taxes for tangible personal property.

61. BIDDER'S COSTS

The Village shall not be liable for any costs incurred by Bidders in responding to this Invitation to Bid (ITB).

62. SUBSTITUTION OF PERSONNEL

It is the intention of the Village that the awarded Bidder's personnel proposed for the contract shall be available for the initial contract term. In the event the awarded Bidder wishes to substitute personnel, the awarded Bidder shall propose personnel of equal or higher qualifications, and all replacement personnel are subject to the Village's approval. In the event the substitute personnel are not satisfactory to the Village, and the matter cannot be resolved to the satisfaction of the Village, the Village reserves the right to cancel the contract for cause.

63. FORCE MAJEURE

The Village and the awarded Bidder are excused from the performance of their respective obligations under the contract when and to the extent that their performance is delayed or prevented by any circumstances beyond their control, including fire, flood, explosion, strikes or other labor disputes, natural disasters, public emergency, war, riot, civil commotion, malicious damage, act or omission of any governmental authority, delay or failure or shortage of any type of transportation, equipment, or service from a public utility needed for their performance provided that:

a. The non-performing party gives the other party prompt written notice describing the particulars of the force majeure, including, but not limited to, the nature of the occurrence and its expected duration, and continues to furnish timely reports with respect thereto during the period of the force majeure.
b. The excuse of performance is of no greater scope and of no longer duration than is required by the force majeure.
c. No obligations of either party that arose before the force majeure causing the excuse of performance are excused as a result of the force majeure.
d. The non-performing party uses its best efforts to remedy its inability to perform. Notwithstanding the above, performance shall not be excused under this section for a period in excess of two (2) months, provided that in extenuating circumstances, the Village may excuse performance for a longer term. Economic hardship of the awarded Bidder shall not constitute a force majeure. The term of the contract shall be extended by a period equal to that during which either party's performance is suspended under this section

64. NOTICES

Notices shall be effective when received at the addresses specified in the contract/agreement. Changes in respective addresses to which such notices are to be directed may be made from time to time by either party by written notice to the other party. Facsimile and email transmissions are acceptable notice effective when received; however, facsimile and email transmissions received after 4:30 p.m. or on weekends or holidays will be deemed received on the next business day. The original of the notice must also be mailed to the receiving party.

Nothing contained in this section shall be construed to restrict the transmission of routine communications between representatives of the successful Bidder and the Village of Palm Springs.

65. POOL CONTRACTS

During the term of contracts and agreements that are executed as vendor pools, awarding vendors in prequalified pools of vendors, either as a general pool or by categories, sub-categories, or groups, the Village reserves the right to add new vendors to these contracts for goods or services not awarded for the original Solicitation or as part of the general pool category, sub-category or group. To be eligible to be added to these pool contracts, a vendor must meet the same eligibility requirements established in the original Invitation to Bid ().

66. FISCAL FUNDING OUT

The Village's obligation pursuant to any contract or agreement entered into in accordance with this Solicitation is specifically contingent upon the lawful appropriation of funds. Failure to lawfully appropriate funds for any contract or agreement awarded shall result in automatic termination of the contract or agreement.

67. PURCHASE ORDER

The Village will not accept any goods delivered or services performed unless a duly authorized purchase order has been issued for said goods and/or services. The purchase order number must appear on all invoices, packing slips and all correspondence concerning the order.

68. DELIVERIES

Deliveries are to be made Monday through Friday, excluding Village holidays, unless otherwise stipulated.

69. SALES PROMOTIONS / PRICE REDUCTIONS

Should sales promotions occur during the term of the order/contract that lower the price of the procured item, the successful vendor shall extend to the Village the lower price offered by the manufacturer on any such promotional item. Further, any price decreases effectuated during the order/contract period by reason of market change or otherwise, shall be passed on to the Village. Additionally, any time after award, the vendor may offer a reduced price which shall remain in effect for the duration of the order/contract.

70. E-VERIFY

Pursuant to Section 448.095(2), Florida Statutes, effective January 1, 2021, Vendor shall:

(a) Register with and use the E-Verify system to verify the work authorization status of all newly hired employees and require all subcontractors (providing services or receiving funding under this Agreement) to register with and use the E-Verify system to verify the work authorization status of all the subcontractors' newly hired employees.
(b) Secure an affidavit from all subcontractors (providing services or receiving funding under this Agreement) stating that the subcontractor does not employ, contract with, or subcontract with an unauthorized alien.
(c) Maintain copies of all subcontractor affidavits for the duration of this Agreement.
(d) Comply fully, and ensure all its subcontractors comply fully, with Section 448.095, Florida Statutes.
(e) Be aware that a violation of Section 448.09, Florida Statutes (Unauthorized aliens; employment prohibited) shall be grounds for termination of this Agreement; and
(f) Be aware that if the Village terminates this Agreement under Section 448.095(2)(c), Florida Statutes Vendor may not be awarded a public contract for at least 1 year after the date on which the Agreement is terminated and will be liable for any additional costs incurred by the Village as a result of the termination of the Agreement.

SPECIAL CONDITIONS

71. PURPOSE

The purpose of this Solicitation is to obtain bids from contractors to provide the Village with Submersible Wastewater Pumps, in accordance with the terms, conditions, and specifications contained in this Invitation to Bid.

72. TERM OF CONTRACT

The Contract shall commence upon the date of the duly executed Agreement and shall remain in effect for a term of three (3) year(s).

73. OPTIONS TO RENEW

Upon mutual agreement of the Village Manager and the successful Bidder, the Agreement may be renewed for up to an additional two (2) year(s).

74. METHOD OF AWARD: LOWEST PRICE

If the Bidder is awarded a contract under this Solicitation, the prices offered by the Bidder shall remain fixed and firm during the performance of the Work.

75. PRICES SHALL BE FIXED AND FIRM

If the Bidder is awarded a contract under this Solicitation, the prices offered by the Bidder shall remain fixed and firm during the performance of the Work.

76. PRICE ADJUSTMENTS

Prior to, or upon completion, of the first year of the Contract term, and every 12-month anniversary thereafter, the Village may consider an adjustment to prices based on the following:

The actual amount of increase in awarded Bidder's costs from the manufacturer or its supplier.

It is the awarded Bidder's responsibility to request any pricing adjustment under this provision. For any adjustment to commence, the awarded Bidder's request for adjustment should be submitted at least sixty (60) days prior to the anniversary date. The adjustment requested shall not be in excess of the relevant pricing increase. All requests must include documentation of the increase in price to awarded Bidder. If a timely adjustment request is not received from the awarded Bidder, the Village may exercise its Option to Renew the Contract for another Term without any pricing adjustment.

77. EQUAL PRODUCTS

Only the referenced manufacturers will be considered unless noted otherwise in the technical specifications.

78. INSURANCE

The awarded Bidder shall not commence any performance pursuant to the terms of this Solicitation until certification or proof of insurance has been received by the Finance Department and approved.

The required insurance coverage is to be issued by an insurance company authorized and licensed to do business in the State of Florida, with the minimum rating of A- VIII or better, in accordance with the latest edition of A.M. Best's Insurance Guide. This insurance shall be documented in certificates of insurance which provides that the Village of Palm Springs shall be notified at least thirty (30) days in advance of cancellation, non-renewal, or adverse change. The receipt of certificates or other documentation of insurance or policies or copies of policies by the Village or by any of its representatives, which indicate less coverage than is required, does not constitute a waiver of the awarded Bidder's obligation to fulfill the insurance requirements herein. Deductibles must be acceptable to the Village of Palm Springs.

The awarded Bidder must submit a current Certificate of Insurance, naming the Village of Palm Springs as an additional insured and list as such on the insurance certificate. New certificates of insurance are to be provided to the Village upon expiration.
The awarded Bidder shall provide insurance coverage as follows, and shall carry:

a. Workers' Compensation Insurance – as required by law.
b. Employer's Liability Insurance - $100,000 per occurrence, $100,000 for each disease, and $500,000 for aggregate disease
c. Comprehensive General Liability Insurance – with limits of not less than $1,000,000 per occurrence and $2,000,000 in the aggregate for Bodily Injury and Property Damage.
d. Automobile Liability Insurance - for owned, non-owned and hired vehicles – with a limit of not less than $1,000,000 per occurrence, combined single limit for Bodily Injury Liability and Property Damage Liability.

If no deductible for insurance is referenced above, the Village reserves the right to require such deductibles which shall be determined by the Finance Department, but not less than
$25,000 per claim.

The Comprehensive General Liability insurance policy must include coverage that is not more restrictive than the latest edition of the Comprehensive General Liability Policy, without restrictive endorsements, as filed by the Insurance Services Offices, and the policy must include coverage's for

premises and/or operations, independent contractors, products and/or completed operations for contracts, contractual liability, broad form contractual coverage, broad form property damage, products, completed operations, and personal injury. Personal injury coverage shall include coverage that has the Employee and Contractual Exclusions removed.

79. CERTIFICATIONS

Any Bidder that submits an offer in response to this Solicitation shall, at the time of such offer, hold all necessary certifications issued by the State or County Examining Board qualifying the Bidder to perform the work proposed for this project. If other professions or trades are required in conjunction with this Solicitation and such work/services will be performed or provided by a subcontractor(s), an applicable Certificate of Competency issued to the subcontractor(s) shall be submitted with the Bidder's offer; provided, however, that the Village may at its option and in its best interest allow the Bidder to supply the subcontractor(s) certificate to the Village during the evaluation period.

All architects or engineers on this project must possess current Florida professional registrations or licenses for the architectural and engineering services which they intend to provide.

80. METHOD OF PAYMENT: INVOICE FOR COMPLETED WORK

The awarded Bidder shall submit an invoice to the Village for progress payments for work that has been completed, and has been inspected and accepted by the Village. The date of the invoices shall not exceed thirty (30) calendar days from the completion of that portion of the work. Under no circumstances shall the invoice be submitted to the Village in advance of the completion and acceptance of the work.

The invoice shall contain the following basic information: the awarded Bidder's name and address, invoice number, date of invoice, description of the goods or service, the contract number, purchase order number, and any discounts.

The Village prides itself on paying its vendors promptly and efficiently, and as such requires that vendors accept payment via wire transfer, ACH (direct deposit), or an appropriate electronic payment method. All payments shall be made in accordance with the Florida Prompt Payment Act, Section 218.74, Florida Statutes, upon presentation of a proper invoice by the awarded Bidder.

81. WARRANTY REQUIREMENTS

In addition to all other warranties that may be supplied by the Bidder or required in the technical specifications, the awarded Bidder shall warrant its products and/or service against faulty labor and/or defective material, for a minimum period of one (1) year from the date of acceptance of the labor, materials and/or equipment by the Village. This warranty requirement shall remain in force for the full period, regardless of whether the awarded Bidder is under contract with the Village at the time of defect. Any payment by the Village on behalf of the services received from the awarded Bidder does not constitute a waiver of these warranty provisions.

82. ADDITIONAL FACILITIES

Although this Solicitation and resultant Contract may identify specific facilities or locations, it is hereby agreed and understood that any Village department or agency facility or related products may be added to this Contract at the option of the Village, for similar products or services. The awarded Bidder shall be invited to submit price quotes for these additional facilities or location. If these quotes are determined to be fair and reasonable, then the additional work will be awarded to the awarded Bidder by formal modification of the Contract or Purchase Order. The Village may determine to obtain price quotes for the additional facilities from non-contract awarded Bidder(s) in the event that fair and reasonable pricing is not obtained from the awarded Bidder, or for other reasons, at the Village's discretion.

83. PATENTS AND ROYALTIES

The awarded Bidder, without exception, shall indemnify and hold harmless the Village and its employees from liability of any nature or kind, including cost and expenses for, or as a result of, any copyrighted, patented, or unpatented invention, process, or article manufactured by the awarded Bidder. The awarded Bidder has no liability when such claim is solely and exclusively due to the combination, operation, or use of any article supplied hereunder with equipment or data not supplied by awarded Bidder or is based solely and exclusively upon the Village's alteration of the article. The Village will provide prompt written notification of a claim of copyright or patent infringement.

Further, if such a claim is made or is pending, the awarded Bidder may, at its option and expense, procure for the Village the right to continue use of, replace or modify the article to render it non-infringing. (If none of the alternatives are reasonably available, the Village agrees to return the article on request to the awarded Bidder and receive reimbursement, if any, as may be determined by a court of competent jurisdiction.) If the awarded Bidder uses any design, device, or materials covered by letters, patent or copyright, it is mutually agreed and understood without exception that the contract prices shall include all royalties or cost arising from the use of such design, device, or materials in any way involved in the work.

84. RELEASE OF CLAIM REQUIRED

The awarded Bidder must provide the Village with duly executed affidavits (subcontractor's statement of satisfaction) or releases of claim from all subcontractors and suppliers who have performed any work or supplied any materials for on the project as of that date. The affidavit or releases shall certify that said subcontractors and suppliers have been paid their proportionate share of all previous partial payments to the awarded Bidder. In the event such affidavits cannot be furnished, the awarded Bidder may submit an executed consent of surety to requisition payment; identifying the subcontractors and suppliers with the amounts for which the statement of satisfaction cannot be furnished. If the awarded Bidder fails to provide a consent of surety to requisition payment, the amount in dispute will be withheld until either the statement of satisfaction is furnished, or the consent of surety to requisition payment is furnished.

85. SUBCONTRACTORS OF WORK SHALL BE IDENTIFIED

As part of its Bid, the Bidder must identify any and all subcontractors that will be used in the performance of the proposed work, their capabilities and experience, and the portion of the work to be done by the subcontractor. The competency of the subcontractor(s) with respect to experience, skill, responsibility and business standing shall be considered by the Village when making the award in the best interest of the Village. If the Bidder fails to identify any and all sub- contractors in the Bid, the Bidder may be allowed to submit this documentation during the Bid evaluation period, if such action is in the best interest of the Village.

86. OTHER FORMS OR DOCUMENTS

If the Village is required by the awarded Bidder to complete and execute any other forms or documents in relation to this Solicitation, the terms, conditions, and requirements in this Solicitation shall take precedence to any and all conflicting or modifying terms, conditions or requirements of the Bidder's forms or documents

Specifications
ITB # 2022B-010

SUBMERSIBLE WASTEWATER PUMPS, ACCESSORIES, AND SERVICE

SUBMERSIBLE WASTEWATER PUMPS

A. Impeller Casing: The impeller casing shall have well-rounded water passages and smooth interior surfaces free from cracks, porosity, blowholes, or other irregularities. The discharge nozzle shall be flanged and sufficiently rigid to support the guide rail-mounted pumping unit under all operating conditions.

B. Impeller: The impeller shall be constructed of high-chrome hardened iron (HRC 60 minimum) or ceramic coated iron for increased protection against abrasion and corrosion. The impeller shall be dynamically balanced and securely locked to the shaft by means of a key and self-locking bolt or nut.

C. Wearing Rings/Plates: Renewable 316 SS wearing rings or plate shall be provided in the casing and on the impeller. The rings shall be positively locked in place.

D. Oil Chamber Housing: The oil chamber shall contain a drain plug and vent plug.

E. Coatings: All metal surfaces in contact with the pumped media, other than stainless steel, shall be coated in the factory with a zinc primer and polyester resin of high solids epoxy finish.

F. Seals:

1. Each pump shall be provided with two mechanical rotating shaft seals arranged in tandem and running in an oil chamber. The lower seal unit between the pump and the oil chamber shall contain one stationary and one positively driven rotating tungsten carbide ring. Mechanical seals shall be silicon carbide or tungsten carbide. Each interface shall be held in contact by an independent spring system designed to withstand maximum suction submergence. The seals shall require neither maintenance nor adjustment and shall be readily accessible for inspection and replacement.

2. Shaft seals lacking positively driven rotating members or conventional double mechanical seals which use a common single or double spring acting between the upper and lower units and requiring a pressure differential to offset external pressure and effect sealing will not be acceptable. The seals shall not rely upon the pumped media for lubrication and shall not be damaged if the pumps are run un-submerged for extended periods while pumping under load.

G. Sealing of mating Surfaces: All mating surfaces of major components shall be machined and fitted with O-rings where water-tight sealing is required. Sealing shall be accomplished by O-ring contact on four surfaces and O-ring compression in two planes, without reliance on a specific fastener torque or tension to obtain a watertight joint. The use of elliptical O-rings, gaskets, or seals requiring a specific fastener torque value to obtain and maintain compression and watertightness will not be acceptable. The use of secondary sealing compounds, gasket cement, grease, or other devices to obtain watertight joints will not be acceptable.

H. Discharge Base:

1. The pump and motor assembly shall be automatically connected to and supported by the discharge base and guiderails so that the unit can be removed from the wet well and replaced without the need for operating personnel to enter the pump intake basin.

I. Acceptable Pump Manufacturers:

1. Xylem
2. WILO
3. Barnes
4. Ebara

ELECTRIC MOTORS

A. Each pump shall be driven by an air-filled, totally submersible electric motor manufactured by the pump manufacturer. Each motor shall have a service factor of 1.15 the motor nameplate rating shall exceed the maximum horsepower required by the pump in the operating head of the entire pump curve. The pump shall operate over the entire range of the pump curve without overloading the motor or the operating in the service factor of the motor. The stator housing shall be an air-filled, watertight casing. Motor insulation shall be moisture resistant, Class H, 180 degrees C. each motor shall be NEMA Design B for continuous duty at 40 degrees C. ambient temperature and designed for at least 10 starts per hour.

B. The motor bearings shall be antifriction, permanently lubricated type. The lower bearing shall be fixed to carry the pump thrust and the upper bearing free to move axially. The bearing shall have a calculated AFBMA L10 Life rating of 50,000 hours when operating at maximum operating head range.

C. Each motor shall be capable of continuous operation in air (un-submerged) for at least 24 hours under pump full load conditions without exceeding the temperature rise limits for the motor insulation system

D. Each pump shall be equipped with one or more multi-conductor cable assemblies for power and control. Each multi-conductor assembly containing power cables shall be provided with a separate grounding conductor. Each cable assembly shall bear a permanently embossed code or legend indicating that the cable is suitable for submerged use. No splicing of cables shall be allowed.

E. The cable entry water seal shall include a strain relief and a grommet type seal designed so that a specific fastener torque is not required to ensure a watertight, submersible seal. The cable entry junction box and motor shall be separated by a stator lead sealing gland or a terminal board. The junction box shall isolate the motor interior from moisture gaining access through the top of the stator housing.

WARRANTY

A. Warranty shall be a 5-year full manufacturer’s guarantee. The guarantee shall be against the manufacturing and/or design inadequacies, materials, and workmanship not in conformity,

improper assembly, hidden damage, or other circumstances which would cause the equipment to fail under normal conditions.

B. The manufacturer shall replace equipment which fails with the term of the guarantee with reasonable promptness free of charge, including all shipping costs.

REMAINDER OF THIS PAGE INTENTIONALLY LEFT BLANK
SIGNATURE PAGE TO FOLLOW

BID SUBMITTAL SIGNATURE PAGE – ITB # 2022B-010

* PLEASE AFFIX SIGNATURE WHERE INDICATED
(FAILURE TO DO SO SHALL RESULT IN THE REJECTION OF YOUR ITB)

By signature on this document, Bidder acknowledges and agrees that its offer includes and accepts all terms, conditions, and specifications of the Village's ITB solicitation as originally published, without exception, change or alteration of any kind, except as may have been published by the Village in official amendments prior to the submission time.

FIRM NAME: **(Enter the entire legal name of the quoting entity)**	DATE:
* **SIGNATURE**: _____	PRINT NAME: PRINT TITLE:
ADDRESS: _____	
CITY / STATE: _____	ZIP CODE: _____
TELEPHONE # ( ) TOLL FREE # ( )	E-MAIL: FAX #: ( )
APPLICABLE LICENSE(S) NUMBER #_____	TYPE: _____
FEDERAL ID # _____	

ACKNOWLEDGEMENT OF ADDENDA
ITB # 2022B-010

SUBMERSIBLE WASTEWATER PUMPS, ACCESSORIES, AND SERVICE

INSTRUCTIONS: COMPLETE PART I OR PART II, WHICHEVER APPLIES

PART I:

List below the dates of issue for each addendum received in connection with this Solicitation:

Addendum #1, Dated _____

Addendum #2, Dated _____

Addendum #3, Dated _____

Addendum #4, Dated _____

Addendum #5, Dated _____

PART II:

NO ADDENDUM WAS RECEIVED IN CONNECTION WITH THIS SOLICITATION

_____
Firm Name

_____
Signature

_____
Name and Title (Print or Type)

_____
Date

AFFIDAVITS, PERFORMANCE AND PAYMENT BONDS FORMAT, LETTER OF CREDIT FORMAT

AFFIDAVITS

The forms listed below must be completed by an official having legal authorization to contractually bind the company or firm. Each signature represents a binding commitment upon the Bidder to provide the goods and/or services offered to the Village if the Bidder is determined to be the lowest responsive and responsible Bid.

a. Bid Submittal Signature Page

b. Acknowledgement of Addenda

c. Conflict of Interest Disclosure Form

d. Notification of Public Entity Crimes Law

e. Notification of Public Records Law

f. Drug-Free Workplace

g. Non-Collusion Affidavit

h. Bidder Qualification Form

CONFLICT OF INTEREST DISCLOSURE FORM

The award of this contract is subject to the provisions of Chapter 112, *Florida Statutes*. All Bidders must disclose within their Bid: the name of any officer, director, or agent who is also an employee of the Village of Palm Springs.

Furthermore, all Bidder must disclose the name of any Village employee who owns, directly, or indirectly, an interest of more than five percent (5%) in the Bidder's firm or any of its branches.

The purpose of this disclosure form is to give the Village the information needed to identify potential conflicts of interest for evaluation team members and other key personnel involved in the award of this contract.

The term "conflict of interest" refers to situations in which financial or other personal considerations may adversely affect, or have the appearance of adversely affecting, an employee's professional judgment in exercising any Village duty or responsibility in administration, management, instruction, research, or other professional activities.

Please check one of the following statements and attach additional documentation if necessary:

To the best of our knowledge, the undersigned firm has no potential conflict of interest due to any other Cities, Counties, contracts, or property interest for this Bid.

The undersigned firm, by attachment to this form, submits information which may be a potential conflict of interest due to other Cities, Counties, contracts, or property interest for this Bid.

Acknowledged by: _____

Firm Name: _____

Signature:_____

Name and Title (Print or Type):_____

Date: _____

NOTIFICATION OF PUBLIC ENTITY CRIMES LAW

Pursuant to Section 287.133, *Florida Statutes*, you are hereby notified that a person or affiliate who has been placed on the convicted contractors list following a conviction for a public entity crime may not submit a Bid on a contract to provide any goods or services to a public entity, may not submit a Bid on a contract with a public entity for the construction or repair of a public building or public work, may not submit Bids on leases or real property to a public entity, may not be awarded or perform work as a contractor, supplier, sub-Bidder, or consultant under a contract with any public entity, and may not transact business with any public entity in excess of the threshold amount provided in Section 287.017 [F.S.] for Category Two [$35,000.00] for a period of thirty-six (36) months from the date of being placed on the convicted contractors list.

Acknowledged by: _____

Firm Name: _____

Signature: _____

Name and Title (Print or Type): _____

Date: _____

Notification of Public Records Law Pertaining to Public Contracts and Requests for Contractor Records Pursuant to Chapter 119, *Florida Statutes*

Pursuant to Chapter 119, Florida *Statutes*, Contractor shall comply with the public records law by keeping and maintaining public records required by the Village of Palm Springs in order to perform the service. Upon request from the Village of Palm Springs' custodian of public records, Contractor shall provide the Village of Palm Springs with a copy of the requested records or allow the records to be inspected or copied within a reasonable time at a cost that does not exceed the cost provided in Chapter 119, *Florida Statutes* or as otherwise provided by law. Contractor shall ensure that public records that are exempt or confidential and exempt from public records disclosure requirements are not disclosed except as authorized by law for the duration of the contract term and following completion of the contract If the Contractor does not transfer the records to the Village of Palm Springs. Contractor upon completion of the contract, shall transfer, at no cost, to the Village of Palm Springs all public records in possession of the Contractor or keep and maintain public records required by the Village of Palm Springs in order to perform the service. If the Contractor transfers all public records to the Village of Palm Springs upon completion of the contract, the Contractor shall destroy any duplicate public records that are exempt or confidential and exempt from public records disclosure requirements. If the Contractor keeps and maintains public records upon completion of the contract, the Contractor shall meet all applicable requirements for retaining public records. All records stored electronically must be provided to the Village of Palm Springs, upon request from the Village of Palm Springs' custodian of public records, in a format that is compatible with the information technology systems of the Village of Palm Springs.

IF THE CONTRACTOR HAS QUESTIONS REGARDING THE APPLICATION OF CHAPTER 119, FLORIDA STATUTES, TO THE CONTRACTOR'S DUTY TO PROVIDE PUBLIC RECORDS RELATING TO THIS CONTRACT, CONTACT THE CUSTODIAN OF PUBLIC RECORDS OR DESIGNEE AT 561-584-8200 Ext. 8431, kwynn@vpsfl.org, OR BY MAIL AT VILLAGE OF PALM SPRINGS, 226 CYPRESS LANE, PALM SPRINGS, FL 33461.

Acknowledged by:

_____

Firm Name

_____

Signature

_____

Name and Title (Print or Type)

_____

Date

DRUG-FREE WORKPLACE

_____is a drug-free workplace and has
(Company Name)
a substance abuse policy in accordance with and pursuant to Section 440.102, *Florida Statutes*.

Acknowledged by: _____

Firm Name: _____

Signature: _____

Name and Title (Print or Type): _____

Date: _____

NON-COLLUSION AFFIDAVIT

STATE OF _____ COUNTY OF _____

Before me, the undersigned authority, personally appeared _____, who, after being by me first duly sworn, deposes and says of his/her personal knowledge that:

a. He / She is _____of _____, the Bidder that has submitted a Bid to perform work for the following:

ITB No.: _____ Title: _____

b. He / She is fully informed respecting the preparation and contents of the attached Request for Bids, and of all pertinent circumstances respecting such Solicitation. Such Bid is genuine and is not a collusive or sham Bid.

c. Neither the said Bidder nor any of its officers, partners, owners, agents, representatives, employees, or parties in interest, including this affiant, has in any way colluded, conspired, connived, or agreed, directly or indirectly, with any other Bidder, firm, or person to submit a collusive or sham Bid in connection with the Solicitation and contract for which the attached Bid has been submitted or to refrain from proposing in connection with such Solicitation and contract, or has in any manner, directly or indirectly, sought by agreement or collusion or communication or conference with any other Bidder, firm, or person to fix the price or prices in the attached Bid or any other Bidder, or to fix any overhead, profit, or cost element of the Bid price or the Bid price of any other Bidder, or to secure through any collusion, conspiracy, connivance, or unlawful agreement any advantage against the Village or any person interested in the proposed contract.

d. The price or prices quoted in the attached Bid are fair and proper and are not tainted by any collusion, conspiracy, connivance, or unlawful agreement on the part of the Bidder or any of its agents, representatives, owners, employees, or parties in interest, including this affiant.

_____
Signature

Subscribed and sworn to (or affirmed) before me this _____day of _____20__, by _____, who is personally known to me or who has produced _____as identification.

SEAL

Notary Signature_____ Notary Name: _____
Notary Public (State): _____
My Commission No: _____ Expires on: _____

Village of Palm Springs

PUBLIC SERVICE DEPARTMENT

Submersible Wastewater Pumps, Accessories, and Service
Addendum No. 1
April 12, 2022

BIDS DUE: 2:00 PM, Local Time, April 27, 2022

TO ALL VENDORS BIDDING ON THIS PROJECT:

The changes, additions, substitutions, and/or deletions contained in Addendum No. 1 are hereby made a part of the Bid Documents for the **Submersible Wastewater Pumps, Accessories, and Service**, fully and completely as if the same were fully set forth herein.

A. QUESTIONS FROM BIDDERS

1. **Question:** Can you please confirm that the above referenced solicitation is asking just for the equipment and that no construction/installation services are required?

   Answer: The solicitation is asking for the supply of pumps, accessories and necessary repairs to the provided pumps not construction/installation at Village owned cites.

2. **Question:** Are you accepting equal pump manufacturers?

   Answer: Other pump manufacturers will be reviewed and considered.

3. **Question:** We would like to request that the Village revise the Indemnification clause

   Answer: Village staff will review your request and issue a response in a later addendum if a change occurs.

4. **Question:** Will you be taking a single pump brand based off this Bid Submittal request? Or will all four listed manufacturers be accepted per their proposed bid submittal?

   Answer: The Village's intention is to award to multiple manufacturers.

Addendum No. 1

IN THE SPECIFICATIONS

1. A chart has been added to the Bid Submittal page to include line items.

Receipt acknowledged and conditions agreed to the _____ day of _____, 2022.

_____ _____

Bidder By

END OF ADDENDUM

BID SUBMITTAL SIGNATURE PAGE – ITB # 2022B-010

ITEM	DESCRIPTION	UNIT PRICE
1.	Pumps (% Discount from Current MSRP)	%
2.	Parts and Materials (% Discount from Current M	%
3.	Hourly Rate for Repairs ($/HR)	$

* PLEASE AFFIX SIGNATURE WHERE INDICATED
(FAILURE TO DO SO SHALL RESULT IN THE REJECTION OF YOUR ITB)

By signature on this document, Bidder acknowledges and agrees that its offer includes and accepts all terms, conditions, and specifications of the Village's ITB solicitation as originally published, without exception, change or alteration of any kind, except as may have been published by the Village in official amendments prior to the submission time.

FIRM NAME: **(Enter the entire legal name of the quoting entity)**

DATE:

* **SIGNATURE**: _____

PRINT NAME:

PRINT TITLE:

ADDRESS: _____

CITY / STATE: _____ ZIP CODE: _____

TELEPHONE # ( )

TOLL FREE # ( )

E-MAIL:

FAX #: ( )

APPLICABLE LICENSE(S) NUMBER #_____ TYPE: _____

FEDERAL ID # _____

ITB NO. 2022B-010

SUBMERSIBLE WASTEWATER PUMPS, ACCESSORIES, AND SERVICE

Virtual E-Bid Opening - April 27, 2022

Staff Present:

Paul H. Ward, Public Service Administrator
Kimberly Wynn, Village Clerk
Theresa L. Gonzalez, Procurement Specialist
Andrew Klausner, Project Coordinator
Lazaro Farrey, Utilities Supervisor

Meeting Start: 2:31 p.m.

Meeting End: 2:34 p.m.

Name	Email	Address	Lump Sum
Wastewater Solutions, LLC	matias@wws-llc.com	102 NE 2nd Street Suite 510 Boca Raton, FL 33432	Pump (% discount)- 0% Parts & Materials (% discount)- 0% Hourly Rate for Repairs- $ 0
Hudson Pump & Equipment	lstrickland@tencarva.com	3524 Craftsman Blvd Lakeland, FL 33803	Pump (% discount)- 0% Parts & Materials (% discount)- 0% Hourly Rate for Repairs- $ 115.00
PSI Technologies, Inc	eric@psi-techinc.com	3520 Investment Lane Ste 3 Riviera Beach, FL 33404	Pump (% discount)- 30% Parts & Materials (% discount)- 20% Hourly Rate for Repairs- $ 125.00

Village of Palm Springs

226 Cypress Lane • Palm Springs, Florida 33461-1699
561-965-4010 • www.vpsfl.org

NOTICE OF SOLICITATION
ITB #2022B-010

SUBMERSIBLE WASTEWATER PUMPS, ACCESSORIES, AND SERVICE

ITB SUBMISSION DATE: April 27, 2022, BY 2:00 pm

Sealed Bids for the purchase of submersible wastewater pumps, accessories, and service will be received, by the Village of Palm Springs, at the office of the Palm Springs Village Clerk, 226 Cypress Lane, Palm Springs, Florida 33461 until **2:00 pm** local time on **April 27, 2022,** at which time the bids received will be publicly opened and read. The equipment and/or services required consist of the furnishing of submersible wastewater pumps, related accessories, and services. ***All Bidders are advised to closely examine the Invitation to Bid documents.***

Invitation to Bid documents are available beginning **March 31, 2022**. The Village of Palm Springs utilizes electronic online services for notification, distribution, and submittal of its Solicitation documents. The Village's Solicitation information can be obtained from: (a) Demandstar website – www.Demandstar.com; (b) by contacting the Procurement Specialist, Theresa L. Gonzalez, at procurement@vpsfl.org; (c) or calling the Finance Department at (561) 584-8200 ext. 8447.

Bidders who obtain solicitations from sources other than those named above are cautioned that the Bid package may be incomplete. The Village will not evaluate incomplete bid packages. Demandstar is an independent entity and is not an agent or representative of the Village. Communications to Demandstar do not constitute communications to the Village. The Village is not responsible for errors and omissions occurring in the transmission or downloading of any documents, addenda, plans, or specifications from these websites. In the event of any discrepancy between information on these websites and the Solicitation documents, the terms and conditions of the Solicitation documents will prevail.

Bidders may submit their responses electronically via Demandstar. Bidders also have the option to submit one (1) unbound original and one (1) complete copy of the Bid Document to the Village Clerk at the time and date specified. Sealed Bids must be marked "**ITB #2022B-010, SUBMERSIBLE WASTEWATER PUMPS, ACCESSORIES, AND SERVICE**".

The Village of Palm Springs will provide for public participation through Gotowebinar.com, a communication media technology (teleconference) for the pre-bid conference at **2:00 pm** local time on **April 12, 2022.** The Physical Point of Access is Village Hall at 226 Cypress Lane, Palm Springs, FL 33461. Attendance at the pre-bid conference is **NON-MANDATORY.**

Non-mandatory Pre-Bid Conference – April 12, 2022, at 2:00 pm

Participants can use their telephone or computer mic & speakers (VoIP)

- Registration https://attendee.gotowebinar.com/register/3567482446430855179
  Web ID# 679-391-411
- Phone: United States +1 (562) 247-8321 Web ID# 765-190-577

Bid Opening – April 27, 2022, at 2:30 pm

Participants can use their telephone or computer mic & speakers (VoIP)

- Registration: https://attendee.gotowebinar.com/register/2930861915415003661
  Web ID# 303-198-771
- Phone: United States +1 (631) 992-3221 Web ID# 265-563-916

It is the responsibility of the Bidder to ensure that all pages are included. Therefore, all Bidders are advised to closely examine this package. Any questions regarding the completeness of this package should be immediately directed to the Procurement Specialist.

Bidders are requested to furnish the goods/services as described herein and in accordance with applicable terms, conditions and specifications as set forth herein without any modification, change or alterations to any terms, conditions, or provisions of this solicitation, unless specifically approved in writing by the Village.

No bid may be withdrawn for a period of sixty (60) days after the scheduled closing date for the receipt of bids except as otherwise provided in the Instructions to Bidders and Terms and Conditions.

By submitting an offer which is accepted by the Village, a binding contract is formed in accordance with the terms, conditions and specifications as set forth in this Invitation to Bid (ITB).

The Village of Palm Springs reserves the right to reject any or all bids, to waive technicalities, and to re-advertise. The award, if made, will be made to the most responsive and responsible Bidder whose bid is determined by the Village, in its sole discretion, to be most advantageous.

Bid security shall be furnished in accordance with the Instructions to Bidders. Any questions regarding the specifications and Solicitation process must be submitted in writing to the Procurement Specialist at procurement@vpsfl.org, Questions and requests for clarification and additional information must be received prior to the Deadline for Submission of Questions on **April 20, 2022**, by **5:00 pm** local time.

Pursuant to Section 2-355 of Palm Beach County Ordinance No. 2011-039, and the purchasing policies of the Village of Palm Springs, all Solicitations, once advertised, are under the "Cone of Silence" until the appropriate authority has approved an award recommendation, rejected all responses or some other action by the Village to end the selection process. This limits and requires documentation of communications between potential Bidders and/or Bidders on Village Solicitations, the Village's professional staff, and the Village Council members.

Owner:	Village of Palm Springs
BY:	Theresa L. Gonzalez, Procurement Specialist
DATE:	March 31, 2022
Publication:	Demandstar and Village of Palm Springs website
BY:	Kimberly Wynn, Village Clerk
Publication:	Lake Worth Herald

+ + END OF ADVERTISEMENT FOR BIDS + +

INVITATION TO BID

ITB # 2022B-010	**TITLE: Submersible Wastewater Pumps, Accessories, and Service**
CONTACT PERSON: Theresa L. Gonzalez	**PHONE: (561) 584-8200 Ext. 8447**
E-MAIL: procurement@vpsfl.org	

****** E-MAILED RESPONSES ACCEPTABLE ******

To ensure that your offer is considered, it must be received in the Village of Palm Springs Clerks Office no later than 2:00 P.M., PALM BEACH COUNTY LOCAL TIME, by the submission date. Offers received after this time will not be considered.

This Request for Quotation, General Conditions, Instructions to Bidders, Special Conditions, Specifications, Attachments, Amendments (if issued), and/or any other referenced document form a part of this ITB solicitation and response thereto, and by reference are made a part thereof. The selected awardee/s shall be bound by all terms, conditions and requirements in these documents.

GENERAL CONDITIONS, INSTRUCTIONS, AND INFORMATION FOR BIDDERS
GENERAL CONDITIONS

The following Terms and Conditions are applicable to this purchase order/contract entered into by and between the Village of Palm Springs (referred to as Village) and Bidder.

1. CONE OF SILENCE

Pursuant to Section 2-355 of Palm Beach County Ordinance No. 2011-039, and the purchasing policies of the Village of Palm Springs, all Solicitations, once advertised and until the appropriate authority has approved an award recommendation, are under the "Cone of Silence". This limits and requires documentation of communications between potential Bidders and/or Bidders on Village Solicitations, the Village's professional staff, and the Village Council members.

2. ADDENDA

The Village may issue an addendum in response to any inquiry received, prior to the close of the Solicitation period, which changes, adds, or clarifies the terms, provisions, or requirements of the Solicitation. The Bidder should not rely on any representation, statement, or explanation, whether written or verbal, other than those made in the Solicitation document or in the addenda issued. Where there appears to be a conflict between the Solicitation and any addenda, the last addendum issued shall prevail. It is the vendor's responsibility to ensure receipt of all addenda, and any accompanying documentation. The vendor is required to submit with its Bid or Bid a signed "Acknowledgment of Addenda" form, when any addenda have been issued.

3. LEGAL REQUIREMENTS

This Solicitation is subject to all legal requirements contained in the applicable Village Ordinances and Resolutions, as well as all applicable Village, State, and Federal Statutes. Where conflict exists between this Bid Solicitation and these legal requirements, the authority shall prevail in the following order: Federal, State, and local.

4. CHANGE OF BID

Prior to the scheduled Bid opening a Bidder may change its Bid by submitting a new Bid (as indicated on the cover page) with a letter on the firm's letterhead, signed by an authorized agent stating that the new submittal replaces the original submittal. The new submittal shall contain the letter and all information as required for submitting the original Bid. No changes to a Bid will be accepted after the Bid has been opened.

5. WITHDRAWAL OF BID

A Bid shall be irrevocable unless the Bid is withdrawn as provided herein. Only a written letter received by the Procurement Specialist prior to the Bid opening date may withdraw a Bid. The withdrawal letter must be on company letterhead and signed by an authorized agent of the Bidder.

6. CONFLICTS WITHIN THE BID SOLICITATION

Where there appears to be a conflict between the General Terms and Conditions, Special Conditions, the Technical Specifications, the Bid Submittal Form, or any addendum issued, the order of precedence shall be: the last addendum issued, the Bid Submittal Form, the Technical Specifications, the Special Conditions, and then the General Terms and Conditions.

7. PAYMENT TERMS

It is the policy of the Village of Palm Springs that payment for all purchases by Village departments shall be made in a timely manner. The Village will pay the awarded Bidder upon receipt and acceptance of the goods or services by a duly authorized representative of the Village. In accordance with Section 218.74, Florida Statutes, the time at which payment shall be due from the Village shall be forty-five (45) days from receipt of a proper invoice. Proceedings to resolve disputes for payment of obligations shall be concluded by final written decision of the Village Manager or designee, not later than sixty (60) days after the date on which the proper invoice was received by the Village.

8. DISCOUNTS (PROMPT PAYMENTS)

The Bidder may offer cash discounts for prompt payments; however, such discounts will not be considered in determining the lowest price during Bid evaluation. Bidders are requested to provide prompt payment terms in the space provided on the Bid submittal signature page of the Solicitation.

9. PREPARATION OF BIDS

a. The Bid forms define requirements of items to be purchased and must be completed and submitted with the Bid. Use of any other forms will result in the rejection of the Bidder's offer. The Bid submittal forms must be legible. Bidders shall use typewriter, computer, or ink. All changes must be crossed out and initialed in ink. Failure to comply with these requirements may cause the Bid to be rejected.
b. An authorized agent of the Bidder's firm must sign the Bid submittal form. Failure to sign the Signature Page of the Bid shall render the Bid non-responsive.
c. The Bidder may be considered non-responsive if Bids are conditioned upon modifications, changes, or revisions to the terms and conditions of this Solicitation.
d. The Bidder may submit alternate Bid(s) for the same Solicitation provided that such offer is allowable under the terms and conditions. The alternate Bid must meet or exceed the minimum requirements and be submitted as a separate Bid submittal marked "Alternate Bid".
e. When there is a discrepancy between the unit prices and any extended prices, the unit prices will prevail.
f. Late Bids will not be accepted and will be returned to the sender unopened. It is the Bidder's responsibility to ensure timely delivery by the due date and time, and at the place stated in this Solicitation. No exceptions will be made due to weather, carrier, traffic, illness, or other issues.

10. CANCELLATION OF BID SOLICITATION

The Village of Palm Springs reserves the right to cancel, in whole or in part, any Invitation to Bid when it is in the best interest of the Village

deems necessary

11. AWARD OF CONTRACT

a. The contract may be awarded to the responsive and responsible Bidder meeting all requirements as set forth in the Solicitation. The Village reserves the right to reject any and all Bids, to waive irregularities or technicalities, and to re-advertise for all or any part of this Bid Solicitation as deemed in its best interest. The Village shall be the sole judge of its best interest.
b. The Village reserves the right to reject any and all Bids if it is determined that prices are excessive, best offers are determined to be unreasonable, or it is otherwise determined to be in the Village's best interest to do so.
c. The Village reserves the right to negotiate prices with the responsive and responsible low Bidder, provided that the scope of work of this Solicitation remains the same.
d. The Bidder's performance as a prime contractor or subcontractor on previous Village contracts shall be taken into account in evaluating the Bid received for this Bid Solicitation.
e. The Bid Solicitation, any addenda and/or properly executed modifications, the signed Agreement, the purchase order, and any change order(s) shall constitute the contract.
f. Award of this Bid may be predicated on compliance with, and submittal of all required documents as stipulated in the Bid Solicitation.
g. The Village reserves the right to request and evaluate additional information from any Bidder after the submission deadline as the Village deems necessary.

12. CONTRACT EXTENSION

The Village Manager reserves the right to automatically extend any agreement for a maximum period not to exceed ninety (90) calendar days in order to provide Village departments with continual service and supplies while a new agreement is being solicited, evaluated, and/or awarded.

13. WARRANTY

All warranties express and implied shall be made available to the Village for goods and services covered by this Bid Solicitation. All goods furnished shall be fully guaranteed by the awarded Bidder against factory defects and workmanship. At no expense to the Village, the awarded Bidder shall correct any and all apparent and latent defects that may occur within the manufacturer's standard warranty.

14. ESTIMATED QUANTITIES

Estimated quantities or dollars are for Bidder's guidance only: (a) estimates are based on the Village's anticipated needs and/or usage; and (b) the Village may use these estimates to determine the low Bidder. No guarantee is expressed or implied as to quantities or dollars that will be used during the contract period. The Village is not obligated to place any order for the given amount subsequent to the award of this Bid Solicitation.

15. NON-EXCLUSIVITY

It is the intent of the Village to enter into an agreement with the awarded Bidder that will satisfy its needs as described herein. However, the Village reserves the right as deemed in its best interest to perform, or cause to be performed, the work and services, or any portion thereof, herein described in any manner it sees fit, including but not limited to, award of other contracts, use of any contractor, or perform the work with its own employees.

16. CONTINUATION OF WORK

Any work that commences prior to and will extend beyond the expiration date of the current contract period shall, unless terminated by mutual written agreement between the Village and the successful Bidder, continue until completion at the same prices, terms, and conditions.

17. BID PROTEST

Shall be in accordance with Section 58-6 of the Village Code.

18. LICENSES, PERMITS AND FEES

The awarded Bidder(s) shall hold and maintain at its own expense all licenses and/or certifications, obtain and pay for all permits and/or inspections, and comply with all laws, ordinances, regulations, and building code requirements applicable to the work required herein. Damages, penalties, and/or fines imposed on the Village or an awarded Bidder for failure to obtain and maintain required licenses, certifications, permits, and/or inspections shall be borne by the awarded Bidder.

19. SUBCONTRACTING

Unless otherwise specified in this Bid Solicitation, the successful Bidder shall not subcontract any portion of the work without the prior written consent of the Village. The ability to subcontract may be further limited by the Special Conditions. Subcontracting without the prior consent of the Village may result in termination of the contract for default.

20. ASSIGNMENTS

The awarded Bidder shall not assign, transfer, hypothecate, or otherwise dispose of this contract, including any rights, title, or interest therein, or its power to execute such contract to any person, company, or corporation without the prior written consent of the Village. Assignment without the prior consent of the Village may result in termination of the contract for default.

21. SHIPPING TERMS

Unless otherwise specified in the Bid Solicitation, prices quoted shall be F.O.B. Destination. Freight shall be included in the proposed price.

22. RESPONSIBILITIES AS EMPLOYER

The employee(s) of the awarded Bidder shall be considered to be at all times its employee(s), and not an employee(s) or agent(s) of the Village or any of its departments. The awarded Bidder shall provide physically competent employee(s) capable of performing the work as required. The Village may require the awarded bidder to remove any employee it deems unacceptable. All employees of the awarded bidder shall wear proper identification.

It is the awarded bidder's responsibility to ensure that all its employees and subcontractors comply with the employment regulations required by the US Department of Homeland Security. The Village shall have no responsibility to check or verify the legal immigration status of any employee of the awarded Bidder.

23. INDEMNIFICATION

The awarded Bidder shall indemnify and hold harmless the Village and its officers, employees, agents, and instrumentalities from any and all liability, losses or damages, including attorney's fees and costs of defense, which the Village or its officers, employees, agents, or instrumentalities may incur as a result of claims, demands, suits, causes of actions, or proceedings of any kind or nature arising out of, relating to, or resulting from the performance of the agreement by the awarded Bidder or its employees, agents, servants, partners, principals, or subcontractors. The awarded Bidder shall pay all claims and losses in connection therewith, and shall investigate and defend all claims, suits, or actions of any kind or nature in the name of the Village, where applicable, including appellate proceedings, and shall pay all costs, judgments, and attorney's fees which may be incurred thereon. The awarded Bidder expressly understands and agrees that any insurance protection required by this contract agreement or otherwise provided by the awarded Bidder shall in no way limit the responsibility to indemnify, keep and save harmless, and defend the Village or its officers, employees, agents, and instrumentalities as herein provided.

24. COLLUSION

A Bidder recommended for award as the result of a competitive Solicitation for any Village purchases of supplies, materials, and services (including professional services, other than professional architectural, engineering, and other services subject to Sec. 287.055 Florida Stats.), purchase, lease, permit, concession, or management agreement shall, within five (5) business days of the filing of such recommendation, submit an affidavit under the penalty of perjury, on a form provided by the Village, stating either that the contractor is not related to any of the other parties Bidding in the competitive Solicitation or identifying all related parties, as defined in this Section, which Bid in the Solicitation; and attesting that the contractor's Bid is genuine and not a sham or collusive or made in the interest or on behalf of any person not therein named, and that the contractor has not, directly or indirectly, induced or solicited any other Bidder to put in a sham Bid, or any other person, firm, or corporation to refrain from proposing, and that the Bidder has not in any manner sought by collusion to secure to the Bidder an advantage over any other Bidder. In the event a recommended Bidder identifies related parties in the competitive Solicitation its Bid shall be presumed to be collusive and the recommended Bidder shall be ineligible for award unless that presumption is rebutted to the satisfaction of the Village. Any person or entity that fails to submit the required affidavit shall be ineligible for contract award.

25. MODIFICATION OF CONTRACT

The contract may be modified by mutual consent, in writing, through the issuance of a modification to the contract, a supplemental agreement, purchase order, or change order, as appropriate.

26. TERMINATION FOR CONVENIENCE

The Village, at its sole discretion, reserves the right to terminate any contract entered into pursuant to this Invitation to Bid (ITB) with or without cause immediately upon providing written notice to the awarded Bidder. Upon receipt of such notice, the awarded Bidder shall not incur any additional costs under the contract. The Village shall be liable only for reasonable costs incurred by the awarded Bidder prior to the date of the notice of termination. The Village shall be the sole judge of "reasonable costs."

27. TERMINATION FOR DEFAULT

The Village reserves the right to terminate this contract, in part or in whole, or place the vendor on probation in the event the awarded Bidder fails to perform in accordance with the terms and conditions stated herein by providing written notice of such failure or default and by specifying a reasonable time period within which the awarded Bidder must cure any such failure to perform or default. If the awarded Bidder fails to cure the default within the time specified, the Village may then terminate the subject contract by providing written notice to the awarded Bidder. The Village further reserves the right to suspend or debar the awarded Bidder in accordance with the appropriate Village ordinances, resolutions, and/or policies. The vendor will be notified by letter of the Village's intent to terminate. In the event of termination for default, the Village may procure the required goods and/or services from any source and use any method deemed in its best interest. All re-procurement costs shall be borne by the incumbent Bidder.

28. FRAUD AND MISREPRESENTATION

Any individual, corporation, or other entity that attempts to meet its contractual obligations with the Village through fraud, misrepresentation, or material misstatement, may be debarred as set forth by the Village Code. The Village, as a further sanction, may terminate or cancel any other contracts with such individual, corporation, or entity. Such individual or entity shall be responsible for all direct or indirect costs associated with termination or cancellation, including attorney's fees.

29. ACCESS AND AUDIT OF RECORDS

The Village reserves the right to require the awarded Bidder to submit to an audit by an auditor of the Village's choosing at the awarded Bidder's expense. The awarded Bidder shall provide access to all of its records, which relate directly or indirectly to this Agreement, at its place of business during regular business hours. The awarded Bidder shall retain all records pertaining to this Agreement, and upon request, make them available to the Village for three (3) years following expiration of the Agreement. The awarded Bidder agrees to provide such assistance as may be necessary to facilitate the review or audit by the Village to ensure compliance with applicable accounting and financial standards.

30. OFFICE OF THE INSPECTOR GENERAL

Palm Beach County has established the Office of the Inspector General, which is authorized and empowered to review past, present, and proposed County programs, contracts, transactions, accounts and records. The Inspector General (IG) has the power to subpoena witnesses, administer oaths, require the production of records, and monitor existing projects and programs. The Inspector General may, on a random basis, perform audits on all Village contracts.

31. PRE-AWARD INSPECTION

The Village may conduct a pre-award inspection of the Bidder's site or hold a pre-award qualification hearing to determine if the Bidder is capable of performing the requirements of this Bid Solicitation.

32. PROPRIETARY AND/OR CONFIDENTIAL INFORMATION

Bidders are hereby notified that all information submitted as part of, or in support of Bid submittals will be available for public inspection after the opening of Bids in compliance with Chapter 119 of the Florida Statutes, popularly known as the "Public Records Law." The Bidder shall not submit any information in response to this Solicitation which the Bidder considers to be a trade secret, proprietary, or confidential. The submission of any information to the Village in connection with this Solicitation shall be deemed conclusively to be a waiver of any trade secret or other protection which would otherwise be available to the Bidder. In the event that the Bidder submits information to the Village in violation of this restriction, either inadvertently or intentionally, and clearly identifies that information in the Bid as protected or confidential, the Village may, in its sole discretion, either (a) communicate with the Bidder in writing in an effort to obtain the Bidder's withdrawal of the confidentiality restriction, or (b) endeavor to redact and return that information to the Bidder as quickly as possible, and if appropriate, evaluate the balance of the Bid. The redaction or return of information pursuant to this clause may render a Bid non-responsive.

33. HEALTH INSURANCE PORTABILITY AND ACCOUNTABILITY ACT (HIPAA)

Any person or entity that performs or assists the Village of Palm Springs with a function or activity involving the use or disclosure of "individually identifiable health information (IIHI) and/or Protected Health Information (PHI) shall comply with the Health Insurance Portability and Accountability Act (HIPAA) of 1996. HIPAA mandates for privacy, security, and electronic transfer standards include, but are not limited to:

a. Use of information only for performing services required by the contract or as required by law;
b. Use of appropriate safeguards to prevent non- permitted disclosures;
c. Reporting to the Village of Palm Springs any non- permitted use or disclosure;
d. Assurances that any agents and subcontractors agree to the same restrictions and conditions that apply to the Bidder and reasonable assurances that IIHI/PHI will be held confidential;
e. Making Protected Health Information (PHI) available to the customer;
f. Making PHI available to the customer for review and amendment, and incorporating any amendments requested by the customer;
g. Making PHI available to the Village of Palm Springs for an accounting of disclosures; and
h. Making internal practices, books, and records related to PHI available to the Village of Palm Springs for compliance audits. PHI shall maintain its protected status regardless of the form and method of transmission (paper records and/or electronic transfer of data). The Bidder must give its customers written notice of its privacy information practices, including specifically, a description of the types of uses and disclosures that would be made with protected health information.

34. ADDITIONAL FEES AND SURCHARGES

Unless provided for in the contract/agreement, the Village will not make any additional payments such as fuel surcharges, demurrage fees, or delay-in-delivery charges.

35. COMPLIANCE WITH FEDERAL STANDARDS

All items to be purchased under this contract shall be in accordance with all governmental standards, to include, but not be limited to, those issued by the Occupational Safety and Health Administration (OSHA), the National Institute of Occupational Safety Hazards (NIOSH), and the National Fire Protection Association (NFPA).

36. COMPLIANCE WITH FEDERAL REGULATIONS DUE TO USE OF FEDERAL FUNDING

If the goods or services to be acquired under this Solicitation are to be purchased, in part or in whole, with Federal funding, it is hereby agreed and understood that Section 60-250.4, Section 60-250.5, and Section 60-741.4 of Title 41 of the United States Code, which addresses Affirmative Action requirements for disabled workers, is incorporated into this Solicitation and resultant contract by reference.

37. BINDING EFFECT

All of the terms and provisions of this contract/agreement, whether so expressed or not, shall be binding upon, inure to the benefit of, and be enforceable by the parties and their respective legal representatives, successors, and permitted assigns.

38. SEVERABILITY

The Village's obligation pursuant to any contract or agreement entered into in accordance with this Solicitation is specifically contingent upon the lawful appropriation of funds. Failure to lawfully appropriate funds for any contract or agreement awarded shall result in automatic termination of the contract or agreement. A non-appropriation event shall not constitute a default or breach of said contract or agreement by the Village.

39. NO THIRD-PARTY BENEFICIARY

No provision of this Contract is intended to, or shall be construed to, create any third-party beneficiary or to provide any rights to any person or entity not a party to this Contract, including but not limited to any citizen or employees of the Village and/or successful vendor.

40. GOVERNING LAW AND VENUE

This contract and all transactions contemplated by this agreement shall be governed by and construed and enforced in accordance with the laws of the State of Florida without regard to any contrary conflicts of law principle. Venue of all proceedings in connection herewith shall lie exclusively in Palm Beach County, Florida, and each party hereby waives whatever its respective rights may have been in the selection of venue.

41. ATTORNEY'S FEES

It is hereby understood and agreed that in the event any lawsuit in the judicial system, federal or state, is brought to enforce compliance with this contract or interpret same, or if any administrative proceeding is brought for the same purposes, each party shall pay their own attorney's fees and costs, including appellate fees and costs.

42. EQUAL OPPORTUNITY AND ANTI-DISCRIMINATION

The Village of Palm Springs complies with all laws prohibiting discrimination on the basis of age, race, gender, religion, creed, political affiliation, sexual orientation, physical or mental disability, color or national origin, and therefore is committed to assuring equal opportunity in the award of contracts and encourages small, local, minority, and female- owned businesses to participate.

During the performance of this contract, the awarded Bidder agrees it will not discriminate or permit discrimination in its hiring practices or in its performance of the contract. The awarded Bidder shall strictly adhere to the equal employment opportunity requirements and any applicable requirements established by the State of Florida, Palm Beach County and the federal government.

The awarded Bidder further acknowledges and agrees to provide the Village with all information and documentation that may be requested by the Village from time to time regarding the Solicitation, selection, treatment and payment of subcontractors, suppliers, and vendors in connection with this Contract.

43. AVAILABILITY OF CONTRACT TO OTHER VILLAGE DEPARTMENTS

It is agreed and understood that any Village department or agency may access this contract and purchase the goods or services awarded herein. Each Village department will issue a separate purchase order to the awarded Bidder for the department's specific purchases.

44. CRIMINAL HISTORY BACKGROUND CHECKS

Prior to hiring a contract employee or contracting with a Bidder, the Village may conduct a comprehensive criminal background check by accessing any Federal, State, or local law enforcement database available. The contract employee or Bidder will be required to sign an authorization for the Village to access criminal background information. The costs for the background checks shall be borne by the Village.

45. LABOR, MATERIALS, AND EQUIPMENT

Unless specified elsewhere in the Solicitation or resultant contract, all labor, materials, and equipment required for the performance of the requirements of the Contract shall be supplied by the awarded Bidder.

46. MINIMUM WAGE REQUIREMENTS

The awarded Bidder shall comply with all minimum wage and living wage requirements, such as Living Wage requirements, minimum wages based on Federal Law, minimum wages based on the Davis-Bacon Act, and the provisions of any other wages laws, as may be applicable to this Contract.

47. PACKING SLIP AND DELIVERY TICKET

A packing slip and/or delivery ticket shall accompany all items during delivery to the Village. The documents shall include information on the contract number or purchase order, any back-order items, and the number or quantity of items being delivered.

48. PURCHASE OF OTHER ITEMS

The Village reserves the right to purchase other related goods or services, not listed in the Solicitation, during the contract term. When such requirements are identified, the Village may request price quote(s) from the awarded Bidder(s) on the contract. The Village, at its sole discretion, will determine if the prices offered are reasonable, and may choose to purchase the goods or services from the awarded Bidder, another contract vendor, or a non-contract vendor.

49. PUBLIC RECORDS

Florida law provides that municipal records shall at all times be available to the public for inspection. Chapter 119, Florida Statutes, the Public Records Law, requires that all material submitted in connection with a Bid response shall be deemed to be a public record subject to public inspection upon award, recommendation for award, or thirty (30) days after Bid opening, whichever occurs first. Certain exemptions to public disclosure are statutorily provided for in Section 119.07, Florida Statutes. If the Bidder believes any of the information contained in his/her/its Bid is considered confidential and/or proprietary, inclusive of trade secrets as defined in Section 812.081, Florida Statutes, and is exempt from the Public Records Law, then the Bidder, must in its response, specifically identify the material which is deemed to be exempt and state the legal authority for the exemption. All materials that qualify for exemption from Chapter 119, Florida Statutes or other applicable law must be submitted in a separate envelope, clearly identified as "EXEMPT FROM PUBLIC DISCLOSURE" with the firm's name and the Bid number clearly marked on the outside. The Village will not accept Bids when the entire Bid is labeled as exempt from disclosure. The Village's determination of whether an exemption applies shall be final, and the Bidder agrees to defend, indemnify, and hold harmless the Village and the Village's officers, employees, and agents, against any loss or damages incurred by any person or entity as a result of the Village's treatment of records as public records.

The awarded Bidder(s) shall keep and maintain public records and fully comply with the requirements set forth at Section 119.0701, Florida Statues, as applicable; failure to do so shall constitute a material breach of any and all agreements awarded pursuant to this Solicitation.

50. CONFLICTS OF INTEREST

All Bidders must disclose with their Bid the name of any officer, director, or agent who is also an employee of the Village of Palm Springs. Further, all Bidders must disclose the name of any Village employee who has any interest, financial or otherwise, direct or indirect, of five percent (5%) or more in the Bidders' firm or any of its branches. Failure to disclose any such affiliation will result in disqualification of the Bidder from this Invitation to Bid and may be grounds for further disqualification from participating in any future Bids with the Village.

51. PUBLIC ENTITY CRIMES

As provided in Section 287.133(2) (a), Florida Statutes, a person or affiliate who has been placed on the convicted vendors list following a conviction for a public entity crime may not submit a Bid on a contract to provide any goods or services to a public entity; may not submit a Bid on a contract with a public entity for the construction or repair of a public building or public work; may not submit Bids on leases of real property to a public entity; may not be awarded or perform work as a contractor, supplier, subcontractor, or consultant under a contract with any public entity.

52. OTHER GOVERNMENTAL AGENCIES

If a Bidder is awarded a contract as a result of this ITB, the Bidder shall allow other governmental agencies to access this contract and purchase the goods and services under the terms and conditions at the prices awarded, as applicable.

53. COMPLETION OF WORK AND DELIVERY

All work shall be performed, and all deliveries made in accordance with good commercial practice. The work schedule and completion dates shall be adhered to by the awarded Bidder(s), except in such cases where the completion date will be delayed due to acts of nature, force majeure, strikes, or other causes beyond the control of the awarded Bidder. In these cases, the awarded Bidder shall notify the Village of the delays in advance of the original completion so that a revised delivery schedule can be appropriately considered by the Village.

54. FAILURE TO DELIVER OR COMPLETE WORK

Should the awarded Bidder(s) fail to deliver or complete the work within the time stated in the contract, it is hereby agreed and understood that the Village reserves the authority to cancel the contract with the awarded Bidder and secure the services of another vendor to purchase the items or complete the work. If the Village exercises this authority, the Village shall be responsible for reimbursing the awarded Bidder for work that was completed, and items delivered and accepted by the Village in accordance with the contract specifications. The Village may, at its option, demand payment from the awarded Bidder, through an invoice or credit memo, for any additional costs over and beyond the original contract price which were incurred by the Village as a result of having to secure the services of another vendor.

55. CORRECTING DEFECTS

The awarded Bidder shall be responsible for promptly correcting any deficiency, at no cost to the Village, within three (3) calendar days after the Village notifies the awarded Bidder of such deficiency in writing. If the awarded Bidder fails to correct the defect the Village may (a) place the awarded Bidder in default of its contract; and/or (b) procure the products or services from another source and charge the awarded Bidder for any additional costs that are incurred by the Village for this work or items, either through a credit memorandum or through invoicing.

56. ACCIDENT PREVENTION AND BARRICADES

Precautions shall be exercised at all times for the protection of persons and property. All awarded Bidder performing services or delivering goods under this contract shall conform to all relevant OSHA, State, and County regulations during the course of such effort. Any fines levied by the above-mentioned authorities for failure to comply with these requirements shall be borne solely by the awarded Bidder. Barricades shall be provided by the awarded Bidder when work is performed in areas traversed by persons, or when deemed necessary by the Village.

57. OMISSIONS IN SPECIFICATIONS

The specifications and/or statement of work contained within this Solicitation describe the various functions and classes of work required as necessary for the completion of the project. Any omissions of inherent technical functions or classes of work within the specifications and/or statement of work shall not relieve the Bidder from furnishing, installing, or performing such work where required to the satisfactory completion of the project.

58. MATERIALS SHALL BE NEW AND WARRANTED AGAINST DEFECTS

The awarded Bidder hereby acknowledges and agrees that all materials, except where recycled content is specifically requested, supplied by the awarded Bidder in conjunction with this Solicitation and resultant contract shall be new, warranted for their merchantability, and fit for a particular purpose. In the event any of the materials supplied to the Village by the awarded Bidder are found to be defective or do not conform to specifications, (1) the materials may be returned to the awarded Bidder at the Bidder's expense and the contract cancelled; or (2) the Village may require the awarded Bidder to replace the materials at the Bidder's expense.

59. TOXIC SUBSTANCES/FEDERAL "RIGHT TO KNOW" REGULATIONS

The Federal "Right to Know" Regulation implemented by the Occupational Safety and Health Administration (OSHA) requires employers to inform their employees of any toxic substances to which they may be exposed in the workplace, and to provide training in safe handling practices and emergency procedures. It also requires notification to local fire departments of the location and characteristics of all toxic substances regularly present in the workplace.

Accordingly, the awarded Bidder(s) performing under this contract are required to provide two (2) complete sets of Material Safety Data Sheets to each Village department utilizing the any awarded products that are subject to these regulations. This information should be provided at the time when the initial delivery is made, on a department-by- department basis.

60. TAXES

The Village of Palm Springs is exempt from Federal and State taxes for tangible personal property.

61. BIDDER'S COSTS

The Village shall not be liable for any costs incurred by Bidders in responding to this Invitation to Bid (ITB).

62. SUBSTITUTION OF PERSONNEL

It is the intention of the Village that the awarded Bidder's personnel proposed for the contract shall be available for the initial contract term. In the event the awarded Bidder wishes to substitute personnel, the awarded Bidder shall propose personnel of equal or higher qualifications, and all replacement personnel are subject to the Village's approval. In the event the substitute personnel are not satisfactory to the Village, and the matter cannot be resolved to the satisfaction of the Village, the Village reserves the right to cancel the contract for cause.

63. FORCE MAJEURE

The Village and the awarded Bidder are excused from the performance of their respective obligations under the contract when and to the extent that their performance is delayed or prevented by any circumstances beyond their control, including fire, flood, explosion, strikes or other labor disputes, natural disasters, public emergency, war, riot, civil commotion, malicious damage, act or omission of any governmental authority, delay or failure or shortage of any type of transportation, equipment, or service from a public utility needed for their performance provided that:

a. The non-performing party gives the other party prompt written notice describing the particulars of the force majeure, including, but not limited to, the nature of the occurrence and its expected duration, and continues to furnish timely reports with respect thereto during the period of the force majeure.
b. The excuse of performance is of no greater scope and of no longer duration than is required by the force majeure.
c. No obligations of either party that arose before the force majeure causing the excuse of performance are excused as a result of the force majeure.
d. The non-performing party uses its best efforts to remedy its inability to perform. Notwithstanding the above, performance shall not be excused under this section for a period in excess of two (2) months, provided that in extenuating circumstances, the Village may excuse performance for a longer term. Economic hardship of the awarded Bidder shall not constitute a force majeure. The term of the contract shall be extended by a period equal to that during which either party's performance is suspended under this section

64. NOTICES

Notices shall be effective when received at the addresses specified in the contract/agreement. Changes in respective addresses to which such notices are to be directed may be made from time to time by either party by written notice to the other party. Facsimile and email transmissions are acceptable notice effective when received; however, facsimile and email transmissions received after 4:30 p.m. or on weekends or holidays will be deemed received on the next business day. The original of the notice must also be mailed to the receiving party.

Nothing contained in this section shall be construed to restrict the transmission of routine communications between representatives of the successful Bidder and the Village of Palm Springs.

65. POOL CONTRACTS

During the term of contracts and agreements that are executed as vendor pools, awarding vendors in prequalified pools of vendors, either as a general pool or by categories, sub-categories, or groups, the Village reserves the right to add new vendors to these contracts for goods or services not awarded for the original Solicitation or as part of the general pool category, sub-category or group. To be eligible to be added to these pool contracts, a vendor must meet the same eligibility requirements established in the original Invitation to Bid ().

66. FISCAL FUNDING OUT

The Village's obligation pursuant to any contract or agreement entered into in accordance with this Solicitation is specifically contingent upon the lawful appropriation of funds. Failure to lawfully appropriate funds for any contract or agreement awarded shall result in automatic termination of the contract or agreement.

67. PURCHASE ORDER

The Village will not accept any goods delivered or services performed unless a duly authorized purchase order has been issued for said goods and/or services. The purchase order number must appear on all invoices, packing slips and all correspondence concerning the order.

68. DELIVERIES

Deliveries are to be made Monday through Friday, excluding Village holidays, unless otherwise stipulated.

69. SALES PROMOTIONS / PRICE REDUCTIONS

Should sales promotions occur during the term of the order/contract that lower the price of the procured item, the successful vendor shall extend to the Village the lower price offered by the manufacturer on any such promotional item. Further, any price decreases effectuated during the order/contract period by reason of market change or otherwise, shall be passed on to the Village. Additionally, any time after award, the vendor may offer a reduced price which shall remain in effect for the duration of the order/contract.

70. E-VERIFY

Pursuant to Section 448.095(2), Florida Statutes, effective January 1, 2021, Vendor shall:

(a) Register with and use the E-Verify system to verify the work authorization status of all newly hired employees and require all subcontractors (providing services or receiving funding under this Agreement) to register with and use the E-Verify system to verify the work authorization status of all the subcontractors' newly hired employees.

(b) Secure an affidavit from all subcontractors (providing services or receiving funding under this Agreement) stating that the subcontractor does not employ, contract with, or subcontract with an unauthorized alien.

(c) Maintain copies of all subcontractor affidavits for the duration of this Agreement.

(d) Comply fully, and ensure all its subcontractors comply fully, with Section 448.095, Florida Statutes.

(e) Be aware that a violation of Section 448.09, Florida Statutes (Unauthorized aliens; employment prohibited) shall be grounds for termination of this Agreement; and

(f) Be aware that if the Village terminates this Agreement under Section 448.095(2)(c), Florida Statutes Vendor may not be awarded a public contract for at least 1 year after the date on which the Agreement is terminated and will be liable for any additional costs incurred by the Village as a result of the termination of the Agreement.

SPECIAL CONDITIONS

71. PURPOSE

The purpose of this Solicitation is to obtain bids from contractors to provide the Village with Submersible Wastewater Pumps, in accordance with the terms, conditions, and specifications contained in this Invitation to Bid.

72. TERM OF CONTRACT

The Contract shall commence upon the date of the duly executed Agreement and shall remain in effect for a term of three (3) year(s).

73. OPTIONS TO RENEW

Upon mutual agreement of the Village Manager and the successful Bidder, the Agreement may be renewed for up to an additional two (2) year(s).

74. METHOD OF AWARD: LOWEST PRICE

If the Bidder is awarded a contract under this Solicitation, the prices offered by the Bidder shall remain fixed and firm during the performance of the Work.

75. PRICES SHALL BE FIXED AND FIRM

If the Bidder is awarded a contract under this Solicitation, the prices offered by the Bidder shall remain fixed and firm during the performance of the Work.

76. PRICE ADJUSTMENTS

Prior to, or upon completion, of the first year of the Contract term, and every 12-month anniversary thereafter, the Village may consider an adjustment to prices based on the following:

The actual amount of increase in awarded Bidder's costs from the manufacturer or its supplier.

It is the awarded Bidder's responsibility to request any pricing adjustment under this provision. For any adjustment to commence, the awarded Bidder's request for adjustment should be submitted at least sixty (60) days prior to the anniversary date. The adjustment requested shall not be in excess of the relevant pricing increase. All requests must include documentation of the increase in price to awarded Bidder. If a timely adjustment request is not received from the awarded Bidder, the Village may exercise its Option to Renew the Contract for another Term without any pricing adjustment.

77. EQUAL PRODUCTS

Only the referenced manufacturers will be considered unless noted otherwise in the technical specifications.

78. INSURANCE

The awarded Bidder shall not commence any performance pursuant to the terms of this Solicitation until certification or proof of insurance has been received by the Finance Department and approved.

The required insurance coverage is to be issued by an insurance company authorized and licensed to do business in the State of Florida, with the minimum rating of A- VIII or better, in accordance with the latest edition of A.M. Best's Insurance Guide. This insurance shall be documented in certificates of insurance which provides that the Village of Palm Springs shall be notified at least thirty (30) days in advance of cancellation, non-renewal, or adverse change. The receipt of certificates or other documentation of insurance or policies or copies of policies by the Village or by any of its representatives, which indicate less coverage than is required, does not constitute a waiver of the awarded Bidder's obligation to fulfill the insurance requirements herein. Deductibles must be acceptable to the Village of Palm Springs.

The awarded Bidder must submit a current Certificate of Insurance, naming the Village of Palm Springs as an additional insured and list as such on the insurance certificate. New certificates of insurance are to be provided to the Village upon expiration.
The awarded Bidder shall provide insurance coverage as follows, and shall carry:

a. Workers' Compensation Insurance – as required by law.
b. Employer's Liability Insurance - $100,000 per occurrence, $100,000 for each disease, and $500,000 for aggregate disease
c. Comprehensive General Liability Insurance – with limits of not less than $1,000,000 per occurrence and $2,000,000 in the aggregate for Bodily Injury and Property Damage.
d. Automobile Liability Insurance - for owned, non-owned and hired vehicles – with a limit of not less than $1,000,000 per occurrence, combined single limit for Bodily Injury Liability and Property Damage Liability.

If no deductible for insurance is referenced above, the Village reserves the right to require such deductibles which shall be determined by the Finance Department, but not less than
$25,000 per claim.

The Comprehensive General Liability insurance policy must include coverage that is not more restrictive than the latest edition of the Comprehensive General Liability Policy, without restrictive endorsements, as filed by the Insurance Services Offices, and the policy must include coverage's for

premises and/or operations, independent contractors, products and/or completed operations for contracts, contractual liability, broad form contractual coverage, broad form property damage, products, completed operations, and personal injury. Personal injury coverage shall include coverage that has the Employee and Contractual Exclusions removed.

79. CERTIFICATIONS

Any Bidder that submits an offer in response to this Solicitation shall, at the time of such offer, hold all necessary certifications issued by the State or County Examining Board qualifying the Bidder to perform the work proposed for this project. If other professions or trades are required in conjunction with this Solicitation and such work/services will be performed or provided by a subcontractor(s), an applicable Certificate of Competency issued to the subcontractor(s) shall be submitted with the Bidder's offer; provided, however, that the Village may at its option and in its best interest allow the Bidder to supply the subcontractor(s) certificate to the Village during the evaluation period.

All architects or engineers on this project must possess current Florida professional registrations or licenses for the architectural and engineering services which they intend to provide.

80. METHOD OF PAYMENT: INVOICE FOR COMPLETED WORK

The awarded Bidder shall submit an invoice to the Village for progress payments for work that has been completed, and has been inspected and accepted by the Village. The date of the invoices shall not exceed thirty (30) calendar days from the completion of that portion of the work. Under no circumstances shall the invoice be submitted to the Village in advance of the completion and acceptance of the work.

The invoice shall contain the following basic information: the awarded Bidder's name and address, invoice number, date of invoice, description of the goods or service, the contract number, purchase order number, and any discounts.

The Village prides itself on paying its vendors promptly and efficiently, and as such requires that vendors accept payment via wire transfer, ACH (direct deposit), or an appropriate electronic payment method. All payments shall be made in accordance with the Florida Prompt Payment Act, Section 218.74, Florida Statutes, upon presentation of a proper invoice by the awarded Bidder.

81. WARRANTY REQUIREMENTS

In addition to all other warranties that may be supplied by the Bidder or required in the technical specifications, the awarded Bidder shall warrant its products and/or service against faulty labor and/or defective material, for a minimum period of one (1) year from the date of acceptance of the labor, materials and/or equipment by the Village. This warranty requirement shall remain in force for the full period, regardless of whether the awarded Bidder is under contract with the Village at the time of defect. Any payment by the Village on behalf of the services received from the awarded Bidder does not constitute a waiver of these warranty provisions.

82. ADDITIONAL FACILITIES

Although this Solicitation and resultant Contract may identify specific facilities or locations, it is hereby agreed and understood that any Village department or agency facility or related products may be added to this Contract at the option of the Village, for similar products or services. The awarded Bidder shall be invited to submit price quotes for these additional facilities or location. If these quotes are determined to be fair and reasonable, then the additional work will be awarded to the awarded Bidder by formal modification of the Contract or Purchase Order. The Village may determine to obtain price quotes for the additional facilities from non-contract awarded Bidder(s) in the event that fair and reasonable pricing is not obtained from the awarded Bidder, or for other reasons, at the Village's discretion.

83. PATENTS AND ROYALTIES

The awarded Bidder, without exception, shall indemnify and hold harmless the Village and its employees from liability of any nature or kind, including cost and expenses for, or as a result of, any copyrighted, patented, or unpatented invention, process, or article manufactured by the awarded Bidder. The awarded Bidder has no liability when such claim is solely and exclusively due to the combination, operation, or use of any article supplied hereunder with equipment or data not supplied by awarded Bidder or is based solely and exclusively upon the Village's alteration of the article. The Village will provide prompt written notification of a claim of copyright or patent infringement.

Further, if such a claim is made or is pending, the awarded Bidder may, at its option and expense, procure for the Village the right to continue use of, replace or modify the article to render it non-infringing. (If none of the alternatives are reasonably available, the Village agrees to return the article on request to the awarded Bidder and receive reimbursement, if any, as may be determined by a court of competent jurisdiction.) If the awarded Bidder uses any design, device, or materials covered by letters, patent or copyright, it is mutually agreed and understood without exception that the contract prices shall include all royalties or cost arising from the use of such design, device, or materials in any way involved in the work.

84. RELEASE OF CLAIM REQUIRED

The awarded Bidder must provide the Village with duly executed affidavits (subcontractor's statement of satisfaction) or releases of claim from all subcontractors and suppliers who have performed any work or supplied any materials for on the project as of that date. The affidavit or releases shall certify that said subcontractors and suppliers have been paid their proportionate share of all previous partial payments to the awarded Bidder. In the event such affidavits cannot be furnished, the awarded Bidder may submit an executed consent of surety to requisition payment; identifying the subcontractors and suppliers with the amounts for which the statement of satisfaction cannot be furnished. If the awarded Bidder fails to provide a consent of surety to requisition payment, the amount in dispute will be withheld until either the statement of satisfaction is furnished, or the consent of surety to requisition payment is furnished.

85. SUBCONTRACTORS OF WORK SHALL BE IDENTIFIED

As part of its Bid, the Bidder must identify any and all subcontractors that will be used in the performance of the proposed work, their capabilities and experience, and the portion of the work to be done by the subcontractor. The competency of the subcontractor(s) with respect to experience, skill, responsibility and business standing shall be considered by the Village when making the award in the best interest of the Village. If the Bidder fails to identify any and all sub- contractors in the Bid, the Bidder may be allowed to submit this documentation during the Bid evaluation period, if such action is in the best interest of the Village.

86. OTHER FORMS OR DOCUMENTS

If the Village is required by the awarded Bidder to complete and execute any other forms or documents in relation to this Solicitation, the terms, conditions, and requirements in this Solicitation shall take precedence to any and all conflicting or modifying terms, conditions or requirements of the Bidder's forms or documents

Specifications
ITB # 2022B-010

SUBMERSIBLE WASTEWATER PUMPS, ACCESSORIES, AND SERVICE

SUBMERSIBLE WASTEWATER PUMPS

A. Impeller Casing: The impeller casing shall have well-rounded water passages and smooth interior surfaces free from cracks, porosity, blowholes, or other irregularities. The discharge nozzle shall be flanged and sufficiently rigid to support the guide rail-mounted pumping unit under all operating conditions.

B. Impeller: The impeller shall be constructed of high-chrome hardened iron (HRC 60 minimum) or ceramic coated iron for increased protection against abrasion and corrosion. The impeller shall be dynamically balanced and securely locked to the shaft by means of a key and self-locking bolt or nut.

C. Wearing Rings/Plates: Renewable 316 SS wearing rings or plate shall be provided in the casing and on the impeller. The rings shall be positively locked in place.

D. Oil Chamber Housing: The oil chamber shall contain a drain plug and vent plug.

E. Coatings: All metal surfaces in contact with the pumped media, other than stainless steel, shall be coated in the factory with a zinc primer and polyester resin of high solids epoxy finish.

F. Seals:

1. Each pump shall be provided with two mechanical rotating shaft seals arranged in tandem and running in an oil chamber. The lower seal unit between the pump and the oil chamber shall contain one stationary and one positively driven rotating tungsten carbide ring. Mechanical seals shall be silicon carbide or tungsten carbide. Each interface shall be held in contact by an independent spring system designed to withstand maximum suction submergence. The seals shall require neither maintenance nor adjustment and shall be readily accessible for inspection and replacement.

2. Shaft seals lacking positively driven rotating members or conventional double mechanical seals which use a common single or double spring acting between the upper and lower units and requiring a pressure differential to offset external pressure and effect sealing will not be acceptable. The seals shall not rely upon the pumped media for lubrication and shall not be damaged if the pumps are run un-submerged for extended periods while pumping under load.

G. Sealing of mating Surfaces: All mating surfaces of major components shall be machined and fitted with O-rings where water-tight sealing is required. Sealing shall be accomplished by O-ring contact on four surfaces and O-ring compression in two planes, without reliance on a specific fastener torque or tension to obtain a watertight joint. The use of elliptical O-rings, gaskets, or seals requiring a specific fastener torque value to obtain and maintain compression and watertightness will not be acceptable. The use of secondary sealing compounds, gasket cement, grease, or other devices to obtain watertight joints will not be acceptable.

H. Discharge Base:

1. The pump and motor assembly shall be automatically connected to and supported by the discharge base and guiderails so that the unit can be removed from the wet well and replaced without the need for operating personnel to enter the pump intake basin.

I. Acceptable Pump Manufacturers:

1. Xylem
2. WILO
3. Barnes
4. Ebara

ELECTRIC MOTORS

A. Each pump shall be driven by an air-filled, totally submersible electric motor manufactured by the pump manufacturer. Each motor shall have a service factor of 1.15 the motor nameplate rating shall exceed the maximum horsepower required by the pump in the operating head of the entire pump curve. The pump shall operate over the entire range of the pump curve without overloading the motor or the operating in the service factor of the motor. The stator housing shall be an air-filled, watertight casing. Motor insulation shall be moisture resistant, Class H, 180 degrees C. each motor shall be NEMA Design B for continuous duty at 40 degrees C. ambient temperature and designed for at least 10 starts per hour.

B. The motor bearings shall be antifriction, permanently lubricated type. The lower bearing shall be fixed to carry the pump thrust and the upper bearing free to move axially. The bearing shall have a calculated AFBMA L10 Life rating of 50,000 hours when operating at maximum operating head range.

C. Each motor shall be capable of continuous operation in air (un-submerged) for at least 24 hours under pump full load conditions without exceeding the temperature rise limits for the motor insulation system

D. Each pump shall be equipped with one or more multi-conductor cable assemblies for power and control. Each multi-conductor assembly containing power cables shall be provided with a separate grounding conductor. Each cable assembly shall bear a permanently embossed code or legend indicating that the cable is suitable for submerged use. No splicing of cables shall be allowed.

E. The cable entry water seal shall include a strain relief and a grommet type seal designed so that a specific fastener torque is not required to ensure a watertight, submersible seal. The cable entry junction box and motor shall be separated by a stator lead sealing gland or a terminal board. The junction box shall isolate the motor interior from moisture gaining access through the top of the stator housing.

WARRANTY

A. Warranty shall be a 5-year full manufacturer's guarantee. The guarantee shall be against the manufacturing and/or design inadequacies, materials, and workmanship not in conformity,

improper assembly, hidden damage, or other circumstances which would cause the equipment to fail under normal conditions.

B. The manufacturer shall replace equipment which fails with the term of the guarantee with reasonable promptness free of charge, including all shipping costs.

REMAINDER OF THIS PAGE INTENTIONALLY LEFT BLANK
SIGNATURE PAGE TO FOLLOW

BID SUBMITTAL SIGNATURE PAGE – ITB # 2022B-010

ITEM	DESCRIPTION	UNIT PRICE
1.	Pumps (% Discount from Current MSRP)	% 30
2.	Parts and Materials (% Discount from Current M	% 20
3.	Hourly Rate for Repairs ($/HR)	$ 125.00

*** PLEASE AFFIX SIGNATURE WHERE INDICATED**
(FAILURE TO DO SO SHALL RESULT IN THE REJECTION OF YOUR ITB)

By signature on this document, Bidder acknowledges and agrees that its offer includes and accepts all terms, conditions, and specifications of the Village's ITB solicitation as originally published, without exception, change or alteration of any kind, except as may have been published by the Village in official amendments prior to the submission time.

FIRM NAME: (Enter the entire legal name of the quoting entity) PSI TECHNOLOGIES, INC

DATE: 4.26.22

* SIGNATURE: _____

PRINT NAME: Eric Doverspike

PRINT TITLE: President

ADDRESS: 3520 Investment Lane #3

CITY / STATE: Riviera Beach, FL ZIP CODE: 33404

TELEPHONE # (305) 998-1371

TOLL FREE # ( )

E-MAIL: Eric@psi-Tech inc.com

FAX #: (866) 374-1639

APPLICABLE LICENSE(S) NUMBER # N/A TYPE:

FEDERAL ID # 81-4980985

ACKNOWLEDGEMENT OF ADDENDA
ITB # 2022B-010

SUBMERSIBLE WASTEWATER PUMPS, ACCESSORIES, AND SERVICE

INSTRUCTIONS: COMPLETE PART I OR PART II, WHICHEVER APPLIES

PART I:

List below the dates of issue for each addendum received in connection with this Solicitation:

Addendum #1, Dated April 12, 2022

Addendum #2, Dated _____

Addendum #3, Dated _____

Addendum #4, Dated _____

Addendum #5, Dated _____

PART II:

NO ADDENDUM WAS RECEIVED IN CONNECTION WITH THIS SOLICITATION

_____
Firm Name

_____
Signature

_____
Name and Title (Print or Type)

_____
Date

AFFIDAVITS, PERFORMANCE AND PAYMENT BONDS FORMAT, LETTER OF CREDIT FORMAT

AFFIDAVITS

The forms listed below must be completed by an official having legal authorization to contractually bind the company or firm. Each signature represents a binding commitment upon the Bidder to provide the goods and/or services offered to the Village if the Bidder is determined to be the lowest responsive and responsible Bid.

a. Bid Submittal Signature Page

b. Acknowledgement of Addenda

c. Conflict of Interest Disclosure Form

d. Notification of Public Entity Crimes Law

e. Notification of Public Records Law

f. Drug-Free Workplace

g. Non-Collusion Affidavit

h. Bidder Qualification Form

CONFLICT OF INTEREST DISCLOSURE FORM

The award of this contract is subject to the provisions of Chapter 112, *Florida Statutes*. All Bidders must disclose within their Bid: the name of any officer, director, or agent who is also an employee of the Village of Palm Springs.

Furthermore, all Bidder must disclose the name of any Village employee who owns, directly, or indirectly, an interest of more than five percent (5%) in the Bidder's firm or any of its branches.

The purpose of this disclosure form is to give the Village the information needed to identify potential conflicts of interest for evaluation team members and other key personnel involved in the award of this contract.

The term "conflict of interest" refers to situations in which financial or other personal considerations may adversely affect, or have the appearance of adversely affecting, an employee's professional judgment in exercising any Village duty or responsibility in administration, management, instruction, research, or other professional activities.

Please check one of the following statements and attach additional documentation if necessary:

To the best of our knowledge, the undersigned firm has no potential conflict of interest due to any other Cities, Counties, contracts, or property interest for this Bid.

The undersigned firm, by attachment to this form, submits information which may be a potential conflict of interest due to other Cities, Counties, contracts, or property interest for this Bid.

Acknowledged by: Eric Doversake

Firm Name: PSI TECHNOLOGIES, Inc

Signature: _____

Name and Title (Print or Type): Eric - President

Date: 4.26.22

NOTIFICATION OF PUBLIC ENTITY CRIMES LAW

Pursuant to Section 287.133, *Florida Statutes*, you are hereby notified that a person or affiliate who has been placed on the convicted contractors list following a conviction for a public entity crime may not submit a Bid on a contract to provide any goods or services to a public entity, may not submit a Bid on a contract with a public entity for the construction or repair of a public building or public work, may not submit Bids on leases or real property to a public entity, may not be awarded or perform work as a contractor, supplier, sub-Bidder, or consultant under a contract with any public entity, and may not transact business with any public entity in excess of the threshold amount provided in Section 287.017 [F.S.] for Category Two [$35,000.00] for a period of thirty-six (36) months from the date of being placed on the convicted contractors list.

Acknowledged by: Eric Doverspike

Firm Name: PSI TECHNOLOGIES, Inc

Signature: [signature]

Name and Title (Print or Type): Eric – President

Date: 4.26.22

Notification of Public Records Law Pertaining to Public Contracts and Requests for Contractor Records Pursuant to Chapter 119, *Florida Statutes*

Pursuant to Chapter 119, Florida *Statutes*, Contractor shall comply with the public records law by keeping and maintaining public records required by the Village of Palm Springs in order to perform the service. Upon request from the Village of Palm Springs' custodian of public records, Contractor shall provide the Village of Palm Springs with a copy of the requested records or allow the records to be inspected or copied within a reasonable time at a cost that does not exceed the cost provided in Chapter 119, *Florida Statutes* or as otherwise provided by law. Contractor shall ensure that public records that are exempt or confidential and exempt from public records disclosure requirements are not disclosed except as authorized by law for the duration of the contract term and following completion of the contract If the Contractor does not transfer the records to the Village of Palm Springs. Contractor upon completion of the contract, shall transfer, at no cost, to the Village of Palm Springs all public records in possession of the Contractor or keep and maintain public records required by the Village of Palm Springs in order to perform the service. If the Contractor transfers all public records to the Village of Palm Springs upon completion of the contract, the Contractor shall destroy any duplicate public records that are exempt or confidential and exempt from public records disclosure requirements. If the Contractor keeps and maintains public records upon completion of the contract, the Contractor shall meet all applicable requirements for retaining public records. All records stored electronically must be provided to the Village of Palm Springs, upon request from the Village of Palm Springs' custodian of public records, in a format that is compatible with the information technology systems of the Village of Palm Springs.

IF THE CONTRACTOR HAS QUESTIONS REGARDING THE APPLICATION OF CHAPTER 119, FLORIDA STATUTES, TO THE CONTRACTOR'S DUTY TO PROVIDE PUBLIC RECORDS RELATING TO THIS CONTRACT, CONTACT THE CUSTODIAN OF PUBLIC RECORDS OR DESIGNEE AT 561-584-8200 Ext. 8431, kwynn@vpsfl.org, OR BY MAIL AT VILLAGE OF PALM SPRINGS, 226 CYPRESS LANE, PALM SPRINGS, FL 33461.

Acknowledged by:

Eric Doverspike

Firm Name

PSI Technologies, Inc

Signature

Name and Title (Print or Type)

Eric - President

Date

4.26.22

N/A

DRUG-FREE WORKPLACE

_____ is a drug-free workplace and has
(Company Name)
a substance abuse policy in accordance with and pursuant to Section 440.102, *Florida Statutes*.

Acknowledged by: _____

Firm Name: _____

Signature: _____

Name and Title (Print or Type): _____

Date: _____

NON-COLLUSION AFFIDAVIT

STATE OF FLORIDA COUNTY OF BRWD

Before me, the undersigned authority, personally appeared Patti Marchetti, who, after being by me first duly sworn, deposes and says of his/her personal knowledge that:

a. He / She is Secretary/Treasurer/Director of PSI Technologies Inc, the Bidder that has submitted a Bid to perform work for the following:

ITB No.: 2022B-010 Title: Submersible Wastewater Pumps,Accessories and Service

b. He / She is fully informed respecting the preparation and contents of the attached Request for Bids, and of all pertinent circumstances respecting such Solicitation. Such Bid is genuine and is not a collusive or sham Bid.

c. Neither the said Bidder nor any of its officers, partners, owners, agents, representatives, employees, or parties in interest, including this affiant, has in any way colluded, conspired, connived, or agreed, directly or indirectly, with any other Bidder, firm, or person to submit a collusive or sham Bid in connection with the Solicitation and contract for which the attached Bid has been submitted or to refrain from proposing in connection with such Solicitation and contract, or has in any manner, directly or indirectly, sought by agreement or collusion or communication or conference with any other Bidder, firm, or person to fix the price or prices in the attached Bid or any other Bidder, or to fix any overhead, profit, or cost element of the Bid price or the Bid price of any other Bidder, or to secure through any collusion, conspiracy, connivance, or unlawful agreement any advantage against the Village or any person interested in the proposed contract.

d. The price or prices quoted in the attached Bid are fair and proper and are not tainted by any collusion, conspiracy, connivance, or unlawful agreement on the part of the Bidder or any of its agents, representatives, owners, employees, or parties in interest, including this affiant.

Patti Marchetti

Signature

Subscribed and sworn to (or affirmed) before me this 17 day of April 2022, by Patti Marchetti, who is personally known to me or who has produced driver's license as identification.

SEAL

Notary Signature Ketsia McClease Notary Name: Ketsia McClease

Notary Public (State): Virginia County of Norfolk

My Commission No: 327724 Expires on: 04/30/2023

This notarial act was performed online by way of two-way audio/video communication technology.

KETSIA MCCLEASE
Electronic Notary Public
Commonwealth of Virginia
Registration No. 327724
My Commission Expires Apr 30, 2023

Village of Palm Springs

PUBLIC SERVICE DEPARTMENT

Submersible Wastewater Pumps, Accessories, and Service
Addendum No. 1
April 12, 2022

BIDS DUE: 2:00 PM, Local Time, April 27, 2022

TO ALL VENDORS BIDDING ON THIS PROJECT:

The changes, additions, substitutions, and/or deletions contained in Addendum No. 1 are hereby made a part of the Bid Documents for the **Submersible Wastewater Pumps, Accessories, and Service**, fully and completely as if the same were fully set forth herein.

A. QUESTIONS FROM BIDDERS

1. **Question:** Can you please confirm that the above referenced solicitation is asking just for the equipment and that no construction/installation services are required?

   Answer: The solicitation is asking for the supply of pumps, accessories and necessary repairs to the provided pumps not construction/installation at Village owned cites.

2. **Question:** Are you accepting equal pump manufacturers?

   Answer: Other pump manufacturers will be reviewed and considered.

3. **Question:** We would like to request that the Village revise the Indemnification clause

   Answer: Village staff will review your request and issue a response in a later addendum if a change occurs.

4. **Question:** Will you be taking a single pump brand based off this Bid Submittal request? Or will all four listed manufacturers be accepted per their proposed bid submittal?

   Answer: The Village's intention is to award to multiple manufacturers.

Addendum No. 1

IN THE SPECIFICATIONS

1. A chart has been added to the Bid Submittal page to include line items.

Receipt acknowledged and conditions agreed to the 26 day of APRIL, 2022.

PSI TECHNOLOGIES, INC — Bidder

ERIC DOVROPIKE — By

END OF ADDENDUM

CERTIFICATE OF LIABILITY INSURANCE

DATE (MM/DD/YYYY): 04/15/2022

THIS CERTIFICATE IS ISSUED AS A MATTER OF INFORMATION ONLY AND CONFERS NO RIGHTS UPON THE CERTIFICATE HOLDER. THIS CERTIFICATE DOES NOT AFFIRMATIVELY OR NEGATIVELY AMEND, EXTEND OR ALTER THE COVERAGE AFFORDED BY THE POLICIES BELOW. THIS CERTIFICATE OF INSURANCE DOES NOT CONSTITUTE A CONTRACT BETWEEN THE ISSUING INSURER(S), AUTHORIZED REPRESENTATIVE OR PRODUCER, AND THE CERTIFICATE HOLDER.

IMPORTANT: If the certificate holder is an ADDITIONAL INSURED, the policy(ies) must have ADDITIONAL INSURED provisions or be endorsed. If SUBROGATION IS WAIVED, subject to the terms and conditions of the policy, certain policies may require an endorsement. A statement on this certificate does not confer rights to the certificate holder in lieu of such endorsement(s).

PRODUCER	CONTACT NAME: Conversion Cleanup	
Brown & Brown of Florida, Inc. 1201 W Cypress Creek Rd Suite 130 Fort Lauderdale FL 33309	PHONE (A/C, No, Ext): (954) 776-2222	FAX (A/C, No): (954) 776-4446
	E-MAIL ADDRESS:	

INSURER(S) AFFORDING COVERAGE		NAIC #
INSURER A :	Monroe Guaranty Insurance Company	32506
INSURER B :	Progressive Express Insurance Company	10193
INSURER C :	National Union Fire Insurance Company of Pittsburgh, Pa.	19445
INSURER D :	Zenith Insurance Company	13269
INSURER E :		
INSURER F :		

INSURED
PSI Technologies, Inc.
151 N Nob Hill Road
Suite 293
Plantation FL 33324

COVERAGES **CERTIFICATE NUMBER:** 21-22 **REVISION NUMBER:**

THIS IS TO CERTIFY THAT THE POLICIES OF INSURANCE LISTED BELOW HAVE BEEN ISSUED TO THE INSURED NAMED ABOVE FOR THE POLICY PERIOD INDICATED. NOTWITHSTANDING ANY REQUIREMENT, TERM OR CONDITION OF ANY CONTRACT OR OTHER DOCUMENT WITH RESPECT TO WHICH THIS CERTIFICATE MAY BE ISSUED OR MAY PERTAIN, THE INSURANCE AFFORDED BY THE POLICIES DESCRIBED HEREIN IS SUBJECT TO ALL THE TERMS, EXCLUSIONS AND CONDITIONS OF SUCH POLICIES. LIMITS SHOWN MAY HAVE BEEN REDUCED BY PAID CLAIMS.

INSR LTR	TYPE OF INSURANCE	ADDL INSD	SUBR WVD	POLICY NUMBER	POLICY EFF (MM/DD/YYYY)	POLICY EXP (MM/DD/YYYY)	LIMITS	
A	[X] COMMERCIAL GENERAL LIABILITY [ ] CLAIMS-MADE [X] OCCUR GEN'L AGGREGATE LIMIT APPLIES PER: [ ] POLICY [ ] PRO-JECT [ ] LOC [X] OTHER: Included			GL10005023202	07/20/2021	07/20/2022	EACH OCCURRENCE DAMAGE TO RENTED PREMISES (Ea occurrence) MED EXP (Any one person) PERSONAL & ADV INJURY GENERAL AGGREGATE PRODUCTS - COMP/OP AGG Employee Benefits	$ 1,000,000 $ 300,000 $ 10,000 $ 1,000,000 $ 2,000,000 $ 2,000,000 $ 1,000,000
B	AUTOMOBILE LIABILITY [X] ANY AUTO [ ] OWNED AUTOS ONLY [ ] HIRED AUTOS ONLY [ ] SCHEDULED AUTOS [ ] NON-OWNED AUTOS ONLY			07887053-3	07/18/2021	07/18/2022	COMBINED SINGLE LIMIT (Ea accident) BODILY INJURY (Per person) BODILY INJURY (Per accident) PROPERTY DAMAGE (Per accident) PIP-Basic	$ 1,000,000 $ $ $ $ 10,000
C	[ ] UMBRELLA LIAB [X] OCCUR [X] EXCESS LIAB [ ] CLAIMS-MADE [ ] DED [X] RETENTION $ 0			EBU066183705	07/18/2021	07/18/2022	EACH OCCURRENCE AGGREGATE	$ 2,000,000 $ 2,000,000 $
D	WORKERS COMPENSATION AND EMPLOYERS' LIABILITY ANY PROPRIETOR/PARTNER/EXECUTIVE OFFICER/MEMBER EXCLUDED? (Mandatory in NH) Y/N: Y N/A If yes, describe under DESCRIPTION OF OPERATIONS below			Z136108203	07/20/2021	07/20/2022	[X] PER STATUTE [ ] OTH-ER E.L. EACH ACCIDENT E.L. DISEASE - EA EMPLOYEE E.L. DISEASE - POLICY LIMIT	$ $ 500000 $ 500000 $ 500000

DESCRIPTION OF OPERATIONS / LOCATIONS / VEHICLES (ACORD 101, Additional Remarks Schedule, may be attached if more space is required)

Village of Palm Springs is named as Additional Insured. Village of Palm Springs shall be notified at least thirty (30) days in advance of cancellation, non-renewal, or adverse change

CERTIFICATE HOLDER

Village of Palm Springs
226 Cypress Lane
Palm Springs FL 33461

CANCELLATION

SHOULD ANY OF THE ABOVE DESCRIBED POLICIES BE CANCELLED BEFORE THE EXPIRATION DATE THEREOF, NOTICE WILL BE DELIVERED IN ACCORDANCE WITH THE POLICY PROVISIONS.

AUTHORIZED REPRESENTATIVE

© 1988-2015 ACORD CORPORATION. All rights reserved.

ACKNOWLEDGEMENT OF ADDENDA
ITB # 2022B-010

SUBMERSIBLE WASTEWATER PUMPS, ACCESSORIES, AND SERVICE

INSTRUCTIONS: COMPLETE PART I OR PART II, WHICHEVER APPLIES

PART I:

List below the dates of issue for each addendum received in connection with this Solicitation:

Addendum #1, Dated **APRIL 12, 2022**

Addendum #2, Dated _____

Addendum #3, Dated _____

Addendum #4, Dated _____

Addendum #5, Dated _____

PART II: **N/A**

NO ADDENDUM WAS RECEIVED IN CONNECTION WITH THIS SOLICITATION

_____
Firm Name

_____
Signature

_____
Name and Title (Print or Type)

_____
Date

BID SUBMITTAL SIGNATURE PAGE – ITB # 2022B-010

* PLEASE AFFIX SIGNATURE WHERE INDICATED
(FAILURE TO DO SO SHALL RESULT IN THE REJECTION OF YOUR ITB)

By signature on this document, Bidder acknowledges and agrees that its offer includes and accepts all terms, conditions, and specifications of the Village's ITB solicitation as originally published, without exception, change or alteration of any kind, except as may have been published by the Village in official amendments prior to the submission time.

WASTEWATER SOLUTIONS, LLC FIRM NAME: **(Enter the entire legal name of the quoting entity)**	DATE: **04/26/2022**
* **SIGNATURE**: 	PRINT NAME: **ARTURO GARCIA** PRINT TITLE: **PRESIDENT/OWNER**
ADDRESS: **102 NE 2ND STREET SUITE 510** CITY / STATE: **BOCA RATON, FL** ZIP CODE: **33432**	
TELEPHONE # (**954**) **483-9261** TOLL FREE # ( )	E-MAIL: **matias@wws-llc.com** FAX #: (**N/A**)
APPLICABLE LICENSE(S) NUMBER # **L14000127855** TYPE: **LIMITED LIABILITY COMPANY**	
FEDERAL ID # **47-1877641**	

CONFLICT OF INTEREST DISCLOSURE FORM

The award of this contract is subject to the provisions of Chapter 112, *Florida Statutes*. All Bidders must disclose within their Bid: the name of any officer, director, or agent who is also an employee of the Village of Palm Springs.

Furthermore, all Bidder must disclose the name of any Village employee who owns, directly, or indirectly, an interest of more than five percent (5%) in the Bidder's firm or any of its branches.

The purpose of this disclosure form is to give the Village the information needed to identify potential conflicts of interest for evaluation team members and other key personnel involved in the award of this contract.

The term "conflict of interest" refers to situations in which financial or other personal considerations may adversely affect, or have the appearance of adversely affecting, an employee's professional judgment in exercising any Village duty or responsibility in administration, management, instruction, research, or other professional activities.

Please check one of the following statements and attach additional documentation if necessary:

To the best of our knowledge, the undersigned firm has no potential conflict of interest due to any other Cities, Counties, contracts, or property interest for this Bid.

The undersigned firm, by attachment to this form, submits information which may be a potential conflict of interest due to other Cities, Counties, contracts, or property interest for this Bid.

Acknowledged by: **ARTURO GARCIA**

Firm Name: **WASTEWATER SOLUTIONS, LLC**

Signature: 

Name and Title (Print or Type): **ARTURO GARCIA PRESIDENT/OWNER**

Date: **04/26/2022**

CERTIFICATE OF LIABILITY INSURANCE

DATE (MM/DD/YYYY): 03/07/2022

THIS CERTIFICATE IS ISSUED AS A MATTER OF INFORMATION ONLY AND CONFERS NO RIGHTS UPON THE CERTIFICATE HOLDER. THIS CERTIFICATE DOES NOT AFFIRMATIVELY OR NEGATIVELY AMEND, EXTEND OR ALTER THE COVERAGE AFFORDED BY THE POLICIES BELOW. THIS CERTIFICATE OF INSURANCE DOES NOT CONSTITUTE A CONTRACT BETWEEN THE ISSUING INSURER(S), AUTHORIZED REPRESENTATIVE OR PRODUCER, AND THE CERTIFICATE HOLDER.

IMPORTANT: If the certificate holder is an ADDITIONAL INSURED, the policy(ies) must have ADDITIONAL INSURED provisions or be endorsed. If SUBROGATION IS WAIVED, subject to the terms and conditions of the policy, certain policies may require an endorsement. A statement on this certificate does not confer rights to the certificate holder in lieu of such endorsement(s).

PRODUCER Liberty Mutual Insurance PO Box 188065 Fairfield OH 45018	**CONTACT NAME:** **PHONE (A/C, No, Ext):** 800-962-7132 **FAX (A/C, No):** 800-845-3666 **E-MAIL ADDRESS:** BusinessService@LibertyMutual.com
INSURED Wastewater Solutions Llc 102 Ne 2nd St Ste 510 Boca Raton FL 33432	**INSURER(S) AFFORDING COVERAGE** — **NAIC #** **INSURER A :** Ohio Security Insurance Company — 24082 **INSURER B :** **INSURER C :** **INSURER D :** **INSURER E :** **INSURER F :**

COVERAGES **CERTIFICATE NUMBER:** 0005794508 **REVISION NUMBER:**

THIS IS TO CERTIFY THAT THE POLICIES OF INSURANCE LISTED BELOW HAVE BEEN ISSUED TO THE INSURED NAMED ABOVE FOR THE POLICY PERIOD INDICATED. NOTWITHSTANDING ANY REQUIREMENT, TERM OR CONDITION OF ANY CONTRACT OR OTHER DOCUMENT WITH RESPECT TO WHICH THIS CERTIFICATE MAY BE ISSUED OR MAY PERTAIN, THE INSURANCE AFFORDED BY THE POLICIES DESCRIBED HEREIN IS SUBJECT TO ALL THE TERMS, EXCLUSIONS AND CONDITIONS OF SUCH POLICIES. LIMITS SHOWN MAY HAVE BEEN REDUCED BY PAID CLAIMS.

INSR LTR	TYPE OF INSURANCE	ADDL INSD	SUBR WVD	POLICY NUMBER	POLICY EFF (MM/DD/YYYY)	POLICY EXP (MM/DD/YYYY)	LIMITS	
A	[X] **COMMERCIAL GENERAL LIABILITY** [ ] CLAIMS-MADE [X] OCCUR GEN'L AGGREGATE LIMIT APPLIES PER: [X] POLICY [X] PRO-JECT [ ] LOC [ ] OTHER:	X	X	BKS58450670	12/05/2021	12/05/2022	EACH OCCURRENCE DAMAGE TO RENTED PREMISES (Ea occurrence) MED EXP (Any one person) PERSONAL & ADV INJURY GENERAL AGGREGATE PRODUCTS - COMP/OP AGG	$ 1000000 $ 300000 $ 15000 $ 1000000 $ 2000000 $ 2000000
	AUTOMOBILE LIABILITY [ ] ANY AUTO [ ] OWNED AUTOS ONLY [ ] SCHEDULED AUTOS [ ] HIRED AUTOS ONLY [ ] NON-OWNED AUTOS ONLY						COMBINED SINGLE LIMIT (Ea accident) BODILY INJURY (Per person) BODILY INJURY (Per accident) PROPERTY DAMAGE (Per accident)	$ $ $ $
	[ ] **UMBRELLA LIAB** [ ] OCCUR [ ] **EXCESS LIAB** [ ] CLAIMS-MADE [ ] DED [ ] RETENTION $						EACH OCCURRENCE AGGREGATE	$ $
	WORKERS COMPENSATION AND EMPLOYERS' LIABILITY Y / N ANYPROPRIETOR/PARTNER/EXECUTIVE OFFICER/MEMBER EXCLUDED? [ ] N / A **(Mandatory in NH)** If yes, describe under DESCRIPTION OF OPERATIONS below						[ ] PER STATUTE [ ] OTH-ER E.L. EACH ACCIDENT E.L. DISEASE - EA EMPLOYEE E.L. DISEASE - POLICY LIMIT	 $ $ $

DESCRIPTION OF OPERATIONS / LOCATIONS / VEHICLES (ACORD 101, Additional Remarks Schedule, may be attached if more space is required)

Proof of Insurance

CERTIFICATE HOLDER

Wastewater Solutions Llc
102 Ne 2nd St Ste 510
Boca Raton FL 33432

CANCELLATION

SHOULD ANY OF THE ABOVE DESCRIBED POLICIES BE CANCELLED BEFORE THE EXPIRATION DATE THEREOF, NOTICE WILL BE DELIVERED IN ACCORDANCE WITH THE POLICY PROVISIONS.

AUTHORIZED REPRESENTATIVE



© 1988-2015 ACORD CORPORATION. All rights reserved.

DRUG-FREE WORKPLACE

WASTEWATER SOLUTIONS, LLC is a drug-free workplace and has
(Company Name)
a substance abuse policy in accordance with and pursuant to Section 440.102, *Florida Statutes*.

Acknowledged by: **ARTURO GARCIA**

Firm Name: **WASTEWATER SOLUTIONS, LLC**

Signature: 

Name and Title (Print or Type): **ARTURO GARCIA PRESIDENT/OWNER**

Date: **04/26/2022**

NON-COLLUSION AFFIDAVIT

STATE OF FLORIDA COUNTY OF PALM BEACH

Before me, the undersigned authority, personally appeared ARTURO GARCIA, who, after being by me first duly sworn, deposes and says of his/her personal knowledge that:

a. He / She is ARTURO GARCIA of WASTEWATER SOLUTIONS, LLC, the Bidder that has submitted a Bid to perform work for the following:

ITB No.: ITB-2022B-010-0-2022/TG Title: PRESIDENT/OWNER

b. He / She is fully informed respecting the preparation and contents of the attached Request for Bids, and of all pertinent circumstances respecting such Solicitation. Such Bid is genuine and is not a collusive or sham Bid.

c. Neither the said Bidder nor any of its officers, partners, owners, agents, representatives, employees, or parties in interest, including this affiant, has in any way colluded, conspired, connived, or agreed, directly or indirectly, with any other Bidder, firm, or person to submit a collusive or sham Bid in connection with the Solicitation and contract for which the attached Bid has been submitted or to refrain from proposing in connection with such Solicitation and contract, or has in any manner, directly or indirectly, sought by agreement or collusion or communication or conference with any other Bidder, firm, or person to fix the price or prices in the attached Bid or any other Bidder, or to fix any overhead, profit, or cost element of the Bid price or the Bid price of any other Bidder, or to secure through any collusion, conspiracy, connivance, or unlawful agreement any advantage against the Village or any person interested in the proposed contract.

d. The price or prices quoted in the attached Bid are fair and proper and are not tainted by any collusion, conspiracy, connivance, or unlawful agreement on the part of the Bidder or any of its agents, representatives, owners, employees, or parties in interest, including this affiant.

Signature

Subscribed and sworn to (or affirmed) before me this 25th day of April 2022, by Arturo Garcia, who is personally known to me or who has produced FL DL as identification.

SEAL

Notary Signature Notary Name: Samuel Moseley

Notary Public (State): Florida

My Commission No: HH198731 Expires on: 11/15/2025

Notary Public State of Florida
Samuel Moseley
My Commission
HH 198731
Exp.11/15/2025

NOTIFICATION OF PUBLIC ENTITY CRIMES LAW

Pursuant to Section 287.133, *Florida Statutes*, you are hereby notified that a person or affiliate who has been placed on the convicted contractors list following a conviction for a public entity crime may not submit a Bid on a contract to provide any goods or services to a public entity, may not submit a Bid on a contract with a public entity for the construction or repair of a public building or public work, may not submit Bids on leases or real property to a public entity, may not be awarded or perform work as a contractor, supplier, sub-Bidder, or consultant under a contract with any public entity, and may not transact business with any public entity in excess of the threshold amount provided in Section 287.017 [F.S.] for Category Two [$35,000.00] for a period of thirty-six (36) months from the date of being placed on the convicted contractors list.

Acknowledged by: ARTURO GARCIA

Firm Name: WASTEWATER SOLUTIONS, LLC

Signature: _____

Name and Title (Print or Type): ARTURO GARCIA PRESIDENT/OWNER

Date: 04/26/2022

Notification of Public Records Law Pertaining to Public Contracts and Requests for Contractor Records Pursuant to Chapter 119, *Florida Statutes*

Pursuant to Chapter 119, Florida *Statutes*, Contractor shall comply with the public records law by keeping and maintaining public records required by the Village of Palm Springs in order to perform the service. Upon request from the Village of Palm Springs' custodian of public records, Contractor shall provide the Village of Palm Springs with a copy of the requested records or allow the records to be inspected or copied within a reasonable time at a cost that does not exceed the cost provided in Chapter 119, *Florida Statutes* or as otherwise provided by law. Contractor shall ensure that public records that are exempt or confidential and exempt from public records disclosure requirements are not disclosed except as authorized by law for the duration of the contract term and following completion of the contract If the Contractor does not transfer the records to the Village of Palm Springs. Contractor upon completion of the contract, shall transfer, at no cost, to the Village of Palm Springs all public records in possession of the Contractor or keep and maintain public records required by the Village of Palm Springs in order to perform the service. If the Contractor transfers all public records to the Village of Palm Springs upon completion of the contract, the Contractor shall destroy any duplicate public records that are exempt or confidential and exempt from public records disclosure requirements. If the Contractor keeps and maintains public records upon completion of the contract, the Contractor shall meet all applicable requirements for retaining public records. All records stored electronically must be provided to the Village of Palm Springs, upon request from the Village of Palm Springs' custodian of public records, in a format that is compatible with the information technology systems of the Village of Palm Springs.

IF THE CONTRACTOR HAS QUESTIONS REGARDING THE APPLICATION OF CHAPTER 119, FLORIDA STATUTES, TO THE CONTRACTOR'S DUTY TO PROVIDE PUBLIC RECORDS RELATING TO THIS CONTRACT, CONTACT THE CUSTODIAN OF PUBLIC RECORDS OR DESIGNEE AT 561-584-8200 Ext. 8431, kwynn@vpsfl.org, OR BY MAIL AT VILLAGE OF PALM SPRINGS, 226 CYPRESS LANE, PALM SPRINGS, FL 33461.

Acknowledged by:

ARTURO GARCIA

Firm Name



Signature

ARTURO GARCIA PRESIDENT/OWNER

Name and Title (Print or Type)

04/26/2022

Date

Gmail

Matias Roman <matias@wws-llc.com>

HRSD Solicitation # 405617-2: Submersible Solids Handling Pump

Matias Roman <matias@wws-llc.com> Mon, Apr 18, 2022 at 10:16 AM
To: "Bittler, Robert" <RBittler@hrsd.com>
Cc: Hector Cordova <hector@wws-llc.com>, Luis Duran <luis@wws-llc.com>, Nancy Morris <nancy@wws-llc.com>, Arturo Garcia <arturo@wws-llc.com>

Hello Robert,

Thank you for contacting us, please find below additional 10 references.

City of Hollywood
Luis Montoya
Phone: 954-967-4230 Ext. 5405
lmontoya@hollywoodfl.org

City of Hollywood
Jorge Marin
Phone: 954-967-4243
Phone: 954-554-4417
JOMARIN@hollywoodfl.org

City of Hialeah Gardens
Andres Delgado
Phone: 305-822-3017
adelgado@cityofhialeahgardens.com

City of Miramar
Francois A. Domond, P.E.
Phone: 954.883.6813
fdomond@miramarfl.gov

City of Miramar
Mark Roberts
Phone: 954-901-1022
mdroberts@miramarfl.gov

USARMY CENWW (USA) U.S. Army Corps of Engineers
Jeffrey Smutny
Phone: 509-843-2260
Jeffrey.D.Smutny@usace.army.mil

USARMY CENWW (USA) U.S. Army Corps of Engineers
Aaron L. Corgard
Phone: 509.843.2216
Aaron.L.Corgard@usace.army.mil

USARMY CENWP (USA) U.S. Army Corps of Engineers
Robbie Newland
Phone:(503) 808-4634
ROBBIE.R.NEWLAND@usace.army.mil

Desoto County
Jeannine Tatum
Phone: 863-491-7500
j.tatum@desotobocc.com

City of Port Townsend

Ian Jablonski
Phone: 360-379-5001
ijablonski@cityofpt.us

We are highly interested in working with you and the Hampton Roads Sanitation District.

I will contact you tomorrow to see if you could reach our references.

Thank you Robert, please let us know if you have any questions or need any additional information from us.

Matias Roman

WASTEWATER SOLUTIONS LLC

102 NE 2nd Street
Suite 510
Boca Raton FL 33432
matias@wws-llc.com
(561) 462-2019 Mobile
(561) 200-5717 Office
Please check all our product lines at
http://www.wws-llc.com/product-lines.html


State of Florida

Minority Business Certification

Wastewater Solutions, LLC

Is certified under the provisions of
287 and 295.187, Florida Statutes, for a period from:
01/08/2021 to 01/08/2023

Jonathan R. Satter, Secretary
Florida Department of Management Services

MANAGEMENT SERVICES
Office of Supplier Diversity

Office of Supplier Diversity
4050 Esplanade Way, Suite 380
Tallahassee, FL 32399
850-487-0915
www.dms.myflorida.com/osd

[Quoted text hidden]

Village of Palm Springs

PUBLIC SERVICE DEPARTMENT

Submersible Wastewater Pumps, Accessories, and Service
Addendum No. 1
April 12, 2022

BIDS DUE: 2:00 PM, Local Time, April 27, 2022

TO ALL VENDORS BIDDING ON THIS PROJECT:

The changes, additions, substitutions, and/or deletions contained in Addendum No. 1 are hereby made a part of the Bid Documents for the **Submersible Wastewater Pumps, Accessories, and Service**, fully and completely as if the same were fully set forth herein.

A. QUESTIONS FROM BIDDERS

1. **Question:** Can you please confirm that the above referenced solicitation is asking just for the equipment and that no construction/installation services are required?

   Answer: The solicitation is asking for the supply of pumps, accessories and necessary repairs to the provided pumps not construction/installation at Village owned cites.

2. **Question:** Are you accepting equal pump manufacturers?

   Answer: Other pump manufacturers will be reviewed and considered.

3. **Question:** We would like to request that the Village revise the Indemnification clause

   Answer: Village staff will review your request and issue a response in a later addendum if a change occurs.

4. **Question:** Will you be taking a single pump brand based off this Bid Submittal request? Or will all four listed manufacturers be accepted per their proposed bid submittal?

   Answer: The Village's intention is to award to multiple manufacturers.

Addendum No. 1

IN THE SPECIFICATIONS

1. A chart has been added to the Bid Submittal page to include line items.

Receipt acknowledged and conditions agreed to the 26th day of APRIL, 2022.

WASTEWATER SOLUTIONS, LLC
Bidder

ARTURO GARCIA
By

END OF ADDENDUM

BID SUBMITTAL SIGNATURE PAGE – ITB # 2022B-010

ITEM	DESCRIPTION	UNIT PRICE
1.	Pumps (% Discount from Current MSRP)	% N/A
2.	Parts and Materials (% Discount from Current M	% N/A
3.	Hourly Rate for Repairs ($/HR)	$ N/A

* PLEASE AFFIX SIGNATURE WHERE INDICATED
(FAILURE TO DO SO SHALL RESULT IN THE REJECTION OF YOUR ITB)

By signature on this document, Bidder acknowledges and agrees that its offer includes and accepts all terms, conditions, and specifications of the Village's ITB solicitation as originally published, without exception, change or alteration of any kind, except as may have been published by the Village in official amendments prior to the submission time.

FIRM NAME: **WASTEWATER SOLUTIONS, LLC** (Enter the entire legal name of the quoting entity)

DATE: **04/26/2022**

* **SIGNATURE**: 

PRINT NAME: **ARTURO GARCIA**

PRINT TITLE: **PRESIDENT/OWNER**

ADDRESS: **102 NE 2ND STREET SUITE 510**

CITY / STATE: **BOCA RATON, FL** ZIP CODE: **33432**

TELEPHONE # (**954**) **483-9269**

TOLL FREE # ( )

E-MAIL: **matias@wws-llc.com**

FAX #: ( )

APPLICABLE LICENSE(S) NUMBER # **L14000127855** TYPE: **LIMITED LIABILITY COMPANY**

FEDERAL ID # **47-1877641**

Wastewater Solutions LLC
102 NE 2nd Street Suite 510
Boca Raton, FL 33432 US
(954) 483-9269
arturo@wws-llc.com
wws-llc.com

Quote

ADDRESS
Theresa L. Gonzalez
(561) 584-8200 Ext. 8447
procurement@vpsfl.org

VILLAGE OF PALM SPRINGS

SUBMERSIBLE WASTEWATER

PUMPS, ACCESORIES, AND SERVICE

ITB #2022B-010

QUOTE # 7421
DATE 04/26/2022

DESCRIPTION	QTY	RATE	AMOUNT
BOESCH SUMP PUMP MODEL BC50/3-460 DELIVERY: 2 - 3 WEEKS 1/2 HP 3/60/460V 3450 RPM 2'' NPT VERTICAL DISCHARGE CAST IRON VORTEX IMPELLER STAINLESS STEEL SHAFT CARBON / CERAMIC UPPER MECHANICAL SEAL SILICON CARBIDE / SILICON CARBIDE LOWER MECHANICAL SEAL 30 FT OF POWER CABLE	1	663.00	663.00
BOESCH SUMP PUMP MODEL BC100/3-460 DELIVERY: 2 - 3 WEEKS 1 HP 3/60/460V 3450 RPM 2'' NPT VERTICAL DISCHARGE VORTEX IMPELLER STAINLESS STEEL SHAFT CARBON / CERAMIC UPPER MECHANICAL SEAL SILICON CARBIDE / SILICON CARBIDE LOWER MECHANICAL SEAL 30 FT OF POWER CABLE	1	746.00	746.00

DESCRIPTION	QTY	RATE	AMOUNT
BOESCH SUMP PUMP MODEL BC200/3-460 DELIVERY: 2 - 3 WEEKS 2 HP 3/60/460V 3450 RPM 2" NPT VERTICAL DISCHARGE VORTEX IMPELLER STAINLESS STEEL SHAFT CARBON / CERAMIC UPPER MECHANICAL SEAL SILICON CARBIDE / SILICON CARBIDE LOWER MECHANICAL SEAL 30 FT OF POWER CABLE	1	1,046.00	1,046.00
GUIDE RAIL ASSEMBLY FOR BOESCH BC MODEL SUMP PUMP DELIVERY: 2 - 3 WEEKS INCLUDES: BASE ELBOW FLANGE ADAPTER 316 SS GUIDE RAILS 2" X 20 FT (2) CABLE HOLDER CHAINS AND SHACKLES	1	3,876.00	3,876.00
BOESCH STAINLESS STEEL SUMP PUMP MODEL BT50/3-460 DELIVERY: 2 - 3 WEEKS 1/2 HP 3/60/460V 3450 RPM 2" NPT VERTICAL DISCHARGE 316 SS VORTEX IMPELLER 316 SS SHAFT CARBON / CERAMIC UPPER MECHANICAL SEAL SILICON CARBIDE / SILICON CARBIDE LOWER MECHANICAL SEAL 30 FT OF POWER CABLE	1	1,051.00	1,051.00
BOESCH STAINLESS STEEL SUMP PUMP MODEL BT100/3-460 DELIVERY: 2 - 3 WEEKS 1 HP 3/60/460V 3450 RPM 2" NPT VERTICAL DISCHARGE 316 SS VORTEX IMPELLER 316 SS SHAFT CARBON / CERAMIC UPPER MECHANICAL SEAL SILICON CARBIDE / SILICON CARBIDE LOWER MECHANICAL SEAL 30 FT OF POWER CABLE	1	1,253.00	1,253.00

DESCRIPTION	QTY	RATE	AMOUNT
BOESCH STAINLESS STEEL SUMP PUMP MODEL BT200/3-460 DELIVERY: 2 - 3 WEEKS 2 HP 3/60/460V 3450 RPM 2" NPT VERTICAL DISCHARGE 316 SS VORTEX IMPELLER 316 SS SHAFT CARBON / CERAMIC UPPER MECHANICAL SEAL SILICON CARBIDE / SILICON CARBIDE LOWER MECHANICAL SEAL 30 FT OF POWER CABLE	1	1,718.00	1,718.00
GUIDE RAIL ASSEMBLY FOR BOESCH BT MODEL SUMP PUMP DELIVERY: 2 - 3 WEEKS INCLUDES: BASE ELBOW FLANGE ADAPTER 316 SS GUIDE RAILS 2" X 20 FT (2) CABLE HOLDER CHAINS AND SHACKLES	1	4,251.00	4,251.00
CAPRARI SUBMERSIBLE PUMP MODEL KSW100LD+004061N3 DELIVERY: 12 - 14 WEEKS 5 HP 3/60/460V 1175 RPM 4" DISCHARGE CAST IRON IMPELLER STAINLESS STEEL SHAFT SILICON CARBIDE / CERAMIC MECHANICAL SEAL ON PUMP SIDE CERAMIC / GRAPHITE MECHANICAL SEAL ON MOTOR SIDE KLIXON BIMETALLIC THERMAL PROTECTION 33 FT OF POWER CABLE	1	6,180.00	6,180.00
GUIDE RAIL ASSEMBLY FOR CAPRARI SUBMERSIBLE PUMP DELIVERY: 12 - 14 WEEKS INCLUDES: BASE ELBOW FLANGE ADAPTER 316 SS GUIDE RAILS 2" X 20 FT (2) CABLE HOLDER CHAINS AND SHACKLES	1	3,990.00	3,990.00

DESCRIPTION	QTY	RATE	AMOUNT
CAPRARI SUBMERSIBLE PUMP MODEL KSW100HG+005842N3 DELIVERY: 12 - 14 WEEKS 8 HP 3/60/460V 1760 RPM 4” DISCHARGE CAST IRON IMPELLER STAINLESS STEEL SHAFT SILICON CARBIDE / CERAMIC MECHANICAL SEAL ON PUMP SIDE CERAMIC / GRAPHITE MECHANICAL SEAL ON MOTOR SIDE KLIXON BIMETALLIC THERMAL PROTECTION 33 FT OF POWER CABLE	1	5,639.00	5,639.00
GUIDE RAIL ASSEMBLY FOR CAPRARI SUBMERSIBLE PUMP DELIVERY: 12 - 14 WEEKS INCLUDES: BASE ELBOW FLANGE ADAPTER 316 SS GUIDE RAILS 2” X 20 FT (2) CABLE HOLDER CHAINS AND SHACKLES	1	3,990.00	3,990.00
CAPRARI SUBMERSIBLE PUMP MODEL KSW100LE+012542N3 DELIVERY: 14 - 16 WEEKS 17 HP 3/60/460V 1760 RPM 4” DISCHARGE CAST IRON IMPELLER STAINLESS STEEL SHAFT SILICON CARBIDE / CERAMIC MECHANICAL SEAL ON PUMP SIDE CERAMIC / GRAPHITE MECHANICAL SEAL ON MOTOR SIDE KLIXON BIMETALLIC THERMAL PROTECTION 33 FT OF POWER CABLE	1	7,657.00	7,657.00
GUIDE RAIL ASSEMBLY FOR CAPRARI SUBMERSIBLE PUMP DELIVERY: 14 - 16 WEEKS INCLUDES: BASE ELBOW FLANGE ADAPTER 316 SS GUIDE RAILS 2” X 20 FT (2) CABLE HOLDER CHAINS AND SHACKLES	1	3,990.00	3,990.00

DESCRIPTION	QTY	RATE	AMOUNT
CAPRARI SUBMERSIBLE PUMP MODEL KSM150NA+015062N3 DELIVERY: 14 - 16 WEEKS 20 HP 3/60/460V 1760 RPM 6” DISCHARGE CAST IRON IMPELLER STAINLESS STEEL SHAFT SILICON CARBIDE / CERAMIC MECHANICAL SEAL ON PUMP SIDE CERAMIC / GRAPHITE MECHANICAL SEAL ON MOTOR SIDE KLIXON BIMETALLIC THERMAL PROTECTION 33 FT OF POWER CABLE	1	11,407.00	11,407.00
GUIDE RAIL ASSEMBLY FOR CAPRARI SUBMERSIBLE PUMP DELIVERY: 14 - 16 WEEKS INCLUDES: BASE ELBOW FLANGE ADAPTER 316 SS GUIDE RAILS 2” X 20 FT (2) CABLE HOLDER CHAINS AND SHACKLES	1	4,833.00	4,833.00
CAPRARI SUBMERSIBLE PUMP MODEL KSM100NG+023042N3 DELIVERY: 16 - 18 WEEKS 31 HP 3/60/460V 1780 RPM 4” DISCHARGE CAST IRON IMPELLER STAINLESS STEEL SHAFT SILICON CARBIDE / CERAMIC MECHANICAL SEAL ON PUMP SIDE CERAMIC / GRAPHITE MECHANICAL SEAL ON MOTOR SIDE KLIXON BIMETALLIC THERMAL PROTECTION 33 FT OF POWER CABLE	1	13,554.00	13,554.00
GUIDE RAIL ASSEMBLY FOR CAPRARI SUBMERSIBLE PUMP DELIVERY: 16 - 18 WEEKS INCLUDES: BASE ELBOW FLANGE ADAPTER 316 SS GUIDE RAILS 2” X 20 FT (2) CABLE HOLDER CHAINS AND SHACKLES	1	3,978.00	3,978.00

DESCRIPTION	QTY	RATE	AMOUNT
CAPRARI SUBMERSIBLE PUMP MODEL KSM150RA+034062N1 DELIVERY: 16 - 18 WEEKS 45 HP 3/60/460V 1175 RPM 6” DISCHARGE CAST IRON IMPELLER STAINLESS STEEL SHAFT SILICON CARBIDE / SILICON CARBIDE MECHANICAL SEAL ON PUMP SIDE STAINLESS STEEL / GRAPHITE MECHANICAL SEAL ON MOTOR SIDE KLIXON BIMETALLIC THERMAL PROTECTION 33 FT OF POWER CABLE	1	24,610.00	24,610.00
GUIDE RAIL ASSEMBLY FOR CAPRARI SUBMERSIBLE PUMP DELIVERY: 16 - 18 WEEKS INCLUDES: BASE ELBOW FLANGE ADAPTER 316 SS GUIDE RAILS 2” X 20 FT (2) CABLE HOLDER CHAINS AND SHACKLES	1	4,633.00	4,633.00
CAPRARI SUBMERSIBLE PUMP MODEL KSM250ZA+034082N1 DELIVERY: 16 - 18 WEEKS 45 HP 3/60/460V 880 RPM 10” DISCHARGE CAST IRON IMPELLER STAINLESS STEEL SHAFT SILICON CARBIDE / SILICON CARBIDE MECHANICAL SEAL ON PUMP SIDE STAINLESS STEEL / GRAPHITE MECHANICAL SEAL ON MOTOR SIDE KLIXON BIMETALLIC THERMAL PROTECTION 33 FT OF POWER CABLE	1	32,943.00	32,943.00
GUIDE RAIL ASSEMBLY FOR CAPRARI SUBMERSIBLE PUMP DELIVERY: 16 - 18 WEEKS INCLUDES: BASE ELBOW FLANGE ADAPTER 316 SS GUIDE RAILS 2” X 20 FT (2) CABLE HOLDER CHAINS AND SHACKLES	1	6,169.00	6,169.00

DESCRIPTION	QTY	RATE	AMOUNT
SEE ATTACHED SCOPE AND SPECIFICATIONS. A FORMAL SET OF SUBMITTALS WILL BE PROVIDED AFTER INTENT TO AWARD IS RECEIVED. WARRANTY: 12 MONTHS FROM THE DATE OF STARTUP OR 18 MONTHS FROM THE DATE OF SHIPMENT. WHICHEVER OCCURS FIRST. DELIVERY INCLUDED AS PER SPECIFICATIONS			

VILLAGE OF PALM SPRINGS
SUBMERSIBLE WASTEWATER PUMPS, ACCESORIES, AND SERVICE
ITB #2022B-010

SUBTOTAL	148,177.00
TOTAL	**$148,177.00**

WASTEWATER SOLUTIONS LLC
CAGE CODE: 7TWY1
DUNS NUMBER: 079918568
EIN: 47-1877641

Accepted By

Accepted Date

BOESCH SUMP PUMP MODEL BC50/3-460



WASTEWATER SOLUTIONS LLC

Arturo Garcia
102 NE 2nd Street, Suite 510
Boca Raton FL 33432
(954) 483 9269
arturo@wws-llc.com

BOESCH

60HZ
BC SERIES

MOTOR / PUMP SPECIFICATIONS

ITEM		DESCRIPTION
LIMITS	Liquid Temp	0~40°C
	Application	Commercial / Industrial / Municipal use
TYPE	Frequency	60Hz
	Motor	2P (3450RPM) Dry Motor
	Insulation	Class B
	Start Method	Direct On Line
	Protection	IP 68
	Protector	Auto-Cut
	Bearing	Ball Type
	Mech. Seal	Dual. Mechanical Seal
	Impeller	Vortex Impeller
MATERIAL	Motor Cover	0.5~1HP:PA66+30GF; 1.5~2HP: ASTM A48 Class 30
	Motor Housing+Stator	AISI 304
	Shaft with Rotor	AISI 410
	Mech. Seal	Upper: CA/CE; Lower: SIC/SIC
	Pump Casing	ASTM A48 Class 30
	Impeller	ASTM A48 Class 30
	Cable	H07RN-F / SJTOW / STOW



MOTOR / PUMP DATA CHART

MODEL	OUTPUT		DISCHARGE	PHASE	1Ø			FREE PASSAGE	WEIGHT W/O CABLE
	HP	KW	INCHES	VOLTAGE	115V	208V	230V	INCHES	LBS
BC50/1	0.5	0.37	2	FULL LOAD AMPS	9A	5A	4.5A	2	29
BC75/1	0.75	0.55	2		11A	6A	5.5A	2	31
BC100/1	1	0.75	2		14A	7.7A	7A	2	34
BC150/1	1.5	1.1	2		18.6A	10.3A	9.3A	2	53
BC200/1	2	1.5	2		-	11.6	10.5A	2	55

MODEL	OUTPUT		DISCHARGE	PHASE	3Ø			FREE PASSAGE	WEIGHT W/O CABLE
	HP	KW	INCHES	VOLTAGE	208V	230V	460V	INCHES	LBS
BC50/3	0.5	0.37	2	FULL LOAD AMPS	3.3A	3A	1.5A	2	29
BC75/3	0.75	0.55	2		4A	3.6A	1.8A	2	31
BC100/3	1	0.75	2		5.6A	5A	2.5A	2	34
BC150/3	1.5	1.1	2		6.9A	6.2A	3.1A	2	53
BC200/3	2	1.5	2		7.7A	7A	3.5A	2	55

MOTOR / PUMP CONSTRUCTION MATERIAL

PART	MATERIAL
Cable	H07RN-F/STJOW/STOW
Handle	Nylon 6
Motor Cover	PA66+30GF (0.5~1HP)
Motor Cover	ASTM A48 Class 30 (1.5~2HP)
Bracket	ASTM A48 Class 30
Motor Housing + Stator	AISI 304
Shaft with Rotor	AISI 410
Oil Chamber	ASTM A48 Class 30

PART	MATERIAL
Mechanical Seal	Upper: CA / CE
Mechanical Seal	Lower: SIC / SIC
Seal Housing	ASTM A48 Class 30
Lip Seal	BUNA N
Impeller	ASTM A48 Class 30
Pump Casing	ASTM A48 Class 30
Upper Bearing	NTN/TPI

BOESCH BC50

FILE NO. BC001

PUMP PERFORMANCE REPORT

MODEL	BC50		RATED
FREQUENCY	60 HZ	HEAD	21 ft / 6.4 m
DISCHARGE	2 inches / 50 mm	CAPACITY	50 gpm / 189 lpm
OUTPUT	0.5 hp / 0.37 kW	POLE / RPM	2 poles / 3450 rpm

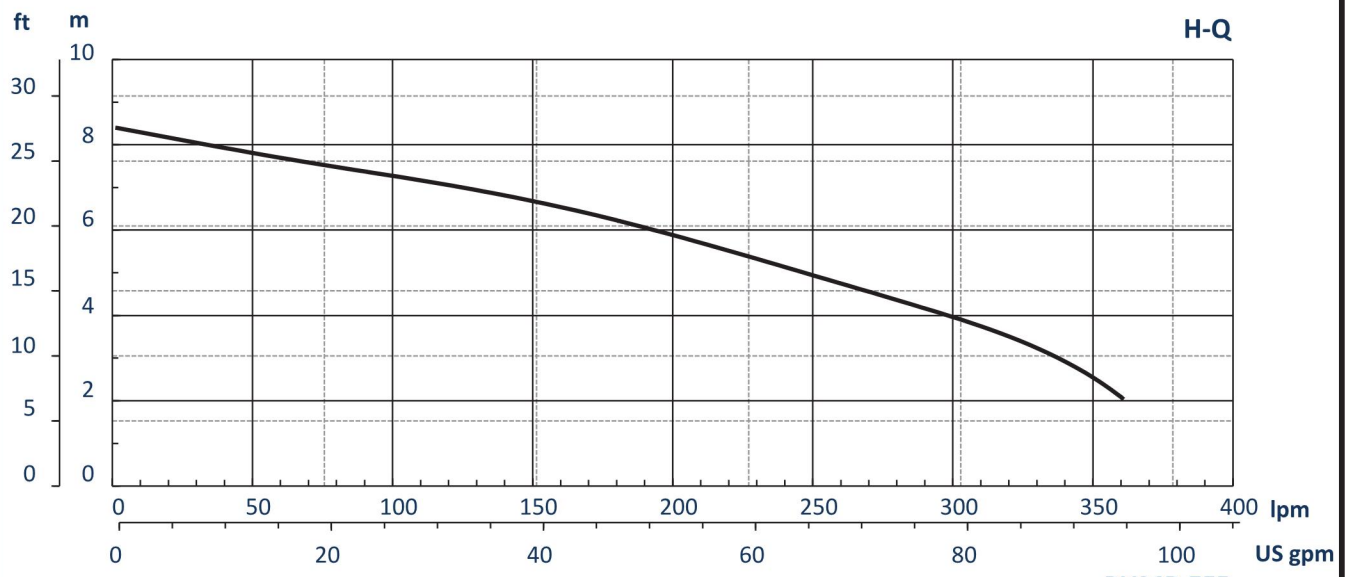

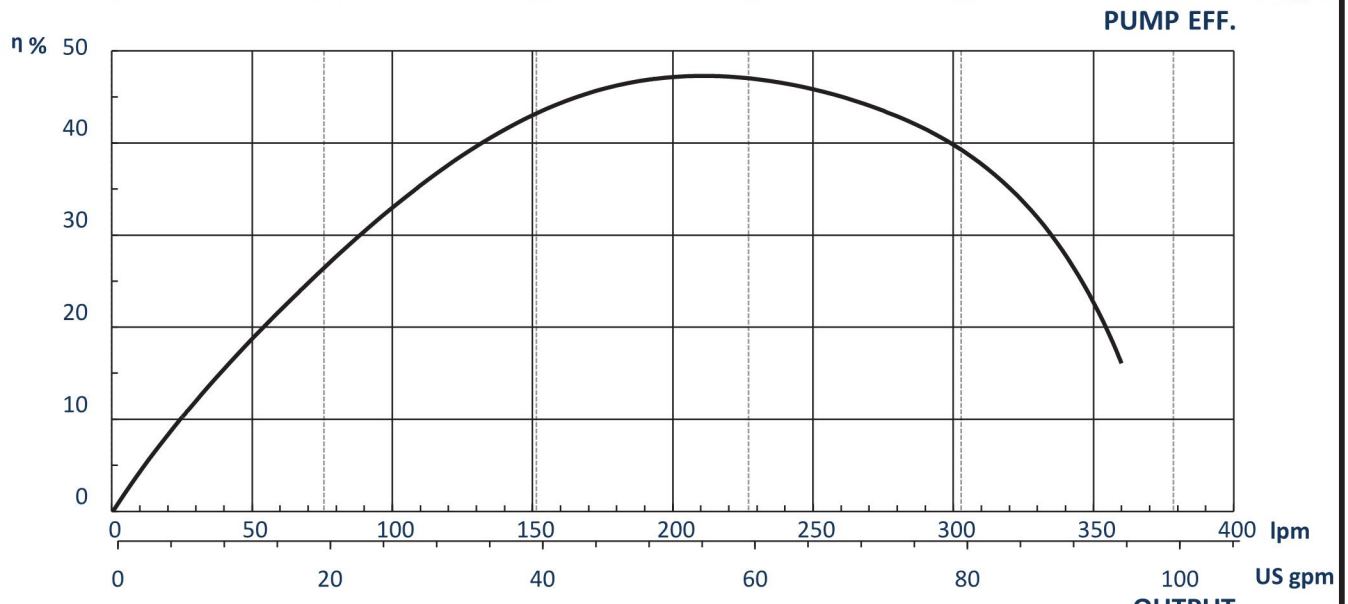

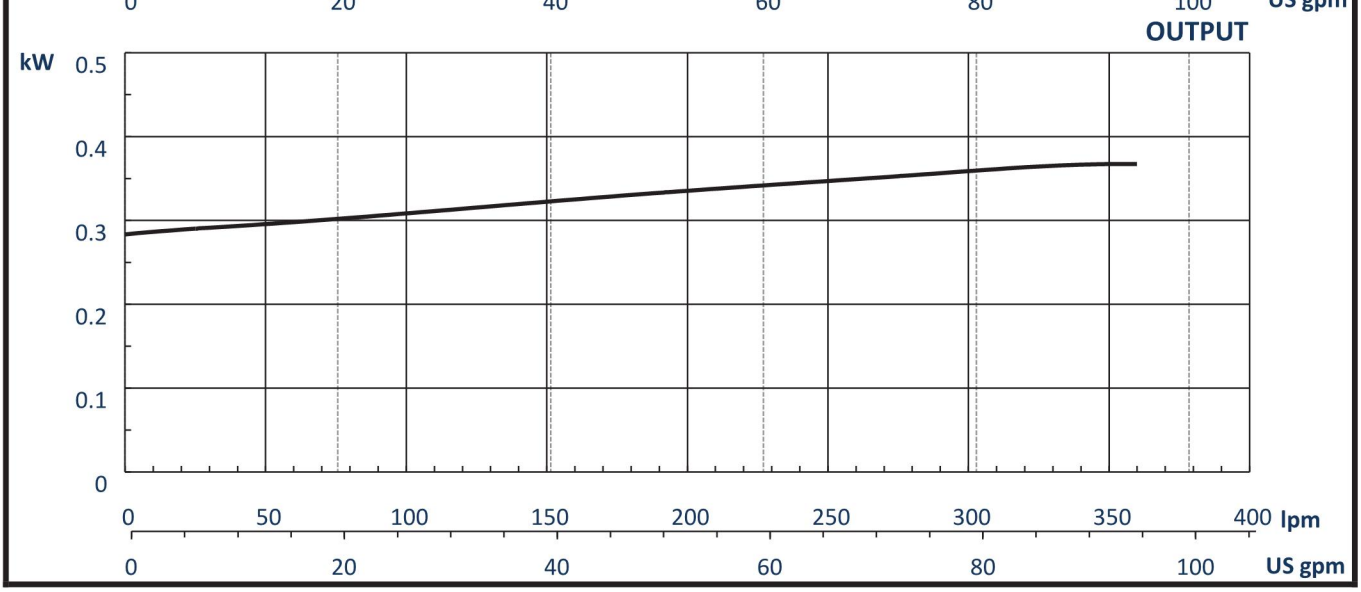

BOESCH

60HZ
BC SERIES

DIMENSIONAL DRAWING

MODELS: BC50 - BC200 (0.5 - 2HP) THREADED DISCHARGE

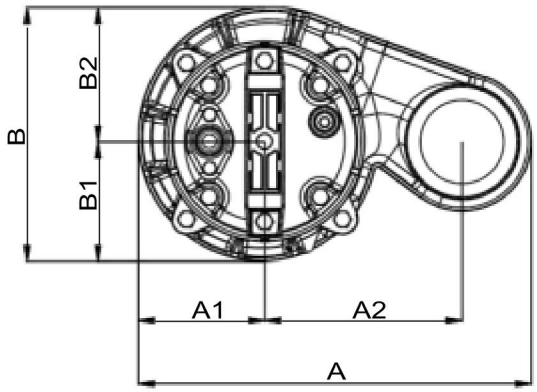

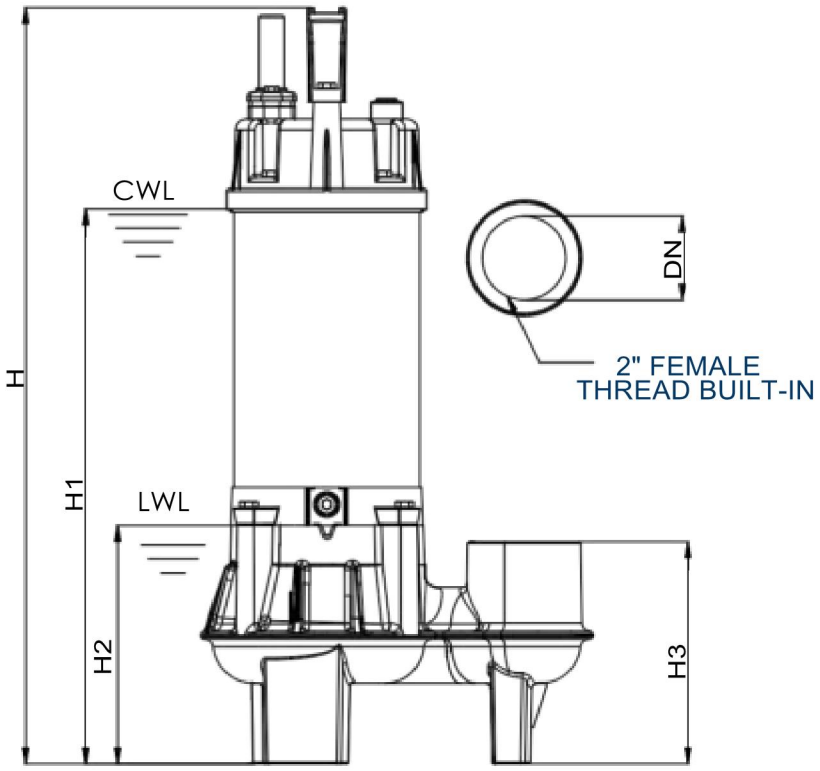

DIMENSIONS: INCHES
WEIGHT: LBS
PIPE CONNECTION TYPE: NPT

MODEL	A	A1	A2	B	B1	B2	DN	H	H1	H2	H3	WT
BC50	10.24	3.50	4.92	6.70	3.54	3.15	2	18.35	13.23	5.94	5.55	28.40
BC75	10.24	3.50	4.92	6.70	3.54	3.15	2	18.98	13.86	5.94	5.55	30.60
BC100	10.24	3.50	4.92	6.70	3.54	3.15	2	19.53	14.41	5.94	5.55	34.00
BC150	10.71	3.66	5.12	7.36	3.43	3.94	2	19.92	14.80	5.94	5.63	53.24
BC200	10.71	3.66	5.12	7.36	3.43	3.94	2	20.47	15.59	5.94	5.63	55.44

CWL: CONTINOUS RUNNING WATER LEVEL
LWL: LOWEST RUNNING WATER LEVEL
WT: WEIGHT WITHOUT CABLE

BOESCH SUMP PUMP MODEL BC100/3-460



WASTEWATER SOLUTIONS LLC

Arturo Garcia
102 NE 2nd Street, Suite 510
Boca Raton FL 33432
(954) 483 9269
arturo@wws-llc.com

BOESCH

60HZ
BC SERIES

MOTOR / PUMP SPECIFICATIONS

ITEM		DESCRIPTION
LIMITS	Liquid Temp	0~40°C
	Application	Commercial / Industrial / Municipal use
TYPE	Frequency	60Hz
	Motor	2P (3450RPM) Dry Motor
	Insulation	Class B
	Start Method	Direct On Line
	Protection	IP 68
	Protector	Auto-Cut
	Bearing	Ball Type
	Mech. Seal	Dual. Mechanical Seal
	Impeller	Vortex Impeller
MATERIAL	Motor Cover	0.5~1HP:PA66+30GF; 1.5~2HP: ASTM A48 Class 30
	Motor Housing+Stator	AISI 304
	Shaft with Rotor	AISI 410
	Mech. Seal	Upper: CA/CE; Lower: SIC/SIC
	Pump Casing	ASTM A48 Class 30
	Impeller	ASTM A48 Class 30
	Cable	H07RN-F / SJTOW / STOW



MOTOR / PUMP DATA CHART

MODEL	OUTPUT		DISCHARGE	PHASE	1Ø			FREE PASSAGE	WEIGHT W/O CABLE
	HP	KW	INCHES	VOLTAGE	115V	208V	230V	INCHES	LBS
BC50/1	0.5	0.37	2	FULL LOAD AMPS	9A	5A	4.5A	2	29
BC75/1	0.75	0.55	2		11A	6A	5.5A	2	31
BC100/1	1	0.75	2		14A	7.7A	7A	2	34
BC150/1	1.5	1.1	2		18.6A	10.3A	9.3A	2	53
BC200/1	2	1.5	2		-	11.6	10.5A	2	55

MODEL	OUTPUT		DISCHARGE	PHASE	3Ø			FREE PASSAGE	WEIGHT W/O CABLE
	HP	KW	INCHES	VOLTAGE	208V	230V	460V	INCHES	LBS
BC50/3	0.5	0.37	2	FULL LOAD AMPS	3.3A	3A	1.5A	2	29
BC75/3	0.75	0.55	2		4A	3.6A	1.8A	2	31
BC100/3	1	0.75	2		5.6A	5A	2.5A	2	34
BC150/3	1.5	1.1	2		6.9A	6.2A	3.1A	2	53
BC200/3	2	1.5	2		7.7A	7A	3.5A	2	55

MOTOR / PUMP CONSTRUCTION MATERIAL

PART	MATERIAL
Cable	H07RN-F/STJOW/STOW
Handle	Nylon 6
Motor Cover	PA66+30GF (0.5~1HP)
Motor Cover	ASTM A48 Class 30 (1.5~2HP)
Bracket	ASTM A48 Class 30
Motor Housing + Stator	AISI 304
Shaft with Rotor	AISI 410
Oil Chamber	ASTM A48 Class 30

PART	MATERIAL
Mechanical Seal	Upper: CA / CE
Mechanical Seal	Lower: SIC / SIC
Seal Housing	ASTM A48 Class 30
Lip Seal	BUNA N
Impeller	ASTM A48 Class 30
Pump Casing	ASTM A48 Class 30
Upper Bearing	NTN/TPI

BOESCH BC100

FILE NO. BC002

PUMP PERFORMANCE REPORT

MODEL	BC100		RATED
FREQUENCY	60 HZ	HEAD	20 ft / 6 m
DISCHARGE	2 inches / 50 mm	CAPACITY	100 gpm / 378 lpm
OUTPUT	1 hp / 0.75 kW	POLE / RPM	2 poles / 3450 rpm

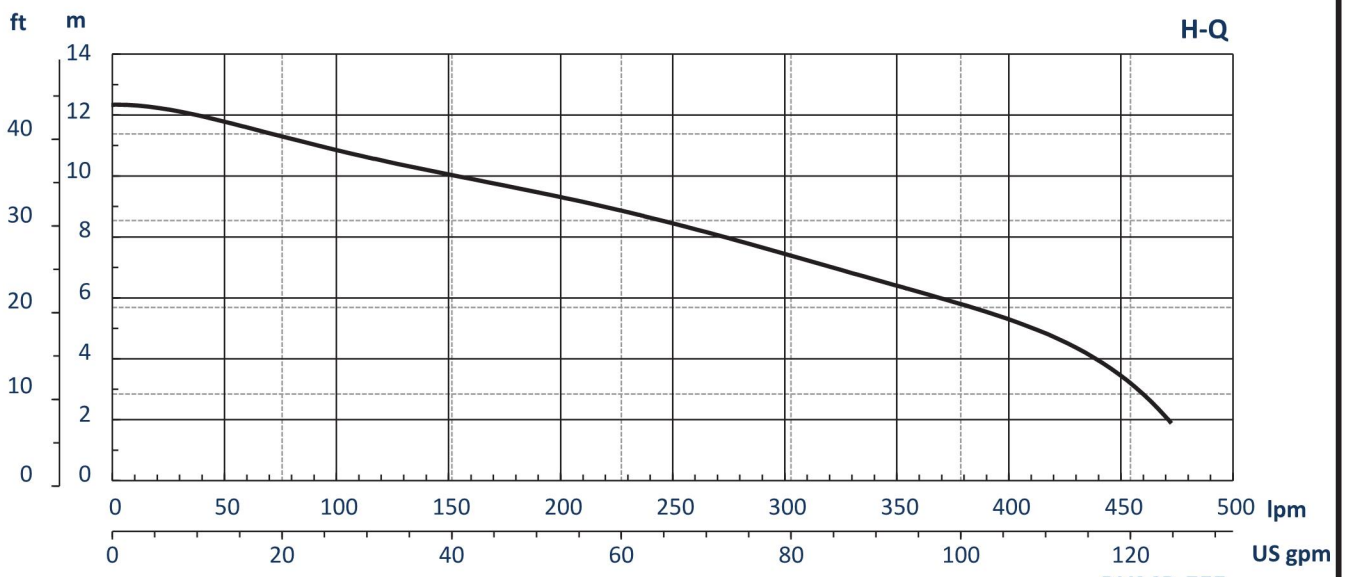

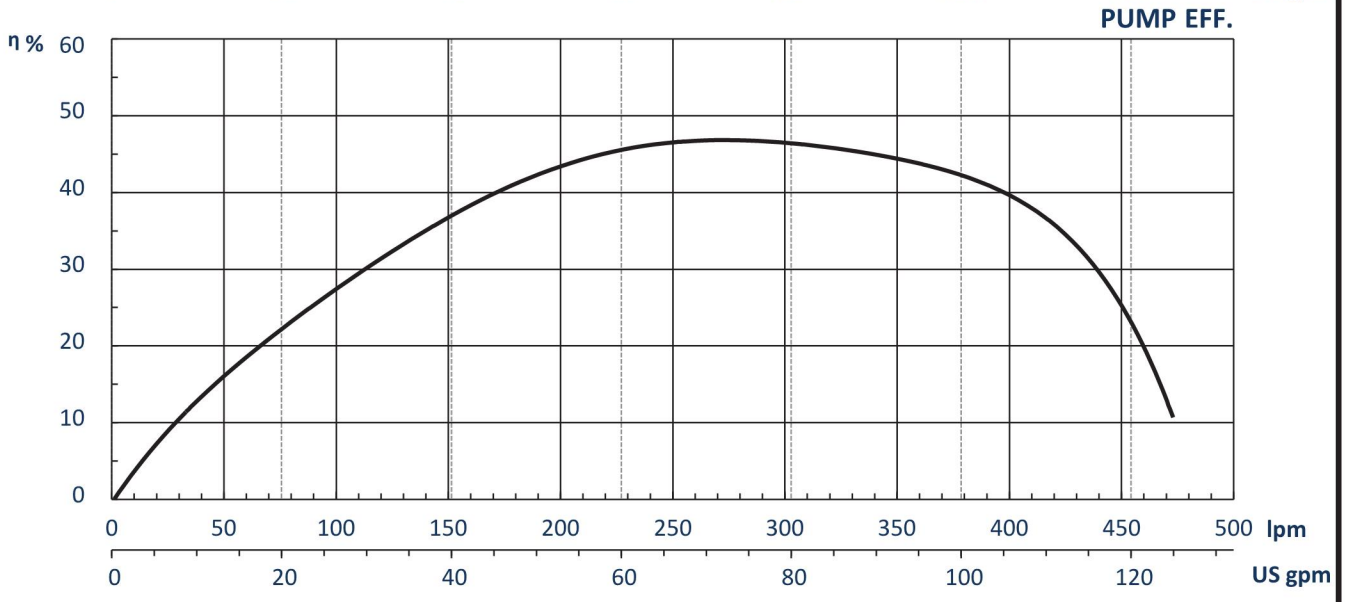

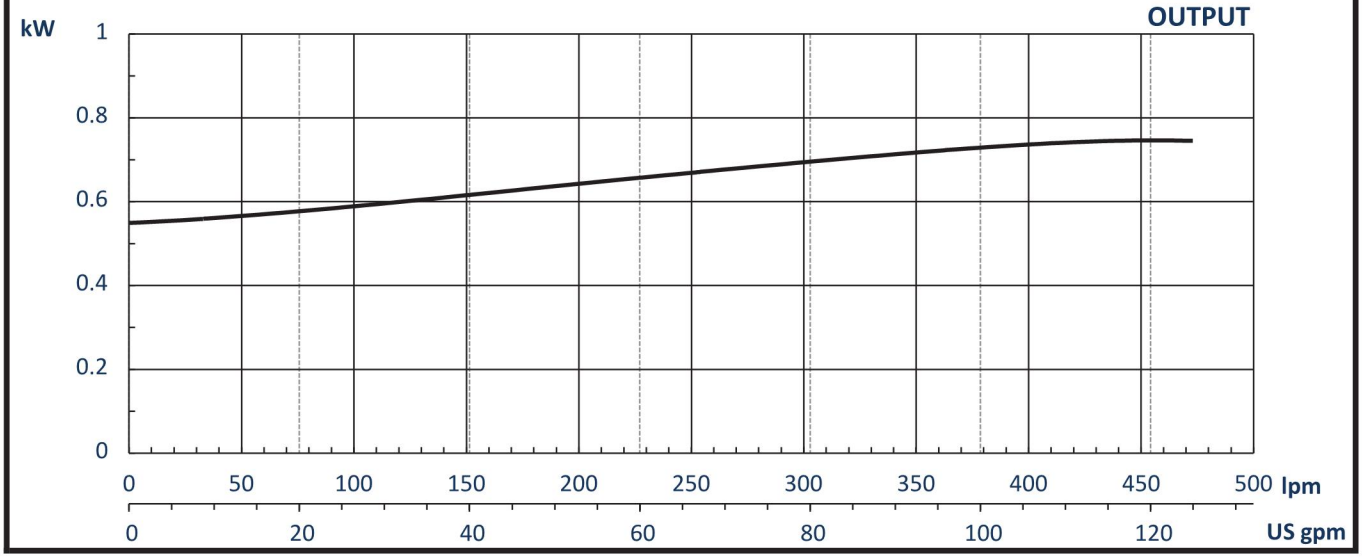

BOESCH

60HZ
BC SERIES

DIMENSIONAL DRAWING

MODELS: BC50 - BC200 (0.5 - 2HP) THREADED DISCHARGE

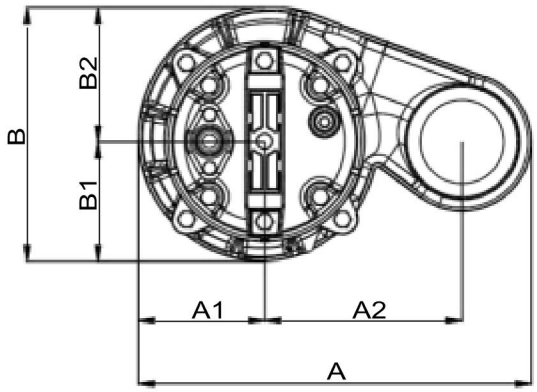

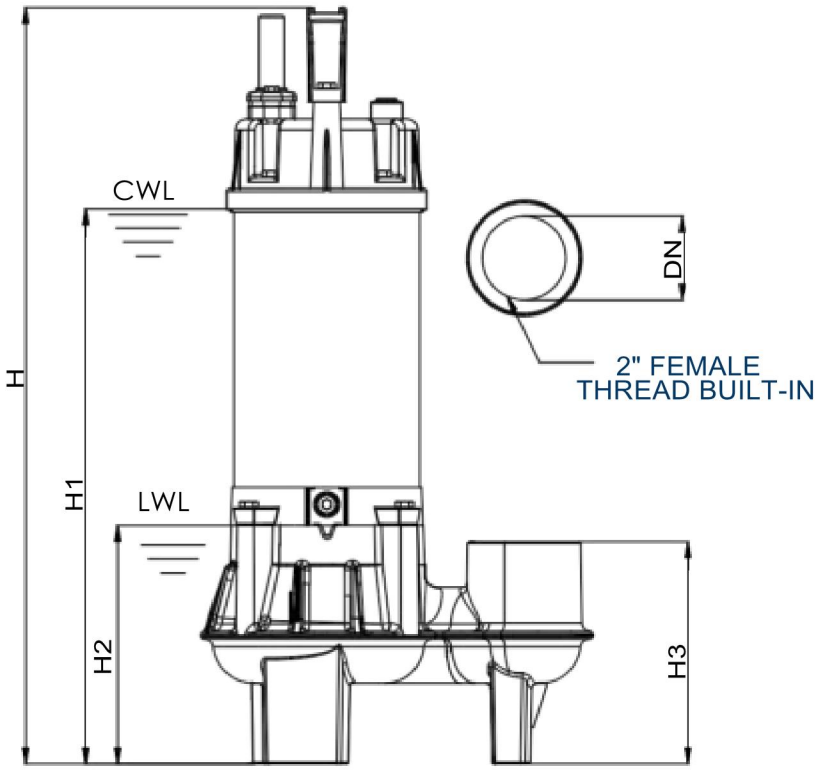

DIMENSIONS: INCHES
WEIGHT: LBS
PIPE CONNECTION TYPE: NPT

MODEL	A	A1	A2	B	B1	B2	DN	H	H1	H2	H3	WT
BC50	10.24	3.50	4.92	6.70	3.54	3.15	2	18.35	13.23	5.94	5.55	28.40
BC75	10.24	3.50	4.92	6.70	3.54	3.15	2	18.98	13.86	5.94	5.55	30.60
BC100	10.24	3.50	4.92	6.70	3.54	3.15	2	19.53	14.41	5.94	5.55	34.00
BC150	10.71	3.66	5.12	7.36	3.43	3.94	2	19.92	14.80	5.94	5.63	53.24
BC200	10.71	3.66	5.12	7.36	3.43	3.94	2	20.47	15.59	5.94	5.63	55.44

CWL: CONTINOUS RUNNING WATER LEVEL
LWL: LOWEST RUNNING WATER LEVEL
WT: WEIGHT WITHOUT CABLE

BOESCH SUMP PUMP MODEL BC200/3-460



WASTEWATER SOLUTIONS LLC

Arturo Garcia
102 NE 2nd Street, Suite 510
Boca Raton FL 33432
(954) 483 9269
arturo@wws-llc.com

BOESCH

60HZ
BC SERIES

MOTOR / PUMP SPECIFICATIONS

ITEM		DESCRIPTION
LIMITS	Liquid Temp	0~40°C
	Application	Commercial / Industrial / Municipal use
TYPE	Frequency	60Hz
	Motor	2P (3450RPM) Dry Motor
	Insulation	Class B
	Start Method	Direct On Line
	Protection	IP 68
	Protector	Auto-Cut
	Bearing	Ball Type
	Mech. Seal	Dual. Mechanical Seal
	Impeller	Vortex Impeller
MATERIAL	Motor Cover	0.5~1HP:PA66+30GF; 1.5~2HP: ASTM A48 Class 30
	Motor Housing+Stator	AISI 304
	Shaft with Rotor	AISI 410
	Mech. Seal	Upper: CA/CE; Lower: SIC/SIC
	Pump Casing	ASTM A48 Class 30
	Impeller	ASTM A48 Class 30
	Cable	H07RN-F / SJTOW / STOW



MOTOR / PUMP DATA CHART

MODEL	OUTPUT		DISCHARGE	PHASE	1Ø			FREE PASSAGE	WEIGHT W/O CABLE
	HP	KW	INCHES	VOLTAGE	115V	208V	230V	INCHES	LBS
BC50/1	0.5	0.37	2	FULL LOAD AMPS	9A	5A	4.5A	2	29
BC75/1	0.75	0.55	2		11A	6A	5.5A	2	31
BC100/1	1	0.75	2		14A	7.7A	7A	2	34
BC150/1	1.5	1.1	2		18.6A	10.3A	9.3A	2	53
BC200/1	2	1.5	2		-	11.6	10.5A	2	55

MODEL	OUTPUT		DISCHARGE	PHASE	3Ø			FREE PASSAGE	WEIGHT W/O CABLE
	HP	KW	INCHES	VOLTAGE	208V	230V	460V	INCHES	LBS
BC50/3	0.5	0.37	2	FULL LOAD AMPS	3.3A	3A	1.5A	2	29
BC75/3	0.75	0.55	2		4A	3.6A	1.8A	2	31
BC100/3	1	0.75	2		5.6A	5A	2.5A	2	34
BC150/3	1.5	1.1	2		6.9A	6.2A	3.1A	2	53
BC200/3	2	1.5	2		7.7A	7A	3.5A	2	55

MOTOR / PUMP CONSTRUCTION MATERIAL

PART	MATERIAL
Cable	H07RN-F/STJOW/STOW
Handle	Nylon 6
Motor Cover	PA66+30GF (0.5~1HP)
Motor Cover	ASTM A48 Class 30 (1.5~2HP)
Bracket	ASTM A48 Class 30
Motor Housing + Stator	AISI 304
Shaft with Rotor	AISI 410
Oil Chamber	ASTM A48 Class 30

PART	MATERIAL
Mechanical Seal	Upper: CA / CE
Mechanical Seal	Lower: SIC / SIC
Seal Housing	ASTM A48 Class 30
Lip Seal	BUNA N
Impeller	ASTM A48 Class 30
Pump Casing	ASTM A48 Class 30
Upper Bearing	NTN/TPI

BOESCH **BC200**

FILE NO. BC003

PUMP PERFORMANCE REPORT

MODEL	BC200		RATED
FREQUENCY	60 HZ	HEAD	40 ft / 12 m
DISCHARGE	2 inches / 50 mm	CAPACITY	100 gpm / 378 lpm
OUTPUT	2 hp / 1.5 kW	POLE / RPM	2 poles / 3450 rpm

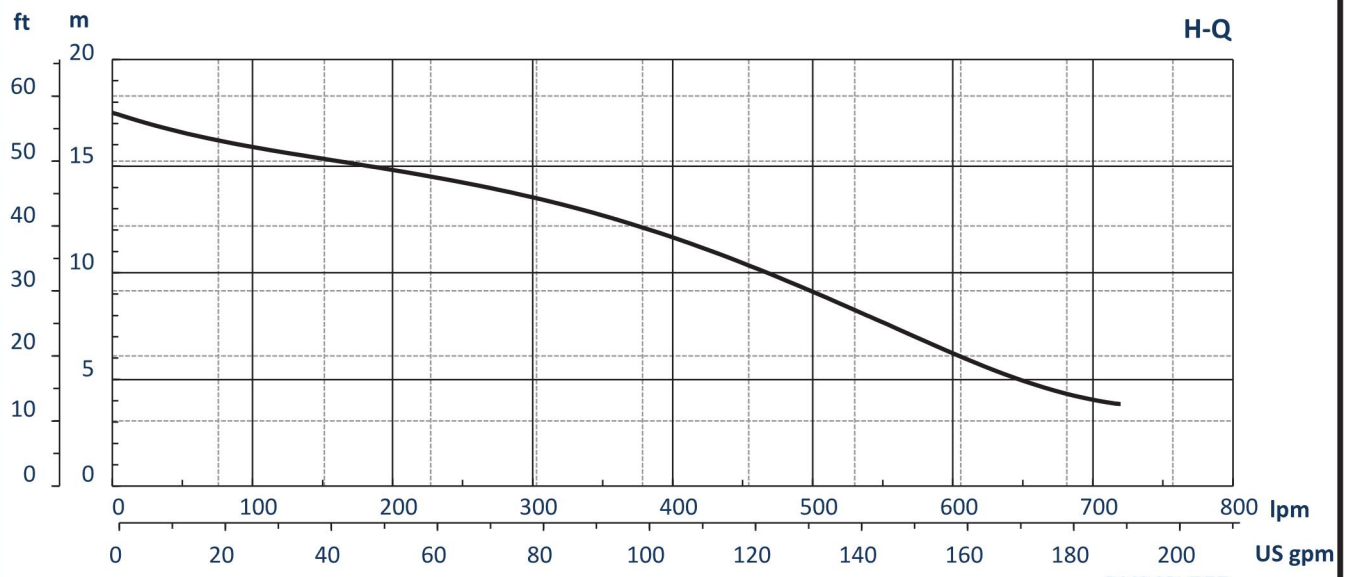

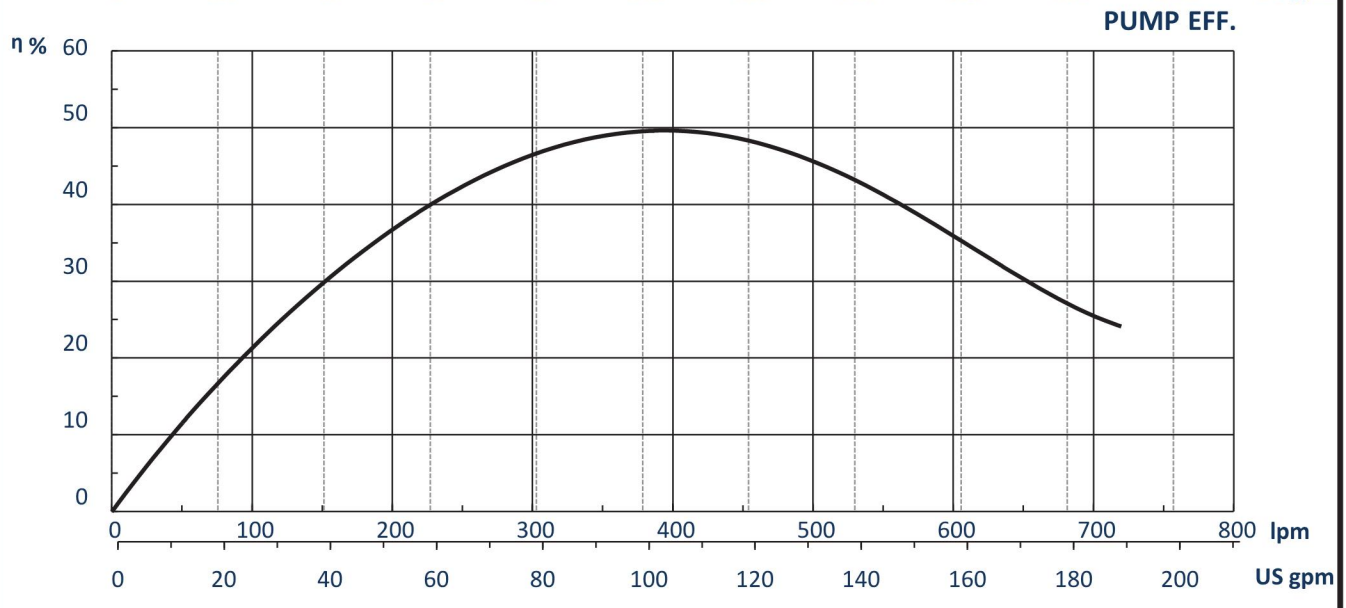

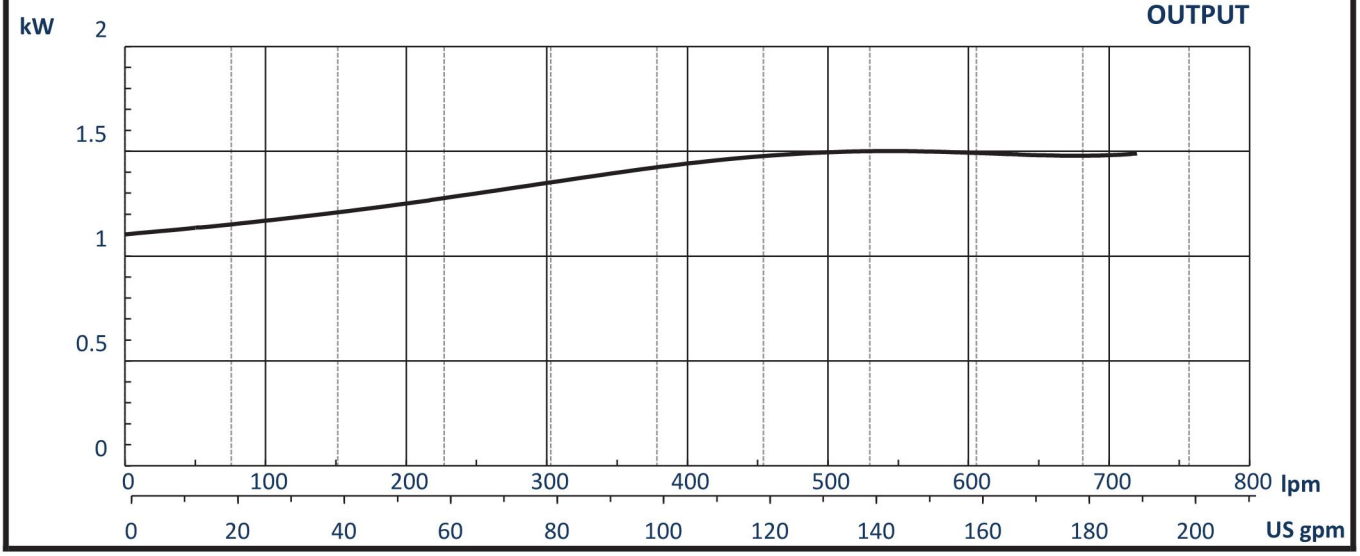

BOESCH

60HZ
BC SERIES

DIMENSIONAL DRAWING

MODELS: BC50 - BC200 (0.5 - 2HP) THREADED DISCHARGE

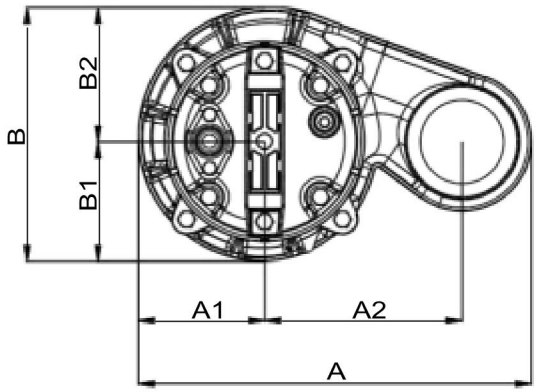

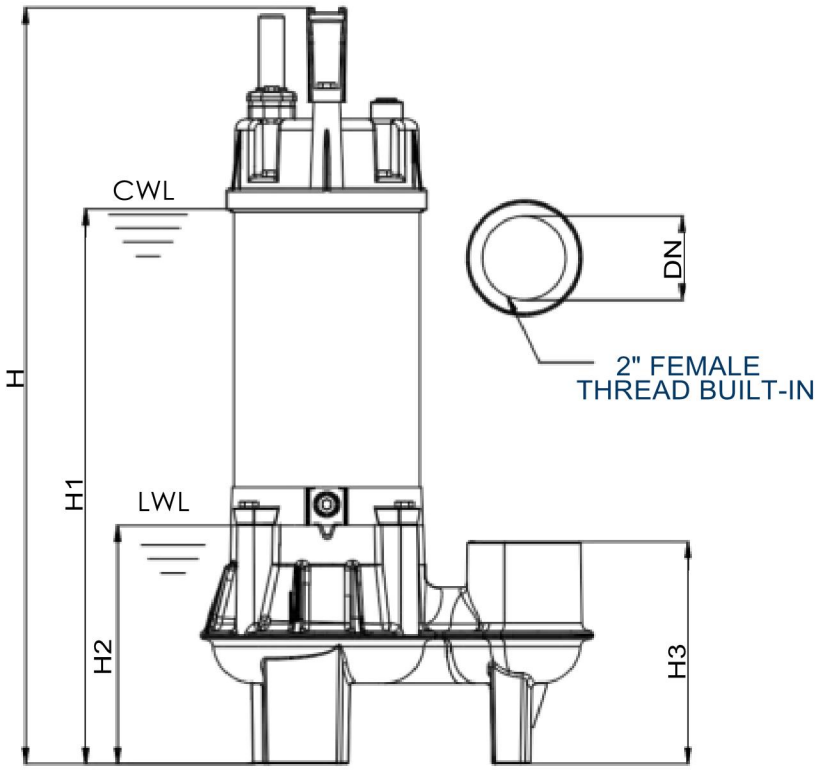

DIMENSIONS: INCHES
WEIGHT: LBS
PIPE CONNECTION TYPE: NPT

MODEL	A	A1	A2	B	B1	B2	DN	H	H1	H2	H3	WT
BC50	10.24	3.50	4.92	6.70	3.54	3.15	2	18.35	13.23	5.94	5.55	28.40
BC75	10.24	3.50	4.92	6.70	3.54	3.15	2	18.98	13.86	5.94	5.55	30.60
BC100	10.24	3.50	4.92	6.70	3.54	3.15	2	19.53	14.41	5.94	5.55	34.00
BC150	10.71	3.66	5.12	7.36	3.43	3.94	2	19.92	14.80	5.94	5.63	53.24
BC200	10.71	3.66	5.12	7.36	3.43	3.94	2	20.47	15.59	5.94	5.63	55.44

CWL: CONTINOUS RUNNING WATER LEVEL
LWL: LOWEST RUNNING WATER LEVEL
WT: WEIGHT WITHOUT CABLE

BOESCH SUMP PUMP MODEL BT50/3-460



WASTEWATER SOLUTIONS LLC

Arturo Garcia
102 NE 2nd Street, Suite 510
Boca Raton FL 33432
(954) 483 9269
arturo@wws-llc.com

BOESCH

60HZ
BT SERIES

MOTOR / PUMP SPECIFICATIONS

ITEM		DESCRIPTION
LIMITS	Liquid Temp	0~40°C
	Application	Commercial / Industrial / Municipal use
TYPE	Frequency	60Hz
	Motor	2P (3450RPM) Dry Motor
	Insulation	Class B
	Start Method	Direct On Line
	Protection	IP 68
	Protector	Auto-Cut
	Bearing	Ball Type
	Mech. Seal	Dual. Mechanical Seal
	Impeller	Vortex Impeller
MATERIAL	Motor Cover	AISI 316
	Motor Housing+Stator	AISI 316
	Shaft with Rotor	AISI 316
	Mech. Seal	Upper: CA/CE; Lower: SIC/SIC
	Pump Casing	AISI 316
	Impeller	AISI 316
	Cable	H07RN-F / SJTOW / STOW



MOTOR / PUMP DATA CHART

MODEL	OUTPUT		DISCHARGE	PHASE	1Ø			FREE PASSAGE	WEIGHT W/O CABLE
	HP	KW	INCHES	VOLTAGE	115V	208V	230V	INCHES	LBS
BT50/1	0.5	0.37	2	FULL LOAD AMPS	8A	4.4A	4A	1.4	29
BT100/1	1	0.75	2		12A	6.6A	6A	1.4	35
BT200/1	2	1.5	2 (3)		-	12.2A	11A	1.8	69
BT300/1	3	2.2	2 (3)		-	12.2A	11A	1.8	72

MODEL	OUTPUT		DISCHARGE	PHASE	3Ø			FREE PASSAGE	WEIGHT W/O CABLE
	HP	KW	INCHES	VOLTAGE	208V	230V	460V	INCHES	LBS
BT50/3	0.5	0.37	2	FULL LOAD AMPS	3.1A	2.8A	1.4A	1.4	28
BT100/3	1	0.75	2		4.4A	4A	2A	1.4	35
BT200/3	2	1.5	2 (3)		7.7A	7A	3.5A	1.8	65
BT300/3	3	2.2	2 (3)		8.8A	8A	4.5A	1.8	69
BT500/3	4	3.7	3 (4)		16.6A	15A	8A	1.8	106
BT750/3	5	5.5	3 (4)		23.2A	21A	10.5A	1.8	119

MOTOR / PUMP CONSTRUCTION MATERIAL

PART	MATERIAL	PART	MATERIAL
Cable	H07RN-F/STJOW/STOW	Mechanical Seal	Upper: CA / CE
Handle	Nylon 6(0.5-1HP) AISI 316 (2-7.5HP)	Mechanical Seal	Lower: SIC / SIC
Motor Cover	AISI 316	Seal Housing	AISI 316
Bracket	ASTM A48 Class 30	Lip Seal	VITON
Motor Housing + Stator	AISI 316	Impeller	AISI 316
Shaft with Rotor	AISI 316	Pump Casing	AISI 316
Oil Chamber	ASTM A48 Class 30(0.5-1HP) AISI 316(2-7.5HP)	Upper/Lower Bearing	NTN/TPI

BOESCH **BT50**

FILE NO. BT001

PUMP PERFORMANCE REPORT

MODEL	BT50		RATED
FREQUENCY	60 HZ	HEAD	22 ft / 6.7 m
DISCHARGE	2 inches / 50 mm	CAPACITY	50 gpm / 189 lpm
OUTPUT	0.5 hp / 0.37 kW	POLE / RPM	2 poles / 3450 rpm

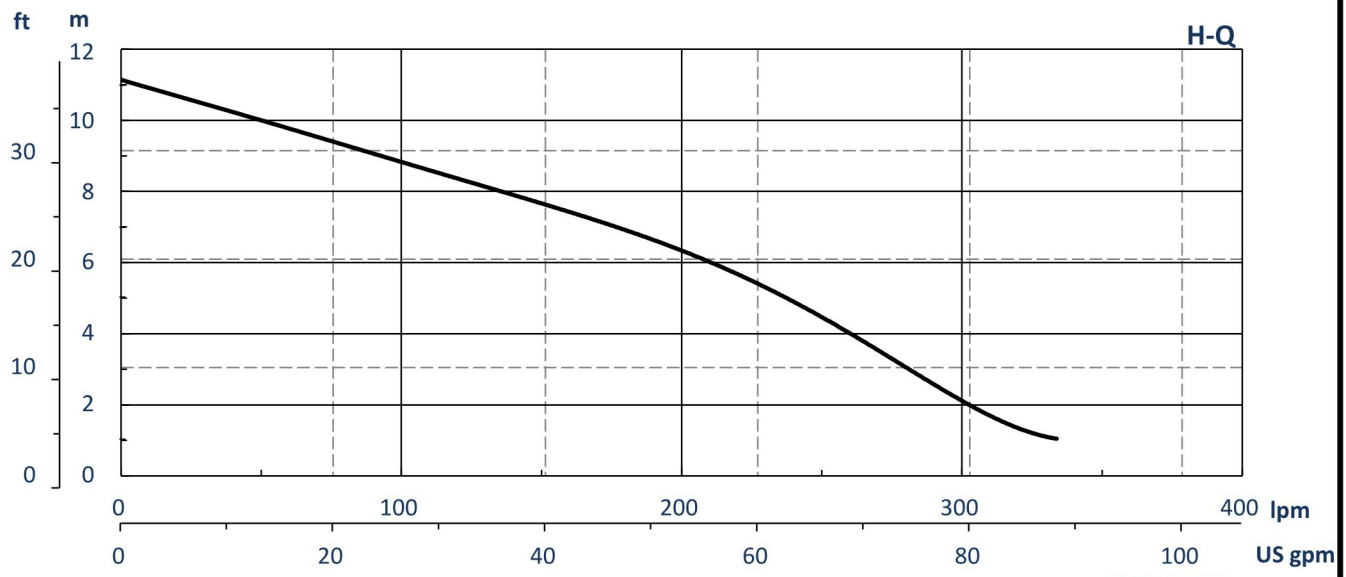

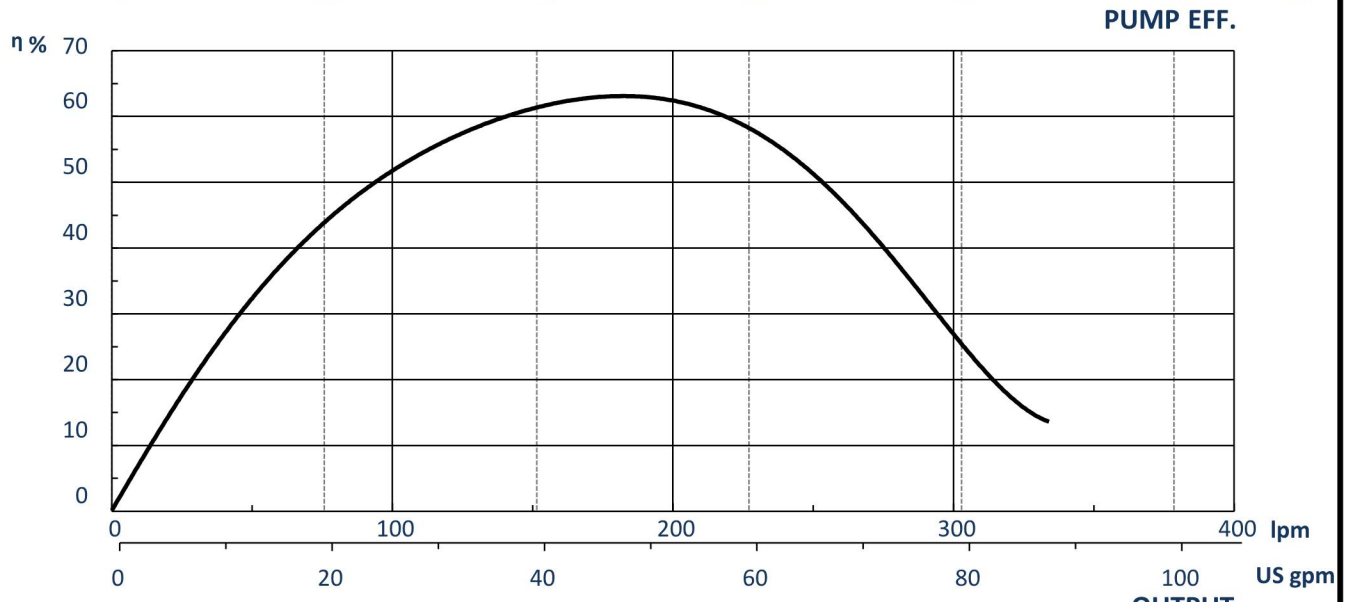

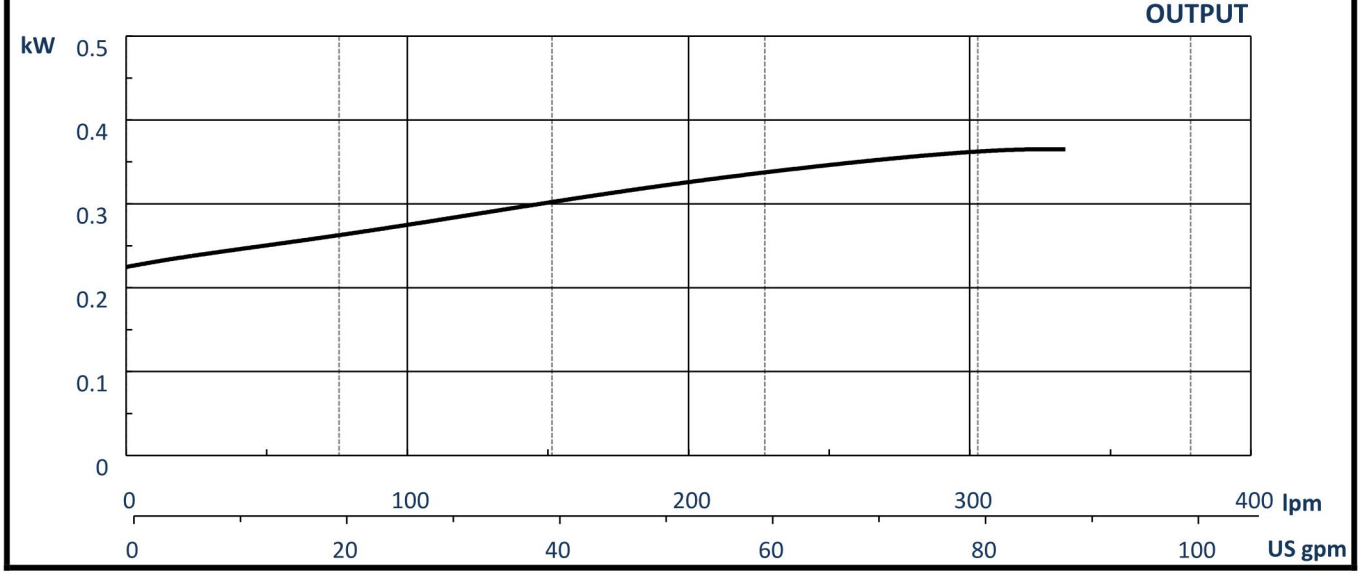

BOESCH

60HZ
BT SERIES

DIMENSIONAL DRAWING

MODELS: BT50 – BT100 (0.5~1HP)

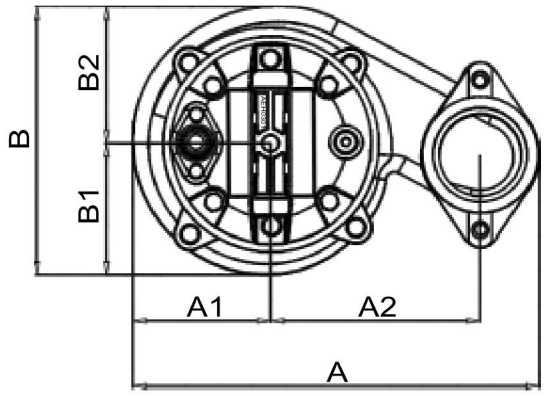

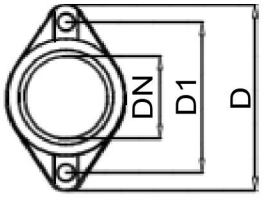

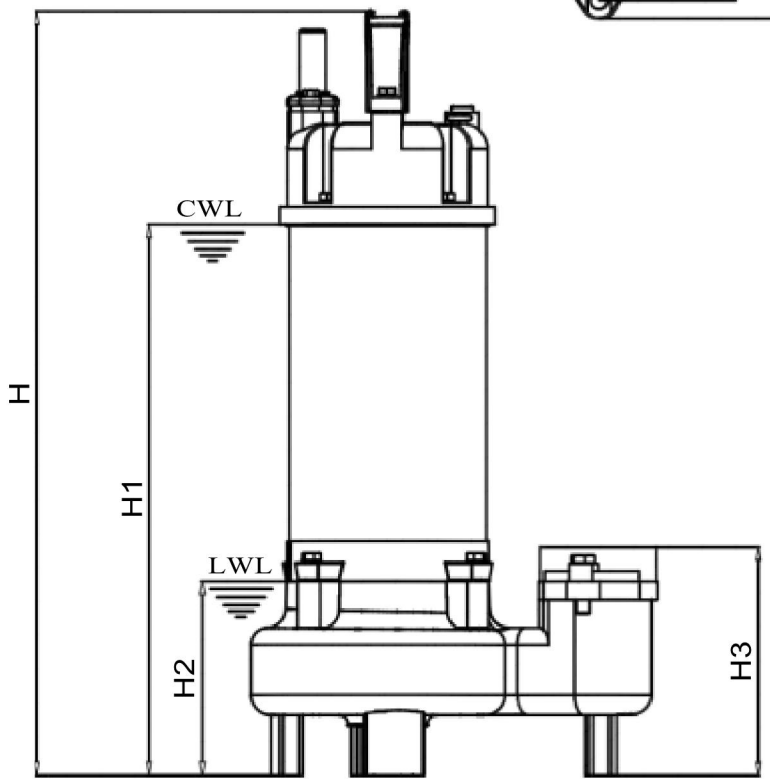

MODEL	A	A1	A2	B	B1	B2	D	D1	DN	H	H1	H2	H3	WT	
BT50	8.98	2.95	4.72	5.91	2.76	3.15	4.33	3.54	2	16.73	11.69	4.61	5.43	S:28.6	T:27.3
BT100	8.98	2.95	4.72	5.91	2.76	3.15	4.33	3.54	2	16.91	12.87	4.61	5.43	S:33.9	T:34.5

CWL: CONTINOUS RUNNING WATER LEVEL
LWL: LOWEST RUNNING WATER LEVEL
WT: WEIGHT WITHOUT CABLE
S: SINGLE PAHSE T: THREE PHASE

DIMENSIONS: INCHES
WEIGHT: LBS
PIPE CONNECTION TYPE: NPT

BOESCH SUMP PUMP MODEL BT100/3-460



WASTEWATER SOLUTIONS LLC

Arturo Garcia
102 NE 2nd Street, Suite 510
Boca Raton FL 33432
(954) 483 9269
arturo@wws-llc.com

BOESCH

60HZ
BT SERIES

MOTOR / PUMP SPECIFICATIONS

ITEM		DESCRIPTION
LIMITS	Liquid Temp	0~40°C
	Application	Commercial / Industrial / Municipal use
TYPE	Frequency	60Hz
	Motor	2P (3450RPM) Dry Motor
	Insulation	Class B
	Start Method	Direct On Line
	Protection	IP 68
	Protector	Auto-Cut
	Bearing	Ball Type
	Mech. Seal	Dual. Mechanical Seal
	Impeller	Vortex Impeller
MATERIAL	Motor Cover	AISI 316
	Motor Housing+Stator	AISI 316
	Shaft with Rotor	AISI 316
	Mech. Seal	Upper: CA/CE; Lower: SIC/SIC
	Pump Casing	AISI 316
	Impeller	AISI 316
	Cable	H07RN-F / SJTOW / STOW



MOTOR / PUMP DATA CHART

MODEL	OUTPUT		DISCHARGE	PHASE	1Ø			FREE PASSAGE	WEIGHT W/O CABLE
	HP	KW	INCHES	VOLTAGE	115V	208V	230V	INCHES	LBS
BT50/1	0.5	0.37	2	FULL LOAD AMPS	8A	4.4A	4A	1.4	29
BT100/1	1	0.75	2		12A	6.6A	6A	1.4	35
BT200/1	2	1.5	2 (3)		-	12.2A	11A	1.8	69
BT300/1	3	2.2	2 (3)		-	12.2A	11A	1.8	72

MODEL	OUTPUT		DISCHARGE	PHASE	3Ø			FREE PASSAGE	WEIGHT W/O CABLE
	HP	KW	INCHES	VOLTAGE	208V	230V	460V	INCHES	LBS
BT50/3	0.5	0.37	2	FULL LOAD AMPS	3.1A	2.8A	1.4A	1.4	28
BT100/3	1	0.75	2		4.4A	4A	2A	1.4	35
BT200/3	2	1.5	2 (3)		7.7A	7A	3.5A	1.8	65
BT300/3	3	2.2	2 (3)		8.8A	8A	4.5A	1.8	69
BT500/3	4	3.7	3 (4)		16.6A	15A	8A	1.8	106
BT750/3	5	5.5	3 (4)		23.2A	21A	10.5A	1.8	119

MOTOR / PUMP CONSTRUCTION MATERIAL

PART	MATERIAL	PART	MATERIAL
Cable	H07RN-F/STJOW/STOW	Mechanical Seal	Upper: CA / CE
Handle	Nylon 6(0.5-1HP) AISI 316 (2-7.5HP)	Mechanical Seal	Lower: SIC / SIC
Motor Cover	AISI 316	Seal Housing	AISI 316
Bracket	ASTM A48 Class 30	Lip Seal	VITON
Motor Housing + Stator	AISI 316	Impeller	AISI 316
Shaft with Rotor	AISI 316	Pump Casing	AISI 316
Oil Chamber	ASTM A48 Class 30(0.5-1HP) AISI 316(2-7.5HP)	Upper/Lower Bearing	NTN/TPI

BOESCH BT100

FILE NO. BT002

PUMP PERFORMANCE REPORT

MODEL	BT100		RATED
FREQUENCY	60 HZ	HEAD	30 ft / 9 m
DISCHARGE	2 inches / 50 mm	CAPACITY	60 gpm / 227 lpm
OUTPUT	1 hp / 0.75 kW	POLE / RPM	2 poles / 3450 rpm

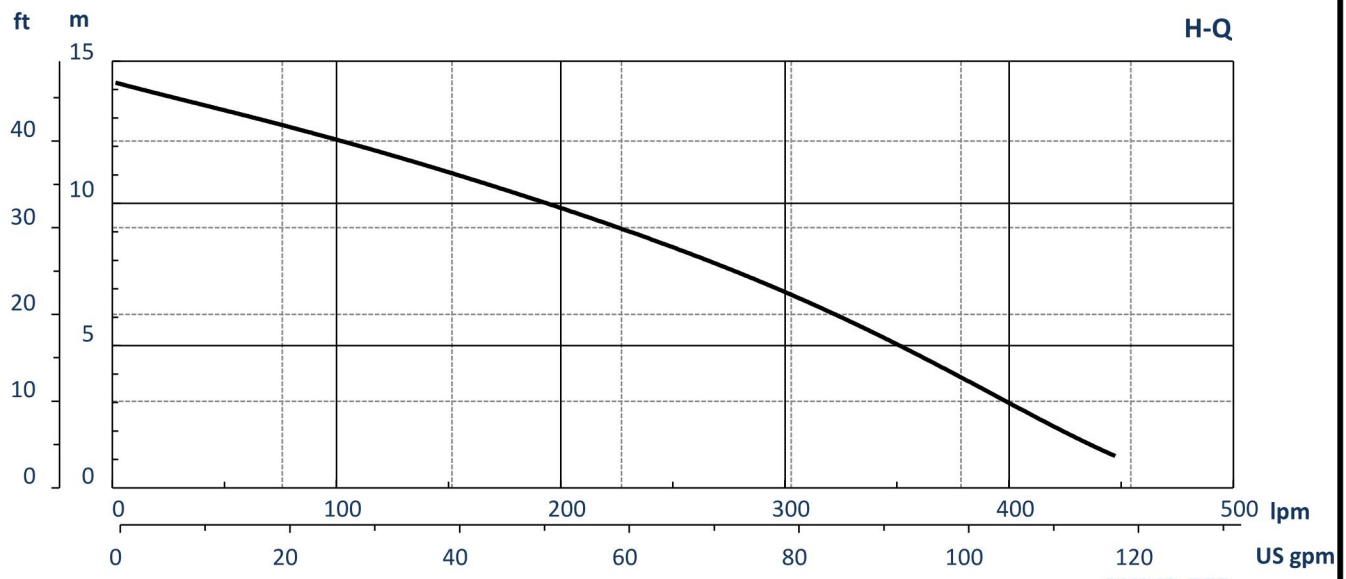

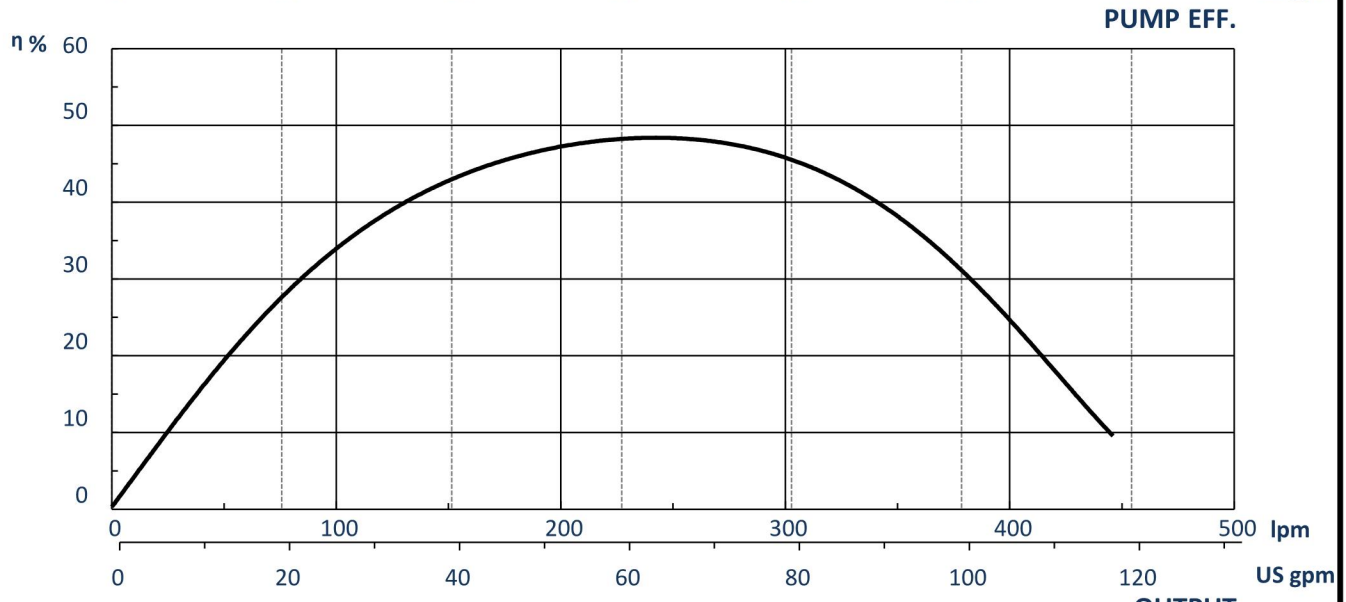

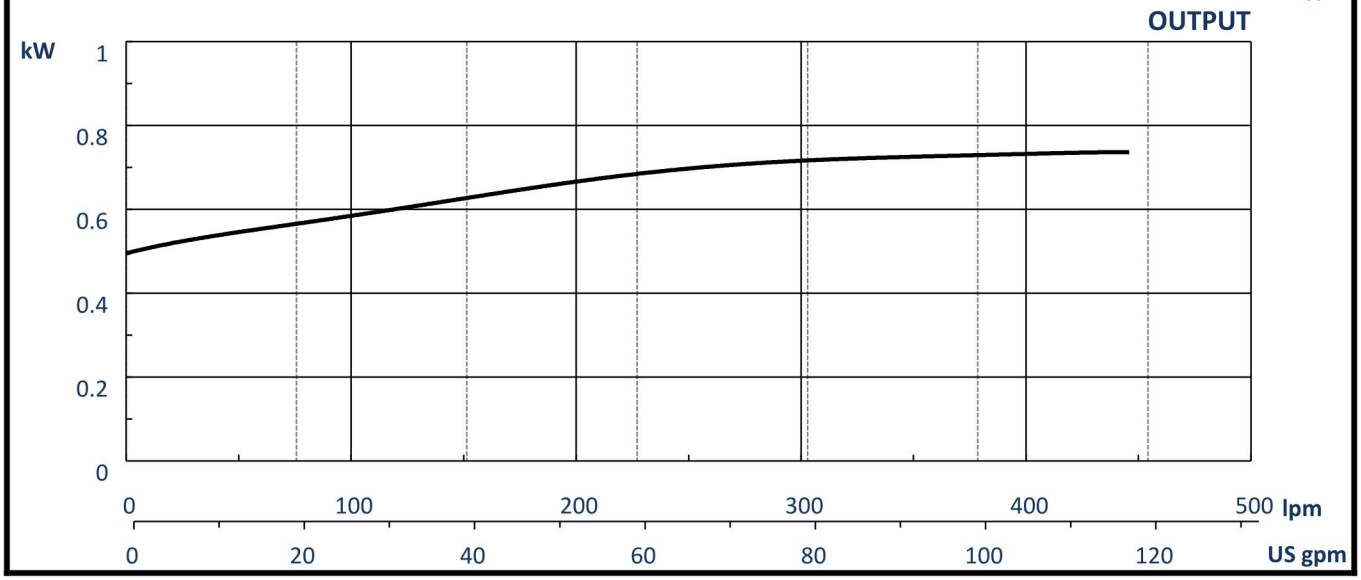

BOESCH

60HZ
BT SERIES

DIMENSIONAL DRAWING

MODELS: BT50 – BT100 (0.5~1HP)

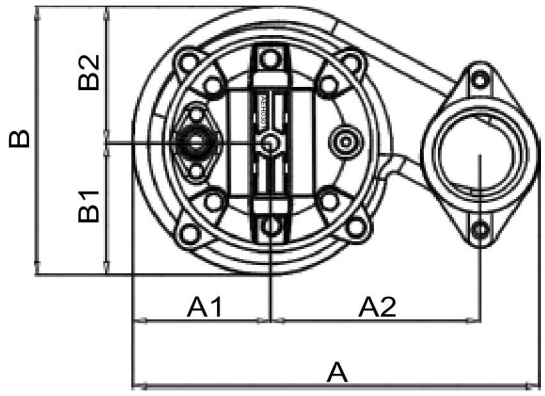

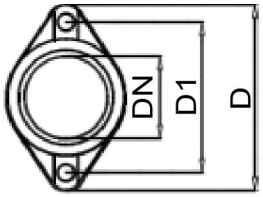

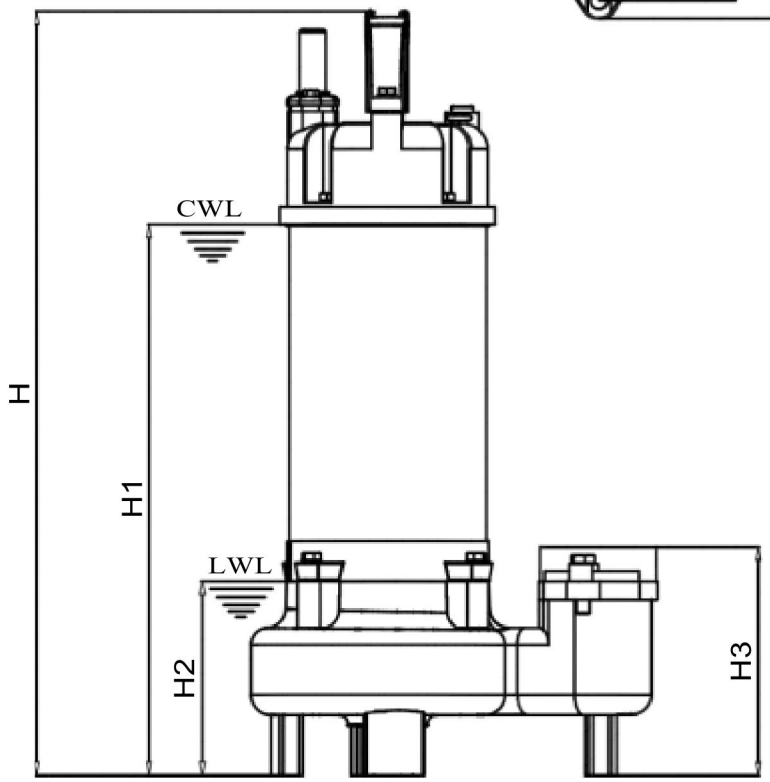

MODEL	A	A1	A2	B	B1	B2	D	D1	DN	H	H1	H2	H3	WT	
BT50	8.98	2.95	4.72	5.91	2.76	3.15	4.33	3.54	2	16.73	11.69	4.61	5.43	S:28.6	T:27.3
BT100	8.98	2.95	4.72	5.91	2.76	3.15	4.33	3.54	2	16.91	12.87	4.61	5.43	S:33.9	T:34.5

CWL: CONTINOUS RUNNING WATER LEVEL
LWL: LOWEST RUNNING WATER LEVEL
WT: WEIGHT WITHOUT CABLE
S: SINGLE PAHSE T: THREE PHASE

DIMENSIONS: INCHES
WEIGHT: LBS
PIPE CONNECTION TYPE: NPT

BOESCH SUMP PUMP MODEL BT200/3-460



WASTEWATER SOLUTIONS LLC

Arturo Garcia
102 NE 2nd Street, Suite 510
Boca Raton FL 33432
(954) 483 9269
arturo@wws-llc.com

BOESCH

60HZ
BT SERIES

MOTOR / PUMP SPECIFICATIONS

ITEM		DESCRIPTION
LIMITS	Liquid Temp	0~40°C
	Application	Commercial / Industrial / Municipal use
TYPE	Frequency	60Hz
	Motor	2P (3450RPM) Dry Motor
	Insulation	Class B
	Start Method	Direct On Line
	Protection	IP 68
	Protector	Auto-Cut
	Bearing	Ball Type
	Mech. Seal	Dual. Mechanical Seal
	Impeller	Vortex Impeller
MATERIAL	Motor Cover	AISI 316
	Motor Housing+Stator	AISI 316
	Shaft with Rotor	AISI 316
	Mech. Seal	Upper: CA/CE; Lower: SIC/SIC
	Pump Casing	AISI 316
	Impeller	AISI 316
	Cable	H07RN-F / SJTOW / STOW



MOTOR / PUMP DATA CHART

MODEL	OUTPUT		DISCHARGE	PHASE	1Ø			FREE PASSAGE	WEIGHT W/O CABLE
	HP	KW	INCHES	VOLTAGE	115V	208V	230V	INCHES	LBS
BT50/1	0.5	0.37	2	FULL LOAD AMPS	8A	4.4A	4A	1.4	29
BT100/1	1	0.75	2		12A	6.6A	6A	1.4	35
BT200/1	2	1.5	2 (3)		-	12.2A	11A	1.8	69
BT300/1	3	2.2	2 (3)		-	12.2A	11A	1.8	72

MODEL	OUTPUT		DISCHARGE	PHASE	3Ø			FREE PASSAGE	WEIGHT W/O CABLE
	HP	KW	INCHES	VOLTAGE	208V	230V	460V	INCHES	LBS
BT50/3	0.5	0.37	2	FULL LOAD AMPS	3.1A	2.8A	1.4A	1.4	28
BT100/3	1	0.75	2		4.4A	4A	2A	1.4	35
BT200/3	2	1.5	2 (3)		7.7A	7A	3.5A	1.8	65
BT300/3	3	2.2	2 (3)		8.8A	8A	4.5A	1.8	69
BT500/3	4	3.7	3 (4)		16.6A	15A	8A	1.8	106
BT750/3	5	5.5	3 (4)		23.2A	21A	10.5A	1.8	119

MOTOR / PUMP CONSTRUCTION MATERIAL

PART	MATERIAL	PART	MATERIAL
Cable	H07RN-F/STJOW/STOW	Mechanical Seal	Upper: CA / CE
Handle	Nylon 6(0.5-1HP) AISI 316 (2-7.5HP)	Mechanical Seal	Lower: SIC / SIC
Motor Cover	AISI 316	Seal Housing	AISI 316
Bracket	ASTM A48 Class 30	Lip Seal	VITON
Motor Housing + Stator	AISI 316	Impeller	AISI 316
Shaft with Rotor	AISI 316	Pump Casing	AISI 316
Oil Chamber	ASTM A48 Class 30(0.5-1HP) AISI 316(2-7.5HP)	Upper/Lower Bearing	NTN/TPI

BOESCH BT200

FILE NO. BT003

PUMP PERFORMANCE REPORT

MODEL	BT200		RATED
FREQUENCY	60 HZ	HEAD	45 ft / 13.7 ft
DISCHARGE	2 & 3 inches / 50 & 80 mm	CAPACITY	80 gpm / 303 lpm
OUTPUT	2 hp / 1.5 kW	POLE / RPM	2 poles / 3450 rpm

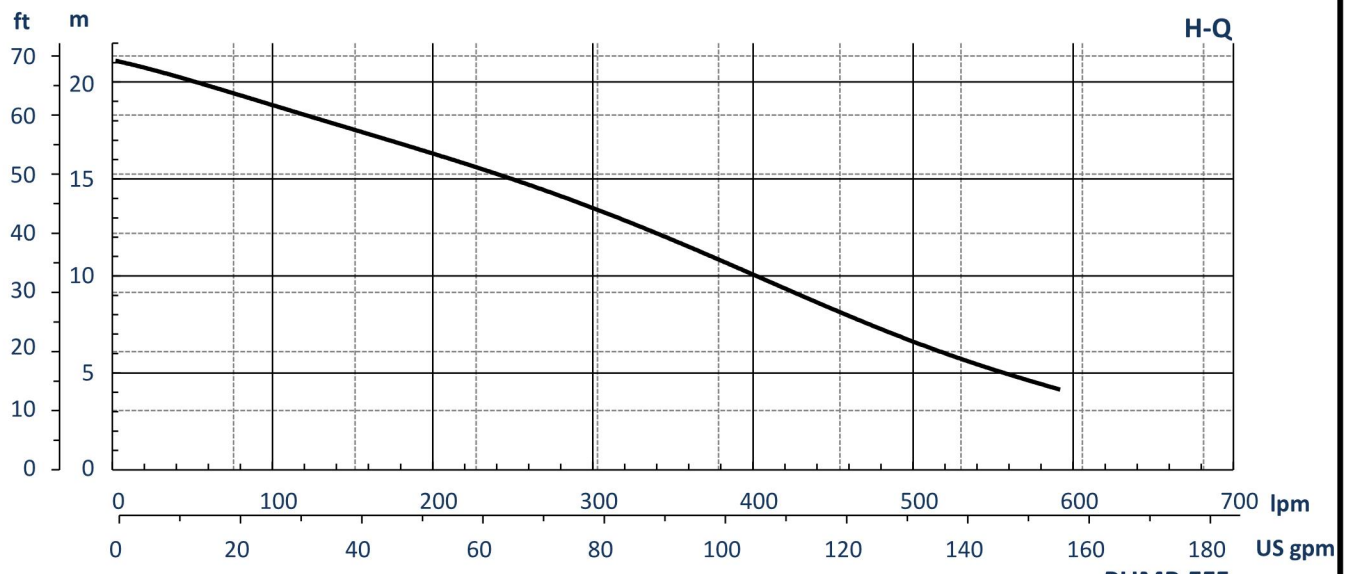

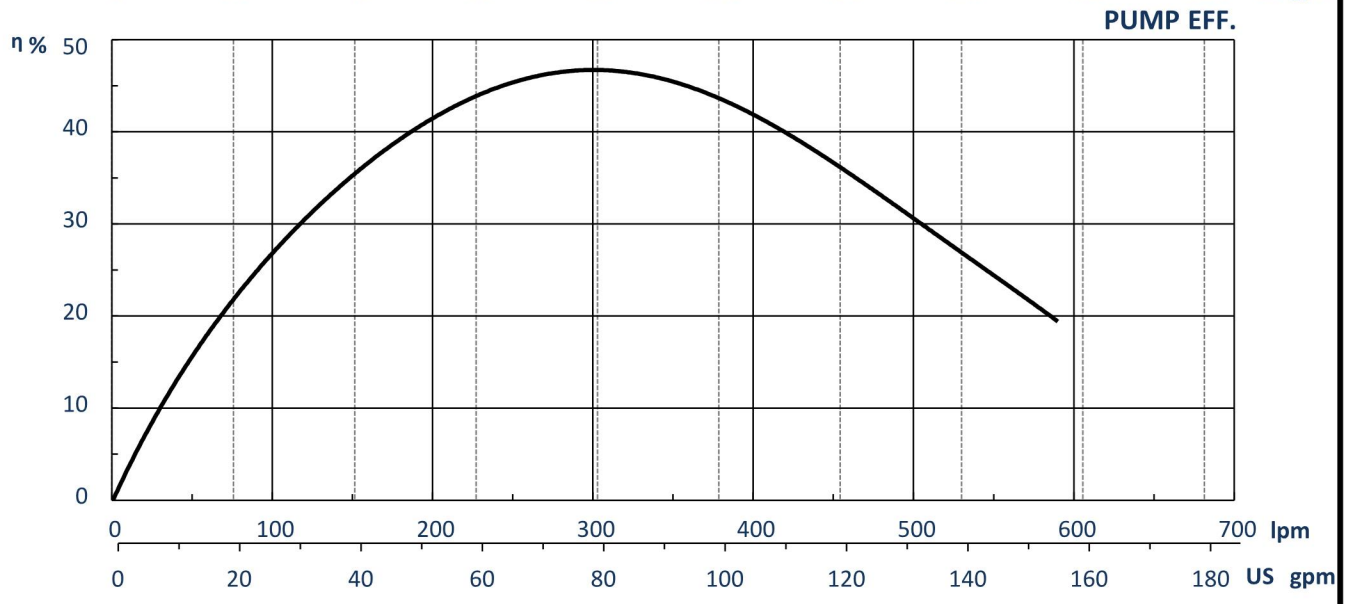

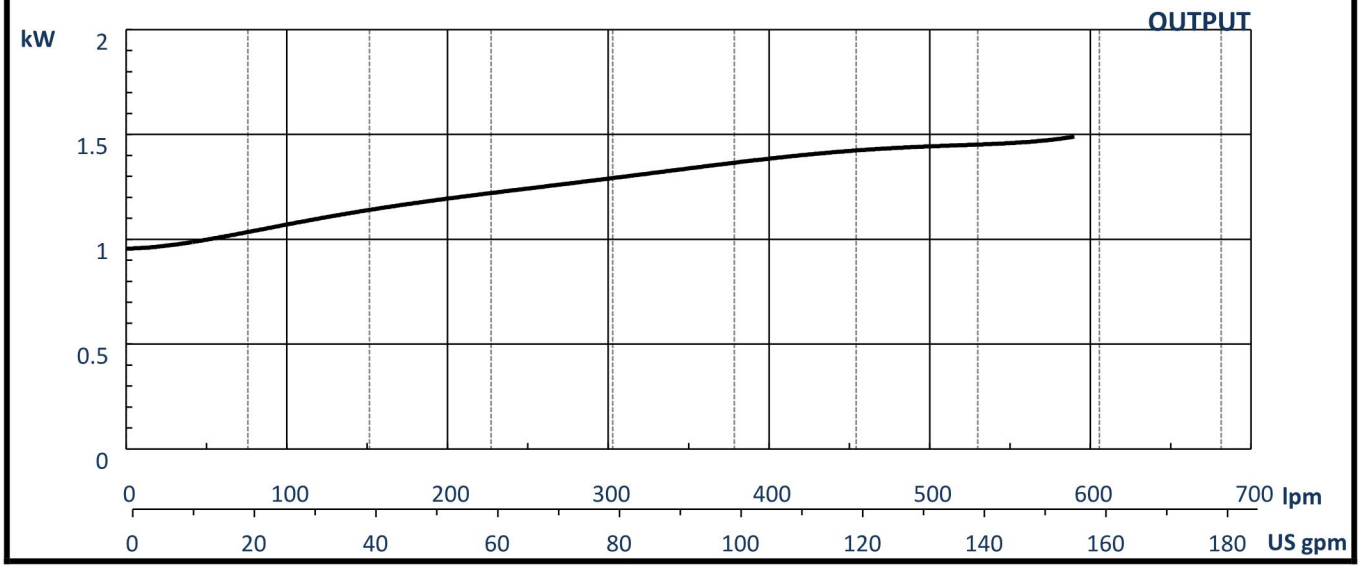

BOESCH

60HZ
BT SERIES

DIMENSIONAL DRAWING

MODELS: BT200 – BT300 (2~3HP)

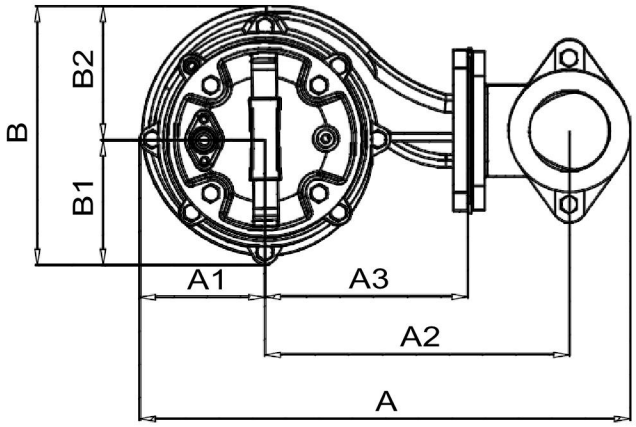

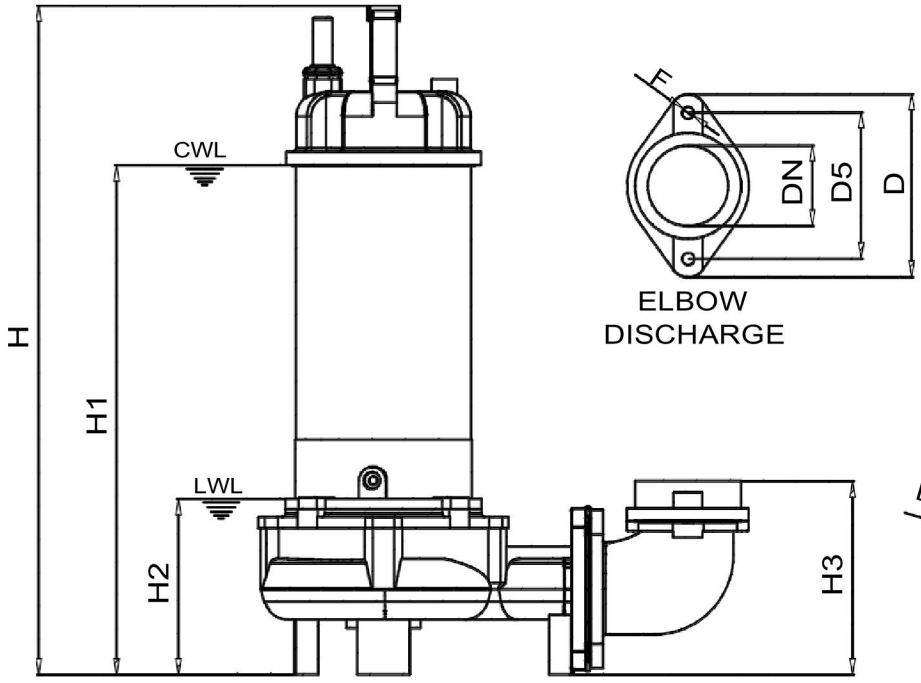

ELBOW
DISCHARGE

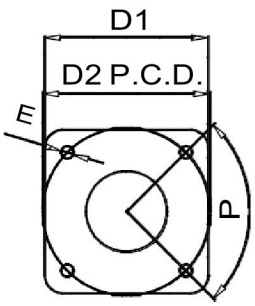

PUMP VOLUTE

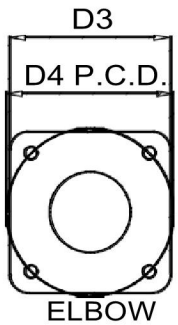

ELBOW
CONNECTION

MODEL	A	A1	A2	A3	B	B1	B2	D	D1	D2	D3
BT200	15.35	4.06	9.25	6.06	8.19	4.09	4.09	5.91	5.20	5.31	5.12
BT300	15.35	4.06	9.25	6.06	8.19	4.09	4.09	5.91	5.20	5.31	5.12

MODEL	D4	D5	DN	E	F	P	H	H1	H2	H3	WT	
BT200	5.31	4.72	2 / 3	.39	.39	90	20.94	15.75	5.91	5.98	S: 69	T: 65
BT300	5.31	4.72	2 / 3	.39	.39	90	20.52	17.32	5.91	5.98	S:72	T: 69

CWL: CONTINOUS RUNNING WATER LEVEL
LWL: LOWEST RUNNING WATER LEVEL
WT: WEIGHT WITHOUT CABLE
S: SINGLE PAHSE T: THREE PHASE

DIMENSIONS: INCHES
WEIGHT: LBS
PIPE CONNECTION TYPE: NPT

CAPRARI SUBMERSIBLE PUMP MODEL KSW100LD+004061N3



WASTEWATER SOLUTIONS LLC
Arturo Garcia
102 NE 2nd Street, Suite 510
Boca Raton FL 33432
(954) 483 9269
arturo@wws-llc.com

PERFORMANCE CURVES

Flow rate	-	Head requ.	-
Model	KSW100LD+004061N3		

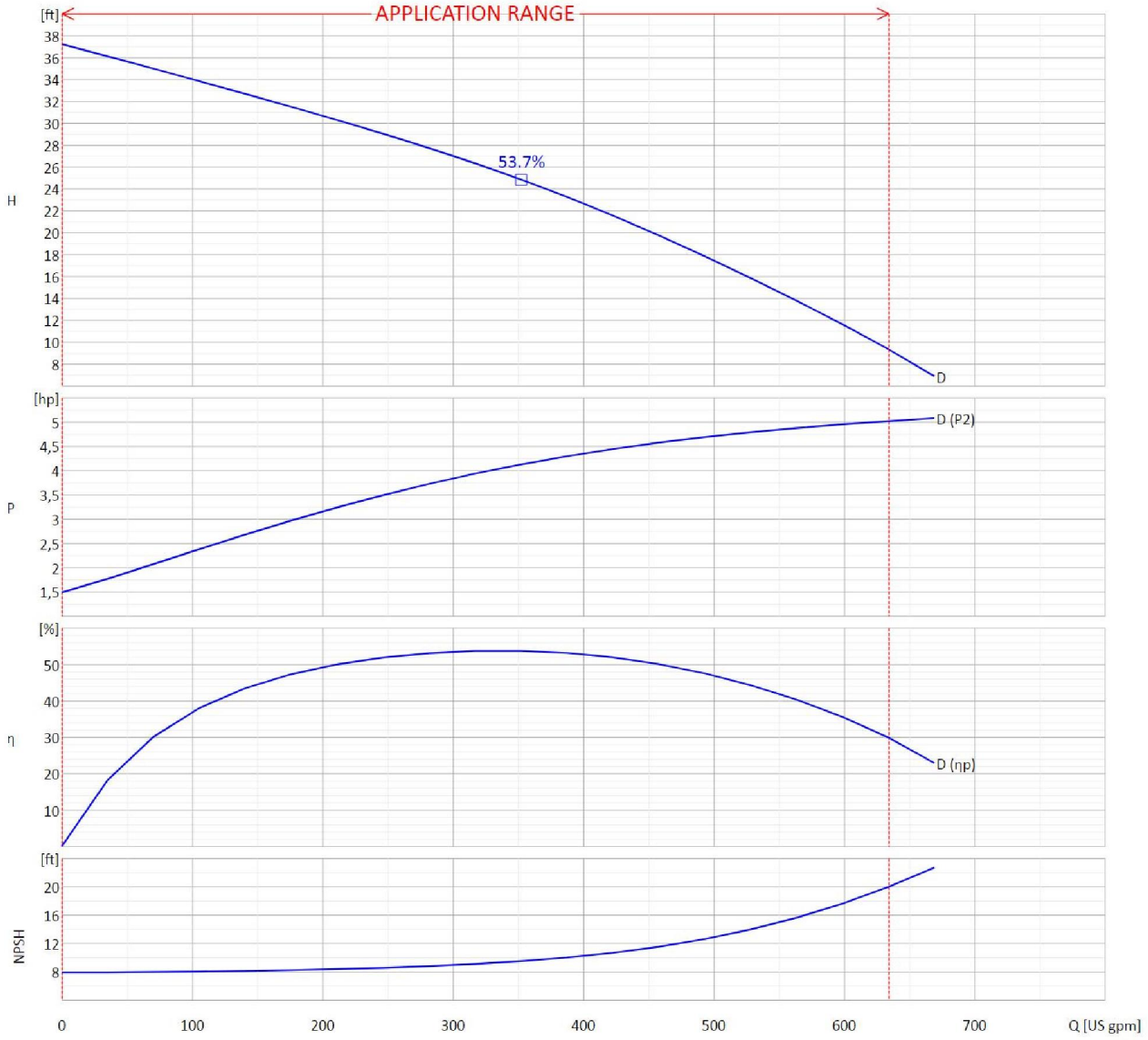

OPERATING DATA- ISO 9906:2012 3B -

Q [US gpm]	H [ft]	P [hp]	η [%]	NPSH [ft]	Speed [rpm]

WASTEWATER SOLUTIONS LLC
Arturo Garcia
102 NE 2nd Street, Suite 510
Boca Raton FL 33432
(954) 483 9269
arturo@wws-llc.com

DIMENSIONS

Flow rate	-	Head	-
Model	KSW100LD+004061N3		

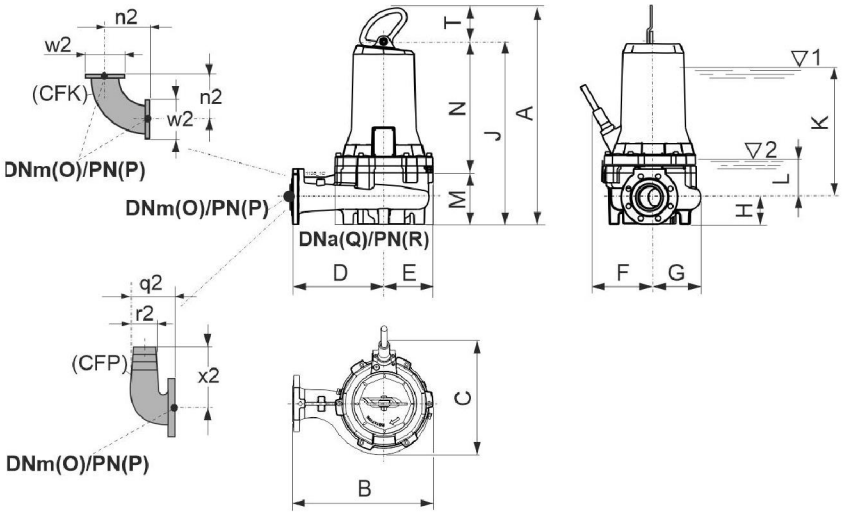

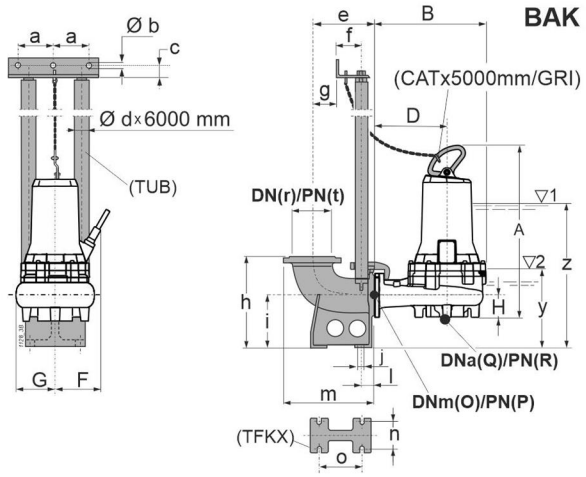

Dimensions [inch]

a	5.1	**K**	18.4	**x2**	10.7
A	31.4	**l**	1.9	**y**	12
b	0.5	**L**	4.2	**z**	26.3
B	18.6	**m**	13.3		
c	1.4	**M**	8.5		
C	15.9	**n**	5.3		
d	2"	**N**	18.2		
D	11.6	**n2**	8		
e	9	**o**	7.3		
E	7	**O**	3.9		
f	4	**P**	0.6		
F	8.9	**Q**	3.9		
g	1.9	**q2**	8.5		
G	7	**r**	3.9		
h	13.8	**R**	0.6		
H	4.4	**r2**	3.9		
i	7.9	**t**	0.6		
j	0.7	**T**	4.7		
J	26.7	**w2**	8.7		

WASTEWATER SOLUTIONS LLC
Arturo Garcia
102 NE 2nd Street, Suite 510
Boca Raton FL 33432
(954) 483 9269
arturo@wws-llc.com

TECHNICAL DATA SHEET

Customer:				Ref.:			
Item	1	Quantity	1	Required flow rate	-	Required head	-
Type	SUBMERSIBLE ELECTRIC PUMP FOR WASTE WATER			Model	KSW100LD+004061N3		

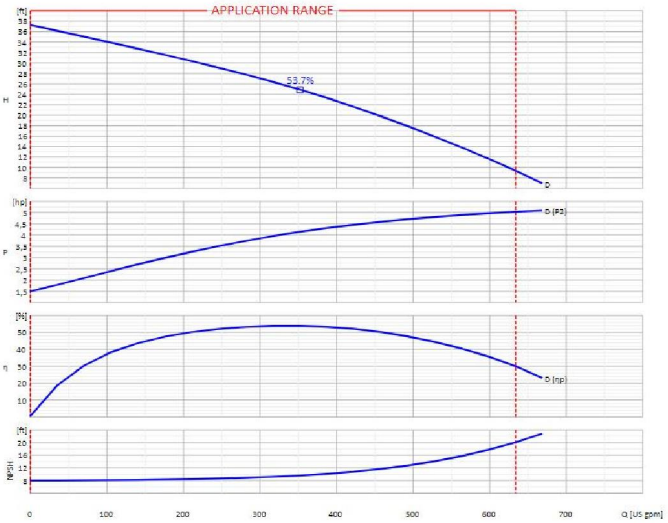

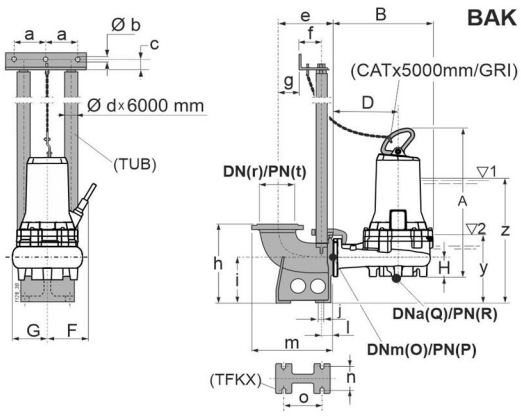

Dimensioni [mm]

a	5.1	f	4	l	1.9	R	0.6
A	31.4	F	8.9	m	13.3	t	0.6
b	0.5	g	1.9	n	5.3	y	12
B	18.6	G	7	o	7.3	z	26.3
c	1.4	h	13.8	O	3.9		
d	2"	H	4.4	P	0.6		
D	11.6	i	7.9	Q	3.9		
e	9	j	0.7	r	3.9		

OPERATING DATA- ISO 9906:2012 3B -

Q [US gpm]	H [ft]	P [hp]	η [%]	NPSH [ft]

CONSTRUCTION CHARACTERISTICS

Delivery diameter		3.94		inch
Type of Impeller		Open retracted		
Moment of inertia		0.10671 Kgm²		
Electric pump weight	Installation	140.3	30	Kg
Seal on pump side	Motor side	Mechanical		Mechanical
Type of installation		Vertical	BAKG	
Operation		Continuous (S1)		

OPERATING LIMITS

Pumped liquid	Waste water	
Max. temperature of pumped liquid	40	°C
Maximum density	62.427962	lb/ft³
Maximum viscosity	1.08E-05	ft²/s
Max. solid content	4	%
Max. number of starts/hr	20	
Free passage	3.94	inch
Minimum immersion depth	18.43	inch

OPERATING CHARACTERISTICS ****

Service flow rate		-		-
Service head		-		-
H (Q=0)	Hmax (Qmin)	0	37.2	ft
Qmin	Qmax	0	634	US gpm
Power consumption at duty point		-		-
Max power consumption		5		hp
Pump efficiency	Overall	-	-	-
Sense of rotation (*)		Clockwise		
Number of pumps installed		Operating		Stand-by
		1		0

ELECTRIC PUMP MATERIALS

Delivery body	Cast iron
Impeller	Cast iron
Mechanical seal on pump side	silicon carbide/ceramic
Flange for mechanical seal	Nodular cast iron
Support bearing	Cast iron
Oil box	Cast iron
Cable clamp	Stainless steel
Motor casing	Cast iron
Stator	Electrical steel
Complete shaft with rotor	Stainless steel/Magnetic steel
Conductivity probe	-
Oil centrifuge	Technopolymer
Mechanical seal on motor side	Ceramic/graphite
Round power cable	-
Screws and nuts	Stainless steel

ELECTRIC MOTOR CHARACTERISTICS

Nominal power		5		hp
Rated frequency		60		Hz
Rated voltage		460		V
Rated current		8.2		A
No. Poles	Rotation speed	6	1175	rpm
Type of motor		3 ~		
Efficiency 4/4-3/4-2/4 (**)		82.0 - 81.9 - 77.1 %		
Power factor 4/4-3/4-2/4		0.745 - 0.645 - 0.500		
Is/In	Ts/Tn	5.5		-
Thermal protection		Klixon		
Insulation class		H		
Protection class		IP68		
Explosion-proof		n.a.		
Power supply cable	Length	NSSHOU-J	0.39	inch
Efficiency class	S.F.	IE3		1.15

WASTEWATER SOLUTIONS LLC
Arturo Garcia
102 NE 2nd Street, Suite 510
Boca Raton FL 33432
(954) 483 9269
arturo@wws-llc.com

CAPRARI SUBMERSIBLE PUMP MODEL KSW100HG+005842N3



WASTEWATER SOLUTIONS LLC
Arturo Garcia
102 NE 2nd Street, Suite 510
Boca Raton FL 33432
(954) 483 9269
arturo@wws-llc.com

PERFORMANCE CURVES

Flow rate	-	Head requ.	-
Model	KSW100HG+005842N3		

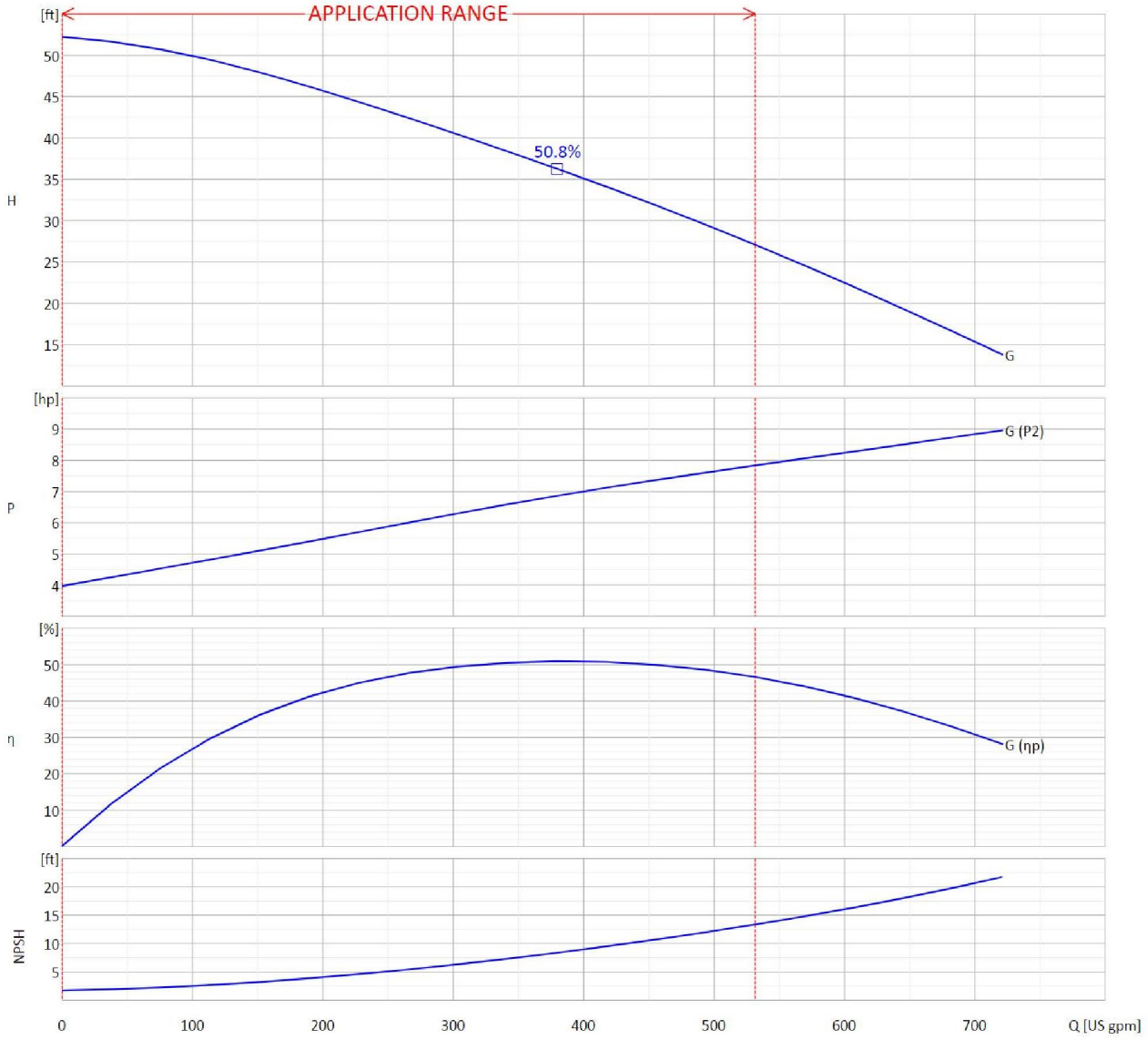

OPERATING DATA- ISO 9906:2012 3B -

Q [US gpm]	H [ft]	P [hp]	η [%]	NPSH [ft]	Speed [rpm]

WASTEWATER SOLUTIONS LLC
Arturo Garcia
102 NE 2nd Street, Suite 510
Boca Raton FL 33432
(954) 483 9269
arturo@wws-llc.com

DIMENSIONS

Flow rate	-	Head	-
Model	KSW100HG+005842N3		

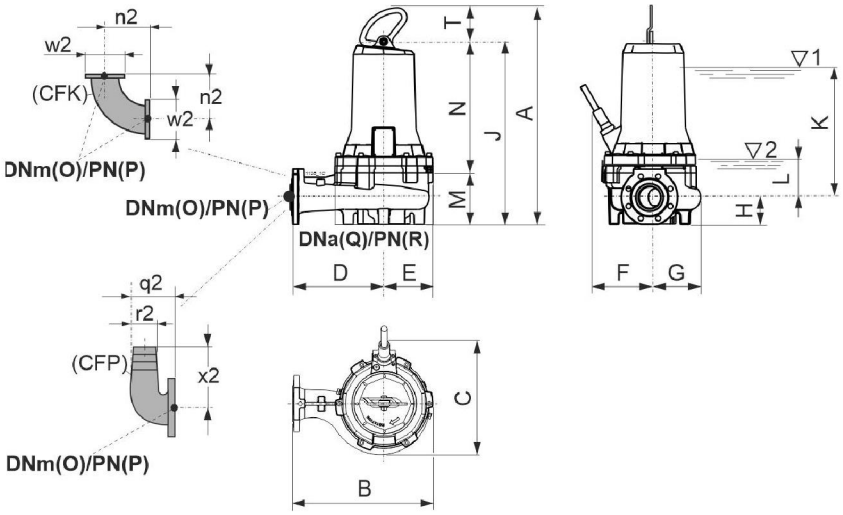

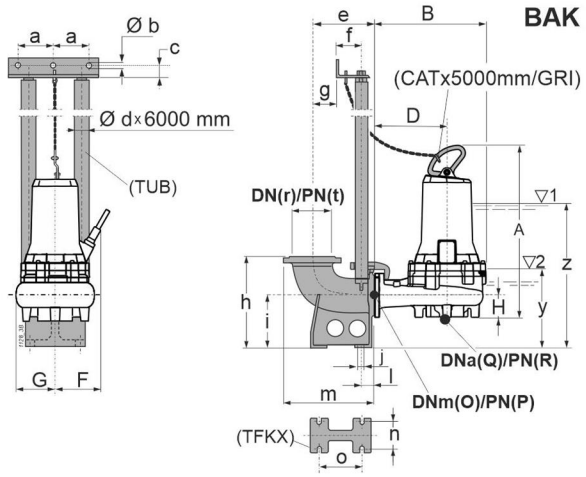

Dimensions [inch]

a	5.1	**K**	14.2	**x2**	10.7
A	29	**l**	1.9	**y**	12
b	0.5	**L**	4.2	**z**	22.1
B	17.1	**m**	13.3		
c	1.4	**M**	8.5		
C	15.4	**n**	5.3		
d	2"	**N**	15.8		
D	10.4	**n2**	8		
e	9	**o**	7.3		
E	6.7	**O**	3.9		
f	4	**P**	0.6		
F	8.7	**Q**	3.9		
g	1.9	**q2**	8.5		
G	6.7	**r**	3.9		
h	13.8	**R**	0.6		
H	4.4	**r2**	3.9		
i	7.9	**t**	0.6		
j	0.7	**T**	4.7		
J	24.4	**w2**	8.7		

WASTEWATER SOLUTIONS LLC
Arturo Garcia
102 NE 2nd Street, Suite 510
Boca Raton FL 33432
(954) 483 9269
arturo@wws-llc.com

TECHNICAL DATA SHEET

Customer:				Ref.:			
Item	2	Quantity	1	Required flow rate	-	Required head	-
Type	SUBMERSIBLE ELECTRIC PUMP FOR WASTE WATER			Model	KSW100HG+005842N3		

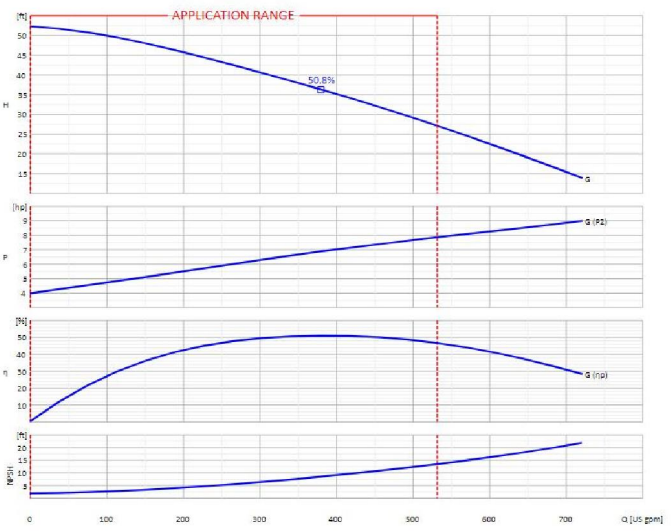

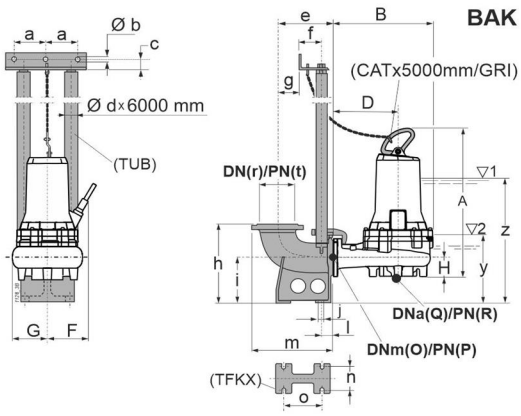

Dimensioni [mm]

a	5.1	f	4	l	1.9	R	0.6
A	29	F	8.7	m	13.3	t	0.6
b	0.5	g	1.9	n	5.3	y	12
B	17.1	G	6.7	o	7.3	z	22.1
c	1.4	h	13.8	O	3.9		
d	2"	H	4.4	P	0.6		
D	10.4	i	7.9	Q	3.9		
e	9	j	0.7	r	3.9		

OPERATING DATA- ISO 9906:2012 3B -

Q [US gpm]	H [ft]	P [hp]	η [%]	NPSH [ft]

CONSTRUCTION CHARACTERISTICS

Delivery diameter		3.94		inch
Type of Impeller		Open retracted		
Moment of inertia		0.04842 Kgm²		
Electric pump weight	Installation	120.6	30	Kg
Seal on pump side	Motor side	Mechanical		Mechanical
Type of installation		Vertical	BAKG	
Operation		Continuous (S1)		

OPERATING LIMITS

Pumped liquid	Waste water	
Max. temperature of pumped liquid	40	°C
Maximum density	62.427962	lb/ft³
Maximum viscosity	1.08E-05	ft²/s
Max. solid content	4	%
Max. number of starts/hr	20	
Free passage	3.94	inch
Minimum immersion depth	14.21	inch

OPERATING CHARACTERISTICS ****

Service flow rate		-		-
Service head		-		-
H (Q=0)	Hmax (Qmin)	0	52.2	ft
Qmin	Qmax	0	531.5	US gpm
Power consumption at duty point		-		-
Max power consumption		7.8		hp
Pump efficiency	Overall	-	-	-
Sense of rotation (*)		Clockwise		
Number of pumps installed		Operating		Stand-by
		1		0

ELECTRIC PUMP MATERIALS

Delivery body	Cast iron
Impeller	Cast iron
Mechanical seal on pump side	silicon carbide/ceramic
Flange for mechanical seal	Nodular cast iron
Support bearing	Cast iron
Oil box	Cast iron
Cable clamp	Stainless steel
Motor casing	Cast iron
Stator	Electrical steel
Complete shaft with rotor	Stainless steel/Magnetic steel
Conductivity probe	-
Oil centrifuge	Technopolymer
Mechanical seal on motor side	Ceramic/graphite
Round power cable	-
Screws and nuts	Stainless steel

ELECTRIC MOTOR CHARACTERISTICS

Nominal power		8		hp
Rated frequency		60		Hz
Rated voltage		460		V
Rated current		10.6		A
No. Poles	Rotation speed	4	1760	rpm
Type of motor		3 ~		
Efficiency 4/4-3/4-2/4 (**)		87.1 - 87.5 - 86.9 %		
Power factor 4/4-3/4-2/4		0.790 - 0.710 - 0.580		
Is/In	Ts/Tn	6.4		-
Thermal protection		Klixon		
Insulation class		H		
Protection class		IP68		
Explosion-proof		n.a.		
Power supply cable	Length		0.39	inch
Efficiency class	S.F.	IE3	1.15	

WASTEWATER SOLUTIONS LLC
Arturo Garcia
102 NE 2nd Street, Suite 510
Boca Raton FL 33432
(954) 483 9269
arturo@wws-llc.com

CAPRARI SUBMERSIBLE PUMP MODEL KSW100LE+012542N3



WASTEWATER SOLUTIONS LLC

Arturo Garcia
102 NE 2nd Street, Suite 510
Boca Raton FL 33432
(954) 483 9269
arturo@wws-llc.com

PERFORMANCE CURVES

Flow rate	-	Head requ.	-
Model	KSW100LE+012542N3		

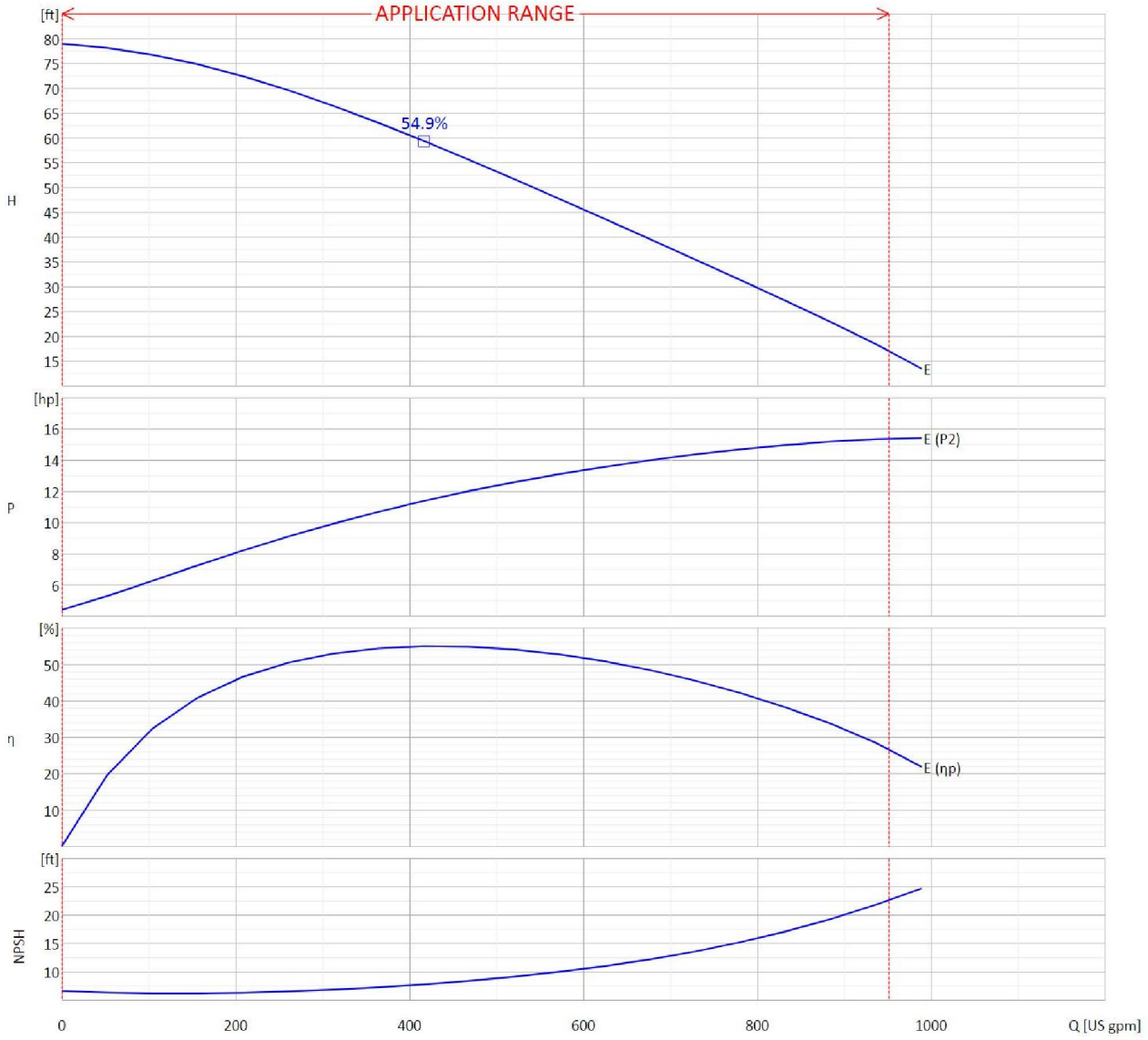

OPERATING DATA- ISO 9906:2012 3B -

Q [US gpm]	H [ft]	P [hp]	η [%]	NPSH [ft]	Speed [rpm]

WASTEWATER SOLUTIONS LLC
Arturo Garcia
102 NE 2nd Street, Suite 510
Boca Raton FL 33432
(954) 483 9269
arturo@wws-llc.com

DIMENSIONS

Flow rate	-	Head	-
Model	KSW100LE+012542N3		

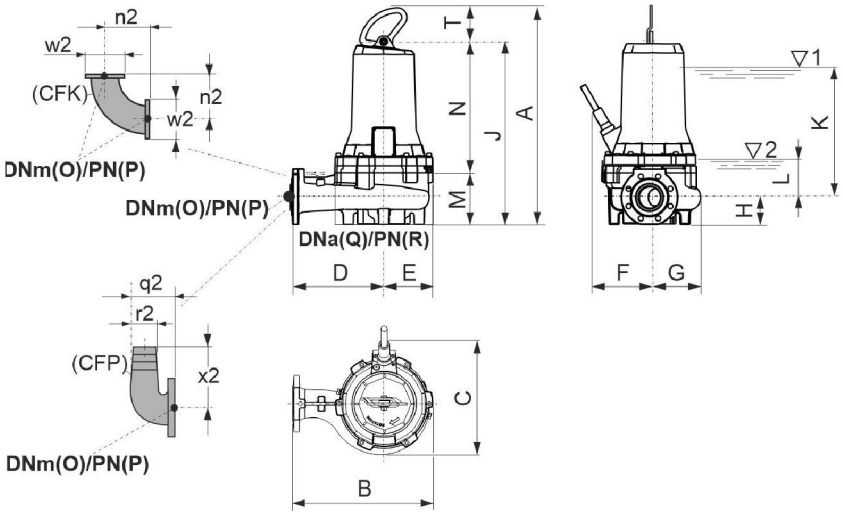

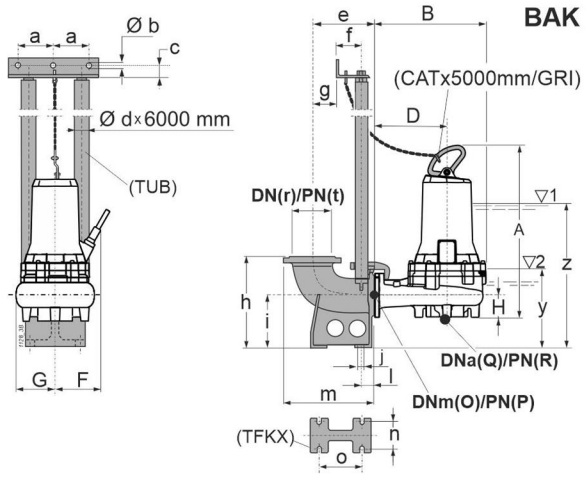

Dimensions [inch]

a	5.1	**K**	18.4	**x2**	10.7
A	31.5	**l**	1.9	**y**	12
b	0.5	**L**	4.2	**z**	26.3
B	18.6	**m**	13.3		
c	1.4	**M**	8.5		
C	16.3	**n**	5.3		
d	2"	**N**	18.3		
D	11.6	**n2**	8		
e	9	**o**	7.3		
E	7	**O**	3.9		
f	4	**P**	0.6		
F	9.3	**Q**	3.9		
g	1.9	**q2**	8.5		
G	7	**r**	3.9		
h	13.8	**R**	0.6		
H	4.4	**r2**	3.9		
i	7.9	**t**	0.6		
j	0.7	**T**	4.7		
J	26.8	**w2**	8.7		

WASTEWATER SOLUTIONS LLC
Arturo Garcia
102 NE 2nd Street, Suite 510
Boca Raton FL 33432
(954) 483 9269
arturo@wws-llc.com

TECHNICAL DATA SHEET

Customer:				Ref.:			
Item	3	Quantity	1	Required flow rate	-	Required head	-
Type	SUBMERSIBLE ELECTRIC PUMP FOR WASTE WATER			Model	KSW100LE+012542N3		

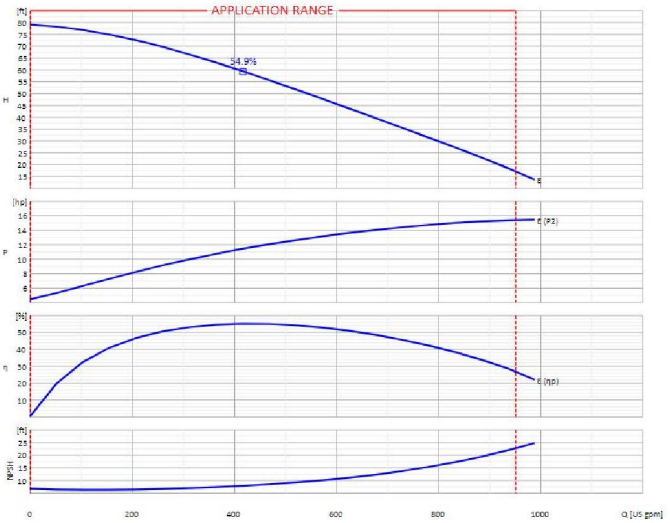

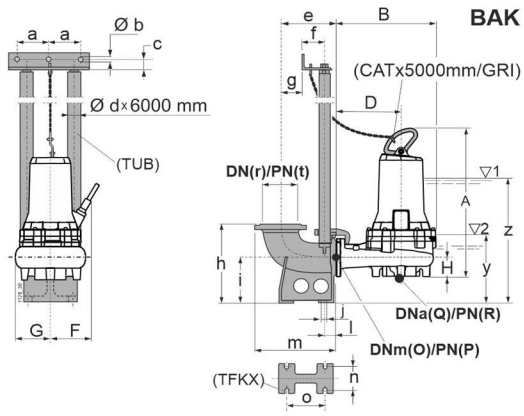

Dimensioni [mm]

a	5.1	f	4	l	1.9	R	0.6
A	31.5	F	9.3	m	13.3	t	0.6
b	0.5	g	1.9	n	5.3	y	12
B	18.6	G	7	o	7.3	z	26.3
c	1.4	h	13.8	O	3.9		
d	2"	H	4.4	P	0.6		
D	11.6	i	7.9	Q	3.9		
e	9	j	0.7	r	3.9		

OPERATING DATA- ISO 9906:2012 3B -

Q [US gpm]	H [ft]	P [hp]	η [%]	NPSH [ft]

CONSTRUCTION CHARACTERISTICS

Delivery diameter		3.94		inch
Type of Impeller		Open retracted		
Moment of inertia		0.13106 Kgm²		
Electric pump weight	Installation	171.65	30	Kg
Seal on pump side	Motor side	Mechanical		Mechanical
Type of installation		Vertical	BAKG	
Operation		Continuous (S1)		

OPERATING LIMITS

Pumped liquid	Waste water	
Max. temperature of pumped liquid	40	°C
Maximum density	62.427962	lb/ft³
Maximum viscosity	1.08E-05	ft²/s
Max. solid content	4	%
Max. number of starts/hr	10	
Free passage	3.94	inch
Minimum immersion depth	18.43	inch

OPERATING CHARACTERISTICS ****

Service flow rate		-		-
Service head		-		-
H (Q=0)	Hmax (Qmin)	0	78.9	ft
Qmin	Qmax	0	951	US gpm
Power consumption at duty point		-		-
Max power consumption		15.3		hp
Pump efficiency	Overall	-	-	-
Sense of rotation (*)		Clockwise		
Number of pumps installed		Operating		Stand-by
		1		0

ELECTRIC PUMP MATERIALS

Delivery body	Cast iron
Impeller	Cast iron
Mechanical seal on pump side	silicon carbide/ceramic
Flange for mechanical seal	Nodular cast iron
Support bearing	Cast iron
Oil box	Cast iron
Cable clamp	Stainless steel
Motor casing	Cast iron
Stator	Electrical steel
Complete shaft with rotor	Stainless steel/Magnetic steel
Conductivity probe	-
Oil centrifuge	Technopolymer
Mechanical seal on motor side	Ceramic/graphite
Round power cable	-
Screws and nuts	Stainless steel

ELECTRIC MOTOR CHARACTERISTICS

Nominal power		17		hp
Rated frequency		60		Hz
Rated voltage		460		V
Rated current		21.1		A
No. Poles	Rotation speed	4	1775	rpm
Type of motor		3 ~		
Efficiency 4/4-3/4-2/4 (**)		90.5 - 90.2 - 89.3 %		
Power factor 4/4-3/4-2/4		0.820 - 0.755 - 0.635		
Is/In	Ts/Tn	5.8		-
Thermal protection		Klixon		
Insulation class		H		
Protection class		IP68		
Explosion-proof		n.a.		
Power supply cable	Length		0.39	inch
Efficiency class	S.F.	IE3	1.15	

WASTEWATER SOLUTIONS LLC
Arturo Garcia
102 NE 2nd Street, Suite 510
Boca Raton FL 33432
(954) 483 9269
arturo@wws-llc.com

CAPRARI SUBMERSIBLE PUMP MODEL KSM150NA+015062N3



WASTEWATER SOLUTIONS LLC
Arturo Garcia
102 NE 2nd Street, Suite 510
Boca Raton FL 33432
(954) 483 9269
arturo@wws-llc.com

PERFORMANCE CURVES

Flow rate	-	Head requ.	-
Model	KSM150NA+015062N3		

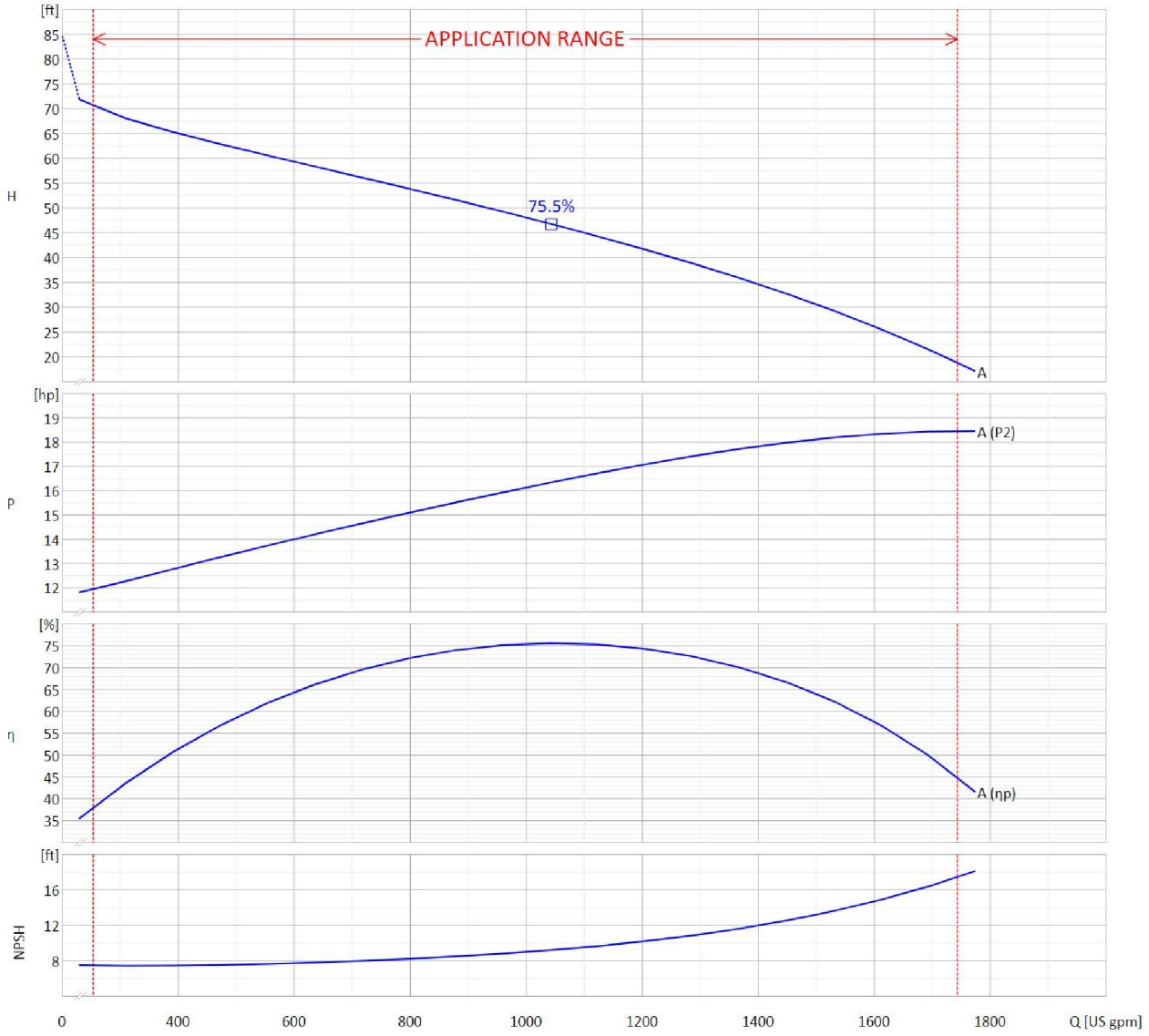

OPERATING DATA- ISO 9906:2012 3B -

Q [US gpm]	H [ft]	P [hp]	η [%]	NPSH [ft]	Speed [rpm]

WASTEWATER SOLUTIONS LLC
Arturo Garcia
102 NE 2nd Street, Suite 510
Boca Raton FL 33432
(954) 483 9269
arturo@wws-llc.com

DIMENSIONS

Flow rate	-	Head	-
Model	KSM150NA+015062N3		

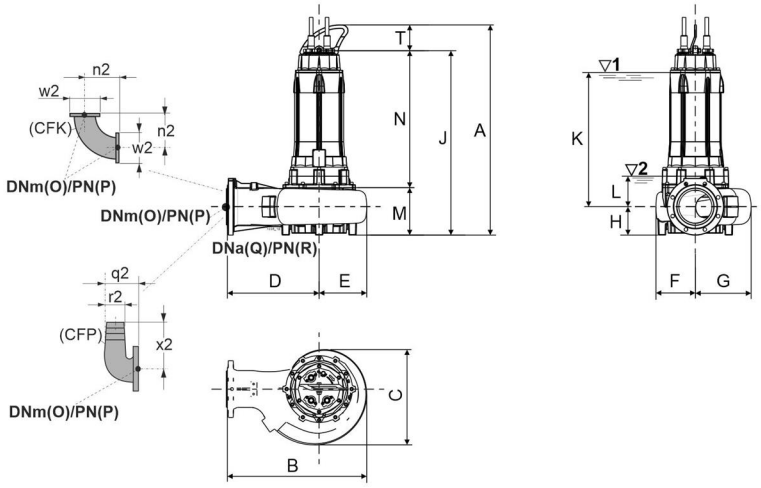

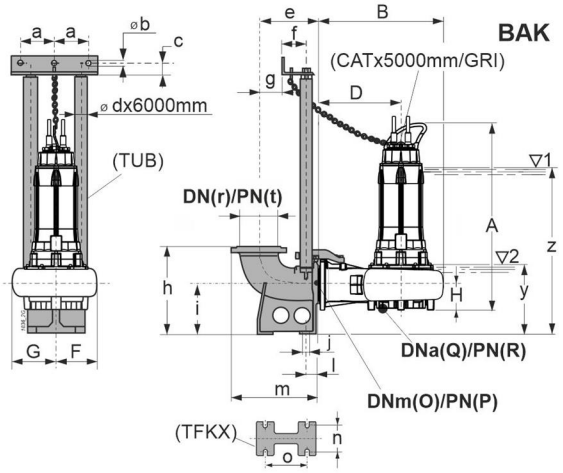

Dimensions [inch]

a	6.2	**K**	31.3	**x2**	15
A	48.8	**l**	3.1	**y**	18.3
b	0.5	**L**	6.9	**z**	42.7
B	25.9	**m**	21.9		
c	1.4	**M**	10.4		
C	20	**n**	8.3		
d	3"	**N**	32.3		
D	15.9	**n2**	15.6		
e	15.2	**o**	11		
E	10	**O**	5.9		
f	4.6	**P**	0.6		
F	9	**Q**	5.9		
g	7.1	**q2**	12.4		
G	10.9	**r**	7.9		
h	21.3	**R**	0.6		
H	6.3	**r2**	5.9		
i	11.4	**t**	0.4		
j	0.9	**T**	6.1		
J	42.7	**w2**	11.2		

WASTEWATER SOLUTIONS LLC
Arturo Garcia
102 NE 2nd Street, Suite 510
Boca Raton FL 33432
(954) 483 9269
arturo@wws-llc.com

TECHNICAL DATA SHEET

Customer:				Ref.:			
Item	4	Quantity	1	Required flow rate	-	Required head	-
Type	SUBMERSIBLE ELECTRIC PUMP FOR WASTE WATER			Model	KSM150NA+015062N3		

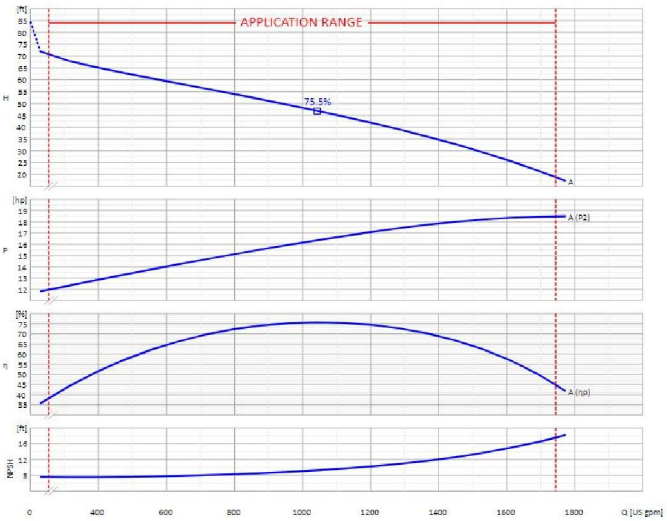

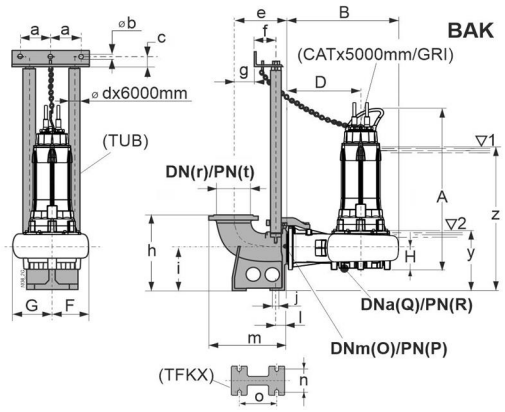

Dimensioni [mm]

a	6.2	f	4.6	l	3.1	R	0.6
A	48.8	F	9	m	21.9	t	0.4
b	0.5	g	7.1	n	8.3	y	18.3
B	25.9	G	10.9	o	11	z	42.7
c	1.4	h	21.3	O	5.9		
d	3"	H	6.3	P	0.6		
D	15.9	i	11.4	Q	5.9		
e	15.2	j	0.9	r	7.9		

OPERATING DATA- ISO 9906:2012 3B -

Q [US gpm]	H [ft]	P [hp]	η [%]	NPSH [ft]

CONSTRUCTION CHARACTERISTICS

Delivery diameter		5.91		inch
Type of Impeller		Single channel		
Moment of inertia		0.66876 Kgm²		
Electric pump weight	Installation	397.85	88	Kg
Seal on pump side	Motor side	Mechanical		Mechanical
Type of installation		Vertical	BAKM/I	
Operation		Continuous (S1)		

OPERATING LIMITS

Pumped liquid	Waste water	
Max. temperature of pumped liquid	40	°C
Maximum density	62.427962	lb/ft³
Maximum viscosity	1.08E-05	ft²/s
Max. solid content	4	%
Max. number of starts/hr	10	
Free passage	4.53	inch
Minimum immersion depth	31.3	inch

OPERATING CHARACTERISTICS ****

Service flow rate		-		-
Service head		-		-
H (Q=0)	Hmax (Qmin)	84.6	70.7	ft
Qmin	Qmax	253.6	1743.5	US gpm
Power consumption at duty point		-		-
Max power consumption		18.4		hp
Pump efficiency	Overall	-	-	-
Sense of rotation (*)		Clockwise		
Number of pumps installed		Operating		Stand-by
		1		0

ELECTRIC PUMP MATERIALS

Delivery body	Cast iron
Impeller	Cast iron
Impeller wear ring	Steel/Rubber
Conductivity probe	-
Mechanical seal on pump side	silicon carbide/ceramic
Flange for mechanical seal	Nodular cast iron
Support bearing	Nodular cast iron
Oil box	Cast iron
Cable clamp	Stainless steel
Motor casing	Cast iron
Stator	Electrical steel
Complete shaft with rotor	Stainless steel/Magnetic steel
Oil centrifuge	Technopolymer
Mechanical seal on motor side	Ceramic/graphite
Round power cable	-
Round auxiliary cable	-
Head cover	Cast iron

ELECTRIC MOTOR CHARACTERISTICS

Nominal power		20		hp
Rated frequency		60		Hz
Rated voltage		460		V
Rated current		29.5		A
No. Poles	Rotation speed	6	1185	rpm
Type of motor		3 ~		
Efficiency 4/4-3/4-2/4 (**)		90-89.2-88.6 %		
Power factor 4/4-3/4-2/4		0.71-0.61-0.475		
Is/In	Ts/Tn	6.3		-
Thermal protection		Klixon		
Insulation class		H		
Protection class		IP68		
Explosion-proof		n.a.		
Power supply cable	Length		0.39	inch
Efficiency class	S.F.	IE3	1.15	

WASTEWATER SOLUTIONS LLC
Arturo Garcia
102 NE 2nd Street, Suite 510
Boca Raton FL 33432
(954) 483 9269
arturo@wws-llc.com

CAPRARI SUBMERSIBLE PUMP MODEL KSM100NG+023042N3



WASTEWATER SOLUTIONS LLC
Arturo Garcia
102 NE 2nd Street, Suite 510
Boca Raton FL 33432
(954) 483 9269
arturo@wws-llc.com

PERFORMANCE CURVES

Flow rate	-	Head requ.	-
Model	KSM100NG+023042N3		

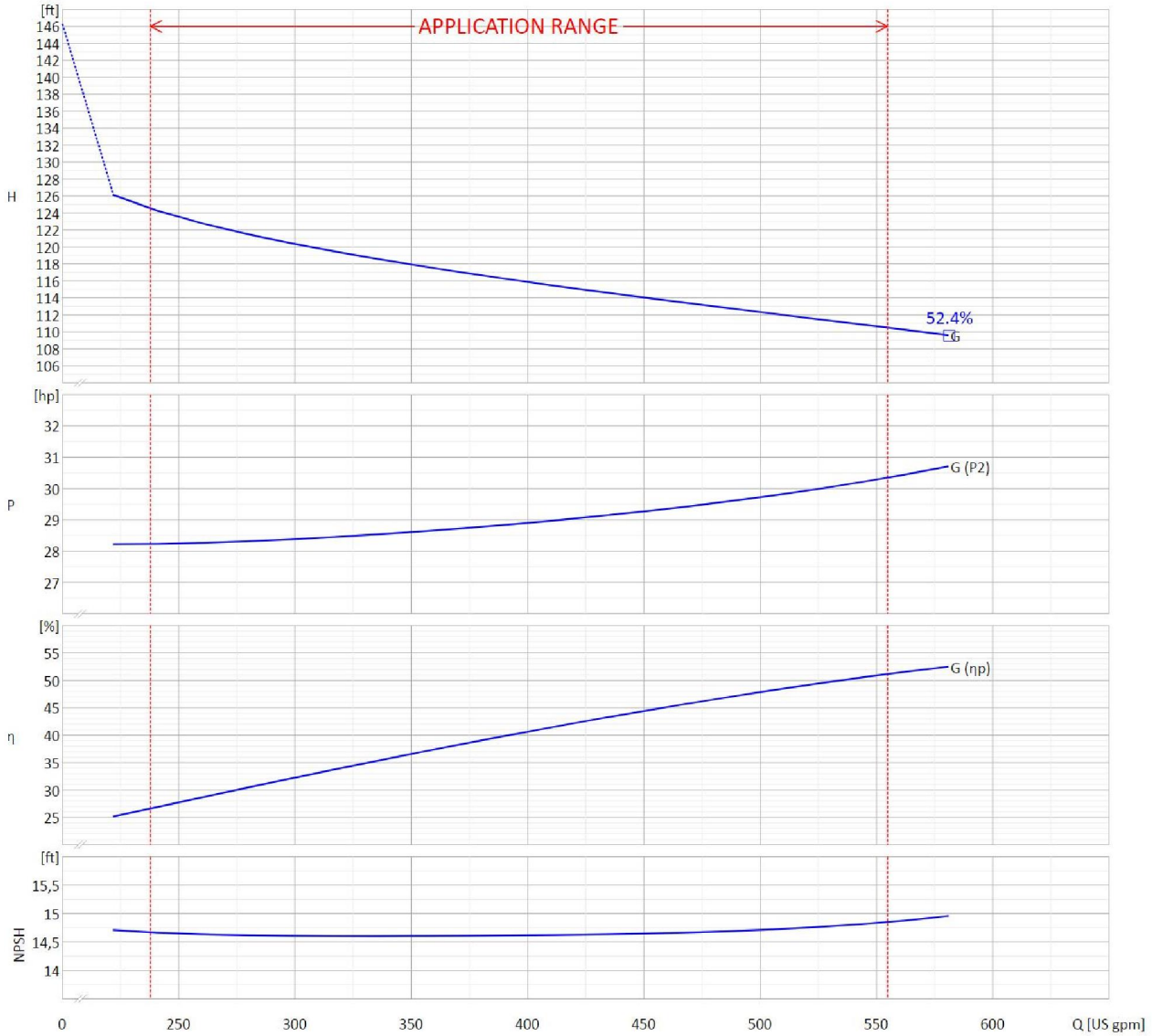

OPERATING DATA- ISO 9906:2012 3B -

Q [US gpm]	H [ft]	P [hp]	η [%]	NPSH [ft]	Speed [rpm]

WASTEWATER SOLUTIONS LLC
Arturo Garcia
102 NE 2nd Street, Suite 510
Boca Raton FL 33432
(954) 483 9269
arturo@wws-llc.com

DIMENSIONS

Flow rate	-	Head	-
Model	KSM100NG+023042N3		

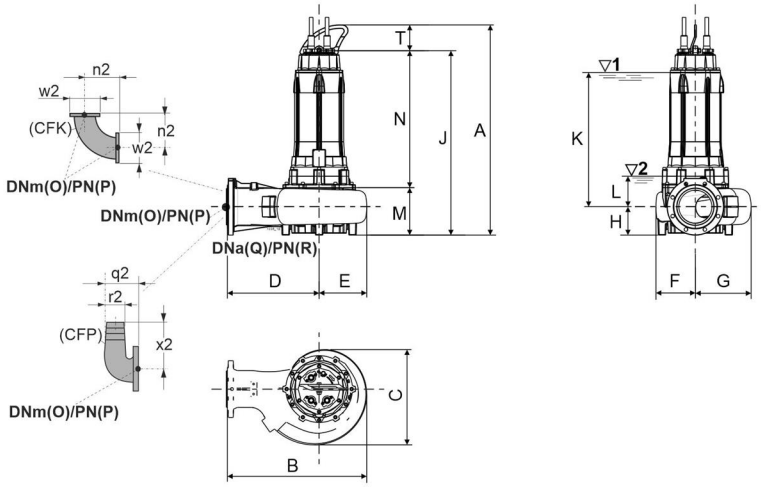

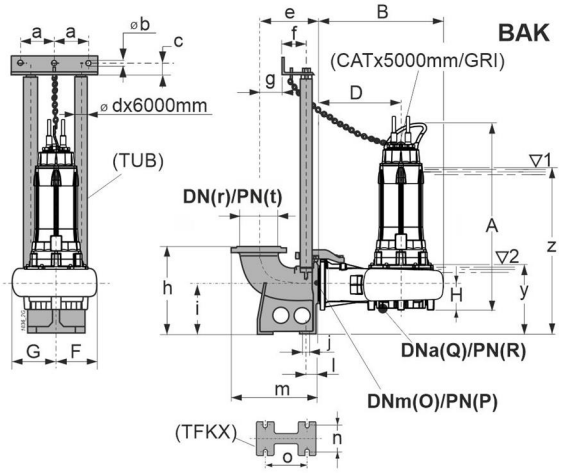

Dimensions [inch]

a	5.1	**K**	31.3	**x2**	10.7
A	48.8	**l**	1.9	**y**	17.9
b	0.5	**L**	6.9	**z**	42.3
B	21.7	**m**	13.3		
c	1.4	**M**	10.4		
C	19.1	**n**	7.6		
d	2"	**N**	32.3		
D	12.1	**n2**	8		
e	9	**o**	7.3		
E	9.6	**O**	3.9		
f	4	**P**	0.6		
F	8.8	**Q**	5.9		
g	1.9	**q2**	8.5		
G	10.3	**r**	3.9		
h	16.9	**R**	0.6		
H	6.3	**r2**	3.9		
i	11	**t**	0.6		
j	0.7	**T**	6.1		
J	42.7	**w2**	8.7		

WASTEWATER SOLUTIONS LLC
Arturo Garcia
102 NE 2nd Street, Suite 510
Boca Raton FL 33432
(954) 483 9269
arturo@wws-llc.com

TECHNICAL DATA SHEET

Customer:				Ref.:			
Item	5	Quantity	1	Required flow rate	-	Required head	-
Type	SUBMERSIBLE ELECTRIC PUMP FOR WASTE WATER			Model	KSM100NG+023042N3		

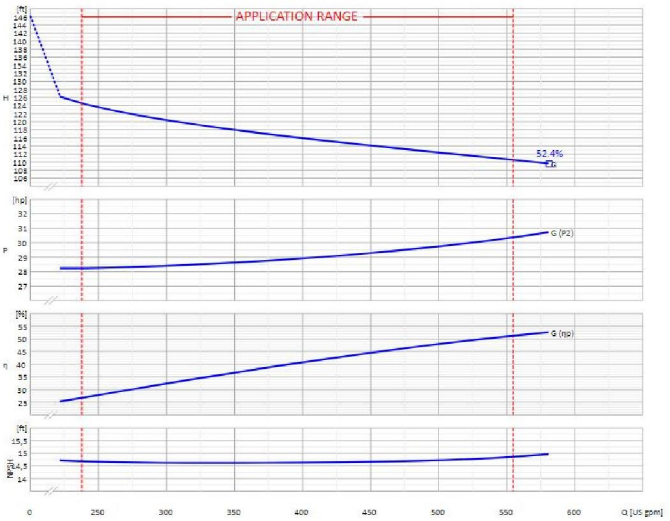

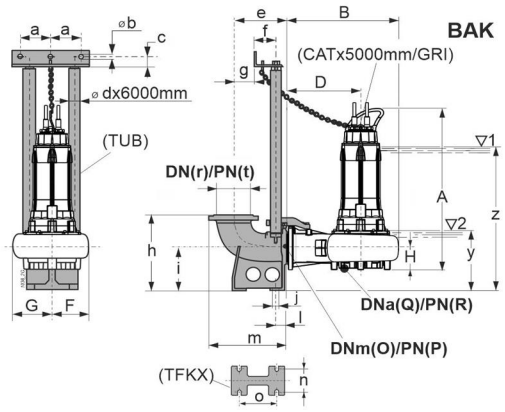

Dimensioni [mm]

a	5.1	f	4	l	1.9	R	0.6
A	48.8	F	8.8	m	13.3	t	0.6
b	0.5	g	1.9	n	7.6	y	17.9
B	21.7	G	10.3	o	7.3	z	42.3
c	1.4	h	16.9	O	3.9		
d	2"	H	6.3	P	0.6		
D	12.1	i	11	Q	5.9		
e	9	j	0.7	r	3.9		

OPERATING DATA- ISO 9906:2012 3B -

Q [US gpm]	H [ft]	P [hp]	η [%]	NPSH [ft]

CONSTRUCTION CHARACTERISTICS

Delivery diameter		3.94		inch
Type of Impeller		Single channel		
Moment of inertia		0.58219 Kgm²		
Electric pump weight	Installation	378.53	21	Kg
Seal on pump side	Motor side	Mechanical		Mechanical
Type of installation		Vertical	BAK100	
Operation		Continuous (S1)		

OPERATING LIMITS

Pumped liquid	Waste water	
Max. temperature of pumped liquid	40	°C
Maximum density	62.427962	lb/ft³
Maximum viscosity	1.08E-05	ft²/s
Max. solid content	4	%
Max. number of starts/hr	10	
Free passage	3.94	inch
Minimum immersion depth	31.3	inch

OPERATING CHARACTERISTICS ****

Service flow rate		-		-
Service head		-		-
H (Q=0)	Hmax (Qmin)	146.3	124.5	ft
Qmin	Qmax	237.8	554.8	US gpm
Power consumption at duty point		-		-
Max power consumption		30.3		hp
Pump efficiency	Overall	-	-	-
Sense of rotation (*)		Clockwise		
Number of pumps installed		Operating		Stand-by
		1		0

ELECTRIC PUMP MATERIALS

Delivery body	Cast iron
Impeller	Cast iron
Impeller wear ring	Steel/Rubber
Conductivity probe	-
Mechanical seal on pump side	silicon carbide/ceramic
Flange for mechanical seal	Nodular cast iron
Support bearing	Nodular cast iron
Oil box	Cast iron
Cable clamp	Stainless steel
Motor casing	Cast iron
Stator	Electrical steel
Complete shaft with rotor	Stainless steel/Magnetic steel
Oil centrifuge	Technopolymer
Mechanical seal on motor side	Ceramic/graphite
Round power cable	-
Round auxiliary cable	-
Head cover	Cast iron

ELECTRIC MOTOR CHARACTERISTICS

Nominal power		31		hp
Rated frequency		60		Hz
Rated voltage		460		V
Rated current		37.4		A
No. Poles	Rotation speed	4	1780	rpm
Type of motor		3 ~		
Efficiency 4/4-3/4-2/4 (**)		91.9-91.5-92 %		
Power factor 4/4-3/4-2/4		0.84-0.785-0.685		
Is/In	Ts/Tn	6.5		-
Thermal protection		Klixon		
Insulation class		H		
Protection class		IP68		
Explosion-proof		n.a.		
Power supply cable	Length		0.39	inch
Efficiency class	S.F.	IE3	1.15	

WASTEWATER SOLUTIONS LLC
Arturo Garcia
102 NE 2nd Street, Suite 510
Boca Raton FL 33432
(954) 483 9269
arturo@wws-llc.com

CAPRARI SUBMERSIBLE PUMP MODEL KSM150RA+034062N1



WASTEWATER SOLUTIONS LLC

Arturo Garcia
102 NE 2nd Street, Suite 510
Boca Raton FL 33432
(954) 483 9269
arturo@wws-llc.com

PERFORMANCE CURVES

Flow rate	-	Head requ.	-
Model	**KSM150RA+034062N1**		

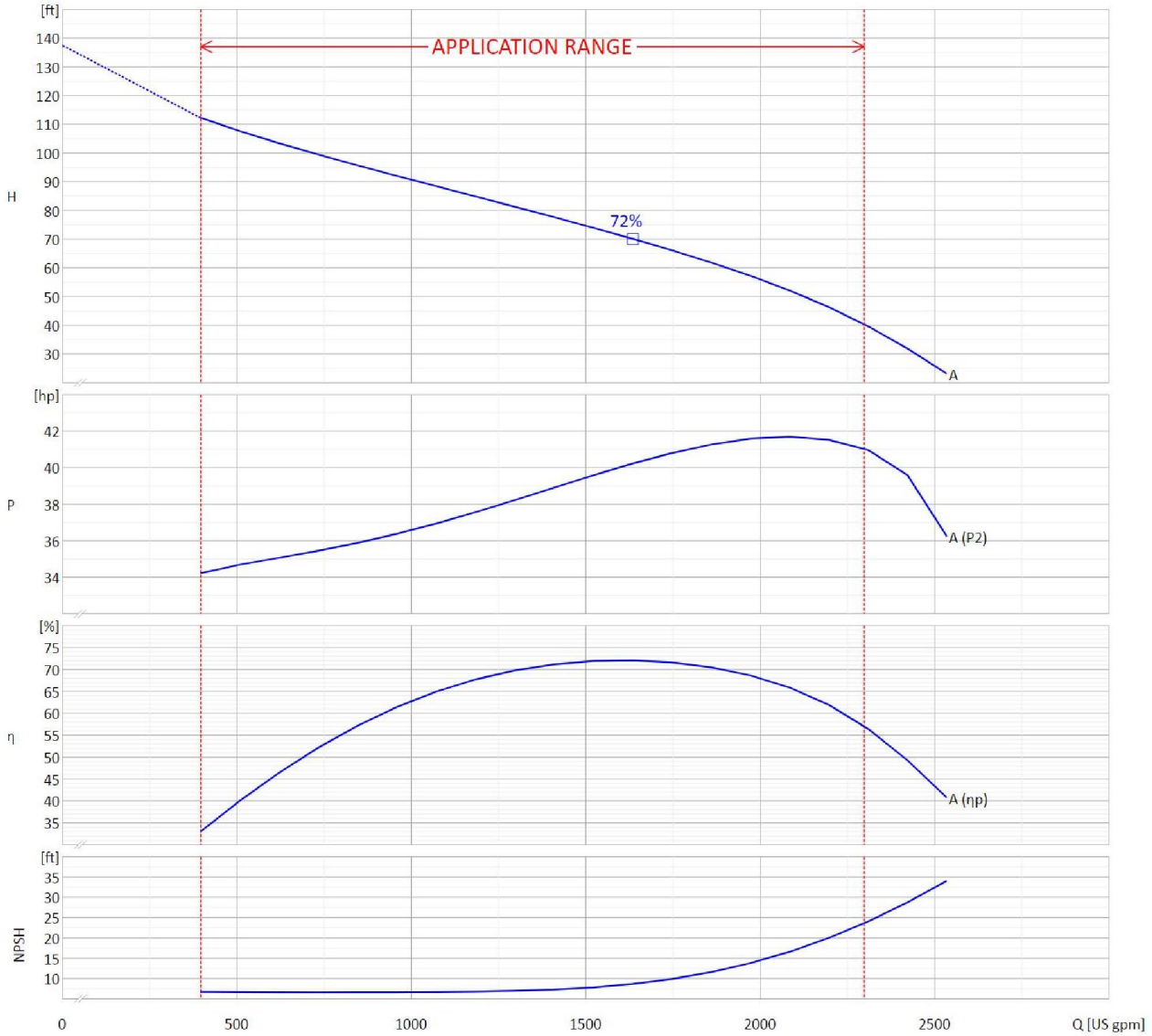

OPERATING DATA- ISO 9906:2012 3B -

Q [US gpm]	H [ft]	P [hp]	η [%]	NPSH [ft]	Speed [rpm]

WASTEWATER SOLUTIONS LLC

Arturo Garcia
102 NE 2nd Street, Suite 510
Boca Raton FL 33432
(954) 483 9269
arturo@wws-llc.com

DIMENSIONS

Flow rate	-	Head	-
Model	KSM150RA+034062N1		

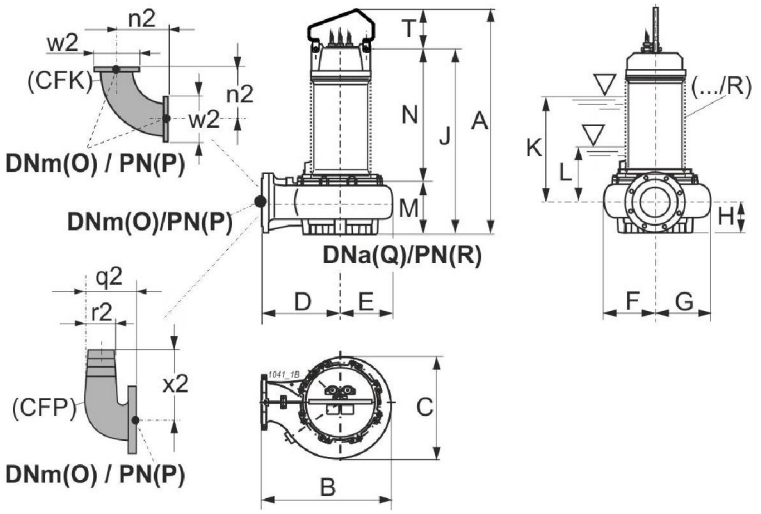

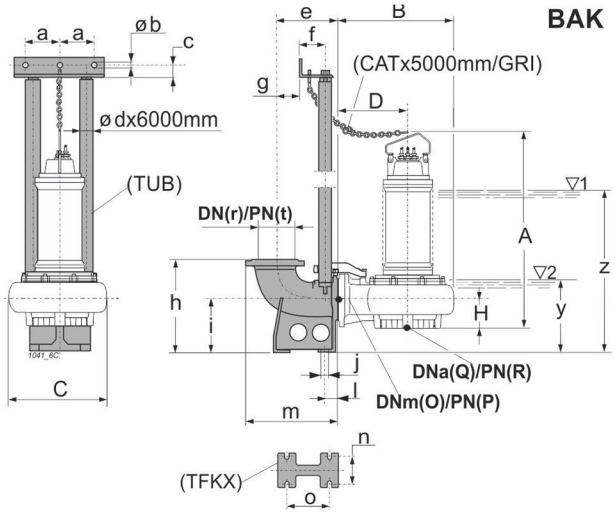

Dimensions [inch]

a	6.2	**K**	35.4	**x2**	15
A	61.4	**l**	3.1	**y**	17.5
b	0.5	**L**	6.1	**z**	46.9
B	32.5	**m**	21.9		
c	1.4	**M**	13.5		
C	26.4	**n**	8.3		
d	3"	**N**	37		
D	19.7	**n2**	15.6		
e	15.2	**o**	11		
E	12.8	**O**	5.9		
f	4.6	**P**	0.6		
F	12	**Q**	5.9		
g	7.1	**q2**	12.4		
G	14.4	**r**	7.9		
h	21.3	**R**	0.6		
H	7.7	**r2**	5.9		
i	11.4	**t**	0.4		
j	0.9	**T**	10.9		
J	50.5	**w2**	11.2		

WASTEWATER SOLUTIONS LLC
Arturo Garcia
102 NE 2nd Street, Suite 510
Boca Raton FL 33432
(954) 483 9269
arturo@wws-llc.com

TECHNICAL DATA SHEET

Customer:				Ref.:			
Item	6	Quantity	1	Required flow rate	-	Required head	-
Type	SUBMERSIBLE ELECTRIC PUMP FOR WASTE WATER			Model	KSM150RA+034062N1		

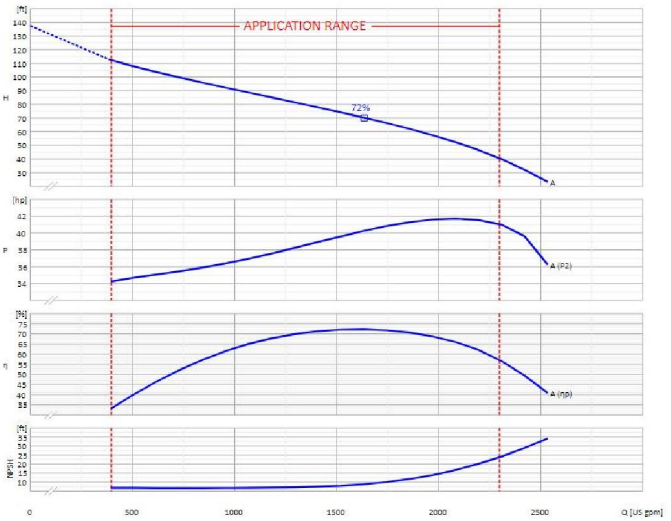

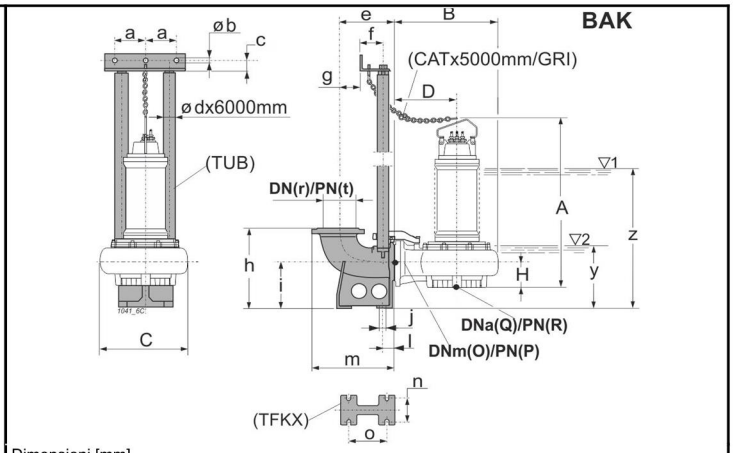

Dimensioni [mm]

a	6.2	**e**	15.2	**m**	21.9	**t**	0.4
A	61.4	**f**	4.6	**n**	8.3	**y**	17.5
b	0.5	**g**	7.1	**o**	11	**z**	46.9
B	32.5	**h**	21.3	**O**	5.9		
c	1.4	**H**	7.7	**P**	0.6		
C	26.4	**i**	11.4	**Q**	5.9		
d	3"	**j**	0.9	**r**	7.9		
D	19.7	**l**	3.1	**R**	0.6		

OPERATING DATA- ISO 9906:2012 3B -

Q [US gpm]	H [ft]	P [hp]	η [%]	NPSH [ft]

CONSTRUCTION CHARACTERISTICS

Delivery diameter		5.91		inch
Type of Impeller		Single channel		
Moment of inertia		1.92348 Kgm²		
Electric pump weight	Installation	723	88	Kg
Seal on pump side	Motor side	Mechanical		Mechanical
Type of installation		Vertical	BAKM/I	
Operation		Continuous (S1)		

OPERATING LIMITS

Pumped liquid	Waste water	
Max. temperature of pumped liquid	40	°C
Maximum density	62.427962	lb/ft³
Maximum viscosity	1.08E-05	ft²/s
Max. solid content	4	%
Max. number of starts/hr	10	
Free passage	4.02	inch
Minimum immersion depth	35.43	inch

OPERATING CHARACTERISTICS

Service flow rate		-		-
Service head		-		-
H (Q=0)	Hmax (Qmin)	137.5	112.2	ft
Qmin	Qmax	396.3	2298.3	US gpm
Power consumption at duty point		-		-
Max power consumption		41.7		hp
Pump efficiency	Overall	-	-	-
Sense of rotation (*)		Clockwise		
Number of pumps installed		Operating		Stand-by
		1		0

ELECTRIC PUMP MATERIALS

Delivery body	Cast iron
Support bearing	Nodular cast iron
Impeller	Cast iron
Oil box	Cast iron
Head cover	Cast iron
Impeller wear ring	Steel/Rubber
Cable clamp	Cast iron
Round power cable	-
Round auxiliary cable	-
Motor casing	Cast iron
Shaft	Stainless steel
Conductivity probe	-
Mechanical seal on pump side	Silicon carbide/silicon carbide
Mechanical seal on motor side	Stainless steel/graphite
Screws and nuts	Stainless steel

ELECTRIC MOTOR CHARACTERISTICS

Nominal power		45		hp
Rated frequency		60		Hz
Rated voltage		460		V
Rated current		58.8		A
No. Poles	Rotation speed	6	1175	rpm
Type of motor		3 ~		
Efficiency 4/4		87.0 %		
Power factor 4/4		0.840		
Is/In	Ts/Tn	6		-
Thermal protection		Klixon		
Insulation class		F		
Protection class		IP68		
Explosion-proof		n.a.		
Power supply cable	Length	H07RN-F	0.39	inch
Efficiency class	S.F.			1.15

WASTEWATER SOLUTIONS LLC
Arturo Garcia
102 NE 2nd Street, Suite 510
Boca Raton FL 33432
(954) 483 9269
arturo@wws-llc.com

CAPRARI SUBMERSIBLE PUMP MODEL KSM250ZA+034082N1



WASTEWATER SOLUTIONS LLC

Arturo Garcia
102 NE 2nd Street, Suite 510
Boca Raton FL 33432
(954) 483 9269
arturo@wws-llc.com

PERFORMANCE CURVES

Flow rate	-	Head requ.	-
Model	KSM250ZA+034082N1		

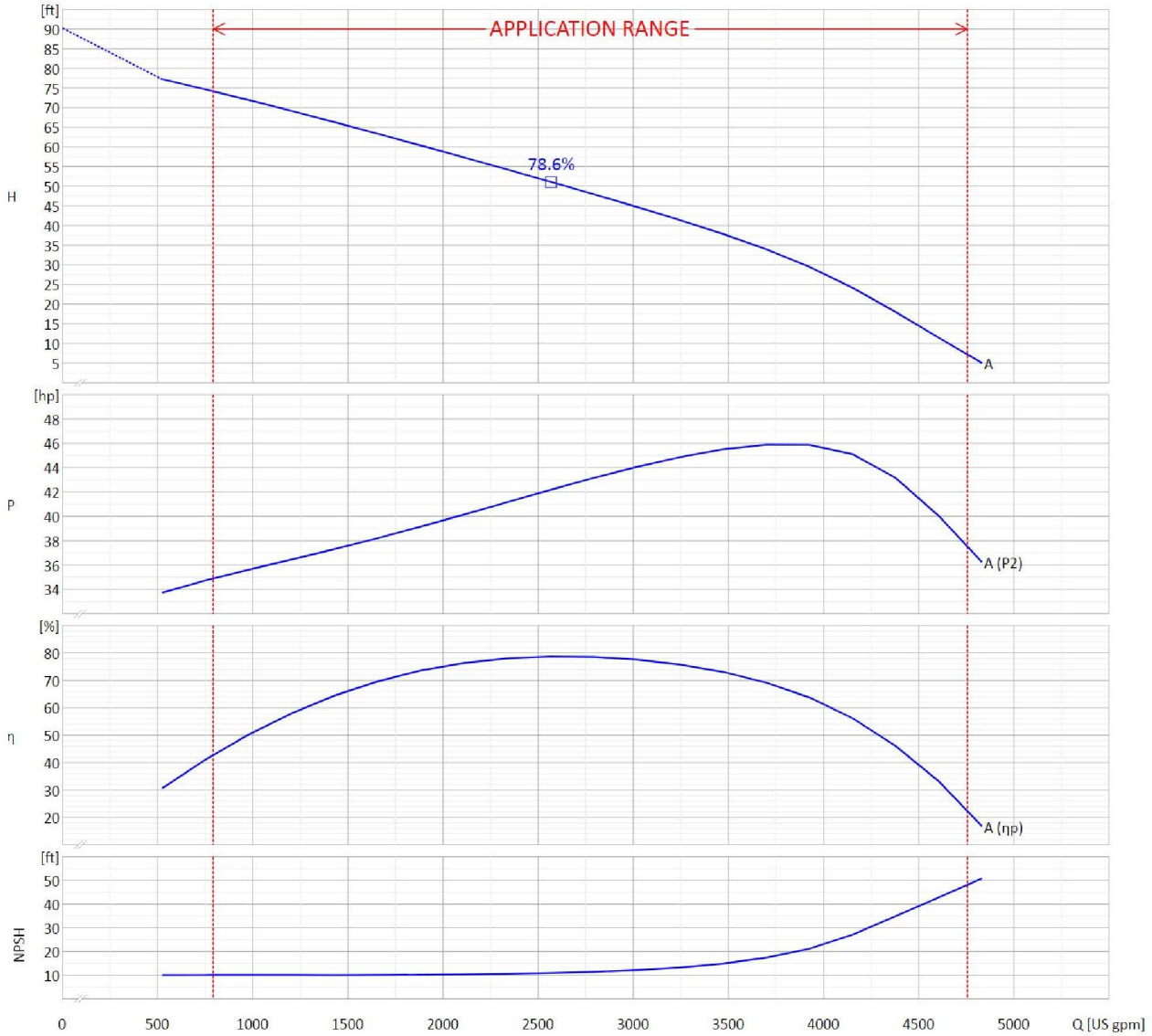

OPERATING DATA- ISO 9906:2012 3B -

Q [US gpm]	H [ft]	P [hp]	η [%]	NPSH [ft]	Speed [rpm]

WASTEWATER SOLUTIONS LLC

Arturo Garcia
102 NE 2nd Street, Suite 510
Boca Raton FL 33432
(954) 483 9269
arturo@wws-llc.com

DIMENSIONS

Flow rate	-	Head	-
Model	KSM250ZA+034082N1		

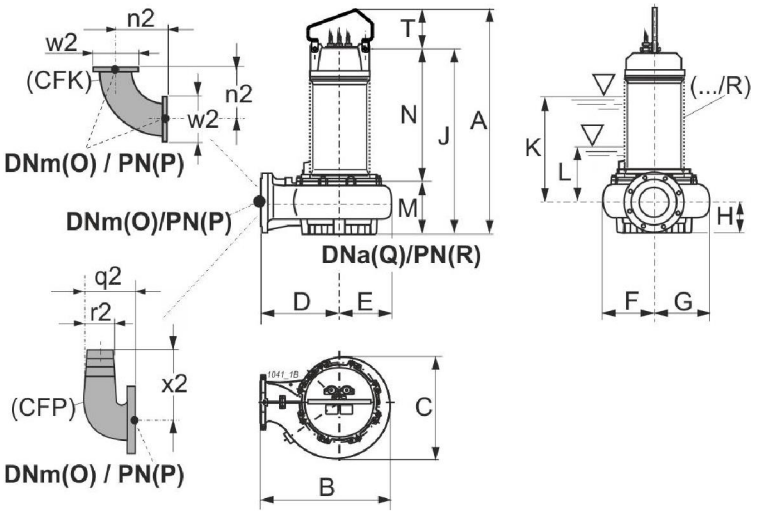

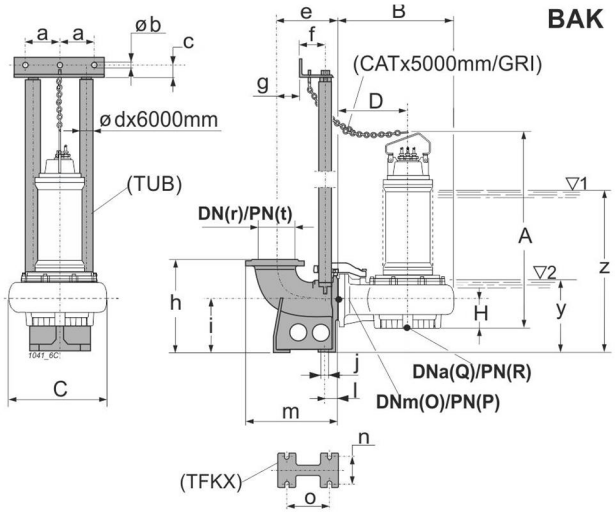

Dimensions [inch]

a	6.2	**K**	36.6	**x2**	22.6
A	64.4	**l**	3.3	**y**	23
b	0.5	**L**	7.3	**z**	52.4
B	36.8	**m**	26.5		
c	1.4	**M**	15.6		
C	28.9	**n**	12.2		
d	3"	**N**	37.5		
D	22.4	**n2**	15.2		
e	17.7	**o**	16.7		
E	14.4	**O**	9.8		
f	4.6	**P**	0.4		
F	13	**Q**	9.8		
g	9.6	**q2**	20.7		
G	15.9	**r**	11.8		
h	27.6	**R**	0.4		
H	8.7	**r2**	9.8		
i	15.7	**t**	0.4		
j	0.9	**T**	11.3		
J	53	**w2**	15.6		

WASTEWATER SOLUTIONS LLC
Arturo Garcia
102 NE 2nd Street, Suite 510
Boca Raton FL 33432
(954) 483 9269
arturo@wws-llc.com

TECHNICAL DATA SHEET

Customer:				Ref.:			
Item	7	Quantity	1	Required flow rate	-	Required head	-
Type	SUBMERSIBLE ELECTRIC PUMP FOR WASTE WATER			Model	KSM250ZA+034082N1		

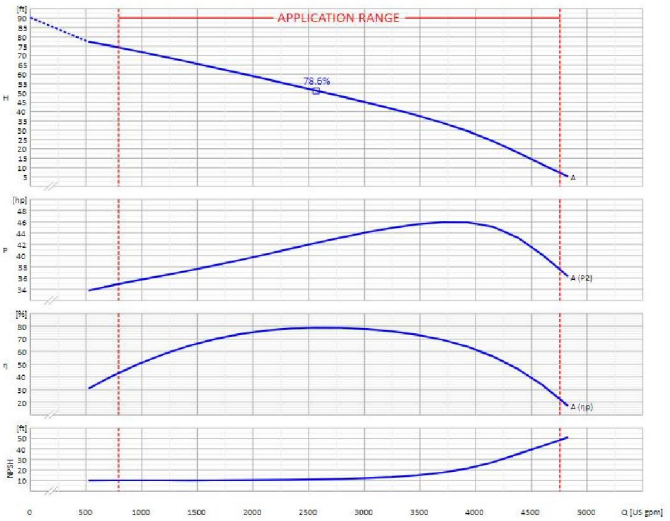

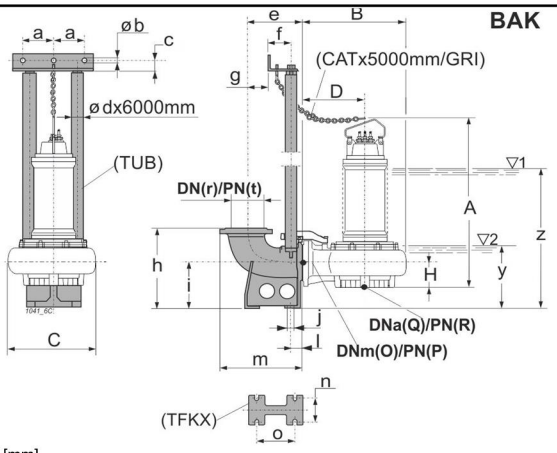

Dimensioni [mm]

a	6.2	**e**	17.7	**m**	26.5	**t**	0.4
A	64.4	**f**	4.6	**n**	12.2	**y**	23
b	0.5	**g**	9.6	**o**	16.7	**z**	52.4
B	36.8	**h**	27.6	**O**	9.8		
c	1.4	**H**	8.7	**P**	0.4		
C	28.9	**i**	15.7	**Q**	9.8		
d	3"	**j**	0.9	**r**	11.8		
D	22.4	**l**	3.3	**R**	0.4		

OPERATING DATA- ISO 9906:2012 3B -

Q [US gpm]	H [ft]	P [hp]	η [%]	NPSH [ft]

CONSTRUCTION CHARACTERISTICS

Delivery diameter		9.84		inch
Type of Impeller		Single channel		
Moment of inertia		2.92112 Kgm²		
Electric pump weight	Installation	873	160	Kg
Seal on pump side	Motor side	Mechanical		Mechanical
Type of installation		Vertical	BAK300/250	
Operation		Continuous (S1)		

OPERATING LIMITS

Pumped liquid	Waste water	
Max. temperature of pumped liquid	40	°C
Maximum density	62.427962	lb/ft³
Maximum viscosity	1.08E-05	ft²/s
Max. solid content	4	%
Max. number of starts/hr	10	
Free passage	6.42	inch
Minimum immersion depth	36.61	inch

OPERATING CHARACTERISTICS

Service flow rate		-		-
Service head		-		-
H (Q=0)	Hmax (Qmin)	90.3	74.1	ft
Qmin	Qmax	792.5	4755.1	US gpm
Power consumption at duty point		-		-
Max power consumption		45.9		hp
Pump efficiency	Overall	-	-	-
Sense of rotation (*)		Clockwise		
Number of pumps installed		Operating		Stand-by
		1		0

ELECTRIC PUMP MATERIALS

Delivery body	Cast iron
Support bearing	Nodular cast iron
Impeller	Cast iron
Oil box	Cast iron
Head cover	Cast iron
Impeller wear ring	Steel/Rubber
Cable clamp	Cast iron
Round power cable	-
Round auxiliary cable	-
Motor casing	Cast iron
Shaft	Stainless steel
Conductivity probe	-
Mechanical seal on pump side	Silicon carbide/silicon carbide
Mechanical seal on motor side	Stainless steel/graphite
Screws and nuts	Stainless steel

ELECTRIC MOTOR CHARACTERISTICS

Nominal power		45		hp
Rated frequency		60		Hz
Rated voltage		460		V
Rated current		69.3		A
No. Poles	Rotation speed	8	880	rpm
Type of motor		3 ~		
Efficiency 4/4		85.0 %		
Power factor 4/4		0.730		
Is/In	Ts/Tn	4.4		-
Thermal protection		Klixon		
Insulation class		F		
Protection class		IP68		
Explosion-proof		n.a.		
Power supply cable	Length	H07RN-F	0.39	inch
Efficiency class	S.F.			1.15

WASTEWATER SOLUTIONS LLC
Arturo Garcia
102 NE 2nd Street, Suite 510
Boca Raton FL 33432
(954) 483 9269
arturo@wws-llc.com

102 NE 2nd Street
Suite 510
Boca Raton FL 33432
(954) 483 9269 Cell
arturo@wws-llc.com
meredith@wws-llc.com
wws-llc.com

WASTEWATER SOLUTIONS REFERENCES OF PAST PERFORMANCE

Shelly D. Glenn
Contract Specialist, Branch III, Div V
U.S. DEPARTMENT OF THE INTERIOR
7301 W. Mansfield Ave, MS D2940
Lakewood, CO 80235
Phone: 303-980-3875
Email: shelly_glenn@ibc.doi.gov

Jennifer Garcia
BUREAU OF RECLAMATION
HOOVER DAM
Lower Colorado Region-Yuma Area Office
7301 Calle Agua Salada
Yuma, AZ 85634
Phone: 928-343-8128
Email: jgarcia@usbr.gov

Andres Delgado
Director Of Public Works
CITY OF HIALEAH GARDENS
13601 N.W. 107th Avenue
Hialeah Gardens, Florida 33018
Phone: 305-877-8273
Email: adelgado@cityofhialeahgardens.com

Luis Montoya
Water Treatment Plant Operations Superintendent
CITY OF HOLLYWOOD
DEPARTMENT OF PUBLIC UTILITIES
3441 Hollywood Blvd.
Hollywood, Florida 33021
Phone: 954-967-4230
Email: lmontoya@hollywoodfl.org

Meg Ankrom
Contract Performance Specialist
US ARMY CORPS OF ENGINEERS
ICE HARBOR PROJECT
2763 Monument Drive
Burbank, WA 99323
Phone: 509-543-3255
Email: Meg.m.ankrom@usace.army.mil

Rick Giangrande
Fleet Acquisition Specialist
PASCO COUNTY
7578 State Street
New Port Richey, Florida 34654
Phone: 727-834-3739 Ext.7536
Email: Rgiangrande@pascocountyfl.net

SK3 Chelsea Pincay
US COAST GUARD
USCG BASE NEW ORLEANS
1790 Saturn Blvd.
New Orleans LA 70129
Phone: 504-253-4896
Email: Chelsea.L.Pincay@uscg.mil

Lonnie Sullivan
Maintenance Mechanic
NATIONAL FISH AND WILDLIFE SERVICE
COLEMAN FISH HATCHERY
24411 Coleman Fish Hatchery Rd
Anderson, California 96007
Phone: 530 365-8622
Email: Lonnie_Sullivan@fws.gov

Derek R. Sanders
Maintenance supervisor
HENDERSON WATER UTILITY
205 Drury Lane
Henderson, KY 42420
Phone: 270-869-6595
Email: sandersd@hkywater.org

Jeremy Chaja
Chief Plant Operator
LAGUNA COUNTY SANITATION DISTRICT
SANTA BARBARA COUNTY, CALIFORNIA
3500 BLACK RD
SANTA MARIA, CA 93455
Phone: 805-934-6282
Email: jchaja@cosbpw.net

Jayne l. Prindible
AMPS, INC.
AQUIFER MAINTENANCE & PERFORMANCE SYSTEMS, INC.
7146 Haverhill Road N.
West Palm Beach, FL 33407
Phone: 954-967-4230
Email: ampsjlp@gmail.com

Kyle Wilson
Utilities Maintenance Manager
UTILITIES & ENERGY – CPFM
UNIVERSITY OF OREGON
1295 Franklin Avenue
Eugene, Oregon 97403
Phone: 541-346-2246
Email: rwilson2@uoregon.edu

Marcus Spiegelberg
Director Of Operations
DOUGLAS ORR PLUMBING
301 Flagler Drive Miami Springs, Fl. 33166
Phone: (305) 887-1687
Email: marcus@orrplumbing.com

Ronnie S. Navarro,
Pe Deputy Director / City Engineer
CITY OF DANIA BEACH
rnavarro@daniabeachfl.gov
Public Services Department
1201 Stirling Road
Dania Beach, FL 33004
Phone: 954-924-6808

Robert Shaw
FLORIDA POWER AND LIGHT
700 Universe Blvd.
Juno Beach, FL 33408
Phone: 561-818-1668
Email: robert.shaw@fpl.com

FOR OFFICIAL USE ONLY / SOURCE SELECTION INFORMATION - SEE FAR 2.101, 3.104, AND 42.1503

CONTRACTOR PERFORMANCE ASSESSMENT REPORT (CPAR)

Nonsystems

Name/Address of Contractor:

Company Name: WASTEWATER SOLUTIONS LLC

Division Name:

Street Address: 14031 SW 143 CT STE 6

City: MIAMI

State/Province: FL Zip Code: 331865745

Country: USA

CAGE Code:

DUNS Number: 079918568

PSC: 4320 NAICS Code: 333996

Evaluation Type: Final

Contract Percent Complete:

Period of Performance Being Assessed: 06/19/2018 - 11/16/2018

Contract Number: 140R3018P0065 **Business Sector & Sub-Sector:** Nonsystems - Facilities Supplies

Contracting Office: LOWER COLORADO REGIONAL OFFICE **Contracting Officer:** VIRGINIA TOLEDO **Phone Number:** 928-343-8136

Location of Work:

Award Date: 06/19/2018 **Effective Date:** 06/19/2018

Completion Date: 11/09/2018 **Estimated/Actual Completion Date:** 11/16/2018

Total Dollar Value: **Current Contract Dollar Value:**

Complexity: Low **Termination Type:** None

Competition Type: Competed under SAP **Contract Type:** Firm Fixed Price

Key Subcontractors and Effort Performed:

DUNS:

Effort:

DUNS:

Effort:

DUNS:

Effort:

Project Number:

Project Title:

Replacement of Vertical Turbine Pumps

Contract Effort Description:

Supply three vertical turbine pumps for the Hoover Dam sump

Small Business Subcontracting:

Does this contract include a subcontracting plan? No

Date of last Individual Subcontracting Report (ISR) / Summary Subcontracting Report (SSR): N/A

Evaluation Areas	Past Rating	Rating
Quality:	N/A	Satisfactory
Schedule:	N/A	Satisfactory
Cost Control:	N/A	N/A
Management:	N/A	Satisfactory
Small Business Subcontracting:	N/A	N/A
Regulatory Compliance:	N/A	Satisfactory
Other Areas:		
(1) :		N/A
(2) :		N/A
(3) :		N/A

FOR OFFICIAL USE ONLY

FOR OFFICIAL USE ONLY / SOURCE SELECTION INFORMATION - SEE FAR 2.101, 3.104, AND 42.1503

Variance (Contract to Date):

Current Cost Variance (%): Variance at Completion (%):

Current Schedule Variance (%):

Assessing Official Comments:

QUALITY: Contractor furnished equipment that met all salient characteristics

SCHEDULE: Contractor delivered the equipment within a week of the Period of Performance

MANAGEMENT: Contractor communicated in a cordial manner; sought clarifications and Government approval of design as needed; and sent periodic progress updates.

REGULATORY COMPLIANCE: The Contractor complied with all contractual requirements.

RECOMMENDATION:

Given what I know today about the contractor's ability to perform in accordance with this contract or order's most significant requirements, I would recommend them for similar requirements in the future.

Name and Title of Assessing Official:

Name: VIRGINIA TOLEDO

Title: Contracting Officer

Organization: BOR - Yuma Area Office

Phone Number: (928) 343-8136 Email Address: vtoledo@usbr.gov

Date: 11/28/2018

Contractor Comments:

ADDITIONAL/OTHER: Contractor agrees with the ratings assigned.

CONCURRENCE: I concur with this evaluation.

Name and Title of Contractor Representative:

Name: MEREDITH RAE

Title: Vice President

Phone Number: 6467653799 Email Address: meredith@wws-llc.com

Date: 11/28/2018

Review by Reviewing Official:

Review by Reviewing Official not required.

Name and Title of Reviewing Official:

Name:

Title:

Organization:

Phone Number: Email Address:

Date:

FOR OFFICIAL USE ONLY

State of Florida

Minority Business Certification

Wastewater Solutions, LLC

Is certified under the provisions of
287 and 295.187, Florida Statutes, for a period from:
01/08/2021 to 01/08/2023

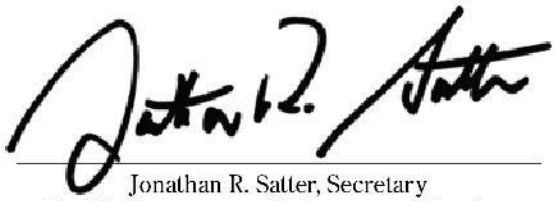

Jonathan R. Satter, Secretary
Florida Department of Management Services

Department of MANAGEMENT SERVICES
Office of Supplier Diversity

Office of Supplier Diversity
4050 Esplanade Way, Suite 380
Tallahassee, FL 32399
850-487-0915
www.dms.myflorida.com/osd

State of Florida
Department of State

I certify from the records of this office that WASTEWATER SOLUTIONS LLC is a limited liability company organized under the laws of the State of Florida, filed on August 14, 2014.

The document number of this limited liability company is L14000127855.

I further certify that said limited liability company has paid all fees due this office through December 31, 2021, that its most recent annual report was filed on February 4, 2021, and that its status is active.

Given under my hand and the Great Seal of the State of Florida at Tallahassee, the Capital, this the Fourth day of February, 2021

GREAT SEAL OF THE STATE OF FLORIDA
IN GOD WE TRUST

Secretary of State

Tracking Number: 2425116811CC

To authenticate this certificate,visit the following site,enter this number, and then follow the instructions displayed.

https://services.sunbiz.org/Filings/CertificateOfStatus/CertificateAuthentication

CERTIFICATE OF LIABILITY INSURANCE

DATE (MM/DD/YYYY): 03/07/2022

THIS CERTIFICATE IS ISSUED AS A MATTER OF INFORMATION ONLY AND CONFERS NO RIGHTS UPON THE CERTIFICATE HOLDER. THIS CERTIFICATE DOES NOT AFFIRMATIVELY OR NEGATIVELY AMEND, EXTEND OR ALTER THE COVERAGE AFFORDED BY THE POLICIES BELOW. THIS CERTIFICATE OF INSURANCE DOES NOT CONSTITUTE A CONTRACT BETWEEN THE ISSUING INSURER(S), AUTHORIZED REPRESENTATIVE OR PRODUCER, AND THE CERTIFICATE HOLDER.

IMPORTANT: If the certificate holder is an ADDITIONAL INSURED, the policy(ies) must have ADDITIONAL INSURED provisions or be endorsed. If SUBROGATION IS WAIVED, subject to the terms and conditions of the policy, certain policies may require an endorsement. A statement on this certificate does not confer rights to the certificate holder in lieu of such endorsement(s).

PRODUCER Liberty Mutual Insurance PO Box 188065 Fairfield OH 45018	**CONTACT NAME:** **PHONE (A/C, No, Ext):** 800-962-7132 **FAX (A/C, No):** 800-845-3666 **E-MAIL ADDRESS:** BusinessService@LibertyMutual.com
INSURED Wastewater Solutions Llc 102 Ne 2nd St Ste 510 Boca Raton FL 33432	**INSURER(S) AFFORDING COVERAGE** / **NAIC #** **INSURER A :** Ohio Security Insurance Company / 24082 **INSURER B :** **INSURER C :** **INSURER D :** **INSURER E :** **INSURER F :**

COVERAGES **CERTIFICATE NUMBER:** 0005794508 **REVISION NUMBER:**

THIS IS TO CERTIFY THAT THE POLICIES OF INSURANCE LISTED BELOW HAVE BEEN ISSUED TO THE INSURED NAMED ABOVE FOR THE POLICY PERIOD INDICATED. NOTWITHSTANDING ANY REQUIREMENT, TERM OR CONDITION OF ANY CONTRACT OR OTHER DOCUMENT WITH RESPECT TO WHICH THIS CERTIFICATE MAY BE ISSUED OR MAY PERTAIN, THE INSURANCE AFFORDED BY THE POLICIES DESCRIBED HEREIN IS SUBJECT TO ALL THE TERMS, EXCLUSIONS AND CONDITIONS OF SUCH POLICIES. LIMITS SHOWN MAY HAVE BEEN REDUCED BY PAID CLAIMS.

INSR LTR	TYPE OF INSURANCE	ADDL INSD	SUBR WVD	POLICY NUMBER	POLICY EFF (MM/DD/YYYY)	POLICY EXP (MM/DD/YYYY)	LIMITS	
A	[X] **COMMERCIAL GENERAL LIABILITY** [ ] CLAIMS-MADE [X] OCCUR GEN'L AGGREGATE LIMIT APPLIES PER: [X] POLICY [X] PRO-JECT [ ] LOC [ ] OTHER:	X	X	BKS58450670	12/05/2021	12/05/2022	EACH OCCURRENCE DAMAGE TO RENTED PREMISES (Ea occurrence) MED EXP (Any one person) PERSONAL & ADV INJURY GENERAL AGGREGATE PRODUCTS - COMP/OP AGG	$ 1000000 $ 300000 $ 15000 $ 1000000 $ 2000000 $ 2000000
	AUTOMOBILE LIABILITY [ ] ANY AUTO [ ] OWNED AUTOS ONLY [ ] SCHEDULED AUTOS [ ] HIRED AUTOS ONLY [ ] NON-OWNED AUTOS ONLY						COMBINED SINGLE LIMIT (Ea accident) BODILY INJURY (Per person) BODILY INJURY (Per accident) PROPERTY DAMAGE (Per accident)	$ $ $ $
	[ ] **UMBRELLA LIAB** [ ] OCCUR [ ] **EXCESS LIAB** [ ] CLAIMS-MADE [ ] DED [ ] RETENTION $						EACH OCCURRENCE AGGREGATE	$ $
	WORKERS COMPENSATION AND EMPLOYERS' LIABILITY Y / N ANYPROPRIETOR/PARTNER/EXECUTIVE OFFICER/MEMBER EXCLUDED? [ ] N / A **(Mandatory in NH)** If yes, describe under DESCRIPTION OF OPERATIONS below						[ ] PER STATUTE [ ] OTH-ER E.L. EACH ACCIDENT E.L. DISEASE - EA EMPLOYEE E.L. DISEASE - POLICY LIMIT	 $ $ $

DESCRIPTION OF OPERATIONS / LOCATIONS / VEHICLES (ACORD 101, Additional Remarks Schedule, may be attached if more space is required)

Proof of Insurance

CERTIFICATE HOLDER

Wastewater Solutions Llc
102 Ne 2nd St Ste 510
Boca Raton FL 33432

CANCELLATION

SHOULD ANY OF THE ABOVE DESCRIBED POLICIES BE CANCELLED BEFORE THE EXPIRATION DATE THEREOF, NOTICE WILL BE DELIVERED IN ACCORDANCE WITH THE POLICY PROVISIONS.

AUTHORIZED REPRESENTATIVE



© 1988-2015 ACORD CORPORATION. All rights reserved.

Form **W-9**
(Rev. November 2017)
Department of the Treasury
Internal Revenue Service

Request for Taxpayer Identification Number and Certification

▶ **Go to *www.irs.gov/FormW9* for instructions and the latest information.**

Give Form to the requester. Do not send to the IRS.

Print or type. See **Specific Instructions** on page 3.

1 Name (as shown on your income tax return). Name is required on this line; do not leave this line blank.

WASTEWATER SOLUTIONS, LLC

2 Business name/disregarded entity name, if different from above

3 Check appropriate box for federal tax classification of the person whose name is entered on line 1. Check only **one** of the following seven boxes.

☐ Individual/sole proprietor or single-member LLC ☐ C Corporation ☐ S Corporation ☐ Partnership ☐ Trust/estate

☑ Limited liability company. Enter the tax classification (C=C corporation, S=S corporation, P=Partnership) ▶ S

Note: Check the appropriate box in the line above for the tax classification of the single-member owner. Do not check LLC if the LLC is classified as a single-member LLC that is disregarded from the owner unless the owner of the LLC is another LLC that is **not** disregarded from the owner for U.S. federal tax purposes. Otherwise, a single-member LLC that is disregarded from the owner should check the appropriate box for the tax classification of its owner.

☐ Other (see instructions) ▶

4 Exemptions (codes apply only to certain entities, not individuals; see instructions on page 3):

Exempt payee code (if any) _____

Exemption from FATCA reporting code (if any) _____

(Applies to accounts maintained outside the U.S.)

5 Address (number, street, and apt. or suite no.) See instructions.

102 NE 2ND STREET, #510

Requester's name and address (optional)

6 City, state, and ZIP code

BOCA RATON, FL 33432

7 List account number(s) here (optional)

Part I Taxpayer Identification Number (TIN)

Enter your TIN in the appropriate box. The TIN provided must match the name given on line 1 to avoid backup withholding. For individuals, this is generally your social security number (SSN). However, for a resident alien, sole proprietor, or disregarded entity, see the instructions for Part I, later. For other entities, it is your employer identification number (EIN). If you do not have a number, see *How to get a TIN*, later.

Note: If the account is in more than one name, see the instructions for line 1. Also see *What Name and Number To Give the Requester* for guidelines on whose number to enter.

Social security number

			–			–				

or

Employer identification number

4	7	–	1	8	7	7	6	4	1

Part II Certification

Under penalties of perjury, I certify that:

1. The number shown on this form is my correct taxpayer identification number (or I am waiting for a number to be issued to me); and
2. I am not subject to backup withholding because: (a) I am exempt from backup withholding, or (b) I have not been notified by the Internal Revenue Service (IRS) that I am subject to backup withholding as a result of a failure to report all interest or dividends, or (c) the IRS has notified me that I am no longer subject to backup withholding; and
3. I am a U.S. citizen or other U.S. person (defined below); and
4. The FATCA code(s) entered on this form (if any) indicating that I am exempt from FATCA reporting is correct.

Certification instructions. You must cross out item 2 above if you have been notified by the IRS that you are currently subject to backup withholding because you have failed to report all interest and dividends on your tax return. For real estate transactions, item 2 does not apply. For mortgage interest paid, acquisition or abandonment of secured property, cancellation of debt, contributions to an individual retirement arrangement (IRA), and generally, payments other than interest and dividends, you are not required to sign the certification, but you must provide your correct TIN. See the instructions for Part II, later.

Sign Here | **Signature of U.S. person** ▶ [signature] | **Date** ▶ **02/04/2022**

General Instructions

Section references are to the Internal Revenue Code unless otherwise noted.

Future developments. For the latest information about developments related to Form W-9 and its instructions, such as legislation enacted after they were published, go to *www.irs.gov/FormW9.*

Purpose of Form

An individual or entity (Form W-9 requester) who is required to file an information return with the IRS must obtain your correct taxpayer identification number (TIN) which may be your social security number (SSN), individual taxpayer identification number (ITIN), adoption taxpayer identification number (ATIN), or employer identification number (EIN), to report on an information return the amount paid to you, or other amount reportable on an information return. Examples of information returns include, but are not limited to, the following.

- Form 1099-INT (interest earned or paid)
- Form 1099-DIV (dividends, including those from stocks or mutual funds)
- Form 1099-MISC (various types of income, prizes, awards, or gross proceeds)
- Form 1099-B (stock or mutual fund sales and certain other transactions by brokers)
- Form 1099-S (proceeds from real estate transactions)
- Form 1099-K (merchant card and third party network transactions)
- Form 1098 (home mortgage interest), 1098-E (student loan interest), 1098-T (tuition)
- Form 1099-C (canceled debt)
- Form 1099-A (acquisition or abandonment of secured property)

Use Form W-9 only if you are a U.S. person (including a resident alien), to provide your correct TIN.

If you do not return Form W-9 to the requester with a TIN, you might be subject to backup withholding. See What is backup withholding, *later.*

BID SUBMITTAL SIGNATURE PAGE – ITB # 2022B-010

ITEM	DESCRIPTION	UNIT PRICE
1.	Pumps (% Discount from Current MSRP)	% Ø
2.	Parts and Materials (% Discount from Current M	% Ø
3.	Hourly Rate for Repairs ($/HR)	$ 115.00

*** PLEASE AFFIX SIGNATURE WHERE INDICATED**

(FAILURE TO DO SO SHALL RESULT IN THE REJECTION OF YOUR ITB)

By signature on this document, Bidder acknowledges and agrees that its offer includes and accepts all terms, conditions, and specifications of the Village's ITB solicitation as originally published, without exception, change or alteration of any kind, except as may have been published by the Village in official amendments prior to the submission time.

FIRM NAME: **(Enter the entire legal name of the quoting entity)**
Hudson Pump & Equipment (A Division of Tencarva Machinery)

DATE: 4/21/22

* **SIGNATURE:** Larry Strickland Jr.

PRINT NAME: Larry Strickland Jr.

PRINT TITLE: Sales Engineer

ADDRESS: 3524 Craftsman Blvd.

CITY / STATE: Lakeland, FL ZIP CODE: 33803

TELEPHONE # (863) 665-7867

TOLL FREE # (800) 780-7867

E-MAIL: lstrickland@tencarva.com

FAX #: (863) 667-2951

APPLICABLE LICENSE(S) NUMBER # 17861 TYPE: Occupational Class A

FEDERAL ID # 56-1198229

BID SUBMITTAL SIGNATURE PAGE – ITB # 2022B-010

*** PLEASE AFFIX SIGNATURE WHERE INDICATED**
(FAILURE TO DO SO SHALL RESULT IN THE REJECTION OF YOUR ITB)

By signature on this document, Bidder acknowledges and agrees that its offer includes and accepts all terms, conditions, and specifications of the Village's ITB solicitation as originally published, without exception, change or alteration of any kind, except as may have been published by the Village in official amendments prior to the submission time.

FIRM NAME: (Enter the entire legal name of the quoting entity) Hudson Pump & Equipment (A Division of Tencarva Machinery)	DATE: 4/21/22
* SIGNATURE: Larry Strickland Jr.	PRINT NAME: Larry Strickland Jr. PRINT TITLE: Sales Engineer
ADDRESS: 3524 Craftsman Blvd. CITY / STATE: Lakeland, FL 33803	ZIP CODE: 33803
TELEPHONE # (863) 665-7867 TOLL FREE # (800) 780-7867	E-MAIL: lstrickland@tencarva.com FAX #: (863) 667-2951
APPLICABLE LICENSE(S) NUMBER # 17861	TYPE: Occupational Class A
FEDERAL ID # 56-1198229	

CONFLICT OF INTEREST DISCLOSURE FORM

The award of this contract is subject to the provisions of Chapter 112, *Florida Statutes*. All Bidders must disclose within their Bid: the name of any officer, director, or agent who is also an employee of the Village of Palm Springs.

Furthermore, all Bidder must disclose the name of any Village employee who owns, directly, or indirectly, an interest of more than five percent (5%) in the Bidder's firm or any of its branches.

The purpose of this disclosure form is to give the Village the information needed to identify potential conflicts of interest for evaluation team members and other key personnel involved in the award of this contract.

The term "conflict of interest" refers to situations in which financial or other personal considerations may adversely affect, or have the appearance of adversely affecting, an employee's professional judgment in exercising any Village duty or responsibility in administration, management, instruction, research, or other professional activities.

Please check one of the following statements and attach additional documentation if necessary:

✓ To the best of our knowledge, the undersigned firm has no potential conflict of interest due to any other Cities, Counties, contracts, or property interest for this Bid.

The undersigned firm, by attachment to this form, submits information which may be a potential conflict of interest due to other Cities, Counties, contracts, or property interest for this Bid.

Acknowledged by: Larry Strickland Jr.

Firm Name: Hudson Pump & Equipment

Signature: Larry Strickland Jr.

Name and Title (Print or Type): Larry Strickland Jr. Sales Engineer

Date: 4/21/22

CERTIFICATE OF LIABILITY INSURANCE

DATE (MM/DD/YYYY): 4/21/2022

THIS CERTIFICATE IS ISSUED AS A MATTER OF INFORMATION ONLY AND CONFERS NO RIGHTS UPON THE CERTIFICATE HOLDER. THIS CERTIFICATE DOES NOT AFFIRMATIVELY OR NEGATIVELY AMEND, EXTEND OR ALTER THE COVERAGE AFFORDED BY THE POLICIES BELOW. THIS CERTIFICATE OF INSURANCE DOES NOT CONSTITUTE A CONTRACT BETWEEN THE ISSUING INSURER(S), AUTHORIZED REPRESENTATIVE OR PRODUCER, AND THE CERTIFICATE HOLDER.

IMPORTANT: If the certificate holder is an ADDITIONAL INSURED, the policy(ies) must have ADDITIONAL INSURED provisions or be endorsed. If SUBROGATION IS WAIVED, subject to the terms and conditions of the policy, certain policies may require an endorsement. A statement on this certificate does not confer rights to the certificate holder in lieu of such endorsement(s).

PRODUCER
Marsh & McLennan Agency LLC
3625 N. Elm Street
Greensboro NC 27455

CONTACT NAME: Kelly S. Whitener, CIC, CISR
PHONE (A/C, No, Ext): 336 346-1329 **FAX (A/C, No):** 336 346-1397
E-MAIL ADDRESS: Kelly.Whitener@MarshMMA.com

INSURER(S) AFFORDING COVERAGE	NAIC #
INSURER A: Zurich American Insurance Company	16535
INSURER B: American Zurich Insurance Company	40142
INSURER C: Hanover Insurance Company	22292
INSURER D: Illinois Union Insurance Company	27960
INSURER E: Travelers Prop & Casualty Co of America	25674
INSURER F:	

INSURED TENCAMACHI
Tencarva Machinery Company
See Attachment for Extension of Named Insureds
1115 Pleasant Ridge Road
Greensboro NC 27409

COVERAGES **CERTIFICATE NUMBER:** 1750129243 **REVISION NUMBER:**

THIS IS TO CERTIFY THAT THE POLICIES OF INSURANCE LISTED BELOW HAVE BEEN ISSUED TO THE INSURED NAMED ABOVE FOR THE POLICY PERIOD INDICATED. NOTWITHSTANDING ANY REQUIREMENT, TERM OR CONDITION OF ANY CONTRACT OR OTHER DOCUMENT WITH RESPECT TO WHICH THIS CERTIFICATE MAY BE ISSUED OR MAY PERTAIN, THE INSURANCE AFFORDED BY THE POLICIES DESCRIBED HEREIN IS SUBJECT TO ALL THE TERMS, EXCLUSIONS AND CONDITIONS OF SUCH POLICIES. LIMITS SHOWN MAY HAVE BEEN REDUCED BY PAID CLAIMS.

INSR LTR	TYPE OF INSURANCE	ADDL INSD	SUBR WVD	POLICY NUMBER	POLICY EFF (MM/DD/YYYY)	POLICY EXP (MM/DD/YYYY)	LIMITS	
A	X COMMERCIAL GENERAL LIABILITY CLAIMS-MADE / X OCCUR GEN'L AGGREGATE LIMIT APPLIES PER: POLICY / X PRO-JECT / X LOC OTHER:			GLO561122607	1/1/2022	1/1/2023	EACH OCCURRENCE DAMAGE TO RENTED PREMISES (Ea occurrence) MED EXP (Any one person) PERSONAL & ADV INJURY GENERAL AGGREGATE PRODUCTS - COMP/OP AGG $	$ 2,000,000 $ 500,000 $ 10,000 $ 2,000,000 $ 4,000,000 $ 4,000,000 $
A	AUTOMOBILE LIABILITY X ANY AUTO OWNED AUTOS ONLY / SCHEDULED AUTOS X HIRED AUTOS ONLY / X NON-OWNED AUTOS ONLY			BAP561122707	1/1/2022	1/1/2023	COMBINED SINGLE LIMIT (Ea accident) BODILY INJURY (Per person) BODILY INJURY (Per accident) PROPERTY DAMAGE (Per accident) $	$ 2,000,000 $ $ $ $
E	X UMBRELLA LIAB / X OCCUR X EXCESS LIAB / CLAIMS-MADE DED / X RETENTION $ 10,000			CUP8S26447122NF	1/1/2022	1/1/2023	EACH OCCURRENCE AGGREGATE $	$ 25,000,000 $ 25,000,000 $
B	WORKERS COMPENSATION AND EMPLOYERS' LIABILITY ANYPROPRIETOR/PARTNER/EXECUTIVE OFFICER/MEMBER EXCLUDED? Y/N: N (Mandatory in NH) If yes, describe under DESCRIPTION OF OPERATIONS below	N/A		WC561122507	1/1/2022	1/1/2023	X PER STATUTE / OTH-ER E.L. EACH ACCIDENT E.L. DISEASE - EA EMPLOYEE E.L. DISEASE - POLICY LIMIT	 $ 1,000,000 $ 1,000,000 $ 1,000,000
C D	Contractor's Equipment Pollution Liability			IH6962655912 CPYG27418685008	1/1/2022 1/1/2022	1/1/2023 1/1/2023	Leased/Rented Per Incident Aggregate	$150,000 $5,000,000 $5,000,000

DESCRIPTION OF OPERATIONS / LOCATIONS / VEHICLES (ACORD 101, Additional Remarks Schedule, may be attached if more space is required)

CERTIFICATE HOLDER

Village of Palm Springs
226 Cypress Lane
Atten Theresa L. Gonzalez
Palm Springs FL 33461-1699

CANCELLATION

SHOULD ANY OF THE ABOVE DESCRIBED POLICIES BE CANCELLED BEFORE THE EXPIRATION DATE THEREOF, NOTICE WILL BE DELIVERED IN ACCORDANCE WITH THE POLICY PROVISIONS.

AUTHORIZED REPRESENTATIVE

© 1988-2015 ACORD CORPORATION. All rights reserved.

The ACORD name and logo are registered marks of ACORD

Named Insured Schedule
for Tencarva Machinery Company LLC

- Tencarva Machinery Company, LLC
- Tencarva Holdings I, Inc.
- Tencarva Holdings II, Inc.
- Tencarva Intermediate, LLC
- Hudson Pump & Equipment Associates LLC
- Hudson Pump & Equipment, a Division of Tencarva Machinery
- Engineering Equipment, a Division of Tencarva Machinery
- Electric Service & Sales, a Division of Tencarva Machinery
- Southern Sales Co, a Division of Tencarva Machinery
- GPM Industries, a Division of Tencarva Machinery
- Uniguard Machine Guards, a Division of Tencarva Machinery
- Saladin Pump & Equipment Co

DRUG-FREE WORKPLACE

Hudson Pump & Equipment is a drug-free workplace and has
(Company Name)
a substance abuse policy in accordance with and pursuant to Section 440.102, *Florida Statutes*.

Acknowledged by: Larry Strickland Jr.

Firm Name: Hydson Pump & Equipment

Signature: Larry Strickland Jr.

Name and Title (Print or Type): Larry Strickland Jr. Sales Engineer

Date: 4/21/22

BID SUBMITTAL SIGNATURE PAGE – ITB # 2022B-010

ITEM	DESCRIPTION	UNIT PRICE
1.	Pumps (% Discount from Current MSRP)	% Ø
2.	Parts and Materials (% Discount from Current M	% Ø
3.	Hourly Rate for Repairs ($/HR)	$ 115.00

*** PLEASE AFFIX SIGNATURE WHERE INDICATED**

(FAILURE TO DO SO SHALL RESULT IN THE REJECTION OF YOUR ITB)

By signature on this document, Bidder acknowledges and agrees that its offer includes and accepts all terms, conditions, and specifications of the Village's ITB solicitation as originally published, without exception, change or alteration of any kind, except as may have been published by the Village in official amendments prior to the submission time.

FIRM NAME: **(Enter the entire legal name of the quoting entity)**
Hudson Pump & Equipment (A Division of Tencarva Machinery)

DATE: 4/21/22

* **SIGNATURE:** Larry Strickland Jr.

PRINT NAME: Larry Strickland Jr.

PRINT TITLE: Sales Engineer

ADDRESS: 3524 Craftsman Blvd.

CITY / STATE: Lakeland, FL ZIP CODE: 33803

TELEPHONE # (863) 665-7867

TOLL FREE # (800) 780-7867

E-MAIL: lstrickland@tencarva.com

FAX #: (863) 667-2951

APPLICABLE LICENSE(S) NUMBER # 17861 TYPE: Occupational Class A

FEDERAL ID # 56-1198229

BID SUBMITTAL SIGNATURE PAGE – ITB # 2022B-010

*** PLEASE AFFIX SIGNATURE WHERE INDICATED**
(FAILURE TO DO SO SHALL RESULT IN THE REJECTION OF YOUR ITB)

By signature on this document, Bidder acknowledges and agrees that its offer includes and accepts all terms, conditions, and specifications of the Village's ITB solicitation as originally published, without exception, change or alteration of any kind, except as may have been published by the Village in official amendments prior to the submission time.

FIRM NAME: (Enter the entire legal name of the quoting entity) Hudson Pump & Equipment (A Division of Tencarva Machinery)	DATE: 4/21/22
* SIGNATURE: Larry Strickland Jr.	PRINT NAME: Larry Strickland Jr. PRINT TITLE: Sales Engineer
ADDRESS: 3524 Craftsman Blvd. CITY / STATE: Lakeland, FL 33803	ZIP CODE: 33803
TELEPHONE # (863) 665-7867 TOLL FREE # (800) 780-7867	E-MAIL: lstrickland@tencarva.com FAX #: (863) 667-2951
APPLICABLE LICENSE(S) NUMBER # 17861	TYPE: Occupational Class A
FEDERAL ID # 56-1198229	

CONFLICT OF INTEREST DISCLOSURE FORM

The award of this contract is subject to the provisions of Chapter 112, *Florida Statutes*. All Bidders must disclose within their Bid: the name of any officer, director, or agent who is also an employee of the Village of Palm Springs.

Furthermore, all Bidder must disclose the name of any Village employee who owns, directly, or indirectly, an interest of more than five percent (5%) in the Bidder's firm or any of its branches.

The purpose of this disclosure form is to give the Village the information needed to identify potential conflicts of interest for evaluation team members and other key personnel involved in the award of this contract.

The term "conflict of interest" refers to situations in which financial or other personal considerations may adversely affect, or have the appearance of adversely affecting, an employee's professional judgment in exercising any Village duty or responsibility in administration, management, instruction, research, or other professional activities.

Please check one of the following statements and attach additional documentation if necessary:

✓ To the best of our knowledge, the undersigned firm has no potential conflict of interest due to any other Cities, Counties, contracts, or property interest for this Bid.

The undersigned firm, by attachment to this form, submits information which may be a potential conflict of interest due to other Cities, Counties, contracts, or property interest for this Bid.

Acknowledged by: Larry Strickland Jr.

Firm Name: Hudson Pump & Equipment

Signature: Larry Strickland Jr.

Name and Title (Print or Type): Larry Strickland Jr. Sales Engineer

Date: 4/21/22

CERTIFICATE OF LIABILITY INSURANCE

DATE (MM/DD/YYYY): 4/21/2022

THIS CERTIFICATE IS ISSUED AS A MATTER OF INFORMATION ONLY AND CONFERS NO RIGHTS UPON THE CERTIFICATE HOLDER. THIS CERTIFICATE DOES NOT AFFIRMATIVELY OR NEGATIVELY AMEND, EXTEND OR ALTER THE COVERAGE AFFORDED BY THE POLICIES BELOW. THIS CERTIFICATE OF INSURANCE DOES NOT CONSTITUTE A CONTRACT BETWEEN THE ISSUING INSURER(S), AUTHORIZED REPRESENTATIVE OR PRODUCER, AND THE CERTIFICATE HOLDER.

IMPORTANT: If the certificate holder is an ADDITIONAL INSURED, the policy(ies) must have ADDITIONAL INSURED provisions or be endorsed. If SUBROGATION IS WAIVED, subject to the terms and conditions of the policy, certain policies may require an endorsement. A statement on this certificate does not confer rights to the certificate holder in lieu of such endorsement(s).

PRODUCER
Marsh & McLennan Agency LLC
3625 N. Elm Street
Greensboro NC 27455

CONTACT NAME: Kelly S. Whitener, CIC, CISR
PHONE (A/C, No, Ext): 336 346-1329 **FAX (A/C, No):** 336 346-1397
E-MAIL ADDRESS: Kelly.Whitener@MarshMMA.com

INSURER(S) AFFORDING COVERAGE	NAIC #
INSURER A: Zurich American Insurance Company	16535
INSURER B: American Zurich Insurance Company	40142
INSURER C: Hanover Insurance Company	22292
INSURER D: Illinois Union Insurance Company	27960
INSURER E: Travelers Prop & Casualty Co of America	25674
INSURER F:	

INSURED TENCAMACHI
Tencarva Machinery Company
See Attachment for Extension of Named Insureds
1115 Pleasant Ridge Road
Greensboro NC 27409

COVERAGES **CERTIFICATE NUMBER:** 1750129243 **REVISION NUMBER:**

THIS IS TO CERTIFY THAT THE POLICIES OF INSURANCE LISTED BELOW HAVE BEEN ISSUED TO THE INSURED NAMED ABOVE FOR THE POLICY PERIOD INDICATED. NOTWITHSTANDING ANY REQUIREMENT, TERM OR CONDITION OF ANY CONTRACT OR OTHER DOCUMENT WITH RESPECT TO WHICH THIS CERTIFICATE MAY BE ISSUED OR MAY PERTAIN, THE INSURANCE AFFORDED BY THE POLICIES DESCRIBED HEREIN IS SUBJECT TO ALL THE TERMS, EXCLUSIONS AND CONDITIONS OF SUCH POLICIES. LIMITS SHOWN MAY HAVE BEEN REDUCED BY PAID CLAIMS.

INSR LTR	TYPE OF INSURANCE	ADDL INSD	SUBR WVD	POLICY NUMBER	POLICY EFF (MM/DD/YYYY)	POLICY EXP (MM/DD/YYYY)	LIMITS	
A	X COMMERCIAL GENERAL LIABILITY CLAIMS-MADE / X OCCUR GEN'L AGGREGATE LIMIT APPLIES PER: POLICY / X PRO-JECT / X LOC OTHER:			GLO561122607	1/1/2022	1/1/2023	EACH OCCURRENCE DAMAGE TO RENTED PREMISES (Ea occurrence) MED EXP (Any one person) PERSONAL & ADV INJURY GENERAL AGGREGATE PRODUCTS - COMP/OP AGG $	$ 2,000,000 $ 500,000 $ 10,000 $ 2,000,000 $ 4,000,000 $ 4,000,000 $
A	AUTOMOBILE LIABILITY X ANY AUTO OWNED AUTOS ONLY / SCHEDULED AUTOS X HIRED AUTOS ONLY / X NON-OWNED AUTOS ONLY			BAP561122707	1/1/2022	1/1/2023	COMBINED SINGLE LIMIT (Ea accident) BODILY INJURY (Per person) BODILY INJURY (Per accident) PROPERTY DAMAGE (Per accident) $	$ 2,000,000 $ $ $ $
E	X UMBRELLA LIAB / X OCCUR X EXCESS LIAB / CLAIMS-MADE DED / X RETENTION $ 10,000			CUP8S26447122NF	1/1/2022	1/1/2023	EACH OCCURRENCE AGGREGATE $	$ 25,000,000 $ 25,000,000 $
B	WORKERS COMPENSATION AND EMPLOYERS' LIABILITY ANYPROPRIETOR/PARTNER/EXECUTIVE OFFICER/MEMBER EXCLUDED? Y/N: N (Mandatory in NH) If yes, describe under DESCRIPTION OF OPERATIONS below	N/A		WC561122507	1/1/2022	1/1/2023	X PER STATUTE / OTH-ER E.L. EACH ACCIDENT E.L. DISEASE - EA EMPLOYEE E.L. DISEASE - POLICY LIMIT	 $ 1,000,000 $ 1,000,000 $ 1,000,000
C D	Contractor's Equipment Pollution Liability			IH6962655912 CPYG27418685008	1/1/2022 1/1/2022	1/1/2023 1/1/2023	Leased/Rented Per Incident Aggregate	$150,000 $5,000,000 $5,000,000

DESCRIPTION OF OPERATIONS / LOCATIONS / VEHICLES (ACORD 101, Additional Remarks Schedule, may be attached if more space is required)

CERTIFICATE HOLDER

Village of Palm Springs
226 Cypress Lane
Atten Theresa L. Gonzalez
Palm Springs FL 33461-1699

CANCELLATION

SHOULD ANY OF THE ABOVE DESCRIBED POLICIES BE CANCELLED BEFORE THE EXPIRATION DATE THEREOF, NOTICE WILL BE DELIVERED IN ACCORDANCE WITH THE POLICY PROVISIONS.

AUTHORIZED REPRESENTATIVE

© 1988-2015 ACORD CORPORATION. All rights reserved.

The ACORD name and logo are registered marks of ACORD

Named Insured Schedule
for Tencarva Machinery Company LLC

- Tencarva Machinery Company, LLC
- Tencarva Holdings I, Inc.
- Tencarva Holdings II, Inc.
- Tencarva Intermediate, LLC
- Hudson Pump & Equipment Associates LLC
- Hudson Pump & Equipment, a Division of Tencarva Machinery
- Engineering Equipment, a Division of Tencarva Machinery
- Electric Service & Sales, a Division of Tencarva Machinery
- Southern Sales Co, a Division of Tencarva Machinery
- GPM Industries, a Division of Tencarva Machinery
- Uniguard Machine Guards, a Division of Tencarva Machinery
- Saladin Pump & Equipment Co

DRUG-FREE WORKPLACE

Hudson Pump & Equipment is a drug-free workplace and has
(Company Name)
a substance abuse policy in accordance with and pursuant to Section 440.102, *Florida Statutes*.

Acknowledged by: Larry Strickland Jr.

Firm Name: Hydson Pump & Equipment

Signature: Larry Strickland Jr.

Name and Title (Print or Type): Larry Strickland Jr. Sales Engineer

Date: 4/21/22

NON-COLLUSION AFFIDAVIT

STATE OF Florida COUNTY OF Polk

Before me, the undersigned authority, personally appeared Larry Strickland Jr., who, after being by me first duly sworn, deposes and says of his/her personal knowledge that:

a. He / She is Larry Strickland Jr. of Hudson Pump & Equipment, the Bidder that has submitted a Bid to perform work for the following:

ITB No.: 2022B-010 Title: Submersible Wastewater Pumps, Accessories and Service

b. He / She is fully informed respecting the preparation and contents of the attached Request for Bids, and of all pertinent circumstances respecting such Solicitation. Such Bid is genuine and is not a collusive or sham Bid.

c. Neither the said Bidder nor any of its officers, partners, owners, agents, representatives, employees, or parties in interest, including this affiant, has in any way colluded, conspired, connived, or agreed, directly or indirectly, with any other Bidder, firm, or person to submit a collusive or sham Bid in connection with the Solicitation and contract for which the attached Bid has been submitted or to refrain from proposing in connection with such Solicitation and contract, or has in any manner, directly or indirectly, sought by agreement or collusion or communication or conference with any other Bidder, firm, or person to fix the price or prices in the attached Bid or any other Bidder, or to fix any overhead, profit, or cost element of the Bid price or the Bid price of any other Bidder, or to secure through any collusion, conspiracy, connivance, or unlawful agreement any advantage against the Village or any person interested in the proposed contract.

d. The price or prices quoted in the attached Bid are fair and proper and are not tainted by any collusion, conspiracy, connivance, or unlawful agreement on the part of the Bidder or any of its agents, representatives, owners, employees, or parties in interest, including this affiant.

Larry Strickland Jr.
Signature

Subscribed and sworn to (or affirmed) before me this 21st day of April 2022, by _____, who is personally known to me or who has produced _____ as identification.

DARLENE McMAHON
MY COMMISSION # GG323029
EXPIRES: May 05, 2023

Notary Signature: Darlene McMahon Notary Name: Darlene McMahon
Notary Public (State): FL
My Commission No: GG 323029 Expires on: May 5 2023

NOTIFICATION OF PUBLIC ENTITY CRIMES LAW

Pursuant to Section 287.133, *Florida Statutes*, you are hereby notified that a person or affiliate who has been placed on the convicted contractors list following a conviction for a public entity crime may not submit a Bid on a contract to provide any goods or services to a public entity, may not submit a Bid on a contract with a public entity for the construction or repair of a public building or public work, may not submit Bids on leases or real property to a public entity, may not be awarded or perform work as a contractor, supplier, sub-Bidder, or consultant under a contract with any public entity, and may not transact business with any public entity in excess of the threshold amount provided in Section 287.017 [F.S.] for Category Two [$35,000.00] for a period of thirty-six (36) months from the date of being placed on the convicted contractors list.

Acknowledged by: Larry Strickland Jr.

Firm Name: Hudson Pump & Equipment

Signature: Larry Strickland Jr.

Name and Title (Print or Type): Larry Strickland Jr. Sales Engineer

Date: 4/21/22

Notification of Public Records Law Pertaining to Public Contracts and Requests for Contractor Records Pursuant to Chapter 119, *Florida Statutes*

Pursuant to Chapter 119, Florida *Statutes*, Contractor shall comply with the public records law by keeping and maintaining public records required by the Village of Palm Springs in order to perform the service. Upon request from the Village of Palm Springs' custodian of public records, Contractor shall provide the Village of Palm Springs with a copy of the requested records or allow the records to be inspected or copied within a reasonable time at a cost that does not exceed the cost provided in Chapter 119, *Florida Statutes* or as otherwise provided by law. Contractor shall ensure that public records that are exempt or confidential and exempt from public records disclosure requirements are not disclosed except as authorized by law for the duration of the contract term and following completion of the contract If the Contractor does not transfer the records to the Village of Palm Springs. Contractor upon completion of the contract, shall transfer, at no cost, to the Village of Palm Springs all public records in possession of the Contractor or keep and maintain public records required by the Village of Palm Springs in order to perform the service. If the Contractor transfers all public records to the Village of Palm Springs upon completion of the contract, the Contractor shall destroy any duplicate public records that are exempt or confidential and exempt from public records disclosure requirements. If the Contractor keeps and maintains public records upon completion of the contract, the Contractor shall meet all applicable requirements for retaining public records. All records stored electronically must be provided to the Village of Palm Springs, upon request from the Village of Palm Springs' custodian of public records, in a format that is compatible with the information technology systems of the Village of Palm Springs.

IF THE CONTRACTOR HAS QUESTIONS REGARDING THE APPLICATION OF CHAPTER 119, FLORIDA STATUTES, TO THE CONTRACTOR'S DUTY TO PROVIDE PUBLIC RECORDS RELATING TO THIS CONTRACT, CONTACT THE CUSTODIAN OF PUBLIC RECORDS OR DESIGNEE AT 561-584-8200 Ext. 8431, kwynn@vpsfl.org, OR BY MAIL AT VILLAGE OF PALM SPRINGS, 226 CYPRESS LANE, PALM SPRINGS, FL 33461.

Acknowledged by:

Larry Strickland Jr.

Firm Name

Hudson Pump & Equipment

Signature

Larry Strickland Jr.

Name and Title (Print or Type)

Larry Strickland Jr. Sales Engineer

Date

4/21/22

ACKNOWLEDGEMENT OF ADDENDA
ITB # 2022B-010

SUBMERSIBLE WASTEWATER PUMPS, ACCESSORIES, AND SERVICE

INSTRUCTIONS: COMPLETE PART I OR PART II, WHICHEVER APPLIES

PART I:

List below the dates of issue for each addendum received in connection with this Solicitation:

Addendum #1, Dated 4-12-22

Addendum #2, Dated _____

Addendum #3, Dated _____

Addendum #4, Dated _____

Addendum #5, Dated _____

PART II:

NO ADDENDUM WAS RECEIVED IN CONNECTION WITH THIS SOLICITATION

_____
Firm Name

_____
Signature

_____
Name and Title (Print or Type)

_____
Date

Addendum No. 1

IN THE SPECIFICATIONS

1. A chart has been added to the Bid Submittal page to include line items.

Receipt acknowledged and conditions agreed to the 21 day of April, 2022.

Hudson Pump & Equipment
Bidder

Ray Stubblefield Jr.
By

END OF ADDENDUM

NON-COLLUSION AFFIDAVIT

STATE OF Florida COUNTY OF Polk

Before me, the undersigned authority, personally appeared Larry Strickland Jr., who, after being by me first duly sworn, deposes and says of his/her personal knowledge that:

a. He / She is Larry Strickland Jr. of Hudson Pump & Equipment, the Bidder that has submitted a Bid to perform work for the following:

ITB No.: 2022B-010 Title: Submersible Wastewater Pumps, Accessories and Service

b. He / She is fully informed respecting the preparation and contents of the attached Request for Bids, and of all pertinent circumstances respecting such Solicitation. Such Bid is genuine and is not a collusive or sham Bid.

c. Neither the said Bidder nor any of its officers, partners, owners, agents, representatives, employees, or parties in interest, including this affiant, has in any way colluded, conspired, connived, or agreed, directly or indirectly, with any other Bidder, firm, or person to submit a collusive or sham Bid in connection with the Solicitation and contract for which the attached Bid has been submitted or to refrain from proposing in connection with such Solicitation and contract, or has in any manner, directly or indirectly, sought by agreement or collusion or communication or conference with any other Bidder, firm, or person to fix the price or prices in the attached Bid or any other Bidder, or to fix any overhead, profit, or cost element of the Bid price or the Bid price of any other Bidder, or to secure through any collusion, conspiracy, connivance, or unlawful agreement any advantage against the Village or any person interested in the proposed contract.

d. The price or prices quoted in the attached Bid are fair and proper and are not tainted by any collusion, conspiracy, connivance, or unlawful agreement on the part of the Bidder or any of its agents, representatives, owners, employees, or parties in interest, including this affiant.

Larry Strickland Jr.
Signature

Subscribed and sworn to (or affirmed) before me this 21st day of April 2022, by _____, who is personally known to me or who has produced _____ as identification.

DARLENE McMAHON
MY COMMISSION # GG323029
EXPIRES: May 05, 2023

Notary Signature: Darlene McMahon Notary Name: Darlene McMahon
Notary Public (State): FL
My Commission No: GG 323029 Expires on: May 5 2023

NOTIFICATION OF PUBLIC ENTITY CRIMES LAW

Pursuant to Section 287.133, *Florida Statutes*, you are hereby notified that a person or affiliate who has been placed on the convicted contractors list following a conviction for a public entity crime may not submit a Bid on a contract to provide any goods or services to a public entity, may not submit a Bid on a contract with a public entity for the construction or repair of a public building or public work, may not submit Bids on leases or real property to a public entity, may not be awarded or perform work as a contractor, supplier, sub-Bidder, or consultant under a contract with any public entity, and may not transact business with any public entity in excess of the threshold amount provided in Section 287.017 [F.S.] for Category Two [$35,000.00] for a period of thirty-six (36) months from the date of being placed on the convicted contractors list.

Acknowledged by: Larry Strickland Jr.

Firm Name: Hudson Pump & Equipment

Signature: Larry Strickland Jr.

Name and Title (Print or Type): Larry Strickland Jr. Sales Engineer

Date: 4/21/22

Notification of Public Records Law Pertaining to Public Contracts and Requests for Contractor Records Pursuant to Chapter 119, *Florida Statutes*

Pursuant to Chapter 119, Florida *Statutes*, Contractor shall comply with the public records law by keeping and maintaining public records required by the Village of Palm Springs in order to perform the service. Upon request from the Village of Palm Springs' custodian of public records, Contractor shall provide the Village of Palm Springs with a copy of the requested records or allow the records to be inspected or copied within a reasonable time at a cost that does not exceed the cost provided in Chapter 119, *Florida Statutes* or as otherwise provided by law. Contractor shall ensure that public records that are exempt or confidential and exempt from public records disclosure requirements are not disclosed except as authorized by law for the duration of the contract term and following completion of the contract If the Contractor does not transfer the records to the Village of Palm Springs. Contractor upon completion of the contract, shall transfer, at no cost, to the Village of Palm Springs all public records in possession of the Contractor or keep and maintain public records required by the Village of Palm Springs in order to perform the service. If the Contractor transfers all public records to the Village of Palm Springs upon completion of the contract, the Contractor shall destroy any duplicate public records that are exempt or confidential and exempt from public records disclosure requirements. If the Contractor keeps and maintains public records upon completion of the contract, the Contractor shall meet all applicable requirements for retaining public records. All records stored electronically must be provided to the Village of Palm Springs, upon request from the Village of Palm Springs' custodian of public records, in a format that is compatible with the information technology systems of the Village of Palm Springs.

IF THE CONTRACTOR HAS QUESTIONS REGARDING THE APPLICATION OF CHAPTER 119, FLORIDA STATUTES, TO THE CONTRACTOR'S DUTY TO PROVIDE PUBLIC RECORDS RELATING TO THIS CONTRACT, CONTACT THE CUSTODIAN OF PUBLIC RECORDS OR DESIGNEE AT 561-584-8200 Ext. 8431, kwynn@vpsfl.org, OR BY MAIL AT VILLAGE OF PALM SPRINGS, 226 CYPRESS LANE, PALM SPRINGS, FL 33461.

Acknowledged by:

Larry Strickland Jr.

Firm Name

Hudson Pump & Equipment

Signature

Larry Strickland Jr.

Name and Title (Print or Type)

Larry Strickland Jr. Sales Engineer

Date

4/21/22

ACKNOWLEDGEMENT OF ADDENDA
ITB # 2022B-010

SUBMERSIBLE WASTEWATER PUMPS, ACCESSORIES, AND SERVICE

INSTRUCTIONS: COMPLETE PART I OR PART II, WHICHEVER APPLIES

PART I:

List below the dates of issue for each addendum received in connection with this Solicitation:

Addendum #1, Dated 4-12-22

Addendum #2, Dated _____

Addendum #3, Dated _____

Addendum #4, Dated _____

Addendum #5, Dated _____

PART II:

NO ADDENDUM WAS RECEIVED IN CONNECTION WITH THIS SOLICITATION

_____
Firm Name

_____
Signature

_____
Name and Title (Print or Type)

_____
Date

Addendum No. 1

IN THE SPECIFICATIONS

1. A chart has been added to the Bid Submittal page to include line items.

Receipt acknowledged and conditions agreed to the 21 day of April, 2022.

Hudson Pump & Equipment
Bidder

Ray Stubblefield Jr.
By

END OF ADDENDUM

Village of Palm Springs

Executive Brief

AGENDA DATE: June 9, 2022

DEPARTMENT: Public Service

ITEM #10: Amendment of Grant Agreement with the Department of Economic Opportunity of the State of Florida, for $47,500.00 as part of the Community Planning Technical Assistance Program for Septic to Sewer Projects.

SUMMARY: The Public Service Department was selected as a grant recipient for the Community Planning Technical Assistance Grant offered by the State of Florida's Department of Economic Opportunity.

The CPTA Grants provide counties, municipalities, and regional planning councils with the opportunity to create innovative plans and development strategies to promote a diverse economy, vibrant rural and suburban areas, and meet statutory requirements for planning while protecting environmentally sensitive areas. Understanding that many Florida communities have been impacted by hurricanes, CPTA grants may also be used for planning disaster recovery or resiliency planning, and economic development planning.

This is an amendment to the original agreement between the Department of Economic Opportunity (DEO) and the Village that was approved by the Council during the November 18, 2021 council meeting. The amended term of the agreement is in force until August 31, 2022.

The proposed agreement amendment was prepared by the Department of Economic Opportunity (DEO) and reviewed by the Interim Public Service Administrator, Assistant Village Manager, and the Village Attorney.

FISCAL IMPACT:

This grant will provide funds to conduct septic to sewer study, addressing areas within the Village of Palm Springs Utility Service Area that are on septic sewer systems. The Village will receive $47,500.00 split into three (3) separate deliverable reimbursements.

ATTACHMENTS:

1. Grant Agreement with DEO

DocuSign Envelope ID: 806B97CA-F3F0-477D-A895-3ADFB733F2AB

AMENDMENT ONE
TO COMMUNITY PLANNING TECHNICAL ASSISTANCE GRANT AGREEMENT
BETWEEN
THE FLORIDA DEPARTMENT OF ECONOMIC OPPORTUNITY
AND THE
VILLAGE OF PALM SPRINGS, FLORIDA

On November 22, 2021, the State of Florida, Department of Economic Opportunity ("DEO"), and the Village of Palm Springs, Florida ("Grantee") entered into Grant Agreement #P0430 ("Agreement") for the Grantee to undertake the project described in the Agreement.

WHEREAS, Section D of the Agreement provides that any amendment to the Agreement shall be in writing executed by the Parties thereto; and

WHEREAS, the Parties wish to amend the Agreement as set forth herein.

NOW, THEREFORE, in consideration of the mutual covenants and obligations set forth herein, the receipt and sufficiency of which are hereby acknowledged, the Parties agree to the following:

1. Section A, Agreement Period, is hereby deleted in its entirety and replaced with the following:

   A. AGREEMENT PERIOD
   This Agreement is effective as of July 1, 2021 (the "Effective Date") and shall continue until the earlier to occur of (a) June 30, 2022 (the "Expiration Date") or (b) the date on which either Party terminates this Agreement (the "Termination Date"). The period of time between the Effective Date and the Expiration Date or Termination Date is the "Agreement Period". Grantee shall not be reimbursed for any eligible costs (hereinafter referred to as "obligations") incurred outside of the Agreement Period, provided; however, that pursuant to Section 216.301, Florida Statutes (F.S.) any such obligations Grantee incurred during the Agreement Period for which services, tasks, or deliverable are expected to be completed after the Agreement Period may be eligible for reimbursement as long as these services, tasks, or deliverables are satisfactorily completed on or before August 31, 2022, as DEO shall determine in its sole and absolute discretion, and comply with Section 216.301, F.S., Section K, Invoices and Payments of this Agreement, and Section 10, Attachment 1 of this Agreement on or before August 31, 2022.

2. Section K, Invoices and Payments, is hereby deleted in its entirety and replaced with the following:

   K. INVOICES AND PAYMENTS

   1. Grantee will provide DEO's Agreement Manager invoices in accordance with the requirements of the State of Florida Reference Guide for State Expenditures (https://myfloridacfo.com/docs-sf/accounting-and-auditing-libraries/state-agencies/referenceguideforstateexpenditures4a8dd8e7f6fd4eaeb3eb12363d341f

DocuSign Envelope ID: 806B97CA-F3F0-477D-A895-3ADFB733F2AB

74.pdf?sfvrsn=ae70963d_2), with detail sufficient for a proper pre-audit and post-audit thereof. Grantee shall comply with the Invoice Submittal and Payment provisions of Section 10 of Attachment 1, Scope of Work, and with the following requirements:

a. Invoices must be legible and must clearly reflect the goods/services that were provided in accordance with the terms of the Agreement for the invoice period. Payment does not become due under the Agreement until the invoiced deliverable(s) and any required report(s) are approved and accepted by DEO.

b. Invoices must contain the Grantee's name, address, federal employer identification number or other applicable Grantee identification number, the Agreement number, the Grantee's invoice number, an invoice date, the dates of service, the deliverable number, a description of the deliverable, a statement that the deliverable has been completed, and the amount being requested. DEO or the State may require any additional information from Grantee that DEO or the State deems necessary to process an invoice.

c. Invoices must be submitted in accordance with the time requirements specified in the Scope of Work.

2. In accordance with Section 216.301, F.S., DEO may extend the invoice period for eligible obligations Grantee incurred during the Agreement Period when the services related to the invoice are expected to be completed outside of the Agreement Period (hereinafter referred to as the "Extended Period"). In order for Grantee to receive payment for an Extended Period invoice, all of the following terms and conditions must be complied with:

a. Grantee must have incurred the obligation related to such invoice, through an agreement with DEO executed prior to June 30, 2022.

b. All work included in each such invoice must have started before June 30, 2022, be ongoing, and must be satisfactorily completed, as DEO shall determine in its sole and absolute discretion, on or before August 31, 2022.

c. DEO must have received and approved each such invoice for payment no later than September 15, 2022.

3. At DEO's or the State's option, Grantee may be required to invoice electronically pursuant to guidelines of the Department of Management Services.

4. Payment shall be made in accordance with Section 215.422, F.S., Rule 69I-24, F.A.C., and Section 287.0585, F.S., which govern time limits for payment of invoices. Section 215.422, F.S., provides that agencies have five (5) working days to inspect and approve goods and services unless the Scope of Work specifies otherwise. DEO has twenty (20) days to deliver a request for payment (voucher) to the Department of Financial Services. The twenty (20) days are measured from the latter of the date the invoice is received or the goods or services are received, inspected and approved. The Scope of Work may specify conditions for retainage. Invoices returned to a Grantee due to

DocuSign Envelope ID: 806B97CA-F3F0-477D-A895-3ADFB733F2AB

preparation errors will result in a delay of payment. Invoice payment requirements do not start until a properly completed invoice is provided to DEO. DEO is responsible for all payments under the Agreement.

5. Section 55.03(1), F.S., identifies the process applicable to the determination of the rate of interest payable on judgments and decrees, and pursuant to Section 215.422(3)(b), F.S., this same process applies to the determination of the rate of interest applicable to late payments to vendors for goods and services purchased by the State and for contracts which do not specify a rate of interest. The applicable rate of interest is published at:

   https://www.myfloridacfo.com/Division/AA/LocalGovernments/Current.htm

6. Grantee shall submit any outstanding Extended Period invoice and the final invoice for payment to DEO no later than August 31, 2022. If Grantee fails to do so, DEO, in its sole discretion, may refuse to honor any requests submitted after this time period and may consider Grantee to have forfeited any and all rights to payment under this Agreement.

3. Attachment 1, Scope of Work, Section 5, Deliverables, is hereby deleted in its entirety and replaced with the following:

5. DELIVERABLES: The specific deliverables, tasks, minimum levels of service, due dates, and payment amounts are set forth in the following table:

Deliverables and Tasks	**Minimum Level of Service**	**Payment Amount Not to Exceed**	**Financial Consequences**
Deliverable 1. Project Kick Off Meeting and Data Collection and Analysis Grantee shall conduct a Project Kick Off meeting and collect and analyze data in accordance with Section 3.A. of this Scope of Work. Deliverable due date: July 31, 2022	Completion of Deliverable 1 as evidenced by submission of all of the following: 1. Agenda, list of attendance, meeting materials, if any, and minutes or a written summary of discussion from the Project Kick Off meeting. 2. Written summary of the data analyzed and the preliminary findings including an identification	$5,000	As provided in Section 12 of this Scope of Work, below.

DocuSign Envelope ID: 806B97CA-F3F0-477D-A895-3ADFB733F2AB

	of the Village's priority areas. Grantee shall submit copies of all required documentation identified above on paper or electronically in MS Word or PDF format. If maps are required, they shall be uploaded to SERA system or provided on a compact disc in PDF format with ArcGIS 10.3.1 compatible shapefiles if they are available.		
Deliverable 2. Septic to Sewer Study and Village Council Hearing Grantee shall prepare a Septic to Sewer Study and conduct a Village Council hearing in accordance with Section 3.B. of this Scope of Work. Deliverable due date: July 31, 2022	Completion of Deliverable 2 as evidenced by submission of all of the following: 1. Final Septic to Sewer Study. 2. Copies of public hearing notice(s), meeting agenda(s), and either minutes or a written summary of the Village Council public hearing in which the Septic to Sewer Study was considered. Grantee shall submit copies of all required documentation identified above on paper or electronically in MS Word or PDF format. If maps are required, they shall be uploaded to SERA system or provided on a compact disc in PDF format with ArcGIS compatible shapefiles if they are available.	$36,500	As provided in Section 12 of this Scope of Work, below.
Deliverable 3. Public Education Workshop and Outreach Grantee shall conduct a Public Education Workshop and	Completion of Deliverable 3 as evidenced by submission of all of the following: 1. Copy of workshop notice, informational mailer, list of attendance,	$6,000	As provided in Section 12 of this Scope of Work, below.

DocuSign Envelope ID: 806B97CA-F3F0-477D-A895-3ADFB733F2AB

Outreach in accordance with Section 3.C. of this Scope of Work. Deliverable due date: August 31, 2022	presentation, and workshop summary from the Public Education Workshop. 2. Screenshot illustrating presentation materials posted on the Village's website. 3. Copy of the edition of the Village's monthly newsletter that contains a summary of the Septic to Sewer Study. Grantee shall submit copies of all required documentation identified above on paper or electronically in MS Word or PDF format. If maps are required, they shall be uploaded to SERA system or provided on a compact disc in PDF format with ArcGIS compatible shapefiles if they are available.		
			Total Amount Not to Exceed: $47,500

4. All other terms and conditions of the Agreement remain in effect.

Remainder of page intentionally left blank

DocuSign Envelope ID: 806B97CA-F3F0-477D-A895-3ADFB733F2AB

IN WITNESS WHEREOF, and in consideration of the mutual covenants set forth above, the Parties, through their duly authorized representatives, sign this amendment and represent and warrant that they understand the terms and conditions of this amendment. This amendment is effective upon final execution by both Parties.

DEPARTMENT OF ECONOMIC OPPORTUNITY		**VILLAGE OF PALM SPRINGS, FLORIDA**	
By	_____	**By**	_____
	Signature		Signature
	Benjamin M. Melnick		**Beverly Smith**
Title	**Deputy Secretary** **Division of Community Planning**	**Title**	**Mayor**
Date	_____	**Date**	_____

Approved as to form and legal sufficiency, subject to full and proper execution by the Parties.

OFFICE OF THE GENERAL COUNSEL
DEPARTMENT OF ECONOMIC OPPORTUNITY

By_____

Date_____

Village of Palm Springs

Executive Brief

AGENDA DATE: June 9, 2022

DEPARTMENT: Planning, Zoning & Building

ITEM #11: Temporary Use Permit - Sales Center - Fontana Townhomes - 3674 San Bernardino Way (formerly 4090 Coconut Road & 4063 Davis Road)

SUMMARY: Meritage Homes of Florida, Inc. is requesting a Temporary Use Permit to allow a temporary model/sales center located on the 4.73-acre parcel currently being developed as the Fontana Townhomes residential project at 3674 San Bernardino Way. In an effort to begin the sales process, the applicant is requesting that a 1,915 square foot townhome be used as a model/sales center for the 59 fee-simple townhome community that is currently under construction. The proposed location for the sales center is Lot 1 (Building 1), with the temporary parking located in front of Units 1 and 2 (Building 1) on the previously approved site plan (Resolution No. 2021-03 - May 13, 2021) and final plat (Resolution No. 2022-04 - January 13, 2022).

If approved, the unit will be a "dry model", providing temporary parking and landscaping according to the approved landscape plans.

Section 34-895 - Village Code - Temporary land uses in zoning districts - provides that the Village Council may grant approval for temporary, principal uses of land that are not specifically allowed by the zoning district. A Temporary Use permit may not exceed two (2) years and is not renewable.

The new Fontana Townhomes development is currently being constructed. Staff recommends approval of the proposed one (1) year Temporary Use permit to support a temporary sales office until a model unit is built to serve as Fontana's sales office.

FISCAL IMPACT:
The proposed request does not have a fiscal impact on the Village.

ATTACHMENTS:
1. Proposed Temporary Use Agreement - Fontana Townhomes
2. Site Plan, Floor Plan and Parking Plan (Exhibit "B" to Agreement)
3. Applicant Temporary Use Application
4. Aerial and Location Maps

Temporary Use Permit Agreement

THIS TEMPORARY USE PERMIT AGREEMENT ("License") is made this _____ day of _____, 2022, by and between the VILLAGE OF PALM SPRINGS, FLORIDA, a municipal corporation, ("Village") by and through the authority of its Land Development Director, with its principal address at 226 Cypress Lane, Palm Springs, FL 33461; and MERITAGE HOMES OF FLORIDA, INC., a Florida Corporation with its principal address at 1400 Centrepark Boulevard, Suite 1000, West Palm Beach, Florida 33401 ("Licensee").

RECITALS

WHEREAS, Licensee owns property located at 3674 San Bernardino Way, Palm Springs, Florida ("Property") described in Exhibit "A" attached hereto and incorporated herein; and

WHEREAS, currently the Property is being improved as a residential planned development with 59 fee-simple townhomes and amenities; and

WHEREAS, Licensee desires to utilize a townhouse as a model/sales center for the townhomes;

and

WHEREAS, the Property is located within the incorporated limits of the Village of Palm Springs, Florida; and

WHEREAS, the Licensee has requested that the Village license the use of the Property for a temporary model/sales center on a portion of the Property; and

WHEREAS, the use of the Property for model/real estate sales office is not a permitted or special exception use in the RM district in which the Property is located; and

WHEREAS, Village Code Section 34-895 authorizes the Village Council, for good cause shown, to grant a temporary use permit for certain principal uses, not to exceed two (2) year from the approval date; and

WHEREAS, Village Code Section 34-895(e)(3) requires the Village Council be the approval authority after due public notice for any proposed temporary use that exceeds sixty (60) days; and

WHEREAS, the Village Council has determined that granting a temporary use permit to the Licensee under the terms and conditions of Village Code Section 34-895 and this Agreement serve a valid public purpose and is in the best interest of the Village.

NOW, THEREFORE, in consideration of the mutual covenants contained herein, the sufficiency of which is hereby acknowledged, and intending to be legally bound hereby, the Parties agree as follows:

1. FINDINGS

1.1 The foregoing recitals are incorporated herein as true and correct findings of fact.

2. TEMPORARY PERMITTED PREMISES AND LAND USE

2.1 In accordance with the provisions of Village Code Section 34-895, the Village by and through the authority of its Village Council hereby grants Licensee a temporary, revocable permit which authorizes Licensee to utilize the Property for the sole use as described herein. No other interest or right to use the Property is granted to Licensee under this License. The temporary use permit is revocable as provided in Village Code Section 34-895.

3. TERM AND EFFECTIVE DATE

3.1 The term of this Temporary Use Permit under this Agreement is limited to one (1) year. The term shall commence on _____, 2022 ("Commencement Date") and shall terminate on _____, 2023. This Agreement and the permit shall become effective upon approval by the Village Council. At the conclusion of the one-year term, the temporary permitted use of the Property shall expire, and the Licensee shall terminate such use. Termination of such use shall not be deemed complete until model/sales center, along with all appurtenances and the parking area, has been completely removed from the property. Failure to terminate the temporary use shall be grounds for default and subject the Licensee to appropriate legal action including mandatory injunctive relief and the reasonable costs incurred by the Village in enforcing this Agreement including attorney's fees at all administrative, trial and appellate levels. Pursuant to Village Code Section 34-895, upon issuance of a court order from a court of competent jurisdiction awarding attorney's fees and/or costs, such costs shall become a lien on the property, if unpaid after thirty (30) days following the entry of the order.

4. LICENSE CONDITIONS

4.1 Licensee shall adhere to the following conditions as a part of this License Agreement.

1. A 1,915 square foot townhouse and temporary parking area may be installed on the Property, within the area proposed for Building 1 (Lots 1 - 7), to serve as a model/sales center. The temporary model/center and parking shall be complimented with landscaping and be served by permanent utility connections. Proposed improvements are depicted on plans in Exhibit "B", attached hereto and incorporated herein.
2. Temporary landscaping shall be installed around the building and perimeter of the parking area. All mechanical equipment shall be screened from view with landscaping.
3. Permanent utility connections shall be completed prior to occupancy/use and require Village permits:

a. Permanent potable water connection will be made via the potable water main.
b. Permanent sanitary sewer connection will be made via the sanitary sewer main.
c. Permanent electric service shall be provided via an underground line. A temporary generator is not allowed as the electric source.
d. Permanent irrigation shall be provided for the permanent landscaping.
e. Permanent light poles shall be installed to ensure adequate lighting of parking area.

4. The Applicant may be required to undertake additional security measures, based on the number of complaints or calls for service for incidents at the premises, as determined by the Police Chief. Such additional security measures, as approved by the Police Chief, may include provisions of on-site security at the operator's sole expense.
5. The model/sales center shall only be utilized during normal business hours. Licensee is responsible for securing the premises.
6. The model/sales center shall be accommodated with ADA-compliant ramps.
7. Safe vehicular access from San Bernardino Way shall be provided in the form of a paved road and paver driveway to the model/sales center, constructed per Village approved Utility/Civil Plans with a minimum of first lift of asphalt.
8. The temporary sales office shall be served with a permanent/temporary paver driveway ADA parking space and two regular parking stalls located on the adjacent permanent/temporary paver driveways.

5. INDEMNIFICATION

5.1 To the fullest extent permitted by laws and regulations, Licensee shall indemnify, defend, save and hold harmless, Village, its officers, agents and employees from any and all claims, damages, losses, liabilities and expenses, pertaining to or arising out of the temporary use permitted under this Agreement and pertaining to or arising out of the use and/or occupancy of the Property by Licensee or any of its subcontractors, agents, officers, employees, independent contractors, invitees or guests. Licensee shall pay all losses, claims, liens, settlements, or judgments of any nature whatsoever in connection with the foregoing indemnification, including but not limited to, reasonable attorney's fees (including appellate attorneys' fees and costs). All costs and fees associated with any such defense shall be the responsibility of Licensee. Nothing contained herein is intended nor shall it be construed to waive the Village's rights and immunities under the common law or Florida Statute 768.28, as amended from time to time.

5.2 The Licensee's obligation to indemnify, defend, and pay for the defense, or at the Village's option, to participate and associate with the Village in the defense and trial of any claim and related settlement negotiations, shall be triggered by the Village's notice of claim for indemnification to Licensee. Licensee's inability to evaluate liability or its evaluation of liability, shall not excuse the Licensee's duty to defend and indemnify within 7 days after such notice is given by the Village. Only an adjudication or judgment after the highest appeal is exhausted, specifically finding the Village solely negligent, shall excuse performance of this provision by Licensee. Licensee shall pay all costs and fees related to this obligation and its enforcement by the Village. The Village's failure to notify the Licensee of a claim shall not release the Licensee of the above duty to defend and indemnify.

6. INTEGRATION

6.1 It is agreed and understood that this License contains all agreements, promises and understandings between the Village and Licensee and as to the temporary use of the Property (as described herein) and that no verbal or oral agreements, promises or understandings shall be binding upon either Village or Licensee in any dispute, controversy or proceeding at law, and any addition, variation or modification to this License shall be void and ineffective unless made in writing signed by the Parties. In the event any provision of this License is found to be invalid or unenforceable, such finding shall not affect the validity and enforceability of the remaining provisions of this License. The failure of a Party to insist upon strict performance of any of the terms or conditions of this License or to exercise any of its rights under this License shall not waive such rights and such Party shall have the right to enforce such rights at any time and take such action as may be lawful and authorized under this License, in law or in equity.

7. GOVERNING LAW

7.1 This License and the performance thereof shall be governed, interpreted, construed and regulated by the laws of the State of Florida and venue for any action arising out of this License shall be in Palm Beach County, Florida. **Further, if for any reason a claim, dispute or controversy is not resolved by the parties, the parties irrevocably and voluntarily agree to waive any right to a trial by jury in respect to any such claim, dispute or controversy.**

8. ASSIGNMENT

8.1 This License is personal to Licensee and may not be sold, assigned or transferred by Licensee or any other person or entity.

9. NOTICES

9.1 All notices hereunder must be in writing and shall be deemed validly given if sent by certified mail, return receipt requested or by nationally recognized overnight mail courier, addressed as follows (or any other address that the party to be notified may have designated to the sender by like notice):

Village:
The Village of Palm Springs, Florida
Attention: Village Manager
226 Cypress Lane
Palm Springs, Florida 33461

With mandatory copy to:
The Village of Palm Springs, Florida
Attention: Glen Torcivia, Village Attorney
701 Northpoint Parkway, Suite 209
West Palm Beach, Florida 33407

Licensee:	Meritage Homes of Florida, Inc. Attention: Justin Cook 1400 Centerpark Blvd., Suite 1000 West Palm Beach, FL 33401
With a required copy to:	Meritage Homes Corporation Attention: Curtis Keller 8800 E. Raintree Drive, Suite 300 Scottsdale, AZ 85260

10. APPLICABLE LAWS

10.1 During the term of this License, the Licensee shall maintain the Property in compliance with this License, the Village Code, and all applicable governmental laws, rules, regulations, statutes, ordinances, resolutions, directives, covenants, easements, zoning and land use regulations, and restrictions of record, permits, building codes, and the requirements of any applicable fire insurance underwriter or rating bureau, now in effect or which may hereafter come into effect (including, without limitation, the Americans with Disabilities Act and laws regulating hazardous substances) (collectively "Laws"). Licensee shall, with respect to the condition of the Property and at the Licensee's sole cost and expense, comply with (a) all laws relating solely to Licensee's specific and unique nature of use of the Property; and (b) all building codes requiring modifications to the Property due to the use of the Property and any improvements to be made by the Licensee in and upon the Property.

11. SURVIVAL

11.1 The provisions of this Agreement relating to indemnification shall survive and termination or expiration of this Agreement. Additionally, any provisions of this Agreement which require performance subsequent to the termination or expiration of this Agreement shall also survive such termination or expiration.

12. CAPTIONS

12.1 The captions contained in this Agreement are inserted for convenience only and are not intended to be part of this Agreement.

13. ATTORNEY'S FEES

13.1 It is the understanding of the parties that if legal action is required to enforce this Agreement, the prevailing party will be entitled to reasonable attorney's fees and costs in addition to any other relief to which the prevailing party is awarded.

14. TERMINATION FOR DEFAULT

14.1 In the event that the Licensee is found to be in violation of any part of the Village Code or any other applicable Laws for the Property or any other property owned by the Licensee in the Village, in a code enforcement proceeding of a Special Magistrate for the Village, or in a stipulated agreement, or in a court of competent jurisdiction, the Village shall give thirty (30) calendar days notice to the Licensee that the Licensee is in default. In the event the Licensee fails to correct the conditions of default, or the default is not remedied to the satisfaction of the Village within said thirty (30) calendar days, the Village shall have all legal remedies available to it, including, but not limited to, the termination of this Agreement, in which case, the Village shall be entitled to recover its attorney's fees and costs, and any and all damages permitted by law arising from the default. A breach of this Agreement by Licensee may be enforced in code enforcement proceedings brought by the Village and the Special Magistrate is hereby authorized to order the immediate cessation of the temporary permitted use, and other code violations and to award the Village all legal and equitable relief to which the Magistrate shall determine is just and appropriate. Notwithstanding the foregoing, this Agreement is a contract, which may also be enforced in a court of law. The Village has no liability for damages or anticipated profits for business losses or other damages caused by the termination of this Temporary Use Permit Agreement in the event of a default.

14.2 The parties hereto agree that the Village's right to terminate this Agreement as stated herein is absolute and shall not result in any inequity to Licensee because of any authorized improvements by Licensee to the Facilities for the use licensed herein. Accordingly, this Agreement shall not be construed as an irrevocable license or a license coupled with an interest because of said improvements. Termination shall also be subject to Section 34-895(g) of the Village Code.

14.3 The parties hereto agree that the Village and the public will be irreparably damaged if the terms and conditions of this Agreement are not adhered to and specifically enforced. Therefore, in the event of a violation or threatened violation by the Agreement, then the Village shall be entitled to all the rights and remedies, including but not limited to injunctive relief, restraining such violation without being required to show any actual damage, irreparable harm, or to post any bond or other security.

15. TIME

15.1 Time is expressly declared to be of the essence of this Temporary Use Permit Agreement.

16. RIGHTS OF OTHERS

16.1 Nothing contained herein, whether express or implied, is intended to confer any rights or remedies under or by reason of this Agreement on any persons other than the parties hereto and their respective administrators and legal representatives, nor is anything in this Agreement intended to relieve or discharge the obligation or liability of any third person to any party to this Agreement nor shall any provision give any third persons any right of subrogation or action over or against any party to this Agreement.

17. PREPARATION

17.1 This Agreement shall not be construed more strongly against either party regardless of who was more responsible for its preparation.

18. COUNTERPARTS

18.1 This Agreement may be executed in one or more counterparts, each of which shall be deemed an original, but all of which together shall constitute one and the same instrument.

IN WITNESS WHEREOF, the parties have caused this Temporary Use Permit Agreement to be executed on the day and year first above written.

THE VILLAGE OF PALM SPRINGS

BY: _____
Bev Smith, Mayor

ATTEST:

BY: _____
Kimberly M. Wynn, Village Clerk

APPROVED AS TO FORM AND
LEGAL SUFFICIENCY:

_____
Glen Torcivia, Village Attorney

MERITAGE HOMES OF FLORIDA, INC.

BY: _____
Justin Cook, Division President

WITNESSES:

_____

PRINT: _____

_____

PRINT: _____

EXHIBIT "A"

Property Description

PCNs: 70-43-44-30-30-012-0020; 70-43-44-30-30-018-0010; 70-43-44-30-30-000-0010; 70-43-44-30-30-000-0020; 70-43-44-30-30-000-0030; 70-43-44-30-30-000-0040; 70-43-44-30-30-000-0050; 70-43-44-30-30-000-0060 AND 70-43-44-30-30-000-0070

LEGAL DESCRIPTION

TRACTS L5 AND R, LOTS 1, 2, 3, 4, 5, 6 AND 7, FONTANA TOWNHOMES, ACCORDING TO THE PLAT THEREOF, AS RECORDED IN PLAT BOOK 5, PAGE 72, PUBLIC RECORDS OF PALM BEACH COUNTY, FLORIDA.

SAID LANDS SITUATE IN THE CITY OF PALM SPRINGS, PALM BEACH COUNTY, FLORIDA

EXHIBIT "A"

Property Description

PCNs: 70-43-44-30-30-012-0020; 70-43-44-30-30-018-0010; 70-43-44-30-30-000-0010; 70-43-44-30-30-000-0020; 70-43-44-30-30-000-0030; 70-43-44-30-30-000-0040; 70-43-44-30-30-000-0050; 70-43-44-30-30-000-0060 AND 70-43-44-30-30-000-0070

LEGAL DESCRIPTION

TRACTS L5 AND R, LOTS 1, 2, 3, 4, 5, 6 AND 7, FONTANA TOWNHOMES, ACCORDING TO THE PLAT THEREOF, AS RECORDED IN PLAT BOOK 5, PAGE 72, PUBLIC RECORDS OF PALM BEACH COUNTY, FLORIDA.

SAID LANDS SITUATE IN THE CITY OF PALM SPRINGS, PALM BEACH COUNTY, FLORIDA

EXHIBIT “B”

±ME
4.91 ±ME
OHE
HIGH POINT
15.72
15.61
15.50
15.29
15.54
15.10
ADA Accessible Sidewalk Path
15.06
14.72
14.91
ADA Accessible Portlet
7.5'
15.54
15.67
15.18
15.07
ADA Parking St
16.00
16.00
Standard Parking S
16.00
63 ±ME
4.39 ±ME
4.34 ±ME
1
2
3
4
5
5' CONCRETE
BUILDING 1
(7 UNITS)

SALES OFFICE SPACE PLAN

SCALE: 1/4"=1'

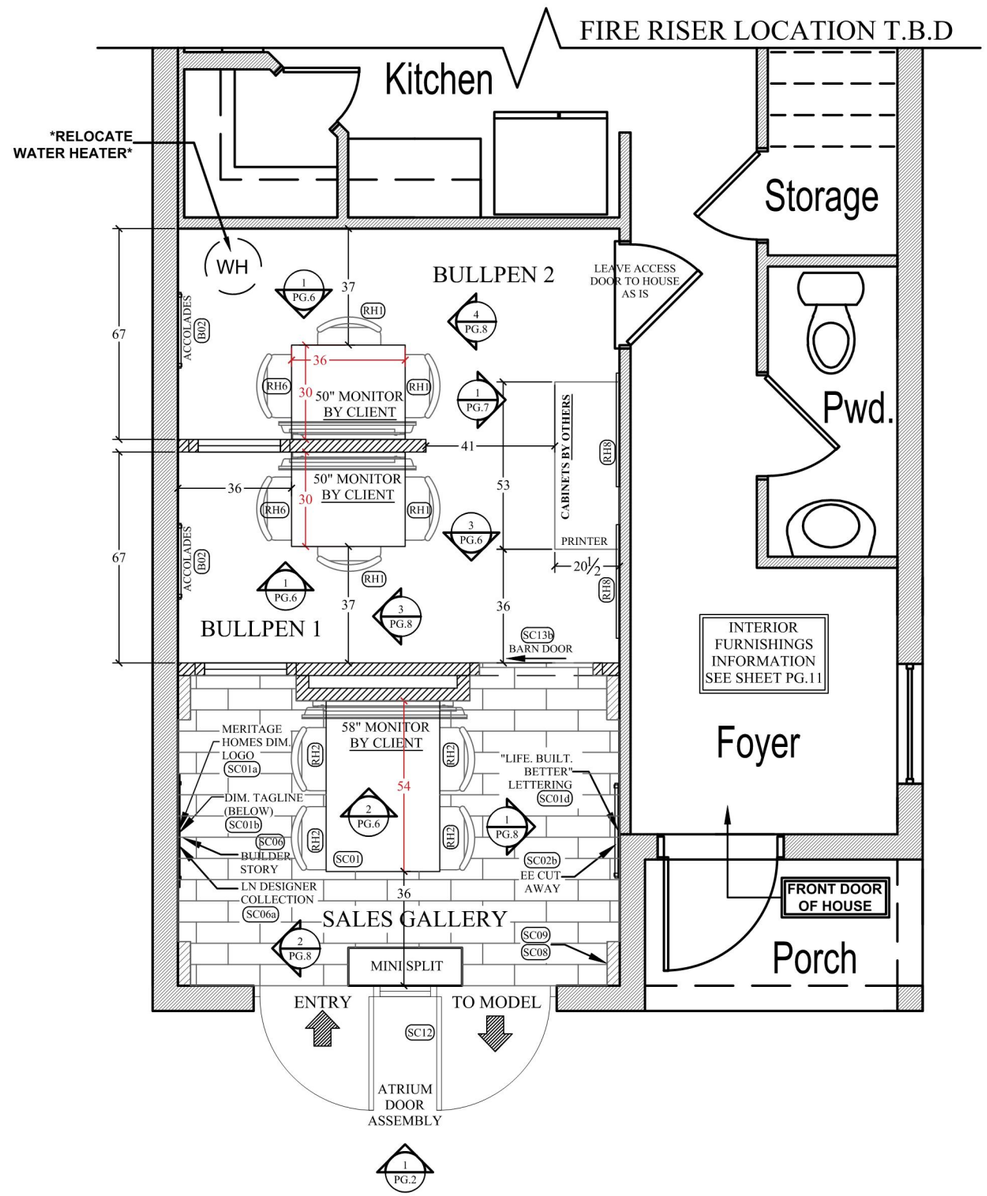

NOTES

1. DRAWINGS AND SPECIFICATIONS ARE FOR PURPOSES OF COMMUNICATING DESIGN INTENT. SOME ITEMS NOTED ARE NOT INDICATED ON THE FLOOR PLAN. REFER TO THE FABRICATION AGREEMENT FOR ADDITIONAL INFORMATION.
2. ALL PERMITS REQUIRED FOR CONSTRUCTION SHALL BE SECURED BY THE CLIENT'S GENERAL CONTRACTOR OR THEIR AGENT(S).
3. ALL PORTIONS OF THIS SALES OFFICE SHALL COMPLY WITH LOCAL AND FEDERAL ACCESSIBILITY REQUIREMENTS.

SALES CENTER ITEMS BY QUEST

-SC01 Sales Gallery Table (x1) SIZE CHANGE: 54"
-SC01a Meritage Homes Dimensional Logo (x1)
-SC01b Dimensional Tagline "Setting The Standard..." (x1)
-SC01d "LIFE. BUILT. BETTER" Lettering (x1)
-SC02b Cut Away Wall Graphic Panel (x1)
-SC06 Builder Story Display (36"x18") (x1)
-SC06a LN Designer Collection Story (36"x13") (x1)
-SC08 Equal Housing Wall Graphic Panel (x1)
-SC09 Model Home Options Wall Graphic Panel (x1)
-SC12 Storefront Vinyl (x1)
-SC13b Barn Door Pull Hardware ONLY (x2)

BULLPEN ITEMS BY QUEST

-B01 Bullpen Desk (x2) SIZE CHANGE: 30"x36"
-B02 Accolades Wall Graphic Panel (x2)

FURNITURE BY RESTORATION HARDWARE

-RH1 Sales Bullpen Chair (x4)
-RH2 Sales Gallery Stool (x4)
-RH6 Bullpen Task Chair (x2)
-RH8 Wall Art 30x36 (x2)

IN-HOME EE DISPLAYS BY QUEST

-IH-A High Level Info @ Front Door
-IH-B Design Collections/LiVENOW
-IH-C Noise Reduction
-IH-D Cutaway/Temperature Regulation
-IH-E Fresh Air Management
-IH-F Pests
-IH-G MConnect
-IH-H Multispeed HVAC

QUEST DESIGN
& FABRICATION, LLC.
13720 Stafford Rd.,Ste 100
Stafford, Texas 77477
281-240-9416 (p)
281-240-9385 (f)

PROJECT NO.: 25406

DRAWN BY: AR/KG

CHECKED BY:AR

DATE: 06.17.2021

DATE REVISED:
1 07.22.2021 - DP completed
2 01.06.2022 - Updated Drawing Set
3 01.10.2022 - Updated DP

MERITAGE HOMES - UNIVERSAL LiVE.NOW. - SFL
FONTANA - LOT#1 - T163 - RIGHT
DISPLAY POSITION LAYOUT

SHEET 1

FOR QUESTIONS CONTACT ASHMITA ROY
AROY@QUESTDISPLAYS.COM 832-947.2106

© 2021. Quest Design & Millwork. All rights reserved.
Quest Design & Millwork is the sole owner of this design. The reproduction or use (including any fabrication of the items in this design), in part or in whole, without the written permission of Quest Design & Millwork is prohibited.

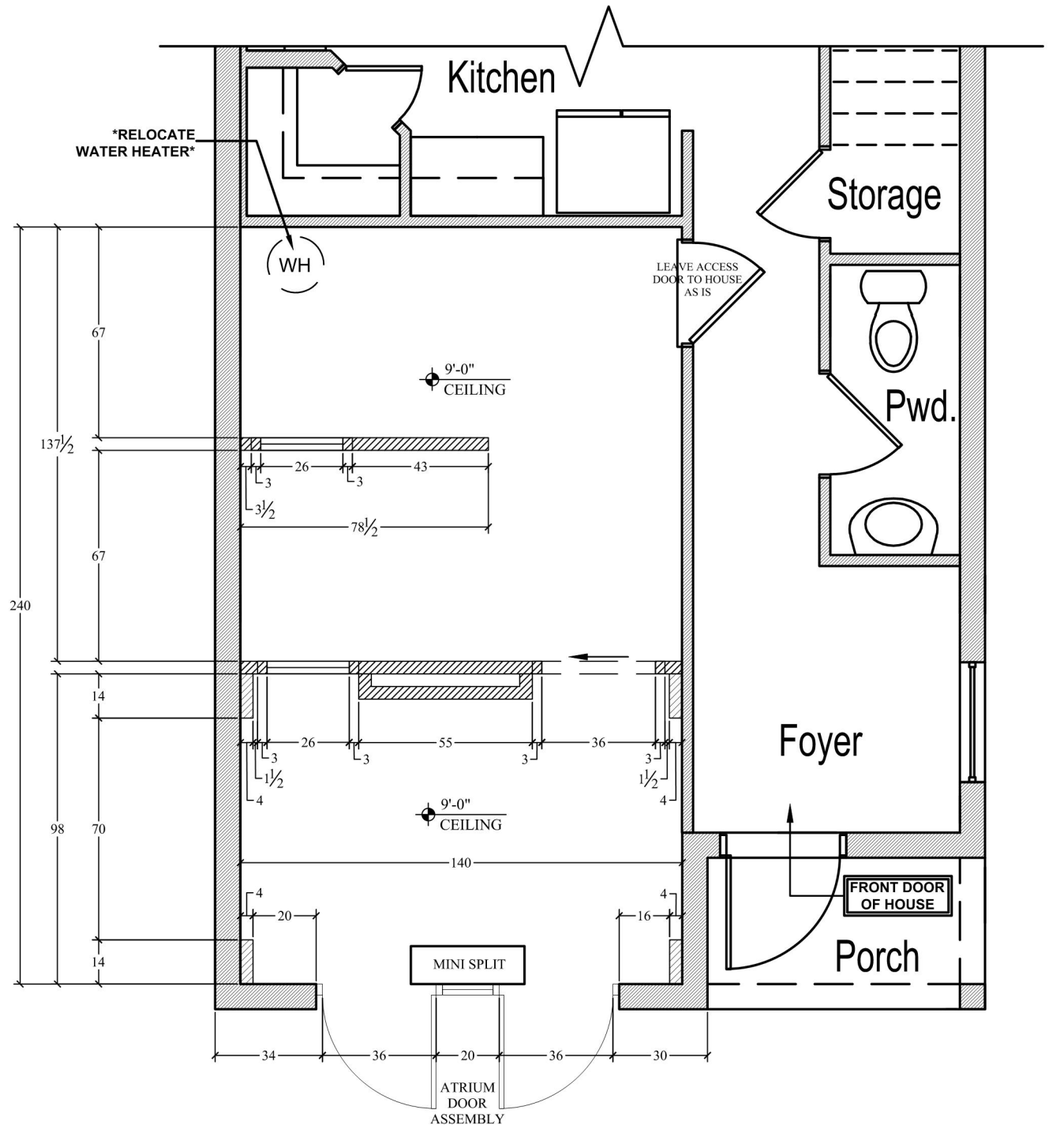

SALES OFFICE FRAMING PLAN & STOREFRONT DETAILS

SCALE: 1/4"=1'

STOREFRONT FRENCH DOOR HARDWARE

MAIN ENTRY TO SALES CENTER
PRODUCT: HALIFAX DOOR LEVER, KEYED ENTRY
ITEM#: 156HFLSQTSMT15
SIGNATURE SERIES
FINISH: SATIN NICKEL

PRODUCT: HALIFAX SINGLE CYLINDER DEADBOLT
ITEM: #158 SQT 155MT
SIGNATURE SERIES
FINISH: SATIN NICKEL

DOOR TO/ FROM MODEL COMPLEX
PRODUCT: HALIFAX DOOR LEVER, PRIVACY BED/BATH LEVER
ITEM#: 155HFLSQT15
SIGNATURE SERIES
FINISH: SATIN NICKEL

PRODUCT: HALIFAX SINGLE CYLINDER DEADBOLT
ITEM#: 158SQT155MT
SIGNATURE SERIES

TYPICAL FRENCH DOOR INSTALLATION



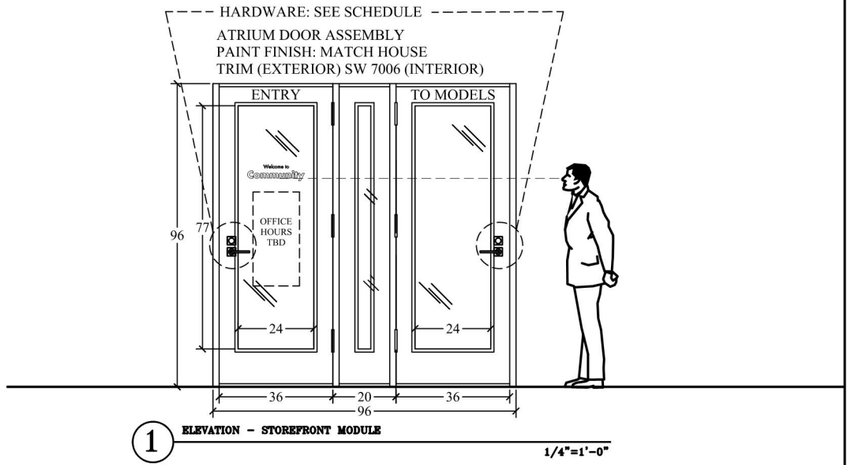

1 ELEVATION – STOREFRONT MODULE

1/4"=1'-0"

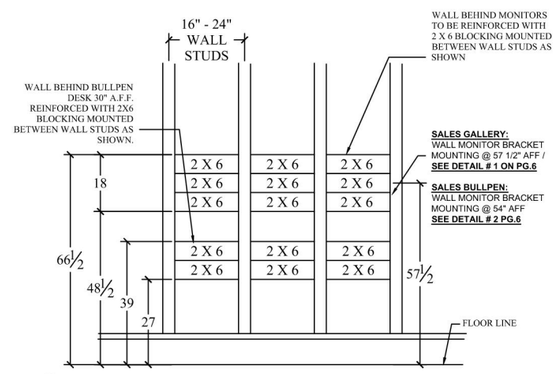

2 ELEVATION – SALES GALLERY MONITOR WALL AND BULLPEN MONITOR WALL

1/4"=1'-0"

NOTES

1. DRAWINGS AND SPECIFICATIONS ARE FOR PURPOSES OF COMMUNICATING DESIGN INTENT. SOME ITEMS NOTED ARE NOT INDICATED ON THE FLOOR PLAN. REFER TO THE FABRICATION AGREEMENT FOR ADDITIONAL INFORMATION.

2. ALL PERMITS REQUIRED FOR CONSTRUCTION SHALL BE SECURED BY THE CLIENT'S GENERAL CONTRACTOR OR THEIR AGENT(S).

3. ALL PORTIONS OF THIS SALES OFFICE SHALL COMPLY WITH LOCAL AND FEDERAL ACCESSIBILITY REQUIREMENTS.

4. OMIT CONCRETE TIRE STOP AT GARAGE CONSTRUCTION, WHERE APPLICABLE.

5. PROVIDE FURRING AT ALL PERIMETER STEM WALLS FOR A FLUSH CONDITION, WHERE REQUIRED.

6. FINISHED DIMENSIONS AFTER DRYWALL.

Quest
QUEST DESIGN & FABRICATION, LLC.
13720 Stafford Rd.,Ste 100
Stafford, Texas 77477
281-240-9416 (p)
281-240-9385 (f)

PROJECT NO.: 25406

DRAWN BY: AR/KG

CHECKED BY:AR

DATE: 06.17.2021

DATE REVISED:
⚠ 07.22.2021 - DP completed
⚠ 01.06.2022 - Updated Drawing Set
⚠ 01.10.2022 - Updated DP

MERITAGE HOMES - UNIVERSAL LiVE.NOW. - SFL
FONTANA - LOT#1 - T163 - RIGHT
FRAMING PLAN & STOREFRONT DETAILS

SHEET

2

© 2021. Quest Design & Millwork. All rights reserved.
Quest Design & Millwork is the sole owner of this design. The reproduction or use (including any fabrication of the items in this design), in part or in whole, without the written permission of Quest Design & Millwork is prohibited.

SALES OFFICE WALL PAINT PLAN

SCALE: NTS

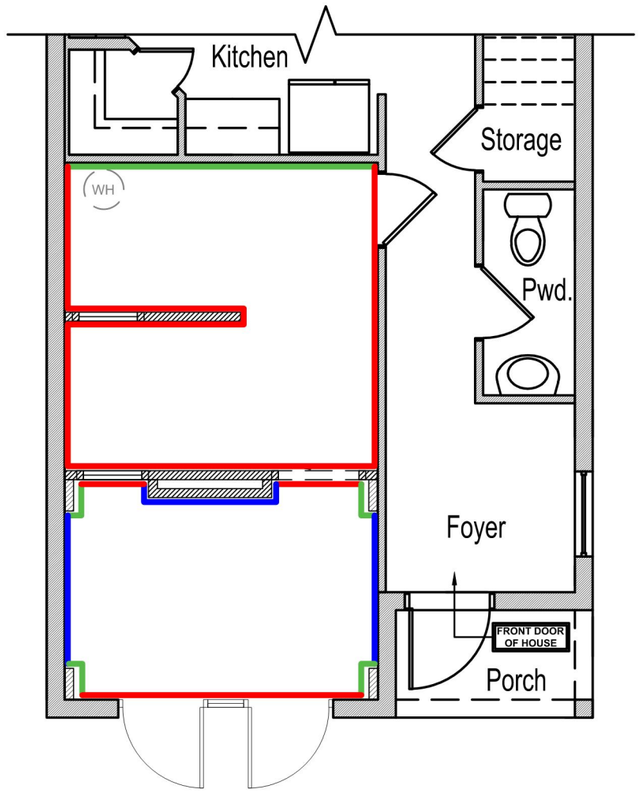

SALES OFFICE CEILING PAINT PLAN

SCALE: NTS

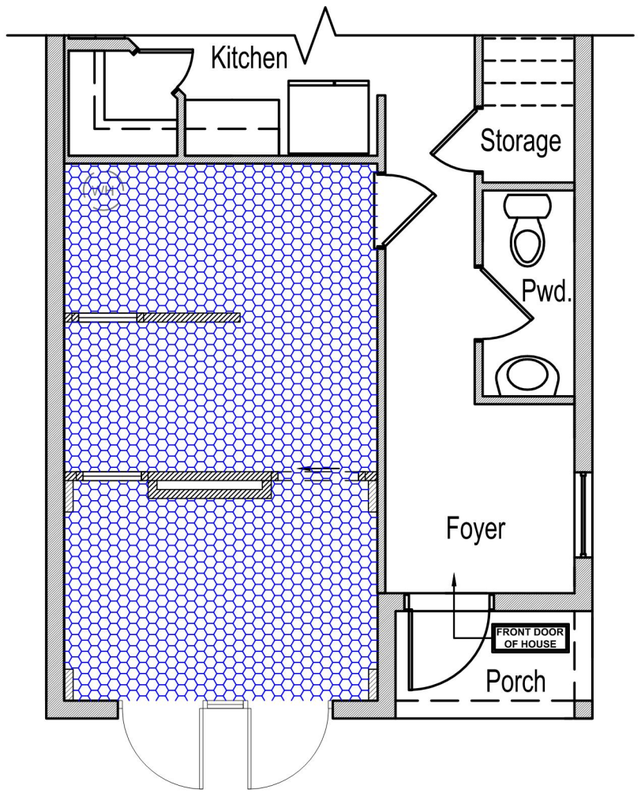

NOTES

1. DRAWINGS AND SPECIFICATIONS ARE FOR PURPOSES OF COMMUNICATING DESIGN INTENT. SOME ITEMS NOTED ARE NOT INDICATED ON THE FLOOR PLAN. REFER TO THE FABRICATION AGREEMENT FOR ADDITIONAL INFORMATION.
2. ALL PERMITS REQUIRED FOR CONSTRUCTION SHALL BE SECURED BY THE CLIENT'S GENERAL CONTRACTOR OR THEIR AGENT(S).
3. ALL PORTIONS OF THIS SALES OFFICE SHALL COMPLY WITH LOCAL AND FEDERAL ACCESSIBILITY REQUIREMENTS.
4. OMIT CONCRETE TIRE STOP AT GARAGE CONSTRUCTION, WHERE APPLICABLE.
5. PROVIDE FURRING AT ALL PERIMETER STEM WALLS FOR A FLUSH CONDITION, WHERE REQUIRED.
6. **FINISHED DIMENSIONS AFTER DRYWALL.**

COLOR SCHEDULE:

OVERALL WALL COLOR:
MFR.- SHERWIN WILLIAMS
COLOR- SW 7641, COLLONADE GRAY
SHEEN: EGGSHELL

DOORS AND TRIM: (INCLUDING BARN DOORS)
MFR.- SHERWIN WILLIAMS
COLOR: SW 7006, EXTRA WHITE
SHEEN: SEMI-GLOSS

ACCENT WALLS:
MFR.- SHERWIN WILLIAMS
COLOR: SW 6236, GRAYS HARBOR
SHEEN: EGGSHELL

ACCENT WALLS:
MFR.- SHERWIN WILLIAMS
COLOR: SW 7006, EXTRA WHITE
SHEEN: EGG SHELL

CEILING FINISHES:

C100 PAINT
MFR: SHERWIN WILLIAMS
COLOR- SW 7006, EXTRA WHITE
SHEEN: FLAT

QUEST DESIGN
& FABRICATION, LLC.
13720 Stafford Rd.,Ste 100
Stafford, Texas 77477
281-240-9416 (p)
281-240-9385 (f)

PROJECT NO.: 25406

DRAWN BY: AR/KG

CHECKED BY:AR

DATE: 06.17.2021

DATE REVISED:
07.22.2021 - DP completed
01.06.2022 - Updated Drawing Set
01.10.2022 - Updated DP

MERITAGE HOMES - UNIVERSAL LiVE.NOW. - SFL
FONTANA - LOT#1 - T163 - RIGHT
PAINT FINISH PLAN

SHEET

3

© 2021. Quest Design & Millwork. All rights reserved.
Quest Design & Millwork is the sole owner of this design. The reproduction or use (including any fabrication of the items in this design), in part or in whole, without the written permission of Quest Design & Millwork is prohibited.

SALES OFFICE FLOOR FINISH PLAN

SCALE: 1/4"=1'

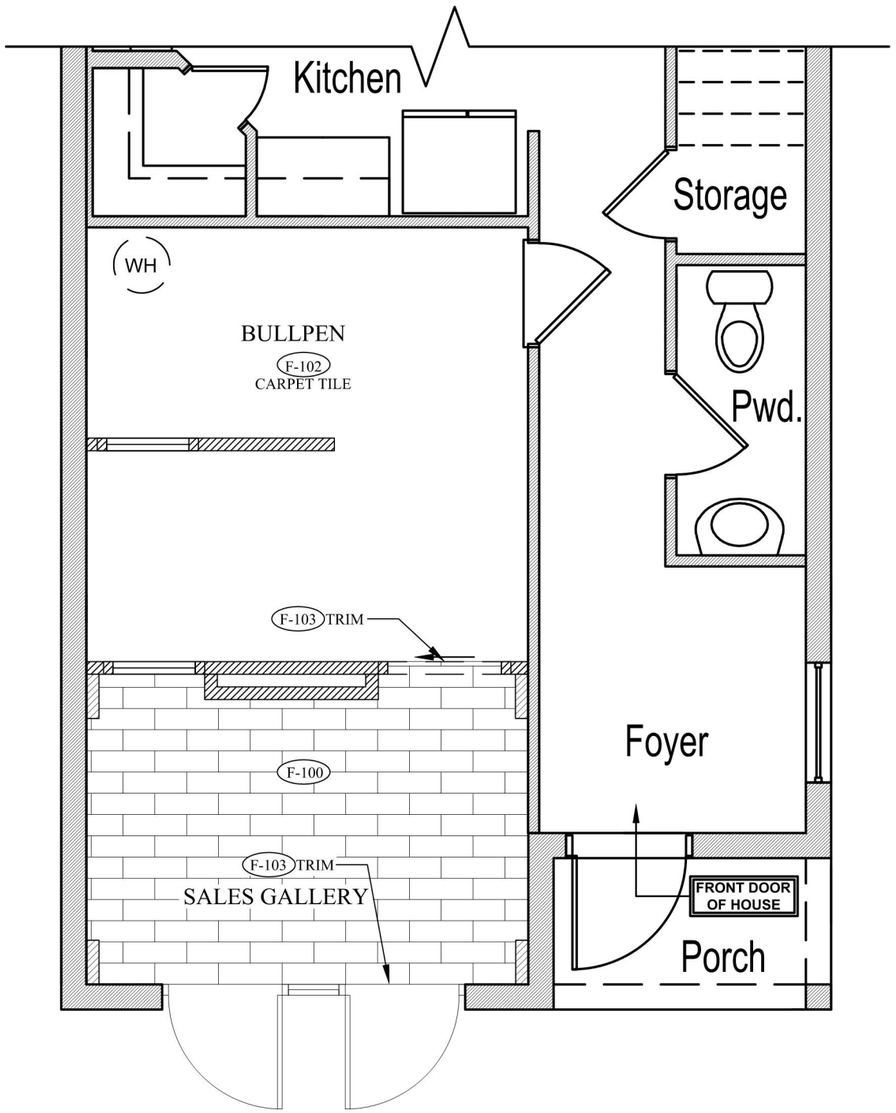

F-101
CARPET TILES IN GALLERY

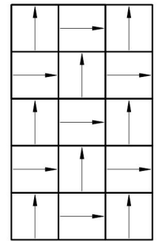

FLOORING LAYOUT: QUARTER TURN PATTERN

F-102
CARPET TILES IN BULLPEN

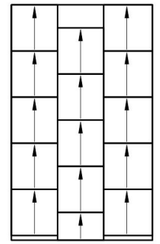

FLOORING LAYOUT: ASHLAR PATTERN

F-100
VINYL IN GALLERY

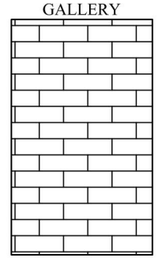

FLOORING LAYOUT: RANDOM LENGTH

NOTES

1. DRAWINGS AND SPECIFICATIONS ARE FOR PURPOSES OF COMMUNICATING DESIGN INTENT. SOME ITEMS NOTED ARE NOT INDICATED ON THE FLOOR PLAN. REFER TO THE FABRICATION AGREEMENT FOR ADDITIONAL INFORMATION.
2. ALL PERMITS REQUIRED FOR CONSTRUCTION SHALL BE SECURED BY THE CLIENT'S GENERAL CONTRACTOR OR THEIR AGENT(S).
3. ALL PORTIONS OF THIS SALES OFFICE SHALL COMPLY WITH LOCAL AND FEDERAL ACCESSIBILITY REQUIREMENTS.
4. OMIT CONCRETE TIRE STOP AT GARAGE CONSTRUCTION, WHERE APPLICABLE.
5. PROVIDE FURRING AT ALL PERIMETER STEM WALLS FOR A FLUSH CONDITION, WHERE REQUIRED.

FLOOR FINISHES:

NOTE: DESIGN CENTER TO ORDER AND INSTALL
NOTE: 2 WEEK MINIMUM ORDER LEAD TIME ON MATERIALS

VINYL PLANK F-100:
MFR: SHAW HARD SURFACE
STYLE: VE221 DOWNTOWN USA, 12MIL
COLOR: 740 BROADWAY
SIZE: 6" X 48" NOMINAL
LAY: RANDOM
CONSTRUCTION: 20 MIL LVT

CARPET F-101:
MFR: SHAW CONTRACT GROUP
STYLE: J0187 IMMERSE
COLOR: 87400 FOCUS
LAY: QUARTER-TURN

CARPET F-102:
MFR: SHAW CONTRACT GROUP
STYLE: J0187 IMMERSE
COLOR: 87400 FOCUS
LAY: ASHLAR

BACKUP CARPET TILE:
NOTE: NEEDS MARKETING MANAGER APPROVAL
MFR: SHAW CONTRACT GROUP
STYLE: 54492 WIRED
COLOR: 925988 STARTLED
LAY: QUARTER TURN IN SALES GALLERY; ASHLAR IN BULLPENS

TRANSITION STRIP TRIM- F103
NOTE: CONTRACTOR TO VERIFY TRIM PER SLAB AND FLOORING THICKNESS
NOTE: FLOOR FINISHES- DESIGN CENTER TO ORDER & INSTALL.
NOTE: 2 WEEK MINIMUM LEAD TIME ON FINISHES

MFR: SCHLUTER SYSTEMS
STYLE: SCHENE
SIZE: 3/16"
FINISH: SATIN ANODIZED ALUMINUM, AE45

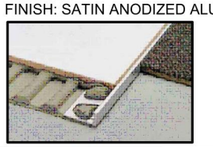

BASEBOARD:
NOTE: INSTALL BASEBOARD IN BULLPENS AFTER CABINETS ARE INSTALLED.



R.E. BASE
1/2" X 5 1/2"
MDF-206A PRIMED MDF OR SIMILAR

QUEST DESIGN
& FABRICATION, LLC.
13720 Stafford Rd.,Ste 100
Stafford, Texas 77477
281-240-9416 (p)
281-240-9385 (f)

PROJECT NO.: 25406
DRAWN BY: AR/KG
CHECKED BY:AR
DATE: 06.17.2021

DATE REVISED:
1 07.22.2021 - DP completed
2 01.06.2022 - Updated Drawing Set
3 01.10.2022 - Updated DP

MERITAGE HOMES - UNIVERSAL LiVE.NOW. - SFL
FONTANA - LOT#1 - T163 - RIGHT
FLOOR FINISH PLAN

SHEET
4

© 2021. Quest Design & Millwork. All rights reserved.
Quest Design & Millwork is the sole owner of this design. The reproduction or use (including any fabrication of the items in this design), in part or in whole, without the written permission of Quest Design & Millwork is prohibited.

NOTE: MERITAGE IT DEPT HAS STANDARDIZED THE LOCATION OF ELECTRICAL & LOW VOLTAGE. DO NOT DEVIATE FROM WHAT IS ON DRAWING SET

SALES OFFICE LIGHTING/ELECTRICAL & LOW VOLTAGE PLAN

SCALE: 1/4"=1'

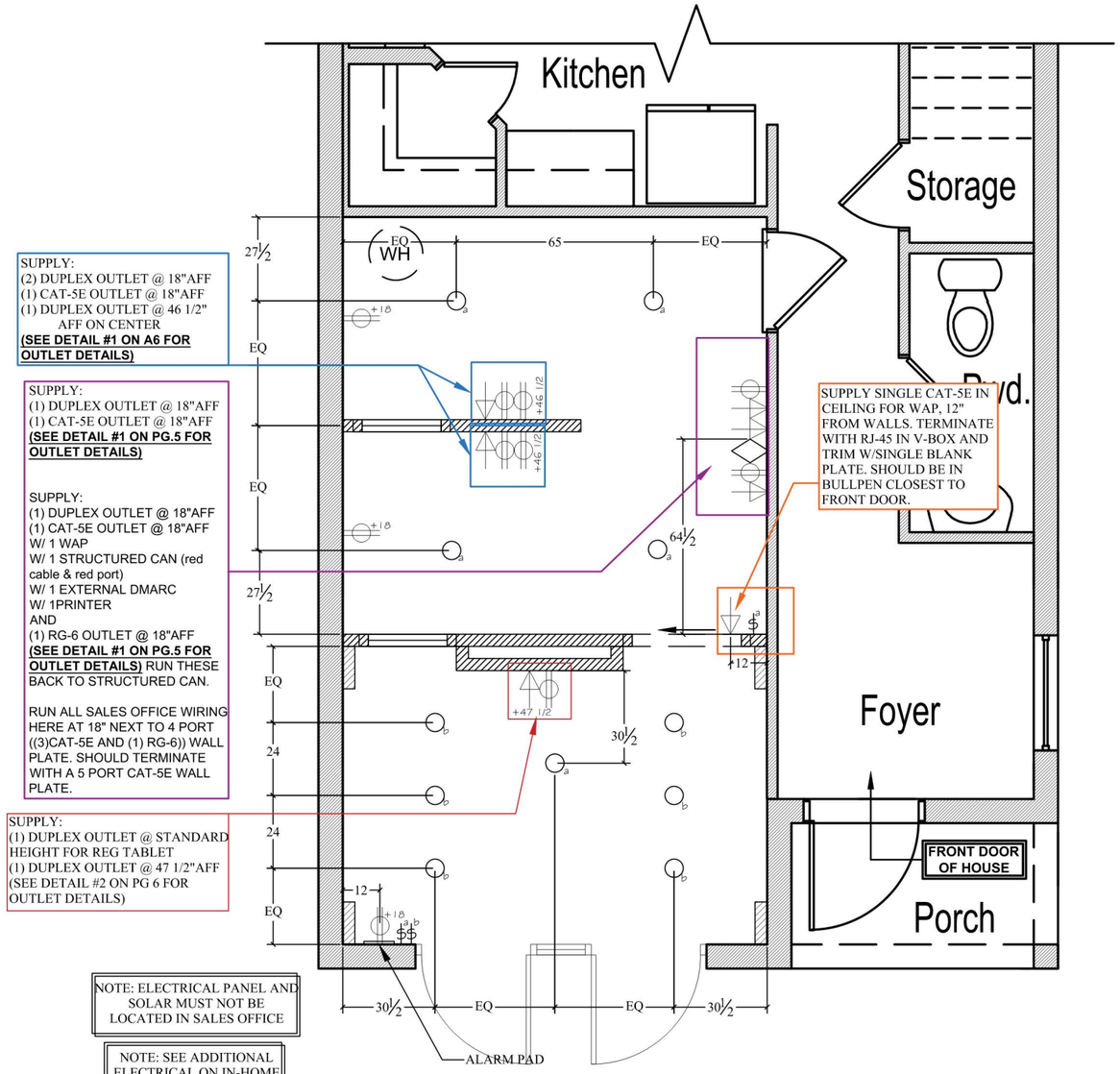

IT LEGEND

- MR42/WAP LOCATION
- KIOSK TV LOCATION - BPs
- SECURITY MONITOR LOCATION (**OPTIONAL - PER DIV REQUEST**)
- TECH STACK/IT SHELF LOCATION
- KIOSK TV LOCATION - SG

NOTES

1. DRAWINGS AND SPECIFICATIONS ARE FOR PURPOSES OF COMMUNICATING DESIGN INTENT. SOME ITEMS NOTED ARE NOT INDICATED ON THE FLOOR PLAN.
2. COORDINATE EXTERIOR FIXTURE SELECTION WITH BUILDERS HOME DESIGNS.
3. **FINISHED DIMENSIONS AFTER DRYWALL.**

ELECT. SYMBOL LEGEND

LED WAFER LIGHT
MFR: SEAGULL LIGHTING
COLLECTION: TRAVERSE II
SPEC: 6" TRAVERSE 3000K
90 CRI WHITE
PRODUCT: #14810S-15
DIMMING RANGE: 5-100%

- DUPLEX RECEPTACLE
- TELEPHONE OUTLET
- CAT-5E DATA
- RG-6
- SWITCH TO CORRESPOND WITH LETTER AS NOTED ON PLAN

NOTE:
ALL ELECTRICAL OUTLETS TO BE MOUNTED AT STANDARD HEIGHT UNLESS OTHERWISE NOTED.

ELECTRICAL NOTES:

A. ALL ELECTRICAL COMPONENTS TO BE INSTALLED PER 2002 NEC REQUIREMENTS.

B. THE GENERAL CONTRACTOR SHALL SECURE ALL PERMITS REQUIRED TO PERFORM ALL ELECTRICAL WORK.

NOTE: THIS DIAGRAM MAY MIRROR/FLIP DEPENDING ON PLAN MODEL ORIENTATION OF TIGHT OR LEFT OF GARAGE PLAN.

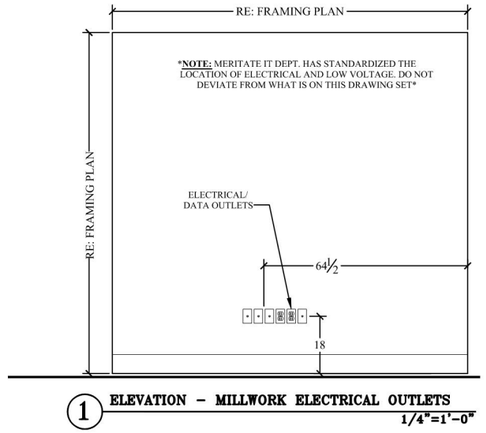

1 **ELEVATION – MILLWORK ELECTRICAL OUTLETS**
1/4"=1'-0"

QUEST DESIGN & FABRICATION, LLC.
13720 Stafford Rd.,Ste 100
Stafford, Texas 77477
281-240-9416 (p)
281-240-9385 (f)

PROJECT NO.: 25406

DRAWN BY: AR/KG

CHECKED BY:AR

DATE: 06.17.2021

DATE REVISED:
⚠1 07.22.2021 - DP completed
⚠2 01.06.2022 - Updated Drawing Set
⚠3 01.10.2022 - Updated DP

MERITAGE HOMES - UNIVERSAL LiVE.NOW. - SFL
FONTANA - LOT#1 - T163 - RIGHT
LIGHTING/ELECTRICAL & LOW VOLTAGE PLAN

SHEET
5

© 2021. Quest Design & Millwork. All rights reserved.
Quest Design & Millwork is the sole owner of this design. The reproduction or use (including any fabrication of the items in this design), in part or in whole, without the written permission of Quest Design & Millwork is prohibited.

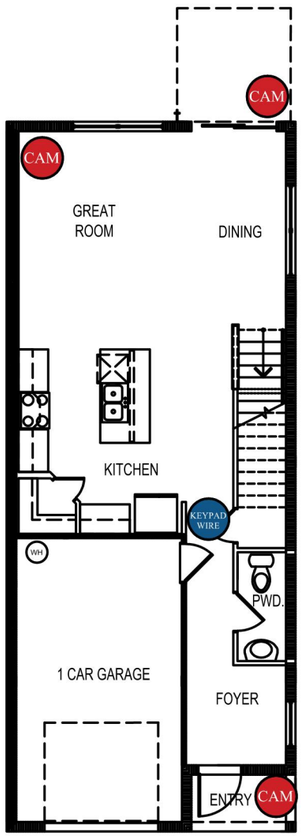

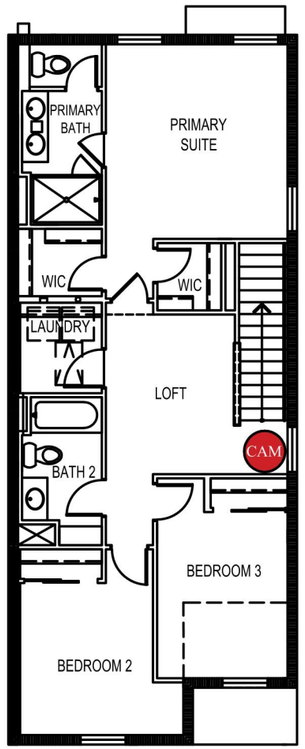

NOTES

- - CAT 5 WIRING SHOULD BE RAN TO EACH DESIGNATED CAMERA LOCATION FROM THE TECH CLOSET/ ON Q PANEL.
- - AN NVR IS INSTALLED IN THE TECH CLOSET/ON QPANEL THAT IS CONNECTED BY AN ETHERNET CABLE FROM THE SALES OFFICE NETWORK CABINETS (SEE PG.5) TO RECORD THE FEED FROM ALL CAMERAS.
- - CAMERA LOCATIONS ARE PROVIDED BY THE MARKETING MANAGER WHO SET UP THE MODEL ORDER.
- WIRING IS INSTALLED BY A LOW VOLTAGE VENDOR.

SECURITY LEGEND

CAMERA

KEYPAD WIRE

MODEL SECURITY CAMERA PLACEMENT PLAN

FIRST FLOOR SCALE: 3/32"=1'

MODEL SECURITY CAMERA PLACEMENT PLAN

SECOND FLOOR SCALE: 3/32"=1'

QUEST DESIGN
& FABRICATION, LLC.
13720 Stafford Rd.,Ste 100
Stafford, Texas 77477
281-240-9416 (p)
281-240-9385 (f)

PROJECT NO.: 25406

DRAWN BY: AR/KG

CHECKED BY:AR

DATE: 06.17.2021

DATE REVISED:
1 07.22.2021 - DP completed
2 01.06.2022 - Updated Drawing Set
3 01.10.2022 - Updated DP

MERITAGE HOMES - UNIVERSAL LiVE.NOW. - SFL
FONTANA - LOT#1 - T163 - RIGHT
UNIVERSAL CAMERA PLACEMENT PLAN

SHEET

5.1

© 2021. Quest Design & Millwork. All rights reserved.
Quest Design & Millwork is the sole owner of this design. The reproduction or use (including any fabrication of the items in this design), in part or in whole, without the written permission of Quest Design & Millwork is prohibited.

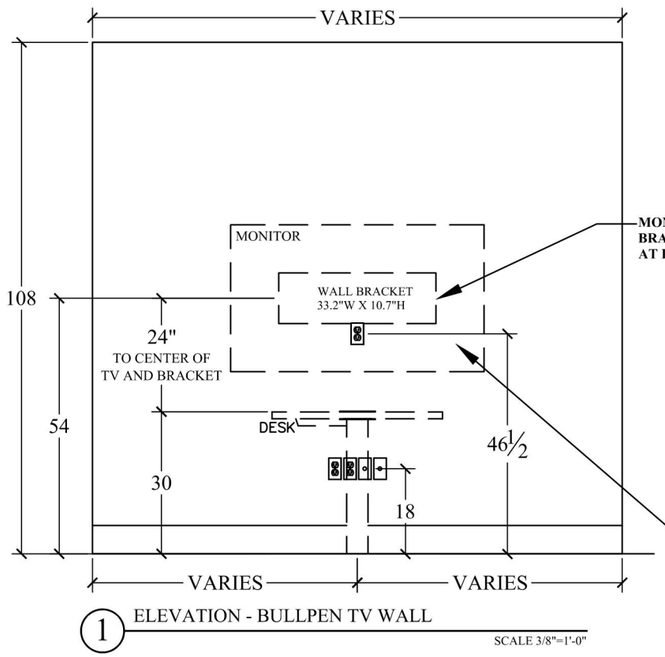

1 ELEVATION - BULLPEN TV WALL

SCALE 3/8"=1'-0"

NOTE:
WALLS TO RECEIVE 2 X 6
BLOCKING BEHIND MONITOR
- **SEE DETAIL #2 ON PG.2**

TYPICAL BARN DOOR

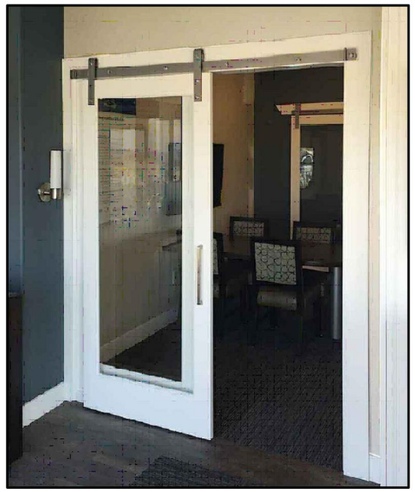

BARN DOOR SPECIFICATIONS

NOTE: FINISHED DIMENSIONS AFTER DRYWALL.

DOOR
MFR: LOCAL TO BID

9'-0 CEILING
DOOR STYLE: 3068 PRIMED SINGLE PANE GLASS DOOR (TEMPERED GLASS)
SPECIES/COLOR: PAINT GRADE, PAINTED W/TRIM PAINT COLOR

10'-0 CEILING
DOOR STYLE: 3080 PRIMED SINGLE PANE GLASS DOOR (TEMPERED GLASS)
SPECIES/COLOR: PAINT GRADE, PAINTED W/TRIM PAINT COLOR

BARN DOOR TRACK HARDWARE
MFR: RUSTICA HARDWARE
STYLE: ULTRA MODERN BARN DOOR HARDWARE
COLOR/FINISH: BRUSHED STEEL
WHEEL STYLE: CONCAVE METAL
CONTACT: 1-800-891-6312/WWW.RUSTICAHARDWARE.COM

BARN DOOR TRACK HARDWARE/2ND OPTION
MFR: GOLDBERG BROTHERS
STYLE: SLIDING BARN DOOR TRACK HARDWARE 6001 DOOR TRACK
COLOR/FINISH: STAINLESS STEEL
WHEEL STYLE: TOP MOUNT
CONTACT: WWW.GOLDBERGBROTHERS.COM

FRONT BARN DOOR HARDWARE
MFR: AMEROCK HARDWARE
STYLE: BLACKROCK 12" CENTERS APPLIANCE PULLS
ITEM# AME-61606
COLOR/FINISH: SATIN NICKEL
SIZE: 13 3/8" X 1" X 1 3/4"
CONTACT: 1-866-695-6627/WWW.MYKNOBS.COM

BACK BARN DOOR HARDWARE
MFR: SCHWINN HARDWARE
STYLE: 3 3/4" x CENTERS RECESSED PULL
ITEM# SCH-107246
COLOR/ FINISH: SATIN NICKEL
SIZE: 4 3/16" x 1/2" x 1/16"
CONTACT: 1-866-695-6627/WWW.MYKNOBS.COM

BARN DOOR OPENING CASINGS
JAMB: 4-9/16" FULL BOUND ON FIXED SIDE
4-9/16" CASED OPENINGS ON ACTIVE SIDE
(MULLED TOGETHER AT CENTER)
CASING: MDF 236A- 3 1/4" ROUND EDGE CASING

NOTE: DO NOT PROVIDE CONTINUOUS BACKING FOR MOUNTING RAILS THAT TOP DOOR SLIDES ON

INSTALLER
ADJUST PROVIDED SPACERS IN THE FIELD TO 1/8" FROM WALL FOR MINIMAL GAPS

NOTE
HARDWARE TO BE BID

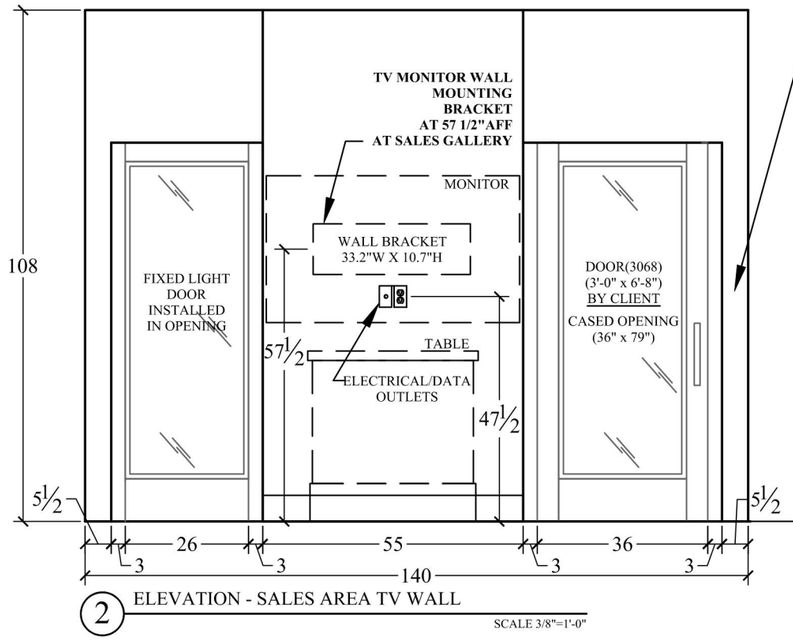

2 ELEVATION - SALES AREA TV WALL

SCALE 3/8"=1'-0"

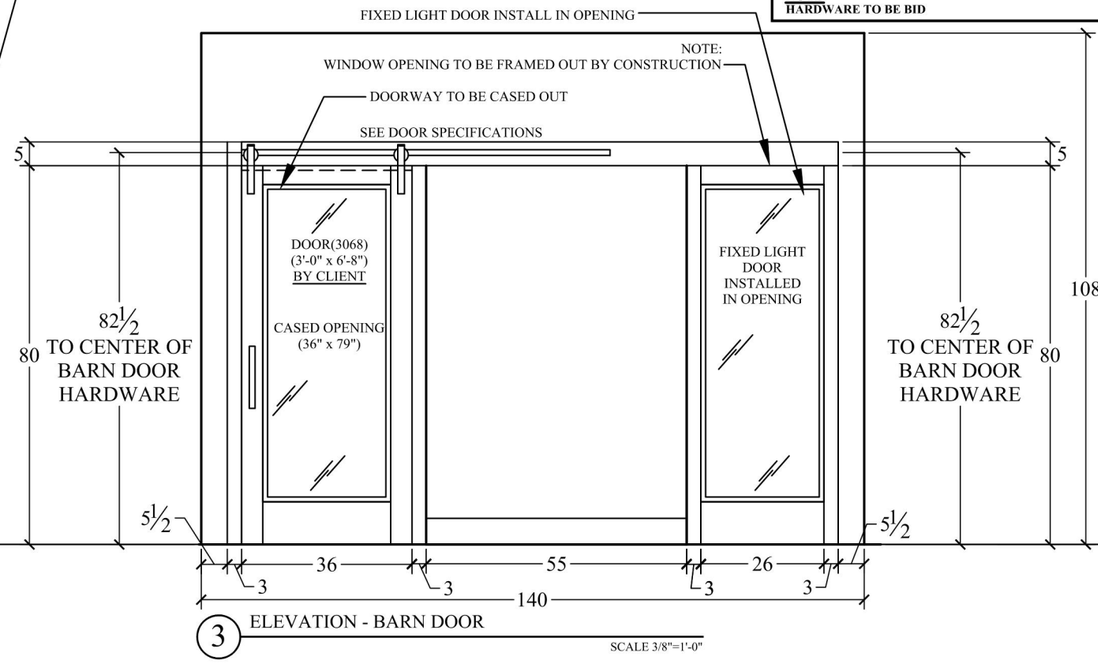

3 ELEVATION - BARN DOOR

SCALE 3/8"=1'-0"

© 2021. Quest Design & Millwork. All rights reserved.
Quest Design & Millwork is the sole owner of this design. The reproduction or use (including any fabrication of the items in this design), in part or in whole, without the written permission of Quest Design & Millwork is prohibited.

QUEST DESIGN
& FABRICATION, LLC.
13720 Stafford Rd.,Ste 100
Stafford, Texas 77477
281-240-9416 (p)
281-240-9385 (f)

PROJECT NO.: 25406

DRAWN BY: AR/KG

CHECKED BY:AR

DATE: 06.17.2021

DATE REVISED:
1 07.22.2021 - DP completed
2 01.06.2022 - Updated Drawing Set
3 01.10.2022 - Updated DP

MERITAGE HOMES - UNIVERSAL LiVE.NOW. - SFL
FONTANA - LOT#1 - T163 - RIGHT
BARN DOOR DETAILS

SHEET

6

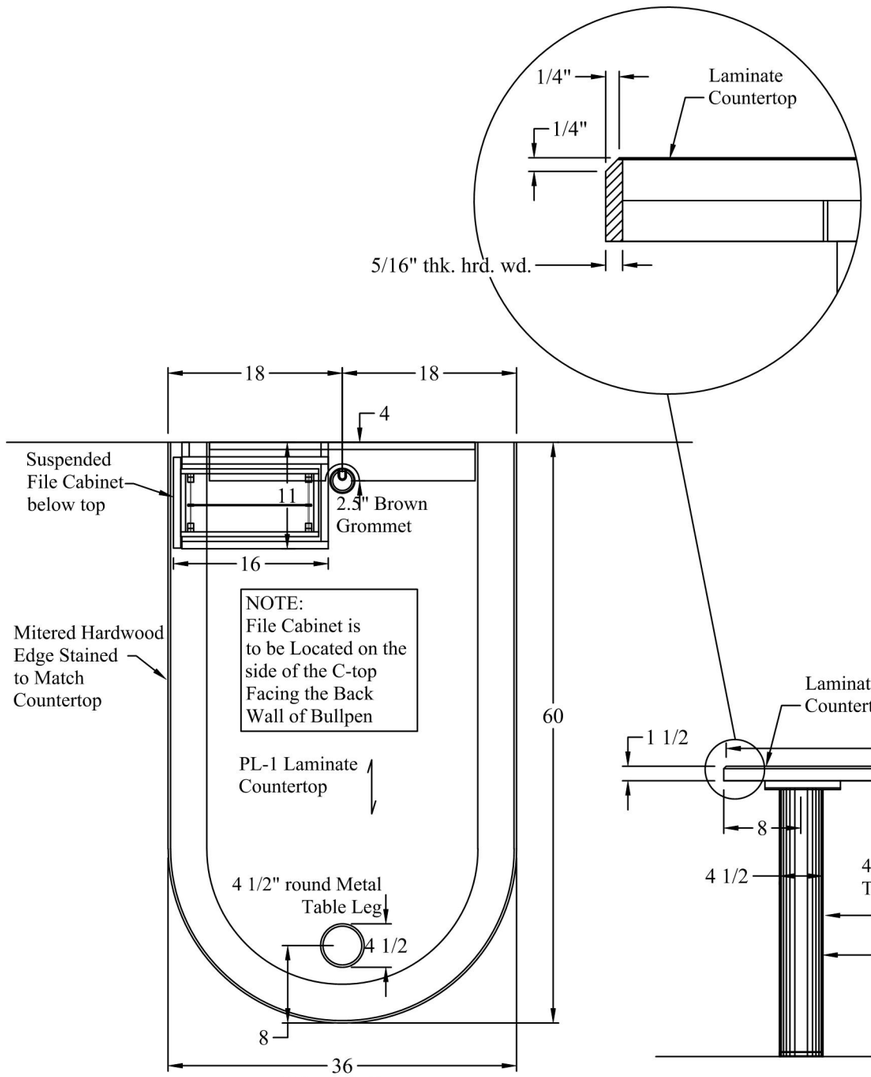

Plan View

NOTE:
CABINETS AND COUNTERTOPS PROVIDED BY QUEST AND INSTALLED BY OTHERS.

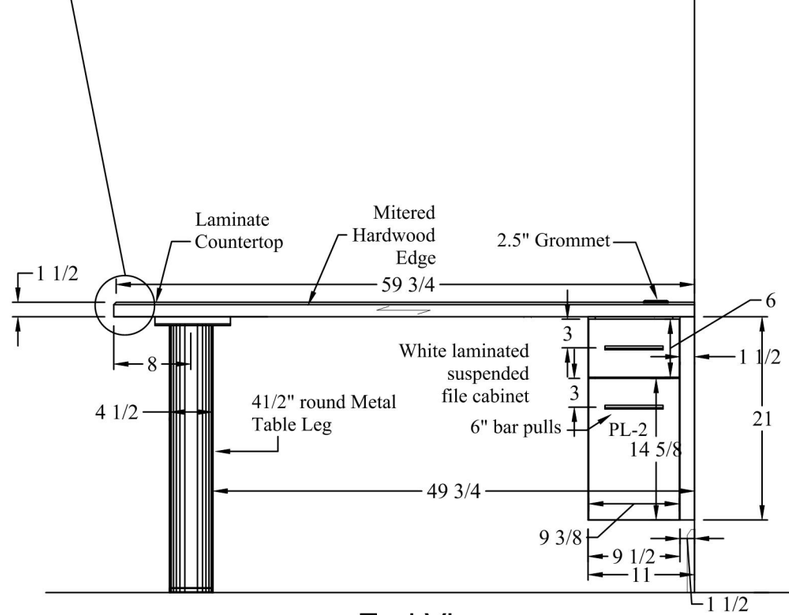

End View

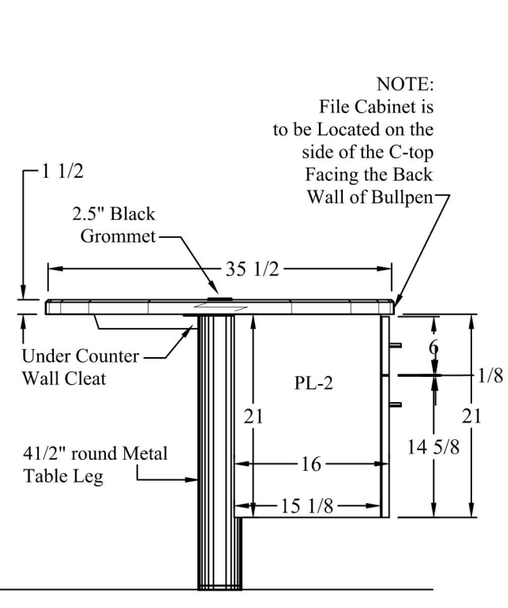

Front View

QUEST DESIGN
& FABRICATION, LLC.
13720 Stafford Rd.,Ste 100
Stafford, Texas 77477
281-240-9416 (p)
281-240-9385 (f)

PROJECT NO.: 25406

DRAWN BY: AR/KG

CHECKED BY:AR

DATE: 06.17.2021

DATE REVISED:
1 07.22.2021 - DP completed
2 01.06.2022 - Updated Drawing Set
3 01.10.2022 - Updated DP

MERITAGE HOMES - UNIVERSAL LiVE.NOW. - SFL
FONTANA - LOT#1 - T163 - RIGHT
UNIVERSAL DESK DETAILS

SHEET
7

© 2021. Quest Design & Millwork. All rights reserved.
Quest Design & Millwork is the sole owner of this design. The reproduction or use (including any fabrication of the items in this design), in part or in whole, without the written permission of Quest Design & Millwork is prohibited.

NOTE:
CABINETS AND COUNTERTOPS PROVIDED AND INSTALLED BY OTHERS.

NOTE: ELECTRICAL AND LOW VOLTAGE DATA DIAGRAM ON PAGE 5

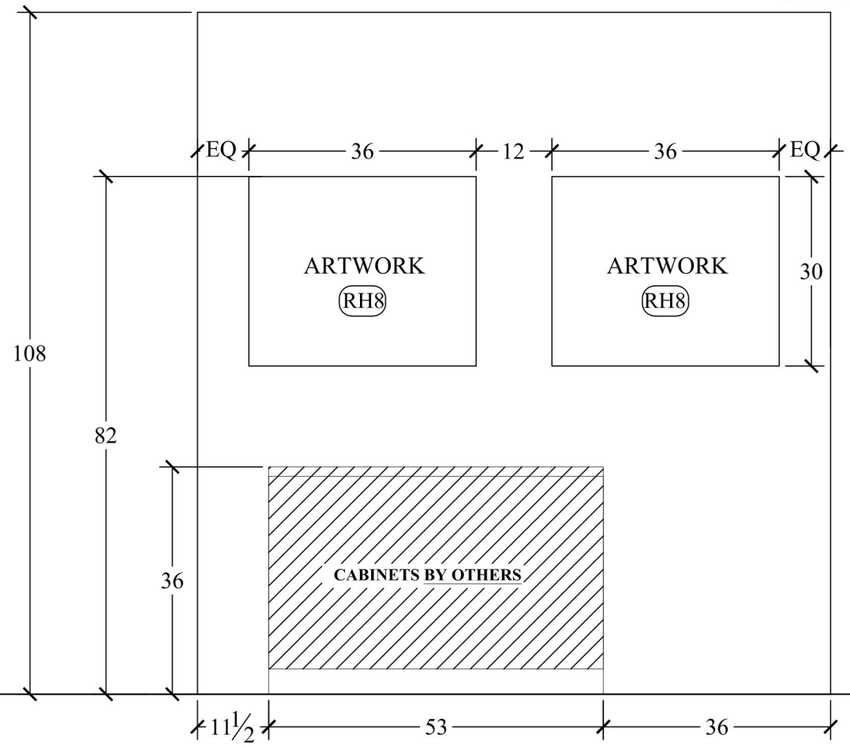

1 ELEVATION - BULLPEN 1 CABINETS
1/2"=1'-0"

NOTES

1. DRAWINGS AND SPECIFICATIONS ARE FOR PURPOSES OF COMMUNICATING DESIGN INTENT. SOME ITEMS NOTED ARE NOT INDICATED ON THE FLOOR PLAN.
2. ALL PERMITS REQUIRED FOR CONSTRUCTION SHALL BE SECURED BY THE CLIENT'S GENERAL CONTRACTOR OR THEIR AGENT(S).
3. ALL PORTIONS OF THIS SALES OFFICE SHALL COMPLY WITH LOCAL AND FEDERAL ACCESSIBILITY REQUIREMENTS
4. OMIT CONCRETE TIRE STOP AT GARAGE CONSTRUCTION, WHERE APPLICABLE
5. PROVIDE FURRING AT ALL PERIMETER STEM WALLS FOR A FLUSH CONDITION, WHERE REQUIRED.
6. **FINISHED DIMENSIONS AFTER DRYWALL.**

MILLWORK SPECS:

OVERALL PAINT:
MFR: SHERWIN WILLIAMS
COLOR: SW 7006, EXTRA WHITE
SHEEN: SATIN SHEEN
NOTE: CONSTRUCTION TRADES DO NOT NEED TO PAINT

HARDWARE:
MFR: HAFELE #117.97.660
96MM CTC BRUSHED NICKEL
NOTE: WILL ALREADY BE INSTALLED

COUNTERTOP:
TYPE: PAINTED WOODTOP
COLOR: WHITE
NOTE: TO BE FABRICATED & INSTALLED BY TIMBERLAKE CABINET COMPANY

QUEST DESIGN
& FABRICATION, LLC.
13720 Stafford Rd.,Ste 100
Stafford, Texas 77477
281-240-9416 (p)
281-240-9385 (f)

PROJECT NO.: 25406
DRAWN BY: AR/KG
CHECKED BY:AR
DATE: 06.17.2021

DATE REVISED:
1 07.22.2021 - DP completed
2 01.06.2022 - Updated Drawing Set
3 01.10.2022 - Updated DP

MERITAGE HOMES - UNIVERSAL LiVE.NOW. - SFL
FONTANA - LOT#1 - T163 - RIGHT
BULLPEN CABINETRY DETAILS

SHEET
8

© 2021. Quest Design & Millwork. All rights reserved.
Quest Design & Millwork is the sole owner of this design. The reproduction or use (including any fabrication of the items in this design), in part or in whole, without the written permission of Quest Design & Millwork is prohibited.

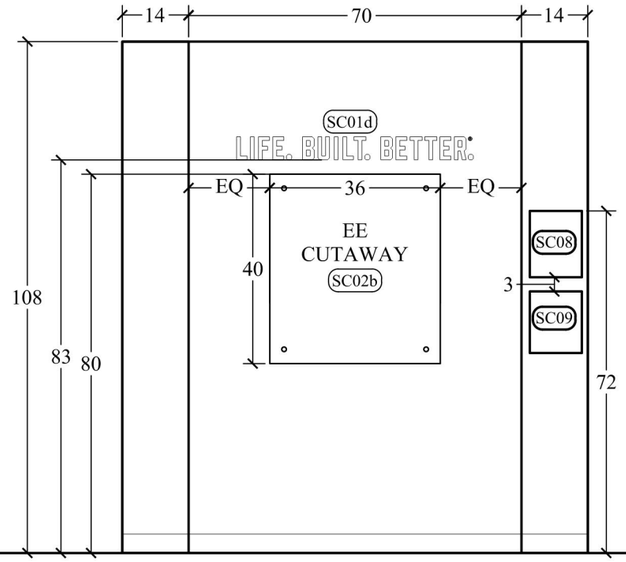

1 ELEVATION - SALES GALLERY

Scale: 3/8"=1'

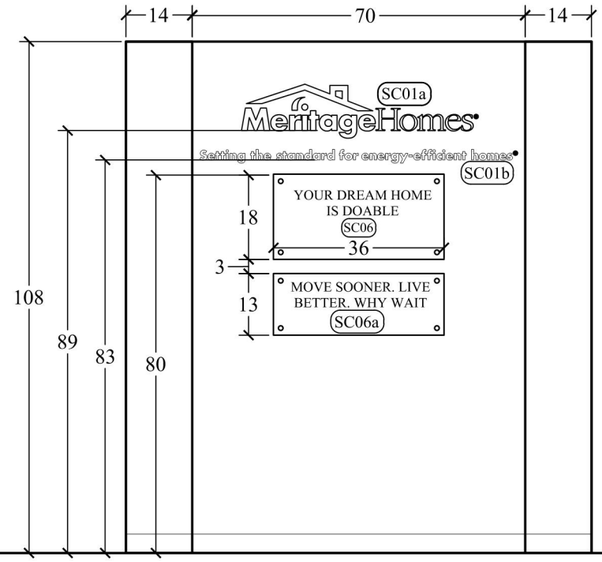

2 ELEVATION - SALES GALLERY

Scale: 3/8"=1'

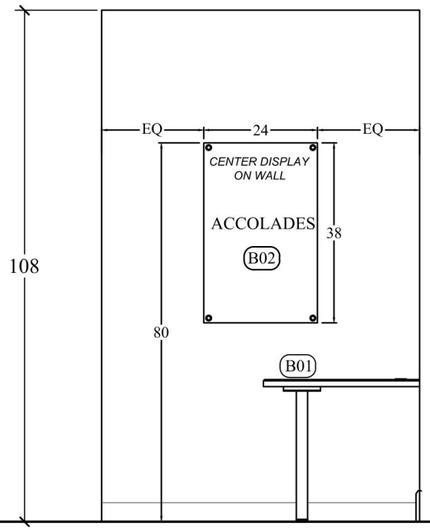

3 ELEVATION - BULLPEN 1

Scale: 3/8"=1'

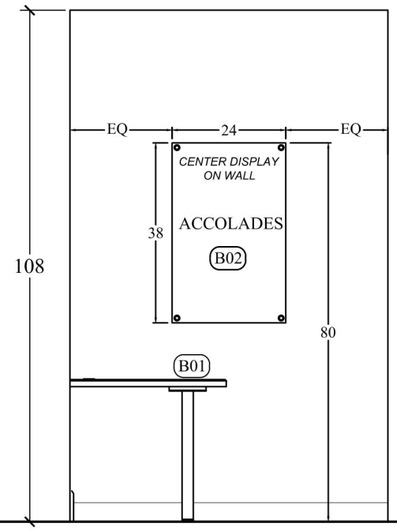

4 ELEVATION - BULLPEN 2

Scale: 3/8"=1'

© 2021. Quest Design & Millwork. All rights reserved.
Quest Design & Millwork is the sole owner of this design. The reproduction or use (including any fabrication of the items in this design), in part or in whole, without the written permission of Quest Design & Millwork is prohibited.

QUEST DESIGN
& FABRICATION, LLC.
13720 Stafford Rd.,Ste 100
Stafford, Texas 77477
281-240-9416 (p)
281-240-9385 (f)

PROJECT NO.: 25406

DRAWN BY: AR/KG

CHECKED BY:AR

DATE: 06.17.2021

DATE REVISED:
1 07.22.2021 - DP completed
2 01.06.2022 - Updated Drawing Set
3 01.10.2022 - Updated DP

MERITAGE HOMES - UNIVERSAL LiVE.NOW. - SFL
FONTANA - LOT#1 - T163 - RIGHT
SALES CENTER ELEVATIONS/DETAILS

SHEET

9

IN-HOME EE DISPLAYS

NOTES:
***HEIGHT OF THE IN-HOME EE DISPLAY SHOULD NOT EXCEED 69"(TO THE TOP OF DISPLAY).**

***WALL HUNG WITH 1/4" CLEATS**

A



IH-A: ENTRYWAY WELCOME PLAQUE @ FRONT DOOR

G



IH-G: ENTRYWAY MCONNECT @ OE ENTRY

B



IH-B: DESIGN COLLECTIONS/ LiVENOW PACKAGE EASEL

H

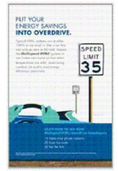

IH-H: MULTISPEED HVAC @ THERMOSTAT

C





IH-C: NOISE CONTROL PLAQUE

D



IH-D: CLIMATE SEALED HOME PLAQUE
**NOTE:* LOCATION TBD @ FRAME WALK

E



IH-E: FRESH AIR MANAGEMENT PLAQUE

F



IH-F: PEST REDUCTION SHADOW BOX @ LAUNDRY ROOM

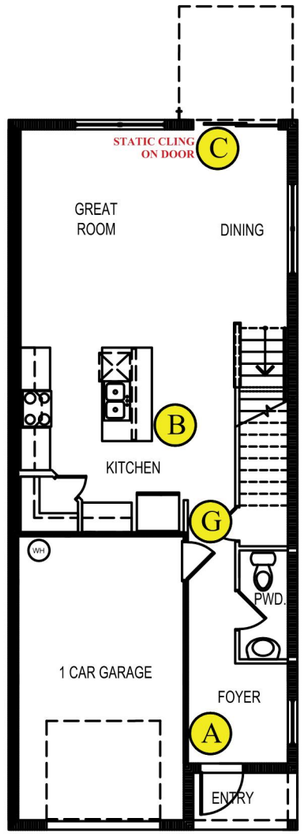

IN-HOME EE DIPLAY LAYOUT
FIRST FLOOR SCALE: 3/32"=1'

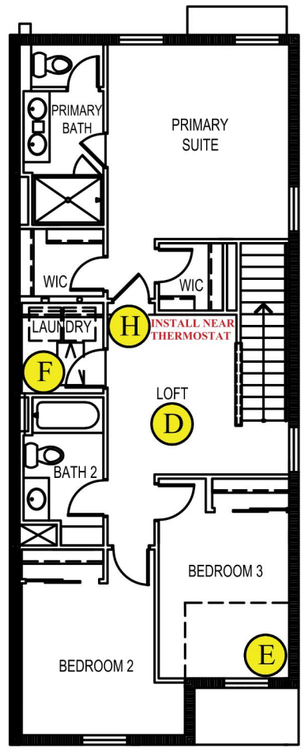

IN-HOME EE DISPLAY LAYOUT
SECOND FLOOR SCALE: 3/32"=1'

NOTE: 4X4 FRAMED CEILING CUTOUT. NO ACRYLIC UNLESS REQUIRED. USE ATTIC ACCESS LOCATION WHEN POSSIBLE

TRIM OUT OPENING WITH:
- BASECOARD/FLAT STOCK 5-6" TALL IN CUTOUT
- USE DOOR CASING PER COMMUNITY SPEC TO TRIM OUT DRYWALL CEILING

NOTE: SEE PG.11 FOR VISUAL EXAMPLE

© 2021. Quest Design & Millwork. All rights reserved.
Quest Design & Millwork is the sole owner of this design. The reproduction or use (including any fabrication of the items in this design), in part or in whole, without the written permission of Quest Design & Millwork is prohibited.

QUEST DESIGN
& FABRICATION, LLC.
13720 Stafford Rd.,Ste 100
Stafford, Texas 77477
281-240-9416 (p)
281-240-9385 (f)

PROJECT NO.: 25406
DRAWN BY: AR/KG
CHECKED BY:AR
DATE: 06.17.2021
DATE REVISED:
⚠07.22.2021 - DP completed
⚠01.06.2022 - Updated Drawing Set
⚠01.10.2022 - Updated DP

MERITAGE HOMES - UNIVERSAL LiVE.NOW. - SFL
FONTANA - LOT#1 - T163 - RIGHT
IN-HOME EE DISPLAY LAYOUT

SHEET
10

Ceiling Cutaway Placement:

- First model
    - If there are multiple sales offices or series, each one will need a cutout.
- 1-story: Secondary bedroom in line of sight
- 2-story: Stair landing at top (loft OK if stairs open into it)
- Close to wall to easily connect displays via dotted line
- Thermostat plaque should always be in line of sight from doorway
- If it makes sense following the placement standards above, attic access can be enlarged to create cutaway

Display Placement:

- **Standard**: Under ceiling cutout with dotted line going straight up connecting the displays.
- **Alternate:** If not able to place plaque under ceiling cutaway, dotted line can be removed and plaque can be standalone near cutaway.
    - Dotted line should not make left/right turns.
- In-ceiling plaque is attached above trim in the line of sight from the room's entry
- Can take off bedroom door to make room for eye-level display

Ceiling Cutaway Construction Specs:

- Size: 4'-0"x4'-0"
- Lighting: Use CFL or LED spotlight to appropriately light the attic space. Confirm proper electrical is installed during the frame walk.
- Plexi isn't recommended unless required by municipality.
- White trim surround is preferred.

How to Choose Ceiling Cutaway Placement:

- **Who:** Marketing, Construction, Display Vendor/Installer (if available), Model Merchandiser/Plan
- **When:** Between Model Kickoff and Frame Walk
- **How:**
    1. Customer experience comes first. The cutaway and display should be in the line of sight from the doorway. Determine which bedroom works best for this.
    2. Can the appropriate electrical be installed for the light?
    3. Does it interfere with model merchandising?
        a. If yes, can the merchandising be adjusted/rearranged?

Watch-outs:

- Windows and merchandising below cutaway make it difficult to place plaque with dotted line
- Confirm view of spray foam will be satisfactory and construction will be able to install light
- Ensure roof pitch will not affect display placement

LOCATION TBD @ FRAME WALK

EXAMPLE OF TYPICAL INSTALLATION

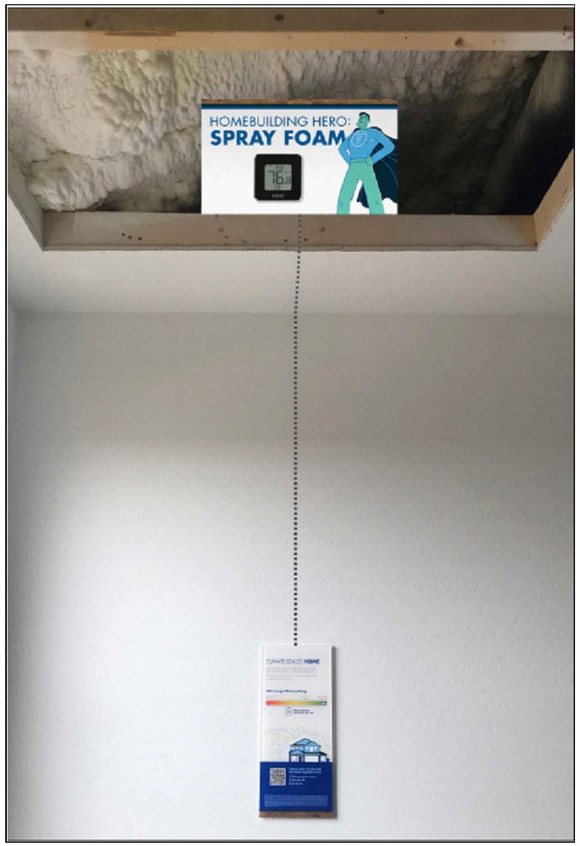



IN-HOME EE DISPLAY CEILING CUTAWAY EXAMPLE

QUEST DESIGN
& FABRICATION, LLC.
13720 Stafford Rd.,Ste 100
Stafford, Texas 77477
281-240-9416 (p)
281-240-9385 (f)

PROJECT NO.: 25406
DRAWN BY: AR/KG
CHECKED BY:AR
DATE: 06.17.2021

DATE REVISED:
⚠07.22.2021 - DP completed
⚠01.06.2022 - Updated Drawing Set
⚠01.10.2022 - Updated DP

MERITAGE HOMES - UNIVERSAL LiVE.NOW. - SFL
FONTANA - LOT#1 - T163 - RIGHT
CEILING CUTAWAY EXAMPLE

SHEET
11

© 2021. Quest Design & Millwork. All rights reserved.
Quest Design & Millwork is the sole owner of this design. The reproduction or use (including any fabrication of the items in this design), in part or in whole, without the written permission of Quest Design & Millwork is prohibited.

1) SALES BULLPEN CHAIR
MFR: RESTORATION HARDWARE
STYLE: HEA SIDE CHAIR FIL DOUX
COLOR: PEBBLE PEWTER



2) SALES GALLERY STOOL
MFR: RESTORATION HARDWARE
STYLE: HEA COUNTER STOOL FIL DOUX PEBBLE
COLOR: PEWTER



3) SALES GALLERY UPHOLSTERED SEATING
MFR: RESTORATION HARDWARE
STYLE: CLUB CHAIR REID WITLIN
COLOR: LINENATION DOVE



4) CONSOLE
MFR: RESTORATION HARDWARE
STYLE: KEYNESMEDIA CABINET



6) BULLPEN TASK CHAIR
MFR: RESTORATION HARDWARE
STYLE: MIRO-3 DESK CHAIR FIL DOUX PEBBLE
COLOR: PEWTER



7) SALES GALLERY TABLE
MFR:RESTORATION HARDWARE
STYLE: WATERFALL COUNTER TABLE WITH GLASS TOP



5) SALES GALLERY SIDE TABLE
MFR: RESTORATION HARDWARE
STYLE: CELINA SIDE TABLE



8) WALL ART
STYLE: ABSTRACT LANDSCAPE NO. 4
& ANSTRACTLANDSCAPE NO. 6
SIZE:30"H X 36"W
NO FRAME

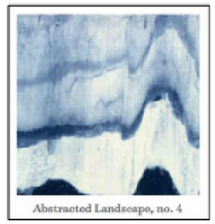

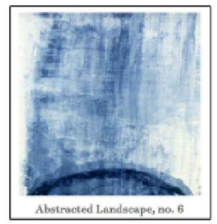

9) WINDOW SHADES (OPTIONAL, ORDER FROM DESIGN CENTER)
STYLE: ECONOSCREEN ROLLER SHADE, PLATNUM CLUTCH SYSTEM
BLACK STEEL CHAIN, BLACK FASCIA VALANCE, BLACK 3% SCREEN
LEFT PANEL- (27") X 96", CENTER PANEL (54") X 96", RIGHT PANEL- (27") X 96"
NOTE: FIELD MEASURE REQUIRED, WINDOW SIZES COULD VARY



10) DOOR MITTS (OPTIONAL, MARKETING TO ORDER)
CUSTOM CYLINDER 3.25, CIRCUM X7", LENGTH, CHOCOLATE, NO LOGO
VENDOR: DOOR MITTS, 8560 WEST DESERT INN, SUITE D4 LAS VEGAS, NV 89117, 702-744-7990

QUEST DESIGN
& FABRICATION, LLC.
13720 Stafford Rd.,Ste 100
Stafford, Texas 77477
281-240-9416 (p)
281-240-9385 (f)

PROJECT NO.: 25406
DRAWN BY: AR/KG
CHECKED BY:AR
DATE: 06.17.2021
DATE REVISED:
⚠1 07.22.2021 - DP completed
⚠2 01.06.2022 - Updated Drawing Set
⚠3 01.10.2022 - Updated DP

MERITAGE HOMES - UNIVERSAL LiVE.NOW. - SFL
FONTANA - LOT#1 - T163 - RIGHT
FURNITURE SPECIFICATIONS

SHEET
12

© 2021. Quest Design & Millwork. All rights reserved.
Quest Design & Millwork is the sole owner of this design. The reproduction or use (including any fabrication of the items in this design), in part or in whole, without the written permission of Quest Design & Millwork is prohibited.



DEMOGRAPHICS: MIX OF OLDER SINGLES AND FAMILIES

INTERIOR FINISH SELECTION – **ELEMENTAL**

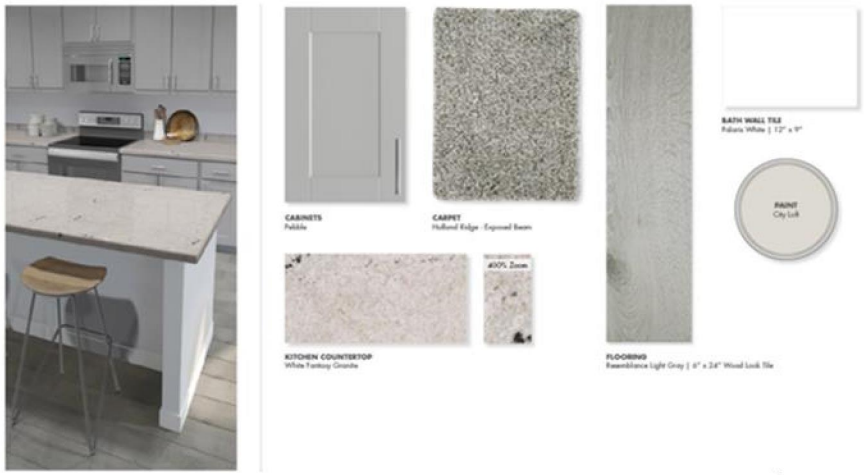

INTERMARK DESIGN GROUP

T163: FONTANA – LAKE WORTH, FL
PLAN T163 END. ELEVATION MODERN. $20/SF

LIVE.NOW.
MOVE SOONER. LIVE BETTER. WHY WAIT?

INTERIOR FINISH SELECTION – **ELEMENTAL**





CABINETS
Pebble



CARPET
Holland Ridge - Exposed Beam





KITCHEN COUNTERTOP
White Fantasy Granite



FLOORING
Remembrance Light Gray | 6" x 24" Wood Look Tile

BATH WALL TILE
Polaris White | 12" x 9"



PAINT
City Loft



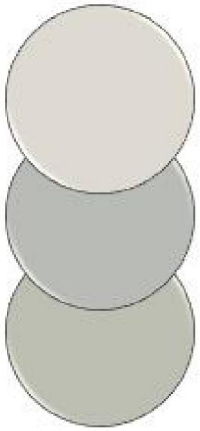





INTERMARK
DESIGN GROUP

ELEMENTAL PACKAGE
CONCEPT II

LiVE.NOW.
MOVE SOONER. LIVE BETTER. WHY WAIT?

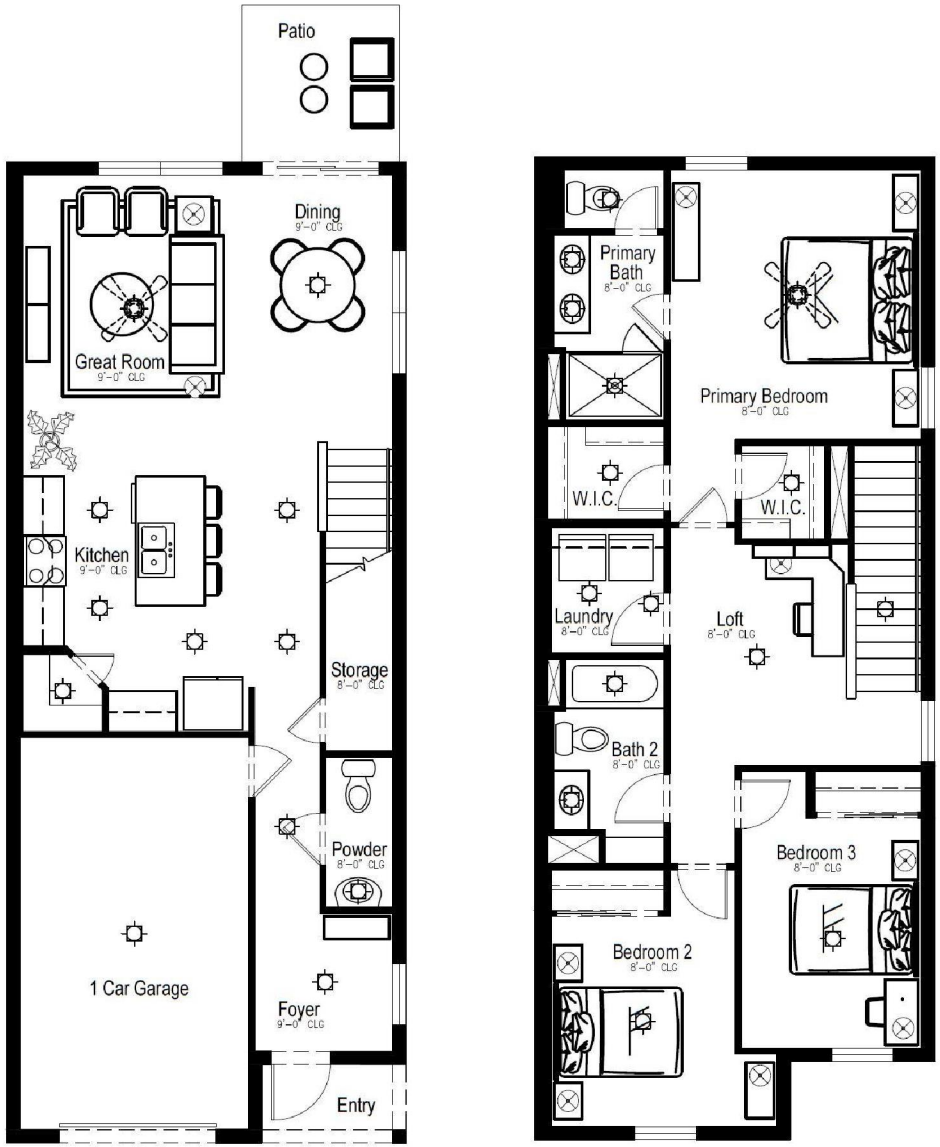

INTERMARK
DESIGN GROUP

T163: FONTANA
FLOOR PLANS

LiVE.NOW.
MOVE SOONER. LIVE BETTER. WHY WAIT?



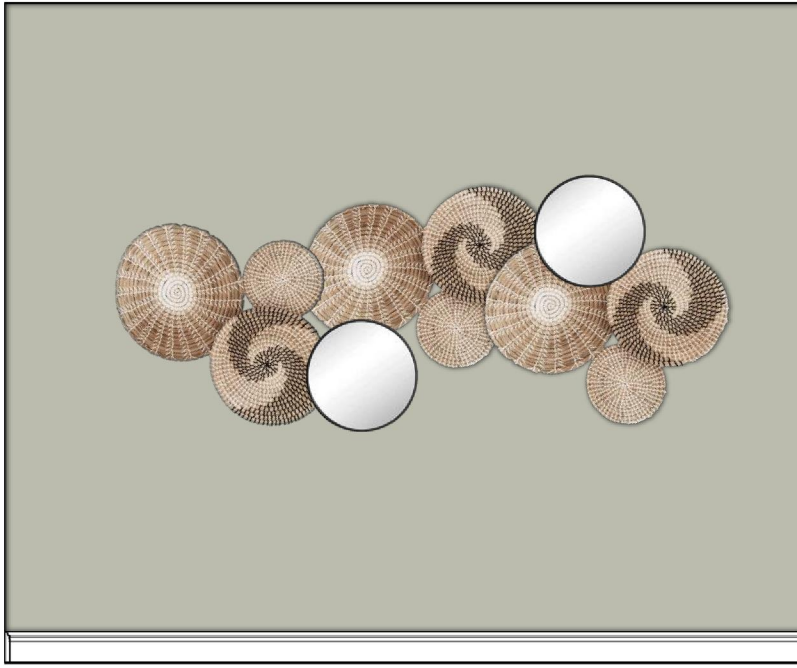









INTERMARK
DESIGN GROUP

T163: FONTANA
FOYER

LiVE.NOW.
MOVE SOONER. LIVE BETTER. WHY WAIT?



INTERMARK
DESIGN GROUP

T163: FONTANA
GREAT ROOM

LiVE.NOW.
MOVE SOONER. LIVE BETTER. WHY WAIT?



45” DIA







INTERMARK
DESIGN GROUP

T163: FONTANA
DINING

LiVE.NOW.
MOVE SOONER. LIVE BETTER. WHY WAIT?



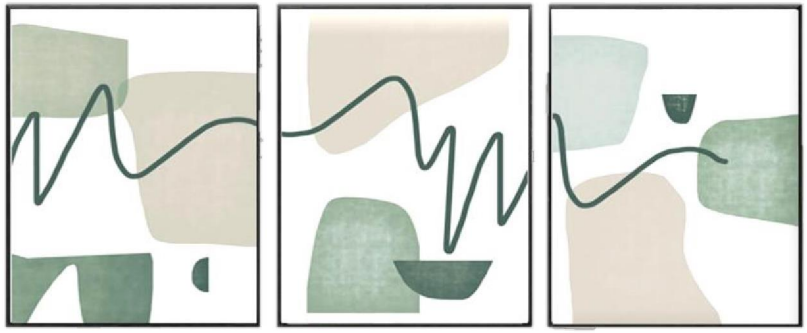





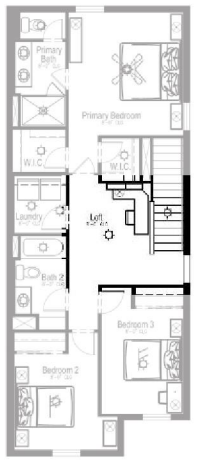

INTERMARK
DESIGN GROUP

T163: FONTANA
LOFT

LiVE.NOW.
MOVE SOONER. LIVE BETTER. WHY WAIT?



KING







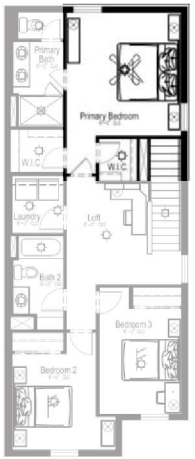







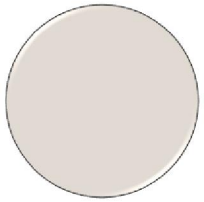

INTERMARK
DESIGN GROUP

T163: FONTANA
PRIMARY BEDROOM

LiVE.NOW.
MOVE SOONER. LIVE BETTER. WHY WAIT?



FULL









INTERMARK
DESIGN GROUP

T163: FONTANA
BEDROOM TWO

LiVE.NOW.
MOVE SOONER. LIVE BETTER. WHY WAIT?







FULL



INTERMARK
DESIGN GROUP

T163: FONTANA
BEDROOM THREE

LiVE.NOW.
MOVE SOONER. LIVE BETTER. WHY WAIT?

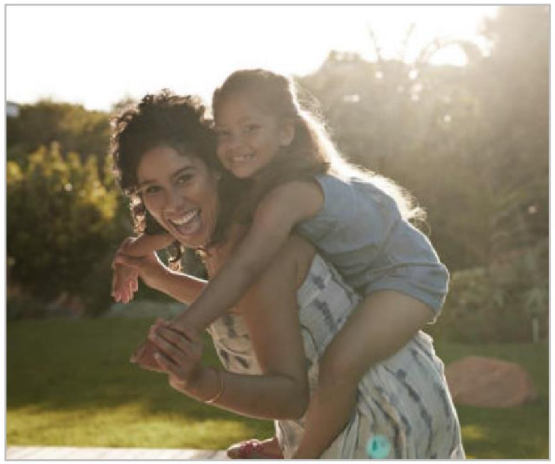





INTERMARK
DESIGN GROUP

T163: FONTANA
PATIO

LiVE.NOW.
MOVE SOONER. LIVE BETTER. WHY WAIT?

Village of Palm Springs
Land Development Department
Unified Development Application

226 Cypress Lane
Palm Springs, FL 33461
Phone: (561) 965-4016
Fax: (561) 439-4132
http://www.vpsfl.org

Prior to the submission of this application, the applicant must have a pre-application meeting with Land Development staff to review the proposed project submittal and processing requirements.

Pre Application Meeting Date: September 15, 2020

Indicate the type of application you are applying for:

- ☐ Comprehensive Plan Amendment (text)
- ☐ Future Land Use Map Amendment*
- ☐ Rezoning *
- ☐ LDR / Zoning Change (text)
- ☐ Plat (Preliminary)
- ☐ Master Sign Plan
- ☐ Temporary License Agreement
- ■ Temporary Use Permit
- ☐ Abandonment
- ☐ Appeal
- ☐ Utility /Civil Plan
- ☐ Administrative Amendment
- ☐ Site Plan (Minor / Major / PD)*
- ☐ Site Plan Amendment (Minor/Major)*
- ☐ Special Exception*
- ☐ Development Order Amendment*
- ☐ Variance (District Standard)*
- ☐ Variance (Sign)
- ☐ Variance (Hours of Operation)*
- ☐ Administrative Variance
- ☐ Deed Restriction / Unity of Title
- ☐ Other _____

INSTRUCTIONS:

1. All questions must be completed on this application. If not applicable, mark ***N/A***.
2. Include all submittal requirements / attachments with this application.
3. All applicable fees are due when the application is submitted (Fees adjusted annually). Advertising, postage, and cost recovery, including professional fees incurred by the Village, will be billed to the Applicant.
4. Include mailing labels/stamped envelopes of all property owners within a 300 feet radius of affected site with signed affidavit (Applications types marked with *).
5. All plans must be submitted no later than 4:00 p.m. 45 days prior to a Land Development Board hearing (see schedule).
6. The applicant is responsible for addressing staff review comments in a timely manner. Any application which remains inactive for over 6 months will be removed from staff review. A new, updated, application will be required with applicable fees.
7. Applicants presenting demonstration boards or architectural renderings to the Village Council must have an electronic copy (PDF) of each board submitted to Land Development Department no later than the Wednesday preceding the meeting. Note: Representations made at the hearing, verbally or graphically, become part of the record.

Staff Use Only

Application Numbers: _____

Date Submitted: _____ **# Posted Signs Required:** _____

SECTION 1-PROJECT INFORMATION:

Project Name: Fontana Townhomes

Project Address: 4090 Coconut Road & 4063 Davis Road

Location of Property: The subject property is located approximately 0.06 mile(s) N, (S), E, W (circle one) from the intersection of Lake Worth Road & Davis Road, on the N, S, E, (W) (circle one) side of Davis Road (street).

Shopping Center / Office Building: N/A

Acreage of Property: 4.73 AC Building Square Feet: Vacant

Density or FAR: 12.5 DU/AC Plat Name: (PL Book 133/PG 15) Fontana Townhomes

PCN Number(s): 70-43-44-30-30-012-0020; 7043-44-30-018-0010; 70-43-44-30-30-000- 0010 to 0070.

Dimensions of Property: Please refer to sketch (Exhibit B) of the Temporary Use Permit Agreement.

Legal Description: (or attach separate sheet)

Please refer to attached Legal Description of the entire property.

Property History, if applicable: Describe previous applications on property (Approved Variances, Special Exception, Site Plan, etc...) Include previous application numbers and any conditions of approval.

Application #	Request	Action	Resolution / Ordinance #	Approval Date
PBC Annexation ID (2018-70-005)	Interlocal Agreement with Palm Beach County for Annexation of Enclave	Approved	Res. 2017-49	10/22/2019
PBC Annexation ID (2018-70-004)	Voluntary Annexation Petition	Approved	Ord. 2017-35	12/21/2017
SPR21-02	Small Scale FLU Amend Rezoning Planned Development Site Plan	Approved	Res. 2021-03	05/03/21
	Preliminary Plat	Approved	Res. 2021-19	07/29/21
	Final Plat	Approved	Res. 2022-03	01/13/22

SECTION 2 - APPLICANT / OWNER / AGENT INFORMATION

Owner's Name: Meritage Homes of Florida, Inc.

Owner's Address: 1400 Centrepark Blvd., Suite 1000, West Palm Beach, FL 33401

Owner's Email Address: maria.bolivar@meritage homes.com

Owner's Phone: 561-706-3747 Owner's Fax: _____

Applicant, if different than Owner: _____

Agent: _____

Contact Person: _____

Agent's Address: _____

Agent's Email Address: _____

Agent's Phone: _____ Agent's Fax: _____

All correspondence will be sent directly to agent unless otherwise instructed.

SECTION 3- LAND USE AND ZONING INFORMATION:

EXISTING	PROPOSED
Zoning: _____	Zoning: RM
Land Use: Urban Infill (PBC)	Land Use: High Density Residential
Use: Vacant	Use: Townhomes
Plat: PB Farms Company Plat No. 7/ Unplatted	Plat: Fontana Townhomes

ADJACENT LAND USE / ZONING / USE(S)

North: NORTHEAST: FLU - Urban Infill (PBC) | Zoning - Urban Infill (PBC) | Use - Trailer Homes
NORTHWEST: FLU - Commercial | Zoning - CG | Use - Medical Office

South: FLU - Medium Residential (PBC) | Zoning - RM (PBC) | Use - Single-Family Residential

East: FLU - Commercial | Zoning - CG | Use - Drive-in Movie Theater

West: FLU - Medium Residential (PBC) | Zoning - PO (PBC) | Use - Governmental Center

SECTION 4 - DESCRIPTION OF PROJECT (attach additional pages if necessary)
Including compliance with zoning standards and supplemental regulations

Meritage Homes of Florida, Inc., is requesting a temporary use permit to allow a temporary model/sales center located on the 4.73-acre parcel that is currently being developed as the Fontana Townhomes residential project, located at 3674 San Bernardino Way.

In an effort to begin the sales process, the applicant is requesting that a 1,915 SF townhome be utilized as a model/sales center for the 59 fee-simple townhouse community that is currently under construction. The proposed location of the model/sales center is Lot/Unit 1 (Building 1) with the temporary parking located in front of Units 1 to 7 (Building 1), on the previously approved site plan (Resolution 2021-03 - May 13, 2021 and final plat (Resolution 2022-04 - January 13, 2022).

SECTION 5- PROJECT AUTHORIZATION

OWNER CERTIFICATION

(If more than one owner, attached executed Certifications for each)

This is to certify that I am the owner of the property described in this application and that all information supplied herein is true and correct to the best of my knowledge. The undersigned hereby petitions the Village of Palm Springs Staff, Planning, Building & Zoning Board, and the Village Council to call Public Hearings upon due Public Notice in accordance with the Rules, Regulations, and Laws as promulgated by the Village of Palm Springs. The cost of which petition and notice and other costs as promulgated by rule is hereby assumed by the undersigned.

Signature of Owner 04/13/22 Date

STATE OF Florida, COUNTY OF Palm Beach

The foregoing instrument was acknowledged before me by means of ☒ physical presence or ☐ online notarization, this 13 day of April, 2022 by Justin Cook, who is personally known to me or who has produced _____ (type of identification) as identification and who did (did not) take an oath.

Signature of person taking acknowledgement _____

Name of officer taking acknowledgement--typed, printed or stamped Ligia Elena Bido

Title or rank_____ Serial number_____

LIGIA ELENA BIDO
Notary Public - State of Florida
Commission # HH 29586
My Comm. Expires Aug 6, 2024
Bonded through National Notary Assn.

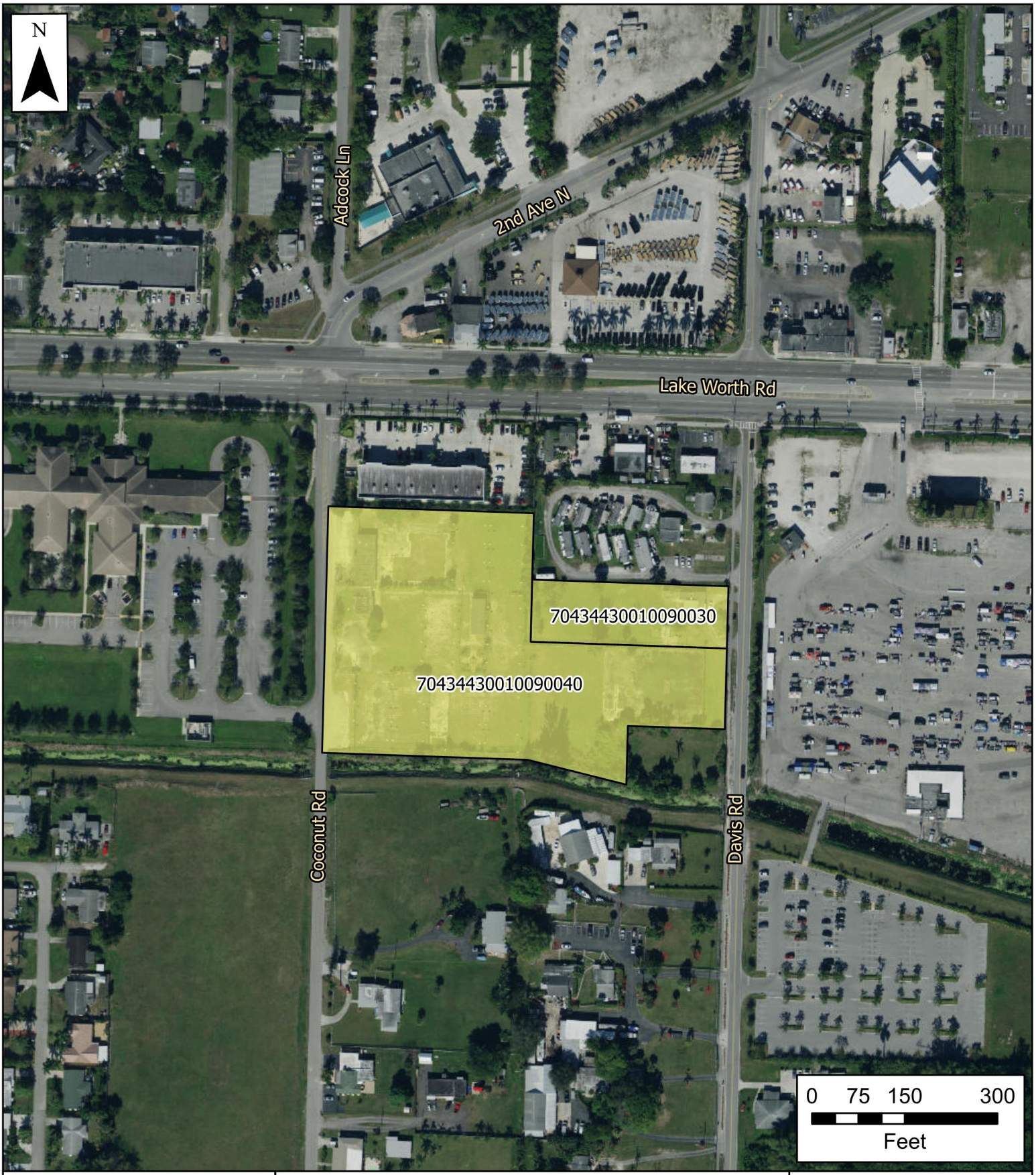

Village of Palm Springs

Fontana Townhomes

Property Boundary

The Data is provided "as is" without warranty or any representation of accuracy, timeliness or completeness. The burden for determining accuracy, completeness, timeliness, merchantability and fitness for or the appropriateness for use rests solely on the requester. The Village of Palm Springs make no warranties, express or implied, as to the use of the licensed Data. There are no implied warranties of merchantability or fitness for a particular purpose. The requester acknowledges and accepts the limitations of the Data, including the fact that the Data is dynamic and is in a constant state of maintenance, correction and update

Data Source: Property boundary provided by Palm Beach County, World Imagery Basemap provided by ESRI Online Services.

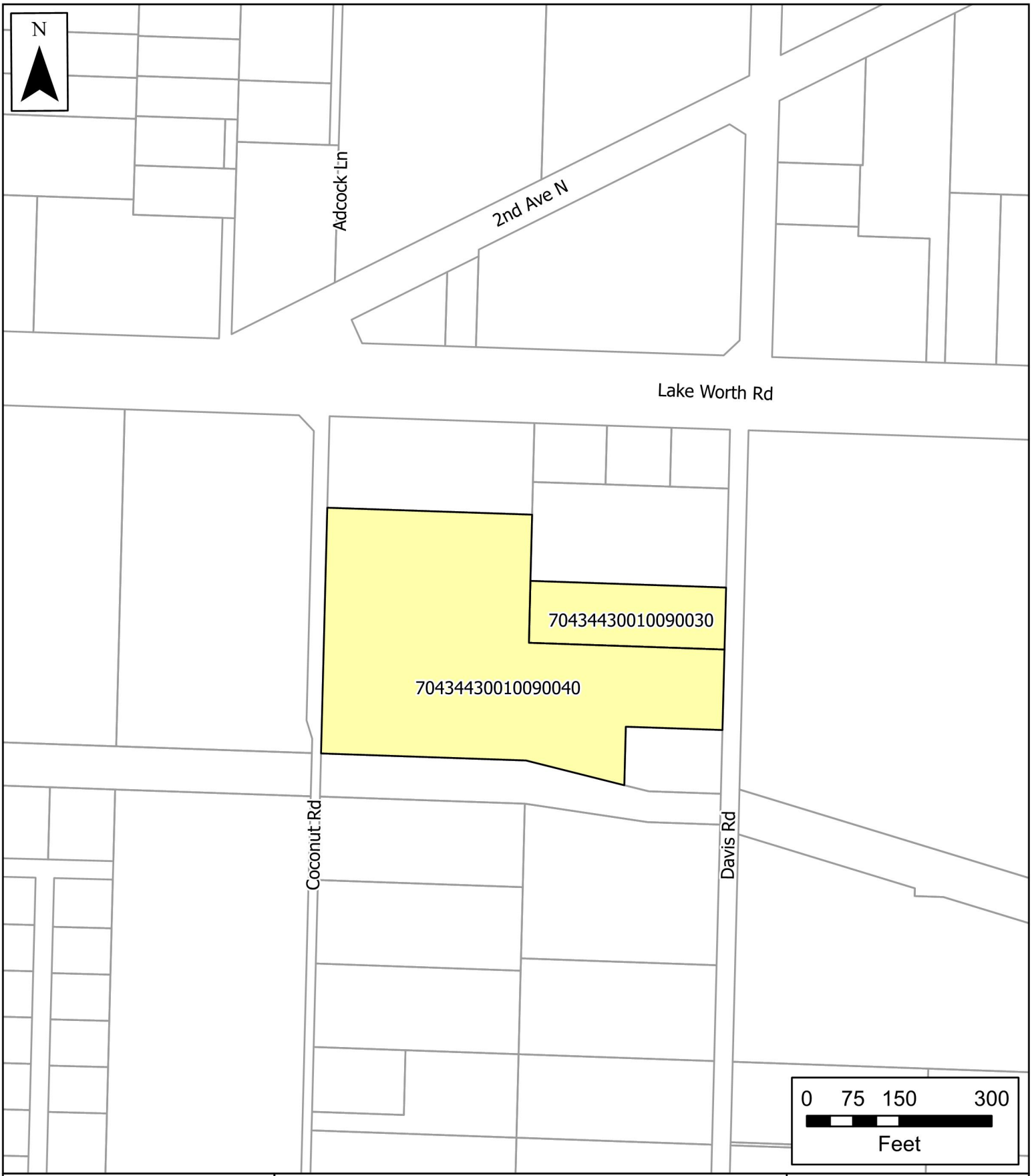

Village of Palm Springs

Fontana Townhomes

Parcels

Property Boundary

The Data is provided "as is" without warranty or any representation of accuracy, timeliness or completeness. The burden for determining accuracy, completeness, timeliness, merchantability and fitness for or the appropriateness for use rests solely on the requester. The Village of Palm Springs make no warranties, express or implied, as to the use of the licensed Data. There are no implied warranties of merchantability or fitness for a particular purpose. The requester acknowledges and accepts the limitations of the Data, including the fact that the Data is dynamic and is in a constant state of maintenance, correction and update

Data Source: Parcels provided by Palm Beach County

Village of Palm Springs

Executive Brief

AGENDA DATE: June 9, 2022

DEPARTMENT: Planning, Zoning & Building

ITEM #12: Approve Property Improvement Program (PIP) Matching Grant Awards - 232 Tam O Shanter Drive, 651 Springdale Circle, 652 Springdale Circle, and 644 Springdale Circle

SUMMARY: The Village's Property Improvement Program (PIP) Committee is recommending approval of grant awards for four (4) property owners who have completed an improvement project to their property and filed the necessary documentation to receive matching grant funding under this program:

- Owner/Resident: Carmen M Fierro
- Address: 194 Springdale Circle
- Project: Replace mansard roof with Davinci Bellaforte
- Eligible (Project) Cost(s): $7,918.50
- Matching Grant Award: $3,959.25

- Owner/Resident: Brian Brown
- Address: 633 Springdale Circle
- Project: Replaced mansard roof with Davinci Bellaforte
- Eligible (Project) Cost(s): $8,500.00
- Matching Grant Award: $4,250.00

- Owner/Resident: Jessica Saenz
- Address: 460 San Fernando Drive
- Project: Replaced driveway with concrete
- Eligible (Project) Cost(s): $10,000.00
- Matching Grant Award: $5,000.00

- Owner/Resident: Belal M Mahmood
- Address: 731 Springdale Circle
- Project: Replaced mansard roof with Davinci Bellaforte
- Eligible (Project) Cost(s): $8,250.00
- Matching Grant Award: $4,125.00

The PIP Selection Committee met on October 29, 2021, and on February 4, 2022, and recommended approval of the grant awards (up to 50% of $5,000). If approved by the Village Council, the awardees will be mailed their checks and may be acknowledged at a future Village Council meeting.

FISCAL IMPACT:

Funding to support the proposed awards is available within the FY22 Budget - General Fund.

ATTACHMENTS:

1. Property Improvement Grant agreement - 194 Springdale Circle
2. 194 Springdale Circle - Before and After Photos
3. Property Improvement Grant Agreement - 633 Springdale Circle
4. 633 Springdale Circle - Before and After Photos
5. Property Improvement Grant Agreement - 460 San Fernando Drive
6. 460 San Fernando Drive - Before and After Photos
7. Property Improvement Gant Agreement - 731 Springdale Circle
8. 731 Springdale Circle - Before and After Photos

Village of Palm Springs

PROPERTY IMPROVEMENT GRANT AGREEMENT

THIS AGREEMENT is entered into this 29th day of October, 2021, by and between the VILLAGE OF PALM SPRINGS and Carmen M Fierro (Applicant).

WHEREAS, the Applicant has made application for a grant with the Village of Palm Springs under the Property Improvement Program for real property located at 194 Springdale Circle; and

WHEREAS, the Village of Palm Springs has approved said application.

IT IS HEREBY AGREED AS FOLLOWS:

1) Applicant agrees to rehabilitate the mansard roof with Davinci Bellaforte synthetic shakes or other property elements consistent with the application submitted to the Village, which is attached to the Agreement as Exhibit "A".
2) In consideration of same and upon satisfactory completion and submittal of appropriate receipts, as determined by the Village Land Development Director in his/her sole discretion, the Village will reimburse Applicant fifty percent (50%) of the total (eligible) project costs, in an amount not to exceed $3,959.25. **In no event shall the Village's reimbursement costs exceed $5,000.00.**
3) Applicant, its successors or assigns, agrees to complete all work, as described on Exhibit "A", and obtain a Certificate of Occupancy or other applicable document that shows 100% completion of the work within one year from the execution of this Agreement, as set forth above.
4) Applicant, its successors or assigns, agrees to maintain the improvements for a period of five (5) years from completion. Should applicant, its successors or assigns, fail to maintain said improvements for a period of five years, applicant, its successors or assigns, shall be obligated to reimburse the Village the full amount of grant funding contributed by the Village under paragraph 2 of this Agreement.
5) This agreement shall be governed by the Laws of the State of Florida and venue shall be in Palm Beach County.

IN WITNESS WHEREOF, the parties have executed this agreement on the date first stated above.

APPLICANT

BY: _____

Print Name: CARMEN FIERRO

VILLAGE OF PALM SPRINGS

BY: _____

Kim Glas-Castro, Assistant Village Manager

STATE OF FLORIDA
COUNTY OF PALM BEACH

The foregoing instrument was acknowledged before me by means of ☑ physical presence or ☐ online notarization, this 8th day of November, 2021 by Carmen Fierro who is personally know to me, or who has produced FL as identification.

Laura M Buzzetta
Notary Public

LAURA M BUZZETTA
Notary Public - State of Florida
Commission # GG 974325
My Comm. Expires Mar 30, 2024
Bonded through National Notary Assn.

My Commission Expires



BEFORE



AFTER

Village of Palm Springs

PROPERTY IMPROVEMENT GRANT AGREEMENT

THIS AGREEMENT is entered into this 29th day of October, 2021, by and between the VILLAGE OF PALM SPRINGS and Brian Brown (Applicant).

WHEREAS, the Applicant has made application for a grant with the Village of Palm Springs under the Property Improvement Program for real property located at 633 Springdale Circle; and

WHEREAS, the Village of Palm Springs has approved said application.

IT IS HEREBY AGREED AS FOLLOWS:

1) Applicant agrees to rehabilitate the mansard roof with Davinci Bellaforte synthetic shakes and flat roof or other property elements consistent with the application submitted to the Village, which is attached to the Agreement as Exhibit "A".
2) In consideration of same and upon satisfactory completion and submittal of appropriate receipts, as determined by the Village Land Development Director in his/her sole discretion, the Village will reimburse Applicant fifty percent (50%) of the total (eligible) project costs, in an amount not to exceed $4,250.00. **In no event shall the Village's reimbursement costs exceed $5,000.00.**
3) Applicant, its successors or assigns, agrees to complete all work, as described on Exhibit "A", and obtain a Certificate of Occupancy or other applicable document that shows 100% completion of the work within one year from the execution of this Agreement, as set forth above.
4) Applicant, its successors or assigns, agrees to maintain the improvements for a period of five (5) years from completion. Should applicant, its successors or assigns, fail to maintain said improvements for a period of five years, applicant, its successors or assigns, shall be obligated to reimburse the Village the full amount of grant funding contributed by the Village under paragraph 2 of this Agreement.
5) This agreement shall be governed by the Laws of the State of Florida and venue shall be in Palm Beach County.

IN WITNESS WHEREOF, the parties have executed this agreement on the date first stated above.

APPLICANT

BY: _____

Print Name: Brian Brown

VILLAGE OF PALM SPRINGS

BY: _____

Kim Glas-Castro, Assistant Village Manager

STATE OF FLORIDA
COUNTY OF PALM BEACH

The foregoing instrument was acknowledged before me by means of [X] physical presence or [ ] online notarization, this 9th day of November, 2021 by Brian Edward Brown who is personally know to me, or who has produced FLDL. as identification.

_____ _____

Notary Public My Commission Expires

Notary Public State of Florida
Ana M Gari-Cadahia
My Commission HH 154714
Expires 07/16/2025



BEFORE



AFTER

Village of Palm Springs

PROPERTY IMPROVEMENT GRANT AGREEMENT

THIS AGREEMENT is entered into this 29th day of October, 2021, by and between the VILLAGE OF PALM SPRINGS and Jessica Saenz (Applicant).

WHEREAS, the Applicant has made application for a grant with the Village of Palm Springs under the Property Improvement Program for real property located at 460 San Fernando Drive; and

WHEREAS, the Village of Palm Springs has approved said application.

IT IS HEREBY AGREED AS FOLLOWS:

1) Applicant agrees to rehabilitate the concrete driveway with new concrete or other property elements consistent with the application submitted to the Village, which is attached to the Agreement as Exhibit "A".
2) In consideration of same and upon satisfactory completion and submittal of appropriate receipts, as determined by the Village Land Development Director in his/her sole discretion, the Village will reimburse Applicant fifty percent (50%) of the total (eligible) project costs, in an amount not to exceed $5,000.00. **In no event shall the Village's reimbursement costs exceed $5,000.00.**
3) Applicant, its successors or assigns, agrees to complete all work, as described on Exhibit "A", and obtain a Certificate of Occupancy or other applicable document that shows 100% completion of the work within one year from the execution of this Agreement, as set forth above.
4) Applicant, its successors or assigns, agrees to maintain the improvements for a period of five (5) years from completion. Should applicant, its successors or assigns, fail to maintain said improvements for a period of five years, applicant, its successors or assigns, shall be obligated to reimburse the Village the full amount of grant funding contributed by the Village under paragraph 2 of this Agreement.
5) This agreement shall be governed by the Laws of the State of Florida and venue shall be in Palm Beach County.

IN WITNESS WHEREOF, the parties have executed this agreement on the date first stated above.

APPLICANT

BY: _____

Print Name: Jessica Saenz

VILLAGE OF PALM SPRINGS

BY: _____

Kim Glas-Castro, Assistant Village Manager

STATE OF FLORIDA
COUNTY OF PALM BEACH

The foregoing instrument was acknowledged before me by means of ☑ physical presence or ☐ online notarization, this 8 day of November, 2021 by Jessica Saenz who is personally know to me, or who has produced FLDL as identification.

Laura Buzzetta
Notary Public

My Commission Expires

LAURA M BUZZETTA
Notary Public - State of Florida
Commission # GG 974325
My Comm. Expires Mar 30, 2024
Bonded through National Notary Assn.



BEFORE



AFTER

Village of Palm Springs

PROPERTY IMPROVEMENT GRANT AGREEMENT

THIS AGREEMENT is entered into this 16th day of March, 2022, by and between the VILLAGE OF PALM SPRINGS and Belal M Mahmood (Applicant).

WHEREAS, the Applicant has made application for a grant with the Village of Palm Springs under the Property Improvement Program for real property located at 731 Springdale Circle; and

WHEREAS, the Village of Palm Springs has approved said application.

IT IS HEREBY AGREED AS FOLLOWS:

1) Applicant agrees to rehabilitate the mansard roof or other property elements consistent with the application submitted to the Village, which is attached to the Agreement as Exhibit "A".
2) In consideration of same and upon satisfactory completion and submittal of appropriate receipts, as determined by the Village Land Development Director in his/her sole discretion, the Village will reimburse Applicant fifty percent (50%) of the total (eligible) project costs, in an amount not to exceed $4,125.00. **In no event shall the Village's reimbursement costs exceed $5,000.00.**
3) Applicant, its successors or assigns, agrees to complete all work, as described on Exhibit "A", and obtain a Certificate of Occupancy or other applicable document that shows 100% completion of the work within one year from the execution of this Agreement, as set forth above.
4) Applicant, its successors or assigns, agrees to maintain the improvements for a period of five (5) years from completion. Should applicant, its successors or assigns, fail to maintain said improvements for a period of five years, applicant, its successors or assigns, shall be obligated to reimburse the Village the full amount of grant funding contributed by the Village under paragraph 2 of this Agreement.
5) This agreement shall be governed by the Laws of the State of Florida and venue shall be in Palm Beach County.

IN WITNESS WHEREOF, the parties have executed this agreement on the date first stated above.

APPLICANT

BY: _____

Print Name: Belal Mahmood

VILLAGE OF PALM SPRINGS

BY: _____

Kim Glas-Castro, Assistant Village Manager

STATE OF FLORIDA
COUNTY OF PALM BEACH

The foregoing instrument was acknowledged before me by means of ☑ physical presence or ☐ online notarization, this 16 day of March, 2022 by Belal Mahmood who is personally know to me, or who has produced FLDL as identification.

LAURA M BUZZETTA
Notary Public - State of Florida
Commission # GG 974325
My Comm. Expires Mar 30, 2024
Bonded through National Notary Assn.

_____ _____

Notary Public My Commission Expires



BEFORE



AFTER

Office of the Mayor

Village of Palm Springs, Florida

Proclamation

WHEREAS, in the United States, more than 1 million people are living with HIV, and every 15 minutes a new HIV transmission occurs resulting in more than 34,000 annual new HIV diagnoses; and

WHEREAS, in Florida more than 117,400 people are living with HIV, and an estimated 10 new transmissions occur daily, and 1-in-7 persons with HIV don't know that they have it; and

WHEREAS, in Palm Beach County more than 8,200 people, or 1-in-180 residents, are living with HIV; and

WHEREAS, significant new and highly advanced treatments deliver hope and enhance the quality of life for those who are affected, these considerable advancements can only help individuals if they know their HIV status and are linked into lifesaving medical care; and

WHEREAS, each year on June 27, we observe National HIV Testing Day to raise awareness about the importance of HIV testing and early diagnosis of HIV and linkage to medical care, and to inspire the nation to achieve its shared vision of zero new HIV infections, zero discrimination and zero AIDS-related deaths; and

WHEREAS, the 95-95-95 ambitious global plan to help end the AIDS epidemic has set its targets for 2030, that 95% of all persons with HIV will know their HIV status, 95% of all people with diagnosed HIV will receive sustained ART, and 95% of all people receiving ART will have viral suppression; and

WHEREAS, this year marks the 28th annual observance of National HIV Testing Day on June 27, and the Palm Beach County HIV Community Prevention Partnership and the Palm Beach County HIV CARE Council, through its partners are working together to provide HIV testing throughout Palm Beach County during the week surrounding National HIV Testing Day, June 24 – 30, 2022; and.

NOW, THEREFORE, I, BEV SMITH, MAYOR OF THE VILLAGE OF PALM SPRINGS, Florida, on behalf of the Council, do hereby proclaim June 27, 2022, as:

NATIONAL HIV TESTING DAY

and urge all residents of the city of Palm Springs to take the HIV test to know your status and to take part in other activities and observances designed to increase awareness and understanding of HIV.

In witness whereof I have hereunto set my hand

and caused the seal of this city to be affixed

Mayor Bev Smith

Date June 9, 2022

VILLAGE OF PALM SPRINGS SEAL 1957 FLORIDA

Office of the Mayor

Village of Palm Springs, Florida

Proclamation

WHEREAS, the Florida League of Cities was formed in June 1922 and serves as the voice for Florida's more than 400 cities, towns, and villages; and

WHEREAS, for a century, the Florida League of Cities mission is to serve the needs of Florida's cities and promote local self-government, advocating for local decision making in order for cities to serve the unique needs of their citizens; and

WHEREAS, the Florida League of Cities provides Florida's cities with the tailored advocacy tools, training, and resources they need to succeed, to include the Institute for Elected Municipal Officials specific training on municipal governance; and

WHEREAS, the Florida League of Cities also serves as an administrator for the Florida Municipal Insurance Trust, offers innovative financial solutions to Florida's local governments, and provides contractual support services to several statewide municipal and professional associations; and

WHEREAS, the Florida League of Cities represents municipal government interests at the state and federal levels with a dedicated team of legislative advocates that help to ensure local voices are making local choices within their cities.

NOW, THEREFORE, I BEV SMITH, MAYOR OF THE VILLAGE OF PALM SPRING, on behalf of the Village do hereby wish to commemorate and pay special tribute The Florida League of Cities on the occasion of their 100th Anniversary.

"THE FLORIDA LEAGUE OF CITIES 100TH ANNIVERSARY"

VILLAGE OF PALM SPRINGS SEAL 1957 FLORIDA

In witness whereof I have herunto set my hand and caused the seal of this city to be affixed

Mayor Bev Smith

Date June 9, 2022

Office of the Mayor

Village of Palm Springs, Florida

Proclamation

WHEREAS, the Emancipation Proclamation was formally issued on January 1, 1863, declaring that enslaved Africans in the Confederate States of America were to be freed; and

WHEREAS, news of the issuance of the Emancipation Proclamation was not immediately delivered to the most remote areas of the Confederate States of America; and

WHEREAS, news of the abolition of the enslavement of African Americans was not delivered to all the Confederate States until after the conclusion of the American Civil War; and

WHEREAS, all of the Confederate States received news of the end of enslavement of African people on June 19, 1865; and

WHEREAS, June 19th – JUNETEENTH a linguistic blend of the words June and nineteenth, was adopted to commemorate this historical and pivotal date in American history; and

WHEREAS, beginning on January 1, 1980, several states and municipal governments in the United States have declared June 19th – JUNETEENTH a legal holiday; and

WHEREAS, June 19th – JUNETEENTH, is celebrated nationally and internationally to recognize the end of the enslavement and to celebrate the culture and achievements of African Americans in the United States; and

WHEREAS, today, millions of Americans of all races, creeds, religious and ethnic backgrounds celebrate Juneteenth, which not only celebrates freedom, but also acknowledges the achievements of African Americans.

NOW, THEREFORE, I BEV SMITH, Mayor of the Village of Palm Spring, do hereby proclaim **"Juneteenth"** on June 19, 2022; and urge the residents of Palm Springs to participate in events that celebrate freedom for all.

"JUNETEENTH"

VILLAGE OF PALM SPRINGS SEAL 1957 FLORIDA

In witness whereof I have herunto set my hand and caused the seal of this city to be affixed

Mayor Bev Smith

Date June 9, 2022

Village of Palm Springs

Executive Brief

AGENDA DATE: June 9, 2022

DEPARTMENT: Finance

ITEM #16: Resolution No. 2022-23 - Approval of Proposed Garbage Non-ad Valorem Rates for FY2023 - Effective October 1, 2022

SUMMARY: In 2008, the Village adopted Resolution No. 2008-61 to establish non-ad valorem rates for garbage based on the cost of collection and disposal at that time. The Village's costs have continued to increase annually because of a cost of living increase and, most recently, the new contract with Waste Pro includes a 9% increase effective April 2022 and another 9% effective April 2023.

As a result, the Village calculated the rates needed to cover the increase through FY 2023 at a 100% collection.

FISCAL IMPACT:

The annual rates are:

	CURRENT RATE	PROPOSED RATE
Single Home	$151.20	$201.00
Multi-Family	$94.50	$125.50
MHP	$94.50	$125.50

An analysis of the revenue needed and the rates required to cover costs at 100% collection is attached. The proposed increase is 33%.

ATTACHMENTS:

1. Proposed Resolution No. 2022-23 Amend Garbage Non Ad Valorem Assessment Rates FY-2023
2. Garbage Revenue Analysis
3. Garbage Rates of Other Municipalities

RESOLUTION NO. 2022-23

A RESOLUTION OF THE VILLAGE COUNCIL OF THE VILLAGE OF PALM SPRINGS, FLORIDA, TO AMEND THE NON-AD VALOREM ASSESSMENT FOR GARBAGE, TRASH AND RECYCLABLE COLLECTION SERVICES AND RELATED SERVICES ON THE PALM BEACH COUNTY TAX NOTICES; AND PROVIDING AN EFFECTIVE DATE.

WHEREAS, Non Ad-Valorem are adopted by Resolution; and

WHEREAS, fees were last amended in 2015, by Resolution No. 2015-67; and

WHEREAS, the Village's costs have continued to increase each year because of an increase in the cost of living creating a shortfall in non-ad-valorem revenues; and

WHEREAS, the Village propose an increase of 9% in April 2022, and another increase in April 2023 of 9%.

NOW THEREFORE, BE IT RESOLVED BY THE VILLAGE COUNCIL OF THE VILLAGE OF PALM SPRINGS, FLORIDA, as follows**:**

Section 1. The foregoing recitals are hereby affirmed and ratified as being true and correct.

Section 2. The following Non-Ad Valorem Assessment rates per computed parcels for the Village of Palm Springs for purposes of TRIM for the Fiscal Year 2022/202 are hereby adopted as follows:

Single Family Homes	~~$151.20~~	$201.00
Multi-Family Homes	~~$ 94.50~~	$125.50
Mobile Homes	~~$ 94.50~~	$125.50

Section 3. A Public Hearing will be held on July 21, 2022 to adopt the final rates.

Council Member _____ offered the foregoing resolution. Council Member _____ seconded the motion, and upon being put to a vote, the vote was as follows:

	Aye	Nay	Absent
BEV SMITH, MAYOR	☐	☐	☐
DOUG GUNTHER, VICE MAYOR	☐	☐	☐
JONI BRINKMAN, MAYOR PRO TEM	☐	☐	☐
PATTI WALLER, COUNCIL MEMBER	☐	☐	☐
GARY READY, COUNCIL MEMBER	☐	☐	☐

The Mayor thereupon declared this Resolution duly passed and adopted this _____ day of June 2022.

VILLAGE OF PALM SPRINGS, FLORIDA

BY: _____
BEV SMITH, MAYOR

ATTEST:

BY: _____
KIMBERLY M. WYNN, VILLAGE CLERK

REVIEWED FOR FORM AND LEGAL SUFFICIENCY

BY: _____
GLEN J. TORCIVIA, VILLAGE ATTORNEY

VILLAGE OF PALM SPRINGS
GARBAGE REVENUE SHORTFALL ESTIMATED

Annual Current Rates		
Single Family	$	151.20
Multi-Family	$	94.50
Mobile Home	$	94.50

2023 Annual Rates	*33% Increase*		Proposed Annual Increase
Single Family	$ 201.00	$	49.80
Multi-Family	$ 125.50	$	31.00
Mobile Home	$ 125.50	$	31.00

Description	Budget FY2022	YTD FY2022	Forecast FY2022	Estimated Budget FY 2023
Garbage Collection Fee -NAV & Utility Bill	1,160,288	1,020,185	1,279,212	1,594,803
Sanitation Expenditure Budget (revised)	1,616,605	579,560	1,453,789	1,584,806
Revenues over(short)	**(456,317)**	**440,625**	**(174,577)**	**9,997**
	-39%	**43%**	**-14%**	**1%**
Franchise Fee (5%) includes commercial	151,000	58,884	176,689	183,240

Sanitation Expenditure Increases:	**FY2022**		**FY2023**	
Waste Pro Rates	***Thur 3/31/22***	***4/1/2022***	***1st 6mo***	***2nd 6mo***
Curbside (SF) - 4,314 ur	$ 14.64	$ 15.96	$ 15.96	$ 17.39
Multi-Family - 5,901 un	$ 8.94	$ 9.75	$ 9.75	$ 10.63
	378,941.76	413,108.64	413,108.64	450,122.76
	316,529.64	345,208.50	345,208.50	376,365.78
	695,471.40	758,317.14	758,317.14	826,488.54
Total Estimated Sanitation Expenditures	**1,453,789**		**1,584,806**	

VILLAGE OF PALM SPRINGS
GARBAGE REVENUE 2022-2023

	2022 Rate	2022 Units	2022 Revenue	2023 Rate	2023 Units	2023 Revenue
MF	$ 94.50	7,247	684,841.50	$ 125.50	7,247	909,498.50
SF	$ 151.20	2,794	422,452.80	$ 201.00	2,794	561,594.00
MH	$ 94.50	188	17,766.00	$ 125.50	188	23,594.00
		10,229	**1,125,060.30**		10,229	**1,494,686.50**
	Avg monthly Util Billing			Est. avg monthly Util Billing		
		$8,100 *12 =	**97,200.00**		$8,343 *12 =	**100,116.00**
		100%	1,222,260.30		100%	1,594,802.50
		96%	1,173,369.89		96%	1,531,010.40

	SF	*MF per unit*	*Hauler*	
Village of Palm Springs	$ 151.20	$ 94.50	WP	*NAV*
City of Greenacres	$ 172.60	$ 115.20	WM	*NAV*
Lake Clarke Shores	$ 200.64	$ 141.12	WM	*NAV*
City of West Palm Beach	$ 211.20	$ 211.20	In-house	*Direct*
City of Boynton Beach	$ 216.00	$ 177.00	In-house	*Direct*
City of Lake Worth Beach	$ 245.14	$ 245.14	In-house	*NAV*
City of Delray Beach	$ 134.16	$ 134.16	In-house	*Direct*

Village of Palm Springs

Staff Report

AGENDA DATE: June 9, 2022

DEPARTMENT: Planning, Zoning & Building

ITEM #17: Ordinance No. 2022-02 - Land Use Amendment (Small-Scale) - Belmont - 1591 Kirk Road - *(Second Reading)(Quasi-Judicial Hearing)*

SUMMARY: Mr. Jerrod Purser, agent for D.R. Horton, Inc. ("Applicant"), is requesting a small-scale land use plan amendment on a 5.07-acre property to facilitate a multi-family (townhome) development project.

The proposed small-scale land use change would be from the existing Palm Springs designation to the new Palm Springs designation. The property is less than 50 acres in size (5.07 acres) and planned for urban (residential) use:

Existing Village Future Land Use	Proposed Village Future Land Use
Other Public Facilities	Medium Density Residential (up to 10 du/ac)

The applicant is requesting that the property be designated with the Village's Medium-Density Residential future land use category (10 du/ac), which would allow up to a maximum intensity of 50 residential dwelling units. The property was annexed into the Village of Palm Springs in 2006 and assigned Village Residential Multiple-Family and Other Public Facilities zoning and future land use designations, respectively.

Note: The subject property is bound to the west and the north by Palm Beach County residential land use.

The applicant is concurrently requesting a site plan approval (SPR22-03) and two (2) waivers for residential planned development (RPD) to construct 42 two-story fee-simple townhomes within seven (7) buildings. The proposed community would have access via Kirk Road, and amenities are expected to include playground equipment, picnic tables under a shade structure, and a trail path.

The applicant is requesting two (2) waivers for the proposed RPD site plan:

1. Relief from Sec. 34-1328 to allow a 20' wide drive aisle rather than the 26' wide required
2. Relief from Sec. 34-766(1) to allow the construction of 42 residential dwelling units within 5.07 acres rather than 8.84 acres.

The proposed site plan with waivers is presented (within this item) for informational purposes only (no action is required at this time). If the proposed small-scale map amendment is approved on the 2nd and final reading, the proposed site plan will be considered by the Village Council under a separate

Resolution.

The staff has identified the focal area of concern related to the project with the present traffic conditions at the northern section of the Kirk Road and Forest Hill Boulevard intersection, primarily because of peak traffic caused by the adjacent middle school. The main issue is the increased vehicular and pedestrian traffic during peak morning and afternoon school traffic. Palm Springs Middle School has an enrollment of 1,636 students, and the school session is from 9:30 a.m. to 4:05 p.m. The peak traffic times for this area range from 8:00 a.m. - 9:00 a.m. and 3:00 p.m. - 4:30 p.m. Kirk Road has hundreds of cars stacked for student drop off and pick up during these times. Hundreds of students cross the adjacent roads at the beginning of school and during dismissal. Officers estimate about 400 students exit the school. Many of them cross the street using the northern crosswalk to go to Dollar General, Cumberland Farms, and Woodhaven Plaza. During peak dismissal, the school staff stops vehicular traffic at the north crosswalk crossing for up to seven minutes, and crossing guards at the corner of Kirk and Forest Hill stop vehicular traffic for multiple twenty-second intervals. In addition, Palm Beach County added a second pedestrian crossing on Kirk Road north of the main intersection on Kirk and Forest Hill to alleviate crowding at the corner crossings. The end of the new crosswalk is too close to the driveway to access Dollar General. As a result, students crossing the street walk directly into traffic that turn left into Kirk since the lack of distance does not allow stacking. We believe the county could have averted this issue if the crosswalk were offset by a few feet further north away from the driveway access.

Note: The Village does not typically place conditions of approval on future land use map changes. The legislative decision as to the appropriateness of the land use, irrespective of potential development plans, is generally made with consideration to compatibility, impact on services, and need for the land use to fulfill village redevelopment and growth objectives.

The proposed request was submitted through the PBC Intergovernmental Plan Amendment Review Committee (IPARC) for intergovernmental review and no comments were received.

Note: IPARC is designated to provide coordination of proposed plan amendments, cooperation between affected local governments and service providers and provides opportunities to resolve potential disputes only within the plan amendment process.

The Planning & Zoning Board considered the requested land use plan amendment during their February 8, 2021 meeting and recommended denial. Board members expressed concerns regarding the number of units suggested, the density, and the amount of traffic generated from the new development.

The Local Planning Agency (LPA) considered this item during their March 10, 2022 meeting and recommended denial.

On March 10, 2022, the project was presented to the Local Planning Agency Board. The applicant requested this item be withdrawn, to revise the site plan and address concerns expressed by Board members.

The applicant has revised the project to propose a maximum intensity of 8.28 residential dwelling units per acre and reduced the number of units from 50 to 42 dwelling units. On May 12, 2022, the Village Council approved on 1st reading the proposed medium density with a maximum intensity of 8.28 residential dwelling units per acre.

The proposed ordinance is being presented for consideration on the 2nd and final reading.

FISCAL IMPACT:

The property land use amendment is not expected to provide a direct fiscal impact on the Village; however, it would facilitate development that will increase the Village's property evaluation. In addition, this project would require various Village services that will result in increased expenditures on the Village.

ATTACHMENTS:

1. Proposed Ordinance No. 2022-02 - Small Scale Land Use Amendment - 1591 Kirk Road - Belmont
2. Exhibit "A" Staff Report & Conditions of Approval
3. Applicant Justification Statement
4. Site Plan
5. Belmont Color Plans
6. Traffic Conditions
7. Warranty Deed
8. Aerial, Location, FLU Maps

ORDINANCE NO. 2022-02
(SMALL SCALE LAND USE AMENDMENT)

AN ORDINANCE OF THE VILLAGE OF PALM SPRINGS, FLORIDA, AMENDING THE COMPREHENSIVE LAND USE PLAN OF THE VILLAGE, PURSUANT TO THE "SMALL SCALE" COMPREHENSIVE LAND USE AMENDMENT LAWS OF THE STATE OF FLORIDA, FOR A 5.07-ACRE PARCEL AND PLANNED FOR "MEDIUM DENSITY RESIDENTIAL" LOCATED AT 1591 KIRK ROAD, AND BEING MORE FULLY DESCRIBED IN EXHIBIT "A" ATTACHED HERETO, FROM A FUTURE LAND USE DESIGNATION OF "OTHER PUBLIC FACILITIES" TO A FUTURE LAND USE DESIGNATION OF "MEDIUM DENSITY RESIDENTIAL"; THE ZONING DESIGNATION WILL REMAIN AS "RESIDENTIAL MULTIPLE- FAMILY (RM)" DISTRICT ON THE VILLAGE OF PALM SPRINGS OFFICIAL ZONING MAP; PROVIDING DIRECTIONS TO THE VILLAGE CLERK; PROVIDING FOR REPEAL OF ALL ORDINANCES IN CONFLICT; PROVIDING FOR SEVERABILITY; AND PROVIDING FOR AN EFFECTIVE DATE.

WHEREAS, the Village has determined the need to amend the land use designation for a parcel less than 50 acres in size (5.07 acres) that is currently a church, and is currently proposed for "medium density residential" use located at 1591 Kirk Road; and

WHEREAS, the Village will initiate the small-scale land use from the existing Village of Palm Springs designations. The subject property is less than 50 acres in size; and

WHEREAS, there is a limitation of ten (10) dwelling units' maximum on the property; and

WHEREAS, the Village has adopted a Comprehensive Plan pursuant to the Local Government Comprehensive Planning and Land Development Regulation Act (the "Act"); and

WHEREAS, the Village Council, sitting as the Village's Local Planning Agency (the "LPA") will consider this item on March 10, 2022, and their recommendation will be provided to the Council prior to consideration; and

WHEREAS, the Village Council has considered the request of Village Staff for small-scale land use amendment; and

WHEREAS, the Village Council has determined that granting the request for land use amendment serves a valid public purpose.

NOW THEREFORE, BE IT ORDAINED BY THE VILLAGE COUNCIL OF THE VILLAGE OF PALM SPRINGS, FLORIDA:

Section 1. Findings. The Village Council finds the above statements are true and correct and serve as a basis for consideration of this ordinance.

Section 2. Future Land Use. The Future Land Use designation in the Village's Comprehensive Land Use Plan for the lands described herein, as more particularly designated in **"Exhibit A"** shall be established as "Medium Density Residential" land use. Until such time as the appeal period expires, (if challenged, the new Future Land Use Designation is not effective until such time as the state land planning agency or the Administration Commission issues a final order of compliance) but not sooner than 31 days following the effective date of this ordinance, all development of said lands shall be subject to the requirement of the existing Village Land Use Plan, Zoning, and Subdivision Regulations.

Section 3. Repeal of Conflicting Ordinances. All Ordinances, Resolutions or parts of Ordinances and Resolutions in conflict herewith are hereby repealed.

Section 4. Severability. If any word, clause, sentence, paragraph, section, or part thereof contained in this Ordinance is declared to be unconstitutional, unenforceable, void, or inoperative by a court of competent jurisdiction, such declaration shall not affect the validity of the remainder of this Ordinance.

Section 5. Effective Date. This Ordinance shall become effective thirty-one (31) days from adoption.

Council Member_____ offered the foregoing Ordinance and moved its adoption. The motion was seconded by Council Member _____and upon being put to a vote, the vote was as follows:

	Aye	Nay	Absent
BEV SMITH, MAYOR	□	□	□
DOUG GUNTHER, VICE MAYOR	□	□	□
JONI BRINKMAN, MAYOR PRO TEM	□	□	□
PATTI WALLER, COUNCIL MEMBER	□	□	□
GARY READY, COUNCIL MEMBER	□	□	□

The Mayor thereupon declared this Ordinance approved and adopted by the Village Council of the Village of Palm Springs, Florida, on second reading, this _____2022.

VILLAGE OF PALM SPRINGS, FLORIDA

BY: _____
BEV SMITH, MAYOR

First Reading: _____

Second Reading:_____

ATTEST:

BY: _____
KIMBERLY M. WYNN, VILLAGE CLERK

REVIEWED FOR LEGAL FORM AND SUFFICIENCY

BY: _____
GLEN J. TORCIVIA, VILLAGE ATTORNEY

PLANNING, ZONING & BUILDING STAFF REPORT

SUBJECT: Small-Scale Future Land Use Amendment and Residential Plan Development Site Plan with Waivers
Belmont – 1591 Kirk Road

Application Summary			
Applicant / Petitioner	D.R. Horton, Inc. (Contract Purchaser) Jerrod Purser; WGI, Inc. (Agent)	**Submittal Date**	4/29/2021
Reference Name	Belmont	**Case Number**	**SPR22-03**
		Parcel Control No.	70-42-44-12-39-000-0020
Location	1591 Kirk Road	**Site Area**	± 5.07 net acres
P&Z B Meeting	Tuesday, February 8, 2022	**Local Planning Agency**	Thursday, March 10, 2022
Council Meeting (after LPA, 1st Reading)	Thursday, May 12, 2022	**Council Meeting (2nd Reading)**	Thursday, June 9, 2022

Requests	
Proposed Use	Small-Scale Future Land Use Amendment to change the land use from Other Public Facilities to Medium Density Residential and Residential Planned Development Site Plan with waivers for the construction of 42 two-story fee-simple townhomes within seven (7) buildings.
Number of Buildings	Seven (7) Buildings (approximately 78,848 S.F. total)
Waivers	1. Requesting a waiver from Sec. 34-1328 to allow a 20' parking drive aisle instead of the 26' parking drive aisle required. 2. Requesting a waiver from Sec. 34-766(1) to allow a minimum lot area of 5.07 acres (220,849 SF) instead of the 8.85 acres (385,500 SF) minimum requirement.

Parking			
Code	**Required**	**Provided**	**Meets Requirement**
Total Parking	**Total of 132 spaces needed** 2.5/ DU + 25% for guest	141 spaces total 42 One-Car Garages, 56 Driveway spaces, 56 guest spaces	Yes

Setbacks			
Code	**Required Minimum**	**Proposed**	**Meets Requirement**
Front Yard	25'	30'	Yes
Rear Yard	20'	20'	Yes
Side Yard	20'	20'	Yes

Site Characteristics			
Existing Use	Church	**Proposed Use**	Townhomes
Existing Zoning	Residential Multiple-Family (RM)	**Proposed Zoning**	Residential Multiple-Family (RM)
Existing Future Land Use	Other Public Facilities	**Proposed Future Land Use**	Medium Density Residential
Proposed Density	8.28 du/acres (Maximum permitted on Medium Density Residential is 10 du/acre)		

Surrounding Existing Land Use, Future Land Use, and Zoning			
Direction	**Existing Use**	**Future Land Use**	**Zoning District**
North	LWDD Canal	Unincorporated PBC	Unincorporated PBC
South	Retail	Commercial	Commercial General (CG)
East	Palm Springs Middle School	Education	Governmental (G)
West	Multi-Family Residences	Unincorporated PBC	Unincorporated PBC

Recommendation

Staff has concerns regarding congestion issues due to high pedestrian traffic during the neighboring school's entry and dismissal. A second pedestrian crossing on Kirk Road was added crossing north of the main intersection on Kirk and Forest Hill to prevent jaywalking and alleviate crowding in the corner crossings. However, the end of the new crosswalk is too close to the driveway access to Dollar General. As a result, students crossing the street walk directly into traffic turning left into Kirk since the lack of distance does not allow stacking.

Village and School District Staff recommends that payment of the monetary contribution requested by Palm Beach County School District, be required prior to permitting. Said funds shall be escrowed by the District and earmarked as a contribution to a future pedestrian-oriented traffic signal, pursuant to Palm Beach County specifications, at the mid-block crossing from Palm Springs Middle School to the west side of Kirk Road.

Additionally, staff recommends designating the right exit lane, from the new community, a turn-right-only lane during school zone hours to reduce traffic conflicts during peak traffic hours (8:00 – 9:00 am and 3:00pm – 4:30 pm)

Even with the concerns outlined in this staff report, Planning, Zoning & Building Staff recommends conditional approval of the new residential medium density planned development site plan, as depicted on the proposed site plan, based on consistency with the Village Comprehensive Plan and compatibility with surrounding uses.

The Planning and Zoning Board considered the application and recommended denial – motion carried 3-2. After the Planning & Zoning Board consideration, the project was revised to reduce the number of units from 50 to 42 dwelling units.

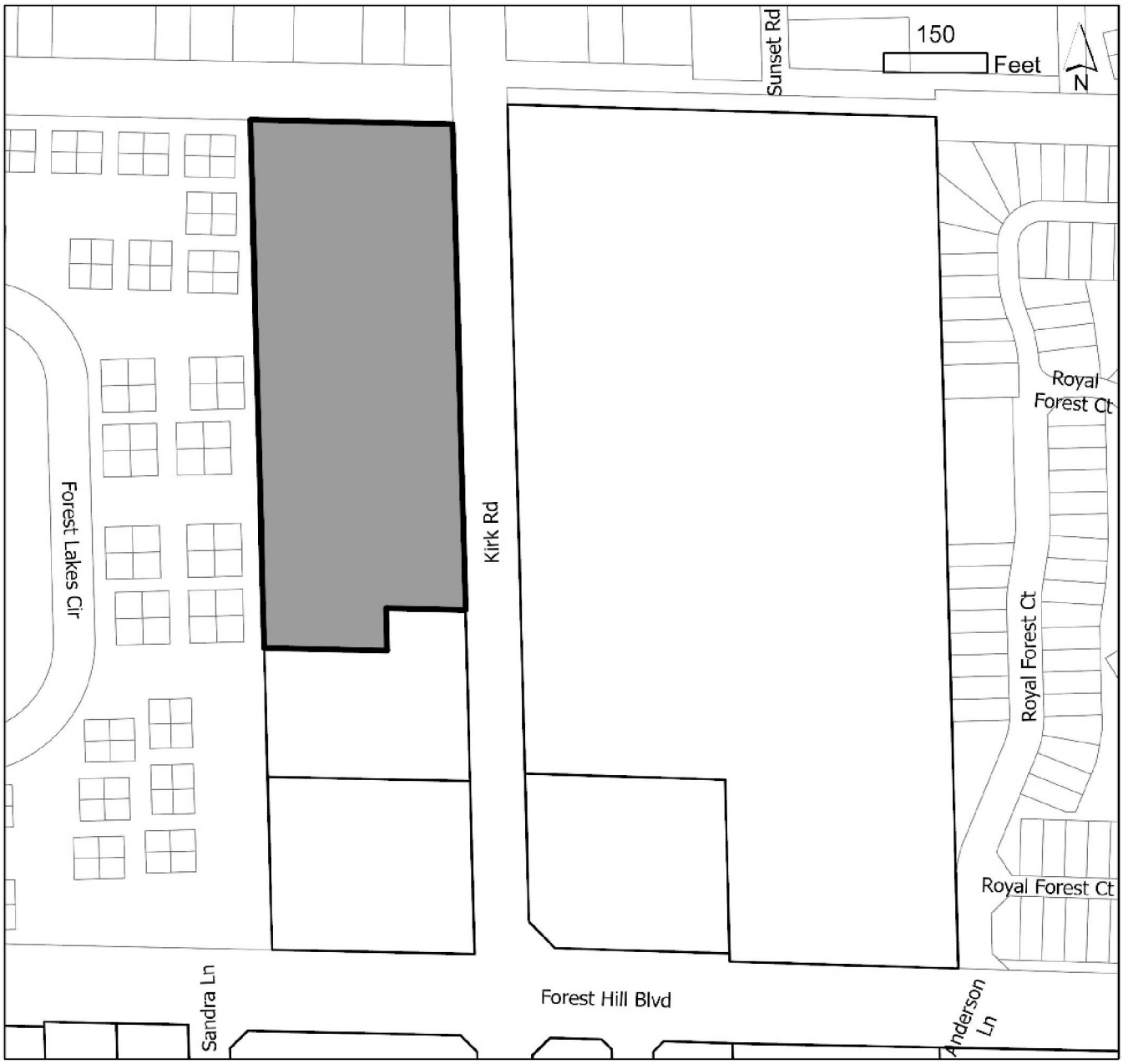

I Site History

- Ordinance 2006-13: Annexation
  The property located at 1591 Kirk Road was annexed into the Village of Palm Springs on April 27, 2006. The property maintained Palm Beach County's Future Land Use Designation of Institutional and Palm Beach County's Zoning Designation of Residential Multi-Family/Medium Density with a Class A Conditional Use.

- Ordinance 2007-26: Future Land Use Map Amendment
  On February 28, 2008, the Village Council adopted the resolution to change the property's Future Land Use designation to Other Public Buildings and Zoning Designation to Residential Multiple Family.

- Ordinance 2014-02: Small Scale Land Use and Zoning
  The 0.77-acre southern vacant portion of the parcel was carved out with a FLU Map Amendment to Commercial and rezoning to Commercial General.

II. Comprehensive Plan Consistency

- The subject property's Future Land Use Designation and Zoning are Other Public Facilities and Residential Multi-Family, respectively. The Future Land Use map designation change from Other Public Facilities to Medium Density Residential is requested and is supported with a planned development site plan. All requests are consistent with the goals, objectives, and policies of the Village's Comprehensive Plan.

III. Waivers Requested

The applicant is seeking the following waivers:

Waiver #1: The applicant is requesting a waiver from Sec. 34-1328 to allow a 20' parking drive aisle when adjacent to 90-degree parking instead of the 26' parking drive aisle required.

Waiver #2: The applicant is requesting a waiver relief from Sec. 34-766(1) to allow a minimum lot area of 220,849 square feet (5.07 acres) instead of the 360,676.80 square feet (8.28 acres) required for 42 dwelling units.

The applicant's full justification to the waivers is attached hereto.

a. <u>The request is in harmony with and is consistent with the purpose and intent of the Village's Comprehensive Plan and Land Development Code and that such waiver will not be injurious to the area involved or otherwise detrimental to the public health, safety, and welfare.</u>

Waiver 1: It is important to note that each driveway is designed with a proposed depth of 20 feet, which is longer by 2 feet from a standard 90-degree angle parking space.

The internal road has a 20-foot asphalt pavement, a 4-foot paver strip and a 2-foot curb/gutter along both sides of the road totaling 28 feet in width. Therefore, when comparing the internal road with townhouse units/driveways located on both sides of the street to a two-way drive aisle of a parking lot, with 90-degree angle parking spaces on both sides of the drive aisle, the proposed dimension measures 68 feet versus 62 feet as required for the parking lot.
The second scenario is where the proposed townhouse units/driveways abut an internal street with parking spaces located on the other side of the street. The proposed dimension of the internal street is 28 feet, and exceeds the drive aisle dimension of 26 feet.

It is important to note that Section 34-1328 has a conflict between the dimensions for the aisle width for a 90-degree parking lot, the Table of 34-1328 indicated a 27-foot aisle width whereas the graphic for the 90- degree angle parking layout shows 26 feet aisle width is required, after consultation with Village Staff, the latter dimension is confirmed to be correct. Therefore, the request is to reduce the aisle width from 26 feet to 20 feet for those areas where 90-degree angle parking are located.

In addition to the proposed signage on speed limit; installation of speed tables and striping of crosswalks will provide a safe and environment for the residents of this development.

Since the aisle width reduction is internal to the development, by granting this waiver, it will not be injurious or detrimental to the public health, safety and welfare.

Waiver 2: The request to allow a reduced lot size from the required minimum lot requirements is outside of the Applicant's control and will not affect the public health safety, and welfare.

b. <u>The request results from innovative design in which other minimum standards are exceeded.</u>

Waiver 1: As mentioned in Criteria 1 above, the proposed townhouse planned development complies with the performance standards of a Residential Planned Development of Section 34-1063 – Performance Standards by:

a. providing sidewalks on both sides of the street; and will be interconnected with other pedestrian amenities and access to individual units.
b. utilizing existing curb cut to the Church and improve the northern access point as the main ingress/egress for the townhouse development.
c. providing adequate parking for both residents and guests.
d. providing pedestrian scale street lighting along internal sidewalks.
e. providing amenities that are in a central location of the development and will be accessible by a safe pedestrian circulation system.
f. providing landscape buffers along the perimeter of the planned development to address any potential impact.

As such, by complying with those applicable planned development performance standards, of which these performance standards are examples of innovative design and can be used as a guideline for an applicant to follow. Therefore, the Applicant is providing an innovative design for the overall development, and with the additional traffic calming components such as defining parking areas with decorative pavement; speed limit signage and speed tables, the minimum design standards are exceeded.

Waiver 2: The request to allow a reduced lot size is not the result of innovative design. The lot is predisposed to be smaller than the required minimum and is outside of the control of the applicant.

c. <u>The request demonstrates that granting of the waiver will result in preservation of valuable natural resources, including drainage and recharge areas, natural areas, etc.</u>

Waiver 1: The granting of the waiver request related to reduced drive aisle width will result a lesser impervious area, and will provide a more efficient drainage system for the proposed development.

Waiver 2: The request to allow a reduced lot size will not result in preservation of valuable natural resources. The lot is predisposed to be smaller than the required minimum and is outside of the control of the applicant.

d. <u>The request demonstrates public benefits to be derived, including but not limited to such benefits as dedication of rights-of-way, extensions of pedestrian linkages outside of the project boundaries, preservation of open areas and use of desirable architectural, building, and site design techniques.</u>

Waiver 1: By allowing a narrower drive aisle adjacent to parking spaces, there is still sufficient area to provide safe vehicular maneuvering area and a sidewalk on both sides of the internal street, and therefore establishes a safe pedestrian circulation system that connects external to the public sidewalk along Kirk Road and Forest Hill Boulevard.

Waiver 2: The request to allow a reduced lot size does not demonstrate public benefits to be derived. The lot is predisposed to be smaller than the required minimum and is outside of the control of the applicant.

e. <u>The request provides sufficient screening and buffering to screen adjacent uses from adverse impacts caused by the granting of a waiver.</u>

Waiver 1: The request will not jeopardize the screening of the subject site as it relates to a decreased drive aisle width which is internal to the planned development, and only in a specific portion of the site.

Waiver 2: The waiver does not generate any adverse impacts related to adjacent properties; however, the Applicant will sufficiently screen and buffer the property.

f. Economic issues may not be used to justify waivers.

Waivers 1 & 2: Economic issues are not used as a justification for these requests.

g. The request is compatible with existing and potential land uses adjacent to the development site.

Waivers 1 & 2: These requests are consistent with the existing and potential land uses adjacent to the development site. The surrounding uses to the north and west are residential communities. The request of a decreased drive aisle and decreased minimum lot area will not jeopardize the subject site's compatibility with the adjacent uses.

Staff supports the applicant's request based on the intent of the applicant to maximize the utilization of the land reducing the amount of impervious surface and consistency with the Village Comprehensive Plan allowing for innovative designs. Although the acreage is below the minimum required for 42 residential dwelling units, the property can still be developed in the proposed manner without major any adverse impact to the surrounding properties.

Staff has concerns about congestion issues due to high pedestrian traffic during the neighboring school's entry and dismissal. Palm Beach County added a second pedestrian crossing on Kirk Road crossing north of the main intersection on Kirk and Forest Hill to prevent jaywalking and alleviate crowding in the corner crossings. However, the end of the new crosswalk is too close to the driveway access to Dollar General. As a result, students crossing the street walk directly into traffic turning left into Kirk since the lack of distance does not allow stacking. We believe the county could have adverted this issue if the crosswalk were offset a few feet further north away from the driveway access.

Staff have the following recommendation in reference to these concerns:

- *Village and School District Staff recommends that payment of the monetary contribution requested by Palm Beach County School District, be required prior to permitting. Said funds shall be escrowed by the District and earmarked as a contribution to a future pedestrian-oriented traffic signal, pursuant to Palm Beach County specifications, at the mid-block crossing from Palm Springs Middle School to the west side of Kirk Road.*
- *Staff recommends designating the right exit lane, from the new community, a turn-right-only lane during school zone hours to reduce traffic conflicts during peak traffic hours.*

IV. Neighborhood Compatibility

1) The proposed project is located on the west side of Kirk Road between Forest Hill Blvd and LWDD Canal L-7.
2) Surrounding properties to the north and west are mostly single family and multi-family residential dwellings.
3) A mix of different retail and professional services like general retail, restaurants, schools, and professional offices are located to the south and southwest within walking distance along Kirk Rd and Forest Hill Blvd.
4) The site is located about 1.05 miles northwest From Village Hall.
5) Palm Springs Middle School is located east across the street. The Summit Blvd branch of the Palm Beach County Library and the Palm Beach School District Fulton Holland Educational Services Center are other major sites located within a mile of the site.
6) Public transportation is available through Palm Tran bus stops along Kirk Road via route 60 and Forest Hill Blvd via route 46.

V. Regulatory Issues

- The site plan generally conforms to the property development standards of a Residential Planned Development.
  1) Proposed project plan generally meets required site development regulations.
  2) The applicant is responsible to acquire all applicable permits from all regulatory agencies with jurisdiction over the project site, including but not limited to Palm Beach County, Lake Worth Drainage District, and the Village of Palm Springs.
  3) Civil/Utility plans shall be approved by the Village's Engineer.
  4) The proposed development is located within the Airport Regulated areas Zone 1 and Zone 3 for Palm Beach International Airport.
  5) Proposed Site Plan meets the Traffic Performance Standards of Palm Beach County.
  6) A negative impact on the School District of Palm Beach County public school system is expected with the proposed development.

VI. Environmental Issues:

There are no environmental (wetlands, floodplains, etc.) issues identified.

VII. Community Outreach/Notification

- The subject property was posted on January 28, 2022.
- Public Notification letters were mailed to all property owners within 300 feet radius of subject property on January 26, 2022.
- Legal advertisement was published in the paper on February 3, 2022 and will be re-advertised on March 31, 2022.
- Staff has not received any inquiries or comments because of the notices.

VIII. Proposed Development Plan Details

The petitioner's development plans received on April 23, 2021, depicts the following:

- Application for Residential Planned Development Site Plan approval with two (2) waivers for the construction of 50 two-story fee-simple townhomes within 9 buildings.
  1. Site Plan received on April 29, 2021. Last revised and resubmitted on May 13, 2022.
  2. Landscape plans received on April 29, 2021. Last revised and resubmitted on May 13, 2022.
  3. Engineering plan received on April 29, 2021. Last revised and resubmitted on May 13, 2022.
  4. Architectural plans received April 29, 2021 and May 13, 2022.
  5. Photometric plan received April 29, 2021. Revised and resubmitted on January 13, 2022.
  6. Boundary and topographic survey received April 29, 2021.
  7. Traffic study dated April 23, 2021 and received April 29, 2021. Revised October 20, 2021 and received November 5, 2021.
  8. Project narrative and Justification Statement of proposed use received April 29, 2021. Revised and resubmitted on May 13, 2022.
  9. Drainage Statement dated April 22, 2021 and received May 13, 2022.
  10. Conceptual Drainage Plan received April 29, 2021. Revised and resubmitted on January 13, 2022.

IX. Recommendation

The applicant is proposing the development of the 5.07-acre parcel with the construction of 42 two-story fee-simple townhomes within seven buildings.

The townhomes will be three-bedroom homes with a one car garage and a driveway with space for one or two cars. The buildings will be configured with seven (7) six-townhome structures. The community will have one access driveway via the existing Kirk Road right-of-way on the northern segment of the property and only emergency access is proposed thru the southern drive aisle. Amenities include a tot lot, a shade structure with picnic tables, and a recreational open space.

Planning, Zoning & Building Staff has conducted a review of the application and found the proposed Residential Planned Development Site Plan to be consistent with goal, objectives, and policies of the Village's Comprehensive Plan. The proposed project is generally consistent with the Land Development and zoning regulations and all other portions of the code. However, staff has concerns about congestion issues due to high pedestrian traffic during the neighboring school's entry and dismissal.

The proposed residential project provides internal sidewalk connections between the common amenities (tot lot, picnic area) and the buildings to facilitate pedestrian circulation and safety. The proposed project provides open spaces creating common areas for passive/leisure activities. The proposed use does not significantly reduce light and air on adjacent properties and would not be a deterrent to surrounding properties. The new project does not negatively impact natural systems.

In addition, the project exceeds some of the minimum requirements for a Planned Development as shown on the following table:

Land Development Regulations	Required	Proposed
35 percent of the gross land area for open space	77,101 SF. (1.77 acres)	111,949 SF. (2.57 acres) (51%)
40% maximum building coverage	88,340 S.F.	15% (39,752 S.F.)
2.5 Vehicle Parking Spaces per Dwelling Unit + 25 percent allocation for Guest Parking	132 Spaces	141 Spaces

PZ&B Staff recommends conditional approval of the Residential Planned Development Site Plan with two (2) waivers, for the construction of 42 fee-simple townhomes within seven (7) buildings subject to the following forty-three (43) conditions below and a suggestion for a voluntary monetary contribution, requested by the School District to mitigate school impacts:

1. Build out date December 31, 2024.
2. The Final Plat shall be approved and recorded **prior to the issuance of any building permit**.
3. The common amenities shall be completed in their entirety, open for use and accessible to the residents, **prior to the issuance of the 16th Certificate of Occupancy** (40% of the project)
4. An opaque fence shall be provided around the lift station supplemented with landscaping and details shall be provided **at time of permitting**.
5. Village and School District Staff recommends that payment of the monetary contribution requested by Palm Beach County School District, be required **prior to permitting**. Said funds shall be escrowed by the District and earmarked as a contribution to a future pedestrian-oriented traffic signal, pursuant to Palm Beach County specifications, at the mid-block crossing from Palm Springs Middle School to the west side of Kirk Road.
6. Staff recommends designating the right exit lane, from the new community, a turn-right-only lane during school zone hours to reduce traffic conflicts during peak traffic hours (8:00 – 9:00 am and 3:00pm – 4:30 pm).
7. A Utility/Civil Plan shall be approved by the Village Engineer and Palm Beach County Utilities **at time of permitting.**
8. Details of the proposed black aluminum fence shall be provided to the PZB Department and shall be approved by the PZB Director **at time of permitting.**
9. Garages shall be used for parking only. The HOA covenants/ deed restrictions shall prohibit the conversion of garages into habitable spaces or used as storage.
10. The HOA covenants/ deed restrictions shall prohibit the installation of sheds, the parking of boats, commercial vehicles, or recreational vehicles anywhere inside the property. Parking of oversized vehicles that do not fit within the typical parking stall (9'x18.5') shall also be prohibited.

11. The legal instruments providing parking restrictions, shall be reviewed and approved by the Village Attorney and PZB Director **prior to issuance of the first building permit**.
12. Only one or two vehicles respectively shall be parked in the driveways overnight and shall not be permitted to park on or block any sidewalk or drive isles.
13. No parking shall be allowed, under any circumstances, along the drive aisle. Residents and guest parking shall only occur within designated parking stalls, private driveways and private garages.
14. The HOA shall be responsible for all landscape maintenance, including, but not limited to, mowing of private yards and trimming the trees around the entire perimeter.
15. The construction dumpster shall be only provided by Waste Pro USA who is under franchise Agreement with the Village.
16. Conditions of approval stated in Village Engineer's letter (Chen Moore and Associates) shall be satisfied **at time of Civil/Utility application review**.
17. Any existing or proposed utility box/cabinet shall be screened from view, Staff recommends wrapping the cabinets/box with a match design accordingly with the existing/proposed location.
18. Any existing or proposed utility easement shall not overlap more than 5' the landscape buffer.
19. The property owner shall post a notice of annual boundary school assignments for students from this development. The district will provide an 11' x 17' sign to be posted in a clear and visible location in all sales offices and models with the following:

    "NOTICE TO HOMEBUYERS/TENANTS"

    "school age children may not be assigned to the public school closest to their residences. School Board policies regarding overcrowding or other boundary policy decisions affect school boundaries. Please contact the Palm Beach School District Boundary Office at (561) 434-8100 for the most current school assignment(s)".
20. Photometric plans shall be approved by the Planning, Zoning and Building Department **at time of permitting**.
21. Landscaped areas shall be irrigated including but not limited to buffer, islands, planter boxes, etc.
22. The mail pickup and delivery system shall be approved by the United States Postal Service.
23. Irrigation plans shall be provided **at the time of permitting**. Non-potable water shall be used for the irrigation system per Village code.
24. Provide permits from all applicable permitting agencies, including but not limited to, Lake Worth Drainage District, Palm Beach County Water Utilities Department, Palm Beach County Roadway Production Division, and the Village of Palm Springs **at the time of permitting**.
25. The property owner shall register an Agent of Record, prior to issuance of a permit, to establish a contact person responsible for compliance with this Development Order, including site plan/landscape plan details and conditions of approval.
26. A copy of the NPDES Notice of Intent for Generic Permit shall be submitted to the PZB Department at time of permitting.
27. A stabilized surface shall be provided at all times during construction for access by emergency vehicles.
28. All mechanical equipment's and above-ground infrastructure shall be screened from view.
29. The Applicant may be required to undertake additional security measures, based on the number of complaints or calls for service for incidents at the premises, as determined by the Police Chief. Such additional security measures, as approved by the Police Chief, may include increased on-site security at the operator's sole expense.
30. Verify utility and easement locations to ensure that there are no conflicts with landscaping, revise **at time of permitting** as needed.
31. All electric utilities shall be underground.
32. A pre-construction meeting shall be scheduled with the Village Planning, Zoning & Building Development Department prior to commencement of any construction activity. Permits are required from the Planning, Zoning & Building Department prior to commencing any construction or renovation. The project shall be constructed in accordance with the FBC edition in effect **at the time of permitting**.
33. A silt barrier shall be installed around the perimeter of the property (within the affected area for the site improvements and new building construction) prior to commencement of any site work or construction activity, and a track pad shall be installed at the construction entrance(s), both of which shall remain through substantial completion.
34. Any sidewalk broken or damaged during construction shall be replaced by the contractor **prior to CO**.
35. The Landscaping shall be certified by the Landscape Architect upon completion and **prior to Certificate of**

Occupancy/Certificate of Completion of each improvement area.

36. Absolutely no occupancy, other than construction personnel, is permitted **prior to TCO/CO**.
37. Photometrics must be certified by an engineer **prior to CO**.
38. The civil engineer of record shall certify the site construction **prior to Certificate of Occupancy**.
39. The applicant may be required to provide a resident inspector for structural elements such as concrete pours in accordance with Section 109.1.3 FBC 2010 and F.S. 553.791. Determination shall be made at time of pre-construction conference with Planning Zoning and Building Director.
40. The General Contractor shall be on site during all construction activity in accordance with FS 489.1195.
41. The project shall receive approval from all Authorities Having Jurisdiction and submit copies of approvals to the Village of Palm Springs.
42. **At the time of CO**, the petitioner shall provide the Planning, Zoning and Building Department with electronic copies of as-builts.
43. An updated School Capacity Availability Determination letter from the School District of Palm Beach County reflecting 42 residential units shall be provided **prior to permitting**.

44. The School District has requested the Applicant offer a voluntary commitment to make a contribution of $54,888.00 to the School District of Palm Beach County prior to issuance of a building permit, based on School Capacity Availability Determination letter issued on June 23, 2021.

JUSTIFICATION STATEMENT
FLU Map Amendment | Site Plan (Planned Development)
Belmont
Initial Submittal: April 22, 2021
Revised: June 11, 2021; August 20, 2021; December 15, 2021;
April 22, 2022; May 13, 2022

REQUEST

On behalf of D.R. Horton, Inc., the Applicant, WGI is requesting approval of the following:

1) **Future Land Use Map Amendment** from the Other Public Facilities Future Land Use designation to the Medium Density Residential Future Land Use designation.
2) **Site Plan (Planned Development)** to allow a 42-unit fee-simple townhome residential planned development.
   - **Waivers** from the following development standards allowed as part of Planned Development Performance Standards:
     i. Drive aisle width adjacent to 90-degree parking.
     ii. Minimum Lot Area

SITE CHARACTERISTICS

The 5.07-acre subject site, known as "Belmont", is located approximately 600 feet north of the Kirk Road and Forest Hill Boulevard intersection on the west side of Kirk Road. It is identified by Parcel Control Number (PCN) 70-42-44-12-39-000-0020 and has an existing address of 1591 Kirk Road. The subject site is under the jurisdiction of the Village of Palm Springs and has a Future Land Use (FLU) Designation of Other Public Facilities (UI) and is within the Residential Multiple Family (RM) Zoning district. The subject site is not within any of the Village of Palm Spring's overlay districts or within the Community Redevelopment Agency (CRA) district boundary. The subject site is currently being utilized as a Place of Worship use, with four buildings and its associated site elements. A large portion of the subject site is heavily vegetated. A map has been provided below which identifies the subject site's location within the Village, as well as an adjacent parcel's view which provides greater detail regarding the site characteristics and surrounding areas.

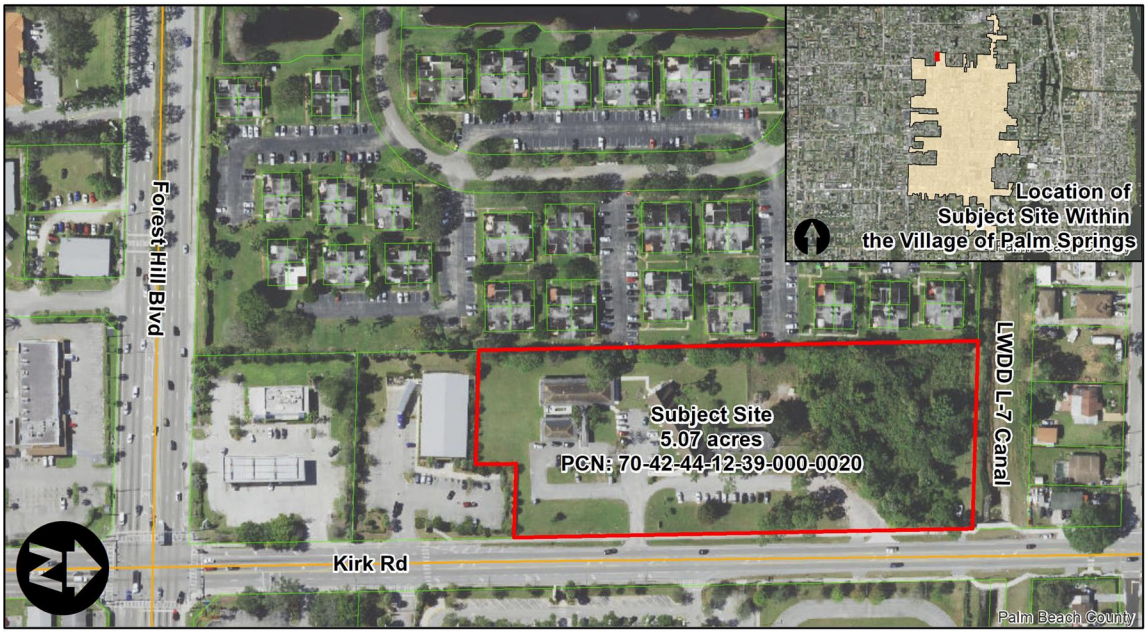

SURROUNDING PROPERTIES

The site is surrounded by a mix of uses, including a school, multifamily residential, single-family residential, and general retail. The mix of surrounding residential uses adjacent to the subject site can generally be found to be consistent with the proposed development. A summary of the surrounding property information has been provided below.

	FLU Designation	Zoning District	Existing Use
North	Medium Density Residential, 5 Units Per Acre (MR-5) (Unincorporated)	Multi-family Residential, Medium Density (RM) (Unincorporated)	Canal & Single-Family Residential
South	Commercial	General Commercial	Retail
East	Education	Governmental	Middle School
West	High Density Residential, 8 Units Per Acre (HR-8) (Unincorporated)	Multi-family Residential, Medium Density (RM) (Unincorporated)	Multi-Family Residential

North: Immediately north of the subject site is the Lake Worth Drainage District (LWDD) L-7 Canal. The L-7 Canal Right-Of-Way (ROW) provides 85 feet of separation from a single-family residential community further north on the other side of the canal. This community is within unincorporated Palm Beach County and retains a FLU designation of MR-5 and zoning district of RM.

South: South of the subject site is a Dollar General convenience store. The property is identified by a FLU designation of Commercial and is within the General Commercial zoning district.

East: To the east of the subject site is the Palm Springs Community Middle School. The property is identified by an Education FLU designation and is within the Governmental zoning district.

West: West of the subject site is the Forest Lakes community. This multi-family residential community is comprised of quadplexes, approximating 228 dwelling units. This community is within unincorporated Palm Beach County and retains a FLU designation of High Density Residential, 8 units per Acre and is within the multi-family residential zoning district.

DEVELOPMENT HISTORY

As previously mentioned, the subject site currently accommodates a Place of Worship, known as Lutheran Church of the Holy Cross. This church was initially approved by Palm Beach County in the late 1960s and has been in operation since. The subject site was voluntarily annexed into the Village of Palm Springs in 2006 under Ordinance Number 2006-13. No other development approvals since the subject site's annexation into the Village have taken place.

DEVELOPMENT PROGRAM

The following outlines the development program for the proposed 42-unit multi-family residential townhouse development:

Density

Pursuant to Section 34-761, the maximum density for the RM zoning district is 19 DU/AC. The proposed 42 townhouse development on the 5.07-acre site will yield a density of 8.28 DU/AC, and is consistent with the district's density regulations.

Building Height

Pursuant to Section 34-1064, the maximum height for a building within the residential planned development district shall be the same as allowed in the applicable land development district, or 35 feet, whichever is higher. The proposed RM zoning district and residential planned development height regulation remain consistent with one another, as three stories or 35 feet. The subject site is in compliance with this requirement as the proposed buildings are two stories with a 20' maximum height to Top of Beam (TOB).

Minimum Acreage Requirement
Pursuant to Section 34-1064(c), all Residential Planned Developments shall be no less than three acres. The subject site is compliant with this requirement as it is 5.07 acres in size. However, it should be noted that per Section 34-766(1), the RM zoning district requires a Minimum Lot Area regulation based on dwelling units, which would require the subject site to be 8.85 acres [15,000 SF for three dwelling units & 9,500 SF for each unit thereafter (42) = 385,500 SF or 8.85 acres].

Open Space and Common Amenity Area
Pursuant to Section 34-1064(d), a residential planned development is required to provide a minimum amount of open space and common amenity area. The minimum total open space requirement for residential planned developments shall be 35 percent of the gross land area, of which 20 percent shall be common amenity area. Based on the standard for required open space, the 5.07-acre subject site is required to provide 1.77 acres of open space. The subject site currently exceeds the code requirement for open space as 2.57 acres or 51 percent of the gross land are proposed to remain as open space. Of the 1.77-acre open space requirement, at least 20 percent of this area must be provided as a common amenity area to all lots such as parks, playgrounds, or other recreational purposes. Based on the open space land area requirement of 1.77 acres the subject site is required to provide 0.35 acres of common amenity area for the proposed community. This requirement is exceeded, as 0.48 acres of common amenity area is proposed central to the community. This amenity area accommodates a tot lot, shade structure, picnic tables and open lawn area.

Lot Coverage
Pursuant to Sec. 34-1064(e)(2), all structures within a Residential Planned Developments shall have a maximum lot coverage of 40%, based on the net area of individual lots. The development proposal is compliant with this requirement as none of the proposed lots exceed 40% lot coverage.

Access
The subject site has frontage along Kirk Road. The proposed site plan provides ingress/egress to the site from a Kirk Road access point at the northern portion of the property. An emergency only stabilized access point to Kirk Road is provided at the southern portion of the subject site.

Buffering
Pursuant to Village Code Article III, Section 34-162.-Required Landscaping, in certain situations the Village requires landscaping around the perimeter of development parcels to create a buffer from adjoining land uses, streets and properties. The subject site is in compliance with this section of the Village's code as there is a landscape buffer provided around the entirety of the subject site. The proposed perimeter buffer varies in width from five feet to 15 feet.

North - A Category 6, 10-foot-wide landscape buffer is required along the northern property line. Pursuant to Section 34-162 – Required buffers, planting for Category 6 requires a hedge not less than three feet in height, with trees, spaced not more than 20 feet apart. The hedge shall be a minimum of three feet in height at time of planting. The required hedge shall be a minimum of two different maintained levels or tiers, and shall be installed in a non-linear (meandering) manner.

South - A five-foot-wide landscape buffer with a six-foot high opaque fence is being proposed along the southern property line. It should be noted that the retail use has an existing buffer and an opaque fence. Combined with the proposed 0.23-acre dry detention area and proposed landscape buffer, increased separation and screening for the proposed residential development will be provided.

East - A 15-foot-wide landscape buffer is proposed along the eastern boundary to provide screening of the subject site from the traffic associated with Kirk Road. The buffer will include a six-foot high aluminum fence and planting on both sides of the fence.

West - Although the property to the west of the subject site consists of a compatible multi-family residential community, a 10-foot-wide landscape buffer is being proposed with a six-foot high opaque fence to maximize screening and privacy between the adjacent existing residential units and the proposed units on the subject site.

Waivers
As provided in Subdivision IX.-Planned Developments, the proposed residential planned development is subject to greater flexibility in design and development standards relative to specific dimensional regulations, in order to encourage ingenuity and originality in subdivision and site design while preserving open space to serve recreational, scenic and other public services. Therefore, this Subdivision of the Village's code allows for waivers from certain criteria. The waivers requested for the subject site relate to drive-aisle width and the minimum lot area. The waiver details of the aforementioned requirements can be found within the subject site's *Conformance with Planned Development Code* section of this Justification Statement.

FUTURE LAND USE MAP AMENDMENT

This Justification Statement for the Future Land Use Map (FLUM) Amendment is provided to demonstrate that the proposed FLUM change is consistent and in compliance with the applicable Objectives and Policies of the Village's Comprehensive Plan, as follows.

Policy A.2

Encourage the development of planned developments (townhouse, zero lot line) projects as an alternative single family living style to accommodate the demand and to preserve the character of the Village, and incorporate regulations into the Village of Palm Springs' Comprehensive Zoning Ordinance.

Applicant's Response:

The proposed townhouse planned development will fulfill this policy as it will serve as a housing alternative to single family homes and will provide more affordable housing opportunities in the community. There is also a companion Site Plan application of which compliance with the Zoning ordinance will be demonstrated.

Policy A.3

Promote the location of multi-family residential development in areas with direct access to collector or arterial streets. The location of multi-family residential development shall be consistent with the high and medium density residential areas established on the Future land Use Map.

Applicant's Response:

The subject site is located approximately 600 feet north of the Kirk Road and Forest Hill Boulevard intersection on the west side of Kirk Road. The proposed access for the townhouse planned development is from Kirk Road, which is classified as an arterial street. As previously mentioned within the Surrounding Properties section of this Justification Statement, the subject site is surrounded by compatible residential uses to the north and west.

Objective F – Level of Service

Meet Level of Service standards for all public facilities and services facilitated by proposed future land uses at the time of, and concurrent with, land development and/or redevelopment of areas in Palm Springs.

Applicant's Response:

The proposed development will meet the required level of service standards, and the proposed concurrency for 42 townhouse units will be reviewed at the Site Plan Review process. See **II.** - **Justification Statement of Site Plan Review** of this document.

Policy G.2 – Density Analysis

Land Development standards for residential land use densities shall be as follows:
Low density residential – 0.1 to 5.80 residential units per gross acre; and
Medium density residential – 5.81 to 10.0 residential units per gross acre; and
High density residential – 10.01 to 19.0 residential units per gross acre.

Applicant's Response:

The proposed request to redesignate the subject site to Medium Density Residential FLU, will allow the development of the site at a density ranging from 5.81 to 10.00 units per gross acre. The applicant is requesting for 42 units which will result in a gross density of 8.28 du/ac.

Policy I.1 – Co-ordination with Other Agencies

As part of the site plan review process, coordinate requests for development orders, permits or project proposals, as appropriate, with adjacent municipalities, Metropolitan Planning Organization, Palm Beach County, Treasure Coast Regional Planning Council, Special Districts, South Florida Water Management District, and State and Federal Agencies.

Applicant's Response:

As part of the companion application, Site Plan review process, the applicant is submitting a Traffic Study prepared by JFO Group Inc., of which the Study indicated the coordination with Palm Beach County Traffic Division and explained how the request will be in compliance with Article 12 of the Unified Land Development Code on the Traffic Performance Standards as part of its traffic impact analysis.

Policy K.1 – Adequate Public Facilities

All land uses that have been developed or approved for development within the Village must be adequately served by existing public utilities and services before the Village may approve any new development, redevelopment, or annexations that would require use of these utilities and services. These utilities and services shall include the following for which the Village has set a Level of Service Standard, including: Water facilities; Sewer facilities; Drainage Facilities; Roadways; and Recreational facilities.

Applicant's Response:

Under these applications, the following documents have been submitted to demonstrate compliance with this Policy: Water facilities: Please see correspondence provided by Palm Beach County Water Utilities District stating that adequate potable water supply and sewage collection and treatment capacities are available to serve the proposed development. Sewer facilities: Please see correspondence provided by Palm Beach County Water Utilities District stating that adequate potable water supply and sewage collection and treatment capacities are available to serve the proposed development.

Drainage facilities: See Drainage Study prepared by Michael B. Schorah and Associates, Inc.

Roadways: See Traffic Study prepared by JFO Group Inc.

Recreational facilities: See Site Plan dated May 13, 2022 which shows 0.48-acre of on-site recreational amenities are provided for the residents.

Objective M - School

The Village shall continue to coordinate with Palm Beach County School Board on the location of new schools within land uses designated as Educational and Medium Density Residential.

Applicant's Response:

The School Capacity Availability Determination (SCAD) Letter was provided to the applicant and has been provided as part of this application, as required.

CONFORMANCE WITH PLANNED DEVELOPMENT CODE

As required by the Village's Development Application, demonstration must be provided that the proposed residential planned development is in conformance with the Planned Development Code Objectives and Performance Standards provided in Subdivision IX of the Village's Code. An outline of how the project conforms with standards has been provided below.

SEC. 41-1062 OBJECTIVES

The development proposal conforms with the Objectives for a Planned Development as outlined below.

1. ***To permit the creation of functional and unique residential, commercial and mixed-use developments that do not adversely impact the village's character and "small town feel".***

   Response: The proposed residential planned development is in conformance with this objective as the requested residential density of 8.28 DU/AC is not out of character for the surrounding area. The site is located in close proximity to many commercial services which will provide immediate service to future residents and create a functional balance between non-residential and residential uses. Furthermore, it is compatible with the surrounding residential land use designations to the west and north. Therefore, by allowing for the approval of the proposed 42 dwelling unit townhouse development, the Village's "Small Town Feel" will not be adversely impacted.

2. ***To promote building siting that takes into consideration the context of the development, the location of nearby uses, and the new development's compatibility with existing neighborhoods.***

Response: The site planning of the subject site took great consideration into the context of the development with the surrounding areas. Townhouses are a great transition between the commercial uses to the south and the single-family residential uses to the north. Furthermore, it is consistent with the adjacent multi-family residential use to the west. Regarding site design, the subject site's required dry detention areas have been located adjacent to the areas with greater chances of incompatibility along the east and south. Most of the townhouses proposed along the east are separated from Kirk Road by the 0.44-acre dry detention area, which is in addition to a 15' landscape buffer. The 0.22-acre dry detention area at the south of the property provides great separation of the proposed townhouses from the adjacent commercial uses.

3. ***To enhance landscaped open space and streetscapes.***

Response: The development proposal is consistent with the aforementioned objective as the open space and streetscape areas of the subject site will be enhance with landscaping, consistent with the Village's landscape requirements. Furthermore, areas of the development exceed the code requirements. No buffer is required along the south property line, however, a 5' wide buffer is proposed to ensure adequate screening is provided.

4. ***To bring unique and creative solutions to new development, the following elements should be considered in the context of the specific site, project and/or use:***

   a) Arrangement and spacing of buildings and open spaces;
   b) Ability to aggregate adjacent lots or parcels, and/or eliminate nonconformities;
   c) Location of access drive and sidewalks to promote circulation and access;
   d) Building coverage;
   e) Sufficient and convenient parking for uses and activities;
   f) Landscape buffers and screening mechanisms to enhance aesthetics and promote compatibility
   g) Adequate lighting for security and pedestrian/vehicular safety; and
   h) Development of large employment centers predominately of light industrial or high technology uses in underutilized corridors. The flexibility of design should promote revitalization of the primary commercial areas and an economic stimulus through job creation to the local economy as well.

Response: The development proposal brings unique and creative solutions to new development, by remaining consistent with the aforementioned subobjectives. As previously mentioned, great consideration was given during the site planning of the subject site. The arrangement and spacing of buildings relative to open spaces was considered heavily to remain consistent with requirements such as the common amenity area requirements and to provide a better quality of living for future residents. The pedestrian and vehicular circulation programs were designed specifically to promote safety for future residents. Each subobjective was weighed heavily as they relate to the specific subject site.

SEC. 34-1063 PERFORMANCE STANDARDS

The development proposal conforms with the performance standards for a Planned Development as outlined below.

Standards:

1. ***Sidewalks on both sides of a street or primary driveway, interconnected with other pedestrian-ways and/or providing access to each building.***

   Response: The development proposal is consistent with this performance standard as sidewalks are proposed on both sides of the proposed streets. Access is provided to each townhouse unit from the proposed sidewalk network. The sidewalk provides connection to Kirk Road to ensure the community is interconnected with the rest of the Village.

2. ***Consolidation of smaller parcels into a larger, unified development project.***

   Response: This is not applicable, as the subject site is one 5.07-acre parcel.

3. ***Consolidation of driveways to eliminate curb cuts, with reciprocal easements for access; provision of access from secondary streets and alleys.***

   Response: The consolidation of driveways has been provided as evidenced within the provided site plan. Access from secondary streets and alleys is not appropriate for the subject site as Townhouse units are proposed, and the size of the subject site does not allow for the use of alleys and secondary streets.

4. ***Shared parking arrangements to reduce impervious surfaces and promote efficient* use *of facilities.***

   Response: As required by the Village's Parking Code, the subject site provides guest parking accommodations throughout the subject site. These guest parking locations were intentionally planned to be central to the entire development to promote efficient use by lots. Furthermore, this consideration allows for reduced impervious area as guest parking is not over abundant and throughout all areas of the subject site.

5. ***Provision of sufficient parking to avoid on-street parking, unless designed with on-street spaces.***

   Response: The subject site retains sufficient parking for the residential units per the Village's Code requirement of 2.5 spaces per unit. Parking spaces are provided for guest parking spaces as required by Village Code; the total parking provided exceeds the requirement and is distributed throughout the development.

6. ***Pedestrian-scale street lighting along sidewalks and pedestrian ways.***

   Response: Street lighting will be provided along sidewalks and pedestrian-ways to create an appropriate pedestrian scale environment.

7. ***Aggregation of open space to create common areas of sufficient size for passive/leisure activities.***

   Response: The required 0.35-acre community amenity area (0.48-acre amenity area proposed) is proposed to remain as one whole area located central to the development. By aggregating the amenity area into one tract rather than multiple smaller tracts throughout the subject site, the land will sufficiently be used for active and passive/leisure activities.

8. ***Continuity of sidewalks and pathways where disconnects occur; and provision of sidewalks to usable open spaces, recreation amenities or public facilities.***

Response: As previously mentioned, crosswalks will be provided throughout the subject site to provide continuity of sidewalks and pathways where disconnects occur. The subject site has an extensive pedestrian circulation pattern which allows uninterrupted circulation from usable open spaces, recreation amenities, public facilities, and individual lots.

9. ***Residential setbacks that allow for a green, semi-private planting area between the sidewalk and house(s).***

Response: The provided setbacks are proposed to allow for a green, semi-private planting area between the sidewalk and houses. Appropriate foundation planting has been planned to be incorporated into the individual lots.

10. ***Promote streetscape where feasible, with maintenance agreements assigning responsibility to adjacent properties.***

Response: Streetscape is promoted throughout the subject site where feasible. This will be achieved through the use of pedestrian scale lighting, as previously mentioned, and by proposing appropriate landscaping to provide adequate streetscape. Maintenance agreements will be assigned through the use of HOA documents.

11. ***Create bus waiting areas for safety, for school buses or mass transit, as may be applicable.***

Response: As coordinated with Palm Beach County School Board, a 10'x15' school bus shelter has been provided at the main entrance of the community.

12. ***Building stepbacks or setbacks to respect existing scale and massing of adjacent neighborhoods and promote compatibility.***

Response: As aforementioned, the site was planned to provide the greatest amount of separation as possible from the most incompatible adjacent uses to the south and east. Much of the structures are massed closer to the northern and western boundary as the adjacent uses and structures are more compatible with the proposed townhouse structures.

13. ***Provision of original, self-confident building design, and prohibition of metal buildings.***

Response: Metal buildings are not proposed as part of this development proposal. Original, self-confident building design is provided as the townhouse buildings are proposed to be contemporary modern.

14. ***Buffers between differing uses to include a masonry wall and landscaping to promote compatibility.***

Response: As depicted in the site photos provided with this submittal, a vinyl fence currently exists along the adjacent commercial property line to the south of the subject site. This fence is proposed to remain as is to provide further screening from the retail use and to promote compatibility. As previously mentioned, a perimeter landscape buffer is proposed in conjunction with the neighboring retail landscape buffer to provide the utmost screening.

15. ***Adequate vehicular circulation, traffic maintenance and/or operational measures that does not negatively impact existing roadway conditions, including avoidance of dead-end streets and t-style turnarounds.***

Response: The proposed development consists of three streets which will provide adequate vehicular circulation that will not negatively impact existing roadway conditions. While there are dead-end streets proposed, there is adequate room for vehicles to maneuver, and based on the proposed townhouse use these dead ends are not anticipated to have any negative impacts.

WAIVERS

Pursuant to the Planned Development Performance standards of the Village's Code, the Applicant may utilize waivers to promote the use of innovative and creative techniques and concepts. As previously mentioned, waivers are requested for the development proposal to allow relief from certain requirements. The waivers requested have been outlined within the table below and meet the waiver criteria as identified within this *Waivers* section.

Waiver	Subject	Code Section	Required	Proposed	Deviation
1.	Street width adjacent to 90-degree parking	Sec. 34-1328	26' wide drive aisle when adjacent to parking	20' wide drive aisle when adjacent to parking	-6'
2.	Min. Lot Area	Sec. 34-766(1)	385,500 SF / 8.85 AC.	220,849 SF / 5.07 AC.	-164,651 SF / -3.78 AC.

1. ***The request is in harmony with and is consistent with the purpose and intent of the Village's Comprehensive Plan and* Land *Development Code and that such waiver will not be injurious to the area involved or otherwise detrimental to the public health, safety, and welfare.***

Waiver 1 Response: It is important to note that each driveway is designed with a proposed depth of 20 feet, which is longer by 2 feet from a standard 90-degree angle parking space.

The internal road has a 20-foot asphalt pavement, a 4-foot paver strip and a 2-foot curb/gutter along both sides of the road totaling 28 feet in width. Therefore, when comparing the internal road with townhouse units/driveways located on both sides of the street to a two-way drive aisle of a parking lot, with 90-degree angle parking spaces on both sides of the drive aisle, the proposed dimension measures 68 feet versus 62 feet as required for the parking lot.

The second scenario is where the proposed townhouse units/driveways abut an internal street with parking spaces located on the other side of the street. The proposed dimension of the internal street is 28 feet, and exceeds the drive aisle dimension of 26 feet.

It is important to note that Section 34-1328 has a conflict between the dimensions for the aisle width for a 90-degree parking lot, the Table of 34-1328 indicated a 27-foot aisle width whereas the graphic for the 90- degree angle parking layout shows 26 feet aisle width is required, after consultation with Village Staff, the latter dimension is confirmed to be correct. Therefore, the request is to reduce the aisle width from 26 feet to 20 feet for those areas where 90-degree angle parking are located.

In addition to the proposed signage on speed limit; installation of speed tables and striping of crosswalks will provide a safe and environment for the residents of this development.

Since the aisle width reduction is internal to the development, by granting this waiver, it will not be injurious or detrimental to the public health, safety and welfare.

Waiver 2 Response: The request to allow a reduced lot size from the required minimum lot requirements is outside of the Applicant's control and will not affect the public health safety, and welfare.

2. ***The request results from innovative design in which other minimum standards are exceeded.***

Waiver 1 Response: As mentioned in Criteria 1 above, the proposed townhouse planned development complies with the performance standards of a Residential Planned Development of Section 34-1063 – Performance Standards by:

a. providing sidewalks on both sides of the street; and will be interconnected with other pedestrian amenities and access to individual units;
b. utilizing existing curb cut to the Church, and improve the northern access point as the main ingress/egress for the townhouse development;
c. providing adequate parking for both residents and guests;
d. providing pedestrian scale street lighting along internal sidewalks;
e. providing amenities that are located in a central location of the development, and will be accessible by a safe pedestrian circulation system;
f. providing landscape buffers along the perimeter of the planned development to address any potential impact.

As such, by complying with those applicable planned development performance standards, of which these performance standards are examples of innovative design and can be used as a guideline for an applicant to follow. Therefore, the Applicant is providing an innovative design for the overall development, and with the additional traffic calming components such as defining parking areas with decorative pavement; speed limit signage and speed tables, the minimum design standards are exceeded.

Waiver 2 Response: The request to allow a reduced lot size is not the result of innovative design. The lot is predisposed to be smaller than the required minimum and is outside of the control of the applicant.

3. ***The request demonstrates that granting of the waiver will result in preservation of valuable natural resources, including drainage and recharge areas, natural areas, etc.***

Waiver 1 Response: The granting of the waiver request related to reduced drive aisle width will result a lesser impervious area, and will provide a more efficient drainage system for the proposed development.

Waiver 2 Response: The request to allow a reduced lot size will not result in preservation of valuable natural resources. The lot is predisposed to be smaller than the required minimum and is outside of the control of the applicant.

4. ***The request demonstrates public benefits to be derived, including but not limited to such benefits as dedication of rights-of-way, extensions of pedestrian linkages outside of the project boundaries, preservation of open areas and*** **use** ***of desirable architectural, building, and site design techniques.***

Waiver 1 Response: By allowing a narrower drive aisle adjacent to parking spaces, there is still sufficient area to provide safe vehicular maneuvering area and a sidewalk on both sides of the internal street, and therefore establishes a safe pedestrian circulation system that connects external to the public sidewalk along Kirk Road and Forest Hill Boulevard.

Waiver 2 Response: The request to allow a reduced lot size does not demonstrate public benefits to be derived. The lot is predisposed to be smaller than the required minimum and is outside of the control of the applicant.

5. ***The request provides sufficient screening and buffering to screen adjacent* uses *from adverse impacts caused by the granting of a waiver.***

   Waiver 1 Response: The request will not jeopardize the screening of the subject site as it relates to a decreased drive aisle width which is internal to the planned development, and only in a specific portion of the site.

   Waiver 2 Response: The waiver does not generate any adverse impacts related to adjacent properties, however, the Applicant will sufficiently screen and buffer the property.

6. ***Economic issues may not be* used *to justify waivers.***

   Response: Economic issues are not used as a justification for these requests.

7. ***The request is compatible with existing and potential* land uses *adjacent to the development site.***

   Response: These requests are consistent with the existing and potential land uses adjacent to the development site. The surrounding uses to the north and west are residential communities. The request of a decreased drive aisle and decreased minimum lot area will not jeopardize the subject site's compatibility with the adjacent uses.

8. ***Waiver requests from minimum common amenity area requirements shall further demonstrate that adequate recreation area is available in the immediate vicinity of the proposed development.***

   Response: This criterion is not applicable as a waiver is not requested from the common amenity area requirements. The development proposal provides adequate community amenity area.

9. ***Waiver requests from maximum height limitations shall further demonstrate that the additional height will not adversely impact adjacent properties and appropriate setbacks are provided as building height increases.***

   Response: This criterion is not applicable as a waiver is not requested from the height limitation requirements. The development proposal is currently under the maximum height threshold of three stories or 35 feet.

CONCLUSION

Based on the above justification and attached information, the petitioner respectfully requests approval of the Future Land Use Map Amendment, and Site Plan to allow a Residential Planned Development application for the subject site.

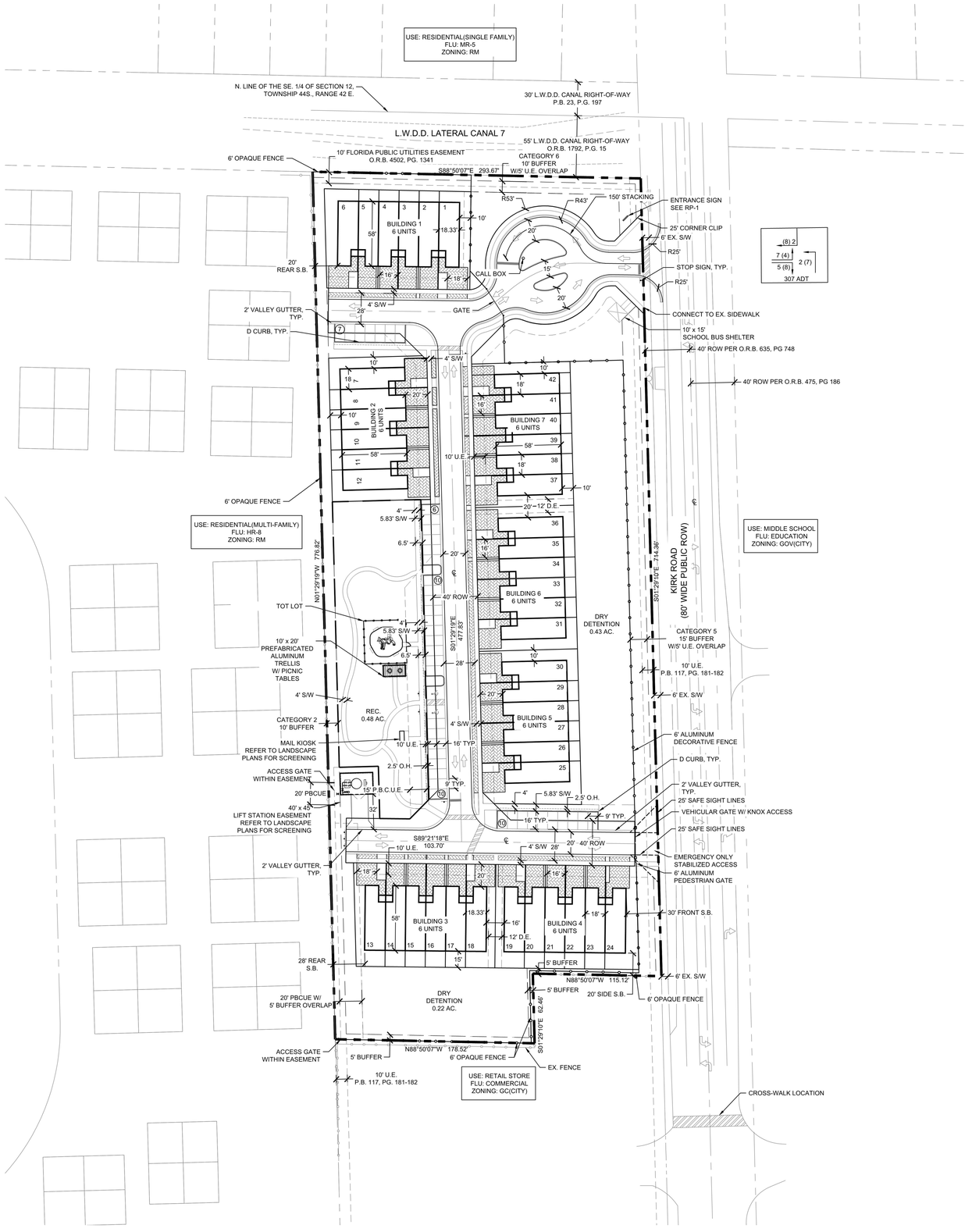

LOCATION MAP

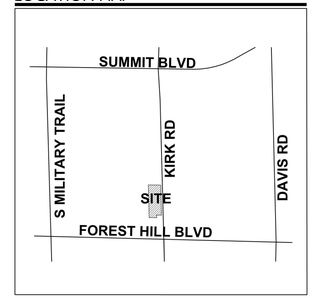

N

0 25 50 100

SCALE: 1" = 50'

SITE DATA

APPLICATION NAME	BELMONT
EXISTING LAND USE DESIGNATION (VILLAGE)	OTHER PUBLIC FACILITIES
PROPOSED LAND USE DESIGNATION (VILLAGE)	MEDIUM DENSITY RESIDENTIAL
EXISTING ZONING DISTRICT (VILLAGE)	RM
PROPOSED ZONING DISTRICT (VILLAGE)	RM/PUD
PCN	70-42-44-12-39-000-0020
EXISTING USE	CHURCH
PROPOSED USE	TOWNHOME RESIDENTIAL
GROSS SITE AREA	5.07 AC.
TOTAL PROPOSED UNITS (TOWNHOUSE)	42 D.U.
GROSS DENSITY	8.28 D.U./AC
OPEN SPACE REQUIRED	1.77 AC. (35%)
OPEN SPACE PROVIDED	2.57 AC. (51%)
PROPOSED PERVIOUS	2.67 AC. (53%)
PROPOSED IMPERVIOUS	2.40 AC. (47%)
COMMON AMENITY REQUIRED	0.35 AC.(20% OF OPEN SPACE)
COMMON AMENITY PROVIDED	0.48 AC.
DRY DETENTION AREA	0.65 AC. (13%)
TOTAL PARKING REQUIRED	132 SP.
RESIDENTIAL PARKING REQUIRED (2.5 SP./D.U.)	105 SP.
GUEST SPACES REQUIRED (25% OF REQ. SP.)	27 SP.
TOTAL PARKING PROVIDED	141 SP.
GARAGE SPACES	42 SP.
DRIVEWAY SPACES	56 SP.
GUEST SPACES	43 SP.
BUILDING HEIGHT	30' MAX
TRAFFIC ANALYSIS ZONE (TAZ)	294

NOTE:
1. REFER TO CIVIL PLANS FOR UTILITIES, GRADING, SIGNAGE AND PAVEMENT MARKING.
2. REFER TO PHOTOMETRIC PLANS FOR LIGHTING LOCATIONS.

PROPERTY DEVELOPMENT REGULATIONS (TOWNHOUSE) SEC.34-1064(e)

ZONING DISTRICT (RM)	MAX BLDG COVER	MIN. SETBACKS			
		FRONT	SIDE	CORNER STREET	REAR
REQUIRED	40%	25'	20'	25'	20'
PROPOSED	18%	30'	20'	N/A	20'

NOTE: PROPERTY DEVELOPMENT REGULATIONS TAKEN FROM PERIMETER OF DEVELOPMENT. PER SEC. 34-1064.

WAIVER CHART

WAIVER SUBJECT	CODE SECTION	REQUIRED	PROPOSED	DEVIATION
MIN. LOT AREA	34-766(1)	385,500 SF / 8.85 AC.	220,849 SF / 5.07 AC.	-164,651 SF / - 3.78 AC.
PARKING DRIVE AISLE	34-1328	26'	20'	-6'

LEGEND

AC. = ACRES
℄ = CENTER LINE
D.E. = DRAINAGE EASEMENT
DRO = DEVELOPMENT REVIEW OFFICERS
D.U. = DWELLING UNITS
EX. = EXISTING
FLU = FUTURE LAND USE
M = MODEL UNIT
O.H.E. = OVERHANG EASEMENT
O.R.B. = OFFICIAL RECORD BOOK
O.S.T. = OPEN SPACE TRACT
P = POSTAL DELIVERY PARKING
P.B. = PLAT BOOK
PDR = PROPERTY DEVELOPMENT REGULATIONS
PG. = PAGE
R = RADIUS
R.O.W. = RIGHT-OF-WAY
S.B. = SETBACK
S/W = SIDEWALK
S.F. = SQUARE FEET
T.B.A. = TO BE ABANDONED
TYP = TYPICAL
TH = TOWNHOME
U.E. = UTILITY EASEMENT

WGI®
2035 Vista Parkway, West Palm Beach, FL 33411
Phone No. 866.909.2220 www.wginc.com
Cert No. 6091 - LB No. 7055

REVISIONS

NO.	DATE	DESCRIPTION	BY
1	6-11-2021	RESUBMITTAL	
2	8-20-2021	RESUBMITTAL	
3	11-03-2021	RESUBMITTAL	
4	12-10-2021	RESUBMITTAL	
5	05-13-2022	RESUBMITTAL	

CAD 5581\00\PL-SITEDWG
JOB NO. 5581.00
DRAWN BY R.C
CHECK BY J.P
DATE 11-03-2021

BELMONT
VILLAGE OF PALM SPRINGS

SITE PLAN

SHEET:
SP-1

Rets Russell P:\5500\5581.01 1951 Kirk Road - Land Dev\PLANS\5581\00\PL-SITE.dwg — Plotted: 5/13/2022 12:48:23 PM Saved: 5/13/2022 12:45:54 AM

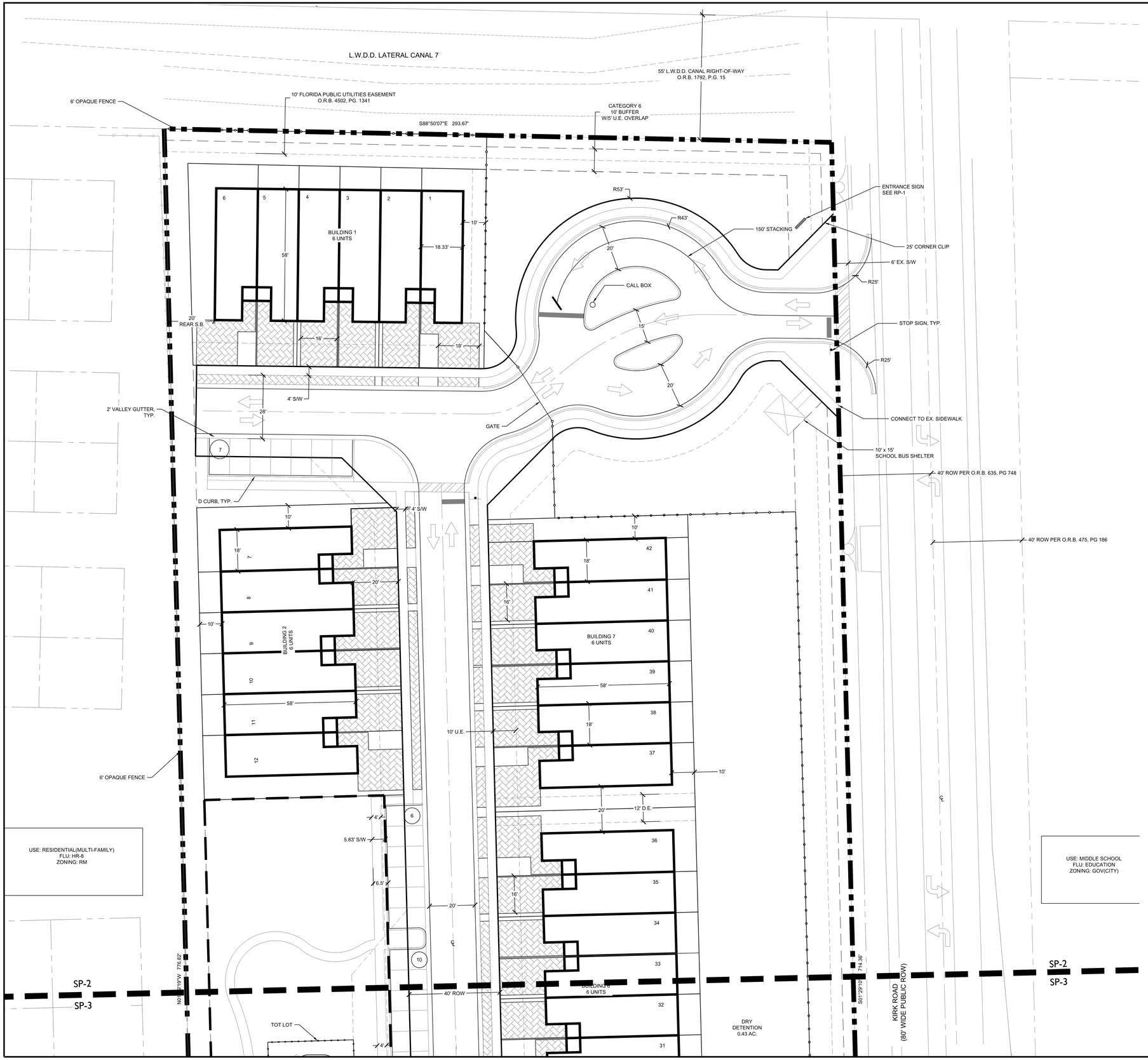

LOCATION MAP

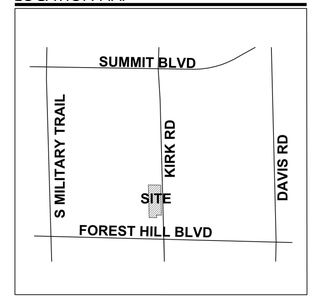

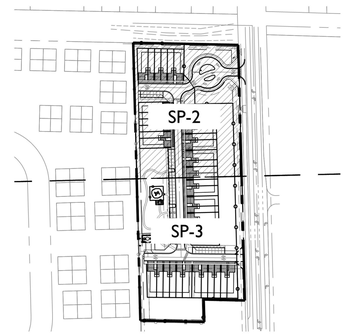

N

0 10 20 40

SCALE: 1" = 20'

LEGEND

AC. = ACRES
℄ = CENTER LINE
D.E. = DRAINAGE EASEMENT
DRO = DEVELOPMENT REVIEW OFFICERS
D.U. = DWELLING UNITS
EX. = EXISTING
FLU = FUTURE LAND USE
M = MODEL UNIT
O.H.E. = OVERHANG EASEMENT
O.R.B. = OFFICIAL RECORD BOOK
O.S.T. = OPEN SPACE TRACT
P = POSTAL DELIVERY PARKING
P.B. = PLAT BOOK
PDR = PROPERTY DEVELOPMENT REGULATIONS
PG. = PAGE
R = RADIUS
R.O.W. = RIGHT-OF-WAY
S.B. = SETBACK
S/W = SIDEWALK
S.F. = SQUARE FEET
T.B.A. = TO BE ABANDONED
TYP = TYPICAL
TH = TOWNHOME
U.E. = UTILITY EASEMENT

WGI®
2035 Vista Parkway, West Palm Beach, FL 33411
Phone No. 866.909.2220 www.wginc.com
Cert No. 6091 - LB No. 7055

REVISIONS

NO.	DATE	DESCRIPTION	BY
1	6-15-2021	RESUBMITTAL	####
2	5-13-2022	RESUBMITTAL	

CAD 558100-PL-SITE.DWG	
JOB NO.	5581.00
DRAWN BY	R.C
CHECK BY	J.P
DATE	4-16-2021

BELMONT
VILLAGE OF PALM SPRINGS

SITE PLAN

SHEET:
SP-2

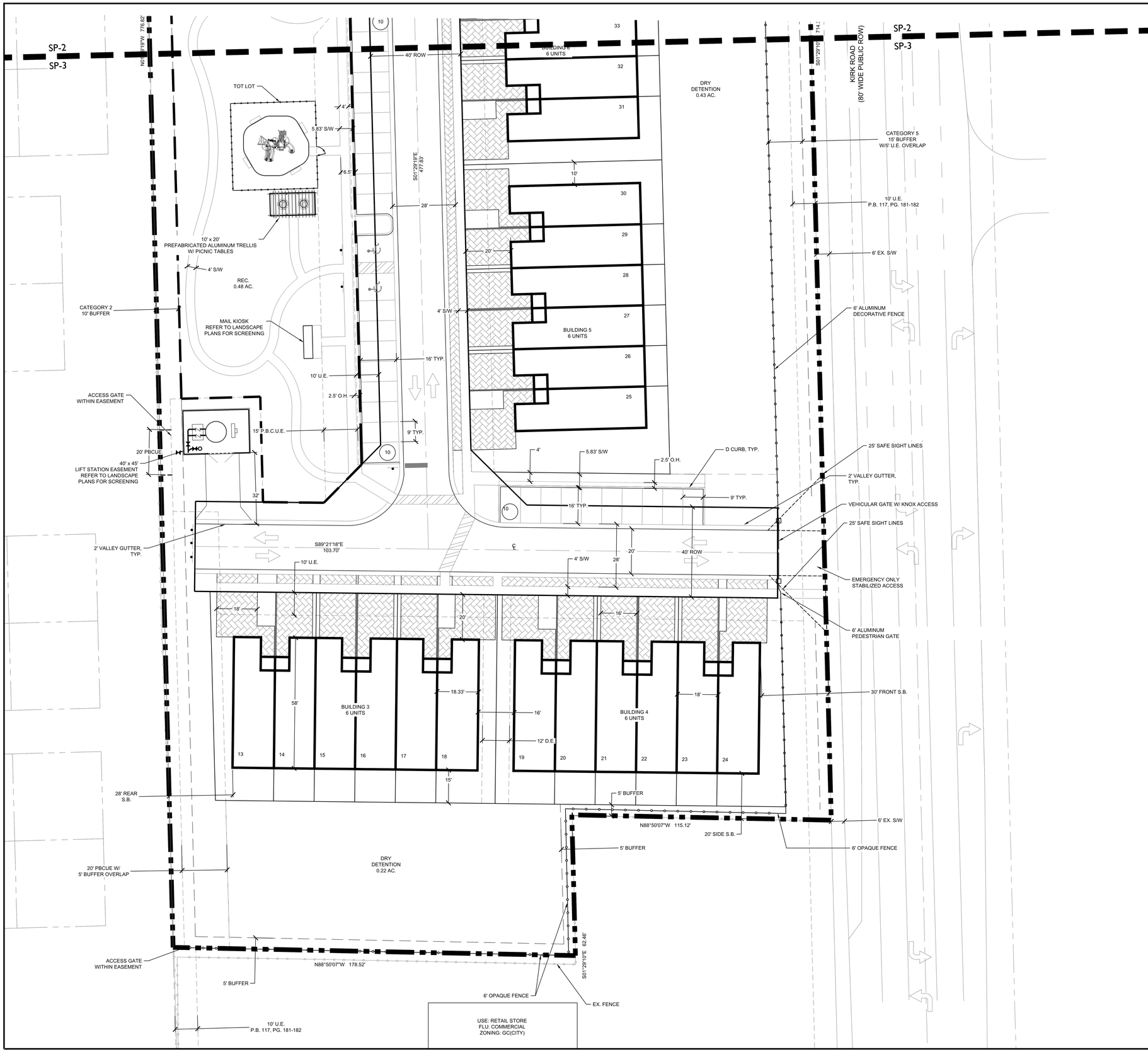

LOCATION MAP

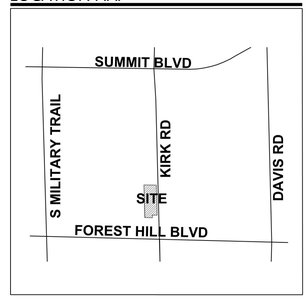

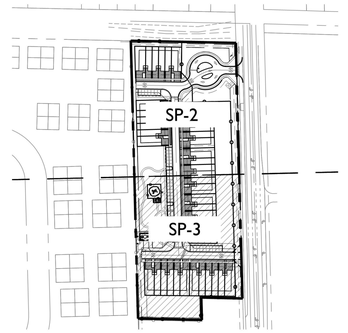

N

0 10 20 40
SCALE: 1" = 20'

LEGEND

AC. = ACRES
℄ = CENTER LINE
D.E. = DRAINAGE EASEMENT
DRO = DEVELOPMENT REVIEW OFFICERS
D.U. = DWELLING UNITS
EX. = EXISTING
FLU = FUTURE LAND USE
M = MODEL UNIT
O.H.E. = OVERHANG EASEMENT
O.R.B. = OFFICIAL RECORD BOOK
O.S.T. = OPEN SPACE TRACT
P = POSTAL DELIVERY PARKING
P.B. = PLAT BOOK
PDR = PROPERTY DEVELOPMENT REGULATIONS
PG. = PAGE
R = RADIUS
R.O.W. = RIGHT-OF-WAY
S.B. = SETBACK
S/W = SIDEWALK
S.F. = SQUARE FEET
T.B.A. = TO BE ABANDONED
TYP = TYPICAL
TH = TOWNHOME
U.E. = UTILITY EASEMENT

WGI®
2035 Vista Parkway, West Palm Beach, FL 33411
Phone No. 866.909.2220 www.wginc.com
Cert No. 6091 - LB No. 7055

REVISIONS

NO.	DATE	DESCRIPTION	BY
1	6-15-2021	RESUBMITTAL	####
2	05-13-2022	RESUBMITTAL	

CAD 558100-PL-SITE.DWG
JOB NO. 5581.00
DRAWN BY R.C
CHECK BY J.P
DATE 4-16-2021

BELMONT VILLAGE OF PALM SPRINGS

SITE PLAN

SHEET:
SP-3

TYPICAL UNIT DETAILS

SCALE: NTS

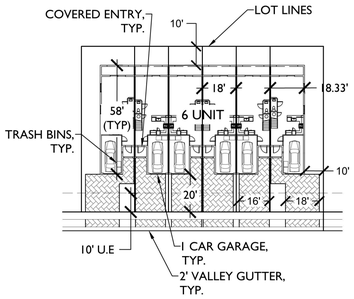

6 UNIT TYPICAL

ENTRY SIGN DETAIL

SCALE: NTS

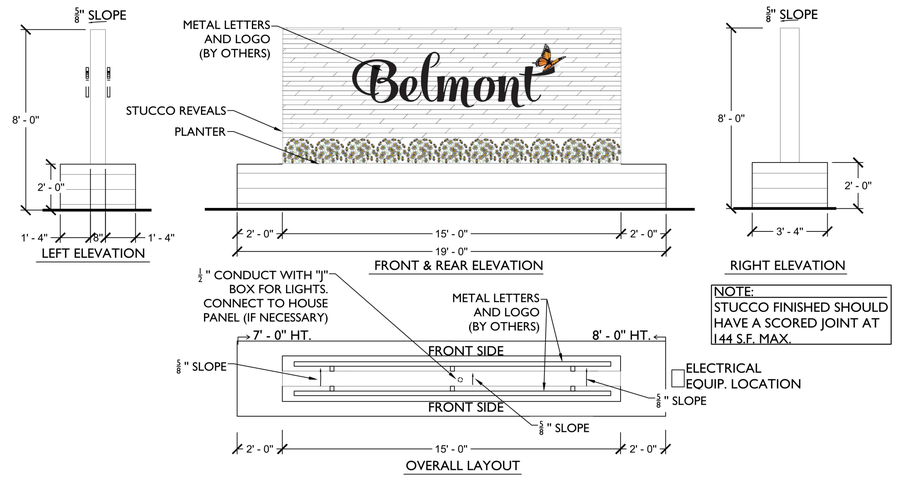

NOTE:
STUCCO FINISHED SHOULD HAVE A SCORED JOINT AT 144 S.F. MAX.

OPEN SPACE PLAN EXHIBIT

SCALE: NTS

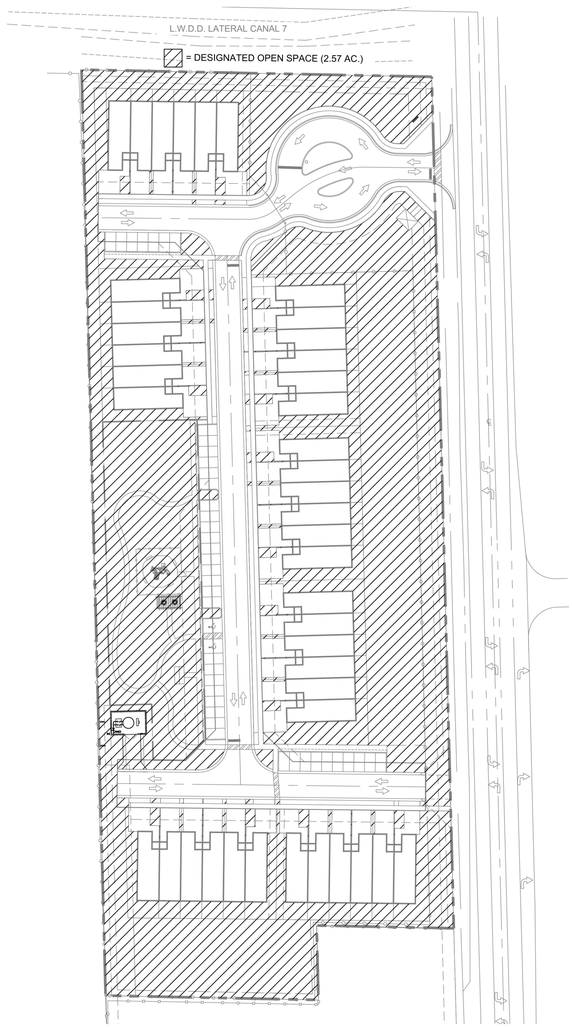

PERVIOUS / IMPERVIOUS PLAN EXHIBIT

SCALE: NTS

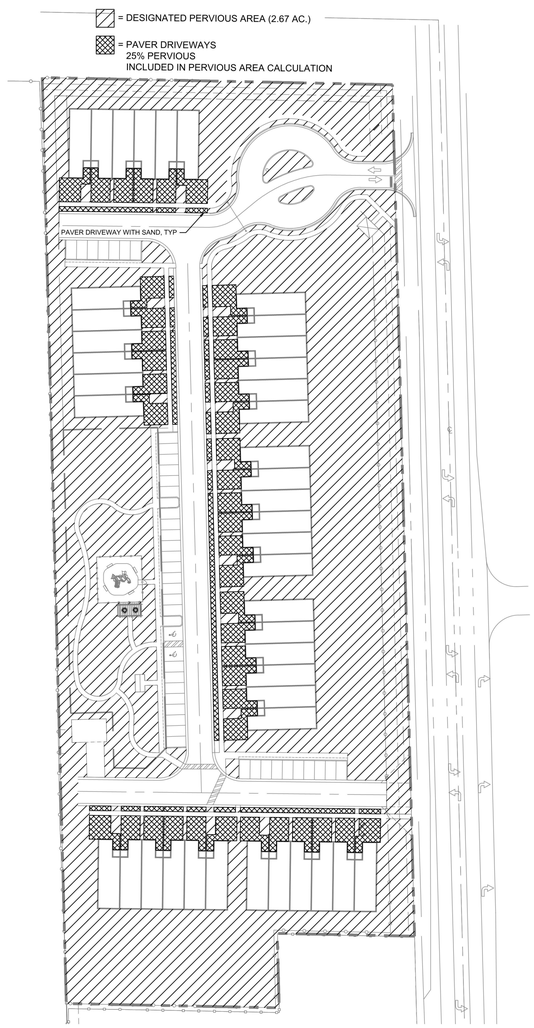

REC. AREA DETAIL

SCALE: NTS

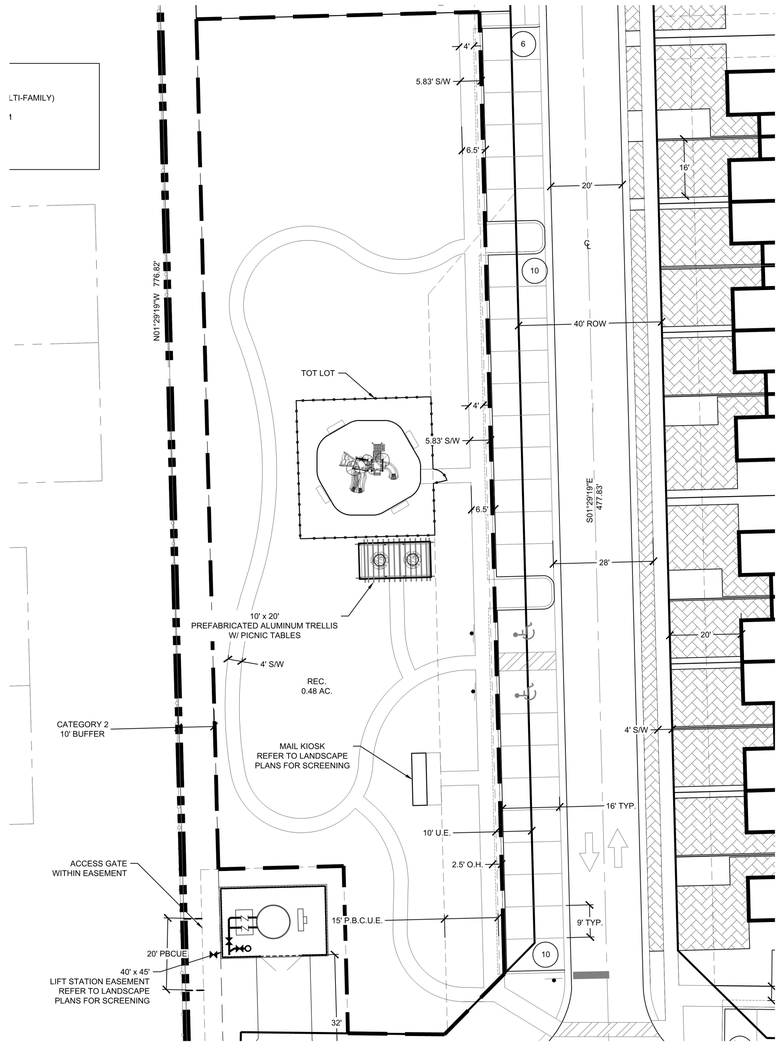

WGI
2035 Vista Parkway, West Palm Beach, FL 33411
Phone No. 866.909.2220 www.wginc.com
Cert No. 6061 - LB No. 7055

REVISIONS

NO.	DATE	DESCRIPTION	BY
1	6-11-2021	RESUBMITTAL	#####
2	8-20-2021	RESUBMITTAL	
3	11-03-2021	RESUBMITTAL	
4	12-10-2021	RESUBMITTAL	
5	05-13-2022	RESUBMITTAL	

CAD 5581\00-PA_SITE.DWG	
JOB NO.	5581.00
DRAWN BY	R.C
CHECK BY	J.P
DATE	4-16-2021

BELMONT
VILLAGE OF PALM SPRINGS

REGULATING PLAN

SHEET:
RP-1

Palm Russell P:\5581\5581.01 1591 Kirk Road - Land Dev\PLANS\5581\5581-PA_SITE.dwg — Plotted: 5/13/2022 12:51:42 PM Saved: 5/13/2022 10:54:54 AM

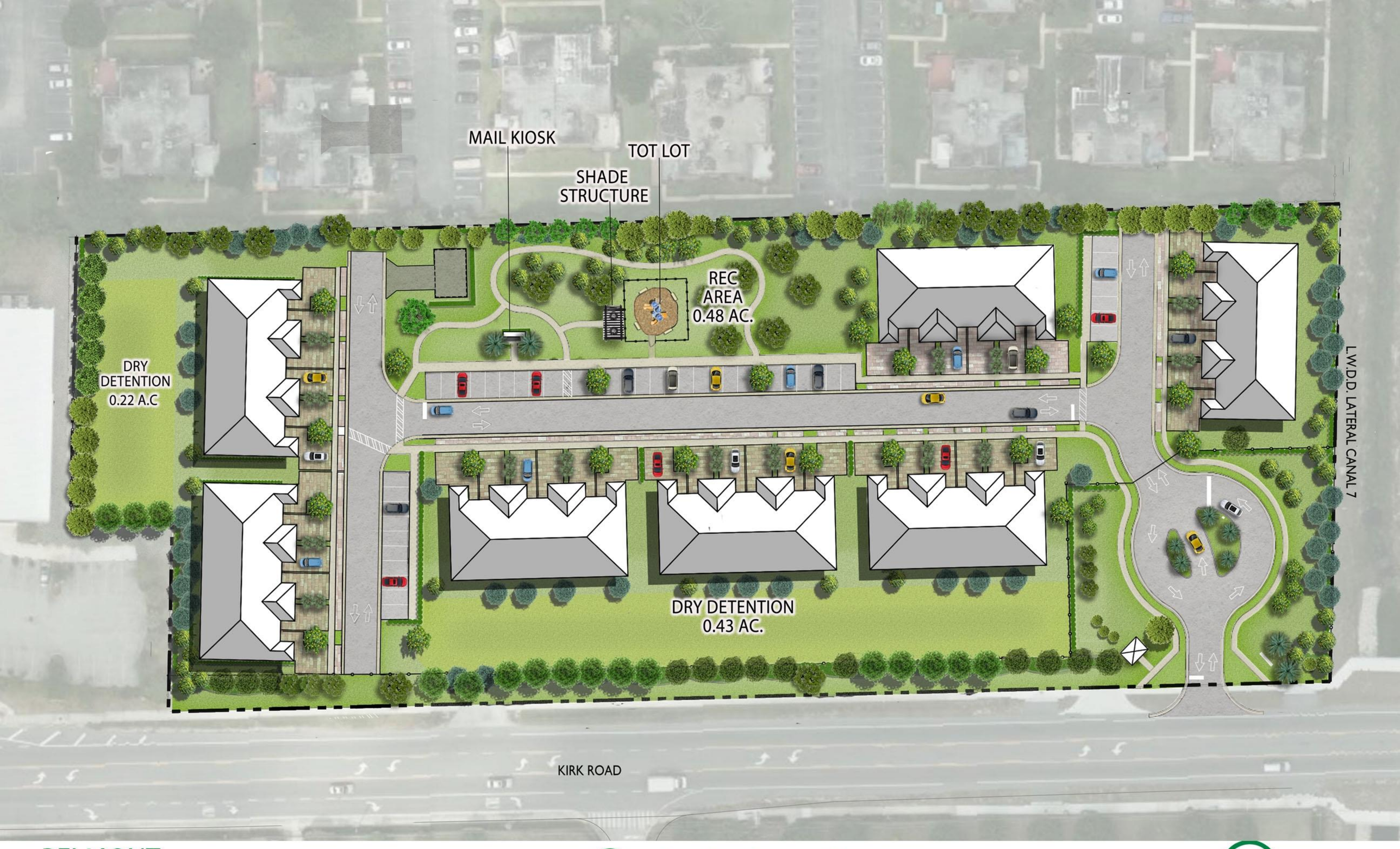

BELMONT

SITE PLAN RENDERING

05-13-2022

DRAWN BY: AE
CHECKED BY: JP

N

0′ 25′ 50′ 100′

SCALE: 1″ = 50′-0″

WGI






AHEAD




DOLLAR GENERAL
1679






Forest Hill
FOREST AIR


STOP
AHEAD

DISCHARGING
OR LOADING
PASSENGERS
FROM TRAVEL
LANES PROHIBITED

ONLY
RIGHT LANE

SCHOOL BUS

1-877-WINDOWS


STOP
SCHOOL BUS
ONLY
1-877-WINDOWS
STORM TIGHT WINDOWS
www.stormtightwindows.com
CRC046091


STOP
AHEAD


adidas


AHEAD


STOP
SCHOOL BUS
ONLY
RIGHT LANE








DISCHARGING
OR LOADING
PASSENGERS
FROM TRAVEL
LANES PROHIBITED
HOLY CROSS
STOP


STOP

CFN 20170130372

OR BK 29015 PG 1789
RECORDED 04/13/2017 15:30:51
AMT 10.00
Doc Stamp 0.70
Palm Beach County, Florida
Sharon R. Bock,CLERK & COMPTROLLER
Pgs 1789 - 1790; (2pgs)

Prepared by and return to:
GARY WALK, ESQ.

Ciklin Lubitz & O'Connell
515 North Flagler Drive 20th Floor
West Palm Beach, FL 33401
561-832-5900
File Number: **13556-55449**
Will Call No.: **69 mmi**

This is not a certified copy

[Space Above This Line For Recording Data]

This Special Warranty Deed is a transfer of unencumbered real property without consideration and as such is subject to minimum documentary stamp tax under Florida Statutes Section 201.02(1)(a) and Florida Administrative Code Section 12B-4.014(2).

Special Warranty Deed

This Special Warranty Deed made as of the 1st day of April, 2017 between **THE LUTHERAN CHURCH OF THE HOLY CROSS, WEST PALM BEACH, FLORIDA, INC., a Florida not for profit corporation** whose post office address is **1591 Kirk Road, West Palm Beach, FL 33406**, grantor, and **FINESTRA-HOLY CROSS, LLC, a Florida limited liability company** whose post office address is **5701 Swaying Palm Lane, Boynton Beach, FL 33437**, grantee:

(Whenever used herein the terms grantor and grantee include all the parties to this instrument and the heirs, legal representatives, and assigns of individuals, and the successors and assigns of corporations, trusts and trustees)

Witnesseth, that said grantor, for and in consideration of the sum TEN AND NO/100 DOLLARS ($10.00) and other good and valuable considerations to said grantor in hand paid by said grantee, the receipt whereof is hereby acknowledged, has granted, bargained, and sold to the said grantee, and grantee's heirs and assigns forever, the following described land, situate, lying and being in **Palm Beach County, Florida**, to-wit:

Lot 2 of LUTHERAN CHURCH - KIRK ROAD according to the Plat thereof as recorded in Plat Book 117, Page 181 of the public records of Palm Beach County, Florida.

Parcel Identification Number: 70-42-44-12-39-000-0020

Subject to taxes for 2017 and subsequent years; covenants, conditions, restrictions, easements, reservations and limitations of record, if any.

Together with all the tenements, hereditaments and appurtenances thereto belonging or in anywise appertaining.

To Have and to Hold, the same in fee simple forever.

And the grantor hereby covenants with said grantee that the grantor is lawfully seized of said land in fee simple; that the grantor has good right and lawful authority to sell and convey said land; that the grantor hereby fully warrants the title to said land and will defend the same against the lawful claims of all persons claiming by, through or under grantors.

In Witness Whereof, grantor has hereunto set grantor's hand and seal the day and year first above written.

Signed, sealed and delivered in our presence:

This is not a certified copy

Witness Name: Gary Walk

Witness Name: Marilynn M Ives

THE LUTHERAN CHURCH OF THE HOLY CROSS, WEST PALM BEACH, FLORIDA, INC., a Florida not for profit corporation

By: Robert Emch
ROBERT EMCH, President

(Corporate Seal)

State of Florida
County of Palm Beach

The foregoing instrument was acknowledged before me this 10 day of April, 2017 by ROBERT EMCH, President of THE LUTHERAN CHURCH OF THE HOLY CROSS, WEST PALM BEACH, FLORIDA, INC., a Florida not for profit corporation, on behalf of the corporation. He [ ] is personally known to me or [X] has produced a driver's license as identification.

[Notary Seal]

Notary Public, State of Florida at Large

My Commission Expires: _____

MARILYNN M. IVES
Notary Public - State of Florida
My Comm. Expires Apr 1, 2018
Commission # FF 074339
Bonded Through National Notary Assn.

DoubleTime®



Village of Palm Springs

Kirk Road

Property Boundary

The Data is provided "as is" without warranty or any representation of accuracy, timeliness or completeness. The burden for determining accuracy, completeness, timeliness, merchantability and fitness for or the appropriateness for use rests solely on the requester. The Village of Palm Springs make no warranties, express or implied, as to the use of the licensed Data. There are no implied warranties of merchantability or fitness for a particular purpose.The requester acknowledges and accepts the limitations of the Data, including the fact that the Data is dynamic and is in a constant state of maintenance, correction and update.

Data Source: Tax Deed Parcels and Village Limits data provided by the Village of Palm Springs, Parcels provided by Palm Beach County, Basemap provided by ESRI World Imagery.

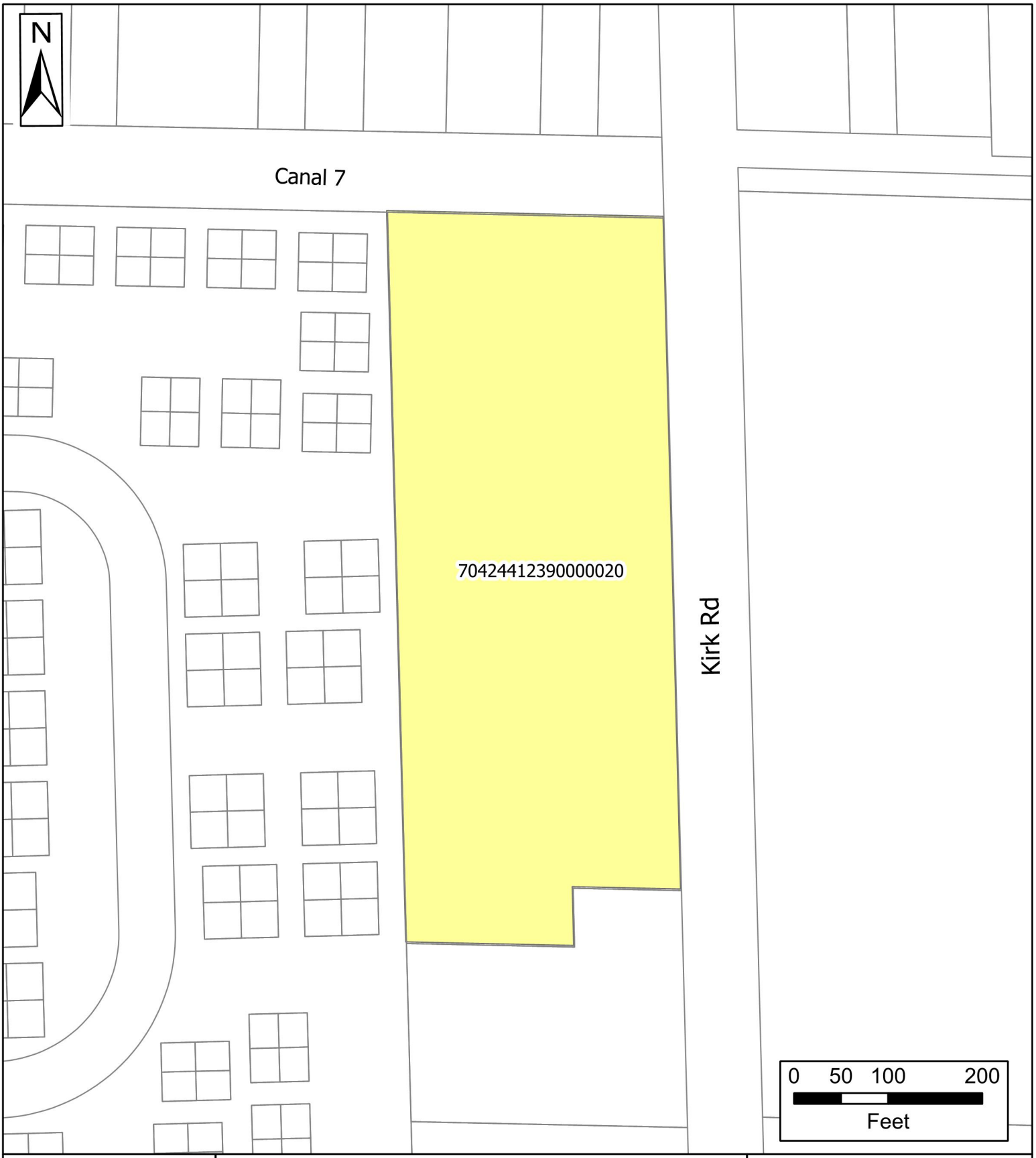

Village of Palm Springs

Kirk Road

Parcels

Property Boundary

The Data is provided "as is" without warranty or any representation of accuracy, timeliness or completeness. The burden for determining accuracy, completeness, timeliness, merchantability and fitness for or the appropriateness for use rests solely on the requester. The Village of Palm Springs make no warranties, express or implied, as to the use of the licensed Data. There are no implied warranties of merchantability or fitness for a particular purpose.The requester acknowledges and accepts the limitations of the Data, including the fact that the Data is dynamic and is in a constant state of maintenance, correction and update.

Data Source: Tax Deed Parcels and Village Limits data provided by the Village of Palm Springs, Parcels provided by Palm Beach County, Basemap provided by ESRI World Imagery.

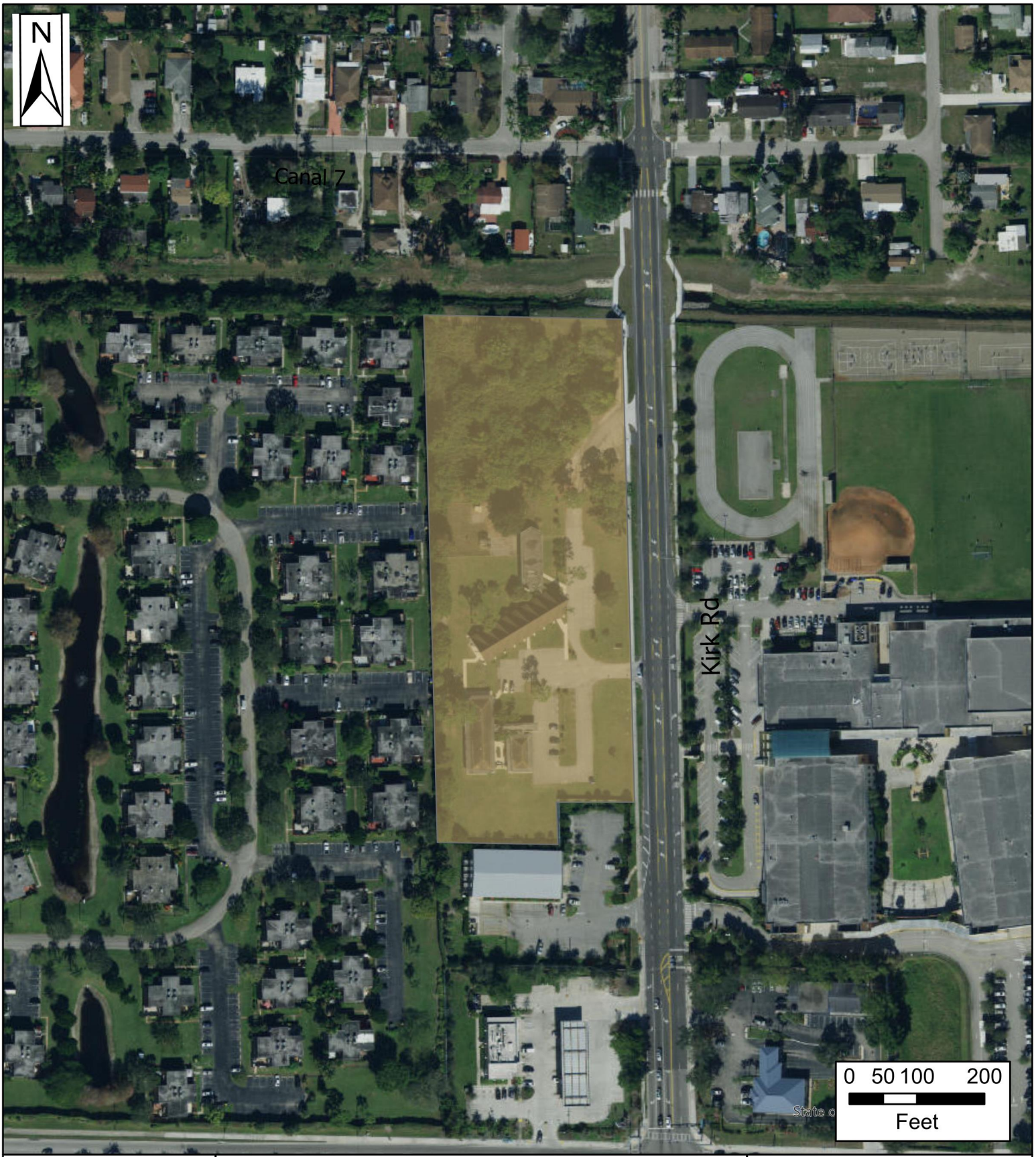

Village of Palm Springs

Kirk Road

Medium Density Residential

The Data is provided "as is" without warranty or any representation of accuracy, timeliness or completeness. The burden for determining accuracy, completeness, timeliness, merchantability and fitness for or the appropriateness for use rests solely on the requester. The Village of Palm Springs make no warranties, express or implied, as to the use of the licensed Data. There are no implied warranties of merchantability or fitness for a particular purpose.The requester acknowledges and accepts the limitations of the Data, including the fact that the Data is dynamic and is in a constant state of maintenance, correction and update.

Data Source: Tax Deed Parcels and Village Limits data provided by the Village of Palm Springs, Parcels provided by Palm Beach County, Basemap provided by ESRI World Imagery.

Village of Palm Springs

Executive Brief

AGENDA DATE: June 9, 2022

DEPARTMENT: Planning, Zoning & Building

ITEM #18: Resolution No. 2022-08: Residential Planned Development Site Plan (SPR22-03) and Two Waivers - Belmont - 1591 Kirk Road *(Quasi-Judicial Hearing)*

SUMMARY: Mr. Jerrod Purser, agent for D.R. Horton, Inc. ("Applicant"), is requesting a site development plan approval (SPR22-03) for a residential planned development project on the property located at 1591 Kirk Road. The applicant is proposing to develop the 5.07-acre site with the construction of 42 two-story fee-simple townhomes. Each townhome will be a three-bedroom home with a one-car garage and a driveway with space for one or two cars.

The buildings will be configured with seven (7) 6-townhome structures. The community will have one access driveway via the existing Kirk Road right-of-way on the northern segment of the property. A second access is being provided for emergency vehicles only to the south. Amenities include a tot lot, a shade structure with picnic tables, and recreational open space.

Note: The Village Code - Section 34-1063(c) Waivers - provides that waivers may be granted by the Village Council following an advisory recommendation by the Planning & Zoning Board. All requests for waivers shall be identified on the site plan and shall accompany an application for site plan approval of planned development.

The applicant is requesting two (2) waivers for the proposed RPD site plan:

1. Relief from Sec. 34-1328 - to allow a 20' wide drive aisle rather than the 26' wide that is required.
2. Relief from Sec. 34-766(1) - to allow the construction of 42 residential dwelling units within 5.07 acres rather than 8.85 acres.

Note: Based on the property standards within the Residential Multi-Family (RM) zoning district (specifically the minimum lot area requirements) outlined in Village Code section 34-766(1), this proposed 5.07-acre (6.12 gross acres) parcel could only support a maximum of 29 dwelling units rather than the proposed forty-two (42) by the developer. The applicant is seeking two (2) waivers in order to obtain approval as a Residential Planned Development (RPD) and therefore the ability to maximize density on the property with forty-two (42) townhomes.

The applicant is requesting a Future Land Use Amendment which is the subject of a separate agenda item. Approval of the Residential Planned Development site plan is dependent on the approval of the Land Use Amendment.

Staff has identified a main area of concern related to the project with the present traffic conditions at the northern section of the Kirk Road and Forest Hill Boulevard intersection, primarily because of peak

traffic caused by the adjacent middle school. The main issue is with increased vehicular and pedestrian traffic during peak morning and afternoon school traffic. Palm Springs Middle School has an enrollment of 1,636 students and the school session is from 9:30 a.m. to 4:05 p.m. The peak traffic times for this area range from 8:00-9:00 a.m. and 3:00-4:30 p.m. Kirk Road has hundreds of cars queued up for student drop off and pick up during these times. Hundreds of students cross the adjacent roads during the beginning of school and dismissal, (officers estimate that about 400 students exit the school during dismissal). Many of them cross the street using the northern crosswalk to go to Dollar General, Cumberland Farms, and Woodlands Plaza. During peak dismissal, the school staff stops vehicular traffic at the north crosswalk crossing for up to seven minutes, and crossing guards at the corner of Kirk and Forest Hill stop vehicular traffic for multiple twenty-second intervals. Additionally, a second pedestrian crossing on Kirk Road was added north of the main intersection on Kirk and Forest Hill to alleviate crowding at the corner crossings. The end of the new crosswalk is too close to the driveway to access Dollar General. As a result, students crossing the street walk directly into traffic turning left onto Kirk, since the lack of distance does not allow stacking.

Village and School District Staff recommends that payment of the monetary contribution requested by Palm Beach County School District shall be escrowed by the District and earmarked as a contribution to a future pedestrian-oriented traffic signal, pursuant to Palm Beach County specifications, at the mid-block crossing from Palm Springs Middle School to the west side of Kirk Road.

The Planning & Zoning Board considered the requested RPD during its regular meeting on February 8, 2022 and recommended denial. Board members expressed concerns regarding the number of units suggested, the density, and the amount of traffic generated from the new development.

The applicant has revised the project to reduce the number of units from 50 to 42 dwelling units and proposes a maximum intensity of 8.28 dwelling units per acre.

The Planning, Zoning & Building Staff does not object to the Residential Planned Development Site Plan with two (2) waivers and recommends conditional approval of the proposed development.

FISCAL IMPACT:

The proposed development of the property is expected to increase the Village's assessed property valuation.

ATTACHMENTS:

1. Resolution No. 2022-08 - Site Plan Development (SPR22-05) - 1591 Kirk Road - Belmont
2. Exhibit "A" Staff Report & Conditions of Approval
3. Applicant Justification Statement
4. Site Plan, Landscape Plans, Architectural Plans, Civil Plans and Letters
5. Color Site Plan and Color Rendering
6. Traffic Conditions
7. Warranty Deed
8. Aerial, Location, FLU Maps

RESOLUTION NO. 2022-08

A RESOLUTION OF THE VILLAGE COUNCIL OF THE VILLAGE OF PALM SPRINGS, FLORIDA, REQUESTING (APPROVING/DENYING), WITH CONDITIONS, A SITE PLAN, (SPR22-03) FOR THE CONSTRUCTION OF A RESIDENTIAL PLANNED DEVELOPMENT PROJECT CONSISTING OF FORTY-TWO (42) TWO-STORY FEE-SIMPLE TOWNHOMES ON THE RESIDENTIAL MULTI-FAMILY PARCEL (APPROXIMATELY 5.07 GROSS ACRES), LOCATED AT 1591 KIRK ROAD AND PROVIDING FOR AN EFFECTIVE DATE.

WHEREAS, Mr. Jerrod Purser, Agent for D.R. Horton Inc. ("Applicant"), is requesting a Site Plan Approval (SPR22-03) for a Residential Planned Development Project with two (2) waivers. The proposed project is 5.07 gross acres (gross area), located at 1591 Kirk Road; and

WHEREAS, the Applicant is requesting the following: two (2) waivers:

1) Requesting a waiver from Sec. 34-766(1) to allow a minimum lot area of 5.07 acres, instead of the 10.59 acres minimum required for 42 dwelling units (d/u).

2) Requesting a waiver from Sec. 34-1328, to allow a 20' parking drive aisle, instead of the 26' parking drive aisle, required for a double traffic circulation.

WHEREAS, the recommendation of the Planning, Zoning and Building Department is to approve this application, subject to staff report conditions; and

WHEREAS, the Planning & Zoning Board ("Board") heard and considered these requests during its February 8, 2022, meeting and the Board's recommendation has been forwarded to the Village Council; and

WHEREAS, the Village Council has heard the request for two (2) waivers in public session; has considered the presentation and other evidence presented by the Applicant; has received and considered the recommendations of the Village Staff; and has otherwise been fully informed regarding this matter; and

NOW THEREFORE, BE IT RESOLVED BY THE VILLAGE COUNCIL OF THE VILLAGE OF PALM SPRINGS, FLORIDA:

Section 1. The Village Council having received and considered the Applicant's request for approval of Site Development Plan (SPR22-03), and two (2) waivers within the proposed Residential Planned Development:

_____Having been otherwise fully apprised of the premises herein and having considered the sworn testimony and other evidence presented at public hearing in light of all the applicable legal criteria set forth in Chapter 34 of the Palm Springs Code, the Village Council hereby approves the said application with the staff report conditions attached hereto as Exhibit "A", and which is incorporated herein by reference.

OR

_____Having been otherwise fully apprised of the premises herein, the Village Council hereby denies the application, finding that all the applicable legal criteria set forth in Chapter 34 of the Palm Springs Code have not been met, and the requested waivers have not been demonstrated to be in harmony with the purpose, objectives, and performance standards of this subdivision based upon the criteria set forth in Palm Springs Code Section 34-1063(c), for the following reason(s):

_____
_____
_____

Notwithstanding any exceptions, conditions or other approvals granted herein, the applicant must conform to all other applicable codes, ordinances, and laws whether stated herein or not.

Section 2. This Resolution shall take effect immediately upon adoption.

Council Member_____offered the foregoing resolution. Council Member_____seconded the motion, and upon being put to a vote, the vote was as follows:

	Aye	Nay	Absent
BEV SMITH, MAYOR	☐	☐	☐
DOUG GUNTHER, VICE MAYOR	☐	☐	☐
JONI BRINKMAN, MAYOR PRO TEM	☐	☐	☐
PATTI WALLER, COUNCIL MEMBER	☐	☐	☐
GARY READY, COUNCIL MEMBER	☐	☐	☐

The Mayor thereupon declared the Resolution duly passed and adopted this _____ day of_____2022.

VILLAGE OF PALM SPRINGS, FLORIDA

BY:_____
BEV SMITH, MAYOR

ATTEST:

BY:_____
KIMBERLY M. WYNN, VILLAGE CLERK

REVIEWED FOR FORM AND LEGAL SUFFICIENCY

BY:_____
GLEN J. TORCIVIA, VILLAGE ATTORNEY

PLANNING, ZONING & BUILDING STAFF REPORT

SUBJECT: Small-Scale Future Land Use Amendment and Residential Plan Development Site Plan with Waivers
Belmont – 1591 Kirk Road

Application Summary			
Applicant / Petitioner	D.R. Horton, Inc. (Contract Purchaser) Jerrod Purser; WGI, Inc. (Agent)	**Submittal Date**	4/29/2021
Reference Name	Belmont	**Case Number**	**SPR22-03**
		Parcel Control No.	70-42-44-12-39-000-0020
Location	1591 Kirk Road	**Site Area**	± 5.07 net acres
P&Z B Meeting	Tuesday, February 8, 2022	**Local Planning Agency**	Thursday, March 10, 2022
Council Meeting (after LPA, 1st Reading)	Thursday, May 12, 2022	**Council Meeting (2nd Reading)**	Thursday, June 9, 2022

Requests	
Proposed Use	Small-Scale Future Land Use Amendment to change the land use from Other Public Facilities to Medium Density Residential and Residential Planned Development Site Plan with waivers for the construction of 42 two-story fee-simple townhomes within seven (7) buildings.
Number of Buildings	Seven (7) Buildings (approximately 78,848 S.F. total)
Waivers	1. Requesting a waiver from Sec. 34-1328 to allow a 20' parking drive aisle instead of the 26' parking drive aisle required. 2. Requesting a waiver from Sec. 34-766(1) to allow a minimum lot area of 5.07 acres (220,849 SF) instead of the 8.85 acres (385,500 SF) minimum requirement.

Parking			
Code	**Required**	**Provided**	**Meets Requirement**
Total Parking	**Total of 132 spaces needed** 2.5/ DU + 25% for guest	141 spaces total 42 One-Car Garages, 56 Driveway spaces, 56 guest spaces	Yes

Setbacks			
Code	**Required Minimum**	**Proposed**	**Meets Requirement**
Front Yard	25'	30'	Yes
Rear Yard	20'	20'	Yes
Side Yard	20'	20'	Yes

Site Characteristics			
Existing Use	Church	**Proposed Use**	Townhomes
Existing Zoning	Residential Multiple-Family (RM)	**Proposed Zoning**	Residential Multiple-Family (RM)
Existing Future Land Use	Other Public Facilities	**Proposed Future Land Use**	Medium Density Residential
Proposed Density	8.28 du/acres (Maximum permitted on Medium Density Residential is 10 du/acre)		

Surrounding Existing Land Use, Future Land Use, and Zoning			
Direction	**Existing Use**	**Future Land Use**	**Zoning District**
North	LWDD Canal	Unincorporated PBC	Unincorporated PBC
South	Retail	Commercial	Commercial General (CG)
East	Palm Springs Middle School	Education	Governmental (G)
West	Multi-Family Residences	Unincorporated PBC	Unincorporated PBC

Recommendation

Staff has concerns regarding congestion issues due to high pedestrian traffic during the neighboring school's entry and dismissal. A second pedestrian crossing on Kirk Road was added crossing north of the main intersection on Kirk and Forest Hill to prevent jaywalking and alleviate crowding in the corner crossings. However, the end of the new crosswalk is too close to the driveway access to Dollar General. As a result, students crossing the street walk directly into traffic turning left into Kirk since the lack of distance does not allow stacking.

Village and School District Staff recommends that payment of the monetary contribution requested by Palm Beach County School District, be required prior to permitting. Said funds shall be escrowed by the District and earmarked as a contribution to a future pedestrian-oriented traffic signal, pursuant to Palm Beach County specifications, at the mid-block crossing from Palm Springs Middle School to the west side of Kirk Road.

Additionally, staff recommends designating the right exit lane, from the new community, a turn-right-only lane during school zone hours to reduce traffic conflicts during peak traffic hours (8:00 – 9:00 am and 3:00pm – 4:30 pm)

Even with the concerns outlined in this staff report, Planning, Zoning & Building Staff recommends conditional approval of the new residential medium density planned development site plan, as depicted on the proposed site plan, based on consistency with the Village Comprehensive Plan and compatibility with surrounding uses.

The Planning and Zoning Board considered the application and recommended denial – motion carried 3-2. After the Planning & Zoning Board consideration, the project was revised to reduce the number of units from 50 to 42 dwelling units.

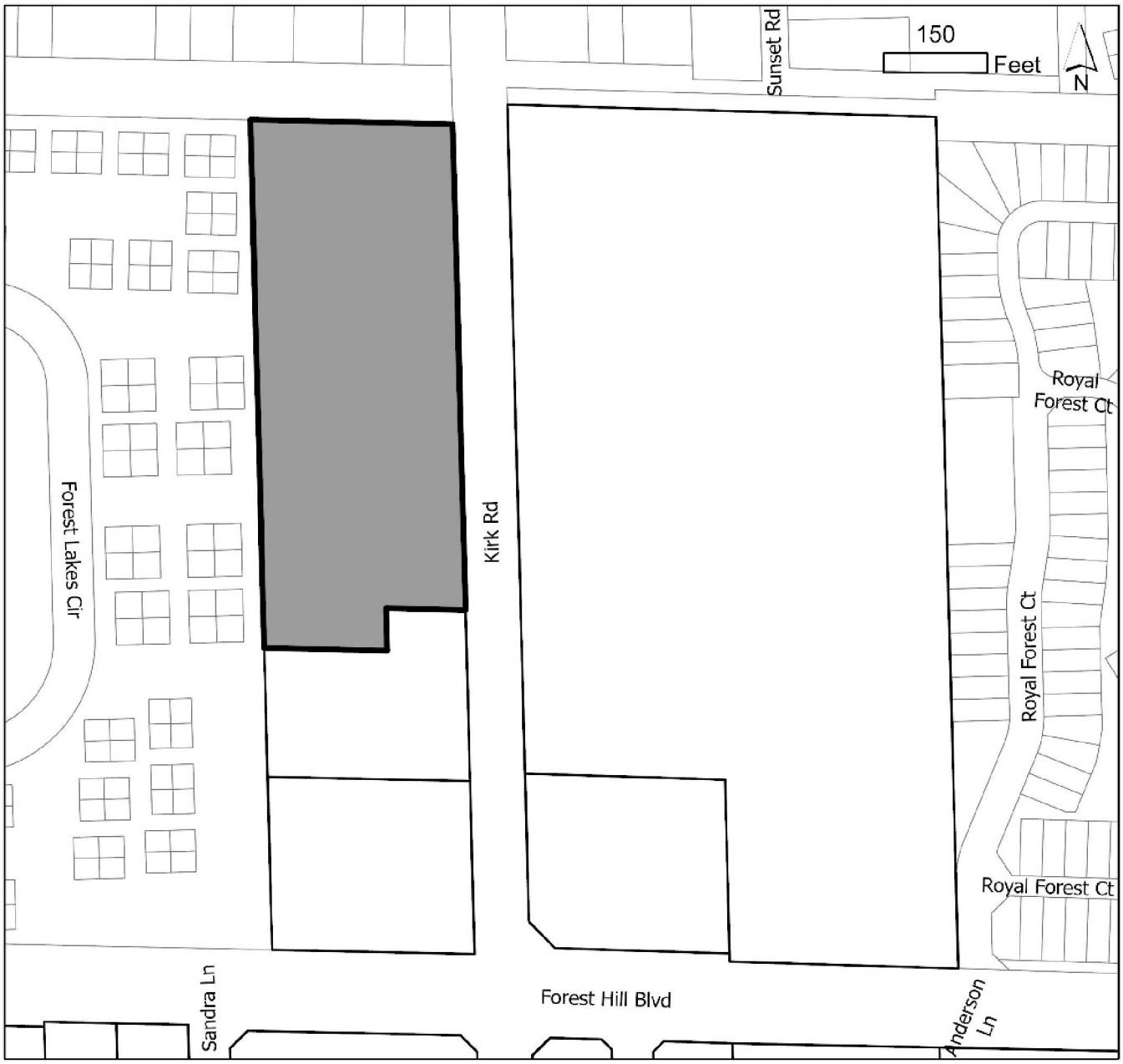

I Site History

- Ordinance 2006-13: Annexation
  The property located at 1591 Kirk Road was annexed into the Village of Palm Springs on April 27, 2006. The property maintained Palm Beach County's Future Land Use Designation of Institutional and Palm Beach County's Zoning Designation of Residential Multi-Family/Medium Density with a Class A Conditional Use.

- Ordinance 2007-26: Future Land Use Map Amendment
  On February 28, 2008, the Village Council adopted the resolution to change the property's Future Land Use designation to Other Public Buildings and Zoning Designation to Residential Multiple Family.

- Ordinance 2014-02: Small Scale Land Use and Zoning
  The 0.77-acre southern vacant portion of the parcel was carved out with a FLU Map Amendment to Commercial and rezoning to Commercial General.

II. Comprehensive Plan Consistency

- The subject property's Future Land Use Designation and Zoning are Other Public Facilities and Residential Multi-Family, respectively. The Future Land Use map designation change from Other Public Facilities to Medium Density Residential is requested and is supported with a planned development site plan. All requests are consistent with the goals, objectives, and policies of the Village's Comprehensive Plan.

III. Waivers Requested

The applicant is seeking the following waivers:

Waiver #1: The applicant is requesting a waiver from Sec. 34-1328 to allow a 20' parking drive aisle when adjacent to 90-degree parking instead of the 26' parking drive aisle required.

Waiver #2: The applicant is requesting a waiver relief from Sec. 34-766(1) to allow a minimum lot area of 220,849 square feet (5.07 acres) instead of the 360,676.80 square feet (8.28 acres) required for 42 dwelling units.

The applicant's full justification to the waivers is attached hereto.

a. <u>The request is in harmony with and is consistent with the purpose and intent of the Village's Comprehensive Plan and Land Development Code and that such waiver will not be injurious to the area involved or otherwise detrimental to the public health, safety, and welfare.</u>

Waiver 1: It is important to note that each driveway is designed with a proposed depth of 20 feet, which is longer by 2 feet from a standard 90-degree angle parking space.

The internal road has a 20-foot asphalt pavement, a 4-foot paver strip and a 2-foot curb/gutter along both sides of the road totaling 28 feet in width. Therefore, when comparing the internal road with townhouse units/driveways located on both sides of the street to a two-way drive aisle of a parking lot, with 90-degree angle parking spaces on both sides of the drive aisle, the proposed dimension measures 68 feet versus 62 feet as required for the parking lot.
The second scenario is where the proposed townhouse units/driveways abut an internal street with parking spaces located on the other side of the street. The proposed dimension of the internal street is 28 feet, and exceeds the drive aisle dimension of 26 feet.

It is important to note that Section 34-1328 has a conflict between the dimensions for the aisle width for a 90-degree parking lot, the Table of 34-1328 indicated a 27-foot aisle width whereas the graphic for the 90- degree angle parking layout shows 26 feet aisle width is required, after consultation with Village Staff, the latter dimension is confirmed to be correct. Therefore, the request is to reduce the aisle width from 26 feet to 20 feet for those areas where 90-degree angle parking are located.

In addition to the proposed signage on speed limit; installation of speed tables and striping of crosswalks will provide a safe and environment for the residents of this development.

Since the aisle width reduction is internal to the development, by granting this waiver, it will not be injurious or detrimental to the public health, safety and welfare.

Waiver 2: The request to allow a reduced lot size from the required minimum lot requirements is outside of the Applicant's control and will not affect the public health safety, and welfare.

b. <u>The request results from innovative design in which other minimum standards are exceeded.</u>

Waiver 1: As mentioned in Criteria 1 above, the proposed townhouse planned development complies with the performance standards of a Residential Planned Development of Section 34-1063 – Performance Standards by:

a. providing sidewalks on both sides of the street; and will be interconnected with other pedestrian amenities and access to individual units.
b. utilizing existing curb cut to the Church and improve the northern access point as the main ingress/egress for the townhouse development.
c. providing adequate parking for both residents and guests.
d. providing pedestrian scale street lighting along internal sidewalks.
e. providing amenities that are in a central location of the development and will be accessible by a safe pedestrian circulation system.
f. providing landscape buffers along the perimeter of the planned development to address any potential impact.

As such, by complying with those applicable planned development performance standards, of which these performance standards are examples of innovative design and can be used as a guideline for an applicant to follow. Therefore, the Applicant is providing an innovative design for the overall development, and with the additional traffic calming components such as defining parking areas with decorative pavement; speed limit signage and speed tables, the minimum design standards are exceeded.

Waiver 2: The request to allow a reduced lot size is not the result of innovative design. The lot is predisposed to be smaller than the required minimum and is outside of the control of the applicant.

c. <u>The request demonstrates that granting of the waiver will result in preservation of valuable natural resources, including drainage and recharge areas, natural areas, etc.</u>

Waiver 1: The granting of the waiver request related to reduced drive aisle width will result a lesser impervious area, and will provide a more efficient drainage system for the proposed development.

Waiver 2: The request to allow a reduced lot size will not result in preservation of valuable natural resources. The lot is predisposed to be smaller than the required minimum and is outside of the control of the applicant.

d. <u>The request demonstrates public benefits to be derived, including but not limited to such benefits as dedication of rights-of-way, extensions of pedestrian linkages outside of the project boundaries, preservation of open areas and use of desirable architectural, building, and site design techniques.</u>

Waiver 1: By allowing a narrower drive aisle adjacent to parking spaces, there is still sufficient area to provide safe vehicular maneuvering area and a sidewalk on both sides of the internal street, and therefore establishes a safe pedestrian circulation system that connects external to the public sidewalk along Kirk Road and Forest Hill Boulevard.

Waiver 2: The request to allow a reduced lot size does not demonstrate public benefits to be derived. The lot is predisposed to be smaller than the required minimum and is outside of the control of the applicant.

e. <u>The request provides sufficient screening and buffering to screen adjacent uses from adverse impacts caused by the granting of a waiver.</u>

Waiver 1: The request will not jeopardize the screening of the subject site as it relates to a decreased drive aisle width which is internal to the planned development, and only in a specific portion of the site.

Waiver 2: The waiver does not generate any adverse impacts related to adjacent properties; however, the Applicant will sufficiently screen and buffer the property.

f. Economic issues may not be used to justify waivers.

Waivers 1 & 2: Economic issues are not used as a justification for these requests.

g. The request is compatible with existing and potential land uses adjacent to the development site.

Waivers 1 & 2: These requests are consistent with the existing and potential land uses adjacent to the development site. The surrounding uses to the north and west are residential communities. The request of a decreased drive aisle and decreased minimum lot area will not jeopardize the subject site's compatibility with the adjacent uses.

Staff supports the applicant's request based on the intent of the applicant to maximize the utilization of the land reducing the amount of impervious surface and consistency with the Village Comprehensive Plan allowing for innovative designs. Although the acreage is below the minimum required for 42 residential dwelling units, the property can still be developed in the proposed manner without major any adverse impact to the surrounding properties.

Staff has concerns about congestion issues due to high pedestrian traffic during the neighboring school's entry and dismissal. Palm Beach County added a second pedestrian crossing on Kirk Road crossing north of the main intersection on Kirk and Forest Hill to prevent jaywalking and alleviate crowding in the corner crossings. However, the end of the new crosswalk is too close to the driveway access to Dollar General. As a result, students crossing the street walk directly into traffic turning left into Kirk since the lack of distance does not allow stacking. We believe the county could have adverted this issue if the crosswalk were offset a few feet further north away from the driveway access.

Staff have the following recommendation in reference to these concerns:

- *Village and School District Staff recommends that payment of the monetary contribution requested by Palm Beach County School District, be required prior to permitting. Said funds shall be escrowed by the District and earmarked as a contribution to a future pedestrian-oriented traffic signal, pursuant to Palm Beach County specifications, at the mid-block crossing from Palm Springs Middle School to the west side of Kirk Road.*
- *Staff recommends designating the right exit lane, from the new community, a turn-right-only lane during school zone hours to reduce traffic conflicts during peak traffic hours.*

IV. Neighborhood Compatibility

1) The proposed project is located on the west side of Kirk Road between Forest Hill Blvd and LWDD Canal L-7.
2) Surrounding properties to the north and west are mostly single family and multi-family residential dwellings.
3) A mix of different retail and professional services like general retail, restaurants, schools, and professional offices are located to the south and southwest within walking distance along Kirk Rd and Forest Hill Blvd.
4) The site is located about 1.05 miles northwest From Village Hall.
5) Palm Springs Middle School is located east across the street. The Summit Blvd branch of the Palm Beach County Library and the Palm Beach School District Fulton Holland Educational Services Center are other major sites located within a mile of the site.
6) Public transportation is available through Palm Tran bus stops along Kirk Road via route 60 and Forest Hill Blvd via route 46.

V. Regulatory Issues

- The site plan generally conforms to the property development standards of a Residential Planned Development.
  1) Proposed project plan generally meets required site development regulations.
  2) The applicant is responsible to acquire all applicable permits from all regulatory agencies with jurisdiction over the project site, including but not limited to Palm Beach County, Lake Worth Drainage District, and the Village of Palm Springs.
  3) Civil/Utility plans shall be approved by the Village's Engineer.
  4) The proposed development is located within the Airport Regulated areas Zone 1 and Zone 3 for Palm Beach International Airport.
  5) Proposed Site Plan meets the Traffic Performance Standards of Palm Beach County.
  6) A negative impact on the School District of Palm Beach County public school system is expected with the proposed development.

VI. Environmental Issues:

There are no environmental (wetlands, floodplains, etc.) issues identified.

VII. Community Outreach/Notification

- The subject property was posted on January 28, 2022.
- Public Notification letters were mailed to all property owners within 300 feet radius of subject property on January 26, 2022.
- Legal advertisement was published in the paper on February 3, 2022 and will be re-advertised on March 31, 2022.
- Staff has not received any inquiries or comments because of the notices.

VIII. Proposed Development Plan Details

The petitioner's development plans received on April 23, 2021, depicts the following:

- Application for Residential Planned Development Site Plan approval with two (2) waivers for the construction of 50 two-story fee-simple townhomes within 9 buildings.
  1. Site Plan received on April 29, 2021. Last revised and resubmitted on May 13, 2022.
  2. Landscape plans received on April 29, 2021. Last revised and resubmitted on May 13, 2022.
  3. Engineering plan received on April 29, 2021. Last revised and resubmitted on May 13, 2022.
  4. Architectural plans received April 29, 2021 and May 13, 2022.
  5. Photometric plan received April 29, 2021. Revised and resubmitted on January 13, 2022.
  6. Boundary and topographic survey received April 29, 2021.
  7. Traffic study dated April 23, 2021 and received April 29, 2021. Revised October 20, 2021 and received November 5, 2021.
  8. Project narrative and Justification Statement of proposed use received April 29, 2021. Revised and resubmitted on May 13, 2022.
  9. Drainage Statement dated April 22, 2021 and received May 13, 2022.
  10. Conceptual Drainage Plan received April 29, 2021. Revised and resubmitted on January 13, 2022.

IX. Recommendation

The applicant is proposing the development of the 5.07-acre parcel with the construction of 42 two-story fee-simple townhomes within seven buildings.

The townhomes will be three-bedroom homes with a one car garage and a driveway with space for one or two cars. The buildings will be configured with seven (7) six-townhome structures. The community will have one access driveway via the existing Kirk Road right-of-way on the northern segment of the property and only emergency access is proposed thru the southern drive aisle. Amenities include a tot lot, a shade structure with picnic tables, and a recreational open space.

Planning, Zoning & Building Staff has conducted a review of the application and found the proposed Residential Planned Development Site Plan to be consistent with goal, objectives, and policies of the Village's Comprehensive Plan. The proposed project is generally consistent with the Land Development and zoning regulations and all other portions of the code. However, staff has concerns about congestion issues due to high pedestrian traffic during the neighboring school's entry and dismissal.

The proposed residential project provides internal sidewalk connections between the common amenities (tot lot, picnic area) and the buildings to facilitate pedestrian circulation and safety. The proposed project provides open spaces creating common areas for passive/leisure activities. The proposed use does not significantly reduce light and air on adjacent properties and would not be a deterrent to surrounding properties. The new project does not negatively impact natural systems.

In addition, the project exceeds some of the minimum requirements for a Planned Development as shown on the following table:

Land Development Regulations	Required	Proposed
35 percent of the gross land area for open space	77,101 SF. (1.77 acres)	111,949 SF. (2.57 acres) (51%)
40% maximum building coverage	88,340 S.F.	15% (39,752 S.F.)
2.5 Vehicle Parking Spaces per Dwelling Unit + 25 percent allocation for Guest Parking	132 Spaces	141 Spaces

PZ&B Staff recommends conditional approval of the Residential Planned Development Site Plan with two (2) waivers, for the construction of 42 fee-simple townhomes within seven (7) buildings subject to the following forty-three (43) conditions below and a suggestion for a voluntary monetary contribution, requested by the School District to mitigate school impacts:

1. Build out date December 31, 2024.
2. The Final Plat shall be approved and recorded **prior to the issuance of any building permit**.
3. The common amenities shall be completed in their entirety, open for use and accessible to the residents, **prior to the issuance of the 16th Certificate of Occupancy** (40% of the project)
4. An opaque fence shall be provided around the lift station supplemented with landscaping and details shall be provided **at time of permitting**.
5. Village and School District Staff recommends that payment of the monetary contribution requested by Palm Beach County School District, be required **prior to permitting**. Said funds shall be escrowed by the District and earmarked as a contribution to a future pedestrian-oriented traffic signal, pursuant to Palm Beach County specifications, at the mid-block crossing from Palm Springs Middle School to the west side of Kirk Road.
6. Staff recommends designating the right exit lane, from the new community, a turn-right-only lane during school zone hours to reduce traffic conflicts during peak traffic hours (8:00 – 9:00 am and 3:00pm – 4:30 pm).
7. A Utility/Civil Plan shall be approved by the Village Engineer and Palm Beach County Utilities **at time of permitting.**
8. Details of the proposed black aluminum fence shall be provided to the PZB Department and shall be approved by the PZB Director **at time of permitting.**
9. Garages shall be used for parking only. The HOA covenants/ deed restrictions shall prohibit the conversion of garages into habitable spaces or used as storage.
10. The HOA covenants/ deed restrictions shall prohibit the installation of sheds, the parking of boats, commercial vehicles, or recreational vehicles anywhere inside the property. Parking of oversized vehicles that do not fit within the typical parking stall (9'x18.5') shall also be prohibited.

11. The legal instruments providing parking restrictions, shall be reviewed and approved by the Village Attorney and PZB Director **prior to issuance of the first building permit**.
12. Only one or two vehicles respectively shall be parked in the driveways overnight and shall not be permitted to park on or block any sidewalk or drive isles.
13. No parking shall be allowed, under any circumstances, along the drive aisle. Residents and guest parking shall only occur within designated parking stalls, private driveways and private garages.
14. The HOA shall be responsible for all landscape maintenance, including, but not limited to, mowing of private yards and trimming the trees around the entire perimeter.
15. The construction dumpster shall be only provided by Waste Pro USA who is under franchise Agreement with the Village.
16. Conditions of approval stated in Village Engineer's letter (Chen Moore and Associates) shall be satisfied **at time of Civil/Utility application review**.
17. Any existing or proposed utility box/cabinet shall be screened from view, Staff recommends wrapping the cabinets/box with a match design accordingly with the existing/proposed location.
18. Any existing or proposed utility easement shall not overlap more than 5' the landscape buffer.
19. The property owner shall post a notice of annual boundary school assignments for students from this development. The district will provide an 11' x 17' sign to be posted in a clear and visible location in all sales offices and models with the following:

    "NOTICE TO HOMEBUYERS/TENANTS"

    "school age children may not be assigned to the public school closest to their residences. School Board policies regarding overcrowding or other boundary policy decisions affect school boundaries. Please contact the Palm Beach School District Boundary Office at (561) 434-8100 for the most current school assignment(s)".
20. Photometric plans shall be approved by the Planning, Zoning and Building Department **at time of permitting**.
21. Landscaped areas shall be irrigated including but not limited to buffer, islands, planter boxes, etc.
22. The mail pickup and delivery system shall be approved by the United States Postal Service.
23. Irrigation plans shall be provided **at the time of permitting**. Non-potable water shall be used for the irrigation system per Village code.
24. Provide permits from all applicable permitting agencies, including but not limited to, Lake Worth Drainage District, Palm Beach County Water Utilities Department, Palm Beach County Roadway Production Division, and the Village of Palm Springs **at the time of permitting**.
25. The property owner shall register an Agent of Record, prior to issuance of a permit, to establish a contact person responsible for compliance with this Development Order, including site plan/landscape plan details and conditions of approval.
26. A copy of the NPDES Notice of Intent for Generic Permit shall be submitted to the PZB Department at time of permitting.
27. A stabilized surface shall be provided at all times during construction for access by emergency vehicles.
28. All mechanical equipment's and above-ground infrastructure shall be screened from view.
29. The Applicant may be required to undertake additional security measures, based on the number of complaints or calls for service for incidents at the premises, as determined by the Police Chief. Such additional security measures, as approved by the Police Chief, may include increased on-site security at the operator's sole expense.
30. Verify utility and easement locations to ensure that there are no conflicts with landscaping, revise **at time of permitting** as needed.
31. All electric utilities shall be underground.
32. A pre-construction meeting shall be scheduled with the Village Planning, Zoning & Building Development Department prior to commencement of any construction activity. Permits are required from the Planning, Zoning & Building Department prior to commencing any construction or renovation. The project shall be constructed in accordance with the FBC edition in effect **at the time of permitting**.
33. A silt barrier shall be installed around the perimeter of the property (within the affected area for the site improvements and new building construction) prior to commencement of any site work or construction activity, and a track pad shall be installed at the construction entrance(s), both of which shall remain through substantial completion.
34. Any sidewalk broken or damaged during construction shall be replaced by the contractor **prior to CO**.
35. The Landscaping shall be certified by the Landscape Architect upon completion and **prior to Certificate of**

Occupancy/Certificate of Completion of each improvement area.

36. Absolutely no occupancy, other than construction personnel, is permitted **prior to TCO/CO**.
37. Photometrics must be certified by an engineer **prior to CO**.
38. The civil engineer of record shall certify the site construction **prior to Certificate of Occupancy**.
39. The applicant may be required to provide a resident inspector for structural elements such as concrete pours in accordance with Section 109.1.3 FBC 2010 and F.S. 553.791. Determination shall be made at time of pre-construction conference with Planning Zoning and Building Director.
40. The General Contractor shall be on site during all construction activity in accordance with FS 489.1195.
41. The project shall receive approval from all Authorities Having Jurisdiction and submit copies of approvals to the Village of Palm Springs.
42. **At the time of CO**, the petitioner shall provide the Planning, Zoning and Building Department with electronic copies of as-builts.
43. An updated School Capacity Availability Determination letter from the School District of Palm Beach County reflecting 42 residential units shall be provided **prior to permitting**.

44. The School District has requested the Applicant offer a voluntary commitment to make a contribution of $54,888.00 to the School District of Palm Beach County prior to issuance of a building permit, based on School Capacity Availability Determination letter issued on June 23, 2021.

JUSTIFICATION STATEMENT
FLU Map Amendment | Site Plan (Planned Development)
Belmont
Initial Submittal: April 22, 2021
Revised: June 11, 2021; August 20, 2021; December 15, 2021;
April 22, 2022; May 13, 2022

REQUEST

On behalf of D.R. Horton, Inc., the Applicant, WGI is requesting approval of the following:

1) **Future Land Use Map Amendment** from the Other Public Facilities Future Land Use designation to the Medium Density Residential Future Land Use designation.
2) **Site Plan (Planned Development)** to allow a 42-unit fee-simple townhome residential planned development.
   - **Waivers** from the following development standards allowed as part of Planned Development Performance Standards:
     i. Drive aisle width adjacent to 90-degree parking.
     ii. Minimum Lot Area

SITE CHARACTERISTICS

The 5.07-acre subject site, known as "Belmont", is located approximately 600 feet north of the Kirk Road and Forest Hill Boulevard intersection on the west side of Kirk Road. It is identified by Parcel Control Number (PCN) 70-42-44-12-39-000-0020 and has an existing address of 1591 Kirk Road. The subject site is under the jurisdiction of the Village of Palm Springs and has a Future Land Use (FLU) Designation of Other Public Facilities (UI) and is within the Residential Multiple Family (RM) Zoning district. The subject site is not within any of the Village of Palm Spring's overlay districts or within the Community Redevelopment Agency (CRA) district boundary. The subject site is currently being utilized as a Place of Worship use, with four buildings and its associated site elements. A large portion of the subject site is heavily vegetated. A map has been provided below which identifies the subject site's location within the Village, as well as an adjacent parcel's view which provides greater detail regarding the site characteristics and surrounding areas.

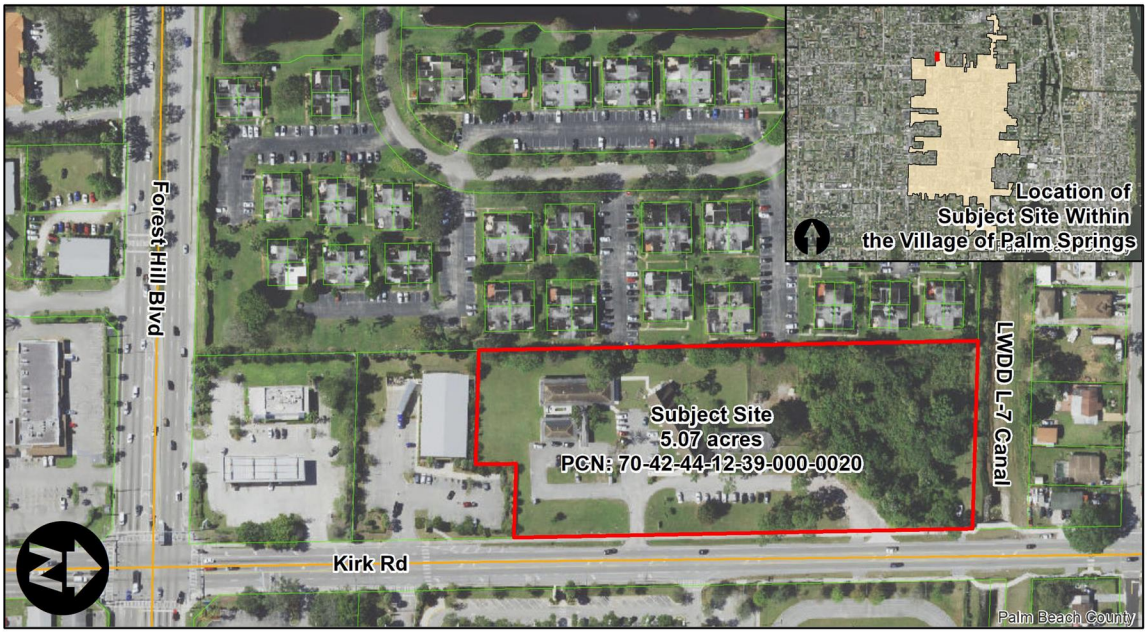

SURROUNDING PROPERTIES

The site is surrounded by a mix of uses, including a school, multifamily residential, single-family residential, and general retail. The mix of surrounding residential uses adjacent to the subject site can generally be found to be consistent with the proposed development. A summary of the surrounding property information has been provided below.

	FLU Designation	Zoning District	Existing Use
North	Medium Density Residential, 5 Units Per Acre (MR-5) (Unincorporated)	Multi-family Residential, Medium Density (RM) (Unincorporated)	Canal & Single-Family Residential
South	Commercial	General Commercial	Retail
East	Education	Governmental	Middle School
West	High Density Residential, 8 Units Per Acre (HR-8) (Unincorporated)	Multi-family Residential, Medium Density (RM) (Unincorporated)	Multi-Family Residential

North: Immediately north of the subject site is the Lake Worth Drainage District (LWDD) L-7 Canal. The L-7 Canal Right-Of-Way (ROW) provides 85 feet of separation from a single-family residential community further north on the other side of the canal. This community is within unincorporated Palm Beach County and retains a FLU designation of MR-5 and zoning district of RM.

South: South of the subject site is a Dollar General convenience store. The property is identified by a FLU designation of Commercial and is within the General Commercial zoning district.

East: To the east of the subject site is the Palm Springs Community Middle School. The property is identified by an Education FLU designation and is within the Governmental zoning district.

West: West of the subject site is the Forest Lakes community. This multi-family residential community is comprised of quadplexes, approximating 228 dwelling units. This community is within unincorporated Palm Beach County and retains a FLU designation of High Density Residential, 8 units per Acre and is within the multi-family residential zoning district.

DEVELOPMENT HISTORY

As previously mentioned, the subject site currently accommodates a Place of Worship, known as Lutheran Church of the Holy Cross. This church was initially approved by Palm Beach County in the late 1960s and has been in operation since. The subject site was voluntarily annexed into the Village of Palm Springs in 2006 under Ordinance Number 2006-13. No other development approvals since the subject site's annexation into the Village have taken place.

DEVELOPMENT PROGRAM

The following outlines the development program for the proposed 42-unit multi-family residential townhouse development:

Density

Pursuant to Section 34-761, the maximum density for the RM zoning district is 19 DU/AC. The proposed 42 townhouse development on the 5.07-acre site will yield a density of 8.28 DU/AC, and is consistent with the district's density regulations.

Building Height

Pursuant to Section 34-1064, the maximum height for a building within the residential planned development district shall be the same as allowed in the applicable land development district, or 35 feet, whichever is higher. The proposed RM zoning district and residential planned development height regulation remain consistent with one another, as three stories or 35 feet. The subject site is in compliance with this requirement as the proposed buildings are two stories with a 20' maximum height to Top of Beam (TOB).

Minimum Acreage Requirement
Pursuant to Section 34-1064(c), all Residential Planned Developments shall be no less than three acres. The subject site is compliant with this requirement as it is 5.07 acres in size. However, it should be noted that per Section 34-766(1), the RM zoning district requires a Minimum Lot Area regulation based on dwelling units, which would require the subject site to be 8.85 acres [15,000 SF for three dwelling units & 9,500 SF for each unit thereafter (42) = 385,500 SF or 8.85 acres].

Open Space and Common Amenity Area
Pursuant to Section 34-1064(d), a residential planned development is required to provide a minimum amount of open space and common amenity area. The minimum total open space requirement for residential planned developments shall be 35 percent of the gross land area, of which 20 percent shall be common amenity area. Based on the standard for required open space, the 5.07-acre subject site is required to provide 1.77 acres of open space. The subject site currently exceeds the code requirement for open space as 2.57 acres or 51 percent of the gross land are proposed to remain as open space. Of the 1.77-acre open space requirement, at least 20 percent of this area must be provided as a common amenity area to all lots such as parks, playgrounds, or other recreational purposes. Based on the open space land area requirement of 1.77 acres the subject site is required to provide 0.35 acres of common amenity area for the proposed community. This requirement is exceeded, as 0.48 acres of common amenity area is proposed central to the community. This amenity area accommodates a tot lot, shade structure, picnic tables and open lawn area.

Lot Coverage
Pursuant to Sec. 34-1064(e)(2), all structures within a Residential Planned Developments shall have a maximum lot coverage of 40%, based on the net area of individual lots. The development proposal is compliant with this requirement as none of the proposed lots exceed 40% lot coverage.

Access
The subject site has frontage along Kirk Road. The proposed site plan provides ingress/egress to the site from a Kirk Road access point at the northern portion of the property. An emergency only stabilized access point to Kirk Road is provided at the southern portion of the subject site.

Buffering
Pursuant to Village Code Article III, Section 34-162.-Required Landscaping, in certain situations the Village requires landscaping around the perimeter of development parcels to create a buffer from adjoining land uses, streets and properties. The subject site is in compliance with this section of the Village's code as there is a landscape buffer provided around the entirety of the subject site. The proposed perimeter buffer varies in width from five feet to 15 feet.

North - A Category 6, 10-foot-wide landscape buffer is required along the northern property line. Pursuant to Section 34-162 – Required buffers, planting for Category 6 requires a hedge not less than three feet in height, with trees, spaced not more than 20 feet apart. The hedge shall be a minimum of three feet in height at time of planting. The required hedge shall be a minimum of two different maintained levels or tiers, and shall be installed in a non-linear (meandering) manner.

South - A five-foot-wide landscape buffer with a six-foot high opaque fence is being proposed along the southern property line. It should be noted that the retail use has an existing buffer and an opaque fence. Combined with the proposed 0.23-acre dry detention area and proposed landscape buffer, increased separation and screening for the proposed residential development will be provided.

East - A 15-foot-wide landscape buffer is proposed along the eastern boundary to provide screening of the subject site from the traffic associated with Kirk Road. The buffer will include a six-foot high aluminum fence and planting on both sides of the fence.

West - Although the property to the west of the subject site consists of a compatible multi-family residential community, a 10-foot-wide landscape buffer is being proposed with a six-foot high opaque fence to maximize screening and privacy between the adjacent existing residential units and the proposed units on the subject site.

Waivers
As provided in Subdivision IX.-Planned Developments, the proposed residential planned development is subject to greater flexibility in design and development standards relative to specific dimensional regulations, in order to encourage ingenuity and originality in subdivision and site design while preserving open space to serve recreational, scenic and other public services. Therefore, this Subdivision of the Village's code allows for waivers from certain criteria. The waivers requested for the subject site relate to drive-aisle width and the minimum lot area. The waiver details of the aforementioned requirements can be found within the subject site's *Conformance with Planned Development Code* section of this Justification Statement.

FUTURE LAND USE MAP AMENDMENT

This Justification Statement for the Future Land Use Map (FLUM) Amendment is provided to demonstrate that the proposed FLUM change is consistent and in compliance with the applicable Objectives and Policies of the Village's Comprehensive Plan, as follows.

Policy A.2

Encourage the development of planned developments (townhouse, zero lot line) projects as an alternative single family living style to accommodate the demand and to preserve the character of the Village, and incorporate regulations into the Village of Palm Springs' Comprehensive Zoning Ordinance.

Applicant's Response:

The proposed townhouse planned development will fulfill this policy as it will serve as a housing alternative to single family homes and will provide more affordable housing opportunities in the community. There is also a companion Site Plan application of which compliance with the Zoning ordinance will be demonstrated.

Policy A.3

Promote the location of multi-family residential development in areas with direct access to collector or arterial streets. The location of multi-family residential development shall be consistent with the high and medium density residential areas established on the Future land Use Map.

Applicant's Response:

The subject site is located approximately 600 feet north of the Kirk Road and Forest Hill Boulevard intersection on the west side of Kirk Road. The proposed access for the townhouse planned development is from Kirk Road, which is classified as an arterial street. As previously mentioned within the Surrounding Properties section of this Justification Statement, the subject site is surrounded by compatible residential uses to the north and west.

Objective F – Level of Service

Meet Level of Service standards for all public facilities and services facilitated by proposed future land uses at the time of, and concurrent with, land development and/or redevelopment of areas in Palm Springs.

Applicant's Response:

The proposed development will meet the required level of service standards, and the proposed concurrency for 42 townhouse units will be reviewed at the Site Plan Review process. See **II.** - **Justification Statement of Site Plan Review** of this document.

Policy G.2 – Density Analysis

Land Development standards for residential land use densities shall be as follows:
Low density residential – 0.1 to 5.80 residential units per gross acre; and
Medium density residential – 5.81 to 10.0 residential units per gross acre; and
High density residential – 10.01 to 19.0 residential units per gross acre.

Applicant's Response:

The proposed request to redesignate the subject site to Medium Density Residential FLU, will allow the development of the site at a density ranging from 5.81 to 10.00 units per gross acre. The applicant is requesting for 42 units which will result in a gross density of 8.28 du/ac.

Policy I.1 – Co-ordination with Other Agencies

As part of the site plan review process, coordinate requests for development orders, permits or project proposals, as appropriate, with adjacent municipalities, Metropolitan Planning Organization, Palm Beach County, Treasure Coast Regional Planning Council, Special Districts, South Florida Water Management District, and State and Federal Agencies.

Applicant's Response:

As part of the companion application, Site Plan review process, the applicant is submitting a Traffic Study prepared by JFO Group Inc., of which the Study indicated the coordination with Palm Beach County Traffic Division and explained how the request will be in compliance with Article 12 of the Unified Land Development Code on the Traffic Performance Standards as part of its traffic impact analysis.

Policy K.1 – Adequate Public Facilities

All land uses that have been developed or approved for development within the Village must be adequately served by existing public utilities and services before the Village may approve any new development, redevelopment, or annexations that would require use of these utilities and services. These utilities and services shall include the following for which the Village has set a Level of Service Standard, including: Water facilities; Sewer facilities; Drainage Facilities; Roadways; and Recreational facilities.

Applicant's Response:

Under these applications, the following documents have been submitted to demonstrate compliance with this Policy: Water facilities: Please see correspondence provided by Palm Beach County Water Utilities District stating that adequate potable water supply and sewage collection and treatment capacities are available to serve the proposed development. Sewer facilities: Please see correspondence provided by Palm Beach County Water Utilities District stating that adequate potable water supply and sewage collection and treatment capacities are available to serve the proposed development.

Drainage facilities: See Drainage Study prepared by Michael B. Schorah and Associates, Inc.

Roadways: See Traffic Study prepared by JFO Group Inc.

Recreational facilities: See Site Plan dated May 13, 2022 which shows 0.48-acre of on-site recreational amenities are provided for the residents.

Objective M - School

The Village shall continue to coordinate with Palm Beach County School Board on the location of new schools within land uses designated as Educational and Medium Density Residential.

Applicant's Response:

The School Capacity Availability Determination (SCAD) Letter was provided to the applicant and has been provided as part of this application, as required.

CONFORMANCE WITH PLANNED DEVELOPMENT CODE

As required by the Village's Development Application, demonstration must be provided that the proposed residential planned development is in conformance with the Planned Development Code Objectives and Performance Standards provided in Subdivision IX of the Village's Code. An outline of how the project conforms with standards has been provided below.

SEC. 41-1062 OBJECTIVES

The development proposal conforms with the Objectives for a Planned Development as outlined below.

1. ***To permit the creation of functional and unique residential, commercial and mixed-use developments that do not adversely impact the village's character and "small town feel".***

   Response: The proposed residential planned development is in conformance with this objective as the requested residential density of 8.28 DU/AC is not out of character for the surrounding area. The site is located in close proximity to many commercial services which will provide immediate service to future residents and create a functional balance between non-residential and residential uses. Furthermore, it is compatible with the surrounding residential land use designations to the west and north. Therefore, by allowing for the approval of the proposed 42 dwelling unit townhouse development, the Village's "Small Town Feel" will not be adversely impacted.

2. ***To promote building siting that takes into consideration the context of the development, the location of nearby uses, and the new development's compatibility with existing neighborhoods.***

Response: The site planning of the subject site took great consideration into the context of the development with the surrounding areas. Townhouses are a great transition between the commercial uses to the south and the single-family residential uses to the north. Furthermore, it is consistent with the adjacent multi-family residential use to the west. Regarding site design, the subject site's required dry detention areas have been located adjacent to the areas with greater chances of incompatibility along the east and south. Most of the townhouses proposed along the east are separated from Kirk Road by the 0.44-acre dry detention area, which is in addition to a 15' landscape buffer. The 0.22-acre dry detention area at the south of the property provides great separation of the proposed townhouses from the adjacent commercial uses.

3. ***To enhance landscaped open space and streetscapes.***

Response: The development proposal is consistent with the aforementioned objective as the open space and streetscape areas of the subject site will be enhance with landscaping, consistent with the Village's landscape requirements. Furthermore, areas of the development exceed the code requirements. No buffer is required along the south property line, however, a 5' wide buffer is proposed to ensure adequate screening is provided.

4. ***To bring unique and creative solutions to new development, the following elements should be considered in the context of the specific site, project and/or use:***

   a) Arrangement and spacing of buildings and open spaces;
   b) Ability to aggregate adjacent lots or parcels, and/or eliminate nonconformities;
   c) Location of access drive and sidewalks to promote circulation and access;
   d) Building coverage;
   e) Sufficient and convenient parking for uses and activities;
   f) Landscape buffers and screening mechanisms to enhance aesthetics and promote compatibility
   g) Adequate lighting for security and pedestrian/vehicular safety; and
   h) Development of large employment centers predominately of light industrial or high technology uses in underutilized corridors. The flexibility of design should promote revitalization of the primary commercial areas and an economic stimulus through job creation to the local economy as well.

Response: The development proposal brings unique and creative solutions to new development, by remaining consistent with the aforementioned subobjectives. As previously mentioned, great consideration was given during the site planning of the subject site. The arrangement and spacing of buildings relative to open spaces was considered heavily to remain consistent with requirements such as the common amenity area requirements and to provide a better quality of living for future residents. The pedestrian and vehicular circulation programs were designed specifically to promote safety for future residents. Each subobjective was weighed heavily as they relate to the specific subject site.

SEC. 34-1063 PERFORMANCE STANDARDS

The development proposal conforms with the performance standards for a Planned Development as outlined below.

Standards:

1. ***Sidewalks on both sides of a street or primary driveway, interconnected with other pedestrian-ways and/or providing access to each building.***

   Response: The development proposal is consistent with this performance standard as sidewalks are proposed on both sides of the proposed streets. Access is provided to each townhouse unit from the proposed sidewalk network. The sidewalk provides connection to Kirk Road to ensure the community is interconnected with the rest of the Village.

2. ***Consolidation of smaller parcels into a larger, unified development project.***

   Response: This is not applicable, as the subject site is one 5.07-acre parcel.

3. ***Consolidation of driveways to eliminate curb cuts, with reciprocal easements for access; provision of access from secondary streets and alleys.***

   Response: The consolidation of driveways has been provided as evidenced within the provided site plan. Access from secondary streets and alleys is not appropriate for the subject site as Townhouse units are proposed, and the size of the subject site does not allow for the use of alleys and secondary streets.

4. ***Shared parking arrangements to reduce impervious surfaces and promote efficient* use *of facilities.***

   Response: As required by the Village's Parking Code, the subject site provides guest parking accommodations throughout the subject site. These guest parking locations were intentionally planned to be central to the entire development to promote efficient use by lots. Furthermore, this consideration allows for reduced impervious area as guest parking is not over abundant and throughout all areas of the subject site.

5. ***Provision of sufficient parking to avoid on-street parking, unless designed with on-street spaces.***

   Response: The subject site retains sufficient parking for the residential units per the Village's Code requirement of 2.5 spaces per unit. Parking spaces are provided for guest parking spaces as required by Village Code; the total parking provided exceeds the requirement and is distributed throughout the development.

6. ***Pedestrian-scale street lighting along sidewalks and pedestrian ways.***

   Response: Street lighting will be provided along sidewalks and pedestrian-ways to create an appropriate pedestrian scale environment.

7. ***Aggregation of open space to create common areas of sufficient size for passive/leisure activities.***

   Response: The required 0.35-acre community amenity area (0.48-acre amenity area proposed) is proposed to remain as one whole area located central to the development. By aggregating the amenity area into one tract rather than multiple smaller tracts throughout the subject site, the land will sufficiently be used for active and passive/leisure activities.

8. ***Continuity of sidewalks and pathways where disconnects occur; and provision of sidewalks to usable open spaces, recreation amenities or public facilities.***

Response: As previously mentioned, crosswalks will be provided throughout the subject site to provide continuity of sidewalks and pathways where disconnects occur. The subject site has an extensive pedestrian circulation pattern which allows uninterrupted circulation from usable open spaces, recreation amenities, public facilities, and individual lots.

9. ***Residential setbacks that allow for a green, semi-private planting area between the sidewalk and house(s).***

Response: The provided setbacks are proposed to allow for a green, semi-private planting area between the sidewalk and houses. Appropriate foundation planting has been planned to be incorporated into the individual lots.

10. ***Promote streetscape where feasible, with maintenance agreements assigning responsibility to adjacent properties.***

Response: Streetscape is promoted throughout the subject site where feasible. This will be achieved through the use of pedestrian scale lighting, as previously mentioned, and by proposing appropriate landscaping to provide adequate streetscape. Maintenance agreements will be assigned through the use of HOA documents.

11. ***Create bus waiting areas for safety, for school buses or mass transit, as may be applicable.***

Response: As coordinated with Palm Beach County School Board, a 10'x15' school bus shelter has been provided at the main entrance of the community.

12. ***Building stepbacks or setbacks to respect existing scale and massing of adjacent neighborhoods and promote compatibility.***

Response: As aforementioned, the site was planned to provide the greatest amount of separation as possible from the most incompatible adjacent uses to the south and east. Much of the structures are massed closer to the northern and western boundary as the adjacent uses and structures are more compatible with the proposed townhouse structures.

13. ***Provision of original, self-confident building design, and prohibition of metal buildings.***

Response: Metal buildings are not proposed as part of this development proposal. Original, self-confident building design is provided as the townhouse buildings are proposed to be contemporary modern.

14. ***Buffers between differing uses to include a masonry wall and landscaping to promote compatibility.***

Response: As depicted in the site photos provided with this submittal, a vinyl fence currently exists along the adjacent commercial property line to the south of the subject site. This fence is proposed to remain as is to provide further screening from the retail use and to promote compatibility. As previously mentioned, a perimeter landscape buffer is proposed in conjunction with the neighboring retail landscape buffer to provide the utmost screening.

15. ***Adequate vehicular circulation, traffic maintenance and/or operational measures that does not negatively impact existing roadway conditions, including avoidance of dead-end streets and t-style turnarounds.***

Response: The proposed development consists of three streets which will provide adequate vehicular circulation that will not negatively impact existing roadway conditions. While there are dead-end streets proposed, there is adequate room for vehicles to maneuver, and based on the proposed townhouse use these dead ends are not anticipated to have any negative impacts.

WAIVERS

Pursuant to the Planned Development Performance standards of the Village's Code, the Applicant may utilize waivers to promote the use of innovative and creative techniques and concepts. As previously mentioned, waivers are requested for the development proposal to allow relief from certain requirements. The waivers requested have been outlined within the table below and meet the waiver criteria as identified within this *Waivers* section.

Waiver	Subject	Code Section	Required	Proposed	Deviation
1.	Street width adjacent to 90-degree parking	Sec. 34-1328	26' wide drive aisle when adjacent to parking	20' wide drive aisle when adjacent to parking	-6'
2.	Min. Lot Area	Sec. 34-766(1)	385,500 SF / 8.85 AC.	220,849 SF / 5.07 AC.	-164,651 SF / -3.78 AC.

1. ***The request is in harmony with and is consistent with the purpose and intent of the Village's Comprehensive Plan and* Land *Development Code and that such waiver will not be injurious to the area involved or otherwise detrimental to the public health, safety, and welfare.***

Waiver 1 Response: It is important to note that each driveway is designed with a proposed depth of 20 feet, which is longer by 2 feet from a standard 90-degree angle parking space.

The internal road has a 20-foot asphalt pavement, a 4-foot paver strip and a 2-foot curb/gutter along both sides of the road totaling 28 feet in width. Therefore, when comparing the internal road with townhouse units/driveways located on both sides of the street to a two-way drive aisle of a parking lot, with 90-degree angle parking spaces on both sides of the drive aisle, the proposed dimension measures 68 feet versus 62 feet as required for the parking lot.

The second scenario is where the proposed townhouse units/driveways abut an internal street with parking spaces located on the other side of the street. The proposed dimension of the internal street is 28 feet, and exceeds the drive aisle dimension of 26 feet.

It is important to note that Section 34-1328 has a conflict between the dimensions for the aisle width for a 90-degree parking lot, the Table of 34-1328 indicated a 27-foot aisle width whereas the graphic for the 90- degree angle parking layout shows 26 feet aisle width is required, after consultation with Village Staff, the latter dimension is confirmed to be correct. Therefore, the request is to reduce the aisle width from 26 feet to 20 feet for those areas where 90-degree angle parking are located.

In addition to the proposed signage on speed limit; installation of speed tables and striping of crosswalks will provide a safe and environment for the residents of this development.

Since the aisle width reduction is internal to the development, by granting this waiver, it will not be injurious or detrimental to the public health, safety and welfare.

Waiver 2 Response: The request to allow a reduced lot size from the required minimum lot requirements is outside of the Applicant's control and will not affect the public health safety, and welfare.

2. ***The request results from innovative design in which other minimum standards are exceeded.***

Waiver 1 Response: As mentioned in Criteria 1 above, the proposed townhouse planned development complies with the performance standards of a Residential Planned Development of Section 34-1063 – Performance Standards by:

a. providing sidewalks on both sides of the street; and will be interconnected with other pedestrian amenities and access to individual units;
b. utilizing existing curb cut to the Church, and improve the northern access point as the main ingress/egress for the townhouse development;
c. providing adequate parking for both residents and guests;
d. providing pedestrian scale street lighting along internal sidewalks;
e. providing amenities that are located in a central location of the development, and will be accessible by a safe pedestrian circulation system;
f. providing landscape buffers along the perimeter of the planned development to address any potential impact.

As such, by complying with those applicable planned development performance standards, of which these performance standards are examples of innovative design and can be used as a guideline for an applicant to follow. Therefore, the Applicant is providing an innovative design for the overall development, and with the additional traffic calming components such as defining parking areas with decorative pavement; speed limit signage and speed tables, the minimum design standards are exceeded.

Waiver 2 Response: The request to allow a reduced lot size is not the result of innovative design. The lot is predisposed to be smaller than the required minimum and is outside of the control of the applicant.

3. ***The request demonstrates that granting of the waiver will result in preservation of valuable natural resources, including drainage and recharge areas, natural areas, etc.***

Waiver 1 Response: The granting of the waiver request related to reduced drive aisle width will result a lesser impervious area, and will provide a more efficient drainage system for the proposed development.

Waiver 2 Response: The request to allow a reduced lot size will not result in preservation of valuable natural resources. The lot is predisposed to be smaller than the required minimum and is outside of the control of the applicant.

4. ***The request demonstrates public benefits to be derived, including but not limited to such benefits as dedication of rights-of-way, extensions of pedestrian linkages outside of the project boundaries, preservation of open areas and*** **use** ***of desirable architectural, building, and site design techniques.***

Waiver 1 Response: By allowing a narrower drive aisle adjacent to parking spaces, there is still sufficient area to provide safe vehicular maneuvering area and a sidewalk on both sides of the internal street, and therefore establishes a safe pedestrian circulation system that connects external to the public sidewalk along Kirk Road and Forest Hill Boulevard.

Waiver 2 Response: The request to allow a reduced lot size does not demonstrate public benefits to be derived. The lot is predisposed to be smaller than the required minimum and is outside of the control of the applicant.

5. ***The request provides sufficient screening and buffering to screen adjacent* uses *from adverse impacts caused by the granting of a waiver.***

   Waiver 1 Response: The request will not jeopardize the screening of the subject site as it relates to a decreased drive aisle width which is internal to the planned development, and only in a specific portion of the site.

   Waiver 2 Response: The waiver does not generate any adverse impacts related to adjacent properties, however, the Applicant will sufficiently screen and buffer the property.

6. ***Economic issues may not be* used *to justify waivers.***

   Response: Economic issues are not used as a justification for these requests.

7. ***The request is compatible with existing and potential* land uses *adjacent to the development site.***

   Response: These requests are consistent with the existing and potential land uses adjacent to the development site. The surrounding uses to the north and west are residential communities. The request of a decreased drive aisle and decreased minimum lot area will not jeopardize the subject site's compatibility with the adjacent uses.

8. ***Waiver requests from minimum common amenity area requirements shall further demonstrate that adequate recreation area is available in the immediate vicinity of the proposed development.***

   Response: This criterion is not applicable as a waiver is not requested from the common amenity area requirements. The development proposal provides adequate community amenity area.

9. ***Waiver requests from maximum height limitations shall further demonstrate that the additional height will not adversely impact adjacent properties and appropriate setbacks are provided as building height increases.***

   Response: This criterion is not applicable as a waiver is not requested from the height limitation requirements. The development proposal is currently under the maximum height threshold of three stories or 35 feet.

CONCLUSION

Based on the above justification and attached information, the petitioner respectfully requests approval of the Future Land Use Map Amendment, and Site Plan to allow a Residential Planned Development application for the subject site.

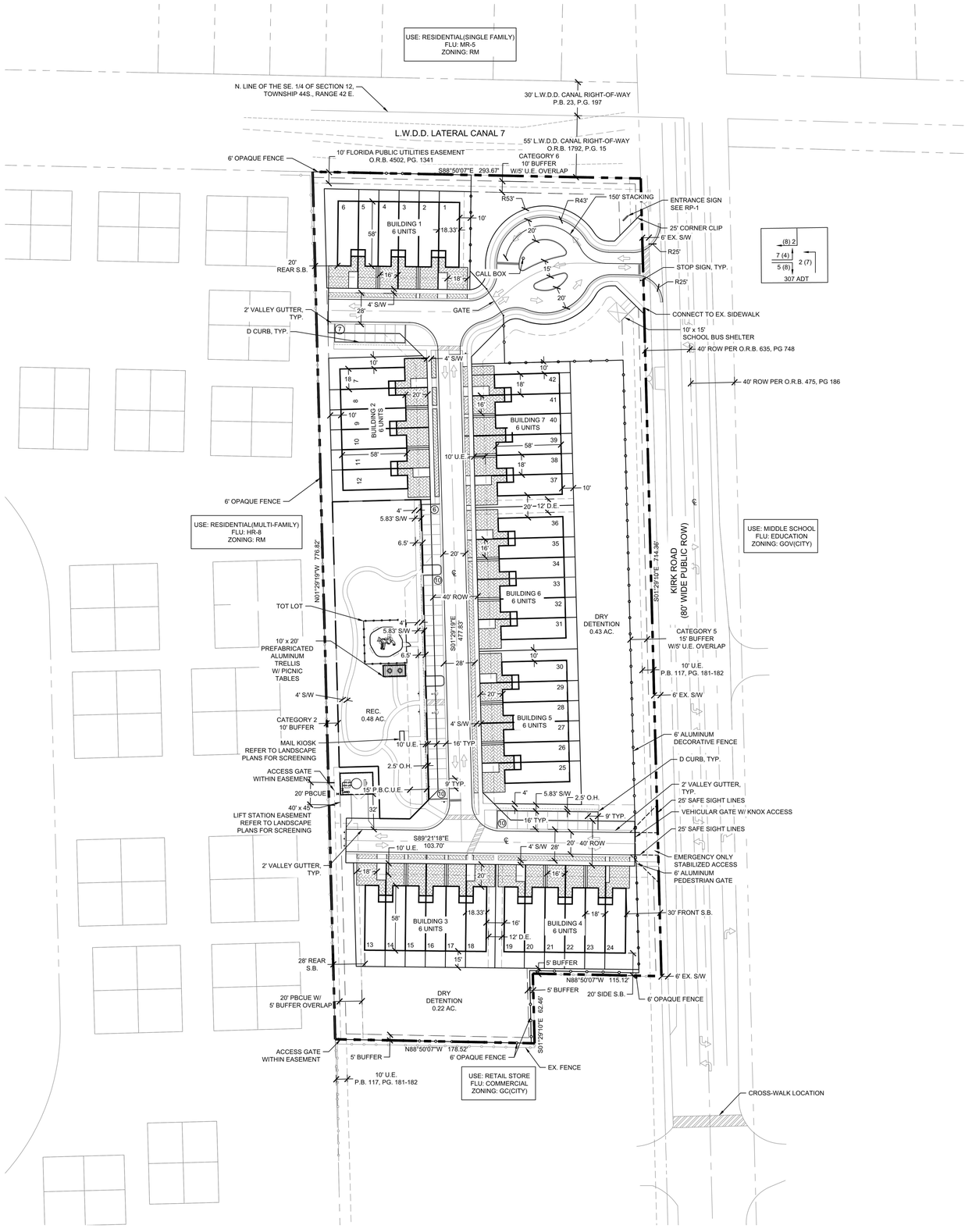

LOCATION MAP

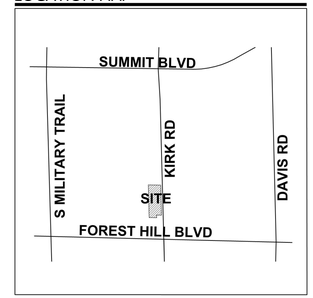

N

0 25 50 100

SCALE: 1" = 50'

SITE DATA

APPLICATION NAME	BELMONT
EXISTING LAND USE DESIGNATION (VILLAGE)	OTHER PUBLIC FACILITIES
PROPOSED LAND USE DESIGNATION (VILLAGE)	MEDIUM DENSITY RESIDENTIAL
EXISTING ZONING DISTRICT (VILLAGE)	RM
PROPOSED ZONING DISTRICT (VILLAGE)	RM/PUD
PCN	70-42-44-12-39-000-0020
EXISTING USE	CHURCH
PROPOSED USE	TOWNHOME RESIDENTIAL
GROSS SITE AREA	5.07 AC.
TOTAL PROPOSED UNITS (TOWNHOUSE)	42 D.U.
GROSS DENSITY	8.28 D.U./AC
OPEN SPACE REQUIRED	1.77 AC. (35%)
OPEN SPACE PROVIDED	2.57 AC. (51%)
PROPOSED PERVIOUS	2.67 AC. (53%)
PROPOSED IMPERVIOUS	2.40 AC. (47%)
COMMON AMENITY REQUIRED	0.35 AC.(20% OF OPEN SPACE)
COMMON AMENITY PROVIDED	0.48 AC.
DRY DETENTION AREA	0.65 AC. (13%)
TOTAL PARKING REQUIRED	132 SP.
RESIDENTIAL PARKING REQUIRED (2.5 SP./D.U.)	105 SP.
GUEST SPACES REQUIRED (25% OF REQ. SP.)	27 SP.
TOTAL PARKING PROVIDED	141 SP.
GARAGE SPACES	42 SP.
DRIVEWAY SPACES	56 SP.
GUEST SPACES	43 SP.
BUILDING HEIGHT	30' MAX
TRAFFIC ANALYSIS ZONE (TAZ)	294

NOTE:
1. REFER TO CIVIL PLANS FOR UTILITIES, GRADING, SIGNAGE AND PAVEMENT MARKING.
2. REFER TO PHOTOMETRIC PLANS FOR LIGHTING LOCATIONS.

PROPERTY DEVELOPMENT REGULATIONS (TOWNHOUSE) SEC.34-1064(e)

ZONING DISTRICT (RM)	MAX BLDG COVER	MIN. SETBACKS			
		FRONT	SIDE	CORNER STREET	REAR
REQUIRED	40%	25'	20'	25'	20'
PROPOSED	18%	30'	20'	N/A	20'

NOTE: PROPERTY DEVELOPMENT REGULATIONS TAKEN FROM PERIMETER OF DEVELOPMENT. PER SEC. 34-1064.

WAIVER CHART

WAIVER SUBJECT	CODE SECTION	REQUIRED	PROPOSED	DEVIATION
MIN. LOT AREA	34-766(1)	385,500 SF / 8.85 AC.	220,849 SF / 5.07 AC.	-164,651 SF / - 3.78 AC.
PARKING DRIVE AISLE	34-1328	26'	20'	-6'

LEGEND

AC. = ACRES
℄ = CENTER LINE
D.E. = DRAINAGE EASEMENT
DRO = DEVELOPMENT REVIEW OFFICERS
D.U. = DWELLING UNITS
EX. = EXISTING
FLU = FUTURE LAND USE
M = MODEL UNIT
O.H.E. = OVERHANG EASEMENT
O.R.B. = OFFICIAL RECORD BOOK
O.S.T. = OPEN SPACE TRACT
P = POSTAL DELIVERY PARKING
P.B. = PLAT BOOK
PDR = PROPERTY DEVELOPMENT REGULATIONS
PG. = PAGE
R = RADIUS
R.O.W. = RIGHT-OF-WAY
S.B. = SETBACK
S/W = SIDEWALK
S.F. = SQUARE FEET
T.B.A. = TO BE ABANDONED
TYP = TYPICAL
TH = TOWNHOME
U.E. = UTILITY EASEMENT

WGI®
2035 Vista Parkway, West Palm Beach, FL 33411
Phone No. 866.909.2220 www.wginc.com
Cert No. 6091 - LB No. 7055

REVISIONS

NO.	DATE	DESCRIPTION	BY
1	6-11-2021	RESUBMITTAL	
2	8-20-2021	RESUBMITTAL	
3	11-03-2021	RESUBMITTAL	
4	12-10-2021	RESUBMITTAL	
5	05-13-2022	RESUBMITTAL	

CAD 5581\00\PL-SITEDWG
JOB NO. 5581.00
DRAWN BY R.C
CHECK BY J.P
DATE 11-03-2021

BELMONT
VILLAGE OF PALM SPRINGS

SITE PLAN

SHEET:
SP-1

Rets Russell P:\5500\5581.01 1951 Kirk Road - Land Dev\PLANS\5581\00\PL-SITE.dwg — Plotted: 5/13/2022 12:48:23 PM Saved: 5/13/2022 12:45:54 AM

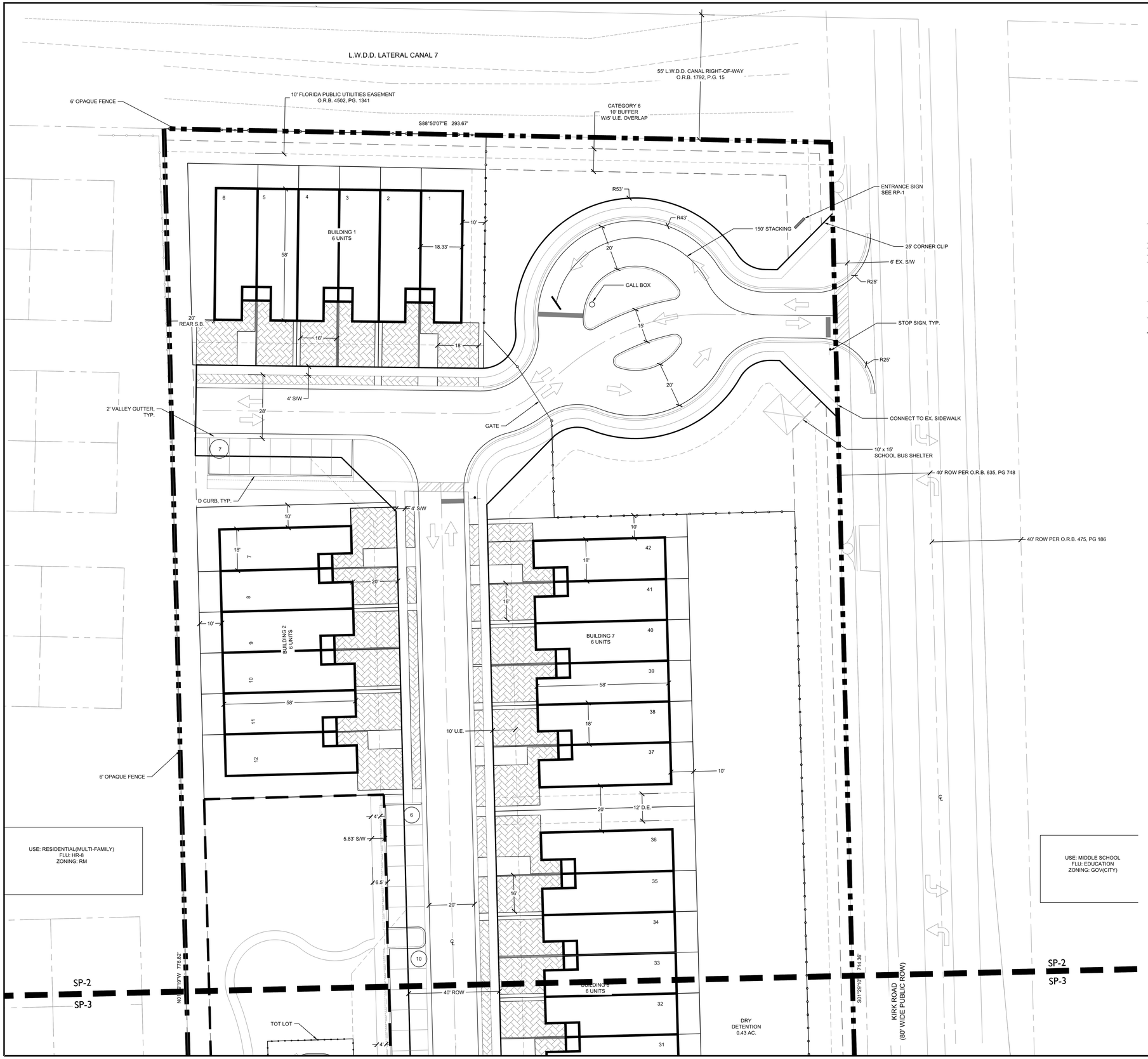

LOCATION MAP

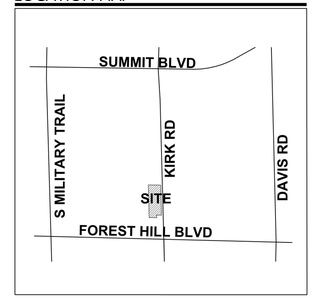

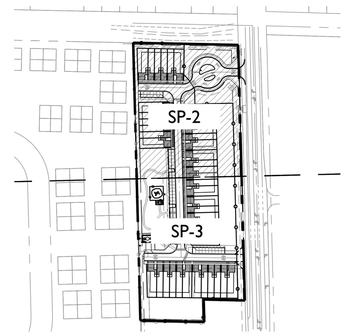

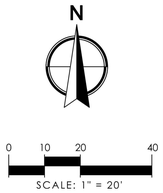

LEGEND

AC. = ACRES
℄ = CENTER LINE
D.E. = DRAINAGE EASEMENT
DRO = DEVELOPMENT REVIEW OFFICERS
D.U. = DWELLING UNITS
EX. = EXISTING
FLU = FUTURE LAND USE
M = MODEL UNIT
O.H.E. = OVERHANG EASEMENT
O.R.B. = OFFICIAL RECORD BOOK
O.S.T. = OPEN SPACE TRACT
P = POSTAL DELIVERY PARKING
P.B. = PLAT BOOK
PDR = PROPERTY DEVELOPMENT REGULATIONS
PG. = PAGE
R = RADIUS
R.O.W. = RIGHT-OF-WAY
S.B. = SETBACK
S/W = SIDEWALK
S.F. = SQUARE FEET
T.B.A. = TO BE ABANDONED
TYP = TYPICAL
TH = TOWNHOME
U.E. = UTILITY EASEMENT

WGI®
2035 Vista Parkway, West Palm Beach, FL 33411
Phone No. 866.909.2220 www.wginc.com
Cert No. 6091 - LB No. 7055

REVISIONS

NO.	DATE	DESCRIPTION	BY
1	6-15-2021	RESUBMITTAL	####
2	5-13-2022	RESUBMITTAL	

CAD 558100-PL-SITE.DWG	
JOB NO.	5581.00
DRAWN BY	R.C
CHECK BY	J.P
DATE	4-16-2021

BELMONT
VILLAGE OF PALM SPRINGS

SITE PLAN

SHEET:
SP-2

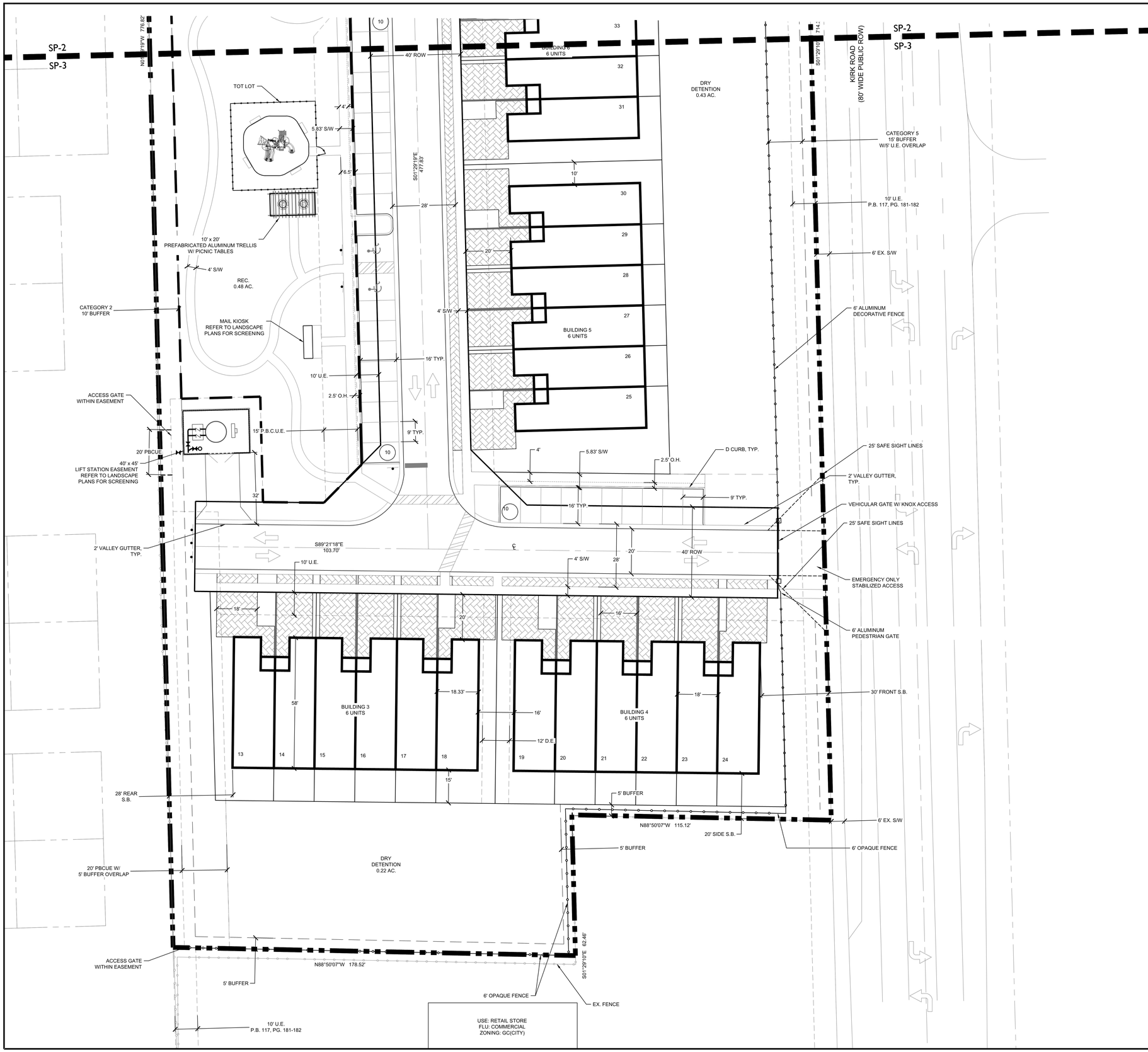

LOCATION MAP

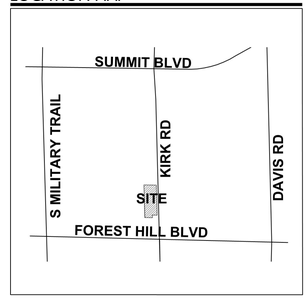

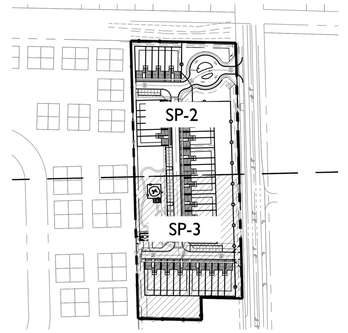

N

0 10 20 40
SCALE: 1" = 20'

LEGEND

AC. = ACRES
℄ = CENTER LINE
D.E. = DRAINAGE EASEMENT
DRO = DEVELOPMENT REVIEW OFFICERS
D.U. = DWELLING UNITS
EX. = EXISTING
FLU = FUTURE LAND USE
M = MODEL UNIT
O.H.E. = OVERHANG EASEMENT
O.R.B. = OFFICIAL RECORD BOOK
O.S.T. = OPEN SPACE TRACT
P = POSTAL DELIVERY PARKING
P.B. = PLAT BOOK
PDR = PROPERTY DEVELOPMENT REGULATIONS
PG. = PAGE
R = RADIUS
R.O.W. = RIGHT-OF-WAY
S.B. = SETBACK
S/W = SIDEWALK
S.F. = SQUARE FEET
T.B.A. = TO BE ABANDONED
TYP = TYPICAL
TH = TOWNHOME
U.E. = UTILITY EASEMENT

WGI®
2035 Vista Parkway, West Palm Beach, FL 33411
Phone No. 866.909.2220 www.wginc.com
Cert No. 6091 - LB No. 7055

REVISIONS

NO.	DATE	DESCRIPTION	BY
1	6-15-2021	RESUBMITTAL	####
2	05-13-2022	RESUBMITTAL	

CAD 558100-PL-SITE.DWG
JOB NO. 5581.00
DRAWN BY R.C
CHECK BY J.P
DATE 4-16-2021

BELMONT
VILLAGE OF PALM SPRINGS

SITE PLAN

SHEET:
SP-3

TYPICAL UNIT DETAILS

SCALE: NTS

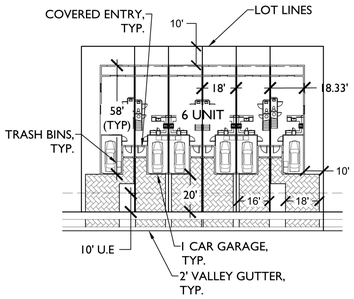

6 UNIT TYPICAL

ENTRY SIGN DETAIL

SCALE: NTS

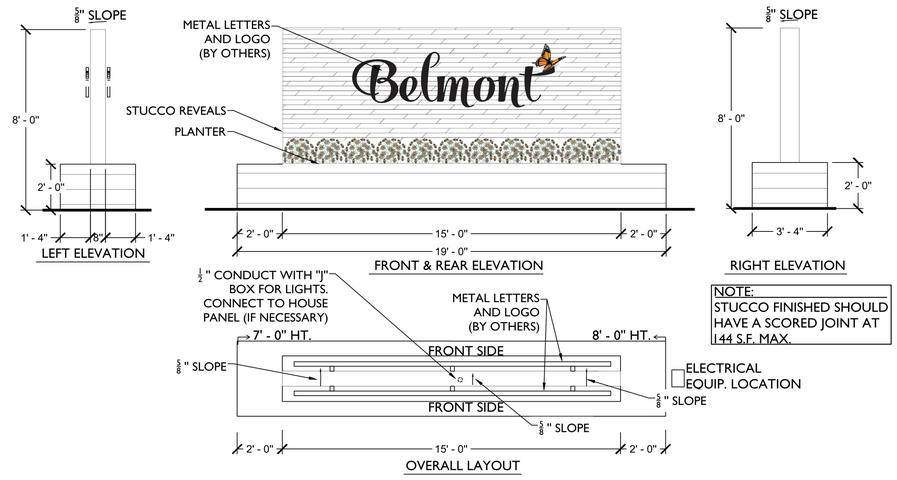

NOTE:
STUCCO FINISHED SHOULD HAVE A SCORED JOINT AT 144 S.F. MAX.

OPEN SPACE PLAN EXHIBIT

SCALE: NTS

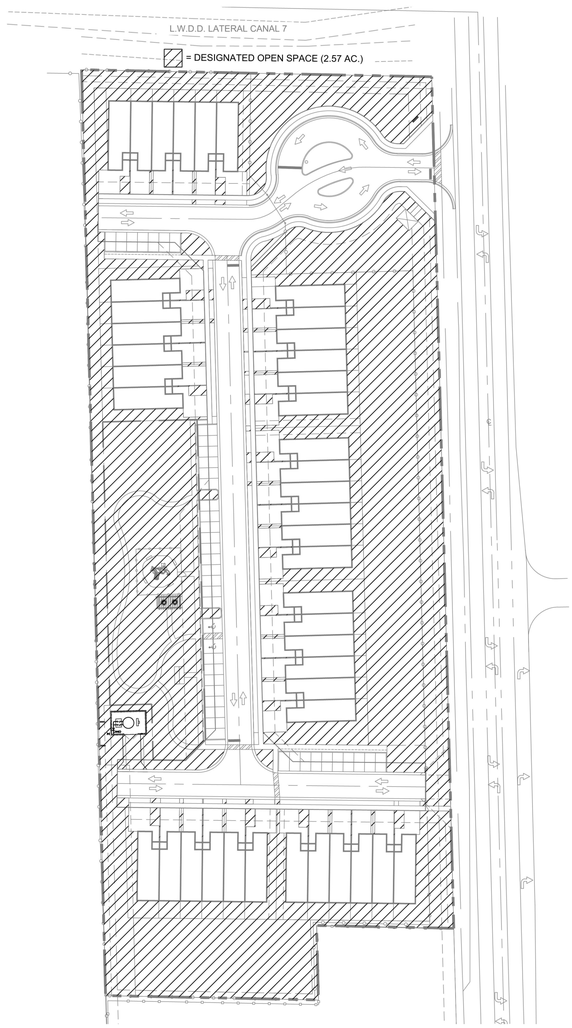

PERVIOUS / IMPERVIOUS PLAN EXHIBIT

SCALE: NTS

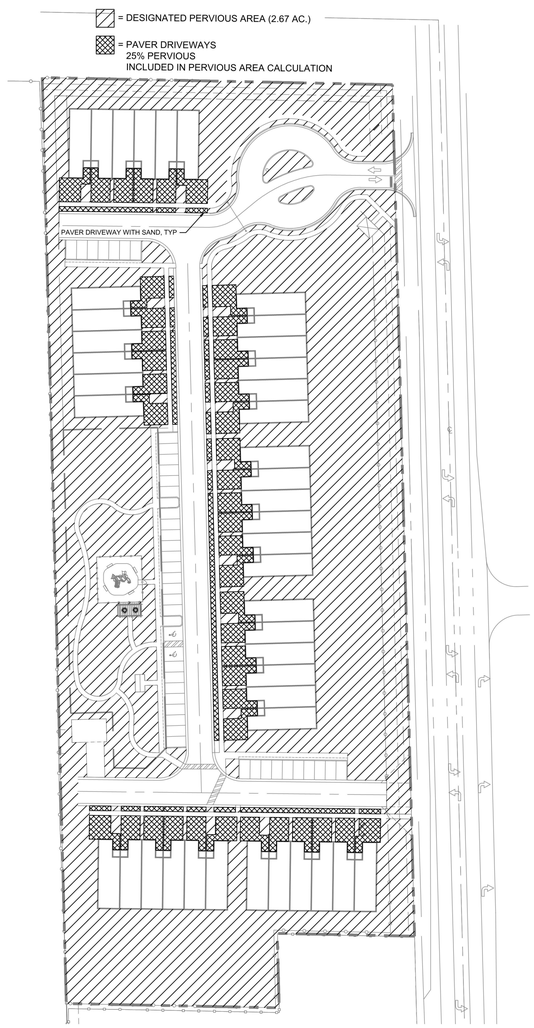

REC. AREA DETAIL

SCALE: NTS

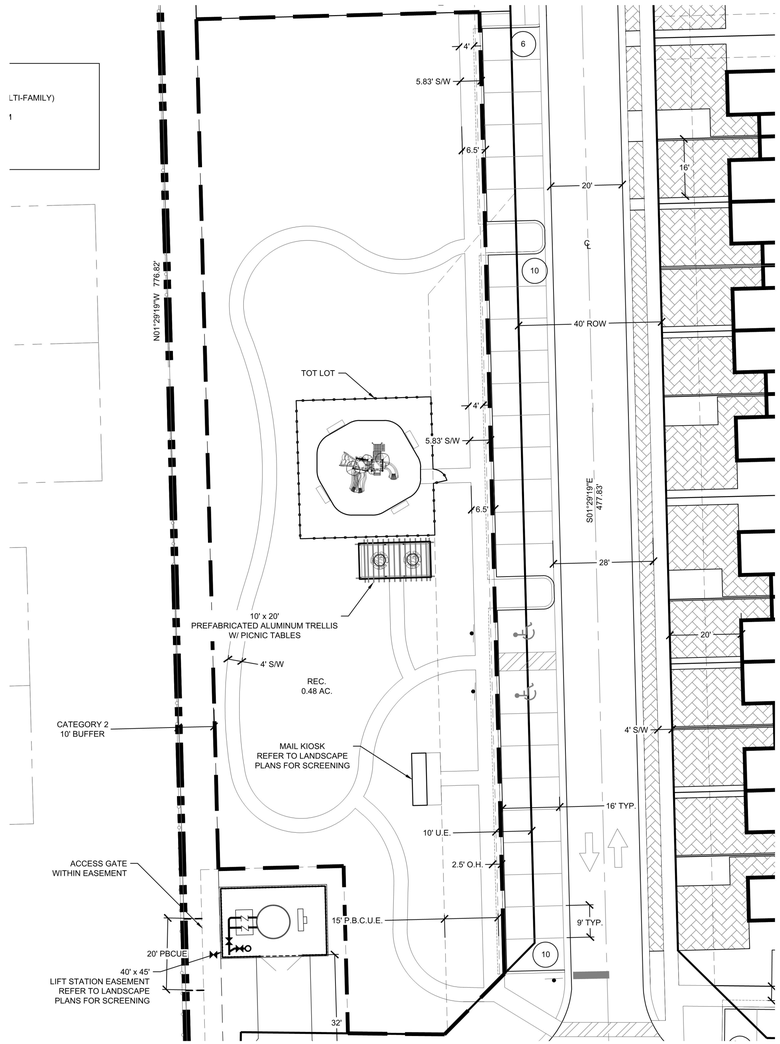

WGI
2035 Vista Parkway, West Palm Beach, FL 33411
Phone No. 866.909.2220 www.wginc.com
Cert No. 6061 - LB No. 7055

REVISIONS

NO.	DATE	DESCRIPTION	BY
1	6-11-2021	RESUBMITTAL	#####
2	8-20-2021	RESUBMITTAL	
3	11-03-2021	RESUBMITTAL	
4	12-10-2021	RESUBMITTAL	
5	05-13-2022	RESUBMITTAL	

CAD 5581\00-PA_SITE.DWG	
JOB NO.	5581.00
DRAWN BY	R.C
CHECK BY	J.P
DATE	4-16-2021

BELMONT
VILLAGE OF PALM SPRINGS

REGULATING PLAN

SHEET:
RP-1

Palm Russell P:\5581\5581.01 1591 Kirk Road - Land Dev\PLANS\5581\5581-PA_SITE.dwg — Plotted: 5/13/2022 12:51:42 PM Saved: 5/13/2022 10:54:54 AM

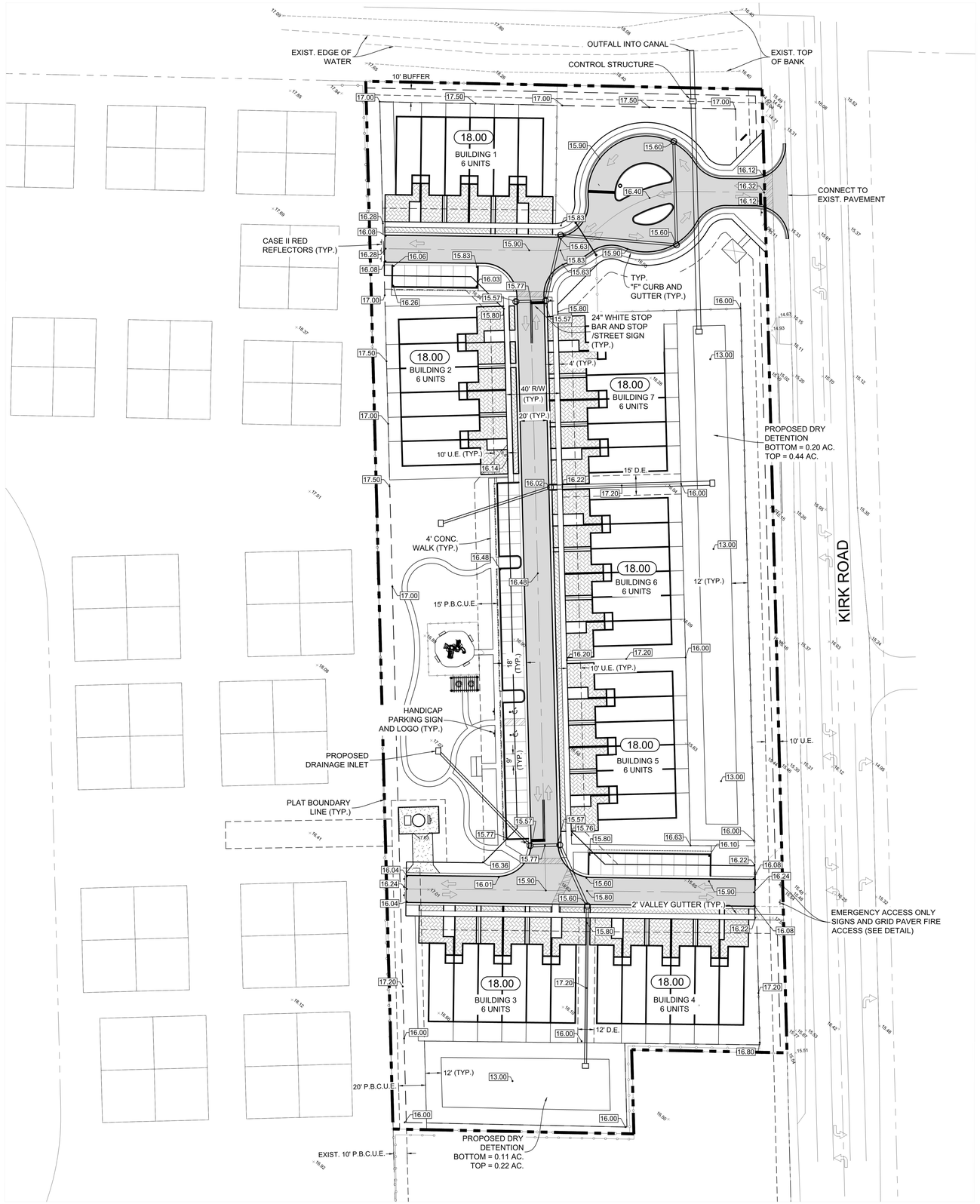

GRAPHIC SCALE

0 20 40 80 120

(IN FEET)
1 INCH = 40 FT.

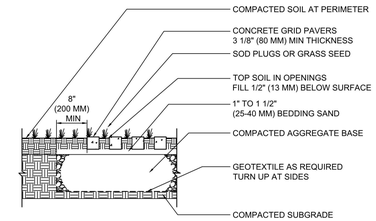

CONCRETE GRID PAVER FIRE LANE DETAIL

NO SCALE

	WEARING SURFACE	BASE	SUB-GRADE
FIRE ACCESS	3-1/8" THICK, CONCRETE GRID PAVERS ON 1" SAND BED	8" THICK BASEROCK COMPACTED TO 98% MAXIMUM DRY DENSITY PER A.A.S.H.T.O. T-180 IN TWO EQUAL LIFTS	12" THICK COMPACTED TO 98% MAXIMUM DRY DENSITY PER A.A.S.H.T.O. T-180

811 Know what's **below.** **Call** before you dig.
www.callsunshine.com

MICHAEL B. SCHORAH & ASSOCIATES, INC.
ENGINEERS ◆ SURVEYORS ◆ DEVELOPMENT CONSULTANTS
EB# 2438 TEL. (561) 968-0080 LB# 2438
FAX. (561) 642-9726
www.schoran.com
1850 FOREST HILL BLVD., SUITE 206
WEST PALM BEACH, FLORIDA 33406

REVISIONS
8-16-21: REV. PER PALM SPRINGS
10-21-21: REV. PER PALM SPRINGS
12-2-21: REV. PER PALM SPRINGS
5-6-22: REV. PER PALM SPRINGS

DRAWN/CHECKED: AMG / MHC
SCALE: 1" = 40'
DATE: APRIL 2021

MARTHA H. CARTER, P.E.
FLORIDA LICENSE #47589
FOR MICHAEL B. SCHORAH
AND ASSOCIATES, INC.
DATE:

PROJECT: BELMONT
DESCRIPTION: CONCEPTUAL PAVING AND DRAINAGE PLAN

JOB NO. 1715
SHEET NO. 1
OF 1

PathName : C:\Users\Alicia\AppData\Local\Temp\AcPublish_18544\1715 DEV 5-5-22.dwg Date\Time : Mon, 09 May 2022 - 9:08am

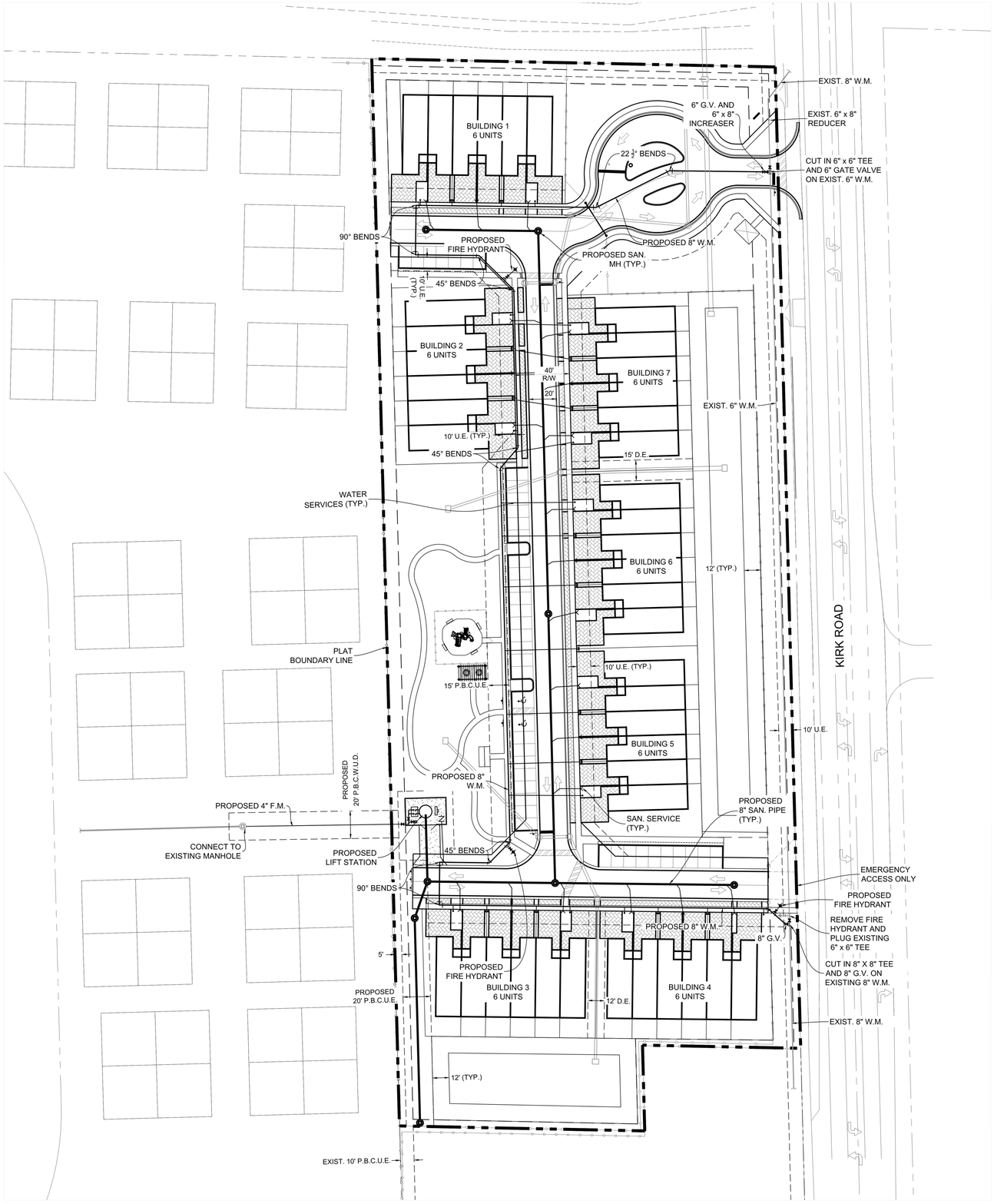

GRAPHIC SCALE

0 20 40 80 120

(IN FEET)
1 INCH = 40 FT.

MICHAEL B. SCHORAH & ASSOCIATES, INC.

ENGINEERS ◆ SURVEYORS ◆ DEVELOPMENT CONSULTANTS

EB# 2438 LB# 2438

TEL. (561) 968-0080
FAX. (561) 642-9726
www.schorah.com

1850 FOREST HILL BLVD., SUITE 206
WEST PALM BEACH, FLORIDA 33406

REVISIONS

8-16-21: REV. PER PALM SPRINGS
10-21-21: REV. PER PALM SPRINGS
12-2-21: REV. PER PALM SPRINGS
5-6-22: REV. PER PALM SPRINGS

DRAWN/CHECKED: AMG / MHC

SCALE: 1" = 40'

DATE: APRIL 2021

MARTHA H. CARTER, P.E.
FLORIDA LICENSE #47589
FOR MICHAEL B. SCHORAH AND ASSOCIATES, INC.

DATE:

PROJECT: BELMONT

DESCRIPTION: CONCEPTUAL WATER AND SEWER PLAN

JOB NO. 1715

SHEET NO. 1

OF 1

811 Know what's below. Call before you dig.
www.callsunshine.com

PathName : C:\Users\Alicia\AppData\Local\Temp\AcPublish_185441\715 DEV 5-5-22.dwg Date\Time : Mon, 09 May 2022 - 9:08am

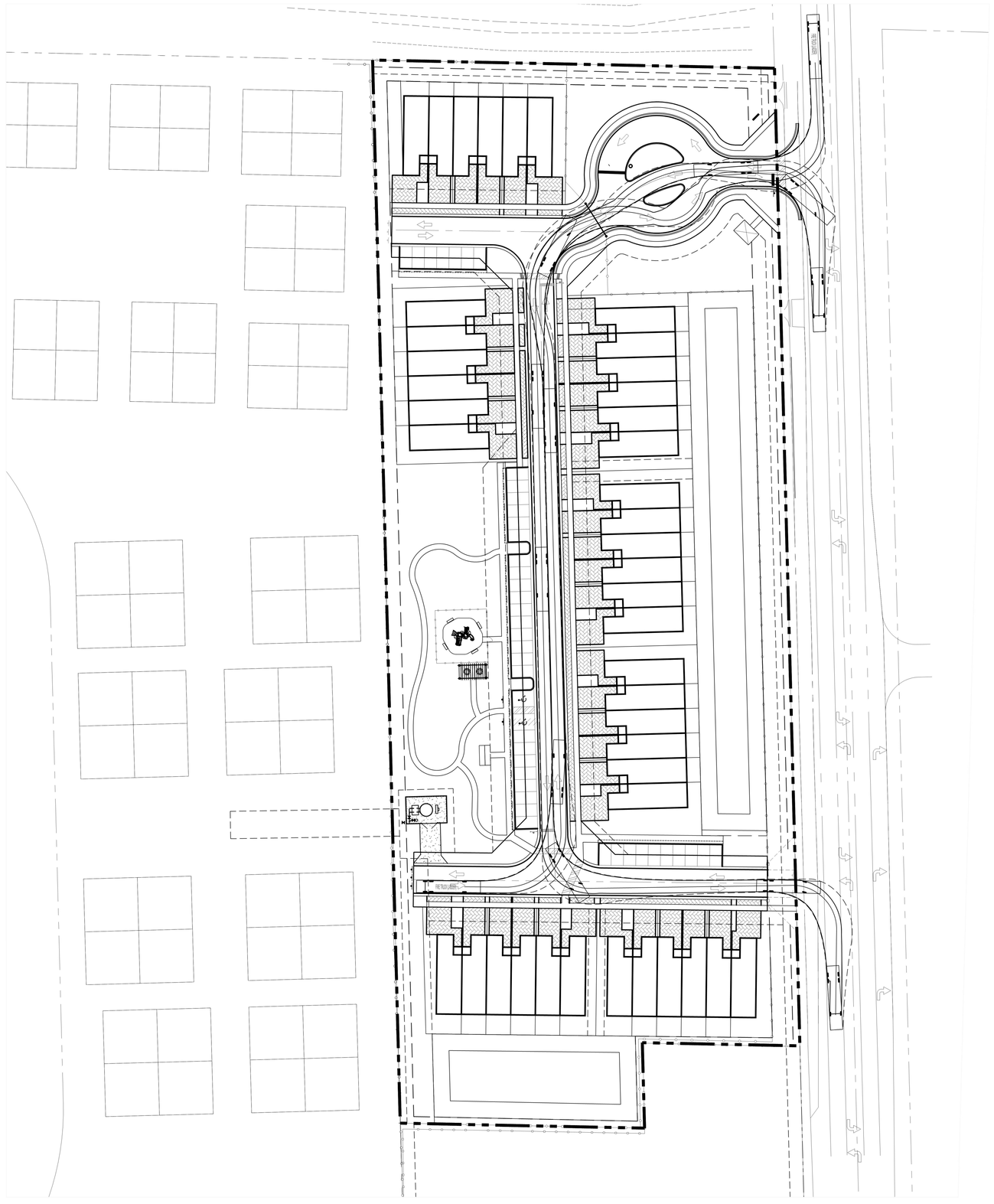

GRAPHIC SCALE

0 20 40 80 120

(IN FEET)
1 INCH = 40 FT.

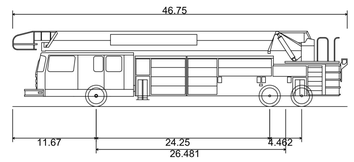

FIRE TRUCK (LADDER)

Overall Length	46.750ft
Overall Width	9.000ft
Overall Body Height	10.519ft
Min Body Ground Clearance	0.950ft
Track Width	8.500ft
Lock-to-lock time	4.00s
Max Steering Angle (Virtual)	40.00°

811 Know what's below. Call before you dig.
www.callsunshine.com

MICHAEL B. SCHORAH & ASSOCIATES, INC.
ENGINEERS ◆ SURVEYORS ◆ DEVELOPMENT CONSULTANTS
EB# 2438 TEL. (561) 968-0080 FAX. (561) 642-9726 www.schorah.com LB# 2438
1850 FOREST HILL BLVD., SUITE 206
WEST PALM BEACH, FLORIDA 33406

REVISIONS
5-6-22: REV. PER PALM SPRINGS

DRAWN/CHECKED: AMG / MHC
SCALE: 1" = 40'
MARTHA H. CARTER, P.E. FLORIDA LICENSE #47589 FOR MICHAEL B. SCHORAH AND ASSOCIATES, INC.
DATE: APRIL 2021

PROJECT: BELMONT
DESCRIPTION: VEHICLE TRACKING PLAN (FIRE TRUCK)

JOB NO. 1715
SHEET NO. 1
OF 1

PathName : C:\Users\Alicia\AppData\Local\Temp\AcPublish_18544\1715 DEV 5-5-22.dwg DateTime : Mon, 09 May 2022 - 9:08am

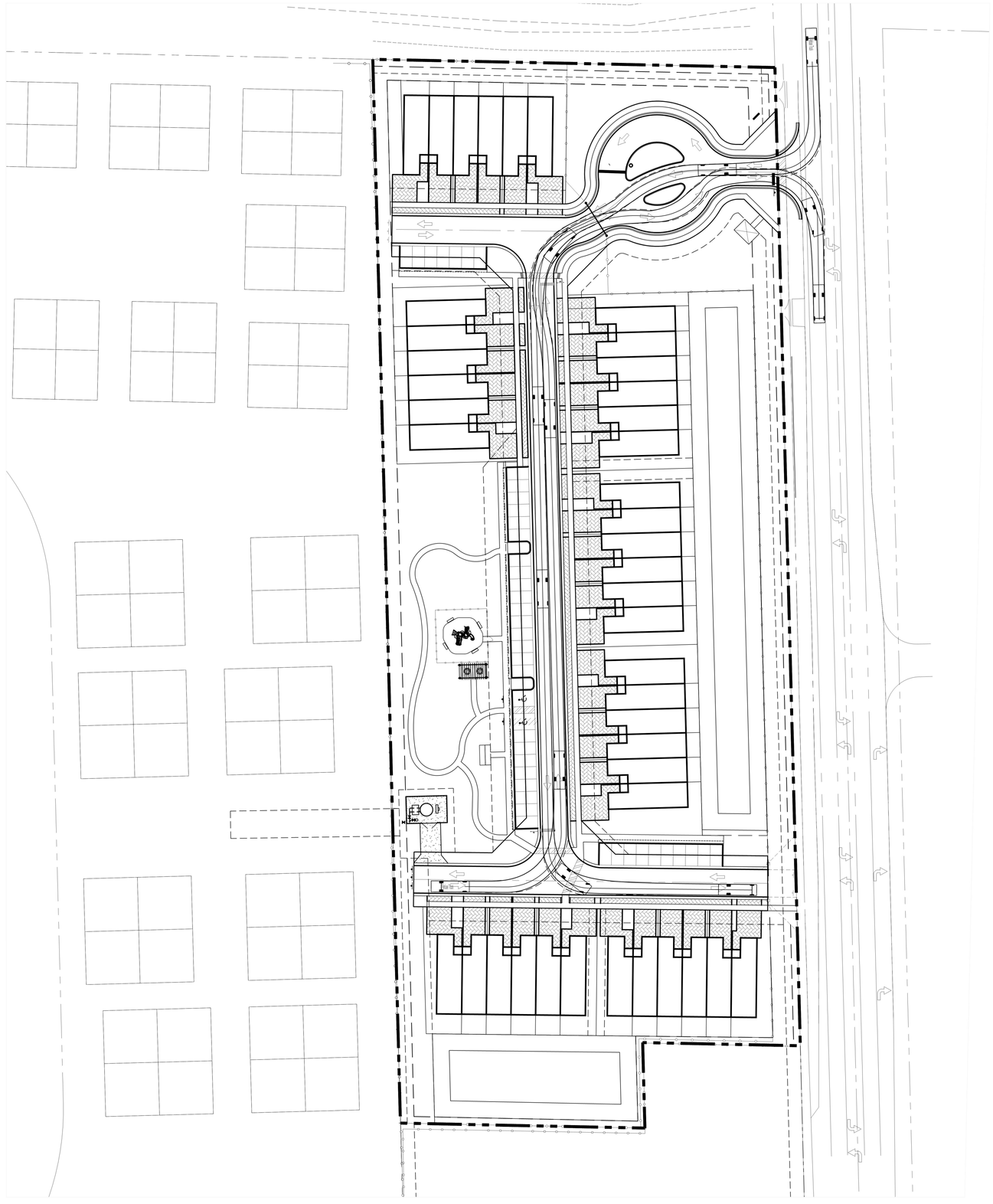

GRAPHIC SCALE

0 20 40 80 120

(IN FEET)
1 INCH = 40 FT.

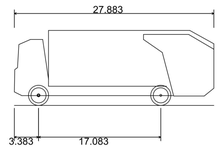

Refuse Truck	
Overall Length	27.883ft
Overall Width	8.042ft
Overall Body Height	10.488ft
Min Body Ground Clearance	1.318ft
Track Width	8.042ft
Lock-to-lock time	6.00s
Curb to Curb Turning Radius	27.400ft

811 Know what's below. Call before you dig.
www.callsunshine.com

MICHAEL B. SCHORAH & ASSOCIATES, INC.
ENGINEERS ◆ SURVEYORS ◆ DEVELOPMENT CONSULTANTS
EB# 2438 TEL. (561) 968-0080 FAX. (561) 642-9726 www.schorah.com LB# 2438
1850 FOREST HILL BLVD., SUITE 206
WEST PALM BEACH, FLORIDA 33406

REVISIONS
5-6-22: REV. PER PALM SPRINGS

DRAWN/CHECKED: AMG / MHC
SCALE: 1" = 40'
MARTHA H. CARTER, P.E. FLORIDA LICENSE #47589 FOR MICHAEL B. SCHORAH AND ASSOCIATES, INC.
DATE: APRIL 2021

PROJECT: BELMONT
DESCRIPTION: VEHICLE TRACKING EXHIBIT (GARBAGE TRUCK)

JOB NO. 1715
SHEET NO. 1
OF 1

PathName : C:\Users\Alicia\AppData\Local\Temp\AcPublish_18544\1715 DEV 5-5-22.dwg DateTime : Mon, 09 May 2022 - 9:08am

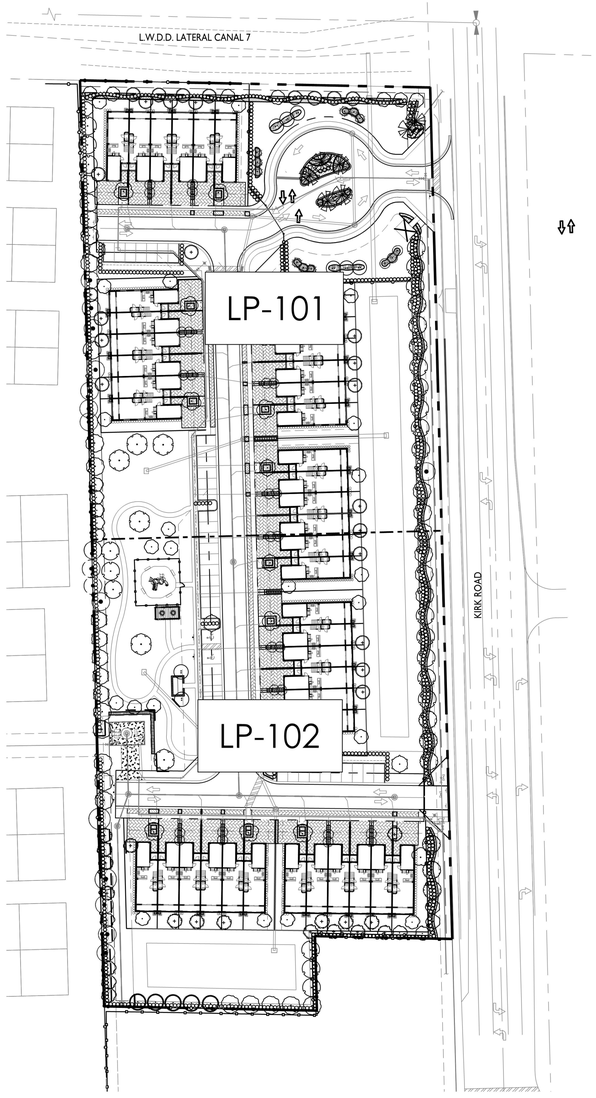

LANDSCAPE REQUIREMENTS

PALM SPRINGS, FLORIDA

PERIMETER LANDSCAPING	REQUIRED	PROVIDED
NORTH BUFFER		
1 CANOPY TREE PER 20 LINEAR FEET AND A MEANDERING 3' HEDGE AT TIME OF PLANTING WITH 2 TIERS	294 LF / 20 = 15 TREES AND A MEANDERING 3' HEDGE WITH 2 TIERS	15 TREES AND A MEANDERING 3' HEDGE WITH 2 TIERS
EAST BUFFER		
CATEGORY 5 STANDARD - 15' BUFFER 1 CANOPY TREE PER 20 LINEAR FEET AND A MEANDERING 3' HEDGE AT TIME OF PLANTING WITH 2 TIERS	*605 LF / 20 = 31 TREES AND A MEANDERING 3' HEDGE WITH 2 TIERS *R.O.W. HAS BEEN SUBTRACTED FROM BUFFER LENGTH	31 TREES AND 1 EX. TREE = 32 TREES MEANDERING 3' HEDGE WITH 2 TIERS
SOUTH BUFFER		
5' LANDSCAPE BUFFER 3 1 CANOPY TREE PER 20 LINEAR FEET WALL/FENCE AND 3' HEDGE AT TIME OF PLANTING	115 LF / 20 = 6 TREES 3' HEDGE AT TIME OF PLANTING	6 TREES AND 3' HEDGE AT TIME OF PLANTING
5' LANDSCAPE BUFFER 2 1 CANOPY TREE PER 20 LINEAR FEET WALL/FENCE AND 3' HEDGE AT TIME OF PLANTING	63 LF/20 = 4 TREES 3' HEDGE AT TIME OF PLANTING	4 TREES AND 3' HEDGE AT TIME OF PLANTING
5' LANDSCAPE BUFFER 1 1 CANOPY TREE PER 20 LINEAR FEET WALL/FENCE AND 3' HEDGE AT TIME OF PLANTING	179 LF/20 = 9 TREES 3' HEDGE AT TIME OF PLANTING	9 TREES AND 3' HEDGE AT TIME OF PLANTING
WEST BUFFER		
CATEGORY 2 STANDARD - 10' BUFFER 1 CANOPY TREE PER 20 LINEAR FEET WALL/FENCE AND 3' HEDGE AT TIME OF PLANTING	WEST BUFFER 777 LF / 20 = 39 TREES	WEST BUFFER 36 TREES & 3 EX. TREES = 39 TREES AND 3' HEDGE AT TIME OF PLANTING
INTERIOR LANDSCAPING	REQUIRED	PROVIDED
FOUNDATION PLANTING		
AT LEAST 1 TREE OR CLUSTER OF 3 PALMS SHALL BE INSTALLED FOR EACH 30 LF OF BUILDING FACADE FACING A STREET	6 UNIT BUILDING 110 LF/ 30 = 4 TREES AT STREET FACADE FOR EACH BUILDING	6 UNIT BUILDING 4 TREES FOR EACH BUILDING (3 TREES AND 4 PALMS @ 3:1)
RESIDENTIAL PARCEL - TREE PLANTING		
1 TREE PLANTED FOR EVERY 1,500 SF OF A PARCEL USED FOR RESIDENTIAL PURPOSES	6 UNIT BUILDING 11,325 SF / 1,500 SF = 8 TREES FOR EACH BUILDING	6 UNIT BUILDING 8 TREES FOR EACH BUILDING (8 TREES AND 4 PALMS @ 3:1)
NON-RESIDENTIAL PARCEL - TREE PLANTING		
1 TREE PLANTED FOR EVERY 2,500 SF OF A PARCEL USED FOR NON RESIDENTIAL PURPOSES	REC AREA 20,766 SF / 2,500 SF = 9 TREES	REC AREA 15 TREES & 2 PALMS

Know what's BELOW. CALL before you dig

Call 811 two business days before digging

N

0 30 60 120

SCALE: 1" = 60'

WGL
2035 Vista Parkway, West Palm Beach, FL 33411
Phone No. 866.909.2220 www.wglinc.com
Cert No. 6091 - LB No. 7055

REVISIONS

NO	DATE	DESCRIPTION	BY
1	6/15/2021	RESUBMITTAL	BJ
2	8/26/2021	RESUBMITTAL	BJ
3	10/29/2021	RESUBMITTAL	BJ
4	12/14/2021	RESUBMITTAL	BJ
5	5/11/2022	RESUBMITTAL	BJ

LANDSCAPE ARCHITECT OF RECORD
JASON L. MIHALOVITS, PLA FL#6667128

JOB NO.	5581.00
DRAWN BY	BJ
CHECK BY	JM
DATE	4/23/2021

BELMONT
VILLAGE OF PALM SPRINGS, FLORIDA
OVERALL LANDSCAPE PLAN

SHEET:
LP-100

Bryan Jackman P:\5500\5581.01 1891 Kirk Road - Land Dv\LA\Drawings\Landscape\\5581101~LA.dwg ——— Plotted: 5/10/2022 5:02:29 PM Saved: 5/10/2022 4:56:02 PM

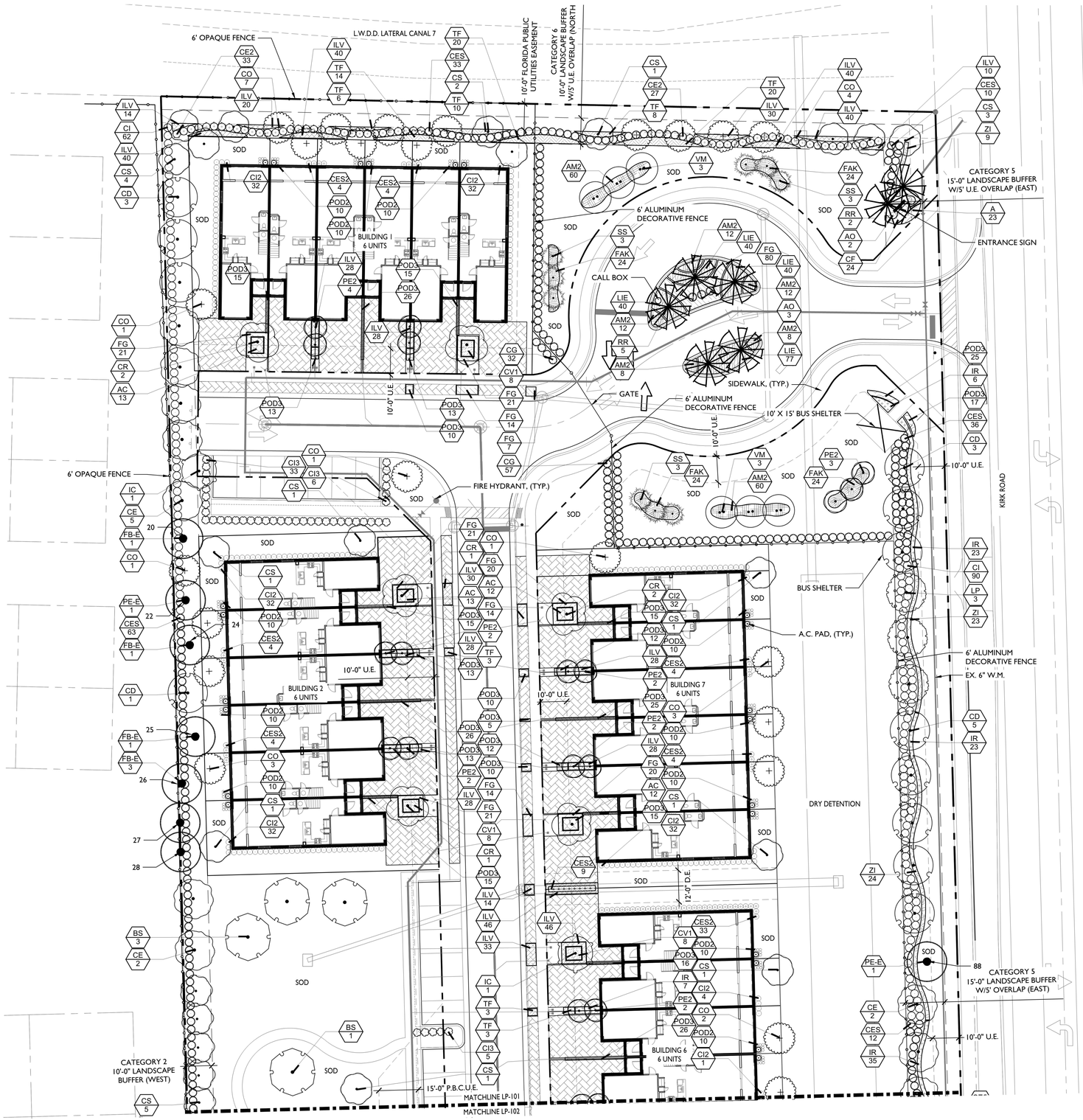

SHEET KEY MAP

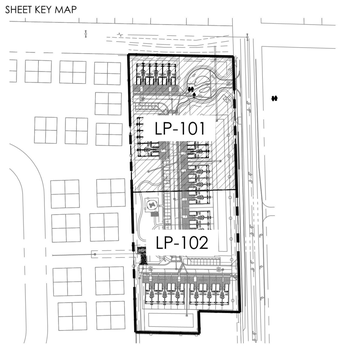

LEGEND

TREE/ PALM TO PRESERVE

N

0 10 20 40

SCALE: 1" = 20'

WGL
2035 Vista Parkway, West Palm Beach, FL 33411
Phone No. 866.909.2220 www.wglinc.com
Cert No. 6091 - LB No. 7055

NO	DATE	DESCRIPTION	BY
1	6/15/2021	RESUBMITTAL	BJ
2	8/26/2021	RESUBMITTAL	BJ
3	10/29/2021	RESUBMITTAL	BJ
4	12/14/2021	RESUBMITTAL	BJ
5	5/11/2022	RESUBMITTAL	BJ

REVISIONS

LANDSCAPE ARCHITECT OF RECORD
JASON L. MIHALOVITS, PLA FL#6667128

JOB NO.	5581.00
DRAWN BY	BJ
CHECK BY	JM
DATE	4/23/2021

BELMONT
VILLAGE OF PALM SPRINGS, FLORIDA
LANDSCAPE PLAN

SHEET:
LP-101

Bryan Jackman P:\5500\5581.01 1581 Kirk Road - Land Dv\LA\Drawings\Landscape\5581LO-LA.dwg ——— Plotted: 5/10/2022 6:00:33 PM Saved: 5/10/2022 4:56:02 PM

Bryan Jackman P:\5500\5581.01 1591 Kirk Road - Land De\LA\Drawings\Landscape\558100-LA.dwg ---- Plotted: 5/10/2022 5:00:38 PM Saved: 5/10/2022 4:58:02 PM

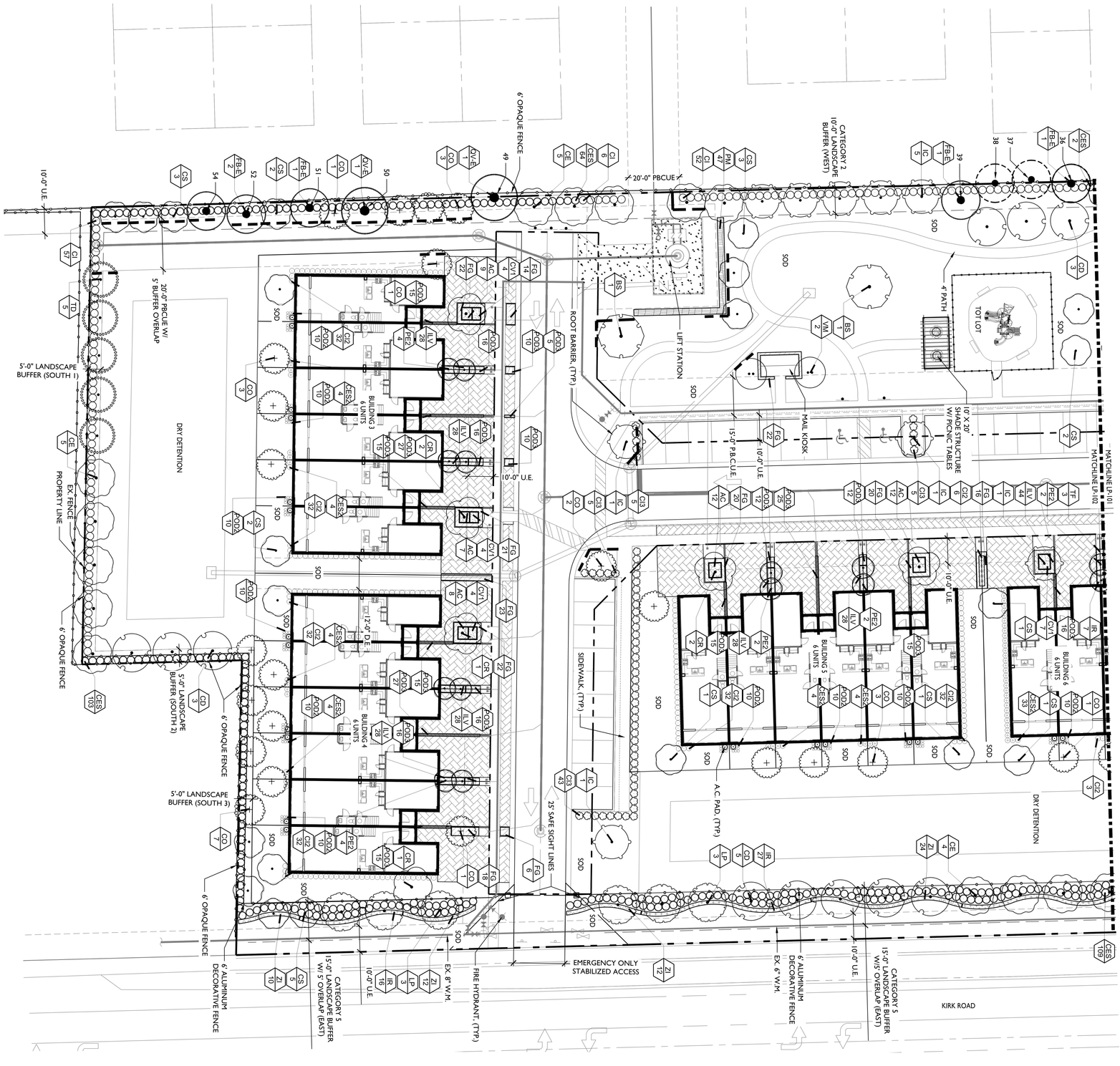



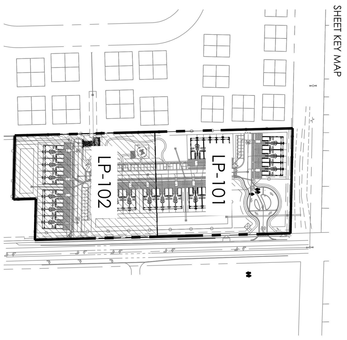

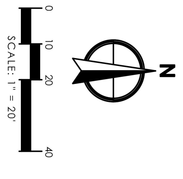

SHEET:
LP-102

BELMONT
VILLAGE OF PALM SPRINGS, FLORIDA
LANDSCAPE PLAN

LANDSCAPE ARCHITECT OF RECORD JASON L. MIHALOVITS, PLA FL#6667128	
JOB NO.	5581.00
DRAWN BY	BJ
CHECK BY	JM
DATE	4/23/2021

REVISIONS

NO.	DATE	DESCRIPTION	BY
1	6/15/2021	RESUBMITTAL	BJ
2	8/20/2021	RESUBMITTAL	BJ
3	10/29/2021	RESUBMITTAL	BJ
4	12/14/2021	RESUBMITTAL	BJ
5	5/11/2022	RESUBMITTAL	BJ

WGI
2035 Vista Parkway, West Palm Beach, FL 33411
Phone No. 866.909.2220 www.wginc.com
Cert No. 6091 - LB No. 7055

SMALL PALM STAKING PLAN

NTS.

NOTE:
1. APPLICABLE TO ALL PALMS WITH CALIPER SIZE OF LESS THAN SIX (6) INCHES.
2. ALL TREE SUPPORTS MATERIALS ARE TO BE REMOVED FROM EACH TREE ONCE IT IS ESTABLISHED. TYPICALLY SIX MONTHS FOR SHADE TREES OR ONE YEAR FOR PALMS.

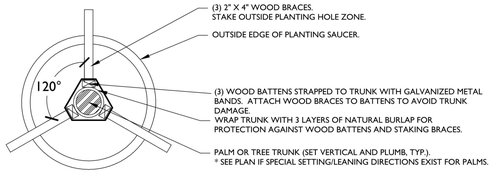

LARGE PALM OR TREE STAKING PLAN

NTS.

NOTE:
1. APPLICABLE TO ALL MULTI-TRUNK PALMS AND PALMS WITH CALIPER SIZE OF SIX (6) INCHES OR GREATER
2. ALL TREE SUPPORTS MATERIALS ARE TO BE REMOVED FROM EACH TREE ONCE IT IS ESTABLISHED. TYPICALLY SIX MONTHS FOR SHADE TREES OR ONE YEAR FOR PALMS.

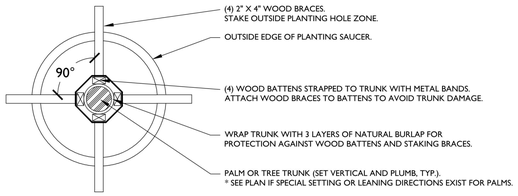

PALM PLANTING DETAIL

NTS.

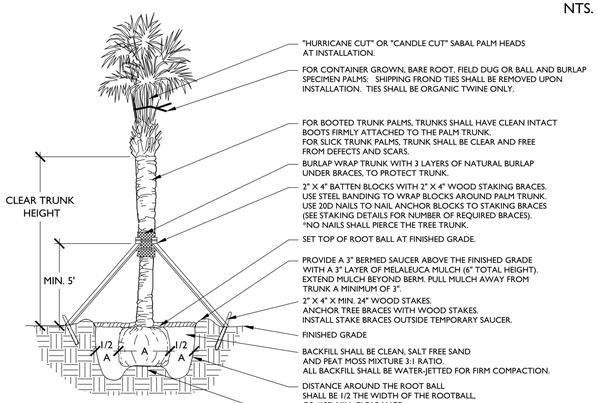

TREE PLANTING DETAIL

NOTE:
1. ALL TREE SUPPORT MATERIALS ARE TO BE REMOVED FROM EACH TREE ONCE IT IS ESTABLISHED. TYPICALLY SIX MONTHS TO ONE YEAR AFTER PLANTING FOR SHADE TREES.

NTS.

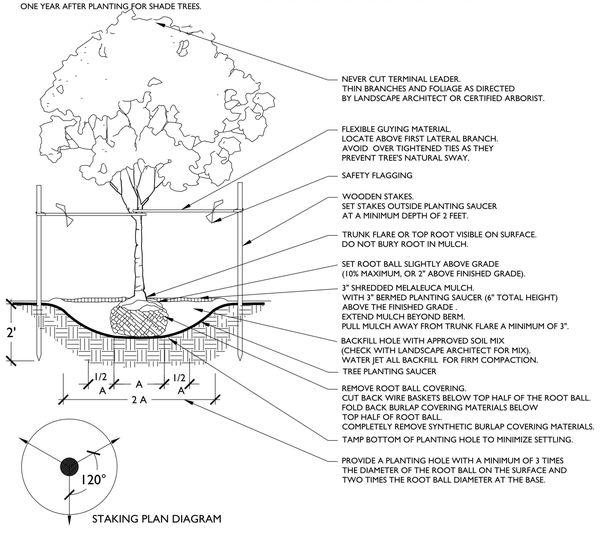

GROUNDCOVER DETAIL

NTS.

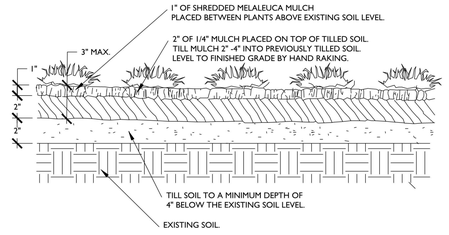

PLANT SPACING DETAIL

NTS.

SPACING "D"	ROW "A"
6" O.C.	5.2"
8" O.C.	6.93"
10" O.C.	8.66"
12" O.C.	10.4"
18" O.C.	15.6"
24" O.C.	20.8"
30" O.C.	26.0"
36" O.C.	31.2"
48" O.C.	41.6"

PLANT SPACING CHART

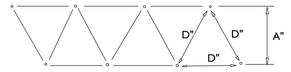

SHRUB PLANTING DETAIL

NTS.

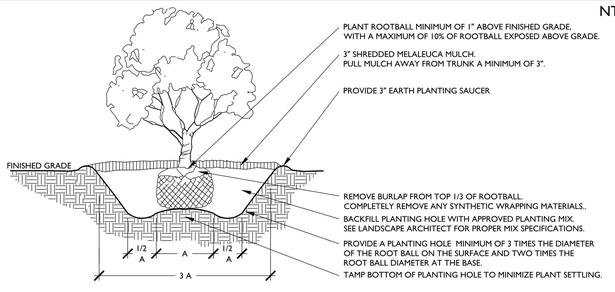

ROOT BARRIER DETAIL

NOTE:
1. TREES ARE TO BE INSTALLED WITH A MINIMUM TEN FOOT (10') SEPARATION FROM ANY PUBLIC WATER OR PUBLIC SEWER MAIN AND/OR SERVICE, HYDRANTS, AND LIFT STATIONS. IF A TEN FOOT (10') SEPARATION CANNOT BE ACHIEVED, THE TREE SHALL BE INSTALLED WITH A ROOT BARRIER SYSTEM.

2. ROOT BARRIERS SHALL COMPLY WITH ALL REQUIREMENTS OF THE MUNICIPALITY WITHIN WHICH THEY ARE LOCATED AS WELL AS WITH ANY REQUIREMENTS OF THE UTILITY HOLDER OF THE AFFECTED UTILITIES. IN THE EVENT THAT CONFLICTING REQUIREMENTS EXIST BETWEEN THIS ROOT BARRIER DETAIL AND THE MUNITICPALITY/UTILITY HOLDER REQUIREMENTS, THE MORE STRINGENT OF THE REQUIREMENTS SHALL BE APPLICABLE.

NTS.

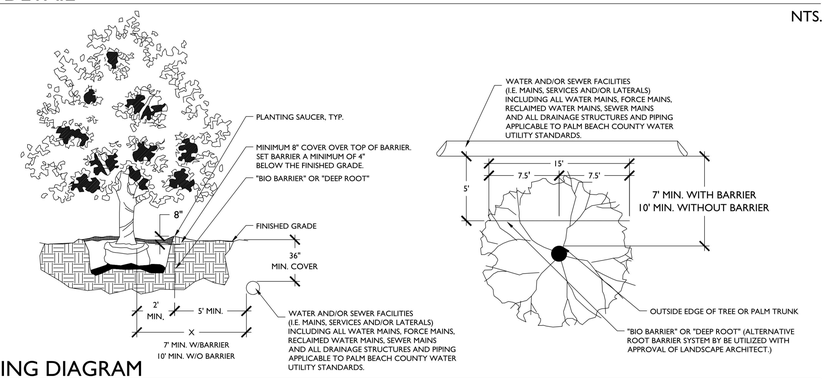

TYPICAL PLANTING DIAGRAM

NTS.

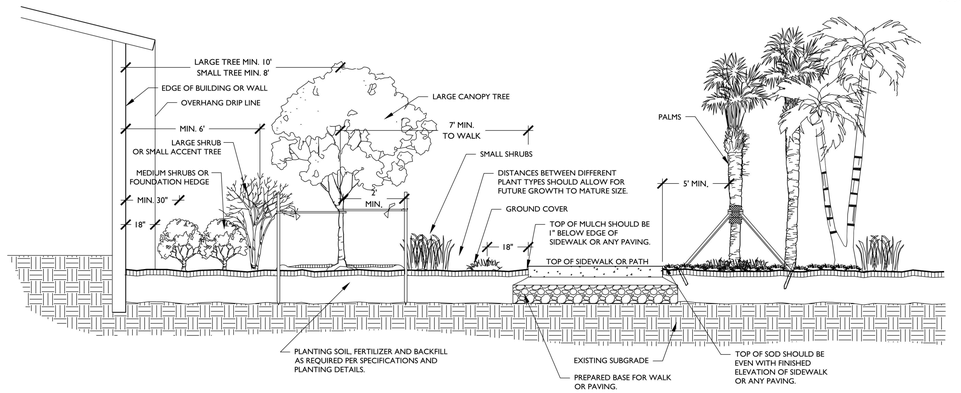

TREE PROTECTION DETAIL

NOTE: 1. THIS DETAIL APPLIES TO ALL TREES THAT WILL BE PRESERVED IN PLACE OR BE RELOCATED.

NTS.

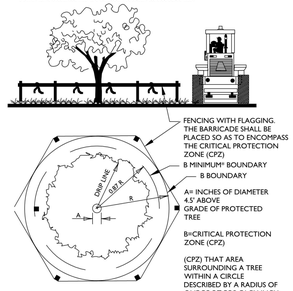

PLANT SCHEDULE OVERALL

TREES	QTY	COMMON NAME	BOTANICAL NAME	NATIVE	REMARKS
BS	6	Gumbo Limbo	Bursera simaruba	YES	12` HT. X 5` SPRD., MIN. 2" CAL., 5` C.T.
CR	12	Pitch Apple	Clusia rosea	YES	12` HT. X 5` SPRD., MIN. 2" CAL., 5` C.T.
CD	23	Pigeon Plum	Coccoloba diversiolia	YES	12` HT. X 5` SPRD., MIN. 2" CAL., 5` C.T.
CE	23	Green Buttonwood	Conocarpus erectus	YES	12` HT. X 5` SPRD., MIN. 2" CAL., 5` C.T.
CS	43	Silver Buttonwood	Conocarpus erectus sericeus	YES	12` HT. X 5` SPRD., MIN. 2" CAL., 5` C.T.
CO	45	Orange Geiger Tree	Cordia sebestena	YES	12` HT. X 5` SPRD., MIN. 2" CAL., 5` C.T.
FB-E	11	Weeping Fig	Ficus benjamina	NO	EXISTING
IC	11	Dahoon Holly	Ilex cassine	YES	12` HT. X 5` SPRD., MIN. 2" CAL., 5` C.T.
LP	9	Crape Myrtle	Lagerstroemia indica	NO	12` HT. X 5` SPRD., MIN. 2" CAL., 5` C.T.
PE-E	2	Slash Pine	Pinus elliotti	YES	EXISTING
QV-E	2	Southern Live Oak	Quercus virginiana	YES	EXISTING
TD	5	Bald Cypress	Taxodium distichum	YES	12` HT. X 5` SPRD., MIN. 2" CAL., 5` C.T.

PALMS	QTY	COMMON NAME	BOTANICAL NAME	NATIVE	REMARKS
PE2	31	Alexander Palm	Ptychosperma elegans	NO	16` OA. HT.
RR	7	Florida Royal Palm	Roystonea regia	YES	16`-18` G.W.
SS	9	Cabbage Palmetto	Sabal palmetto	YES	12`-16` C.T., STAGGERED, BOOTED
VM	8	Montgomery Palm	Veitchia montgomeryana	NO	10`-12` OA. HT., DOUBLE TRUNK

SHRUBS	QTY	COMMON NAME	BOTANICAL NAME	NATIVE	REMARKS
AO	5	Giant Silver Bromeliad	Alcantarea odorata	NO	30" OA. HT., SPECIMEN
CI	267	Cocoplum	Chrysobalanus icaco	YES	36" HT. X 36" SPRD. @ 36" O.C.
CI2	398	Cocoplum	Chrysobalanus icaco	YES	24" HT. X 24" SPRD. @ 24" O.C.
CI3	102	Cocoplum	Chrysobalanus icaco	YES	48" HT. X 36" SPRD. @ 36" O.C.
CG	89	Small Leaf Clusia	Clusia guttifera	NO	36" HT. X 36" SPRD. @ 36" O.C.
CE2	60	Green Buttonwood	Conocarpus erectus	YES	36" HT. X 36" SPRD. @ 36" O.C.
CES	432	Silver Buttonwood	Conocarpus erectus `Sericeus`	YES	36" HT. X 36" SPRD. @ 36" O.C.
CES2	123	Silver Buttonwood	Conocarpus erectus `Sericeus`	YES	24" HT. X 24" SPRD. @ 24" O.C.
POD2	210	Shrubby Yew	Podocarpus macrophyllus `Maki`	NO	36" HT. X 12" SPRD. @ 12" O.C.

SHRUB AREAS	QTY	COMMON NAME	BOTANICAL NAME	NATIVE	REMARKS
AC	98	Dwarf Elephant Ear	Alocasia odora `California`	NO	18" HT. X 18" SPRD. @ 18" O.C.
CV1	43	Sloppy Painter Croton	Codiaeum variegatum `Sloppy Painter`	NO	18" HT. X 18" SPRD. @ 24" O.C.
IR	144	Dwarf Maui Ixora	Ixora chinensis `Maui Yellow`	NO	18" HT. X 18" SPRD. @ 24" O.C.
PM	47	Podocarpus	Podocarpus macrophyllus	NO	4` HT., FULL TO BASE, @ 24" O.C.
FAK	96	Fakahatchee Grass	Tripsacum dactyloides	YES	24" HT. X 24" SPRD. @ 24" O.C.
ZI	114	Coontie	Zamia integrifolia	YES	24" HT. X 24" SPRD. @ 24" O.C.

GROUND COVERS	QTY	COMMON NAME	BOTANICAL NAME	NATIVE	REMARKS
A	23	Annuals	Annuals	NO	12" HT. X 12" SPRD. @ 12" O.C. Mixed Seasonal Color, Full Pots
AM2	172	Foxtail Fern	Asparagus densiflorus Myers	NO	18" HT. X 18" SPRD. @ 18" O.C.
CF	24	Dwarf Clusia	Clusia fluminensis	NO	18" HT. X 18" SPRD. @ 18" O.C.
FG	457	Green Island Ficus	Ficus microcarpa `Green Island`	NO	12" HT. X 12" SPRD. @ 18" O.C.
ILV	783	Dwarf Schillings Holly	Ilex vomitoria `Schillings Dwarf`	YES	12" HT. X 12" SPRD. @ 12" O.C.
LIE	197	Liriope	Liriope muscari `Emerald Goddess`	NO	12" HT. X 12" SPRD. @ 18" OC
POD3	660	Dwarf Podocarpus	Podocarpus macrophyllus `Dwarf Pringles`	NO	12" HT. X 12" SPRD. @ 12" O.C.
TF	90	Dwarf Fakahatchee Grass	Tripsacum floridana	YES	18" HT. X 18" SPRD. @ 24" O.C.

LANDSCAPE NOTES:

1. STRUCTURAL ELEMENTS AND HARDSCAPE FEATURES INDICATED ON LANDSCAPE PLANS ARE FOR INFORMATIONAL PURPOSES ONLY. LANDSCAPE PLANS ARE TO BE UTILIZED FOR LOCATION OF LIVING PLANT MATERIAL ONLY. LANDSCAPE PLANS SHOULD NOT BE UTILIZED FOR STAKING AND LAYOUT OR LOCATION OF ANY STRUCTURAL SITE FEATURES INCLUDING BUT NOT LIMITED TO: BUILDINGS, SIGNAGE, PATHWAYS, EASEMENTS, BERMS, WALL, FENCES, UTILITIES OR ROADWAYS.
2. CONTRACTOR SHALL ACQUIRE ALL APPLICABLE FEDERAL, STATE, LOCAL, JURISDICTIONAL OR UTILITY COMPANY PERMITS REQUIRED PRIOR TO REMOVAL, RELOCATION, AND/OR INSTALLATION OF LANDSCAPE MATERIALS INDICATED WITHIN PLAN DOCUMENTS. THE CONTRACTOR SHALL HAVE PERMITS "IN HAND" PRIOR TO STARTING WORK. LANDSCAPE ARCHITECT SHALL BEAR NO RESPONSIBILITY FOR WORK PERFORMED WITHOUT PERMITTED DRAWINGS. THE CONTRACTOR SHALL BE RESPONSIBLE FOR ALL CHANGES TO THE WORK, AT NO ADDITIONAL COST TO THE OWNER, AS A RESULT OF UNAUTHORIZED WORK PRIOR TO RECEIPT OF PERMIT.
3. TREES SHOWN ON THIS PLAN ARE FOR GRAPHIC REPRESENTATION ONLY. TREE SPACING IS BASED ON DESIGN REQUIREMENTS AND THE TREES SHOWN ON THESE PLANS ATTEMPT TO ACCOMPLISH THAT SPACING WHILE MAINTAINING THE REQUIRED SETBACKS FROM UTILITIES. IN THE EVENT OF A CONFLICT, AFFECTED PLANT MATERIAL SHALL BE FIELD ADJUSTED WITH THE APPROVAL OF THE LANDSCAPE ARCHITECT TO AVOID CONFLICTS WITH THE WITH EXISTING AND PROPOSED UTILITIES, LIGHT POLES, DRAINAGE STRUCTURES OR LINES, LAKE MAINTENANCE EASEMENTS OR OTHER AFFECTED SITE FEATURES.
4. ANY PLANTING WITHIN THE SIGHT TRIANGLES SHALL PROVIDE UNOBSTRUCTED VIEWS AT A LEVEL BETWEEN 30" AND 8' ABOVE THE PAVEMENT.
5. ALL UTILITY BOXES/ STRUCTURES TO BE SCREENED ON 3 SIDES W/ APPROVED PLANTING MATERIAL.
6. IRRIGATION IS REQUIRED PROVIDING 100% COVERAGE WITH A MAXIMUM OF 50% OVERLAP, AN AUTOMATIC RAIN SENSOR MUST BE INCLUDED.
7. ALL PLANT MATERIAL TO BE INSTALLED SHALL CONFORM TO FLORIDA POWER AND LIGHT'S (FPL'S) RIGHT TREE RIGHT PLACE GUIDELINES.
8. IN CASE OF DISCREPANCIES PLANS TAKE PRECEDENCE OVER PLANT LIST.
9. LANDSCAPE CONTRACTOR RESPONSIBLE FOR VERIFICATION OF ALL QUANTITIES PRIOR TO BIDDING.
10. REMOVAL OF EXISTING VEGETATION IS RESPONSIBILITY OF LANDSCAPE CONTRACTOR.
11. RELOCATION OF EXISTING VEGETATION IS RESPONSIBILITY OF LANDSCAPE CONTRACTOR. REFER TO SPECIFICATIONS FOR RELOCATION INSTRUCTIONS.
12. ALL PLANT MATERIAL TO BE FLORIDA GRADE #1 AT TIME OF INSTALLATION UNLESS OTHERWISE NOTED.

SHRUB AND GROUNDCOVER PLANTING DETAIL

NTS.

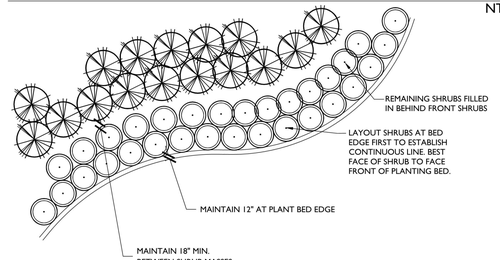

WGL
2035 Vista Parkway, West Palm Beach, FL 33411
Phone No. 866.909.2220 www.wglinc.com
Cert No. 6091 - LB No. 7055

REVISIONS

NO	DATE	DESCRIPTION	BY
1	6/15/2021	RESUBMITTAL	BJ
2	10/29/2021	RESUBMITTAL	BJ
3	11/30/2021	RESUBMITTAL	BJ
4	12/14/2021	RESUBMITTAL	BJ
5	5/11/2022	RESUBMITTAL	BJ

LANDSCAPE ARCHITECT OF RECORD
JASON L. MIHALOVITS. PLA FL#6667128

JOB NO.	5581.00
DRAWN BY	BJ
CHECK BY	JM
DATE	4/23/2021

BELMONT
VILLAGE OF PALM SPRINGS, FLORIDA
LANDSCAPE DETAILS

SHEET:
LP-500

Bryan Johnson P:\5500\5581.01 1581 Hyk Road - Land Dv\LA\Drawings\Landscape\LS5810-LA.dwg ——— Plotted: 5/10/2022 8:00:40 PM Saved: 5/10/2022 4:56:02 PM

Landscape Planting - Part I. General

I. Description of Work
A. Provide all exterior planting as shown on the drawings or inferable therefrom and/or as specified in accordance with the requirements of the Contract Documents. Landscape plans provided indicate the proposed location of living plant material only. Structural elements and hardscape features indicated on the landscape plans are for information purposes only. Landscape plans are not to be utilized for staking and layout or location of any structural site features including but not limited to, buildings, signage, pathways, easements, utilities or roadways.
B. These specifications include standards necessary for and incidental to the execution and completion of planting as indicated on the prepared drawings and specified herein.
C. All applicable federal, state and local permits shall be attained prior to the removal, relocation, or installation of plant materials indicated within the plan documents.
D. Protection of existing features. During construction, protect all existing trees, shrubs, and other specified vegetation, site features and improvements, structures, and utilities specified herein and/or on submitted drawings. Removal or destruction of existing plantings is prohibited unless specifically authorized by the owner, and with permit as required by associated federal, state and local government agencies.

II. Applicable Standards
A. American National Standards for Tree Care Operations, ANSI A300. American National Standards Institute, 11 West 42nd Street, New York, N.Y. 10036.
B. American Standard for Nursery Stock, ANSI Z60.1. American Nursery and Landscape Association, 1250 Eye Street. NW, Suite 500, Washington, D.C. 20005.
C. Hortus Third, The Staff of the L.H. Bailey Hortorium. 1976. MacMillan Publishing Co., New York.
D. Florida Department of Agriculture "Grades and Standards for Nursery Plants", most recent addition.
E. National Arborist Association- Pruning Standards for Shade Trees
F. All standards shall include the latest additions and amendments as of the date of advertisement for bids

III. Qualifications
A. Landscape planting and related work shall be performed by a firm with a minimum of five years experience specializing in this type of work. All contractors and their sub-contractors who will be performing any landscape work included in this section of the specification shall be approved by the landscape architect.
B. Landscape Contractor shall be licensed and shall carry any necessary insurance and shall protect the Landscape Architect and Owner against all liabilities, claims or demands for injuries or damage to any person or property growing out of the performance of the work under this contract. All workers shall be covered by Workman's Compensation Insurance.

IV. Requirements of Regulatory Agencies
A. Certificates of inspection shall accompany the invoice for each shipment of plants as may be required by law for transportation. File certificates with the landscape architect prior to acceptance of the material. Inspection by federal or state authorities at place of growth does not preclude rejection of the plants at the site.

V. Submittals
A. Manufacturer's Data: Submit copies of the manufacturer's and/or source data for all materials specified, including soils, soil amendments and fertilizer materials. Comply with regulations applicable to landscape materials.
B. Samples: Submit samples of all topsoil, soil mixes, mulches, and organic materials. Samples shall weigh 1 kg (2 lb) and be packaged in plastic bags. Samples shall be typical of the lot of material to be delivered to the site and provide an accurate indication of color, texture, and organic makeup of the material.
C. Nursery Sources: Submit a list of all nurseries that will supply plants, along with a list of the plants they will provide and the location of the nursery.
D. Soil Test: Submit soil test analysis report for each sample of topsoil and planting mix from a soil testing laboratory approved by the landscape architect.
1. Provide a particle size analysis, including the following gradient of mineral content:

USDA Designation	Size in mm
Gravel	>2 mm
Very Course Sand	1-2 mm
Coarse Sand	0.5-1 mm
Medium Sand	0.25-0.5 mm
Fine Sand	0.1-0.25 mm
Very fine sand	0.05-0.1 mm
Silt	0.002-0.05 mm
Clay	smaller than 0.002

2. Provide a chemical analysis, including the following:
a. pH and buffer pH
b. Percentage of organic content by oven-dried weight.
c. Nutrient levels by parts per million, including phosphorus, potassium magnesium, manganese, iron, zinc, and calcium. Nutrient test shall include the testing laboratory recommendations for supplemental additions to the soil based on the requirements of horticultural plants.
d. Soluble salt by electrical conductivity of a 1:2, soil: water, sample measured in millimho per cm.
e. Cation exchange capacity (CEC).
E. Material Testing: Submit the manufacturers particle size analysis, and the pH analysis and provide a description and source location for the content material of all organic materials.
F. Maintenance Instructions: Prior to the end of maintenance period, Landscape Contractor shall furnish three copies of written maintenance instructions to the Landscape Architect for transmittal to the Owner for maintenance and care of installed plants through their full growing season.

VI. Utility Verification
A. The contractor shall contact the local utility companies for verification of the location of all underground utility lines in the area of the work. The contractor shall be responsible for all damage resulting from neglect or failure to comply with this requirement.

Part 2. Materials

I. Plants
A. Plants shall be true to species and variety specified and nursery-grown in accordance with good horticultural practices under climatic conditions similar to those in the locality of the project for at least two years. They shall have been freshly dug.
1. All plant names and descriptions shall be as defined in Hortus Third.
2. All plants shall be grown and harvested in accordance with the American Standard for Nursery Stock and Florida Department of Agriculture Grades and Standards for Nursery Plants.
3. Unless approved by the landscape architect, plants shall have been grown at a latitude not more than 325 km (200 miles) north or south of the latitude of the project unless the provenance of the plant can be documented to be compatible with the latitude and cold hardiness zone of the planting location.
B. Unless specifically noted, all plants shall be exceptionally heavy, symmetrical, and so trained or favored in development and appearance as to be unquestionably and outstandingly superior in form, compactness, and symmetry. They shall be sound, healthy, vigorous, well branched, and densely foliated when in leaf; free of disease and insects, eggs, or larvae; and shall have healthy, well-developed root systems. They shall be free from physical damage or other conditions that would prevent vigorous growth.
1. Trees with multiple leaders, unless specified, will be rejected. Trees with a damaged or crooked leader, bark abrasions, sunscald, disfiguring knots, insect damage, or cuts of limbs over 20 mm (3/4 in.) in diameter that are not completely closed will be rejected.
C. Plants shall conform to the measurements specified, except that plants larger than those specified may be used if approved by the landscape architect. Use of larger plants shall not increase the contract price. If larger plants are approved, the root ball shall be increased in proportion to the size of the plant.
1. Caliper measurements shall be taken on the trunk 150 mm (6 in.) above the natural ground line for trees up to and including 100 mm (4 in.) in caliper, and 300 mm (12 in.) above the natural ground line for trees over 100 mm (4 in.) in caliper. Height and spread dimensions specified refer to the main body of the plant and not from branch tip to branch tip. Plants shall be measured when branches are in their normal position. If a range of sizes is given, no plant shall be less than the minimum size, and no less than 50 percent of the plants shall be as large as the maximum size specified. Measurements specified are minimum sizes acceptable after pruning, where pruning is required. Plants that meet measurements but do not possess a standard relationship between height and spread, according to the Florida Department of Agriculture Grades and Standards for Nursery Plants, shall be rejected.
D. Substitutions of plant materials will not be permitted unless authorized in writing by the landscape architect. If proof is submitted in writing that a plant specified is not obtainable, consideration will be given to the nearest available size or similar variety, with a corresponding adjustment of the contract price.
E. The plant schedule provided at the end of this section, or on the drawing, is for the contractor's information only, and no guarantee is expressed or implied that quantities therein are correct or that the list is complete. The contractor shall ensure that all plant materials shown on the drawings are included in his or her bid.
F. All plants shall be labeled by plant name. Labels shall be attached securely to all plants, bundles, and containers of plant materials when delivered. Plant labels shall be durable and legible, with information given in weather-resistant ink or embossed process lettering.
G. Selection and Tagging
1. Plants shall be subject to inspection for conformity to specification requirements and approval by the landscape architect at their place of growth and upon delivery. Such approval shall not impair the right of inspection and rejection during progress of the work.
2. A written request for the inspection of plant material at their place of growth shall be submitted to the landscape architect at least ten calendar days prior to digging. This request shall state the place of growth and the quantity of plants to be inspected. The landscape architect may refuse inspection at this time if, in his or her judgment, sufficient quantities of plants are not available for inspection or landscape architect deems inspection is not required.
3. All field grown deciduous trees shall be marked to indicate the trees north orientation in the nursery. Place a 1-in. diameter spot of white paint onto the north side of the tree trunk within the bottom 12 inches of the trunk.
H. Anti-Desiccants
1. Anti-desiccants, if specified, are to be applied to plants in full leaf immediately before digging or as required by the landscape architect. Anti-desiccants are to be sprayed so that all leaves and branches are covered with a continuous protective film.
I. Balled and Burlapped (B&B) Plant Materials
1. Trees designated B&B shall be properly dug with firm, natural balls of soil retaining as many fibrous roots as possible, in sizes and shapes as specified in the Florida Department of Agriculture Grades and Standards for Nursery Plants. Balls shall be firmly wrapped with synthetic, natural, or treated burlap, and/or wire. All synthetic fabric should be removed from the rootball prior to planting. True biodegradable burlap can be left around the root ball. The root collar shall be apparent at surface of ball. Trees with loose, broken, processed, or manufactured root balls will not be accepted, except with special written approval before planting.
J. Container Plants
1. Plants grown in containers shall be of appropriate size for the container as specified in the most recent edition of the Florida Department of Agriculture Grades and Standards for Nursery Plants and be free of circling roots on the exterior and interior of the root ball.
2. Container plants shall have been grown in the container long enough to have established roots throughout the growing medium.
K. Bareroot and Collected Plants
1. Plants designated as bareroot or collected plants shall conform to the American Standard for Nursery Stock.
2. Bareroot material shall not be dug or installed after bud break or before dormancy.
3. Collected plant material that has not been taken from active nursery operations shall be dug with a root ball spread at least 1/3 greater than nursery grown plants. When specified or approved, shall be in good health, free from disease, insect or weed infestation and shall not be planted before inspection and acceptance at the site. Testing may be required at the discretion of the Landscape Architect and/or the Owner and shall be provided at no additional cost.
L. Specimen Material: Plant material specified as specimens are to be approved by the Landscape Architect before being brought to the site. Unless otherwise noted on the drawings, these plants shall be Florida Fancy.
M. Palms
1. Coconut Palms shall be grown from a certified seed.
2. All palm species except Sabal palmetto shall have roots adequately wrapped before transporting.
3. Sabal palms shall have a hurricane cut. Sabal palms shall be installed on site at the earliest opportunity in the construction process. All Sabal palms shall be from Palm Beach County or other sandy soils. All Sabal palms shall be Florida Fancy.
4. For booted trunk palms, trunks shall have clean intact boots firmly attached to the palm trunk. For slick trunk palms, trunk shall be clear and free from defect and scars.
5. The Contractor shall treat all palms as required to prevent infestation by the palmetto weevil.
N. Sod
1. Sod shall be graded #1 or better. Sod shall be loam or muck grown with a firm, full texture and good root development. Sod shall be thick, healthy and free from defects and debris including but not limited to dead thatch, insects, fungus, diseases and contamination by weeds, other grass varieties or objectionable plant material.
2. Sod shall be sufficiently thick to insure a dense stand of live grass. Sod shall be live, fresh, and uninjured at the time of planting. Plant sod within 48 hours after harvesting.
3. Sod area shall be all areas not otherwise identified and shall include the area beyond the property line to the edge of pavement and/or edge of water.
O. Immediately after harvesting plants, protect from drying and damage until shipped and delivered to the planting site. Rootballs shall be checked regularly and watered sufficiently to maintain root viability.
P. Transportation and Storage of Plant Material
1. Branches shall be tied with rope or twine only, and in such a manner that no damage will occur to the bark or branches.
2. During transportation of plant material, the contractor shall exercise care to prevent injury and drying out of the trees. Should the roots be dried out, large branches broken, balls of earth broken or loosened, or areas of bark torn, the landscape architect may reject the injured tree(s) and order them replaced at no additional cost to the owner. All loads of plants shall be covered at all times with tarpaulin or canvas. Loads that are not protected will be rejected.
3. All bareroot stock sent from the storage facility shall be adequately covered with wet soil, sawdust, woodchips, moss, peat, straw, hay, or other acceptable moisture-holding medium, and shall be covered with a tarpaulin or canvas. Loads that are not protected in the above manner may be rejected.
4. Plants must be protected at all times from sun or drying winds. Those that cannot be planted immediately on delivery shall be kept in the shade, well protected with soil, wet mulch, or other acceptable material, and kept well watered. Plants shall not remain unplanted any longer than three days after delivery. Plants shall not be bound with wire or rope at any time so as to damage the bark or break branches. Plants shall be lifted and handled with suitable support of the soil ball to avoid damaging it.
Q. Mechanized Tree Spade Requirements
Trees may be moved and planted with an approved mechanical tree spade. The tree spade shall move trees limited to the maximum size allowed for a similar B&B root-ball diameter according to the American Standard for Nursery Stock or the manufacturer's maximum size recommendation for the tree spade being used, whichever is smaller. The machine shall be approved by the landscape architect prior to use. Trees shall be planted at the designated locations in the manner shown in the plans and in accordance with applicable sections of the specifications.

II Materials for Planting
A. Mulch: Except as otherwise specified, mulch shall be shredded Melaleuca mulch - grade "A". All Melaleuca mulch shall be made entirely from the wood and bark of the Melaleuca quinquinerva tree. It shall not contain more than 10% bark (by volume). Shreds and chips shall not be larger the ¾" diameter and 1½" in length. Mulch shall be free of weeds, seeds, and any other organic or inorganic material other than Melaleuca wood and bark. It shall not contain stones or other foreign material that will prevent its eventual decay. This shall be applied to all planted areas where indicated so that, after installation, the mulch thickness will not be less than 3". Submit sample for approval.
B. Peat: Shall be horticultural peat composed of not less than 60% decomposed organic matter by weight, on an oven dried basis. Peat shall be delivered to the site in a workable condition free from lumps.
C. Gravel Mulch: Use only where specifically indicated on the plans of the size and type shown. Unless otherwise specified it shall be water-worn, hard durable gravel, washed free of loam, sand, clay and other foreign substances. It shall be a minimum of 3" deep and shall be contained with edging or other approved gravel stop as indicated on the plans. It shall be a maximum of 1 1/2", a minimum of 3/4" and of a readily-available natural gravel color range. Provide geotextile filter fabric below aggregate rock.
Submit sample for approval.
D. Root Barrier: Where specified, root barriers shall be installed on all tree and palm material in accordance with the root barrier detail provided within the plan drawings. Root barriers shall comply with all requirements of the municipality within which they are located as well as with any utility holder requirements of any affected utilities. In the event that conflicting requirements exist between the root barrier detail provided within the plan documents and the municipality/utility holder requirements, the more stringent of the requirements shall be applicable.
E. Planter Edging: Use only where specifically indicated on plans. Edging shall be the color black.
F. Anti-desiccant: shall be an emulsion specifically manufactured for agricultural use, which provides a protective film over plant surfaces. Anti-desiccants shall be delivered in containers of the manufacturer and shall be mixed according to the manufacturer's directions. Submit manufacturer literature for approval.

III. Materials for Soil Amendment
A. Pine Bark: Horticultural-grade milled pine bark, with 80 percent of the material by volume sized between 0.1 and 15.0 mm.
1. Pine bark shall be aged sufficiently to break down all woody material. Pine bark shall be screened.
2. pH shall range between 4 and 7.0.
3. Submit manufacturer literature for approval.
B. Organic Matter: Leaf matter and yard waste composted sufficiently to break down all woody fibers, seeds, and leaf structures, and free of toxic and nonorganic matter. Organic matter shall be commercially prepared compost. Submit 0.5 kg (1 lb) sample and suppliers literature for approval.
C. Course Sand: Course concrete sand, ASTM C-33 Fine Aggregate, with a Fines Modulus Index of 2.75 or greater.
1. Sands shall be clean, sharp, natural sands free of limestone, shale and slate particles.
2. Provide the following particle size distribution:

Sieve	Percentage Passing
3/8 in (9.5 mm)	100
No. 4 (4.75 mm)	95-100
No. 8 (2.36 mm)	80-100
No. 16 (1.18 mm)	50-85
No. 30 (0.60 mm)	25-60
No. 50 (0.30 mm)	10-30
No. 100 (0.15 mm)	2-10

D. Lime: shall be ground, palletized, or pulverized lime manufactured to meet agricultural standards and contain a maximum of 60 percent oxide (i.e. calcium oxide plus magnesium oxide). Submit manufacturer literature for approval.
E. Sulfur: shall be flowers of sulfur, pelletized or granular sulfur, or iron sulfate. Submit manufacturer literature for approval.
F. Fertilizer: Agricultural fertilizer of a formula indicated by the soil test. Fertilizers shall be organic, slow-release compositions whenever applicable. Submit manufacturer literature for approval.

IV. Planting Mix
A. Planting Mix
1. Planting Mix for Trees, Shrubs, Groundcovers and vines: Check with landscape architect for appropriate mixture.
2. Planting Mix for Palms: Mixture of course sand and peat mixed to the following proportion:

Component	Percent by Volume
Coarse Sand	75%
Peat	25%

B. Planting mix shall be thoroughly mixed, screened, and shredded.
C. Prior to beginning the mixing process, submit a 1-kg (2-lb) sample of the proposed mix with soil test results that indicate the mix ratio and the results achieved.
D. During the mixing process but prior to installing the mix, submit a 1-kg (2-lb) sample for each 200 cubic meters (250 cubic yards) of planting mix, taken randomly from the finished soil mix, with soil test results for approval. In the event that the test results do not meet the required particle size distribution, remix and resubmit a revised planting mix.
E. Make all amendments of lime/sulfur and fertilizer indicated by the soil test results at the time of mixing.
F. All mixing shall take place in the contractors yard, using commercial mixing equipment sufficient to thoroughly mix all components uniformly
G. Protect the planting mix from erosion prior to installation.

Part 3. Execution

I. Excavation of Planted Areas
A. Locations for plants and/or outlines of areas to be planted are to be staked out at the site. Locate and mark all subsurface utility lines. Approval of the stakeout by the landscape architect is required before excavation begins.
B. Tree, shrub, and groundcover beds are to be excavated to the depth and widths indicated on the landscape plan detail drawings. If the planting area under any tree is initially dug too deep, the soil added to bring it up to the correct level should be thoroughly tamped.
1. The sides of the excavation of all planting areas shall be sloped at a 45 degrees. The bottom of all beds shall slope parallel to the proposed grades or toward any subsurface drain lines within the planting bed. The bottom of the planting bed directly under any tree shall be horizontal such that the tree sits plumb.
2. Maintain all required angles of repose of the adjacent materials as shown on the drawings. Do not excavate compacted subgrades of adjacent pavement or structures.
3. Subgrade soils shall be separated from the topsoil, removed from the area, and not used as backfill in any planted or lawn area. Excavations shall not be left uncovered or unprotected overnight.
C. For trees and shrubs planted in individual holes in areas of good soil that is to remain in place and/or to receive amendment in the top 150-mm (6 in.) layer, excavate the hole to the depth of the root ball and to widths shown on the drawing. Slope the sides of the excavation at a 45 degree angle up and away from the bottom of the excavation.
1. In areas of slowly draining soils, the root ball may be set up to 75 mm (3 in.) or 1/8 of the depth of the root ball above the adjacent soil level.
2. Save the existing soil to be used as backfill around the tree.
3. On steep slopes, the depth of the excavation shall be measured at the center of the hole and the excavation dug as shown on the drawings.
D. Detrimental soil conditions: The landscape architect is to be notified, in writing, of soil conditions encountered, including poor drainage, that the contractor considers detrimental to the growth of plant material. When detrimental conditions are uncovered, planting shall be discontinued until instructions to resolve the conditions are received from the landscape architect.
E. Obstructions: If rock, underground construction work, utilities, tree roots, or other obstructions are encountered in the excavation of planting areas, alternate locations for any planting shall be determined by the landscape architect.

II. Installation of Planting Mix
A. Prior to the installation of the planting mix, install subsurface drains, irrigation main lines, lateral lines, and irrigation risers shown on the drawings.
B. The landscape architect shall review the preparation of subgrades prior to the installation of planting mix.
C. Do not proceed with the installation of planting mix until all utility work in the area has been installed.
D. Protect adjacent walls, walks, and utilities from damage or staining by the soil. Use 12-mm (1/2 in.) plywood and/or plastic sheeting as directed to cover existing concrete, metal, masonry work, and other items as directed during the progress of the work.
1. Clean up any soil or dirt spilled on any paved surface at the end of each working day.
2. Any damage to the paving or architectural work caused by the soils installation contractor shall be repaired by the general contractor at the soils installation contractors expense.
E. Till the subsoil into the bottom layer of topsoil or planting mix.
1. Loosen the soil of the subgrade to a depth of 50 to 75 mm (2 to 3 in.) with a rototiller or other suitable device.
2. Spread a layer of the specified topsoil or planting mix 50 mm (2 in.) deep over the subgrade. Thoroughly till the planting mix and the subgrade together.
3. Immediately install the remaining topsoil or planting mix in accordance with the following specifications. Protect the tilled area from traffic. DO NOT allow the tilled subgrade to become compacted.
4. In the event that the tilled area becomes compacted, till the area again prior to installing the planting mix.
F. Install the remaining topsoil or planting mix in 200- to 250-mm (8- to 10-in.) lifts to the depths and shown on the drawing details. The depths and grades shown on the drawings are the final grades after soil settlement and shrinkage of the organic material. The contractor shall install the soil at a higher level to anticipate this reduction of soil volume, depending on predicted settling properties for each type of soil.
1. Phase the installation of the soil such that equipment does not have to travel over already-installed topsoil or planting mixes.
2. Compact each lift sufficiently to reduce settling but not enough to prevent the movement of water and feeder roots through the soil. The soil in each lift should feel firm to the foot in all areas and make only slight heel prints. Overcompaction shall be determined by the following field percolation test.
a. Dig a hole 250 mm (10 in.) in diameter and 250 mm (10 in.) deep.
b. Fill the hole with water and let it drain completely. Immediately refill the hole with water, and measure the rate of fall in the water level.
c. In the event that the water drains at a rate less than 25 mm (1 in.) per hour, till the soil to a depth required to break the overcompaction.
d. The landscape architect shall determine the need for, and the number and location of percolation tests based on observed field conditions of the soil.
3. Maintain moisture conditions within the soils during installation to allow for satisfactory compaction. Suspend installation operations if the soil becomes wet. Do not place soils on wet subgrade.
4. Provide adequate equipment to achieve consistent and uniform compaction of the soils. Use the smallest equipment that can reasonably perform the task of spreading and compaction.
5. Add lime, sulfur, fertilizer, and other amendments during soil installation. Spread the amendments over the top layer of soil and till into the top 100 mm (4 in.) of soil. Soil amendments may be added at the same time that organic matter, when required, is added to the top layer of soil.
6. Protect soil from overcompaction after placement. An area that becomes overcompacted shall be tilled to a depth of 125 mm (6 in.). Uneven or settled areas shall be filled and regraded.

III. Fine Grading
A. It shall be the responsibility of the Contractor to finish grade (min. 6" below adjacent F.F.E.). Finish grades in planting areas shall be one inch lower than adjacent paving and are to include 3" of mulching. New earthwork shall blend smoothly into the existing earthwork, and grades shall pitch evenly between spot grades. All planted areas must pitch to drain at a minimum of 1/4" per foot. Any discrepancies not allowing this to occur shall be reported to the Landscape Architect prior to continuing work.
B. Fill all dips and remove any bumps in the overall plane of the slope.
1. The tolerance for dips and bumps in lawn areas shall be a 12-mm (1/2 in.) deviation from the plane in 3,000 mm (10 ft).
2. The tolerance for dips and bumps in shrub planting areas shall be a 25-mm (1 in.) deviation from the plane in 3,000 mm (10 ft).
3. All fine grading shall be inspected and approved by the landscape architect prior to planting, mulching, sodding, or seeding.
C. Berming shall not be placed within 10' of any existing tree nor will it be allowed to encroach upon any utility, drainage, or maintenance easement. Berming shall not impede or obstruct any necessary swales needed to drain other areas for the property.

IV. Planting Operations
A. Plants shall be set on flat-tamped or unexcavated pads at the same relationship to finished grade as they were to the ground from which they were dug, unless otherwise noted on the drawings. Plants must be set plumb and braced in position until topsoil or planting mix has been placed and tamped around the base of the root ball. Improper compacting of the soil around the root ball may result in the tree settling or leaning. Plants shall be set so that they will be at the same depth and so that the root ball does not shift or move laterally one year later.
1. Determine the elevation of the root flare and ensure that it is planted at grade. This may require that the tree be set higher than the grade in the nursery.
2. If the root flare is less than 50 mm (2 in.) below the soil level of the root ball, plant the tree the appropriate level above the grade to set the flare even with the grade. If the flare is more than 50 mm (2 in) at the center of the root ball the tree shall be rejected.
B. Lift plants only from the bottom of the root balls or with belts or lifting harnesses of sufficient width not to damage the root balls. Do not lift trees by their trunk or use the trunk as a lever in positioning or moving the tree in the planting area.
C. Remove plastic, paper, or fiber pots from containerized plant material. Pull roots out of the root mat. Loosen the potting medium and shake away from the root mat. Immediately after removing the container, install the plant such that the roots do not dry out. Pack planting mix around the exposed roots while planting.
D. The roots of bare-root trees shall be pruned at the time of planting to remove damaged or undesirable roots (those likely to become a detriment to future growth of the root system). Bare-root trees shall have the roots spread to approximate the natural position of the roots and shall be centered in the planting pit. The planting-soil backfill shall be worked firmly into and around the roots, with care taken to fill in completely with no air pockets.
E. Cut ropes or strings from the top of shrub root balls and trees smaller than 3 in. caliper after plant has been set. Remove burlap or cloth wrapping and any wire baskets from around top half of balls. Do not turn under and bury portions of burlap at top of ball.
1. Do not immediately remove the ropes and burlap from trees larger than 3 in. caliper. Return to each tree three months after planting and cut all ropes around the trunks and tops of the root balls of these trees.
2. Completely remove any waterproof or water-repellant strings or wrappings from the root ball and trunk before backfilling.
F. Set balled and burlapped trees in the hole with the north marker facing north unless otherwise approved by the landscape architect.
G. Place native soil, topsoil, or planting mix into the area around the tree, tamping lightly to reduce settlement.
1. For plants planted in individual holes in existing soil, add any required soil amendments to the soils, as the material is being backfilled around the plant. Ensure that the amendments are thoroughly mixed into the backfill.
2. For plants planted in large beds of prepared soil, add soil amendments during the soil installation process.
3. Ensure that the backfill immediately around the base of the root ball is tamped with foot pressure sufficient to prevent the root ball from shifting or leaning.
H. Solid sod shall be laid with closely abutting joints with a tamped or rolled, even surface. Stagger strips to offset joints in adjacent courses. Bring the sod edge in a neat, clean manner to the edge of all paving and shrub areas. Sod along slopes shall be pegged to hold sod in place along slopes or banks a wood peg acceptable to the Landscape Architect shall be used at no additional cost to the Owner. If, in the opinion of the Landscape Architect, top-dressing is necessary after rolling, clean sand will be evenly applied over the entire surface and thoroughly washed in without additional charge.
I. Thoroughly water all plants immediately after planting. Apply water by hose directly to the root ball and the adjacent soil.
J. Remove all tags, labels, strings, etc. from all plants.
K. Remove any excess soil, debris, and planting material from the job site at the end of each workday.
L. Form watering saucers 100 mm (4 in.) high immediately outside the area of the root ball of each tree as indicated on the drawings.

V. Relocation of Existing Material:
A. Landscape Contractor shall root prune trees which are to be relocated in accordance with approved horticultural practices and the following procedures.
1. Select a healthy tree
2. Selectively trim the canopy removing dead limbs, cross branching over crowned areas, and lower undesirable limbs. Fertilize and water trees before pruning.
3. Root prune 50% of the root system approximately 18"-2' deep (depending upon species and size). This is done by hand with sharp hand tools or a root pruning saw. The diameter of the root ball to be pruned is 8-12 inches per every one inch of diameter at breast height of the tree.
4. Back fill the existing soil with peat moss to stimulate new root growth of the pruned roots.
5. Water in thoroughly and treat with a mycorrhizae and a low nitrogen fertilizer (so not to burn the pruned roots). Brace trees if deemed necessary.
6. The root pruned tree should be watered every day (especially during warm months of the season), the equivalent of 5 gallons for every DBH of tree per day.
7. Root pruned trees should be let to stand for a minimum of 6 weeks for trees less than 8" DBH and as long as 3 months for larger specimens prior to transplanting.
8. For best results and survivorship, new root growth should be evident on root pruned trees prior to transplanting.
9. Upon transplanting, water should be applied every day as outlined in step 6 for at least one year.

VI. Staking and Guying
A. The Contractor shall stake all trees and palms in accordance with the tree and palm staking details provided within the plan drawings. Alternate methods of guying or staking may be employed with the prior approval of the Landscape Architect.
B. The Contractor shall be responsible for the replacement or adjustment of all trees, palms or shrubs that fall or lean during the guarantee period. The Contractor shall be responsible for any damage caused by the falling or leaning of trees.
C. Stakes and guys shall be installed immediately upon approval or planting, and shall be removed in accordance with the staking details provide within the plan drawings. Any tree that is not stable at the end of the warranty period shall be rejected.

VII. Pruning
A. Plants shall not be heavily pruned at the time of planting. Pruning is required at planting time to correct defects in the tree structure, including removal of injured branches, waterspouts, suckers, and interfering branches. Healthy lower branches and interior small twigs should not be removed except as necessary to clear walks and roads. In no case should more than one-quarter of the branching structure be removed. Retain the normal or natural shape of the plant.
B. All pruning shall be completed using clean, sharp tools. All cuts shall be clean and smooth, with the bark intact with no rough edges or tears.
C. Pruning of large trees shall be done from a hydraulic man-lift such that it is not necessary to climb the tree.

VIII. Mulching
A. All trees, palms, shrubs, and other plantings will be mulched with mulch previously approved by the landscape architect. The mulch shall be a minimum 3" thick layer over all tree, shrub and ground cover planting areas, unless otherwise specified. All mulch layers shall be of the specified thickness at the time of the final acceptance of the work. Mulch must not be placed within 3 inches of the trunks of trees, palms or shrubs.
B. Place mulch at least 3" in depth in a circle around all trees located in lawn areas. The diameter of the circle shall be 18" in diameter larger than the ball of the plant provided. Mulch must not be placed within 3 inches of the trunks of trees, palms or shrubs.

IX. Maintenance of Trees, Shrubs, and Vines
A. Maintenance shall begin immediately after each plant is planted and continue until its acceptance has been confirmed by the landscape architect.
B. Maintenance shall consist of pruning, watering, cultivating, weeding, mulching, fertilizing, tightening and repairing guys and stakes, resetting plants to proper grades or upright position, restoring of the planting saucer, and furnishing and applying such sprays or other materials as necessary to keep plantings free of insects and diseases and in vigorous condition.
C. Planting areas and plants shall be protected at all times against trespassing and damage of all kinds for the duration of the maintenance period. If a plant becomes damaged or injured, it shall be treated or replaced as directed by the landscape architect at no additional cost.
D. Watering: Contractor shall irrigate as required to maintain vigorous and healthy tree growth. Overwatering or flooding shall not be allowed. The contractor shall monitor, adjust, and use existing irrigation facilities, if available, and furnish any additional material, equipment, or water to ensure adequate irrigation. Root balls of all trees and large shrubs shall be spot watered using handheld hoses during the first four months after planting, as required to ensure adequate water within the root ball.
E. During periods of restricted water usage, all governmental regulations (permanent and temporary) shall be followed. The contractor may have to transport water from ponds or other sources, at no additional cost to the owner when irrigation systems are unavailable.
F. Remove soil ridges from around watering basins prior to end of maintenance period, as directed by Landscape Architect

X. Acceptance
A. The landscape architect shall inspect all work for acceptance upon written request of the contractor. The request shall be received at least ten calendar days before the anticipated date of inspection.
B. Acceptance of plant material shall be for general conformance to specified size, character, and quality and shall not relieve the contractor of responsibility for full conformance to the contract documents, including correct species.
C. Upon completion and re-inspection of all repairs or renewals necessary in the judgment of the landscape architect, the landscape architect shall certify in writing that the work has been accepted.

XI. Acceptance in Part
A. Work may be accepted in parts when the landscape architect and contractor deem that practice to be in their mutual interest. Approval must be given in writing by the landscape architect to the contractor verifying that the work is to be completed in parts. Acceptance of work in parts shall not waive any other provision of this contract.

XII. Guarantee Period and Replacements
A. The guarantee period for trees and shrubs shall begin at the date of acceptance.
B. The contractor shall guarantee all plant material to be in healthy and flourishing condition for a period of one year from the date of acceptance.
C. When work is accepted in parts, the guarantee periods extend from each of the partial acceptances to the terminal date of the guarantee of the last acceptance. Thus, all guarantee periods terminate at one time.
D. The contractor shall replace, without cost, as soon as weather conditions permit, and within a specified planting period, all plants determined by the landscape architect to be dead or in an unacceptable condition during and at the end of the guarantee period. To be considered acceptable, plants shall be free of dead or dying branches and branch tips and shall bear foliage of normal density, size, and color. Replacements shall closely match adjacent specimens of the same species. Replacements shall be subject to all requirements stated in this specification.
E. The guarantee of all replacement plants shall extend for an additional period of one year from the date of their acceptance after replacement. In the event that a replacement plant is not acceptable during or at the end of said extended guarantee period, the landscape architect may elect subsequent replacement or credit for that item.
F. At the end of the guarantee, the contractor shall reset grades that have settled below the proposed grades on the drawings.
G. The contractor shall make periodic inspections, at no extra cost, during the guarantee period to determine what changes, if any, should be made in the maintenance program. If changes are recommended, they shall be submitted in writing to the landscape architect. Claims by the contractor that the owners maintenance practices or lack of maintenance resulted in dead or dying plants will not be considered if such claims have not been documented by the contractor during the guarantee period.

XIII. Final Inspection and Final Acceptance
At the end of the guarantee period and upon written request of the contractor, the landscape architect will inspect all guaranteed work for final acceptance. The request shall be received at least ten calendar days before the anticipated date for final inspection. Upon completion and re-inspection of all repairs or renewals necessary in the judgment of the landscape architect at that time, the landscape architect shall certify, in writing, that the project has received final acceptance.

WGL
2035 Vista Parkway, West Palm Beach, FL 33411
Phone No. 866.909.2220 www.wglinc.com
Cert No. 6091 - LB No. 7055

REVISIONS

NO	DATE	DESCRIPTION	BY
1	6/15/2021	RESUBMITTAL	BJ
2	8/13/2021	RESUBMITTAL	BJ
3	10/29/2021	RESUBMITTAL	BJ
4	12/14/2021	RESUBMITTAL	BJ
5	5/11/2022	RESUBMITTAL	BJ

558I.00
BJ
JM
4/23/2021

LANDSCAPE ARCHITECT OF RECORD
JASON L. MIHALOVITS, PLA FL#6667128

JOB NO.
DRAWN BY
CHECK BY
DATE

BELMONT
VILLAGE OF PALM SPRINGS, FLORIDA
LANDSCAPE SPECIFICATIONS

SHEET:
LP-600

Bryan Jodimon P:\558I\558I.01 16th Ave - Land Dv\LA\Drawings\Landscape\558100-LA.dwg ——— Plotted: 5/10/2022 8:00:40 PM Saved: 5/10/2022 8:00:40 PM

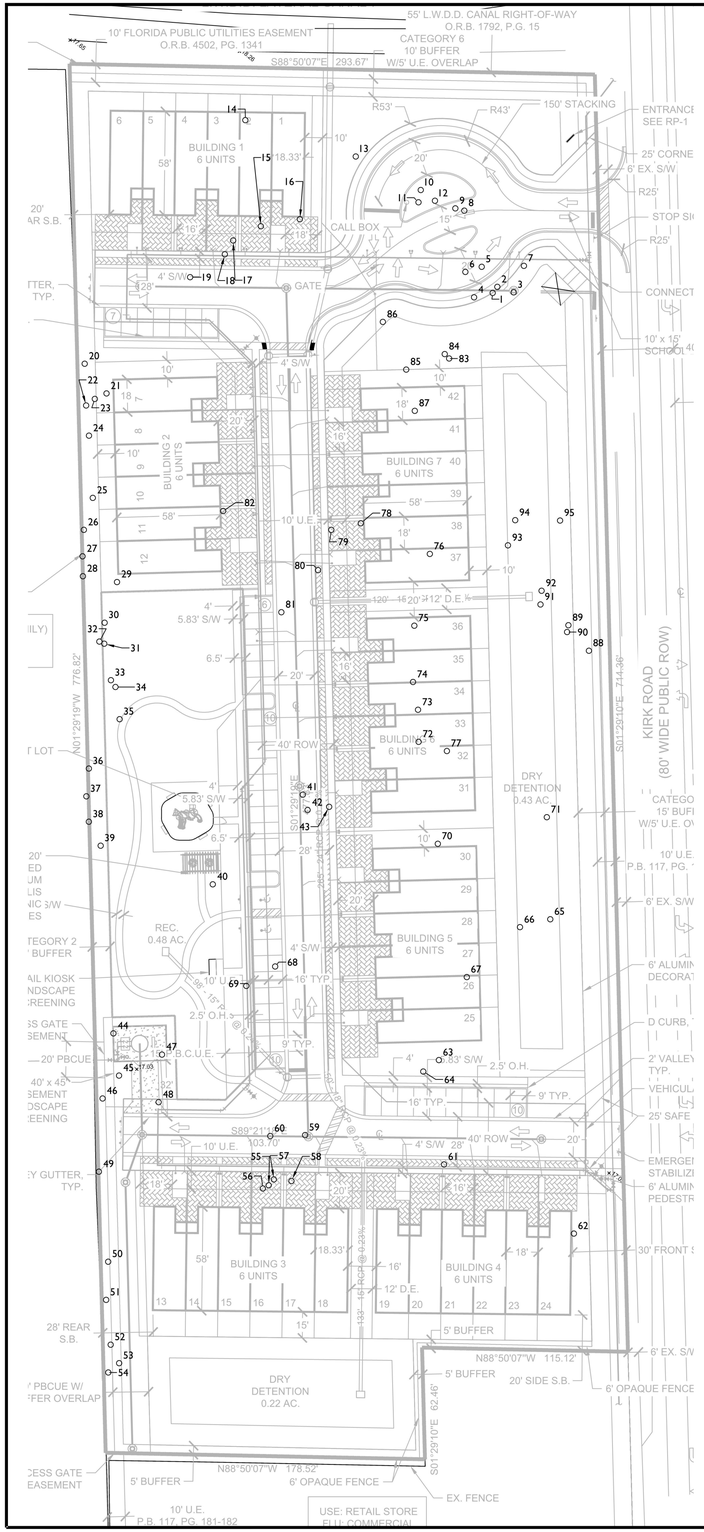

Tag #	Common Name	Scientific Name	DBH (inches)	Disposition	Notes
1	Sabal Palm	*Sabal palmetto*	16	Remove	Good
2	Sabal Palm	*Sabal palmetto*	16	Remove	Good
3	Sabal Palm	*Sabal palmetto*	14	Remove	
4	Live Oak	*Quercus virginiana*	6	Remove	
5	Live Oak	*Quercus virginiana*	6	Remove	
6	Live Oak	*Quercus virginiana*	9	Remove	
7	Slash Pine	*Pinus elliottii*	22	Remove	Good
8	Sabal Palm	*Sabal palmetto*	5	Remove	
9	Sabal Palm	*Sabal palmetto*	16	Remove	Vine intrusion
10	Sabal Palm	*Sabal palmetto*	12	Remove	
11	Sabal Palm	*Sabal palmetto*	10	Remove	
12	Sabal Palm	*Sabal palmetto*	12	Remove	
13	Slash Pine	*Pinus elliottii*	19	Remove	
14	Areca Palm	*Chrysalidocarpus lutescens*	8	Remove	
15	Sabal Palm	*Sabal palmetto*	12	Remove	
16	Sabal Palm	*Sabal palmetto*	18	Remove	
17	Sabal Palm	*Sabal palmetto*	16	Remove	
18	Sabal Palm	*Sabal palmetto*	10	Remove	
19	Sabal Palm	*Sabal palmetto*	14	Remove	
20	Weeping fig	*Ficus benjamina*	40	Preserve	
21	Sabal Palm	*Sabal palmetto*	16	Remove	
22	Slash Pine	*Pinus elliottii*	22	Preserve	
23	Areca Palm	*Chrysalidocarpus lutescens*	8	Remove	
24	Weeping fig	*Ficus benjamina*	10	Preserve	
25	Weeping fig	*Ficus benjamina*	38	Preserve	Growing into fence
26	Weeping fig	*Ficus benjamina*	24	Preserve	Growing into fence
27	Weeping fig	*Ficus benjamina*	14	Preserve	Growing into fence
28	Weeping fig	*Ficus benjamina*	14	Preserve	Growing into fence
29	Weeping fig	*Ficus benjamina*	5	Remove	
30	Weeping fig	*Ficus benjamina*	6	Remove	
31	Weeping fig	*Ficus benjamina*	7	Remove	
32	Weeping fig	*Ficus benjamina*	7	Remove	
33	Slash Pine	*Pinus elliottii*	20	Remove	Ficus intrusion
34	Weeping fig	*Ficus benjamina*	10	Remove	
35	Weeping fig	*Ficus benjamina*	5	Remove	
36	Weeping fig	*Ficus benjamina*	26	Preserve	Growing into fence
37	Weeping fig	*Ficus benjamina*	16	Preserve	Growing into fence
38	Weeping fig	*Ficus benjamina*	34	Preserve	Growing into fence
39	Weeping fig	*Ficus benjamina*	24	Preserve	Growing into fence
40	Slash Pine	*Pinus elliottii*	23	Remove	
41	Sabal Palm	*Sabal palmetto*	12	Remove	
42	Sabal Palm	*Sabal palmetto*	12	Remove	
43	Sabal Palm	*Sabal palmetto*	16	Remove	
44	Sabal Palm	*Sabal palmetto*	8	Remove	
45	Sabal Palm	*Sabal palmetto*	5	Remove	
46	Sabal Palm	*Sabal palmetto*	8	Remove	
47	Areca Palm	*Chrysalidocarpus lutescens*	10	Remove	
48	Slash Pine	*Pinus elliottii*	29	Remove	
49	Live Oak	*Quercus virginiana*	16	Preserve	Codominant, growing into fence
50	Live Oak	*Quercus virginiana*	16	Preserve	Growing into fence
51	Weeping fig	*Ficus benjamina*	22	Preserve	
52	Weeping fig	*Ficus benjamina*	28	Preserve	Growing into fence
53	Slash Pine	*Pinus elliottii*	14	Remove	Ficus intrusion
54	Weeping fig	*Ficus benjamina*	19	Preserve	Growing into fence
55	Christmas Palm	*Adonidia merrillii*	16	Remove	
56	Bottle Palm	*Hyophorbe lagenicaulis*	7	Remove	
57	Bottle Palm	*Hyophorbe lagenicaulis*	6	Remove	
58	Areca Palm	*Chrysalidocarpus lutescens*	12	Remove	
59	Areca Palm	*Chrysalidocarpus lutescens*	14	Remove	
60	Areca Palm	*Chrysalidocarpus lutescens*	14	Remove	
61	Live Oak	*Quercus virginiana*	4	Remove	
62	Weeping fig	*Ficus benjamina*	10	Remove	
63	Areca Palm	*Chrysalidocarpus lutescens*	5	Remove	
64	Areca Palm	*Chrysalidocarpus lutescens*	4.5	Remove	
65	Christmas Palm	*Adonidia merrillii*	6	Remove	Double
66	Christmas Palm	*Adonidia merrillii*	5	Remove	Double, one half is dead
67	Pygmy Date Palm	*Phoenix roebelenii*	5	Remove	Triplet
68	Christmas Palm	*Adonidia merrillii*	10	Remove	Double
69	Christmas Palm	*Adonidia merrillii*	9	Remove	
70	Queen Palm	*Syagrus romanzoffianum*	13	Remove	
71	Live Oak	*Quercus virginiana*	23	Remove	
72	Christmas Palm	*Adonidia merrillii*	6	Remove	
73	Christmas Palm	*Adonidia merrillii*	6	Remove	Triplet
74	Christmas Palm	*Adonidia merrillii*	5	Remove	Triplet
75	Christmas Palm	*Adonidia merrillii*	6	Remove	Triplet
76	Slash Pine	*Pinus elliottii*	19	Remove	
77	Slash Pine	*Pinus elliottii*	18	Remove	
77	Slash Pine	*Pinus elliottii*	18	Remove	
78	Slash Pine	*Pinus elliottii*	15	Remove	
79	Slash Pine	*Pinus elliottii*	15	Remove	
80	Live Oak	*Quercus virginiana*	14	Remove	
81	Live Oak	*Quercus virginiana*	23	Remove	
82	Slash Pine	*Pinus elliottii*	34	Remove	
83	Slash Pine	*Pinus elliottii*	17	Remove	
84	Sabal Palm	*Sabal palmetto*	12	Remove	
85	Sabal Palm	*Sabal palmetto*	16	Remove	
86	Sabal Palm	*Sabal palmetto*	14	Remove	
87	Slash Pine	*Pinus elliottii*	15	Remove	
88	Slash Pine	*Pinus elliottii*	14	Preserve	
89	Slash Pine	*Pinus elliottii*	12	Remove	
90	Slash Pine	*Pinus elliottii*	19	Remove	
91	Slash Pine	*Pinus elliottii*	16	Remove	
92	Slash Pine	*Pinus elliottii*	13	Remove	
93	Slash Pine	*Pinus elliottii*	15	Remove	
94	Slash Pine	*Pinus elliottii*	19	Remove	
95	Slash Pine	*Pinus elliottii*	17	Remove	
			Hardwoods Preserved:	17	

0 20 40 80
SCALE: 1" = 40'

NORTH

WGI
2035 Vista Parkway, West Palm Beach, FL 33411
Phone No. 866.909.2220 www.wginc.com
Cert No. 6091 - LB No. 7055

NO.	DATE	REVISIONS DESCRIPTION	BY
1	08/13/2021		KLN
2	10/26/2021		RMH
3	12/13/2021		KLN
4	5/11/2022	UPDATE SITE PLAN BASE	RMH

CAD 5581.01_EV-MAPS.DWG
DRAWN/DESIGNED KLN
CHECKED/QC RMH
JOB NO. 5581.01
DATE 06/03/2021

PROJECT: BELMONT

TASK: TREE INVENTORY PLAN

SHEET: TI.1

Rick Harmon P:\5500\5581.01 159 Kirk Road – Land Dp\DWG\CAD\5581.01_EV-MAPS.dwg ----- Rotted: 5/11/2022 11:21:21 AM Saved: 12/13/2021 4:43:41 PM

Calculation Summary - Horizontal

Calculation summary							
Label		Units	Avg	Max	Min	Avg/Min	Max/Min
Prop Line A	Illuminance	Fc	0.03	0.1	0.0	N.A.	N.A.
Prop Line B	Illuminance	Fc	0.04	0.1	0.0	N.A.	N.A.
Prop Line C	Illuminance	Fc	0.00	0.0	0.0	N.A.	N.A.
Prop Line D	Illuminance	Fc	0.03	0.2	0.0	N.A.	N.A.
Sidewalk A1	Illuminance	Fc	0.84	1.9	0.2	4.2	9.50
Sidewalk A2	Illuminance	Fc	1.21	2.3	0.1	12.1	23.00
Sidewalk A3	Illuminance	Fc	0.94	2.1	0.2	4.70	10.5
Sidewalk B1	Illuminance	Fc	1.32	2.0	0.9	1.47	2.22
Sidewalk B2	Illuminance	Fc	1.02	2.1	0.4	2.55	5.25
Sidewalk B3	Illuminance	Fc	1.18	2.2	0.4	2.95	5.5
Sidewalk Mail Kiosk	Illuminance	Fc	1.64	1.7	1.6	1.03	1.06
Sidewalk Park	Illuminance	Fc	0.86	2.6	0.1	8.60	26.00
Street A	Illuminance	Fc	0.94	2	0.3	3.13	6.67
Street B	Illuminance	Fc	0.96	1.9	0.3	3.2	6.33

Calculation Summary - Vertical @ 6 FT

Calculation summary							
Label		Units	Avg	Max	Min	Avg/Min	Max/Min
Vert Prop Line A	Illuminance	Fc	0.1	0.3	0.0	N.A.	N.A.
Vert Prop Line B	Illuminance	Fc	0.14	0.3	0.0	N.A.	N.A.
Vert Prop Line C	Illuminance	Fc	0.00	0.0	0.0	N.A.	N.A.
Vert Prop Line D	Illuminance	Fc	0.03	0.2	0.0	N.A.	N.A.

LIGHT FIXTURE SCHEDULE

TYPE	MANUFACTURER	FIXTURE CATALOG NO.	LAMPS		FIXTURE WATTS	MOUNTING	REMARKS
			LAMP #	LAMP TYPE			
S1	GE CURRENT	EPTT-01-0-3-A-N-30-P	1	LED, 3000K, 3500 LUMENS	30 W	20' POLE 15' 6" MH	POST TOP LED FIXTURE.

(d) *Standards.*

(1) *Confinement.* All outdoor lighting shall utilize full cutoff luminaries per the Illuminating Engineering Society of North America (IESNA) definition of full cutoff which allows for zero percent of lumens above 90 degrees from nadir. No luminaries other than landscape lighting exempted per subparagraph (b)(3)d. above, shall be directed upwards to avoid urban sky glow.

(2) *Light trespass.* The maximum illumination at the property line of an adjoining residential parcel or public ROW is 0.33 horizontal and vertical foot-candles measured at six feet above grade level. Said illumination likewise measured at the property line of an adjoining non-residential parcel, shall not exceed 3.0 horizontal and vertical foot-candles measured at six feet above grade level.

(3) *Security lighting and time restrictions.*

a. Full cutoff luminaires shall be used for all security lighting and dusk-to-dawn area lighting.

b. Outdoor illumination, including, but not limited to, areas used for outdoor sales and display, eating, parking, assembly, service, storage of equipment and freight, loading and unloading, repair, maintenance, commercial activities, and industrial activities shall not continue after 11:00 p.m., or no more than one hour after active use of the area ceases, whichever is later, except for security lighting.

c. Security lighting shall be required for all active entrances to buildings, parking lots and access to buildings or parking lots. All security lighting shall maintain an average of 0.75 fc, a minimum of 0.3 fc and a maximum of 3 fc from dusk until dawn.

d. No outdoor recreational facility shall be illuminated after 11:00 p.m. except to conclude a scheduled and sanctioned recreational or sporting event by the Village or other authorized agency in progress prior to 11:00 p.m. The luminaries shall be extinguished after outdoor recreational events are completed and the site has been vacated.

1. *Exceptions.* Public recreational facilities that operate or are open to the public on a 24-hour basis.

e. Automatic timing devices with a photosensor or an astronomical timeclock, which control the hours of illumination shall be required for all parking lots, car dealerships/outdoor display lots and parking garages. These devices may remain on Eastern Standard Time throughout the year.

(4) *Illumination levels.* Table 34-1362(1), illumination levels, indicates the minimum and maximum illumination levels for specific site elements, as well as the maximum to minimum, and average to minimum ratios.

Table 34-1362(1): Illumination Levels

Outdoor Lighting	Maximum Illumination (1)	Minimum Illumination (1)	Max to Min Ratio	Average to Min Ratio
Buildings and Accessory Structures				
a. Pathway lighting (2)	5.0 (4)	-	-	-
b. Canopies, drive-thru and overhangs	30.0	3.0	10:1	2.5:1
Parking lots				
a. Multifamily residential	3.0	0.3	10:1	-
b. All others	12.0	1.0	12:1	3:1
Parking Structures				
a. Parking area	10.0	1.0	10:1	4:1
b. Ramps—Day	20.0	2.0	10:1	-
c. Ramps—Night	10.0	1.0	10:1	-
d. Entrance area—Day	50.0	5.0	10:1	-
e. Entrance area—Night	10.0	1.0	10:1	-
f. Stairways	-	10.0	-	-
Property Boundary	Refer to Light Trespass			
Specialty Lighting (3)				
a. Outdoor entertainment	Per IESNA Lighting Handbook			
b. Parks				
Other Lighting Types				
a. Outdoor display and storage for vehicle sales and rental.	40	1.0	15:1	4:1
b. Other outdoor display and storage Areas.	20	1.0	15:1	4:1
c. Outdoor work areas	20	1.0	15:1	4:1
Notes				

1. Measured in foot-candles.
2. Building or accessory mounted luminaries used to light parking lots shall comply with parking lot illumination levels.
3. Applicable to outdoor recreation areas only, excluding areas such as parking lots, drive isles, pathways, building and landscape lighting.
4. Fully shielded bollards not greater than 42 inches in height may be permitted up to 20 foot-candles.

LIGHTING SYMBOLS SCHEDULE

ALL SYMBOLS DO NOT NECESSARILY APPEAR ON THESE DRAWINGS

NOTES:
1. IF WALL MOUNTED FIXTURE PROJECTS 4" OR MORE FROM FINISHED WALL THERE SHALL BE 80" VERTICAL CLEARANCE A.F.F.
2. PROVIDE A SEPARATE REFERENCE CONDUCTOR FOR THE FIXTURES BATTERY PACK, FED FROM THE SAME CIRCUIT AS THE FIXTURE. THIS REFERENCE CONDUCTOR SHALL NOT ROUTE THROUGH ANY LOCAL SWITCH OR LIGHTING CONTROL RELAY. ALL FIXTURES WITH EMERGENCY BATTERY PACKS SHALL BE SWITCHED AS SHOWN ON PLANS, UNO. ALL FIXTURES WITH EMERGENCY BATTERY PACKS SHALL BE PROVIDED WITH INTEGRAL RED TEST BUTTON, UNO.

SYMBOL	DESCRIPTION	REMARKS
	2' x 4' LIGHT FIXTURE	
	2' x 2' LIGHT FIXTURE	
	1' x 4' LIGHT FIXTURE	
	LINEAR STRIP LIGHTING FIXTURE	NOTE 1
	DOWNLIGHT	
	WALL WASH/ADJUSTABLE DOWNLIGHT - ARROW INDICATED DIRECTION OF BEAM	
	LINEAR LIGHT WALL MOUNTED FIXTURE	NOTE 1
	WALL SCONCE	NOTE 1
	TRACK HEAD	
	PENDANT	
	EXIT SIGN - SINGLE FACE	NOTE 1
	EXIT SIGN - DUAL FACE	NOTE 1
	DUAL HEAD EMERGENCY LIGHT WITH INTEGRAL BATTERY PACK	NOTE 1
	SINGLE HEAD SITE AREA LUMINAIRE	
	DUAL HEAD SITE AREA LUMINAIRE	
	EXISTING SINGLE HEAD SITE AREA LUMINAIRE	
	EXISTING DUAL HEAD SITE AREA LUMINAIRE	
	BOLLARD	
	LANDSCAPE LUMINAIRE	
HG-1	WHERE SHOWN, INDICATES PANEL AND CIRCUIT SERVING ALL FIXTURES IN THE SAME ROOM.	
	TYPICAL FIXTURE EQUIPPED WITH EMERGENCY BATTERY BALLAST.	NOTE 2



ELECTRICAL ABBREVIATIONS

A	AMPERES	LTG	LIGHTING
ABV	ABOVE		
A/C	AIR CONDITIONING	MAX	MAXIMUM
ACT	ABOVE COUNTER TOP	MC	MECHANICAL CONTRACTOR
AFF	ABOVE FINISHED FLOOR	MCB	MAIN CIRCUIT BREAKER
AF	AMP FUSED	MCC	MOTOR CONTROL CENTER
AFG	ABOVE FINISHED GRADE	MCM	THOUSAND CIRCULAR MILS
AL	ALUMINUM	MDP	MAIN DISTRIBUTION PANEL
ARCH	ARCHITECT	MECH	MECHANICAL
ASB	ABOVE SPLASH BLOCK	MH	MANHOLE
ASC	ABOVE SUSPENDED CEILING	MIN	MINIMUM
ASD	ADJUSTABLE SPEED DRIVE	MISC	MISCELLANEOUS
AUTO	AUTOMATIC	MLO	MAIN LUG ONLY
AUX	AUXILIARY	MSB	MAIN SWITCHBOARD
ATS	AUTOMATIC TRANSFER SWITCH	MTD	MOUNTED
AWG	AMERICAN WIRE GAUGE		
		NEC	NATIONAL ELECTRICAL CODE
BFF	BELOW FINISH FLOOR	NEMA	NATIONAL ELECTRICAL MANUFACTURERS ASSOCIATION
BLDG	BUILDING		
BFG	BELOW FINISHED GRADE	NEUT	NEUTRAL
		NF	NON FUSED
C	CONDUIT	NIC	NOT IN CONTRACT
C/B	CIRCUIT BREAKER	NL	NIGHT LIGHT
CCTV	CLOSED CIRCUIT TELEVISION	N.O.	NORMALLY OPEN
CCT	CIRCUIT	N.C.	NORMALLY CLOSED
CLG	CEILING	NO.	NUMBER
COL	COLUMN	NTS	NOT TO SCALE
COMB	COMBINATION		
CONC	CONCRETE	OC	OVER COUNTERTOP
CONST	CONSTRUCTION	OD	OUTSIDE DIAMETER
		OFCI	OWNER FURNISHED CONTRACTOR INSTALLED
DFC	DOWN FROM CEILING		
DIA	DIAMETER	OH	OVERHEAD
DN	DOWN		
DWG	DRAWING	P	POLE
		PC	PLUMBING CONTRACTOR
EA	EACH	PF	POWER FACTOR
EC	ELECTRICAL CONTRACTOR	PH	PHASE
EF	EXHAUST FAN	PL	PROPERTY LINE
ELEC	ELECTRIC / ELECTRICAL	PNL	PANEL
EMER	EMERGENCY	PVC	POLYVINYL CHLORIDE
EMT	ELECTRICAL METALLIC TUBING		
EPO	EMERGENCY POWER OFF	RECPT	RECEPTACLE
EQUIP	EQUIPMENT	RE:	REFERENCE/REFER TO
EWC	ELECTRIC WATER COOLER	REQD	REQUIRED
EX	EXISTING	RGS	RIGID GALVANIZED STEEL
EXT	EXTERIOR	RM	ROOM
FA	FIRE ALARM	SCH	SCHEDULE
FACP	FIRE ALARM CONTROL PANEL	SPEC	SPECIFICATIONS
FLR	FLOOR/FLOORING	SVC	SERVICE
FXTR	FIXTURE		
		TEL	TELEPHONE
G	GROUND	TR	TAMPER RESISTANT
GC	GENERAL CONTRACTOR	TS	TRANSFER SWITCH
GD	GENERAL DUTY	TYP	TYPICAL
GEN	GENERATOR	TTB	TELEPHONE TERMINAL BOARD
GFI	GROUND FAULT INTERRUPT		
		UG	UNDERGROUND
HD	HEAVY DUTY	UL	UNDERWRITER'S LABORATORIES
HP	HORSEPOWER	UNO	UNLESS NOTED OTHERWISE
HT	HEIGHT		
HVAC	HEATING/VENTILATING/AIR CONDITIONING	V	VOLTS
		VA	VOLT - AMPERES
HW	HOT WATER	VSD	VARIABLE SPEED DRIVE
ID	INSIDE DIAMETER	W	WATTS
IG	ISOLATED GROUND	W/	WITH
IMT	INTERMEDIATE METAL	W/O	WITHOUT
		WP	WEATHER PROOF
J	JUNCTION BOX	WR	WEATHER RESISTANT
		WT	WEIGHT
KVA	KILOVOLT-AMPERES	WTR	WATER
KW	KILOWATTS	WW	WASTE WATER
KCMIL	THOUSAND CIRCULAR MILS		
		XFMR	TRANSFORMER

(3) *Exemptions.* The following uses shall be exempt to the extent listed below:

a. *Residential.* Single-family and multifamily dwellings up to two units shall not be subject to the requirements of this section.

b. *Street lights.* Street lights in any public ROW that meet the requirements of the appropriate public utility.

c. *Temporary lighting.* The temporary use of low wattage or low voltage lighting for public festivals, celebrations, and the observance of holidays are exempt from regulation except where they create a hazard or nuisance from glare.

d. *Landscape and accent lighting.* Landscape and accent lighting fixtures that comply with the Florida Building Code, Energy Conservation, 5th Edition, Section C4056, efficiency requirements shall be exempt. All exempt landscape and accent lighting fixtures must have a locking mechanism and a glare shield so that light is aimed, and remains aimed at the surface intended. Accent and landscape luminaries not exceeding 100 watts.

Location	Maximum Height	
	U/S Tier	Rural, Exurban and AGR Tiers
Buildings and Accessory Structures		
a. Buildings	25 feet or eave overhang, whichever is lower (unless required by the Florida Building Code)	
b. Accessory structures	10 feet	8 feet
Parking Lot		
a. Residential	20 feet	15 feet
b. Industrial	40 feet	-
c. Commercial, civic and institutional	30 feet, or equal to the height of the building up to a maximum of 40 feet	25 feet
Parking Structures		
a. Luminaires on top parking level.	20 feet or 25 feet (4)	15 feet
Property Boundary		
a. Luminaires within 100 feet of residential (2)	20 feet	15 feet
Specialty Lighting (3)		
a. Golf courses	Per IESNA Lighting Handbook	
b. Outdoor entertainment		
c. Parks		
Notes:		

1. For the purposes of this table, residential parcel shall include any residential use, or any vacant parcel with a residential land use designation.
2. The height of any lighting luminaire within 100 feet of a parcel with a residential use land use designation shall be limited in accordance with the height limitations of the adjacent residential land development district.
3. Applicable to outdoor recreation areas only, excluding areas such as parking lots, drive isles, pathways, building and landscape lighting.
4. Minimum setback shall be 45 feet from exterior edge of wall for all luminaries, except luminaries mounted to interior face of perimeter wall, which do not exceed the height of the perimeter wall.

ELECTRICAL SHEET LIST

SHEET NUMBER	SHEET NAME
E0.01	ELECTRICAL SYMBOLS
E1.00	ELECTRICAL SITE PLAN
E1.01	PHOTOMETRICS A
E1.02	PHOTOMETRICS B
E6.00	LIGHTING DIAGRAMS

THIS ITEM HAS BEEN DIGITALLY SIGNED AND SEALED BY:

ON THE DATE ADJACENT TO THE SEAL

PRINTED COPIES OF THIS DOCUMENT ARE NOT CONSIDERED SIGNED AND SEALED. THE SIGNATURE MUST BE VERIFIED IN THE ELECTRONIC DOCUMENTS.

WGI, INC.
2035 VISTA PARKWAY
WEST PALM BEACH, FL 33411
CERT. NO. 6097
CASEY SVEIVEN, PE NO. 90074

PALM SPRINGS, FL. ORDINANCES DESIGN CRITERIA

WGI
2035 Vista Parkway, West Palm Beach, FL 33411
Phone No. 866.809.2220 www.wgiinc.com
Cert No. 6091 - LB No. 7055

CASEY RYAN SVEIVEN LICENSE No. 90074 STATE OF FLORIDA PROFESSIONAL ENGINEER

NO.	DATE	DESCRIPTION	BY
1	8/20/21	COMMENT RESPONSE	ML
2	12/10/21	SITE PLAN REVISION	ML
3	05/16/22	SITE PLAN REVISION	

REVISIONS

CAD	JOB NO.	DRAWN BY	CHECK BY	DATE
	5581.00	ML	CS	

KIRK ROAD
VILLAGE OF PALM SPRINGS

ELECTRICAL SYMBOLS

SHEET:
E0.01

1 OVERALL SITE PLAN
1" = 40'-0"

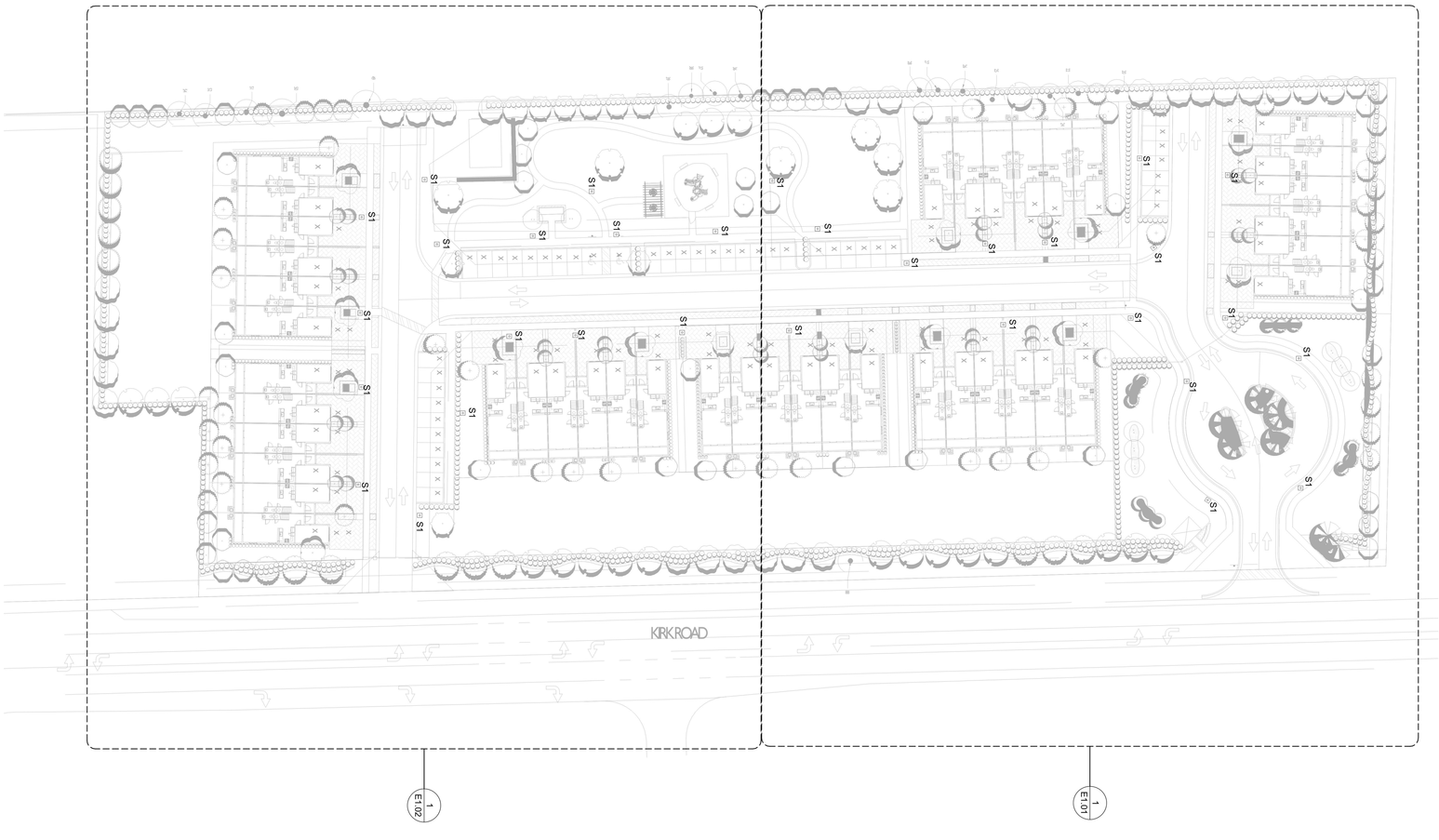

KIRK ROAD
VILLAGE OF PALM SPRINGS

ELECTRICAL SITE PLAN

SHEET: E1.00

CAD	
JOB NO.	5581.00
DRAWN BY	ML
CHECK BY	CS
DATE	

REVISIONS

NO.	DATE	DESCRIPTION	BY
1	8/20/21	COMMENT RESPONSE	ML
2	12/10/21	SITE PLAN REVISION	ML
3	05/16/22	SITE PLAN REVISION	ML

CASEY RYAN STEVEN LICENSED STATE OF FLORIDA PROFESSIONAL ENGINEER No. 90074

WGI
2035 Vista Parkway, West Palm Beach, FL 33411
Phone No. 866.909.2220 www.wginc.com
Cert No. 6091 - LB No. 7055

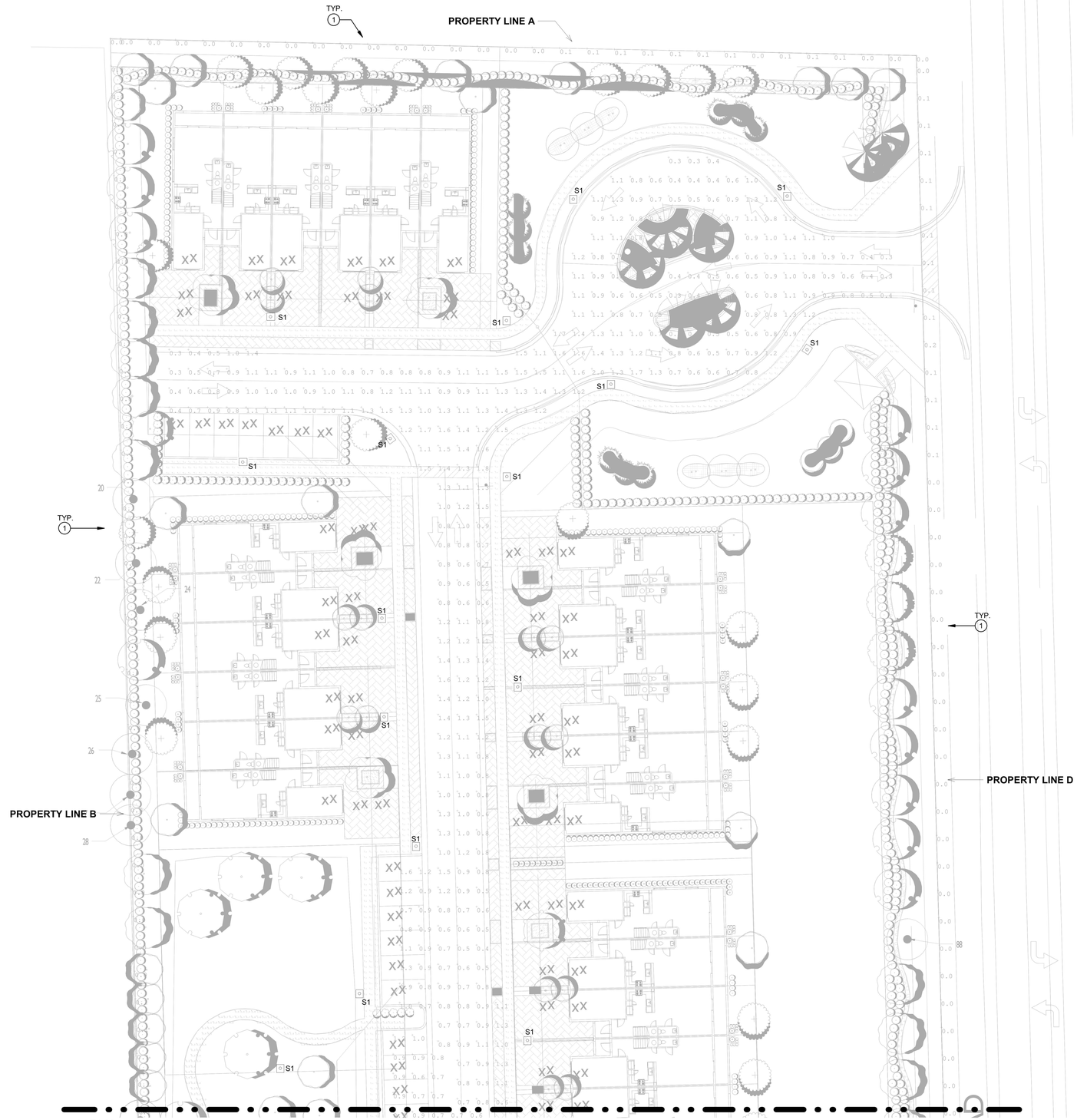

1 PHOTOMETRICS A
1" = 20'-0"

KEYNOTES - E1.01

1 FOR VERTICAL PROPERTY LINE PHOTOMETRIC ANALYSIS AT 6 FEET, REFER TO SHEET E0.01.

WGI
2035 Vista Parkway, West Palm Beach, FL 33411
Phone No. 866.909.2220 www.wginc.com
Cert No. 6091 - LB No. 7055

CASEY RYAN STEVENS LICENSE No. 90074 STATE OF FLORIDA PROFESSIONAL ENGINEER

NO.	DATE	DESCRIPTION	BY
1	8/20/21	COMMENT RESPONSE	ML
2	12/10/21	SITE PLAN REVISION	ML
3	05/16/22	SITE PLAN REVISION	

REVISIONS

CAD	
JOB NO.	5581.00
DRAWN BY	ML
CHECK BY	CS
DATE	

KIRK ROAD
VILLAGE OF PALM SPRINGS

PHOTOMETRICS A

SHEET:
E1.01

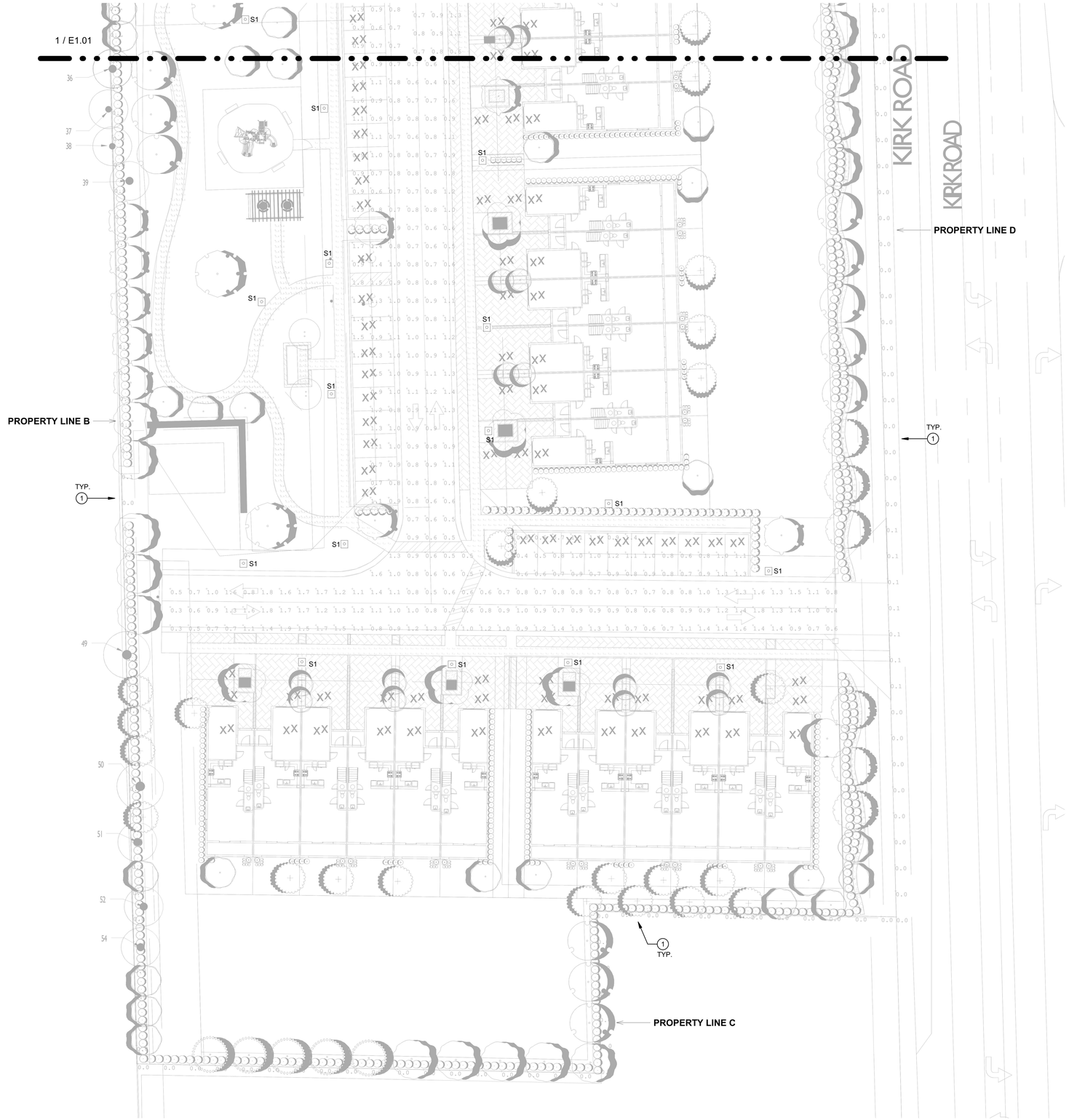

1 PHOTOMETRICS B
1" = 20'-0"

KEYNOTES - E1.02

1 FOR VERTICAL PROPERTY LINE PHOTOMETRIC ANALYSIS AT 6 FEET, REFER TO SHEET E0.01.

WGI
2035 Vista Parkway, West Palm Beach, FL 33411
Phone No. 866.909.2220 www.wginc.com
Cert No. 6091 - LB No. 7055

CASEY RYAN STEVENS LICENSE No. 90074 STATE OF FLORIDA PROFESSIONAL ENGINEER

NO.	DATE	DESCRIPTION	BY
1	8/20/21	COMMENT RESPONSE	ML
2	12/10/21	SITE PLAN REVISION	ML
3	05/16/22	SITE PLAN REVISION	

REVISIONS

CAD	
JOB NO.	5581.00
DRAWN BY	ML
CHECK BY	CS
DATE	

KIRK ROAD
VILLAGE OF PALM SPRINGS

PHOTOMETRICS B

SHEET:
E1.02



Evolve®
LED Post Top
Town & Country (EPTT)

GE current
a Daintree company

Product Features

The Evolve® LED Town & Country Post Top offers energy efficiency and quality of light in a classic look and style. The advanced LED optical system provides improved horizontal and vertical uniformity, reduced glare and improved lighting control. GE's unique optical technology effectively aims the light where needed.

The Town & Country post top can yield up to a 60-percent reduction in system energy compared with standard HID systems, depending on applications. This reliable system operates well in cold temperatures and offers more than 20 years of service life, reducing maintenance frequency and expense, based on a rated 100,000 hour life and 12 hours of operation per day.

Applications

- Roadway, site, area, and general lighting utilizing advanced LED optical system providing high uniformity, excellent vertical illuminance, reduced offsite visibility, and reduced on-site glare.

Housing

- Die-cast aluminum housing.
- Traditional lantern design.
- Cupola compatible with C136.10 PE's and Shorting Caps and LightGrid 2.0 node.

LED & Optical Assembly

- Structured LED array for optimized Roadway/Walkway photometric distributions.
- Utilizes high brightness 2700K, 3000K, 4000K and 5000K LEDs at 70 CRI typical.
- LM-79 tests and reports are performed in accordance with IESNA standards.

Lumen Maintenance Tables

Projected Lxx per IES TM-21 at 25°C for reference:

LUMEN OUTPUT CODES	Lxx(10k)@Hours		
	25,000 hr	50,000 hr	60,000 hr
02, 03, 04, 05	L94	L89	L87
06	L97	L96	L96
07	L96	L94	L93

Note: Projected Lxx based on LM80 (10,000 hour testing). DOE Lighting Facts Verification Testing Tolerances apply to initial luminous flux and lumen maintenance measurements.

Lumen Ambient Temperature Factors:

Ambient Temp (°C)	Initial Flux Factor
10	1.02
20	1.01
25	1.00
30	0.99
40	0.98
45	0.97

Please refer to the DLC QPL website for the latest and most complete information. **www.designlights.org/QPL**

International Dark Sky Association listed. 2700K or 3000K must be selected to meet IDA certification and approval.

Ratings

- **Surge Protection:** per ANSI C136.2-2015
  - 6kV/3kA "Basic (40 Strikes)" – Standard (Driver Internal)
  - 10kV/5kA "Enhanced (40 Strikes)" – Secondary SPD, Option R
- **Safety:** cULus UL/cUL Listed. UL1598 listed, suitable for wet locations
- **Environmental:** Compliant with the materials restrictions of RoHS
- **EMI:** Title 47 CFR Part 15 Class A
- **Vibration:** 3.0G per ANSI C136.41-2010
- **Operating Temperature:** -40°C to 50°C
  - LM-79 testing in accordance with IESNA Standards.
  - LED optical enclosure rated IP65 per ANSI C136.25-2009

Electrical

- **Input Voltage:** 120-277V
- **Input Frequency:** 50/60Hz
- **Power Factor (PF)*:** ≥90
- **Total Harmonic Distortion (THD)*:** ≤20%

** System PF and THD specified at rated watts.*

Mounting

- Mounts to 2-3/8 to 3-inch (60-76mm) OD vertical tenon.

Construction & Finish

- **Housing:** Die cast enclosure
- Corrosion resistant polyester powder paint, minimum 2.0 mil. thickness.
- **Standard colors:** Black & Dark Bronze.
- RAL & custom colors available.

Controls

- **Dimming:** Standard 0-10V; Optional DALI
- **Sensors:** Photo-electric sensors (PE) available
- Supports LightGrid via 7-Pin C136.41 socket

Accessories

- House Side Shields
- Ladder Rest

Warranty

- 5 Year Standard
- 10 Year Optional

FIXTURE S1

Ordering Number Logic

Town & Country Post Top (EPTT)



EPTT	01	0	03	A	N	30	X	P	XXXX	XXX

FAMILY	GENERATION	VOLTAGE	LUMEN OUTPUT	DIST. CODE	REFRACTOR	LED COLOR TEMP	CONTROLS	MOUNTING ARM	COLOR	OPTIONS
E = Evolve **P** = Post Top **T** = Town & Country **T** = Traditional	**01** = 1st Gen	**0** = 120-277	**A** = Symmetric **B** = Asymmetric **C** = Symmetric HO **D** = Asymmetric HO	**A** = Acrylic **P** = Polycarbonate **N** = None **	**27** = 2700K^^ **30** = 3000K^^ **40** = 4000K **50** = 5000K ^^ Select 2700K or 3000K CCT for IDA approved units # Order Dimming/Control PE as a separate item.	**A** = ANSI C136.41 7-pin dimming PE Socket **D** = ANSI C136.41 7-pin dimming PE Socket w/Shorting Cap **E** = ANSI C136.41 7-pin dimming PE Socket w/non-dimming PE	**P** = Pole Mounted	**DKBZ** = Dark Bronze **BLCK** = Black	**L** = Latch Canopy **P** = Prewire with 6 Ft of 14/3 cable **R** = Secondary 10kV/5kA Surge Protection **XXX** = Special Options **U** = Dali Programmable*	

**Compatible with LightGrid 2.0 nodes*

LUMEN OUTPUT	DISTRIBUTION CODE	DESCRIPTION	REFRACTOR CODE	TYPICAL INITIAL LUMENS 4000K/WATTAGE 5000K 120-277V 2700K	3000K	4000K	TYPICAL SYSTEM WATTAGE 120-277V 2700K	3000K	BUG RATING 4000K/ 5000K	IES FILE NAME 2700K	3000K	4000K	5000K
02	A	Symmetric	A	2650	2730	2840	26	B1-U3-G2	B1-U3-G2	EPTT01_02AA27_-120-277V.IES	EPTT01_02AA30_-120-277V.IES	EPTT01_02AA40_-120-277V.IES	EPTT01_02AA50_-120-277V.IES
03	A	Symmetric	A	3930	3200	3320	30	B1-U3-G2	B1-U3-G2	EPTT01_03AA27_-120-277V.IES	EPTT01_03AA30_-120-277V.IES	EPTT01_03AA40_-120-277V.IES	EPTT01_03AA50_-120-277V.IES
04	A	Symmetric	A	4460	4600	4793	44	B2-U3-G2	B2-U3-G2	B2-U3-G2	B2-U3-G2	EPTT01_04AA27_-120-277V.IES	EPTT01_04AA30_-120-277V.IES	EPTT01_04AA40_-120-277V.IES	EPTT01_04AA50_-120-277V.IES
05	A	Symmetric	A	5480	5650	5730	56	B2-U3-G2	B2-U3-G2	B2-U3-G2	B2-U3-G2	EPTT01_05AA27_-120-277V.IES	EPTT01_05AA30_-120-277V.IES	EPTT01_05AA40_-120-277V.IES	EPTT01_05AA50_-120-277V.IES
06	C	Symmetric HO	A	5490	5680	5900	56	B2-U3-G2	B3-U3-G3	EPTT01_06CA27_-120-277V.IES	EPTT01_06CA30_-120-277V.IES	EPTT01_06CA40_-120-277V.IES	EPTT01_06CA50_-120-277V.IES
07	C	Symmetric HO	A	6720	6950	7380	73	B2-U4-G3	B3-U4-G3	B3-U4-G3	EPTT01_07CA27_-120-277V.IES	EPTT01_07CA30_-120-277V.IES	EPTT01_07CA40_-120-277V.IES	EPTT01_07CA50_-120-277V.IES
02	A	Asymmetric	A	2490	2560	2610	26	B1-U3-G2	B1-U3-G2	B1-U3-G2	B1-U3-G2	EPTT01_02BA27_-120-277V.IES	EPTT01_02BA30_-120-277V.IES	EPTT01_02BA40_-120-277V.IES	EPTT01_02BA50_-120-277V.IES
03	B	Asymmetric	A	2910	3000	3060	30	B1-U3-G2	B1-U3-G2	B1-U3-G2	B1-U3-G2	EPTT01_03BA27_-120-277V.IES	EPTT01_03BA30_-120-277V.IES	EPTT01_03BA40_-120-277V.IES	EPTT01_03BA50_-120-277V.IES
04	B	Asymmetric	A	3980	4101	4250	44	B2-U3-G2	B2-U3-G2	B2-U3-G2	B2-U3-G2	EPTT01_04BA27_-120-277V.IES	EPTT01_04BA30_-120-277V.IES	EPTT01_04BA40_-120-277V.IES	EPTT01_04BA50_-120-277V.IES
05	B	Asymmetric	A	4850	5000	5200	56	B2-U3-G2	B2-U3-G2	B2-U3-G2	B2-U3-G2	EPTT01_05BA27_-120-277V.IES	EPTT01_05BA30_-120-277V.IES	EPTT01_05BA40_-120-277V.IES	EPTT01_05BA50_-120-277V.IES
06	D	Asymmetric HO	A	5090	5300	5500	56	B2-U3-G2	B2-U3-G3	B2-U3-G2	B2-U3-G3	EPTT01_06DA27_-120-277V.IES	EPTT01_06DA30_-120-277V.IES	EPTT01_06DA40_-120-277V.IES	EPTT01_06DA50_-120-277V.IES
07	D	Asymmetric HO	A	6230	6485	6880	73	B2-U4-G3	B2-U4-G3	B2-U4-G3	B2-U4-G3	EPTT01_07DA27_-120-277V.IES	EPTT01_07DA30_-120-277V.IES	EPTT01_07DA40_-120-277V.IES	EPTT01_07DA50_-120-277V.IES
02	A	Symmetric	P	2080	2140	2200	26	B1-U3-G1	B1-U3-G1	B1-U3-G1	B1-U3-G1	EPTT01_02AP27_-120-277V.IES	EPTT01_02AP30_-120-277V.IES	EPTT01_02AP40_-120-277V.IES	EPTT01_02AP50_-120-277V.IES
03	A	Symmetric	P	2430	2500	2580	30	B1-U3-G1	B1-U3-G1	B1-U3-G1	B1-U3-G1	EPTT01_03AP27_-120-277V.IES	EPTT01_03AP30_-120-277V.IES	EPTT01_03AP40_-120-277V.IES	EPTT01_03AP50_-120-277V.IES
04	A	Symmetric	P	3490	3600	3740	44	B2-U3-G1	B2-U3-G1	B2-U3-G1	B2-U3-G1	EPTT01_04AP27_-120-277V.IES	EPTT01_04AP30_-120-277V.IES	EPTT01_04AP40_-120-277V.IES	EPTT01_04AP50_-120-277V.IES
05	A	Symmetric	P	4270	4400	4590	56	B2-U3-G2	B2-U3-G2	B2-U3-G2	B2-U3-G2	EPTT01_05AP27_-120-277V.IES	EPTT01_05AP30_-120-277V.IES	EPTT01_05AP40_-120-277V.IES	EPTT01_05AP50_-120-277V.IES
06	C	Symmetric HO	P	4300	4400	4670	56	B2-U3-G2	B2-U3-G2	B2-U3-G2	B2-U3-G2	EPTT01_06CP27_-120-277V.IES	EPTT01_06CP30_-120-277V.IES	EPTT01_06CP40_-120-277V.IES	EPTT01_06CP50_-120-277V.IES
07	C	Symmetric HO	P	5260	5390	5840	73	B2-U4-G2	B3-U4-G2	B2-U4-G2	B3-U4-G2	EPTT01_07CP27_-120-277V.IES	EPTT01_07CP30_-120-277V.IES	EPTT01_07CP40_-120-277V.IES	EPTT01_07CP50_-120-277V.IES
02	B	Asymmetric	P	1960	1960	2000	26	B1-U3-G1	B1-U3-G1	B1-U3-G1	B1-U3-G1	EPTT01_02BP27_-120-277V.IES	EPTT01_02BP30_-120-277V.IES	EPTT01_02BP40_-120-277V.IES	EPTT01_02BP50_-120-277V.IES
03	B	Asymmetric	P	2230	2300	2340	30	B1-U3-G2	B1-U3-G2	B1-U3-G2	B1-U3-G2	EPTT01_03BP27_-120-277V.IES	EPTT01_03BP30_-120-277V.IES	EPTT01_03BP40_-120-277V.IES	EPTT01_03BP50_-120-277V.IES
04	B	Asymmetric	P	3290	3300	3380	44	B2-U3-G2	B2-U3-G2	B2-U3-G2	B2-U3-G2	EPTT01_04BP27_-120-277V.IES	EPTT01_04BP30_-120-277V.IES	EPTT01_04BP40_-120-277V.IES	EPTT01_04BP50_-120-277V.IES
05	B	Asymmetric	P	3880	4000	4170	56	B2-U3-G2	B2-U3-G2	B2-U3-G2	B2-U3-G2	EPTT01_05BP27_-120-277V.IES	EPTT01_05BP30_-120-277V.IES	EPTT01_05BP40_-120-277V.IES	EPTT01_05BP50_-120-277V.IES
06	D	Asymmetric HO	P	3940	4100	4310	56	B2-U3-G2	B2-U3-G3	B2-U3-G2	B2-U3-G3	EPTT01_06DP27_-120-277V.IES	EPTT01_06DP30_-120-277V.IES	EPTT01_06DP40_-120-277V.IES	EPTT01_06DP50_-120-277V.IES
07	D	Asymmetric HO	P	4820	5020	5410	73	B2-U4-G3	B2-U4-G3	B2-U4-G3	B2-U4-G3	EPTT01_07DP27_-120-277V.IES	EPTT01_07DP30_-120-277V.IES	EPTT01_07DP40_-120-277V.IES	EPTT01_07DP50_-120-277V.IES
02	A	Symmetric	N	2600	2700	2760	26	B1-U0-G1	B1-U0-G1	B1-U0-G1	B1-U0-G1	EPTT01_02AN27_-120-277V.IES	EPTT01_02AN30_-120-277V.IES	EPTT01_02AN40_-120-277V.IES	EPTT01_02AN50_-120-277V.IES
03	A	Symmetric	N	3400	3500	3580	30	B2-U0-G1	B2-U0-G1	B2-U0-G1	B2-U0-G1	EPTT01_03AN27_-120-277V.IES	EPTT01_03AN30_-120-277V.IES	EPTT01_03AN40_-120-277V.IES	EPTT01_03AN50_-120-277V.IES
04	A	Symmetric	N	4850	5000	5140	44	B2-U0-G1	B3-U0-G1	B3-U0-G1	B3-U0-G1	EPTT01_04AN27_-120-277V.IES	EPTT01_04AN30_-120-277V.IES	EPTT01_04AN40_-120-277V.IES	EPTT01_04AN50_-120-277V.IES
05	A	Symmetric	N	5920	6100	6300	56	B3-U0-G1	B3-U0-G1	B3-U0-G1	B3-U0-G1	EPTT01_05AN27_-120-277V.IES	EPTT01_05AN30_-120-277V.IES	EPTT01_05AN40_-120-277V.IES	EPTT01_05AN50_-120-277V.IES
06	C	Symmetric HO	N	5930	6180	6420	56	B3-U0-G1	B3-U0-G1	B3-U0-G1	B3-U0-G1	EPTT01_06CN27_-120-277V.IES	EPTT01_06CN30_-120-277V.IES	EPTT01_06CN40_-120-277V.IES	EPTT01_06CN50_-120-277V.IES
07	C	Symmetric HO	N	7260	7560	8030	73	B3-U0-G1	B3-U0-G1	B3-U0-G1	B3-U0-G1	EPTT01_07CN27_-120-277V.IES	EPTT01_07CN30_-120-277V.IES	EPTT01_07CN40_-120-277V.IES	EPTT01_07CN50_-120-277V.IES
02	B	Asymmetric	N	2630	2720	2770	26	B1-U0-G1	B1-U0-G1	B1-U0-G1	B1-U0-G1	EPTT01_02BN27_-120-277V.IES	EPTT01_02BN30_-120-277V.IES	EPTT01_02BN40_-120-277V.IES	EPTT01_02BN50_-120-277V.IES
03	B	Asymmetric	N	3080	3180	3240	30	B1-U0-G1	B1-U0-G1	B1-U0-G1	B1-U0-G1	EPTT01_03BN27_-120-277V.IES	EPTT01_03BN30_-120-277V.IES	EPTT01_03BN40_-120-277V.IES	EPTT01_03BN50_-120-277V.IES
04	B	Asymmetric	N	4370	4503	4640	44	B1-U0-G1	B2-U0-G1	B1-U0-G1	B2-U0-G1	EPTT01_04BN27_-120-277V.IES	EPTT01_04BN30_-120-277V.IES	EPTT01_04BN40_-120-277V.IES	EPTT01_04BN50_-120-277V.IES
05	B	Asymmetric	N	5430	5600	5730	56	B1-U0-G2	B2-U0-G2	B1-U0-G2	B2-U0-G2	EPTT01_05BN27_-120-277V.IES	EPTT01_05BN30_-120-277V.IES	EPTT01_05BN40_-120-277V.IES	EPTT01_05BN50_-120-277V.IES
06	D	Asymmetric HO	N	5470	5700	5950	56	B1-U0-G2	B2-U0-G2	B1-U0-G2	B2-U0-G2	EPTT01_06DN27_-120-277V.IES	EPTT01_06DN30_-120-277V.IES	EPTT01_06DN40_-120-277V.IES	EPTT01_06DN50_-120-277V.IES
07	D	Asymmetric HO	N	6700	6980	7440	73	B2-U0-G2	B2-U0-G2	B2-U0-G2	B2-U0-G2	EPTT01_07DN27_-120-277V.IES	EPTT01_07DN30_-120-277V.IES	EPTT01_07DN40_-120-277V.IES	EPTT01_07DN50_-120-277V.IES

Not DLC Listed

Photometrics:

Town & Country Post Top (EPTT)

EPTT
120-277V
(05AA50)

5,730 Lumens
EPTT01_05AA50_-120-277V.IES

EPTT
120-277V
(05BA50)

5,200 Lumens
EPTT01_05BA50_-120-277V.IES



EPTT
120-277V
(05AN50)

6,300 Lumens
EPTT01_05AN50_-120-277V.IES



EPTT
120-277V
(05BN50)

5,730 Lumens
EPTT01_05BN50_-120-277V.IES



Product Dimensions

Town & Country Post Top (EPTT)

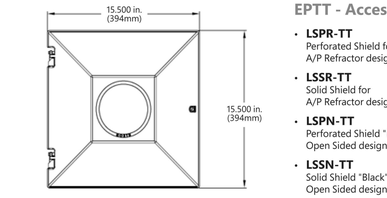

EPTT - Accessories

- **LSPR-TT**
  Perforated Shield for A/P Refractor design
- **LSSR-TT**
  Solid Shield for A/P Refractor design
- **LSPN-TT**
  Perforated Shield "Bare Aluminum" for Open Sided design
- **LSSN-TT**
  Solid Shield "Black" for Open Sided design
- **LR-TC**
  Ladder Rest – Black

DATA
• Approximate Net Weight: 14-18 lbs (6.2-8 kgs)
• Suggested Mounting Height: 8-18 ft. (2.5-5.5 M)
• Effective Projected Area: 1.6 sq ft. max (0.15 sq M max)

POLES



*MH = Approximate Mounting Height

Brackets and Poles B – 11/30/2020

WGL
2035 Vista Parkway, West Palm Beach, FL 33411
Phone No. 866.809.2220 www.wglinc.com
Cert No. 6091 - LB No. 7055

CASEY RYAN STEVENS LICENSE No. 90074 STATE OF FLORIDA PROFESSIONAL ENGINEER

NO.	DATE	DESCRIPTION	BY
REVISIONS			
1	8/20/21	COMMENT RESPONSE	ML
2	12/10/21	SITE PLAN REVISION	ML
3	05/16/22	SITE PLAN REVISION	

CAD	
JOB NO.	5581.00
DRAWN BY	ML
CHECK BY	CS
DATE	

KIRK ROAD
VILLAGE OF PALM SPRINGS

LIGHTING DIAGRAMS

SHEET:
E6.00

D·R·HORTON® DHI Listed NYSE
America's Builder
www.drhorton.com
6123 LYONS ROAD, COCONUT CREEK, FL 33073 Tel: (954) 949-3000 Fax : (954) 928-8921

BELMONT

PALM SPRINGS, FLORIDA

6-UNIT BUILDING TYPE A

6-UNIT BUILDING TYPE A

SHEET INDEX

	COVER SHEET	S-1	FOUNDATION PLAN
A-1	BUILDING PLANS	S-2	1ST LIFT BEAM PLAN
A-2	BUILDING ELEVATIONS	S-2.1	2ND FLOOR PLAN
CL-1	UNIT CL FLOOR PLANS/ELECTRICAL PLANS	S-3	TYPICAL STRUCTURAL DETAILS
AR-1	UNIT AR FLOOR PLANS/ELECTRICAL PLANS	S-4	2ND LIFT BEAM PLAN
AL-1	UNIT AL FLOOR PLANS/ELECTRICAL PLANS	S-5	TYPICAL STRUCTURAL DETAILS
CR-1	UNIT CR FLOOR PLANS/ELECTRICAL PLANS	S-6	ROOF FRAMING PLAN
D-1	TYPICAL DETAILS	S-7	TYPICAL STRUCTURAL DETAILS
D-2	TYPICAL DETAILS	M-1L	PLAN C MECHANICAL PLAN LEFT
P-1	PLUMBING PLAN	M-1R	PLAN C MECHANICAL PLAN RIGHT
P-2	PLUMBING PLAN	M-2L	PLAN A MECHANICAL PLAN LEFT
		M-2R	PLAN A MECHANICAL PLAN RIGHT

SITE & AREA CALCULATIONS

TOTAL BUILDING AREA	11,264 SQ.FT.
PROPOSED A/C AREA	9,020 SQ.FT.
PROPOSED NON A/C AREA	2,244 SQ.FT.
GARAGES	1,436 SQ.FT.
COVERED LANAI	580 SQ.FT.
ENTRY	226 SQ.FT.

BLDG. DESIGN DATA

CODES: FLORIDA RESIDENTIAL BLDG. CODE 2020 EDITION
NFPA FL. FIRE PREVENTION CODE 7TH ED.
NEC NATIONAL ELECTRIC CODE 2017
CARBON MONOXIDE DETECTORS REQUIREMENTS PER FL
ADMINISTRATIVE CODE RULE 9B-3.0472
ACI 318-14,
ASTM 47th. ED.

DESIGN CRITERIA

COUNTY	PLAM SPRINGS, FL
OCCUPANCY GROUP	R-3
NUMBER OF STORIES	2
BUILDING CATEGORY	ENCLOSED
BASIC WIND SPEED, mph	170
WIND IMPORTANCE FACTOR	1.0
WIND EXPOSURE CATEGORY	C
INTERNAL PRESSURE COEFFICIENT	+/- .18
MINIMUM SOIL PRESSURE, psf	2500
FLOOR LOADS (LIVE & DEAD)	55
ROOF DEAD LOAD, psf	20
ROOF LIVE LOAD, psf	30
CONTRUCTION TYPE	"III B"UNPROTECTED

D·R·HORTON® DHI Listed NYSE
America's Builder
www.drhorton.com
©COPYRIGHT 2004
6123 LYONS ROAD, COCONUT CREEK, FL 33073 Tel: (954) 949-3079 Fax : (954) 928-8921

SPECIALTY ENGINEERING CONSULTANTS, Inc.

SPECIALTY ENGINEERING
CONSULTANTS, Inc

1599 SW 30th AVE.
SUITE #20
BOYNTON BEACH, FL 33426

DADE - BROWARD - PALM BEACH
FL. CA. #0009217

561 - 752 - 5440 OFFICE
561 - 752 - 5542 FAX

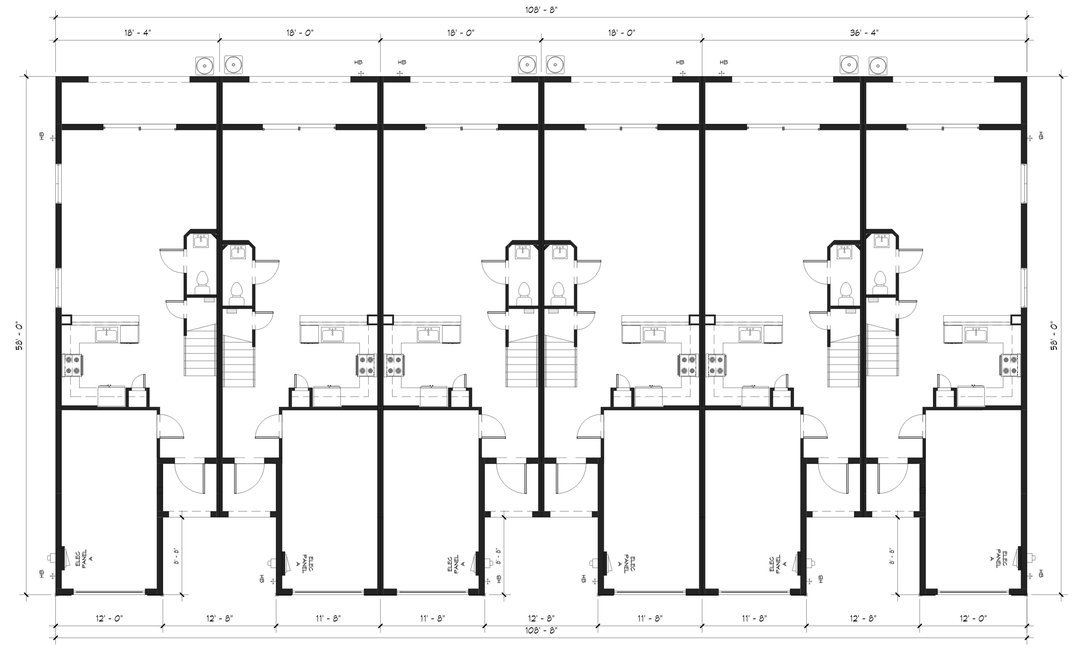

1 1st Flr
1/8" = 1'-0"

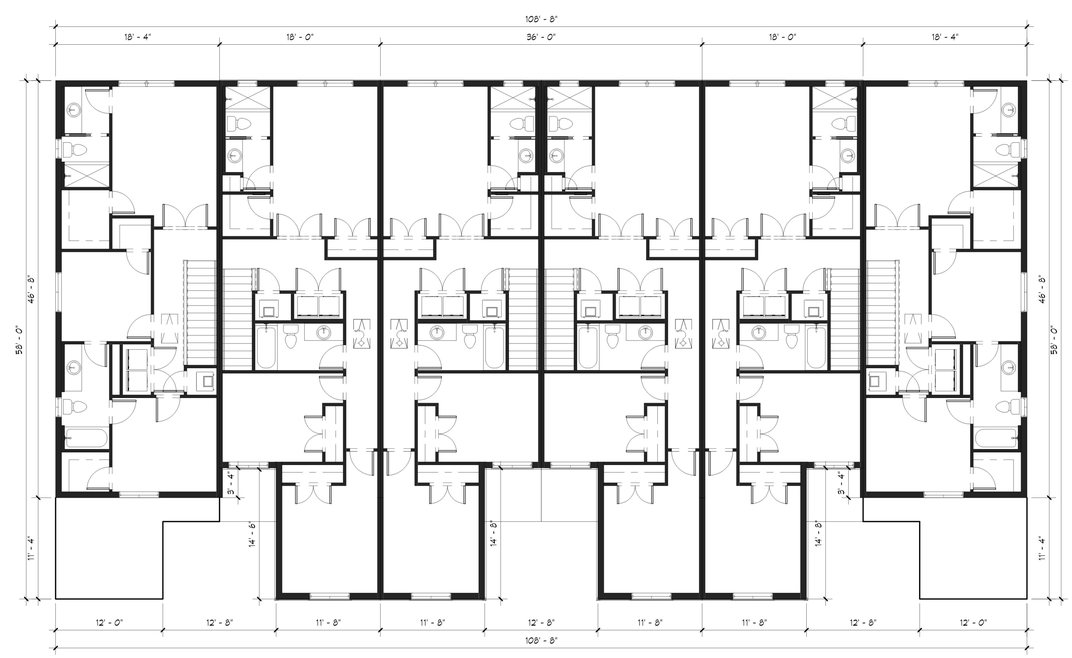

2 2nd Flr
1/8" = 1'-0"

I:\DR HORTON\BELMONT\BUILDING 6-PLEX-A.rvt

BUILDING PLANS

SHEET INFORMATION
6- UNIT BUILDING TYPE A

PROJECT INFORMATION
BELMONT
PALM SPRINGS, FLORIDA

D·R·HORTON® America's Builder
DHI NYSE
www.drhorton.com
6123 LYONS ROAD, COCONUT CREEK, FL 33073 Tel: (954) 949-3000 Fax: (954) 928-8921

SPECIALTY ENGINEERING CONSULTANTS, Inc
1599 SW 30th AVE.
SUITE #20
BOYNTON BEACH, FL 33426

DADE - BROWARD - PALM BEACH
FL. CA. #009217

561 - 752 - 5440 OFFICE
561 - 752 - 5542 FAX

FILE NAME.
SCALE
DATE 5/28/2021
RVD. BY Checker
DRWN. BY Author

REVISION SCHEDULE		
NO	DATE	Description

SEAL
D. ADAM LeBLANC, PE FL #77012

SHEET #
A-1

UPPER ROOF VENT CALCULATION-PLAN A
ATTIC AREA MAX. 1,000 S.F. CALCULATE NET FREE VENT AREA: 1,000 S.F./150 = 6.67 S.F. (1 IN 150 RULED) CONVERT TO SQ. INCHES : 6.67 SF X 144 = 960 SQ.IN
SOFFIT VENT 960 SQ.IN. : 6" CONT SCREEN VENT 6" CONT. VENT : 960 SQ.IN./LF = 960/36 = 27

UPPER ROOF VENT CALCULATION-PLAN C
ATTIC AREA MAX. 900 S.F. CALCULATE NET FREE VENT AREA: 900 S.F./150 = 6.0 S.F. (1 IN 150 RULED) CONVERT TO SQ. INCHES : 6 SF X 144 = 864 SQ.IN
SOFFIT VENT 864 SQ.IN. : 6" CONT SCREEN VENT 6" CONT. VENT : 864 SQ.IN./LF = 864/36 = 24

LOWER ROOF VENT CALCULATION-PLAN A
ATTIC AREA MAX. 40 S.F. CALCULATE NET FREE VENT AREA: 40 S.F./150 = .27 S.F. (1 IN 150 RULED) CONVERT TO SQ. INCHES : .27 SF X 144 = 38.4 SQ.IN
SOFFIT VENT 38.4 SQ.IN. : 6" CONT SCREEN VENT 6" CONT. VENT : 38.4 SQ.IN./LF = 38.4/36 = 2

LOWER ROOF VENT CALCULATION-PLAN C
ATTIC AREA MAX. 100 S.F. CALCULATE NET FREE VENT AREA: 100 S.F./150 = 1.07 S.F. (1 IN 150 RULED) CONVERT TO SQ. INCHES : 1.07 SF X 144 = 153.6 SQ.IN
SOFFIT VENT 153.6 SQ.IN. : 6" CONT SCREEN VENT 6" CONT. VENT : 153.6 SQ.IN./LF = 153.6/36 = 5



2 REAR ELEVATION
1/8" = 1'-0"



4 RIGHT SIDE
1/8" = 1'-0"



3 LEFT SIDE
1/8" = 1'-0"



1 FRONT ELEVATION
1/8" = 1'-0"

I:\DR HORTON\BELMONT\BUILDING 6-PLEX-A.rvt

ELEVATIONS

SHEET INFORMATION
6- UNIT BUILDING TYPE A

PROJECT INFORMATION
BELMONT
PALM SPRINGS, FLORIDA

D·R·HORTON
America's Builder
www.drhorton.com
6123 LYONS ROAD, COCONUT CREEK, FL 33073 Tel: (954) 949-3000 Fax: (954) 928-8921

SPECIALTY ENGINEERING CONSULTANTS, Inc
1599 SW 30th AVE.
SUITE #20
BOYNTON BEACH, FL 33426

DADE - BROWARD - PALM BEACH
FL. CA. #009217

561 - 752 - 5440 OFFICE
561 - 752 - 5542 FAX

FILE NAME.
SCALE
DATE 5/28/2021
RVD. BY Checker
DRWN. BY Author

REVISION SCHEDULE		
NO	DATE	Description

SEAL
D. ADAM LeBLANC, PE FL #77012

SHEET #
A-2

ELECTRICAL LEGEND

- SURFACE MOUNTED LIGHT
- WALL MOUNTED LIGHT
- RECESSED HIGH HAT
- RECESSED VAPOR PROOF LIGHT
- SURFACE MOUNTED FLUORESCENT FIXTURE
- RECESSECED FLUORESCENT FIXTURE
- HEAT LAMP/ EXHAUST FAN COMBINATION
- FLOOD LIGHT
- JUNCTION BOX
- EXHAUST FAN
- TRACK LIGHTING FIXTURE
- SWITCH
- 3 WAY SWITCH
- 4 WAY SWITCH
- DIMMER SWITCH
- PUSH BUTTON-GARAGE DR OPENER
- PUSH BUTTON-GARAGE DR OPENER
- TIME SWITCH
- WEATHER PROOF SWITCH
- DEDICATED RECEPTACLE
- DUPLEX RECEPTACLE 110/120
- QUADRUPLEX RECEPTACLE
- FLOOR RECEPTACLE
- BREAKER PANEL
- ELECTRIC METER
- MAIN DISCONNECT PANEL
- DEDICATED DISCONNECT PANEL
- ROUTED WIRE
- TELEPHONE JACK
- TELEVISION JACK
- INTERCOM
- SECURITY SYSTEM
- CHIMES
- THERMOSTAT
- TIMER RELAY
- SMOKE DETECTOR
- GARAGE DOOR OPENER
- PADDLE FAN
- SWITCH ACTIVATED RECEPTACLE
- WEATHER PROOF RECEPTACLE
- GROUND FAULT INTERRUPTER RECEPTACLE

GENERAL NOTES PER CODE IN EFFECT: FBC 2020, 7TH EDITION,NEC 2017

1. ALL RECEPTACLES TO BE TAMPER RESISTANT THROUGHOUT THE HOUSE (NEC 406.11)
2. ALL 15 AND 20-AMP LIGHTING AND RECEPTACLE CIRCUITS (EXCEPT WHERE GFIC IS REQUIRED) MUST BE ARC-FUALT, INCLUDING DINING RECEPTACLES (NEC 210.12)
3. ALL EXTERIOR RECEPTACLES WILL NEED TO BE WEATHER RESISTANT (NEC 406.8)
4. POOL PUMP/SPA MOTORS WILL REQUIRE GFCI PROTECTION (NEC 680.22 B)
5. GFI PROTECTION WILL BE REQUIRED FOR ALL GARAGE DOOR OPENERS (NEC 210.8)
6. GROUND BAR TO BE ADDED AT SERVICE ENTRANCE TO INTER SYSTEMS (NEC 250.94).

ELECTRICAL PANEL 'A'

NO	POLE TRIP	KVA	DESCRIPTION	WIRE	NO	POLE TRIP	KVA	DESCRIPTION	WIRE
1	2/60	5.0	AIR HANDLER	# 6	2	2/25	4.5	HOTWATER HEATER	#10
3					4				
5	2/50		A/C COMP.	# 6	6	2/50	12.0	RANGE/OVEN	#6
7					8				
9	1/20	1.0	DISH WASHER GFI	#12	10	2/30	5.0	DRYER	#10
11	1/20	1.0	REFRIGERATOR GFI	#12	12				
13	1/20	1.5	MICROWAVE/HOOD FAN	#12	14	1/20	1.5	SMOKE/CABON DETECTOR GFI (AF)	#12
15	1/20	1.5	WASHER GFI	#12	16	1/20	1.5	GARAGE DOOR OPENER GFI (AF)	#12
17	1/20		GENERAL LIGHTING GARAGE (AF)	#12	18	1/20	1.5	DINING ROOM REC (AF)	#12
19	1/20	1.5	SMALL APPLIANCES (AF)	#12	20	1/20	1.5	SMALL APPLIANCES (AF)	#12
21	1/15		GENERAL LIGHTING MASTER (AF)	#14	22	1/20		GENERAL LIGHTING LAUNDRY(AF)	#12
23	1/15		GENERAL LIGHTING MBATH (AF)	#14	24	1/15		GENERAL LIGHTING LIVING/DINING (AF)	#14
25	1/15		GENERAL LIGHTING BR2/BATH 2 (AF)	#14	26	1/15		GENERAL LIGHTING KITCHEN/FOYER/P.R.(AF)	#14
27	1/15		GENERAL LIGHTING HALLWAY (AF)	#14	28	1/15		EXTERIOR LIGHTING (AF)	#14
29	1/20	1.5	DISPOSAL GFI	#12	30	1/20		BATHROOM REC. (GFI)	#12
31	1/15		GENERAL LIGHTING BR3 (AF)	#14	32				
33					34				
35					36				
37					38				
39			SPARE		40			SPARE	
41			SPARE		42			SPARE	

1826	sq. ft. @ 3 watts sq. ft	5478	watts
3	Small Appliance Circuits @ 1500 watts ea. **(Minimum is 2)**	4500	watts
1	Laundry Circuit(s) @ 1500 watts ea. **(Minimum is 1)**	1500	watts
12000	Range **(Nameplate Rating)**	12000	watts
4500	Electric Water Heater	4500	watts
5000	Electric Clothes Dryer **(Enter larger: 5000 Watts or Nameplate Rating)**	5000	watts
1000	Dishwasher	1000	watts
1500	Disposal	1500	watts
1000	Refrigerator	1000	watts
1500	Microwave Oven	1500	watts
1500	Garage Door Opener	1500	watts
		0	watts
		0	watts
		0	watts
		0	watts
		0	watts
	Total Calculated Load (less HVAC)	**39478**	**watts**

Service Demand

General Load:

First 10kw of Total Calculated Load (less HVAC) @ 100%	10000	watts
Remainder of Total Calculated Load (less HVAC) @ 40%	11791.2	watts
Total General Load	**21791.2**	**watts**

HVAC Load:

10000	Air Conditioning Load @ 100% (Volts X Amps = Watts)	8000	watts
	Furnace/Air Handler Load (Volts X Amps = Watts)	0	watts
	Total HVAC Load	**8000**	**watts**

Total General Load	+	Total HVAC Load	=	Calculated Service Load
21791.2 watts	+	8000 watts	=	29791.2 watts

Calcuated Service Load	,	Service Voltage	=	Minimum Service Ampacity
29791.2 watts	,	240 volts	=	124.13 amps

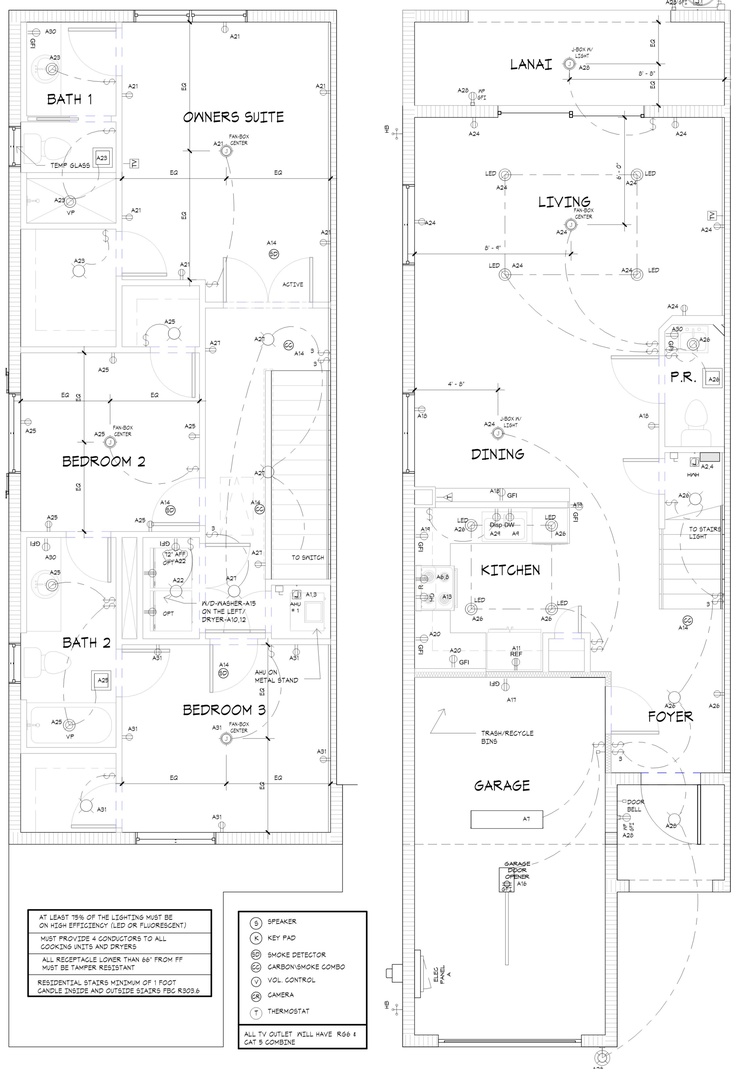

4 2ND FLR ELECTRIC
1/4" = 1'-0"

3 1ST FLR ELECTRIC
1/4" = 1'-0"

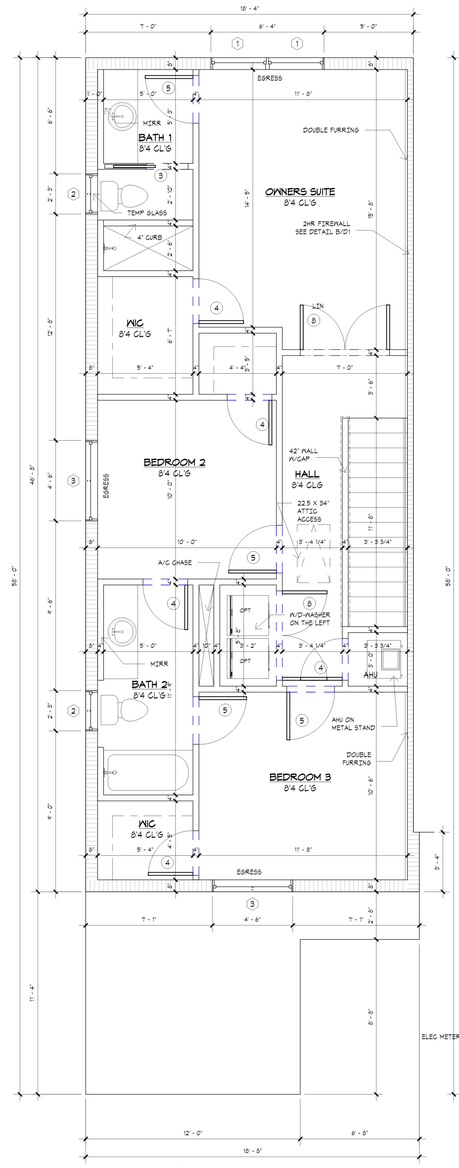

2 2nd Flr
1/4" = 1'-0"

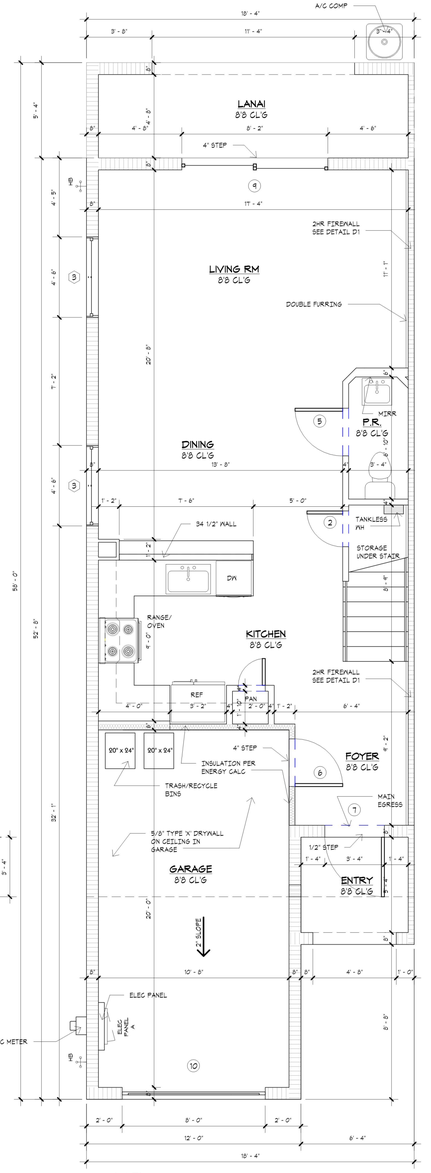

1 1st Flr
1/4" = 1'-0"

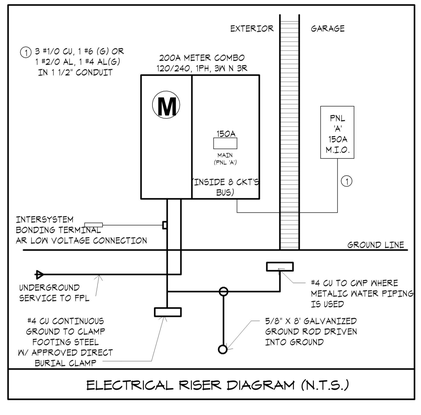

ELECTRICAL RISER DIAGRAM (N.T.S.)

GENERAL NOTES

1. ALL WINDOWS AND SLIDING DOOR GLASS SHALL BE : U-FACTOR = 0.54 AND SHGC = 0.65
2. OMITTED
3. DRYER MUST VENT TO OUTSIDE.
4. SET HOTWATER HEATER AT FIN. FLR. LEVEL
5. ALL MECHANICAL FANS MUST BE VENTED TO OUTSIDE.
6. ALL BATH ROOM FLOOR AND BASE SHALL BE IMPERVIOUS MATERIAL WHERE REQUIRED BY LOCAL BUILDING CODE.
7. HVAC CONTRACTOR TO PROVIDE ELECTRICAL BREAKERS IN AIR HANDLER.
8. ALL BATHROOM FIXTURE OUTLETS TO BE 66" AFF OR AS PER BUILDER SPECIFICATIONS.
9. PROVIDE RECEPTACAL FOR MICRO/HOOD FAN 65" A.F.F. CENTER RANGE SPACE.
10. SMOKE DETECTORS SHALL BE HARD WIRE 110V W/ BATTERY BACK UP. MULTIPLE DETECTORS SHALL BE INTERCONNECTED.
11. EGRESS WINDOWS SHALL HAVE A CLEAR OPENING OF NOT LESS THAN 20 INCHES IN WIDTH, 24 INCHES IN HEIGHT, AND 5.7 SQ.FT. IN AREA. THE BOTTOM OF THE OPENING SHALL BE NOT MORE THAN 44" OFF THE FLOOR.

NOTE:
CONTRACTORS MUST VERIFY OPENINGS WITH DOORS AND WINDOWS MANUFACTURES.

AREA CALCULATION

Comments	Area
1ST FLOOR LIVING AREA	629 SF
2ND FLOOR LIVING AREA	817 SF
	1446 SF
GARAGE	244 SF
LANAI	98 SF
ENTRY	38 SF
	380 SF
Grand total	1826 SF

WINDOWS SCHEDULE

Mark	Rough Opening Width	Rough Opening Height	Description	Count
1	3' - 2"	4' - 11"	245 SH Egress	2
2	2' - 3"	3' - 3"	1/2 335H	2
3	4' - 6"	4' - 11"	2455H	4
Grand total: 8				8

DOOR SCHEDULE1

Mark	Description	Rough Width	Rough Height	Finish Comment
1	1668 INTERIOR DOOR	1' - 6"	6' - 8"	
2	2068 INTERIOR DOOR	2' - 0"	6' - 8"	
3	2668 POCKET DOOR	2' - 6"	6' - 8"	
4	2668 INTERIOR DOOR	2' - 6"	6' - 8"	
5	2868 INTERIOR DOOR	2' - 8"	6' - 8"	
6	2868 SC DOOR TO GARAGE	2' - 8"	6' - 8"	20 MIN RATING/AUTO CLOSURE
7	3080 SC/MTL FRONT DOOR	3' - 4"	8' - 2"	
8	2-2668 INTERIOR DOOR	5' - 0"	6' - 8"	
9	8080 XX SGD	8' - 2"	6' - 8"	
10	8'0 x 8'0 Garage Door	8' - 0"	8' - 0"	
Grand total				

FLOOR/ELECT PLANS

SHEET INFORMATION
PLAN C
LEFT

PROJECT INFORMATION
BELMONT
PALM SPRINGS, FLORIDA

D·R·HORTON
America's Builder
www.drhorton.com
6123 LYONS ROAD, COCONUT CREEK, FL 33073 Tel: (954) 949-3000 Fax: (954) 928-8921

SPECIALTY ENGINEERING CONSULTANTS, Inc
1599 SW 30th AVE.
SUITE #20
BOYNTON BEACH, FL 33426

DADE - BROWARD - PALM BEACH
FL. CA. #009217

561 - 752 - 5440 OFFICE
561 - 752 - 5542 FAX

FILE NAME.
SCALE
DATE 5/28/2021
RVD. BY
DRWN. BY C.L.
REVISION

SEAL
D. ADAM LeBLANC, PE FL #77012

SHEET #
CL-1

I:\DR HORTON\BELMONT\MASTER PLANS\PLAN-CL MASTER.rvt

ELECTRICAL LEGEND

- SURFACE MOUNTED LIGHT
- WALL MOUNTED LIGHT
- RECESSED HIGH HAT
- RECESSED VAPOR PROOF LIGHT
- SURFACE MOUNTED FLUORESCENT FIXTURE
- RECESSECED FLUORESCENT FIXTURE
- HEAT LAMP/ EXHAUST FAN COMBINATION
- FLOOD LIGHT
- JUNCTION BOX
- EXHAUST FAN
- TRACK LIGHTING FIXTURE
- SWITCH
- 3 WAY SWITCH
- 4 WAY SWITCH
- DIMMER SWITCH
- PUSH BUTTON-GARAGE DR OPENER
- PUSH BUTTON-GARAGE DR OPENER
- TIME SWITCH
- WEATHER PROOF SWITCH
- DEDICATED RECEPTACLE
- DUPLEX RECEPTACLE 110/120
- QUADRUPLEX RECEPTACLE
- FLOOR RECEPTACLE
- BREAKER PANEL
- ELECTRIC METER
- MAIN DISCONNECT PANEL
- DEDICATED DISCONNECT PANEL
- ROUTED WIRE
- TELEPHONE JACK
- TELEVISION JACK
- INTERCOM
- SECURITY SYSTEM
- CHIMES
- THERMOSTAT
- TIMER RELAY
- SMOKE DETECTOR
- GARAGE DOOR OPENER
- PADDLE FAN
- SWITCH ACTIVATED RECEPTACLE
- WEATHER PROOF RECEPTACLE
- GROUND FAULT INTERRUPTER RECEPTACLE

GENERAL NOTES PER CODE IN EFFECT: FBC 2020, 7TH EDITION,NEC 2017

1. ALL RECEPTACLES TO BE TAMPER RESISTANT THROUGHOUT THE HOUSE (NEC 406.11)
2. ALL 15 AND 20-AMP LIGHTING AND RECEPTACLE CIRCUITS (EXCEPT WHERE GFIC IS REQUIRED) MUST BE ARC-FUALT, INCLUDING DINING RECEPTACLES (NEC 210.12)
3. ALL EXTERIOR RECEPTACLES WILL NEED TO BE WEATHER RESISTANT (NEC 406.8)
4. POOL PUMP/SPA MOTORS WILL REQUIRE GFCI PROTECTION (NEC 680.22 B)
5. GFI PROTECTION WILL BE REQUIRED FOR ALL GARAGE DOOR OPENERS (NEC 210.8)
6. GROUND BAR TO BE ADDED AT SERVICE ENTRANCE TO INTER SYSTEMS (NEC 250.94).

ELECTRICAL PANEL 'A'

NO	POLE TRIP	KVA	DESCRIPTION	WIRE	NO	POLE TRIP	KVA	DESCRIPTION	WIRE
1	2/60	5.0	AIR HANDLER	# 6	2	2/25	4.5	HOTWATER HEATER	#10
3					4				
5	2/50		A/C COMP.	# 6	6	2/50	12.0	RANGE/OVEN	#6
7					8				
9	1/20	1.0	DISH WASHER GFI	#12	10	2/30	5.0	DRYER	#10
11	1/20	1.0	REFRIGERATOR GFI	#12	12				
13	1/20	1.5	MICROWAVE/HOOD FAN	#12	14	1/20	1.5	SMOKE/CABON DETECTOR GFI (AF)	#12
15	1/20	1.5	WASHER GFI	#12	16	1/20	1.5	GARAGE DOOR OPENER GFI (AF)	#12
17	1/20		GENERAL LIGHTING GARAGE (AF)	#12	18	1/20	1.5	DINING ROOM REC (AF)	#12
19	1/20	1.5	SMALL APPLIANCES (AF)	#12	20	1/20	1.5	SMALL APPLIANCES (AF)	#12
21	1/15		GENERAL LIGHTING MASTER (AF)	#14	22	1/20		GENERAL LIGHTING LAUNDRY(AF)	#12
23	1/15		GENERAL LIGHTING MBATH (AF)	#14	24	1/15		GENERAL LIGHTING LIVING/DINING (AF)	#14
25	1/15		GENERAL LIGHTING BR2/BATH 2 (AF)	#14	26	1/15		GENERAL LIGHTING KITCHEN/FOYER/P.R.(AF)	#14
27	1/15		GENERAL LIGHTING HALLWAY (AF)	#14	28	1/15		EXTERIOR LIGHTING (AF)	#14
29	1/20	1.5	DISPOSAL GFI	#12	30	1/20		BATHROOM REC. (GFI)	#12
31	1/15		GENERAL LIGHTING BR3 (AF)	#14	32				
33					34				
35					36				
37					38				
39			SPARE		40			SPARE	
41			SPARE		42			SPARE	

1769	sq. ft. @ 3 watts sq. ft	5307	watts
3	Small Appliance Circuits @ 1500 watts ea. **(Minimum is 2)**	4500	watts
1	Laundry Circuit(s) @ 1500 watts ea. **(Minimum is 1)**	1500	watts
12000	Range **(Nameplate Rating)**	12000	watts
4500	Electric Water Heater	4500	watts
5000	Electric Clothes Dryer **(Enter larger: 5000 Watts or Nameplate Rating)**	5000	watts
1000	Dishwasher	1000	watts
1500	Disposal	1500	watts
1000	Refrigerator	1000	watts
1500	Microwave Oven	1500	watts
1500	Garage Door Opener	1500	watts
		0	watts
		0	watts
		0	watts
		0	watts
		0	watts
	Total Calculated Load (less HVAC)	**39307**	**watts**

Service Demand

General Load:

First 10kw of Total Calculated Load (less HVAC) @ 100%	10000	watts
Remainder of Total Calculated Load (less HVAC) @ 40%	11722.8	watts
Total General Load	**21722.8**	**watts**

HVAC Load:

10000	Air Conditioning Load @ 100% (Volts X Amps = Watts)	5000	watts
	Furnace/Air Handler Load (Volts X Amps = Watts)	0	watts
	Total HVAC Load	**5000**	**watts**

Total General Load		+	Total HVAC Load		=	Calculated Service Load	
21722.8	watts	+	5000	watts	=	26722.8	watts

Calcuated Service Load		/	Service Voltage		=	Minimum Service Ampacity	
26722.8	watts	/	240	volts	=	111.35	amps

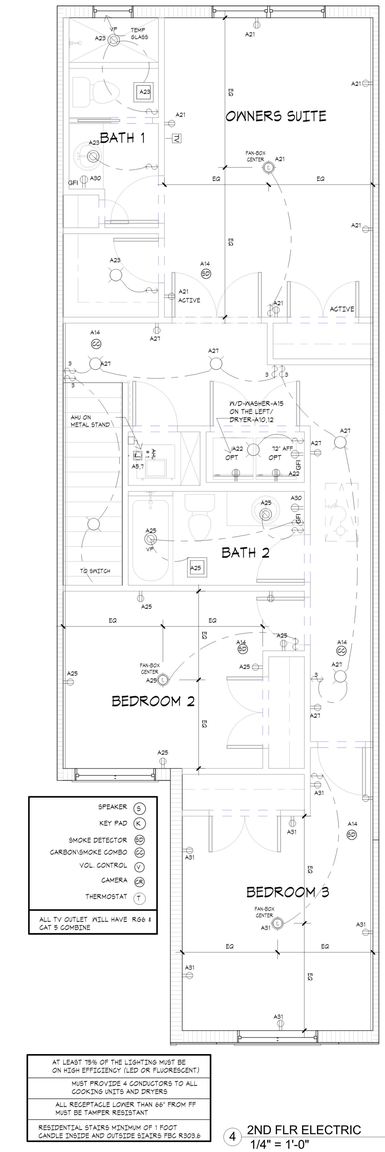

4 2ND FLR ELECTRIC
1/4" = 1'-0"

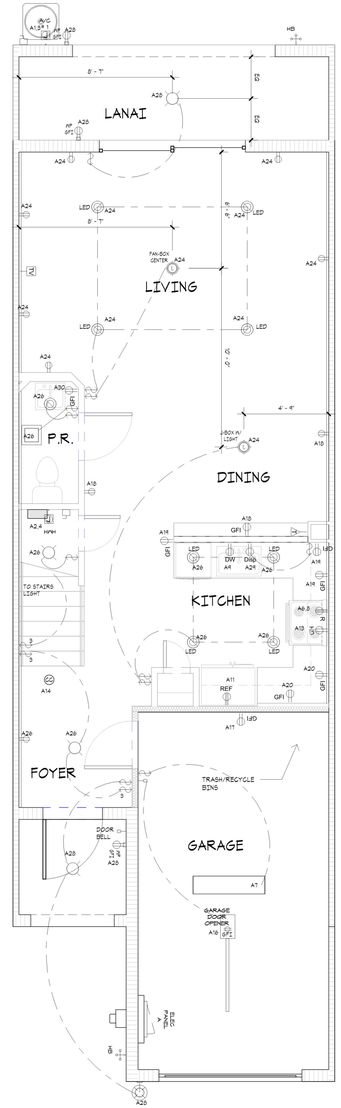

3 1ST FLR ELECTRIC
1/4" = 1'-0"

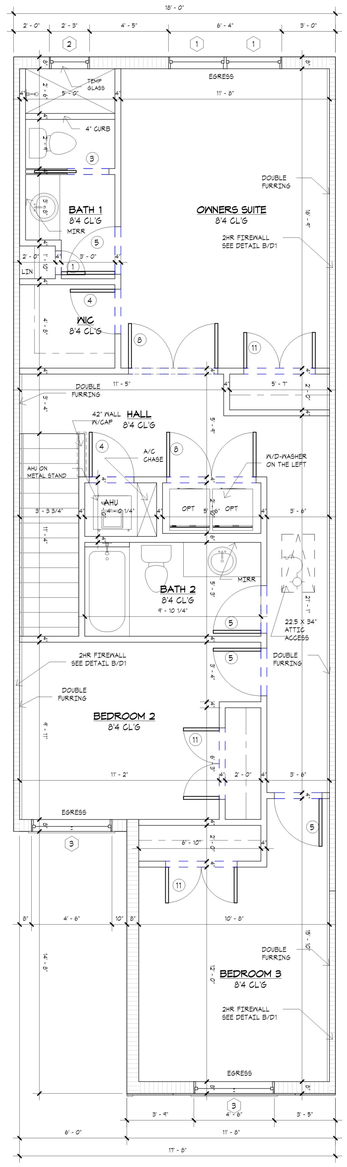

2 2nd Flr
1/4" = 1'-0"

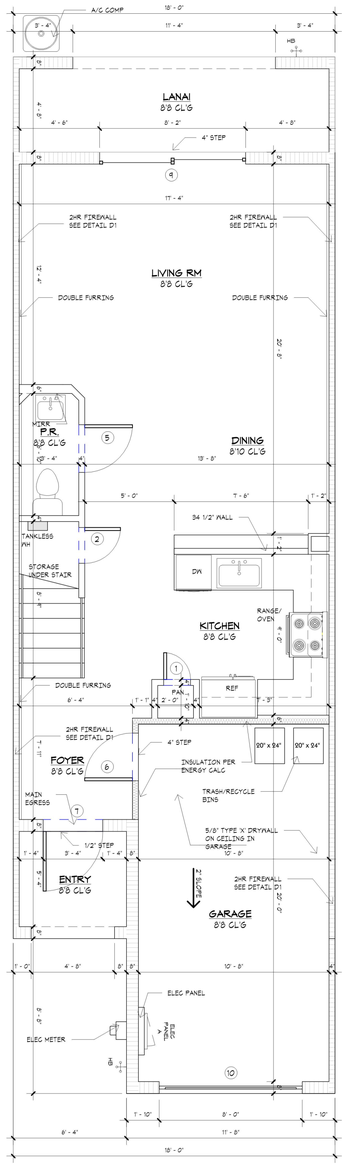

1 1st Flr
1/4" = 1'-0"

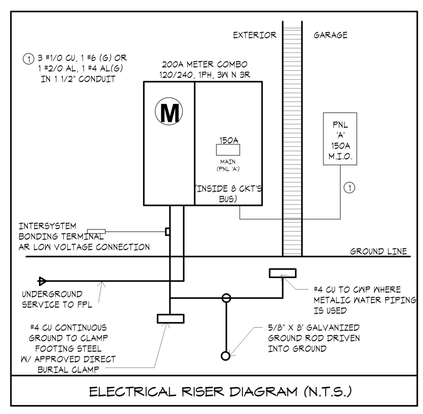

ELECTRICAL RISER DIAGRAM (N.T.S.)

GENERAL NOTES

1. ALL WINDONS AND SLIDING DOOR GLASS SHALL BE : U-FACTOR = 0.54 AND SHGC = 0.65
2. OMITTED
3. DRYER MUST VENT TO OUTSIDE.
4. SET HOTWATER HEATER AT FIN. FLR. LEVEL
5. ALL MECHANICAL FANS MUST BE VENTED TO OUTSIDE.
6. ALL BATH ROOM FLOOR AND BASE SHALL BE IMPERVIOUS MATERIAL WHERE REQUIRED BY LOCAL BUILDING CODE.
7. HVAC CONTRACTOR TO PROVIDE ELECTRICAL BREAKERS IN AIR HANDLER.
8. ALL BATHROOM FIXTURE OUTLETS TO BE 66" AFF OR AS PER BUILDER SPECIFICATIONS.
9. PROVIDE RECEPTACAL FOR MICRO/HOOD FAN 65" A.F.F. CENTER RANGE SPACE.
10. SMOKE DETECTORS SHALL BE HARD WIRE 110V W/ BATTERY BACK UP. MULTIPLE DETECTORS SHALL BE INTERCONNECTED.
11. EGRESS WINDOWS SHALL HAVE A CLEAR OPENING OF NOT LESS THAN 20 INCHES IN WIDTH, 24 INCHES IN HEIGHT, AND 5.7 SQ.FT. IN AREA. THE BOTTOM OF THE OPENING SHALL BE NOT MORE THAN 44" OFF THE FLOOR.

NOTE:
CONTRACTORS MUST VERIFY OPENINGS WITH DOORS AND WINDOWS MANUFACTURES.

AREA CALCULATION

Comments	Area
1ST FLOOR LIVING AREA	618 SF
2ND FLOOR LIVING AREA	914 SF
	1532 SF
GARAGE	237 SF
LANAI	96 SF
ENTRY	38 SF
	371 SF
Grand total	1903 SF

WINDOWS SCHEDULE

Mark	Rough Opening Width	Rough Opening Height	Description	Count
1	3' - 2"	4' - 11"	2455H Egress	2
2	2' - 3"	3' - 3"	1/2 335H	1
3	4' - 6"	4' - 11"	3455H	2
Grand total: 5				5

DOOR SCHEDULE1

Mark	Description	Rough Width	Rough Height	Finish Comment
1	1668 Interior Door	1' - 6"	6' - 8"	
2	2068 INTERIOR DOOR	2' - 0"	6' - 8"	
3	2668 POCKET DOOR	2' - 6"	6' - 8"	
4	2668 INTERIOR DOOR	2' - 6"	6' - 8"	
5	2868 INTERIOR DOOR	2' - 8"	6' - 8"	
6	2868 SC DOOR TO GARAGE	2' - 8"	6' - 8"	20 MIN RATING/AUTO CLOSURE
7	3080 SC/MTL FRONT DOOR	3' - 4"	8' - 2"	
8	2-2668 INTERIOR DOOR	5' - 0"	6' - 8"	
9	8068 XX SGD	8' - 2"	6' - 8"	
10	8'0 x 8'0 Garage Door	8' - 0"	8' - 0"	
11	2-2068 INTERIOR DOOR	4' - 0"	6' - 8"	
Grand total				

FLOOR/ELECT PLANS

SHEET INFORMATION
PLAN A
RIGHT

PROJECT INFORMATION
BELMONT
PALM SPRINGS, FLORIDA

D·R·HORTON
America's Builder
www.drhorton.com
6123 LYONS ROAD, COCONUT CREEK, FL 33073 Tel: (954) 949-3000 Fax: (954) 928-8921

SPECIALTY ENGINEERING CONSULTANTS, Inc
1599 SW 30th AVE.
SUITE #20
BOYNTON BEACH, FL 33426

DADE - BROWARD - PALM BEACH
FL. CA. #009217

561 - 752 - 5440 OFFICE
561 - 752 - 5542 FAX

FILE NAME.

SCALE

DATE 5/28/2021

RVD. BY

DRWN. BY C.L.

REVISION

SEAL
D. ADAM LeBLANC, PE FL #77012

SHEET #
AR-1

I:\DR HORTON\BELMONT\MASTER PLANS\PLAN-AR MASTER.rvt

ELECTRICAL LEGEND

- SURFACE MOUNTED LIGHT
- WALL MOUNTED LIGHT
- RECESSED HIGH HAT
- RECESSED VAPOR PROOF LIGHT
- SURFACE MOUNTED FLUORESCENT FIXTURE
- RECESSECED FLUORESCENT FIXTURE
- HEAT LAMP/ EXHAUST FAN COMBINATION
- FLOOD LIGHT
- JUNCTION BOX
- EXHAUST FAN
- TRACK LIGHTING FIXTURE
- SWITCH
- 3 WAY SWITCH
- 4 WAY SWITCH
- DIMMER SWITCH
- PUSH BUTTON-GARAGE DR OPENER
- PUSH BUTTON-GARAGE DR OPENER
- TIME SWITCH
- WEATHER PROOF SWITCH
- DEDICATED RECEPTACLE
- DUPLEX RECEPTACLE 110/120
- QUADRUPLEX RECEPTACLE
- FLOOR RECEPTACLE
- BREAKER PANEL
- ELECTRIC METER
- MAIN DISCONNECT PANEL
- DEDICATED DISCONNECT PANEL
- ROUTED WIRE
- TELEPHONE JACK
- TELEVISION JACK
- INTERCOM
- SECURITY SYSTEM
- CHIMES
- THERMOSTAT
- TIMER RELAY
- SMOKE DETECTOR
- GARAGE DOOR OPENER
- PADDLE FAN
- SWITCH ACTIVATED RECEPTACLE
- WEATHER PROOF RECEPTACLE
- GROUND FAULT INTERRUPTER RECEPTACLE

GENERAL NOTES PER CODE IN EFFECT: FBC 2020, 7TH EDITION,NEC 2020

1. ALL RECEPTACLES TO BE TAMPER RESISTANT THROUGHOUT THE HOUSE (NEC 406.11)
2. ALL 15 AND 20-AMP LIGHTING AND RECEPTACLE CIRCUITS (EXCEPT WHERE GFIC IS REQUIRED) MUST BE ARC-FUALT, INCLUDING DINING RECEPTACLES (NEC 210.12)
3. ALL EXTERIOR RECEPTACLES WILL NEED TO BE WEATHER RESISTANT (NEC 406.8)
4. POOL PUMP/SPA MOTORS WILL REQUIRE GFCI PROTECTION (NEC 680.22 B)
5. GFI PROTECTION WILL BE REQUIRED FOR ALL GARAGE DOOR OPENERS (NEC 210.8)
6. GROUND BAR TO BE ADDED AT SERVICE ENTRANCE TO INTER SYSTEMS (NEC 250.94).

ELECTRICAL PANEL 'A'

NO	POLE TRIP	KVA	DESCRIPTION	WIRE	NO	POLE TRIP	KVA	DESCRIPTION	WIRE
1	2/60	5.0	AIR HANDLER	#8	2	2/25	4.5	HOTWATER HEATER	#10
3					4				
5	2/50		A/C COMP.	#8	6	2/50	12.0	RANGE/OVEN	#6
7					8				
9	1/20	1.0	DISH WASHER GFI	#12	10	2/30	5.0	DRYER	#10
11	1/20	1.0	REFRIGERATOR GFI	#12	12				
13	1/20	1.5	MICROWAVE/HOOD FAN	#12	14	1/20	1.5	SMOKE/CABON DETECTOR GFI (AF)	#12
15	1/20	1.5	WASHER GFI	#12	16	1/20	1.5	GARAGE DOOR OPENER GFI (AF)	#12
17	1/20		GENERAL LIGHTING GARAGE (AF)	#12	18	1/20	1.5	DINING ROOM REC (AF)	#12
19	1/20	1.5	SMALL APPLIANCES (AF)	#12	20	1/20	1.5	SMALL APPLIANCES (AF)	#12
21	1/15		GENERAL LIGHTING MASTER (AF)	#14	22	1/20		GENERAL LIGHTING LAUNDRY(AF)	#12
23	1/15		GENERAL LIGHTING MBATH (AF)	#14	24	1/15		GENERAL LIGHTING LIVING/DINING (AF)	#14
25	1/15		GENERAL LIGHTING BR2/BATH 2 (AF)	#14	26	1/15		GENERAL LIGHTING KITCHEN/FOYER/P.R.(AF)	#14
27	1/15		GENERAL LIGHTING HALLWAY (AF)	#14	28	1/15		EXTERIOR LIGHTING (AF)	#14
29	1/20	1.5	DISPOSAL GFI	#12	30	1/20		BATHROOM REC. (GFI)	#12
31	1/15		GENERAL LIGHTING BR3 (AF)	#14	32				
33					34				
35					36				
37					38				
39			SPARE		40			SPARE	
41			SPARE		42			SPARE	

1769	sq. ft. @ 3 watts sq. ft	5307	watts
3	Small Appliance Circuits @ 1500 watts ea. **(Minimum is 2)**	4500	watts
1	Laundry Circuit(s) @ 1500 watts ea. **(Minimum is 1)**	1500	watts
12000	Range **(Nameplate Rating)**	12000	watts
4500	Electric Water Heater	4500	watts
5000	Electric Clothes Dryer **(Enter larger: 5000 Watts or Nameplate Rating)**	5000	watts
1000	Dishwasher	1000	watts
1500	Disposal	1500	watts
1000	Refrigerator	1000	watts
1500	Microwave Oven	1500	watts
1500	Garage Door Opener	1500	watts
		0	watts
		0	watts
		0	watts
		0	watts
		0	watts
	Total Calculated Load (less HVAC)	**39307**	**watts**

Service Demand

General Load:

First 10kw of Total Calculated Load (less HVAC) @ 100%	10000	watts
Remainder of Total Calculated Load (less HVAC) @ 40%	11722.8	watts
Total General Load	**21722.8**	**watts**

HVAC Load:

10000	Air Conditioning Load @ 100% (Volts X Amps = Watts)	5000	watts
	Furnace/Air Handler Load (Volts X Amps = Watts)	0	watts
	Total HVAC Load	**5000**	**watts**

Total General Load		+	Total HVAC Load		=	Calculated Service Load	
21722.8	watts	+	5000	watts	=	26722.8	watts

Calcuated Service Load		,	Service Voltage		=	Minimum Service Ampacity	
26722.8	watts	,	240	volts	=	111.35	amps

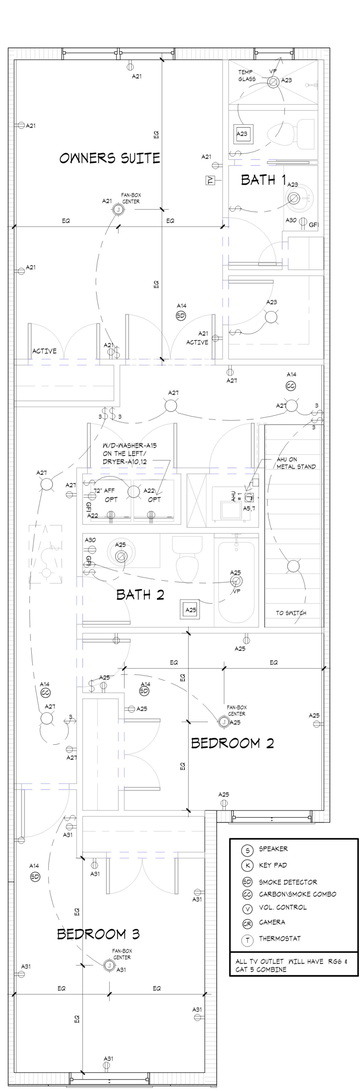

4 2ND FLR ELECTRIC
1/4" = 1'-0"

AT LEAST 75% OF THE LIGHTING MUST BE ON HIGH EFFICIENCY (LED OR FLUORESCENT)
MUST PROVIDE 4 CONDUCTORS TO ALL COOKING UNITS AND DRYERS
ALL RECEPTACLE LOWER THAN 66" FROM FF MUST BE TAMPER RESISTANT
RESIDENTIAL STAIRS MINIMUM OF 1 FOOT CANDLE INSIDE AND OUTSIDE STAIRS FBC R303.6

- (S) SPEAKER
- (K) KEY PAD
- (SD) SMOKE DETECTOR
- (SC) CARBON/SMOKE COMBO
- (V) VOL CONTROL
- (CA) CAMERA
- (T) THERMOSTAT

ALL TV OUTLET WILL HAVE RG6 & CAT 5 COMBINE

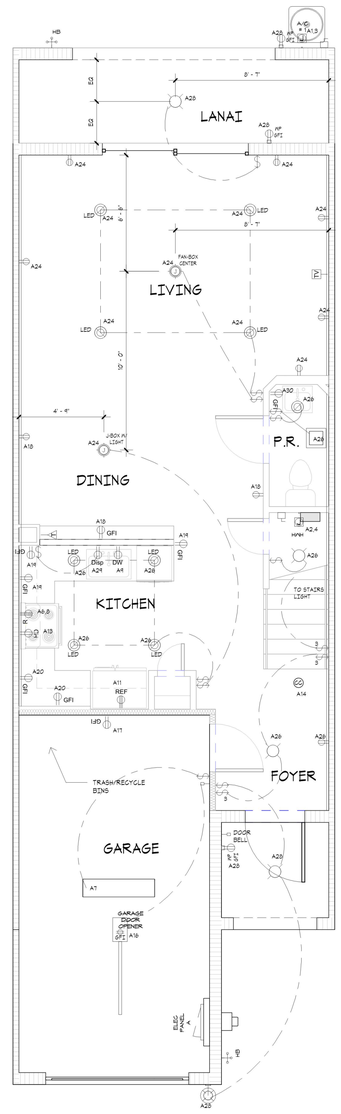

3 1ST FLR ELECTRIC
1/4" = 1'-0"

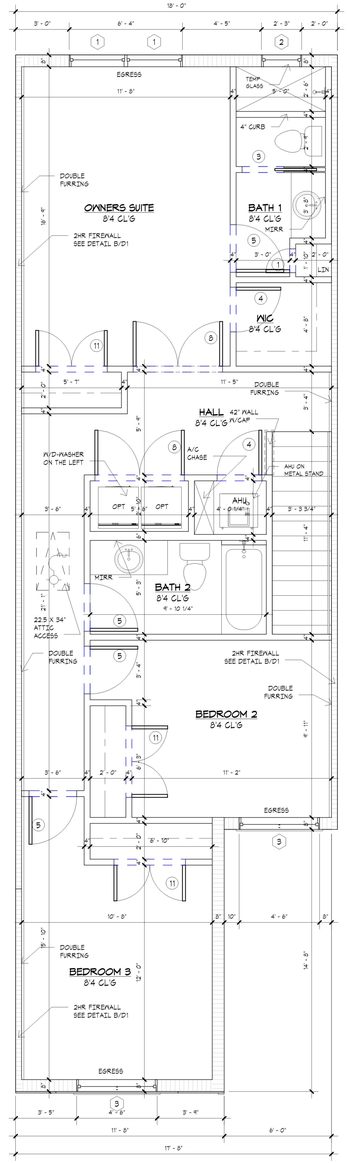

2 2nd Flr
1/4" = 1'-0"

1 1st Flr
1/4" = 1'-0"

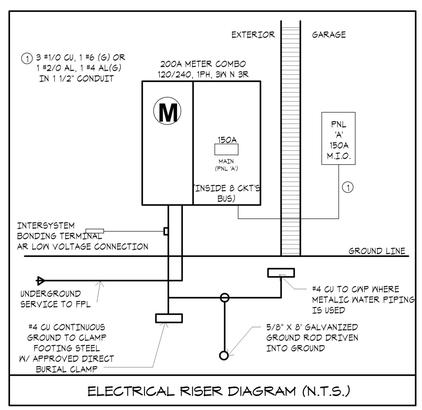

ELECTRICAL RISER DIAGRAM (N.T.S.)

GENERAL NOTES

1. ALL WINDONS AND SLIDING DOOR GLASS SHALL BE : U-FACTOR = 0.54 AND SHGC = 0.65
2. OMITTED
3. DRYER MUST VENT TO OUTSIDE.
4. SET HOTWATER HEATER AT FIN. FLR. LEVEL
5. ALL MECHANICAL FANS MUST BE VENTED TO OUTSIDE.
6. ALL BATH ROOM FLOOR AND BASE SHALL BE IMPERVIOUS MATERIAL WHERE REQUIRED BY LOCAL BUILDING CODE.
7. HVAC CONTRACTOR TO PROVIDE ELECTRICAL BREAKERS IN AIR HANDLER.
8. ALL BATHROOM FIXTURE OUTLETS TO BE 86" AFF OR AS PER BUILDER SPECIFICATIONS.
9. PROVIDE RECEPTACAL FOR MICRO/HOOD FAN 65" A.F.F. CENTER RANGE SPACE.
10. SMOKE DETECTORS SHALL BE HARD WIRE 110V W/ BATTERY BACK UP. MULTIPLE DETECTORS SHALL BE INTERCONNECTED.
11. EGRESS WINDONS SHALL HAVE A CLEAR OPENING OF NOT LESS THAN 20 INCHES IN WIDTH, 24 INCHES IN HEIGHT, AND 5.7 SQ.FT. IN AREA. THE BOTTOM OF THE OPENING SHALL BE NOT MORE THAN 44" OFF THE FLOOR.

NOTE:
CONTRACTORS MUST VERIFY OPENINGS WITH DOORS AND WINDONS MANUFACTURES.

AREA CALCULATION

Comments	Area
1ST FLOOR LIVING AREA	618 SF
2ND FLOOR LIVING AREA	914 SF
	1532 SF
GARAGE	237 SF
LANAI	96 SF
ENTRY	38 SF
	371 SF
Grand total	1903 SF

WINDONS SCHEDULE

Mark	Rough Opening Width	Rough Opening Height	Description	Count
1	3' - 2"	4' - 11"	2455H Egress	2
2	2' - 3"	3' - 3"	1/2 335H	1
3	4' - 6"	4' - 11"	3455H	2
Grand total: 5				5

DOOR SCHEDULE1

Mark	Description	Rough Width	Rough Height	Finish Comment
1	1668 Interior Door	1' - 8"	6' - 8"	
2	2068 INTERIOR DOOR	2' - 0"	6' - 8"	
3	2668 POCKET DOOR	2' - 6"	6' - 8"	
4	2668 INTERIOR DOOR	2' - 6"	6' - 8"	
5	2868 INTERIOR DOOR	2' - 8"	6' - 8"	
6	2868 SC DOOR TO GARAGE	2' - 8"	6' - 8"	20 MIN RATING/AUTO CLOSURE
7	3080 SC/MTL FRONT DOOR	3' - 4"	8' - 2"	
8	2-2668 INTERIOR DOOR	5' - 0"	6' - 8"	
9	8068 XX SGD	8' - 2"	6' - 8"	
10	8'0 x 8'0 Garage Door	8' - 0"	8' - 0"	
11	2-2068 INTERIOR DOOR	4' - 0"	6' - 8"	
Grand total				

FLOOR/ELECT PLANS

SHEET INFORMATION
PLAN A
LEFT

PROJECT INFORMATION
BELMONT
PALM SPRINGS, FLORIDA

D·R·HORTON
America's Builder
www.drhorton.com
6123 LYONS ROAD, COCONUT CREEK, FL 33073 Tel: (954) 949-3000 Fax: (954) 928-8921

SPECIALTY ENGINEERING CONSULTANTS, Inc
1599 SW 30th AVE.
SUITE #20
BOYNTON BEACH, FL 33426

DADE - BROWARD - PALM BEACH
FL. CA. #009217

561 - 752 - 5440 OFFICE
561 - 752 - 5542 FAX

FILE NAME.
SCALE
DATE 5/28/2021
RVD. BY
DRWN. BY C.L.
REVISION

SEAL
D. ADAM LeBLANC, PE FL #77012

SHEET #
AL-1

I:\DR HORTON\BELMONT\MASTER PLANS\PLAN-AL MASTER.rvt

ELECTRICAL LEGEND

- SURFACE MOUNTED LIGHT
- WALL MOUNTED LIGHT
- RECESSED HIGH HAT
- RECESSED VAPOR PROOF LIGHT
- SURFACE MOUNTED FLUORESCENT FIXTURE
- RECESSECED FLUORESCENT FIXTURE
- HEAT LAMP/ EXHAUST FAN COMBINATION
- FLOOD LIGHT
- JUNCTION BOX
- EXHAUST FAN
- TRACK LIGHTING FIXTURE
- SWITCH
- 3 WAY SWITCH
- 4 WAY SWITCH
- DIMMER SWITCH
- PUSH BUTTON-GARAGE DR OPENER
- PUSH BUTTON-GARAGE DR OPENER
- TIME SWITCH
- WEATHER PROOF SWITCH
- DEDICATED RECEPTACLE
- DUPLEX RECEPTACLE 110/120
- QUADRUPLEX RECEPTACLE
- FLOOR RECEPTACLE
- BREAKER PANEL
- ELECTRIC METER
- MAIN DISCONNECT PANEL
- DEDICATED DISCONNECT PANEL
- ROUTED WIRE
- TELEPHONE JACK
- TELEVISION JACK
- INTERCOM
- SECURITY SYSTEM
- CHIMES
- THERMOSTAT
- TIMER RELAY
- SMOKE DETECTOR
- GARAGE DOOR OPENER
- PADDLE FAN
- SWITCH ACTIVATED RECEPTACLE
- WEATHER PROOF RECEPTACLE
- GROUND FAULT INTERRUPTER RECEPTACLE

GENERAL NOTES PER CODE IN EFFECT: FBC 2020, 7TH EDITION,NEC 2017

1. ALL RECEPTACLES TO BE TAMPER RESISTANT THROUGHOUT THE HOUSE (NEC 406.11)
2. ALL 15 AND 20-AMP LIGHTING AND RECEPTACLE CIRCUITS (EXCEPT WHERE GFIC IS REQUIRED) MUST BE ARC-FUALT, INCLUDING DINING RECEPTACLES (NEC 210.12)
3. ALL EXTERIOR RECEPTACLES WILL NEED TO BE WEATHER RESISTANT (NEC 406.8)
4. POOL PUMP/SPA MOTORS WILL REQUIRE GFCI PROTECTION (NEC 680.22 B)
5. GFI PROTECTION WILL BE REQUIRED FOR ALL GARAGE DOOR OPENERS (NEC 210.8)
6. GROUND BAR TO BE ADDED AT SERVICE ENTRANCE TO INTER SYSTEMS (NEC 250.94).

ELECTRICAL PANEL 'A'

NO	POLE TRIP	KVA	DESCRIPTION	WIRE	NO	POLE TRIP	KVA	DESCRIPTION	WIRE
1	2/60	5.0	AIR HANDLER	# 6	2	2/25	4.5	HOTWATER HEATER	#10
3					4				
5	2/50		A/C COMP.	# 6	6	2/50	12.0	RANGE/OVEN	#6
7					8				
9	1/20	1.0	DISH WASHER GFI	#12	10	2/30	5.0	DRYER	#10
11	1/20	1.0	REFRIGERATOR GFI	#12	12				
13	1/20	1.5	MICROWAVE/HOOD FAN	#12	14	1/20	1.5	SMOKE/CABON DETECTOR GFI (AF)	#12
15	1/20	1.5	WASHER GFI	#12	16	1/20	1.5	GARAGE DOOR OPENER GFI (AF)	#12
17	1/20		GENERAL LIGHTING GARAGE (AF)	#12	18	1/20	1.5	DINING ROOM REC (AF)	#12
19	1/20	1.5	SMALL APPLIANCES (AF)	#12	20	1/20	1.5	SMALL APPLIANCES (AF)	#12
21	1/15		GENERAL LIGHTING MASTER (AF)	#14	22	1/20		GENERAL LIGHTING LAUNDRY(AF)	#12
23	1/15		GENERAL LIGHTING MBATH (AF)	#14	24	1/15		GENERAL LIGHTING LIVING/DINING (AF)	#14
25	1/15		GENERAL LIGHTING BR2/BATH 2 (AF)	#14	26	1/15		GENERAL LIGHTING KITCHEN/FOYER/P.R.(AF)	#14
27	1/15		GENERAL LIGHTING HALLWAY (AF)	#14	28	1/15		EXTERIOR LIGHTING (AF)	#14
29	1/20	1.5	DISPOSAL GFI	#12	30	1/20		BATHROOM REC. (GFI)	#12
31	1/15		GENERAL LIGHTING BR3 (AF)	#14	32				
33					34				
35					36				
37					38				
39			SPARE		40			SPARE	
41			SPARE		42			SPARE	

1826	sq. ft. @ 3 watts sq. ft	5478	watts
3	Small Appliance Circuits @ 1500 watts ea. **(Minimum is 2)**	4500	watts
1	Laundry Circuit(s) @ 1500 watts ea. **(Minimum is 1)**	1500	watts
12000	Range **(Nameplate Rating)**	12000	watts
4500	Electric Water Heater	4500	watts
5000	Electric Clothes Dryer **(Enter larger: 5000 Watts or Nameplate Rating)**	5000	watts
1000	Dishwasher	1000	watts
1500	Disposal	1500	watts
1000	Refrigerator	1000	watts
1500	Microwave Oven	1500	watts
1500	Garage Door Opener	1500	watts
		0	watts
		0	watts
		0	watts
		0	watts
		0	watts
	Total Calculated Load (less HVAC)	**39478**	**watts**

Service Demand

General Load:

First 10kw of Total Calculated Load (less HVAC) @ 100%	10000	watts
Remainder of Total Calculated Load (less HVAC) @ 40%	11791.2	watts
Total General Load	**21791.2**	**watts**

HVAC Load:

10000	Air Conditioning Load @ 100% (Volts X Amps = Watts)	8000	watts
	Furnace/Air Handler Load (Volts X Amps = Watts)	0	watts
	Total HVAC Load	**8000**	**watts**

Total General Load		+	Total HVAC Load		=	Calculated Service Load
21791.2	watts	+	8000	watts	=	29791.2 watts

Calcuated Service Load		,	Service Voltage		=	Minimum Service Ampacity
29791.2	watts	,	240	volts	=	124.13 amps

I:\DR HORTON\BELMONT\MASTER PLANS\PLAN-CR MASTER.rvt

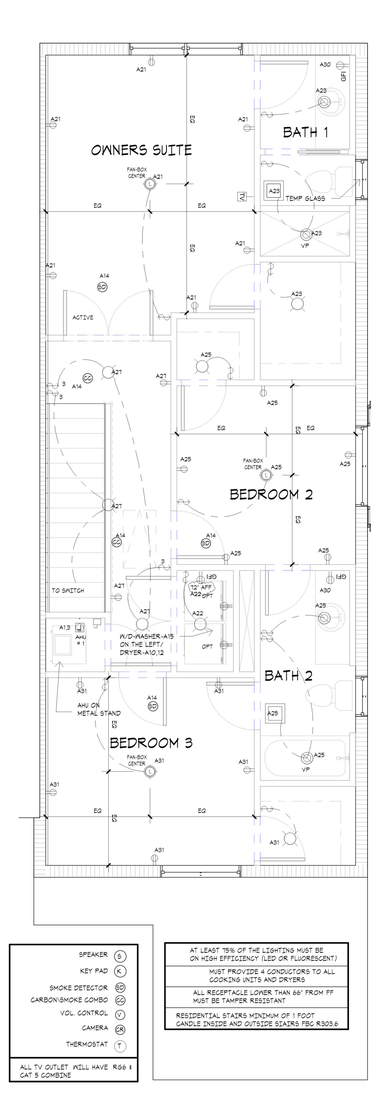

4 2ND FLR ELECTRIC
1/4" = 1'-0"

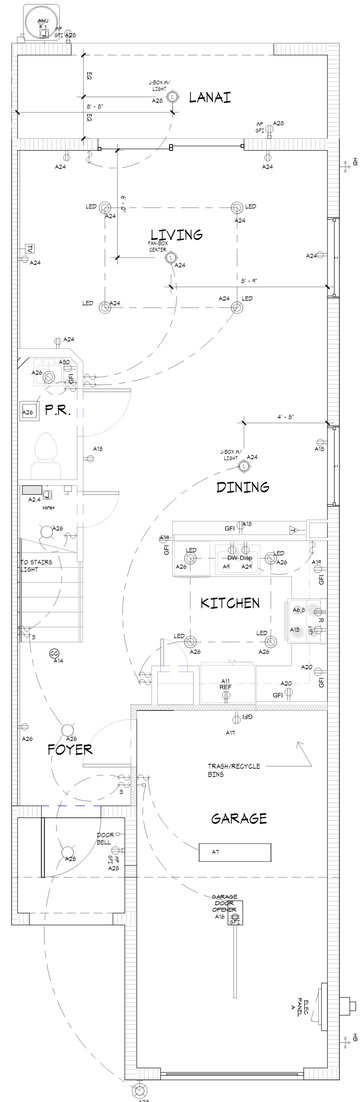

3 1ST FLR ELECTRIC
1/4" = 1'-0"

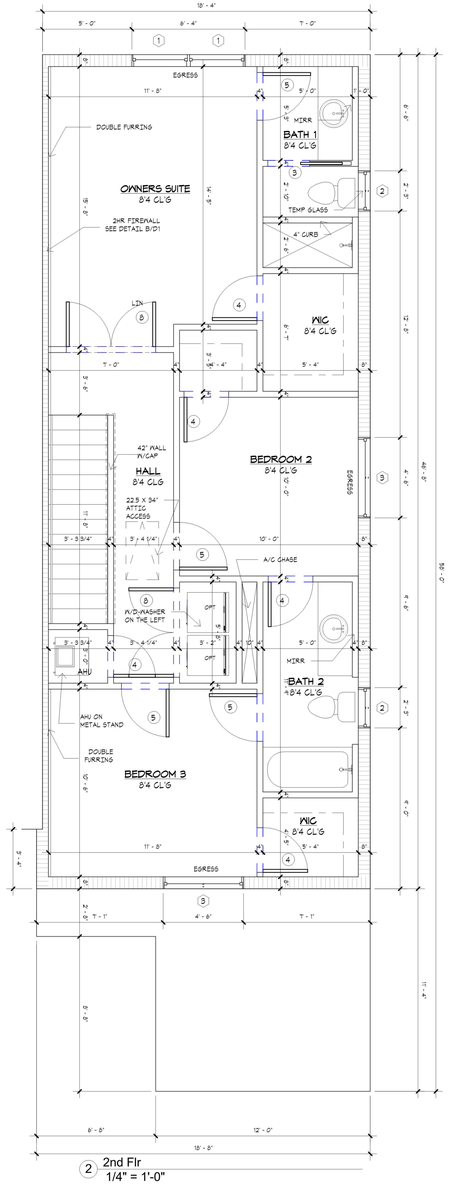

2 2nd Flr
1/4" = 1'-0"

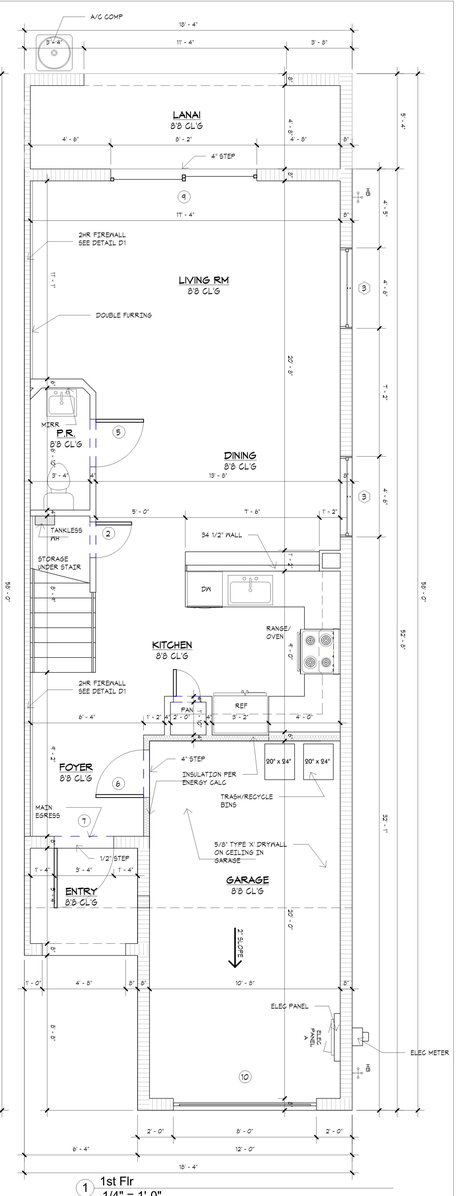

1 1st Flr
1/4" = 1'-0"

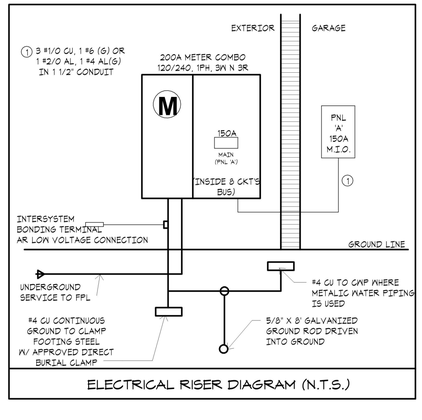

ELECTRICAL RISER DIAGRAM (N.T.S.)

GENERAL NOTES

1. ALL WINDOWS AND SLIDING DOOR GLASS SHALL BE : U-FACTOR = 0.54 AND SHGC = 0.25
2. OMITTED
3. DRYER MUST VENT TO OUTSIDE.
4. SET HOTWATER HEATER AT FIN. FLR. LEVEL
5. ALL MECHANICAL FANS MUST BE VENTED TO OUTSIDE.
6. ALL BATH ROOM FLOOR AND BASE SHALL BE IMPERVIOUS MATERIAL WHERE REQUIRED BY LOCAL BUILDING CODE.
7. HVAC CONTRACTOR TO PROVIDE ELECTRICAL BREAKERS IN AIR HANDLER.
8. ALL BATHROOM FIXTURE OUTLETS TO BE 86" AFF OR AS PER BUILDER SPECIFICATIONS.
9. PROVIDE RECEPTACAL FOR MICRO/HOOD FAN 65" A.F.F. CENTER RANGE SPACE.
10. SMOKE DETECTORS SHALL BE HARD WIRE 110V W/ BATTERY BACK UP. MULTIPLE DETECTORS SHALL BE INTERCONNECTED.
11. EGRESS WINDOWS SHALL HAVE A CLEAR OPENING OF NOT LESS THAN 20 INCHES IN WIDTH, 24 INCHES IN HEIGHT, AND 5.7 SQ.FT. IN AREA. THE BOTTOM OF THE OPENING SHALL BE NOT MORE THAN 44" OFF THE FLOOR.

NOTE:
CONTRACTORS MUST VERIFY OPENINGS WITH DOORS AND WINDOWS MANUFACTURES.

AREA CALCULATION

Comments	Area
1ST FLOOR LIVING AREA	629 SF
2ND FLOOR LIVING AREA	817 SF
	1446 SF
GARAGE	244 SF
LANAI	98 SF
ENTRY	38 SF
	380 SF
Grand total	1826 SF

WINDOWS SCHEDULE

Mark	Rough Opening Width	Rough Opening Height	Description	Count
1	3' - 2"	4' - 11"	245 SH Egress	2
2	2' - 3"	3' - 3"	1/2 335H	2
3	4' - 6"	4' - 11"	2455H	4
Grand total: 8				8

DOOR SCHEDULE1

Mark	Description	Rough Width	Rough Height	Finish Comment
1	1668 INTERIOR DOOR	1' - 6"	6' - 8"	
2	2068 INTERIOR DOOR	2' - 0"	6' - 8"	
3	2668 POCKET DOOR	2' - 6"	6' - 8"	
4	2868 INTERIOR DOOR	2' - 6"	6' - 8"	
5	2868 INTERIOR DOOR	2' - 8"	6' - 8"	
6	2868 SC DOOR TO GARAGE	2' - 8"	6' - 8"	20 MIN RATING/AUTO CLOSURE
7	3080 SC/MTL FRONT DOOR	3' - 4"	8' - 2"	
8	2-2668 INTERIOR DOOR	5' - 0"	6' - 8"	
9	8080 XX SGD	8' - 2"	6' - 8"	
10	8'0 x 8'0 Garage Door	8' - 0"	8' - 0"	
Grand total				

FLOOR/ELECT PLANS

SHEET INFORMATION
PLAN C
RIGHT

PROJECT INFORMATION
DEERFIELD-27
DEERFIELD BEACH, FLORIDA

D·R·HORTON
America's Builder
www.drhorton.com
6123 LYONS ROAD, COCONUT CREEK, FL 33073 Tel: (954) 949-3000 Fax: (954) 928-8921

SPECIALTY ENGINEERING CONSULTANTS, Inc
1599 SW 30th AVE.
SUITE #20
BOYNTON BEACH, FL 33426
DADE - BROWARD - PALM BEACH
FL. CA. #0009217
561 - 752 - 5440 OFFICE
561 - 752 - 5542 FAX

FILE NAME.
SCALE
DATE 5/28/2021
RVD. BY
DRWN. BY C.L.
REVISION

SEAL
D. ADAM LeBLANC, PE FL #77012

SHEET #
CR-1

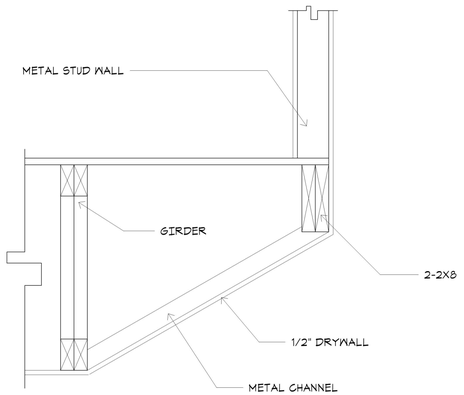

8 D1 STAIRS OPENING FRAMING DETAIL

7 D1

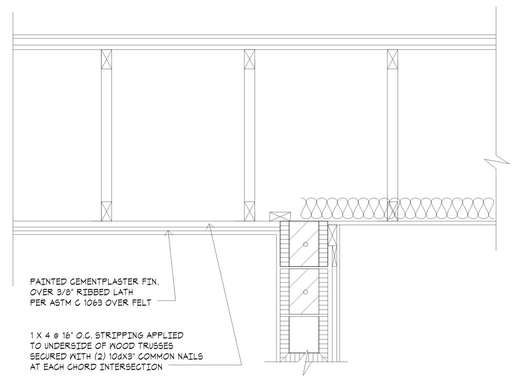

2 D1 LANAI AND ENTRY CEILING CLADDING

MASONRY CONSTRUCTION SEAL ALL OPENINGS WITH FLUID-APPLIED TO MEET AAMA 714 SPECIFICATION : INSTALL PER FMA/AAMA-200

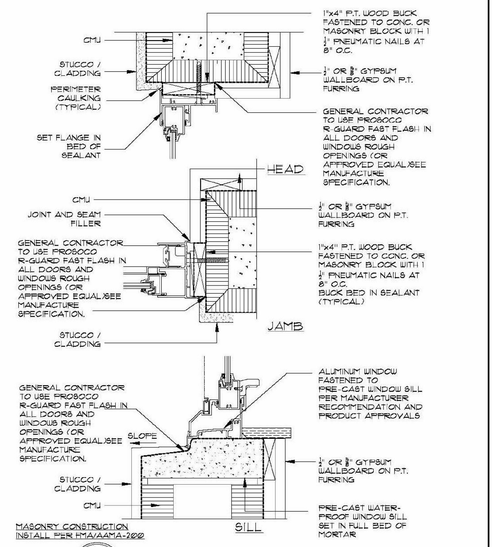

3 D1 BUCK DETAILS @ WINDOW SCALE N.T.S.

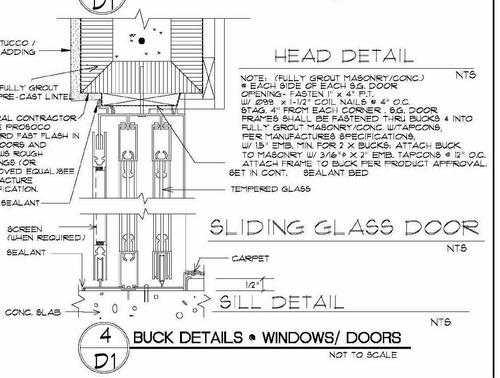

HEAD DETAIL NTS

NOTE: (FULLY GROUT MASONRY/CONC.) @ EACH SIDE OF EACH S.G. DOOR OPENING- FASTEN 1" x 4" P.T. W/ 8D@ x 1-1/2" COIL NAILS @ 4" O.C. STAG. 4" FROM EACH CORNER . S.G. DOOR FRAMES SHALL BE FASTENED THRU BUCKS & INTO FULLY GROUT MASONRY/CONC. W/TAPCONS, PER MANUFACTURES SPECIFICATIONS, W/ 1.5" EMB. MIN. FOR 2 X BUCKS. ATTACH BUCK TO MASONRY W/ 3/16"ø X 3" EMB. TAPCONS @ 12" O.C. ATTACH FRAME TO BUCK PER PRODUCT APPROVAL.

SLIDING GLASS DOOR NTS

SILL DETAIL NTS

4 D1 BUCK DETAILS @ WINDOWS/ DOORS NOT TO SCALE

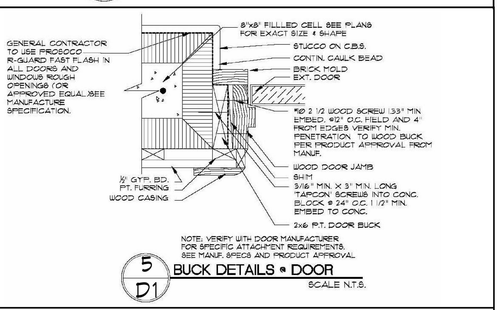

NOTE: VERIFY WITH DOOR MANUFACTURER FOR SPECIFIC ATTACHMENT REQUIREMENTS. SEE MANUF. SPECS AND PRODUCT APPROVAL

5 D1 BUCK DETAILS @ DOOR SCALE N.T.S.

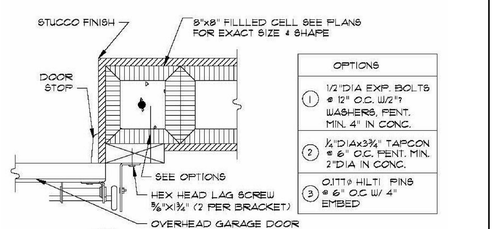

6 D1 GARAGE DOOR BUCK DTL. SCALE N.T.S.

GUARDRAIL NOTES:

1. ALL OPEN GUARDRAILS SHALL HAVE VERT. PICKETS OR ORNAMENTAL FILLER BELOW TOP RAIL WHICH WILL REJECT PASSAGE OF 4" %6124 SPHERE.
2. BOTTOM RAIL CLEARANCE BETWEEN ADJACENT SURFACE NOT TO EXCEED 2" @ STAIR NOSING.
3. ALL HANDRAILING TO TERMINATE ON A POST OR RETURN INTO THE WALL. SEE PLAN FOR DESIGN / LAYOUT.

RAILING NOTES:

1. ALL RAILINGS TO MEET 200# IMPACT LOAD H/ 50# / L.F. TOP RAIL AND 25# / L.F. AT PICKETS OR ORNAMENTAL FILLER.
2. SHOP DRAWINGS TO BE SUBMITTED TO ARCHITECT FOR REVIEW AND TO APPROPRIATE BLDG. DEPT. FOR APPROVAL.

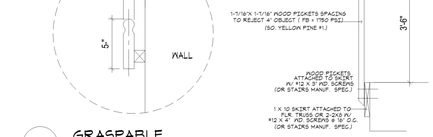

A GRASPABLE HANDRAIL DETAIL

GUARDRAIL DETAIL

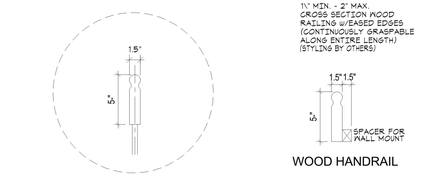

1½" MIN. - 2" MAX. CROSS SECTION WOOD RAILING W/EASED EDGES (CONTINUOUSLY GRASPABLE ALONG ENTIRE LENGTH) (STYLING BY OTHERS)

WOOD HANDRAIL

B GRASPABLE HANDRAIL DETAIL

WOOD HANDRAIL & GUARDRAIL TO BE DESIGNED IN ACCORDANCE TO SECTION 1608.2.2

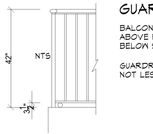

GUARDRAILS @ LANDINGS/BALCONIES:

BALCONIES OR PORCHES WHICH ARE MORE THAN 30" ABOVE FINISHED GROUND LEVEL OR FLOOR LEVEL BELOW SHALL BE PROTECTED BY A GUARDRAIL.

GUARDRAILS SHALL FORM A VERTICAL PROTECTION BARRIER NOT LESS THAN 42 INCHES HIGH.

TYP. RAILING DETAIL @ LANDINGS/BALCONIES

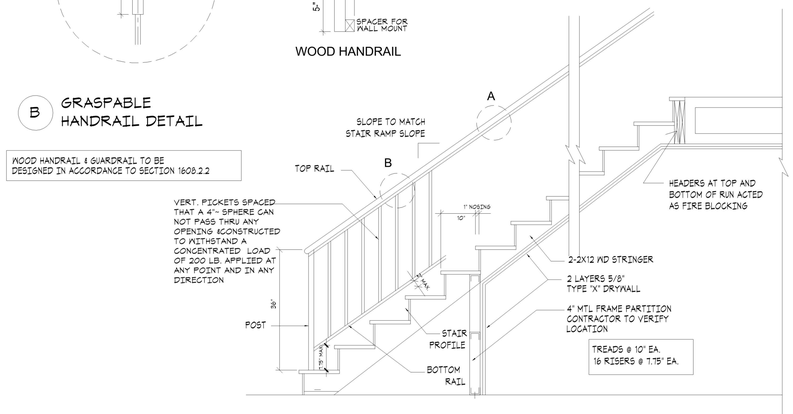

STAIR SECTION & HANDRAIL DETAIL

9 D1 STAIRS DETAIL

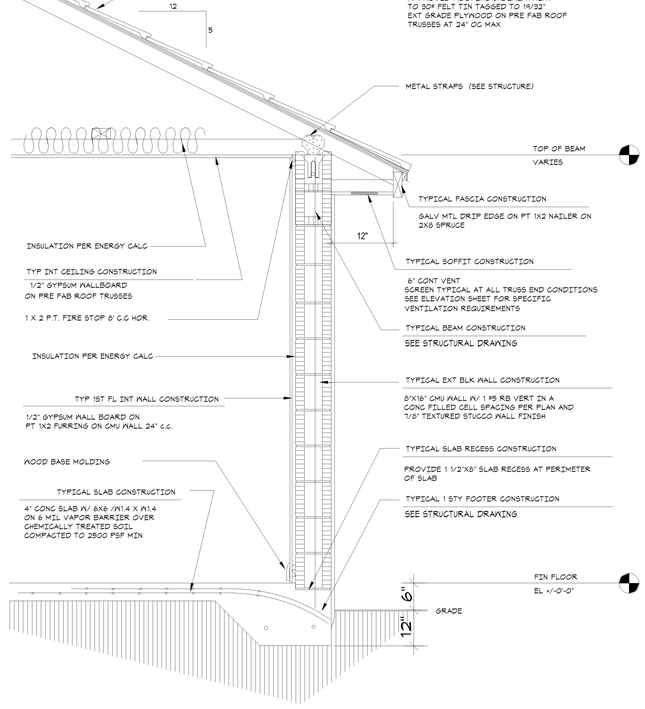

1 D1 1 STORY TYPICAL WALL SECTION

I:\DR HORTON\BELMONT\BUILDING 4-FLEX-D1.rvt

TYPICAL DETAILS

SHEET INFORMATION

PROJECT INFORMATION
BELMONT
PALM SPRINGS, FLORIDA

D.R. HORTON® DHI Listed NYSE
America's Builder
www.drhorton.com
6123 LYONS ROAD, COCONUT CREEK, FL 33073 Tel: (954) 949-3000 Fax: (954) 928-8921

SPECIALTY ENGINEERING CONSULTANTS, Inc
1599 SW 30th AVE.
SUITE #20
BOYNTON BEACH, FL 33426

DADE - BROWARD - PALM BEACH
FL. CA. #009217

561 - 752 - 5440 OFFICE
561 - 752 - 5542 FAX

FILE NAME.	
SCALE	
DATE	5/28/2021
RVD. BY	Checker
DRWN. BY	Author

REVISION SCHEDULE		
NO	DATE	Description

SEAL
D. ADAM LeBLANC, PE FL #77012

SHEET #
D1

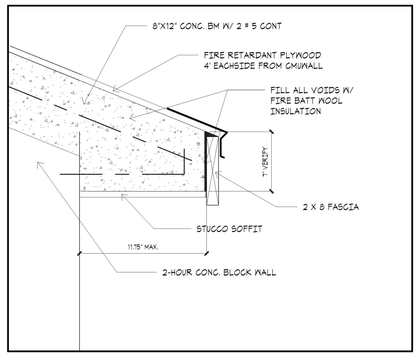

2 D2 FIRE RATED O.H. AT FIREWALL

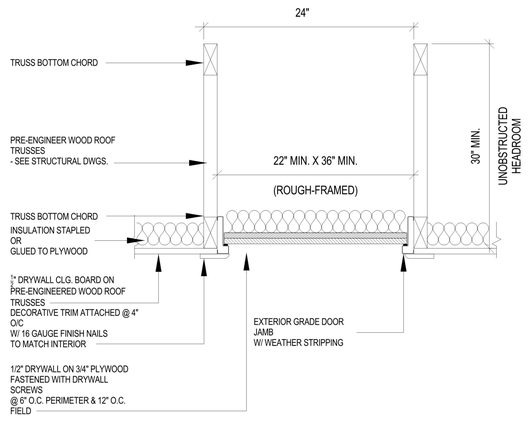

3 D2 ATTIC ACCESS DETAIL

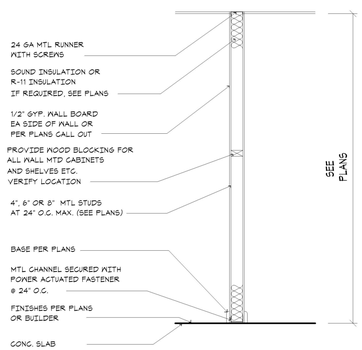

4 D2 INTERIOR NON-BEARING WALL DETAIL

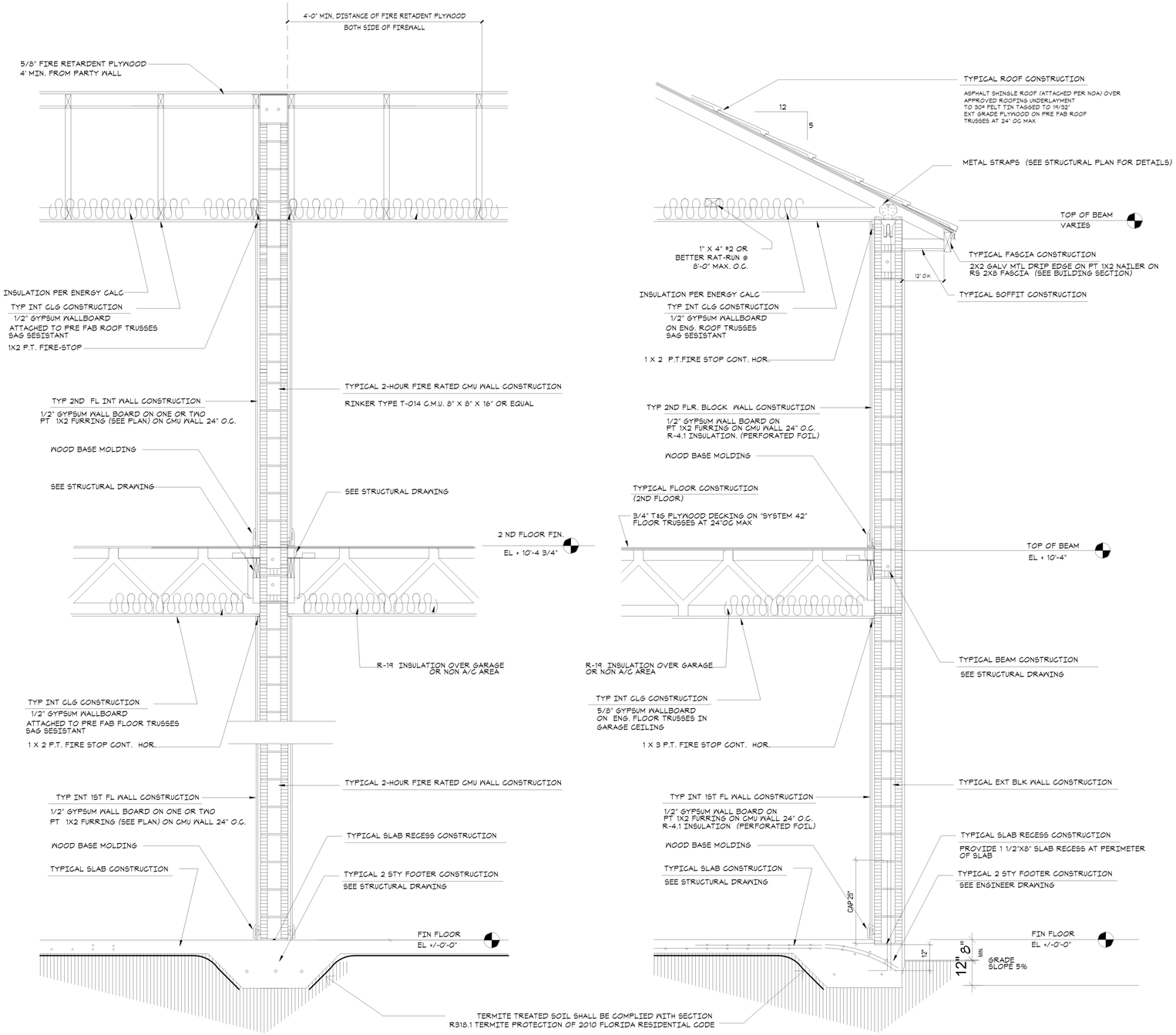

1 D2 2 STORY TYPICAL WALL SECTION & FIREWALL DETAILS

I:\DR HORTON\BELMONT\BUILDING 4-PLEX-D1.rvt

TYP WALL SECTIONS

SHEET INFORMATION

PROJECT INFORMATION

BELMONT

PALM SPRINGS, FLORIDA

D·R·HORTON
DHI Limited NYSE
America's Builder
www.drhorton.com
6123 LYONS ROAD, COCONUT CREEK, FL 33073 Tel: (954) 949-3000 Fax: (954) 928-8921

SPECIALTY ENGINEERING CONSULTANTS, Inc
1599 SW 30th AVE.
SUITE #20
BOYNTON BEACH, FL 33426

DADE - BROWARD - PALM BEACH
FL. CA. #009217

561 - 752 - 5440 OFFICE
561 - 752 - 5542 FAX

FILE NAME.	
SCALE	
DATE	5/28/2021
RVD. BY	Checker
DRWN. BY	Author

REVISION SCHEDULE		
NO	DATE	Description

SEAL
D. ADAM LeBLANC, PE FL #77012

SHEET #

D2

D·R·HORTON® DHI Listed NYSE
America's Builder
www.drhorton.com
6123 LYONS ROAD, COCONUT CREEK, FL 33073 Tel: (954) 949-3000 Fax : (954) 928-8921

BELMONT

PALM SPRINGS, FLORIDA

6-UNIT BUILDING TYPE B

6-UNIT BUILDING TYPE B

SHEET INDEX

	COVER SHEET	S-1	FOUNDATION PLAN
A-1	BUILDING PLANS	S-2	1ST LIFT BEAM PLAN
A-2	BUILDING ELEVATIONS	S-2.1	2ND FLOOR PLAN
CL-1	UNIT CL FLOOR PLANS/ELECTRICAL PLANS	S-3	TYPICAL STRUCTURAL DETAILS
AR-1	UNIT AR FLOOR PLANS/ELECTRICAL PLANS	S-4	2ND LIFT BEAM PLAN
AL-1	UNIT AL FLOOR PLANS/ELECTRICAL PLANS	S-5	TYPICAL STRUCTURAL DETAILS
CR-1	UNIT CR FLOOR PLANS/ELECTRICAL PLANS	S-6	ROOF FRAMING PLAN
D-1	TYPICAL DETAILS	S-7	TYPICAL STRUCTURAL DETAILS
D-2	TYPICAL DETAILS	M-1L	PLAN C MECHANICAL PLAN LEFT
P-1	PLUMBING PLAN	M-1R	PLAN C MECHANICAL PLAN RIGHT
P-2	PLUMBING PLAN	M-2L	PLAN A MECHANICAL PLAN LEFT
		M-2R	PLAN A MECHANICAL PLAN RIGHT

SITE & AREA CALCULATIONS

TOTAL BUILDING AREA	11,264 SQ.FT.
PROPOSED A/C AREA	9,020 SQ.FT.
PROPOSED NON A/C AREA	2,244 SQ.FT.
GARAGES	1,436 SQ.FT.
COVERED LANAI	580 SQ.FT.
ENTRY	226 SQ.FT.

BLDG. DESIGN DATA

CODES: FLORIDA RESIDENTIAL BLDG. CODE 2020 EDITION
NFPA FL. FIRE PREVENTION CODE 7TH ED.
NEC NATIONAL ELECTRIC CODE 2017
CARBON MONOXIDE DETECTORS REQUIREMENTS PER FL ADMINISTRATIVE CODE RULE 9B-3.0472
ACI 318-14.
ASTM 47th. ED.

DESIGN CRITERIA	
COUNTY	PLAM SPRINGS, FL
OCCUPANCY GROUP	R-3
NUMBER OF STORIES	2
BUILDING CATEGORY	ENCLOSED
BASIC WIND SPEED, mph	170
WIND IMPORTANCE FACTOR	1.0
WIND EXPOSURE CATEGORY	C
INTERNAL PRESSURE COEFFICIENT	+/- .18
MINIMUM SOIL PRESSURE, psf	2500
FLOOR LOADS (LIVE & DEAD)	55
ROOF DEAD LOAD, psf	20
ROOF LIVE LOAD, psf	30
CONTRUCTION TYPE	"III B"UNPROTECTED

D·R·HORTON® DHI Listed NYSE
America's Builder
www.drhorton.com
©COPYRIGHT 2004
6123 LYONS ROAD, COCONUT CREEK, FL 33073 Tel: (954) 949-3079 Fax: (954) 928-8921

SPECIALTY ENGINEERING CONSULTANTS, Inc.
SPECIALTY ENGINEERING CONSULTANTS, Inc
1599 SW 30th AVE.
SUITE #20
BOYNTON BEACH, FL 33426
DADE - BROWARD - PALM BEACH
FL. CA. #0009217
561 - 752 - 5440 OFFICE
561 - 752 - 5542 FAX

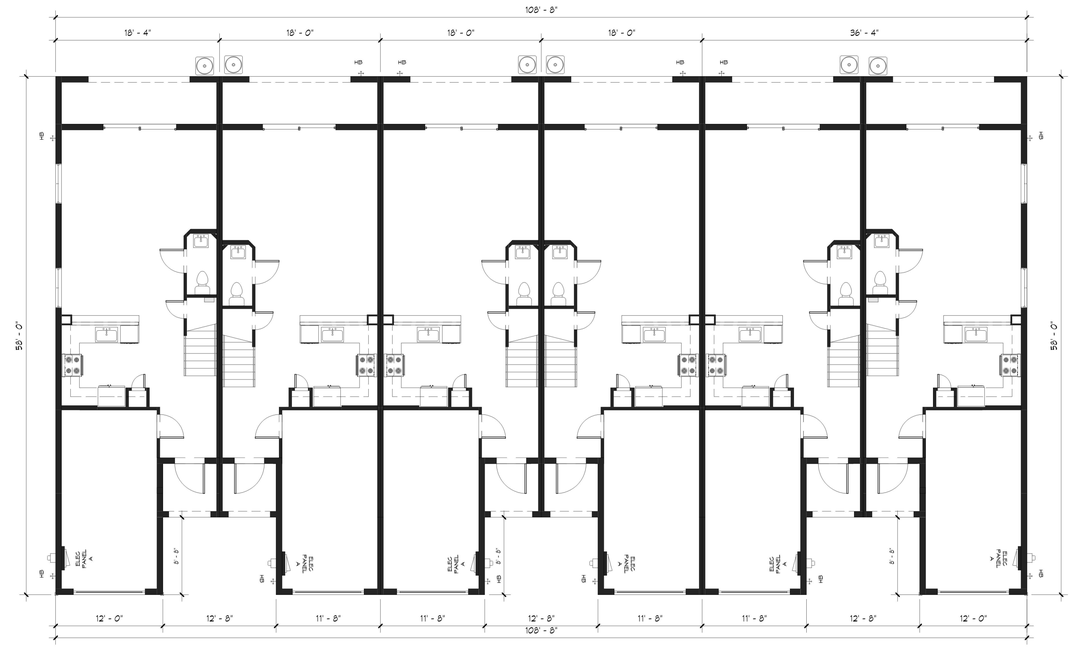

1 1st Flr
1/8" = 1'-0"

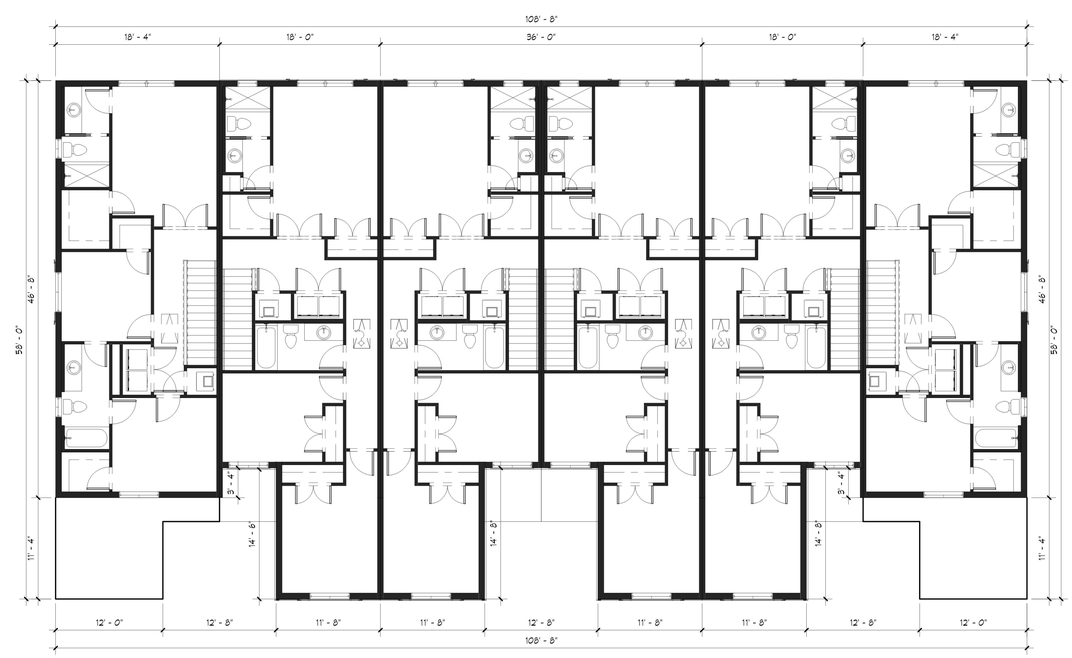

2 2nd Flr
1/8" = 1'-0"

I:\DR HORTON\BELMONT\BUILDING 6-PLEX-B.rvt

BUILDING PLANS

SHEET INFORMATION
6- UNIT BUILDING TYPE B

PROJECT INFORMATION
BELMONT
PALM SPRINGS, FLORIDA

D·R·HORTON® America's Builder
DHI NYSE
www.drhorton.com
6123 LYONS ROAD, COCONUT CREEK, FL 33073 Tel: (954) 949-3000 Fax: (954) 928-8921

SPECIALTY ENGINEERING CONSULTANTS, Inc
1599 SW 30th AVE.
SUITE #20
BOYNTON BEACH, FL 33426

DADE - BROWARD - PALM BEACH
FL. CA. #009217

561 - 752 - 5440 OFFICE
561 - 752 - 5542 FAX

FILE NAME.	
SCALE	
DATE	5/28//2021
RV'D. BY	Checker
DRWN. BY	Author

REVISION SCHEDULE

NO	DATE	Description

SEAL
D. ADAM LeBLANC, PE FL #77012

SHEET #
A-1

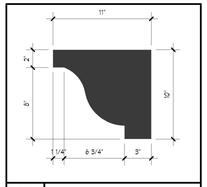

1 BRACKET 1 : 8" W

UPPER ROOF VENT CALCULATION-PLAN A	
ATTIC AREA MAX.	1,000 S.F.
CALCULATE NET FREE VENT AREA: 1,000 S.F./150 = 6.67 S.F. (1 IN 150 RULED)	
CONVERT TO SQ. INCHES : 6.67 SF X 144 = 960 SQ.IN	
SOFFIT VENT 960 SQ.IN. : 6" CONT SCREEN VENT 6" CONT. VENT : 960 SQ.IN./LF = 960/36 = 27	

LOWER ROOF VENT CALCULATION-PLAN A	
ATTIC AREA MAX.	40 S.F.
CALCULATE NET FREE VENT AREA: 40 S.F./150 = .27 S.F. (1 IN 150 RULED)	
CONVERT TO SQ. INCHES : .27 SF X 144 = 38.4 SQ.IN	
SOFFIT VENT 38.4 SQ.IN. : 6" CONT SCREEN VENT 6" CONT. VENT : 38.4 SQ.IN./LF = 38.4/36 = 2	

UPPER ROOF VENT CALCULATION-PLAN C	
ATTIC AREA MAX.	900 S.F.
CALCULATE NET FREE VENT AREA: 900 S.F./150 = 6.0 S.F. (1 IN 150 RULED)	
CONVERT TO SQ. INCHES : 6 SF X 144 = 864 SQ.IN	
SOFFIT VENT 864 SQ.IN. : 6" CONT SCREEN VENT 6" CONT. VENT : 864 SQ.IN./LF = 864/36 = 24	

LOWER ROOF VENT CALCULATION-PLAN C	
ATTIC AREA MAX.	100 S.F.
CALCULATE NET FREE VENT AREA: 100 S.F./150 = 1.07 S.F. (1 IN 150 RULED)	
CONVERT TO SQ. INCHES : 1.07 SF X 144 = 153.6 SQ.IN	
SOFFIT VENT 153.6 SQ.IN. : 6" CONT SCREEN VENT 6" CONT. VENT : 153.6 SQ.IN./LF = 153.6/36 = 5	



2 REAR ELEVATION
1/8" = 1'-0"



4 RIGHT SIDE
1/8" = 1'-0"



3 LEFT SIDE
1/8" = 1'-0"



1 FRONT ELEVATION
1/8" = 1'-0"

I:\DR HORTON\BELMONT\BUILDING 6-PLEX-B.rvt

ELEVATIONS

SHEET INFORMATION
6- UNIT BUILDING TYPE B

PROJECT INFORMATION
BELMONT
PALM SPRINGS, FLORIDA

D·R·HORTON
America's Builder
www.drhorton.com
6123 LYONS ROAD, COCONUT CREEK, FL 33073 Tel: (954) 949-3000 Fax: (954) 928-8921

SPECIALTY ENGINEERING CONSULTANTS, Inc
1599 SW 30th AVE.
SUITE #20
BOYNTON BEACH, FL 33426

DADE - BROWARD - PALM BEACH
FL. CA. #009217

561 - 752 - 5440 OFFICE
561 - 752 - 5542 FAX

FILE NAME.
SCALE
DATE 5/28/2021
RVD. BY Checker
DRWN. BY Author

REVISION SCHEDULE		
NO	DATE	Description

SEAL
D. ADAM LeBLANC, PE FL #77012

SHEET #
A-2

ELECTRICAL LEGEND

- SURFACE MOUNTED LIGHT
- WALL MOUNTED LIGHT
- RECESSED HIGH HAT
- RECESSED VAPOR PROOF LIGHT
- SURFACE MOUNTED FLUORESCENT FIXTURE
- RECESSECED FLUORESCENT FIXTURE
- HEAT LAMP/ EXHAUST FAN COMBINATION
- FLOOD LIGHT
- JUNCTION BOX
- EXHAUST FAN
- TRACK LIGHTING FIXTURE
- SWITCH
- 3 WAY SWITCH
- 4 WAY SWITCH
- DIMMER SWITCH
- PUSH BUTTON-GARAGE DR OPENER
- PUSH BUTTON-GARAGE DR OPENER
- TIME SWITCH
- WEATHER PROOF SWITCH
- DEDICATED RECEPTACLE
- DUPLEX RECEPTACLE 110/120
- QUADRUPLEX RECEPTACLE
- FLOOR RECEPTACLE
- BREAKER PANEL
- ELECTRIC METER
- MAIN DISCONNECT PANEL
- DEDICATED DISCONNECT PANEL
- ROUTED WIRE
- TELEPHONE JACK
- TELEVISION JACK
- INTERCOM
- SECURITY SYSTEM
- CHIMES
- THERMOSTAT
- TIMER RELAY
- SMOKE DETECTOR
- GARAGE DOOR OPENER
- PADDLE FAN
- SWITCH ACTIVATED RECEPTACLE
- WEATHER PROOF RECEPTACLE
- GROUND FAULT INTERRUPTER RECEPTACLE

GENERAL NOTES PER CODE IN EFFECT: FBC 2020, 7TH EDITION,NEC 2017

1. ALL RECEPTACLES TO BE TAMPER RESISTANT THROUGHOUT THE HOUSE (NEC 406.11)
2. ALL 15 AND 20-AMP LIGHTING AND RECEPTACLE CIRCUITS (EXCEPT WHERE GFIC IS REQUIRED) MUST BE ARC-FUALT, INCLUDING DINING RECEPTACLES (NEC 210.12)
3. ALL EXTERIOR RECEPTACLES WILL NEED TO BE WEATHER RESISTANT (NEC 406.8)
4. POOL PUMP/SPA MOTORS WILL REQUIRE GFCI PROTECTION (NEC 680.22 B)
5. GFI PROTECTION WILL BE REQUIRED FOR ALL GARAGE DOOR OPENERS (NEC 210.8)
6. GROUND BAR TO BE ADDED AT SERVICE ENTRANCE TO INTER SYSTEMS (NEC 250.94).

ELECTRICAL PANEL 'A'

NO	POLE TRIP	KVA	DESCRIPTION	WIRE	NO	POLE TRIP	KVA	DESCRIPTION	WIRE
1	2/60	5.0	AIR HANDLER	# 6	2	2/25	4.5	HOTWATER HEATER	#10
3					4				
5	2/50		A/C COMP.	# 6	6	2/50	12.0	RANGE/OVEN	#6
7					8				
9	1/20	1.0	DISH WASHER GFI	#12	10	2/30	5.0	DRYER	#10
11	1/20	1.0	REFRIGERATOR GFI	#12	12				
13	1/20	1.5	MICROWAVE/HOOD FAN	#12	14	1/20	1.5	SMOKE/CABON DETECTOR GFI (AF)	#12
15	1/20	1.5	WASHER GFI	#12	16	1/20	1.5	GARAGE DOOR OPENER GFI (AF)	#12
17	1/20		GENERAL LIGHTING GARAGE (AF)	#12	18	1/20	1.5	DINING ROOM REC (AF)	#12
19	1/20	1.5	SMALL APPLIANCES (AF)	#12	20	1/20	1.5	SMALL APPLIANCES (AF)	#12
21	1/15		GENERAL LIGHTING MASTER (AF)	#14	22	1/20		GENERAL LIGHTING LAUNDRY(AF)	#12
23	1/15		GENERAL LIGHTING MBATH (AF)	#14	24	1/15		GENERAL LIGHTING LIVING/DINING (AF)	#14
25	1/15		GENERAL LIGHTING BR2/BATH 2 (AF)	#14	26	1/15		GENERAL LIGHTING KITCHEN/FOYER/P.R.(AF)	#14
27	1/15		GENERAL LIGHTING HALLWAY (AF)	#14	28	1/15		EXTERIOR LIGHTING (AF)	#14
29	1/20	1.5	DISPOSAL GFI	#12	30	1/20		BATHROOM REC. (GFI)	#12
31	1/15		GENERAL LIGHTING BR3 (AF)	#14	32				
33					34				
35					36				
37					38				
39			SPARE		40			SPARE	
41			SPARE		42			SPARE	

1826	sq. ft. @ 3 watts sq. ft	5478	watts
3	Small Appliance Circuits @ 1500 watts ea. **(Minimum is 2)**	4500	watts
1	Laundry Circuit(s) @ 1500 watts ea. **(Minimum is 1)**	1500	watts
12000	Range **(Nameplate Rating)**	12000	watts
4500	Electric Water Heater	4500	watts
5000	Electric Clothes Dryer **(Enter larger: 5000 Watts or Nameplate Rating)**	5000	watts
1000	Dishwasher	1000	watts
1500	Disposal	1500	watts
1000	Refrigerator	1000	watts
1500	Microwave Oven	1500	watts
1500	Garage Door Opener	1500	watts
		0	watts
		0	watts
		0	watts
		0	watts
		0	watts
	Total Calculated Load (less HVAC)	**39478**	**watts**

Service Demand

General Load:

First 10kw of Total Calculated Load (less HVAC) @ 100%	10000	watts
Remainder of Total Calculated Load (less HVAC) @ 40%	11791.2	watts
Total General Load	**21791.2**	**watts**

HVAC Load:

10000	Air Conditioning Load @ 100% (Volts X Amps = Watts)	8000	watts
	Furnace/Air Handler Load (Volts X Amps = Watts)	0	watts
	Total HVAC Load	**8000**	**watts**

Total General Load	+	Total HVAC Load	=	Calculated Service Load
21791.2 watts	+	8000 watts	=	29791.2 watts

Calcuated Service Load	,	Service Voltage	=	Minimum Service Ampacity
29791.2 watts	,	240 volts	=	124.13 amps

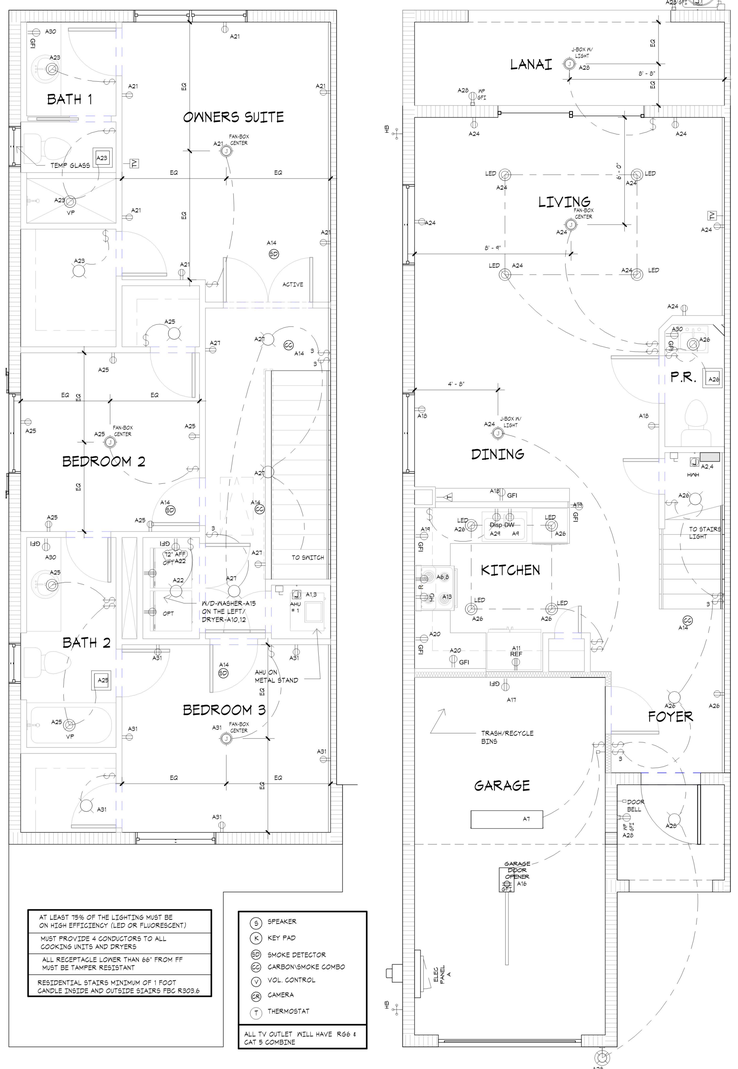

4 2ND FLR ELECTRIC
1/4" = 1'-0"

3 1ST FLR ELECTRIC
1/4" = 1'-0"

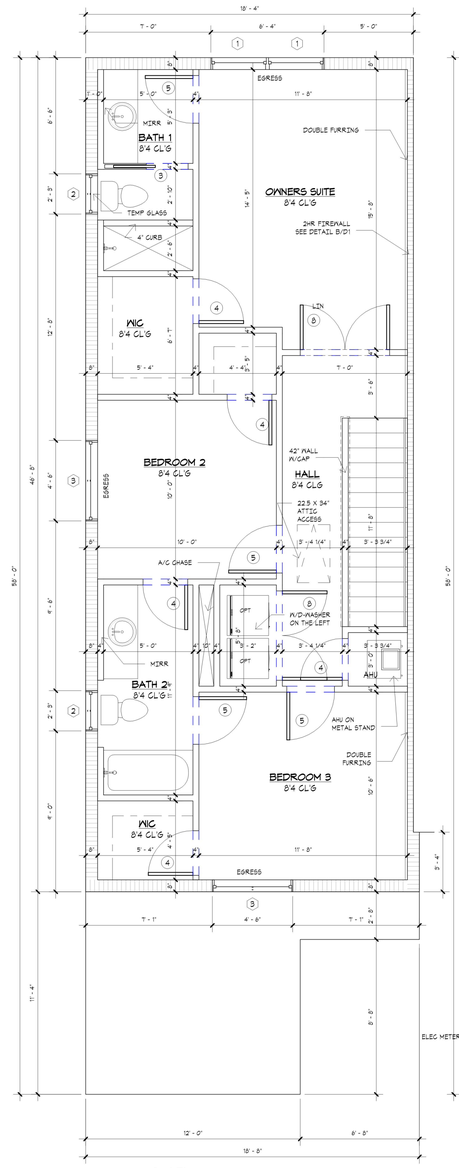

2 2nd Flr
1/4" = 1'-0"

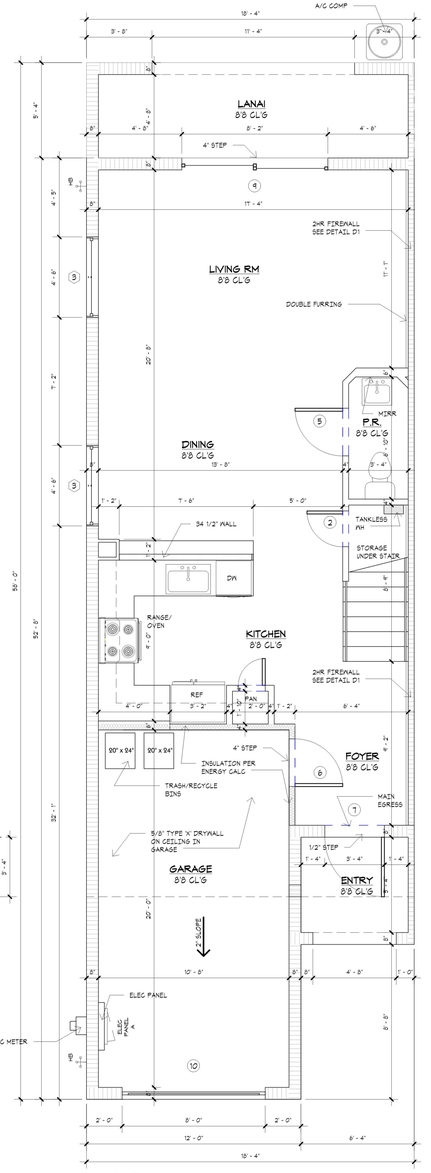

1 1st Flr
1/4" = 1'-0"

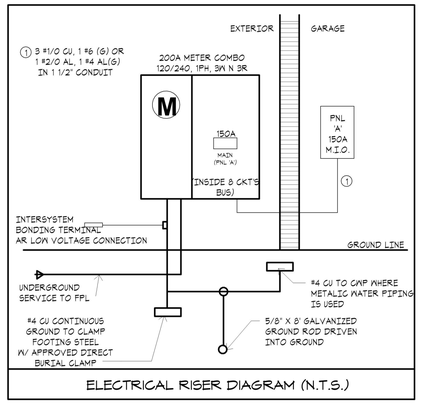

ELECTRICAL RISER DIAGRAM (N.T.S.)

GENERAL NOTES

1. ALL WINDOWS AND SLIDING DOOR GLASS SHALL BE : U-FACTOR = 0.54 AND SHGC = 0.65
2. OMITTED
3. DRYER MUST VENT TO OUTSIDE.
4. SET HOTWATER HEATER AT FIN. FLR. LEVEL
5. ALL MECHANICAL FANS MUST BE VENTED TO OUTSIDE.
6. ALL BATH ROOM FLOOR AND BASE SHALL BE IMPERVIOUS MATERIAL WHERE REQUIRED BY LOCAL BUILDING CODE.
7. HVAC CONTRACTOR TO PROVIDE ELECTRICAL BREAKERS IN AIR HANDLER.
8. ALL BATHROOM FIXTURE OUTLETS TO BE 66" AFF OR AS PER BUILDER SPECIFICATIONS.
9. PROVIDE RECEPTACAL FOR MICRO/HOOD FAN 65" A.F.F. CENTER RANGE SPACE.
10. SMOKE DETECTORS SHALL BE HARD WIRE 110V W/ BATTERY BACK UP. MULTIPLE DETECTORS SHALL BE INTERCONNECTED.
11. EGRESS WINDOWS SHALL HAVE A CLEAR OPENING OF NOT LESS THAN 20 INCHES IN WIDTH, 24 INCHES IN HEIGHT, AND 5.7 SQ.FT. IN AREA. THE BOTTOM OF THE OPENING SHALL BE NOT MORE THAN 44" OFF THE FLOOR.

NOTE:
CONTRACTORS MUST VERIFY OPENINGS WITH DOORS AND WINDOWS MANUFACTURES.

AREA CALCULATION

Comments	Area
1ST FLOOR LIVING AREA	629 SF
2ND FLOOR LIVING AREA	817 SF
	1446 SF
GARAGE	244 SF
LANAI	98 SF
ENTRY	38 SF
	380 SF
Grand total	1826 SF

WINDOWS SCHEDULE

Mark	Rough Opening Width	Rough Opening Height	Description	Count
1	3' - 2"	4' - 11"	245 SH Egress	2
2	2' - 3"	3' - 3"	1/2 335H	2
3	4' - 6"	4' - 11"	2455H	4
Grand total: 8				8

DOOR SCHEDULE1

Mark	Description	Rough Width	Rough Height	Finish Comment
1	1668 INTERIOR DOOR	1' - 6"	6' - 8"	
2	2068 INTERIOR DOOR	2' - 0"	6' - 8"	
3	2668 POCKET DOOR	2' - 6"	6' - 8"	
4	2668 INTERIOR DOOR	2' - 6"	6' - 8"	
5	2868 INTERIOR DOOR	2' - 8"	6' - 8"	
6	2868 SC DOOR TO GARAGE	2' - 8"	6' - 8"	20 MIN RATING/AUTO CLOSURE
7	3080 SC/MTL FRONT DOOR	3' - 4"	8' - 2"	
8	2-2668 INTERIOR DOOR	5' - 0"	6' - 8"	
9	8080 XX SGD	8' - 2"	6' - 8"	
10	8'0 x 8'0 Garage Door	8' - 0"	8' - 0"	
Grand total				

FLOOR/ELECT PLANS

SHEET INFORMATION
PLAN C
LEFT

PROJECT INFORMATION
BELMONT
PALM SPRINGS, FLORIDA

D·R·HORTON
America's Builder
www.drhorton.com
6123 LYONS ROAD, COCONUT CREEK, FL 33073 Tel: (954) 949-3000 Fax: (954) 928-8921

SPECIALTY ENGINEERING CONSULTANTS, Inc
1599 SW 30th AVE.
SUITE #20
BOYNTON BEACH, FL 33426

DADE - BROWARD - PALM BEACH
FL. CA. #009217

561 - 752 - 5440 OFFICE
561 - 752 - 5542 FAX

FILE NAME.
SCALE
DATE 5/28/2021
RVD. BY
DRWN. BY C.L.
REVISION

SEAL
D. ADAM LeBLANC, PE FL #77012

SHEET #
CL-1

I:\DR HORTON\BELMONT\MASTER PLANS\PLAN-CL MASTER.rvt

ELECTRICAL LEGEND

- SURFACE MOUNTED LIGHT
- WALL MOUNTED LIGHT
- RECESSED HIGH HAT
- RECESSED VAPOR PROOF LIGHT
- SURFACE MOUNTED FLUORESCENT FIXTURE
- RECESSECED FLUORESCENT FIXTURE
- HEAT LAMP/ EXHAUST FAN COMBINATION
- FLOOD LIGHT
- JUNCTION BOX
- EXHAUST FAN
- TRACK LIGHTING FIXTURE
- SWITCH
- 3 WAY SWITCH
- 4 WAY SWITCH
- DIMMER SWITCH
- PUSH BUTTON-GARAGE DR OPENER
- PUSH BUTTON-GARAGE DR OPENER
- TIME SWITCH
- WEATHER PROOF SWITCH
- DEDICATED RECEPTACLE
- DUPLEX RECEPTACLE 110/120
- QUADRUPLEX RECEPTACLE
- FLOOR RECEPTACLE
- BREAKER PANEL
- ELECTRIC METER
- MAIN DISCONNECT PANEL
- DEDICATED DISCONNECT PANEL
- ROUTED WIRE
- TELEPHONE JACK
- TELEVISION JACK
- INTERCOM
- SECURITY SYSTEM
- CHIMES
- THERMOSTAT
- TIMER RELAY
- SMOKE DETECTOR
- GARAGE DOOR OPENER
- PADDLE FAN
- SWITCH ACTIVATED RECEPTACLE
- WEATHER PROOF RECEPTACLE
- GROUND FAULT INTERRUPTER RECEPTACLE

GENERAL NOTES PER CODE IN EFFECT: FBC 2020, 7TH EDITION,NEC 2017

1. ALL RECEPTACLES TO BE TAMPER RESISTANT THROUGHOUT THE HOUSE (NEC 406.11)
2. ALL 15 AND 20-AMP LIGHTING AND RECEPTACLE CIRCUITS (EXCEPT WHERE GFIC IS REQUIRED) MUST BE ARC-FUALT, INCLUDING DINING RECEPTACLES (NEC 210.12)
3. ALL EXTERIOR RECEPTACLES WILL NEED TO BE WEATHER RESISTANT (NEC 406.8)
4. POOL PUMP/SPA MOTORS WILL REQUIRE GFCI PROTECTION (NEC 680.22 B)
5. GFI PROTECTION WILL BE REQUIRED FOR ALL GARAGE DOOR OPENERS (NEC 210.8)
6. GROUND BAR TO BE ADDED AT SERVICE ENTRANCE TO INTER SYSTEMS (NEC 250.94).

ELECTRICAL PANEL 'A'

NO	POLE TRIP	KVA	DESCRIPTION	WIRE	NO	POLE TRIP	KVA	DESCRIPTION	WIRE
1	2/60	5.0	AIR HANDLER	# 6	2	2/25	4.5	HOTWATER HEATER	#10
3					4				
5	2/50		A/C COMP.	# 6	6	2/50	12.0	RANGE/OVEN	#6
7					8				
9	1/20	1.0	DISH WASHER GFI	#12	10	2/30	5.0	DRYER	#10
11	1/20	1.0	REFRIGERATOR GFI	#12	12				
13	1/20	1.5	MICROWAVE/HOOD FAN	#12	14	1/20	1.5	SMOKE/CABON DETECTOR GFI (AF)	#12
15	1/20	1.5	WASHER GFI	#12	16	1/20	1.5	GARAGE DOOR OPENER GFI (AF)	#12
17	1/20		GENERAL LIGHTING GARAGE (AF)	#12	18	1/20	1.5	DINING ROOM REC (AF)	#12
19	1/20	1.5	SMALL APPLIANCES (AF)	#12	20	1/20	1.5	SMALL APPLIANCES (AF)	#12
21	1/15		GENERAL LIGHTING MASTER (AF)	#14	22	1/20		GENERAL LIGHTING LAUNDRY(AF)	#12
23	1/15		GENERAL LIGHTING MBATH (AF)	#14	24	1/15		GENERAL LIGHTING LIVING/DINING (AF)	#14
25	1/15		GENERAL LIGHTING BR2/BATH 2 (AF)	#14	26	1/15		GENERAL LIGHTING KITCHEN/FOYER/P.R.(AF)	#14
27	1/15		GENERAL LIGHTING HALLWAY (AF)	#14	28	1/15		EXTERIOR LIGHTING (AF)	#14
29	1/20	1.5	DISPOSAL GFI	#12	30	1/20		BATHROOM REC. (GFI)	#12
31	1/15		GENERAL LIGHTING BR3 (AF)	#14	32				
33					34				
35					36				
37					38				
39			SPARE		40			SPARE	
41			SPARE		42			SPARE	

1769	sq. ft. @ 3 watts sq. ft	5307	watts
3	Small Appliance Circuits @ 1500 watts ea. **(Minimum is 2)**	4500	watts
1	Laundry Circuit(s) @ 1500 watts ea. **(Minimum is 1)**	1500	watts
12000	Range **(Nameplate Rating)**	12000	watts
4500	Electric Water Heater	4500	watts
5000	Electric Clothes Dryer **(Enter larger: 5000 Watts or Nameplate Rating)**	5000	watts
1000	Dishwasher	1000	watts
1500	Disposal	1500	watts
1000	Refrigerator	1000	watts
1500	Microwave Oven	1500	watts
1500	Garage Door Opener	1500	watts
		0	watts
		0	watts
		0	watts
		0	watts
		0	watts
	Total Calculated Load (less HVAC)	**39307**	**watts**

Service Demand

General Load:

First 10kw of Total Calculated Load (less HVAC) @ 100%	10000	watts
Remainder of Total Calculated Load (less HVAC) @ 40%	11722.8	watts
Total General Load	**21722.8**	**watts**

HVAC Load:

10000	Air Conditioning Load @ 100% (Volts X Amps = Watts)	5000	watts
	Furnace/Air Handler Load (Volts X Amps = Watts)	0	watts
	Total HVAC Load	**5000**	**watts**

Total General Load		+	Total HVAC Load		=	Calculated Service Load	
21722.8	watts	+	5000	watts	=	26722.8	watts

Calcuated Service Load		/	Service Voltage		=	Minimum Service Ampacity	
26722.8	watts	/	240	volts	=	111.35	amps

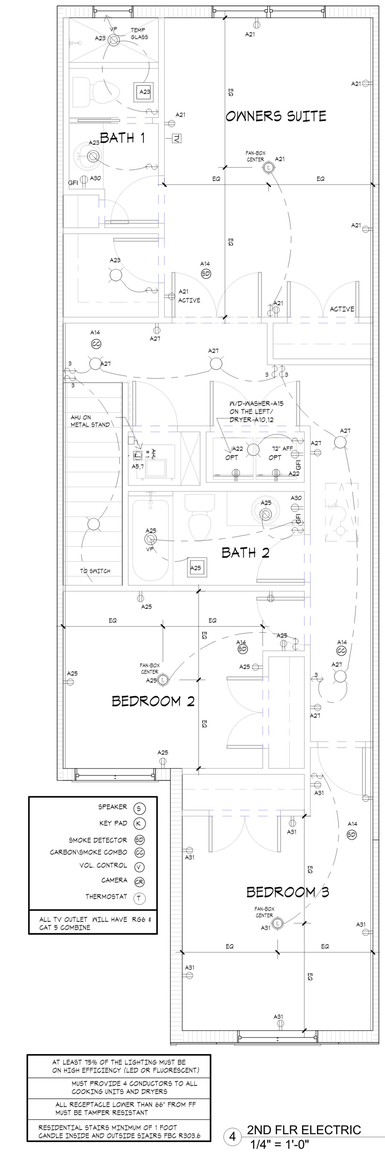

4 2ND FLR ELECTRIC
1/4" = 1'-0"

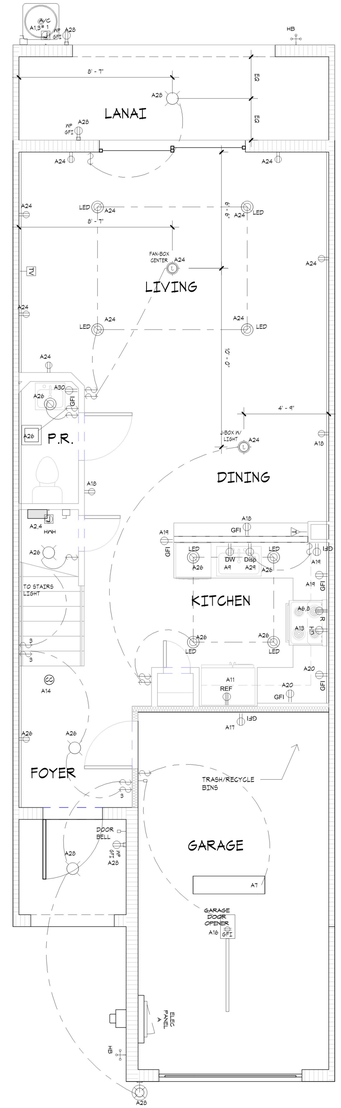

3 1ST FLR ELECTRIC
1/4" = 1'-0"

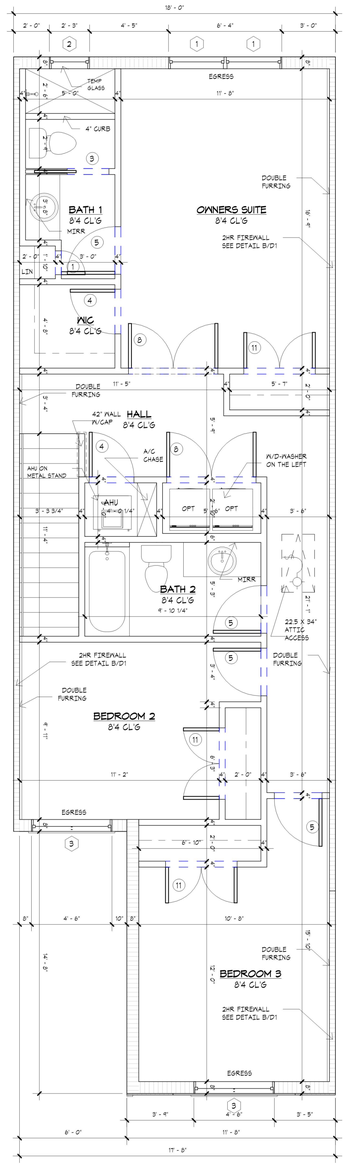

2 2nd Flr
1/4" = 1'-0"

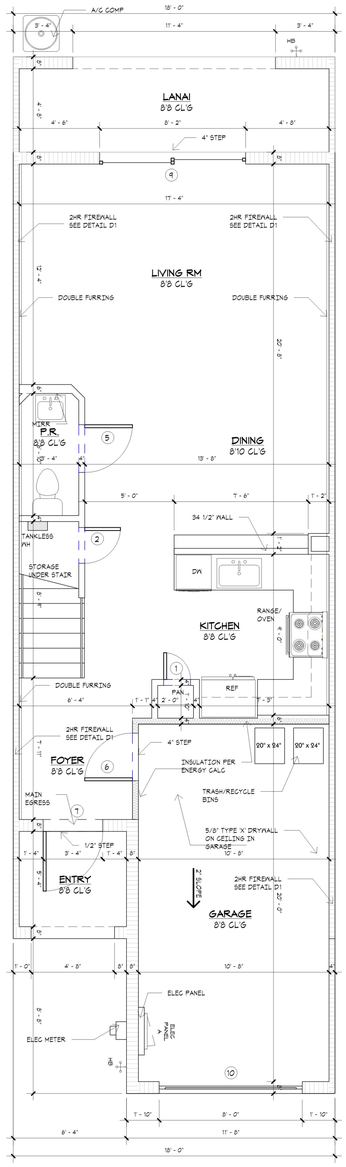

1 1st Flr
1/4" = 1'-0"

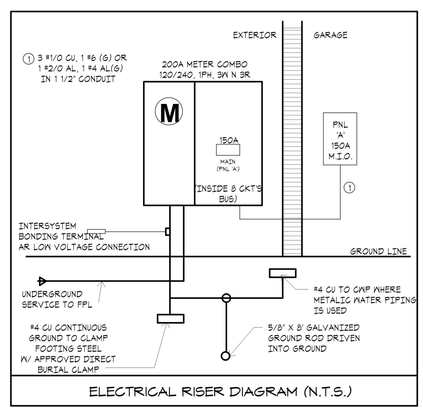

ELECTRICAL RISER DIAGRAM (N.T.S.)

GENERAL NOTES

1. ALL WINDONS AND SLIDING DOOR GLASS SHALL BE : U-FACTOR = 0.54 AND SHGC = 0.65
2. OMITTED
3. DRYER MUST VENT TO OUTSIDE.
4. SET HOTWATER HEATER AT FIN. FLR. LEVEL
5. ALL MECHANICAL FANS MUST BE VENTED TO OUTSIDE.
6. ALL BATH ROOM FLOOR AND BASE SHALL BE IMPERVIOUS MATERIAL WHERE REQUIRED BY LOCAL BUILDING CODE.
7. HVAC CONTRACTOR TO PROVIDE ELECTRICAL BREAKERS IN AIR HANDLER.
8. ALL BATHROOM FIXTURE OUTLETS TO BE 66" AFF OR AS PER BUILDER SPECIFICATIONS.
9. PROVIDE RECEPTACAL FOR MICRO/HOOD FAN 65" A.F.F. CENTER RANGE SPACE.
10. SMOKE DETECTORS SHALL BE HARD WIRE 110V W/ BATTERY BACK UP. MULTIPLE DETECTORS SHALL BE INTERCONNECTED.
11. EGRESS WINDOWS SHALL HAVE A CLEAR OPENING OF NOT LESS THAN 20 INCHES IN WIDTH, 24 INCHES IN HEIGHT, AND 5.7 SQ.FT. IN AREA. THE BOTTOM OF THE OPENING SHALL BE NOT MORE THAN 44" OFF THE FLOOR.

NOTE:
CONTRACTORS MUST VERIFY OPENINGS WITH DOORS AND WINDOWS MANUFACTURES.

AREA CALCULATION

Comments	Area
1ST FLOOR LIVING AREA	618 SF
2ND FLOOR LIVING AREA	914 SF
	1532 SF
GARAGE	237 SF
LANAI	96 SF
ENTRY	38 SF
	371 SF
Grand total	1903 SF

WINDOWS SCHEDULE

Mark	Rough Opening Width	Rough Opening Height	Description	Count
1	3' - 2"	4' - 11"	2455H Egress	2
2	2' - 3"	3' - 3"	1/2 335H	1
3	4' - 6"	4' - 11"	3455H	2
Grand total: 5				5

DOOR SCHEDULE1

Mark	Description	Rough Width	Rough Height	Finish Comment
1	1668 Interior Door	1' - 6"	6' - 8"	
2	2068 INTERIOR DOOR	2' - 0"	6' - 8"	
3	2668 POCKET DOOR	2' - 6"	6' - 8"	
4	2668 INTERIOR DOOR	2' - 6"	6' - 8"	
5	2868 INTERIOR DOOR	2' - 8"	6' - 8"	
6	2868 SC DOOR TO GARAGE	2' - 8"	6' - 8"	20 MIN RATING/AUTO CLOSURE
7	3080 SC/MTL FRONT DOOR	3' - 4"	8' - 2"	
8	2-2668 INTERIOR DOOR	5' - 0"	6' - 8"	
9	8068 XX SGD	8' - 2"	6' - 8"	
10	8'0 x 8'0 Garage Door	8' - 0"	8' - 0"	
11	2-2068 INTERIOR DOOR	4' - 0"	6' - 8"	
Grand total				

FLOOR/ELECT PLANS

SHEET INFORMATION
PLAN A
RIGHT

PROJECT INFORMATION
BELMONT
PALM SPRINGS, FLORIDA

D·R·HORTON
America's Builder
www.drhorton.com
6123 LYONS ROAD, COCONUT CREEK, FL 33073 Tel: (954) 949-3000 Fax: (954) 928-8921

SPECIALTY ENGINEERING CONSULTANTS, Inc
1599 SW 30th AVE.
SUITE #20
BOYNTON BEACH, FL 33426

DADE - BROWARD - PALM BEACH
FL. CA. #009217

561 - 752 - 5440 OFFICE
561 - 752 - 5542 FAX

FILE NAME.

SCALE

DATE 5/28/2021

RVD. BY

DRWN. BY C.L.

REVISION

SEAL
D. ADAM LeBLANC, PE FL #77012

SHEET #
AR-1

I:\DR HORTON\BELMONT\MASTER PLANS\PLAN-AR MASTER.rvt

ELECTRICAL LEGEND

- SURFACE MOUNTED LIGHT
- WALL MOUNTED LIGHT
- RECESSED HIGH HAT
- RECESSED VAPOR PROOF LIGHT
- SURFACE MOUNTED FLUORESCENT FIXTURE
- RECESSECED FLUORESCENT FIXTURE
- HEAT LAMP/ EXHAUST FAN COMBINATION
- FLOOD LIGHT
- JUNCTION BOX
- EXHAUST FAN
- TRACK LIGHTING FIXTURE
- SWITCH
- 3 WAY SWITCH
- 4 WAY SWITCH
- DIMMER SWITCH
- PUSH BUTTON-GARAGE DR OPENER
- PUSH BUTTON-GARAGE DR OPENER
- TIME SWITCH
- WEATHER PROOF SWITCH
- DEDICATED RECEPTACLE
- DUPLEX RECEPTACLE 110/120
- QUADRUPLEX RECEPTACLE
- FLOOR RECEPTACLE
- BREAKER PANEL
- ELECTRIC METER
- MAIN DISCONNECT PANEL
- DEDICATED DISCONNECT PANEL
- ROUTED WIRE
- TELEPHONE JACK
- TELEVISION JACK
- INTERCOM
- SECURITY SYSTEM
- CHIMES
- THERMOSTAT
- TIMER RELAY
- SMOKE DETECTOR
- GARAGE DOOR OPENER
- PADDLE FAN
- SWITCH ACTIVATED RECEPTACLE
- WEATHER PROOF RECEPTACLE
- GROUND FAULT INTERRUPTER RECEPTACLE

GENERAL NOTES PER CODE IN EFFECT: FBC 2020, 7TH EDITION,NEC 2020

1. ALL RECEPTACLES TO BE TAMPER RESISTANT THROUGHOUT THE HOUSE (NEC 406.11)
2. ALL 15 AND 20-AMP LIGHTING AND RECEPTACLE CIRCUITS (EXCEPT WHERE GFIC IS REQUIRED) MUST BE ARC-FUALT, INCLUDING DINING RECEPTACLES (NEC 210.12)
3. ALL EXTERIOR RECEPTACLES WILL NEED TO BE WEATHER RESISTANT (NEC 406.8)
4. POOL PUMP/SPA MOTORS WILL REQUIRE GFCI PROTECTION (NEC 680.22 B)
5. GFI PROTECTION WILL BE REQUIRED FOR ALL GARAGE DOOR OPENERS (NEC 210.8)
6. GROUND BAR TO BE ADDED AT SERVICE ENTRANCE TO INTER SYSTEMS (NEC 250.94).

ELECTRICAL PANEL 'A'

NO	POLE TRIP	KVA	DESCRIPTION	WIRE	NO	POLE TRIP	KVA	DESCRIPTION	WIRE
1	2/60	5.0	AIR HANDLER	#8	2	2/25	4.5	HOTWATER HEATER	#10
3					4				
5	2/50		A/C COMP.	#8	6	2/50	12.0	RANGE/OVEN	#6
7					8				
9	1/20	1.0	DISH WASHER GFI	#12	10	2/30	5.0	DRYER	#10
11	1/20	1.0	REFRIGERATOR GFI	#12	12				
13	1/20	1.5	MICROWAVE/HOOD FAN	#12	14	1/20	1.5	SMOKE/CABON DETECTOR GFI (AF)	#12
15	1/20	1.5	WASHER GFI	#12	16	1/20	1.5	GARAGE DOOR OPENER GFI (AF)	#12
17	1/20		GENERAL LIGHTING GARAGE (AF)	#12	18	1/20	1.5	DINING ROOM REC (AF)	#12
19	1/20	1.5	SMALL APPLIANCES (AF)	#12	20	1/20	1.5	SMALL APPLIANCES (AF)	#12
21	1/15		GENERAL LIGHTING MASTER (AF)	#14	22	1/20		GENERAL LIGHTING LAUNDRY(AF)	#12
23	1/15		GENERAL LIGHTING MBATH (AF)	#14	24	1/15		GENERAL LIGHTING LIVING/DINING (AF)	#14
25	1/15		GENERAL LIGHTING BR2/BATH 2 (AF)	#14	26	1/15		GENERAL LIGHTING KITCHEN/FOYER/P.R.(AF)	#14
27	1/15		GENERAL LIGHTING HALLWAY (AF)	#14	28	1/15		EXTERIOR LIGHTING (AF)	#14
29	1/20	1.5	DISPOSAL GFI	#12	30	1/20		BATHROOM REC. (GFI)	#12
31	1/15		GENERAL LIGHTING BR3 (AF)	#14	32				
33					34				
35					36				
37					38				
39			SPARE		40			SPARE	
41			SPARE		42			SPARE	

1769	sq. ft. @ 3 watts sq. ft	5307	watts
3	Small Appliance Circuits @ 1500 watts ea. **(Minimum is 2)**	4500	watts
1	Laundry Circuit(s) @ 1500 watts ea. **(Minimum is 1)**	1500	watts
12000	Range **(Nameplate Rating)**	12000	watts
4500	Electric Water Heater	4500	watts
5000	Electric Clothes Dryer **(Enter larger: 5000 Watts or Nameplate Rating)**	5000	watts
1000	Dishwasher	1000	watts
1500	Disposal	1500	watts
1000	Refrigerator	1000	watts
1500	Microwave Oven	1500	watts
1500	Garage Door Opener	1500	watts
		0	watts
		0	watts
		0	watts
		0	watts
		0	watts
	Total Calculated Load (less HVAC)	**39307**	**watts**

Service Demand

General Load:

First 10kw of Total Calculated Load (less HVAC) @ 100%	10000	watts
Remainder of Total Calculated Load (less HVAC) @ 40%	11722.8	watts
Total General Load	**21722.8**	**watts**

HVAC Load:

10000	Air Conditioning Load @ 100% (Volts X Amps = Watts)	5000	watts
	Furnace/Air Handler Load (Volts X Amps = Watts)	0	watts
	Total HVAC Load	**5000**	**watts**

Total General Load		+	Total HVAC Load		=	Calculated Service Load	
21722.8	watts	+	5000	watts	=	26722.8	watts

Calcuated Service Load		,	Service Voltage		=	Minimum Service Ampacity	
26722.8	watts	,	240	volts	=	111.35	amps

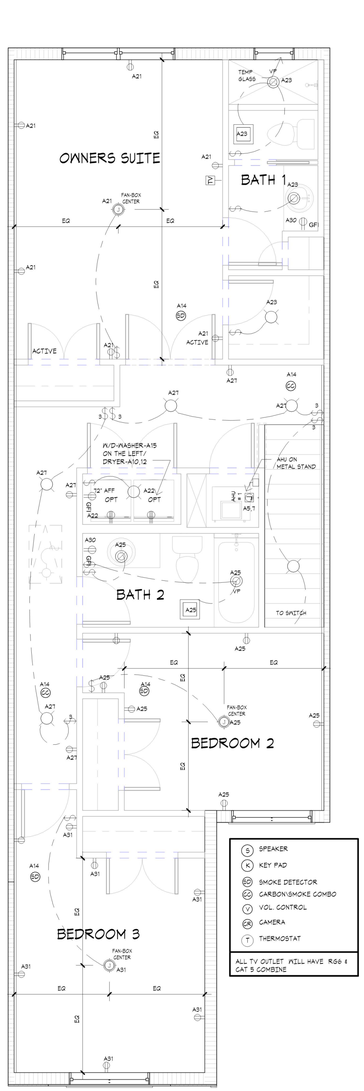

4 2ND FLR ELECTRIC
1/4" = 1'-0"

AT LEAST 75% OF THE LIGHTING MUST BE ON HIGH EFFICIENCY (LED OR FLUORESCENT)
MUST PROVIDE 4 CONDUCTORS TO ALL COOKING UNITS AND DRYERS
ALL RECEPTACLE LOWER THAN 66" FROM FF MUST BE TAMPER RESISTANT
RESIDENTIAL STAIRS MINIMUM OF 1 FOOT CANDLE INSIDE AND OUTSIDE STAIRS FBC R303.6

- (S) SPEAKER
- (K) KEY PAD
- (SD) SMOKE DETECTOR
- (SC) CARBON/SMOKE COMBO
- (V) VOL CONTROL
- (CA) CAMERA
- (T) THERMOSTAT

ALL TV OUTLET WILL HAVE RG6 & CAT 5 COMBINE

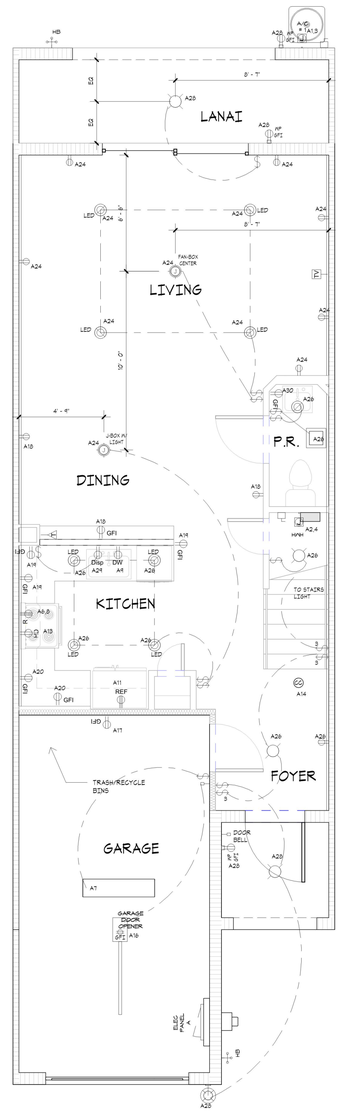

3 1ST FLR ELECTRIC
1/4" = 1'-0"

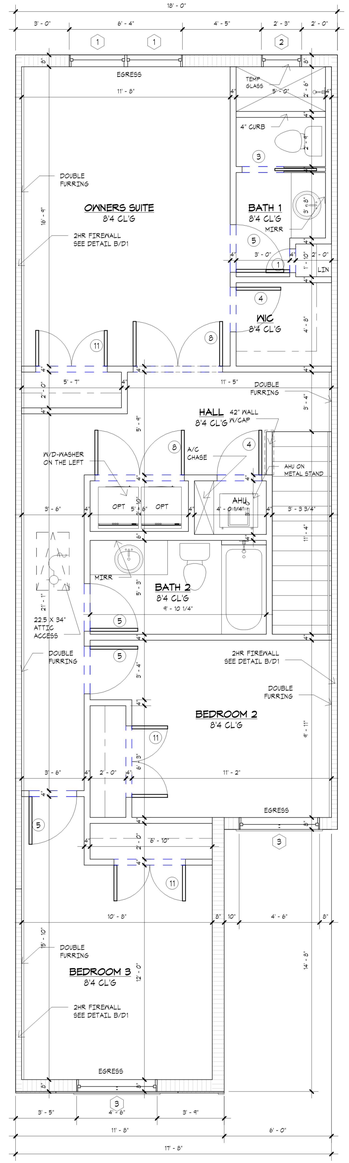

2 2nd Flr
1/4" = 1'-0"

1 1st Flr
1/4" = 1'-0"

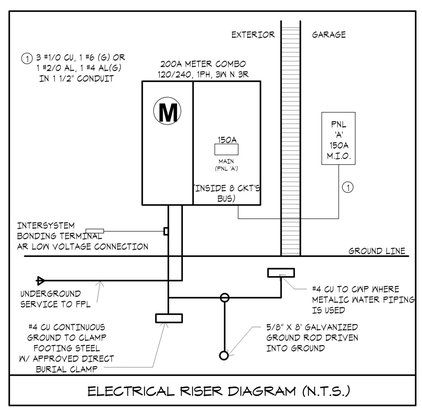

ELECTRICAL RISER DIAGRAM (N.T.S.)

GENERAL NOTES

1. ALL WINDONS AND SLIDING DOOR GLASS SHALL BE : U-FACTOR = 0.54 AND SHGC = 0.65
2. OMITTED
3. DRYER MUST VENT TO OUTSIDE.
4. SET HOTWATER HEATER AT FIN. FLR. LEVEL
5. ALL MECHANICAL FANS MUST BE VENTED TO OUTSIDE.
6. ALL BATH ROOM FLOOR AND BASE SHALL BE IMPERVIOUS MATERIAL WHERE REQUIRED BY LOCAL BUILDING CODE.
7. HVAC CONTRACTOR TO PROVIDE ELECTRICAL BREAKERS IN AIR HANDLER.
8. ALL BATHROOM FIXTURE OUTLETS TO BE 86" AFF OR AS PER BUILDER SPECIFICATIONS.
9. PROVIDE RECEPTACAL FOR MICRO/HOOD FAN 65" A.F.F. CENTER RANGE SPACE.
10. SMOKE DETECTORS SHALL BE HARD WIRE 110V W/ BATTERY BACK UP. MULTIPLE DETECTORS SHALL BE INTERCONNECTED.
11. EGRESS WINDONS SHALL HAVE A CLEAR OPENING OF NOT LESS THAN 20 INCHES IN WIDTH, 24 INCHES IN HEIGHT, AND 5.7 SQ.FT. IN AREA. THE BOTTOM OF THE OPENING SHALL BE NOT MORE THAN 44" OFF THE FLOOR.

NOTE:
CONTRACTORS MUST VERIFY OPENINGS WITH DOORS AND WINDONS MANUFACTURES.

AREA CALCULATION

Comments	Area
1ST FLOOR LIVING AREA	618 SF
2ND FLOOR LIVING AREA	914 SF
	1532 SF
GARAGE	237 SF
LANAI	96 SF
ENTRY	38 SF
	371 SF
Grand total	1903 SF

WINDONS SCHEDULE

Mark	Rough Opening Width	Rough Opening Height	Description	Count
1	3' - 2"	4' - 11"	2455H Egress	2
2	2' - 3"	3' - 3"	1/2 335H	1
3	4' - 6"	4' - 11"	3455H	2
Grand total: 5				5

DOOR SCHEDULE1

Mark	Description	Rough Width	Rough Height	Finish Comment
1	1668 Interior Door	1' - 8"	6' - 8"	
2	2068 INTERIOR DOOR	2' - 0"	6' - 8"	
3	2668 POCKET DOOR	2' - 6"	6' - 8"	
4	2668 INTERIOR DOOR	2' - 6"	6' - 8"	
5	2868 INTERIOR DOOR	2' - 8"	6' - 8"	
6	2868 SC DOOR TO GARAGE	2' - 8"	6' - 8"	20 MIN RATING/AUTO CLOSURE
7	3080 SC/MTL FRONT DOOR	3' - 4"	8' - 2"	
8	2-2668 INTERIOR DOOR	5' - 0"	6' - 8"	
9	8068 XX SGD	8' - 2"	6' - 8"	
10	8'0 x 8'0 Garage Door	8' - 0"	8' - 0"	
11	2-2068 INTERIOR DOOR	4' - 0"	6' - 8"	
Grand total				

FLOOR/ELECT PLANS

SHEET INFORMATION
PLAN A
LEFT

PROJECT INFORMATION
BELMONT
PALM SPRINGS, FLORIDA

D·R·HORTON
America's Builder
www.drhorton.com
6123 LYONS ROAD, COCONUT CREEK, FL 33073 Tel: (954) 949-3000 Fax: (954) 928-8921

SPECIALTY ENGINEERING CONSULTANTS, Inc
1599 SW 30th AVE.
SUITE #20
BOYNTON BEACH, FL 33426

DADE - BROWARD - PALM BEACH
FL. CA. #009217

561 - 752 - 5440 OFFICE
561 - 752 - 5542 FAX

FILE NAME.
SCALE
DATE 5/28/2021
RVD. BY
DRWN. BY C.L.
REVISION

SEAL
D. ADAM LeBLANC, PE FL #77012

SHEET #
AL-1

I:\DR HORTON\BELMONT\MASTER PLANS\PLAN-AL MASTER.rvt

ELECTRICAL LEGEND

- SURFACE MOUNTED LIGHT
- WALL MOUNTED LIGHT
- RECESSED HIGH HAT
- RECESSED VAPOR PROOF LIGHT
- SURFACE MOUNTED FLUORESCENT FIXTURE
- RECESSECED FLUORESCENT FIXTURE
- HEAT LAMP/ EXHAUST FAN COMBINATION
- FLOOD LIGHT
- JUNCTION BOX
- EXHAUST FAN
- TRACK LIGHTING FIXTURE
- SWITCH
- 3 WAY SWITCH
- 4 WAY SWITCH
- DIMMER SWITCH
- PUSH BUTTON-GARAGE DR OPENER
- PUSH BUTTON-GARAGE DR OPENER
- TIME SWITCH
- WEATHER PROOF SWITCH
- DEDICATED RECEPTACLE
- DUPLEX RECEPTACLE 110/120
- QUADRUPLEX RECEPTACLE
- FLOOR RECEPTACLE
- BREAKER PANEL
- ELECTRIC METER
- MAIN DISCONNECT PANEL
- DEDICATED DISCONNECT PANEL
- ROUTED WIRE
- TELEPHONE JACK
- TELEVISION JACK
- INTERCOM
- SECURITY SYSTEM
- CHIMES
- THERMOSTAT
- TIMER RELAY
- SMOKE DETECTOR
- GARAGE DOOR OPENER
- PADDLE FAN
- SWITCH ACTIVATED RECEPTACLE
- WEATHER PROOF RECEPTACLE
- GROUND FAULT INTERRUPTER RECEPTACLE

GENERAL NOTES PER CODE IN EFFECT: FBC 2020, 7TH EDITION,NEC 2017

1. ALL RECEPTACLES TO BE TAMPER RESISTANT THROUGHOUT THE HOUSE (NEC 406.11)
2. ALL 15 AND 20-AMP LIGHTING AND RECEPTACLE CIRCUITS (EXCEPT WHERE GFIC IS REQUIRED) MUST BE ARC-FUALT, INCLUDING DINING RECEPTACLES (NEC 210.12)
3. ALL EXTERIOR RECEPTACLES WILL NEED TO BE WEATHER RESISTANT (NEC 406.8)
4. POOL PUMP/SPA MOTORS WILL REQUIRE GFCI PROTECTION (NEC 680.22 B)
5. GFI PROTECTION WILL BE REQUIRED FOR ALL GARAGE DOOR OPENERS (NEC 210.8)
6. GROUND BAR TO BE ADDED AT SERVICE ENTRANCE TO INTER SYSTEMS (NEC 250.94).

ELECTRICAL PANEL 'A'

NO	POLE TRIP	KVA	DESCRIPTION	WIRE	NO	POLE TRIP	KVA	DESCRIPTION	WIRE
1	2/60	5.0	AIR HANDLER	# 6	2	2/25	4.5	HOTWATER HEATER	#10
3					4				
5	2/50		A/C COMP.	# 6	6	2/50	12.0	RANGE/OVEN	#6
7					8				
9	1/20	1.0	DISH WASHER GFI	#12	10	2/30	5.0	DRYER	#10
11	1/20	1.0	REFRIGERATOR GFI	#12	12				
13	1/20	1.5	MICROWAVE/HOOD FAN	#12	14	1/20	1.5	SMOKE/CABON DETECTOR GFI (AF)	#12
15	1/20	1.5	WASHER GFI	#12	16	1/20	1.5	GARAGE DOOR OPENER GFI (AF)	#12
17	1/20		GENERAL LIGHTING GARAGE (AF)	#12	18	1/20	1.5	DINING ROOM REC (AF)	#12
19	1/20	1.5	SMALL APPLIANCES (AF)	#12	20	1/20	1.5	SMALL APPLIANCES (AF)	#12
21	1/15		GENERAL LIGHTING MASTER (AF)	#14	22	1/20		GENERAL LIGHTING LAUNDRY(AF)	#12
23	1/15		GENERAL LIGHTING MBATH (AF)	#14	24	1/15		GENERAL LIGHTING LIVING/DINING (AF)	#14
25	1/15		GENERAL LIGHTING BR2/BATH 2 (AF)	#14	26	1/15		GENERAL LIGHTING KITCHEN/FOYER/P.R.(AF)	#14
27	1/15		GENERAL LIGHTING HALLWAY (AF)	#14	28	1/15		EXTERIOR LIGHTING (AF)	#14
29	1/20	1.5	DISPOSAL GFI	#12	30	1/20		BATHROOM REC. (GFI)	#12
31	1/15		GENERAL LIGHTING BR3 (AF)	#14	32				
33					34				
35					36				
37					38				
39			SPARE		40			SPARE	
41			SPARE		42			SPARE	

1826	sq. ft. @ 3 watts sq. ft	5478	watts
3	Small Appliance Circuits @ 1500 watts ea. **(Minimum is 2)**	4500	watts
1	Laundry Circuit(s) @ 1500 watts ea. **(Minimum is 1)**	1500	watts
12000	Range **(Nameplate Rating)**	12000	watts
4500	Electric Water Heater	4500	watts
5000	Electric Clothes Dryer **(Enter larger: 5000 Watts or Nameplate Rating)**	5000	watts
1000	Dishwasher	1000	watts
1500	Disposal	1500	watts
1000	Refrigerator	1000	watts
1500	Microwave Oven	1500	watts
1500	Garage Door Opener	1500	watts
		0	watts
		0	watts
		0	watts
		0	watts
		0	watts
	Total Calculated Load (less HVAC)	**39478**	**watts**

Service Demand

General Load:

First 10kw of Total Calculated Load (less HVAC) @ 100%	10000	watts
Remainder of Total Calculated Load (less HVAC) @ 40%	11791.2	watts
Total General Load	**21791.2**	**watts**

HVAC Load:

10000	Air Conditioning Load @ 100% (Volts X Amps = Watts)	8000	watts
	Furnace/Air Handler Load (Volts X Amps = Watts)	0	watts
	Total HVAC Load	**8000**	**watts**

Total General Load		+	Total HVAC Load		=	Calculated Service Load
21791.2	watts	+	8000	watts	=	29791.2 watts

Calcuated Service Load		,	Service Voltage		=	Minimum Service Ampacity
29791.2	watts	,	240	volts	=	124.13 amps

I:\DR HORTON\BELMONT\MASTER PLANS\PLAN-CR MASTER.rvt

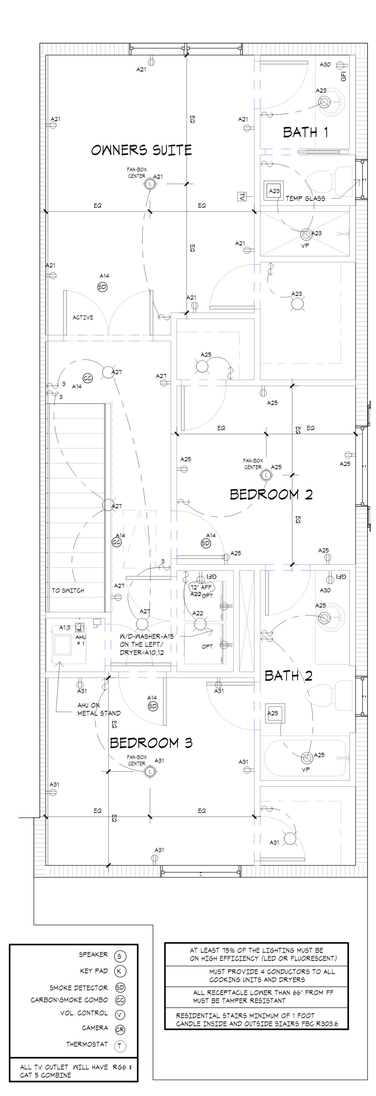

4 2ND FLR ELECTRIC
1/4" = 1'-0"

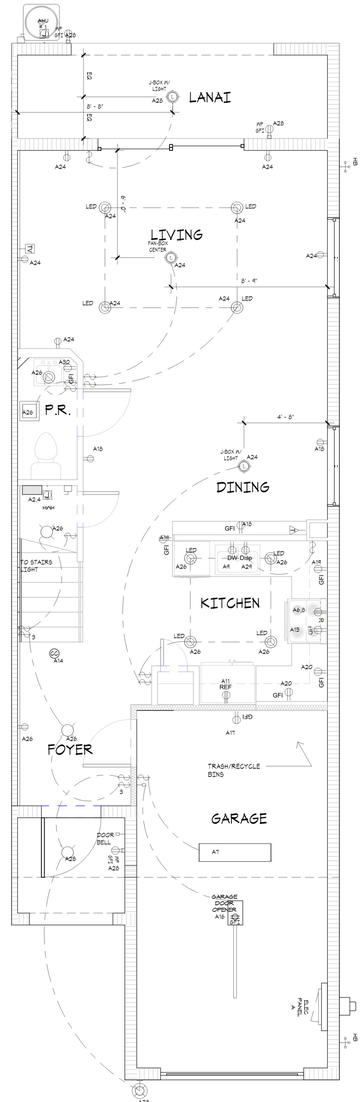

3 1ST FLR ELECTRIC
1/4" = 1'-0"

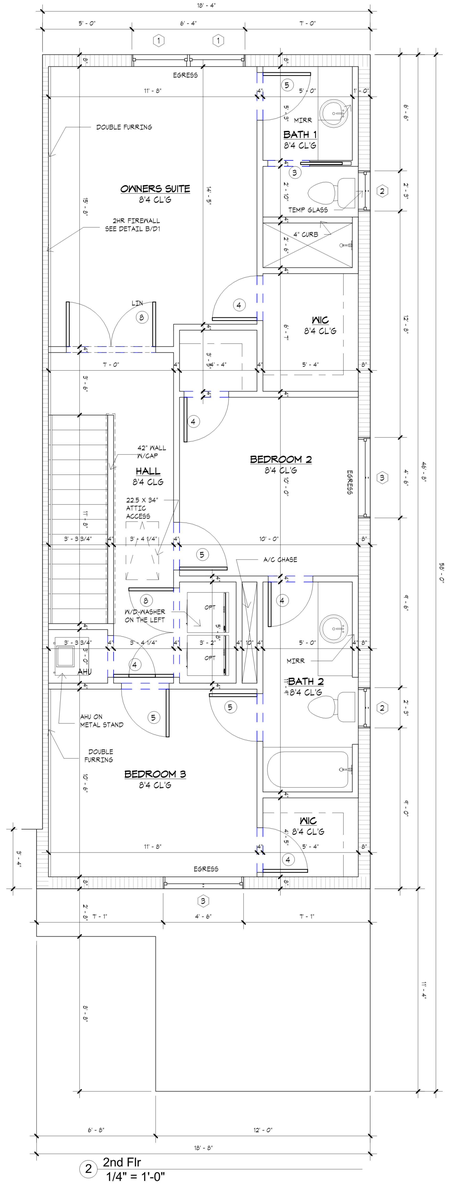

2 2nd Flr
1/4" = 1'-0"

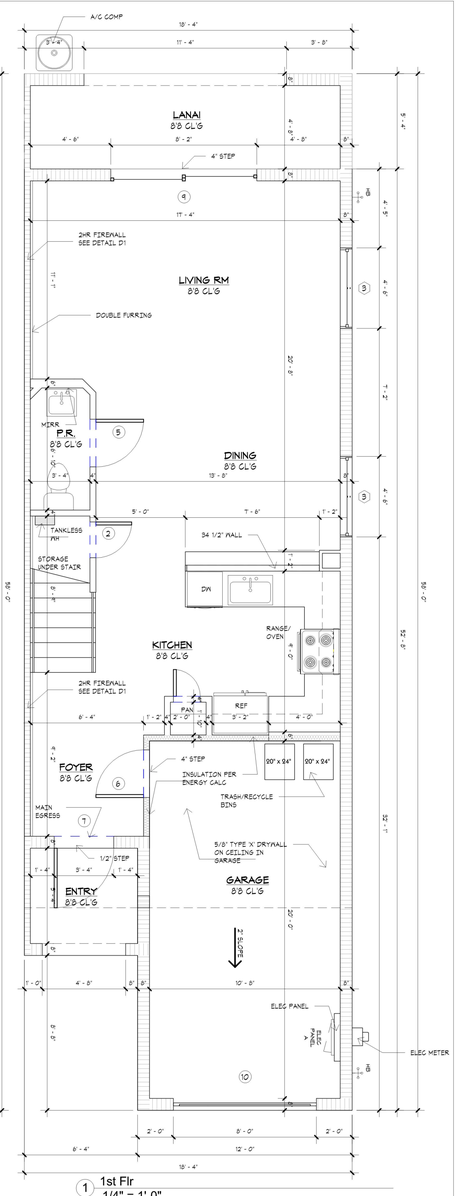

1 1st Flr
1/4" = 1'-0"

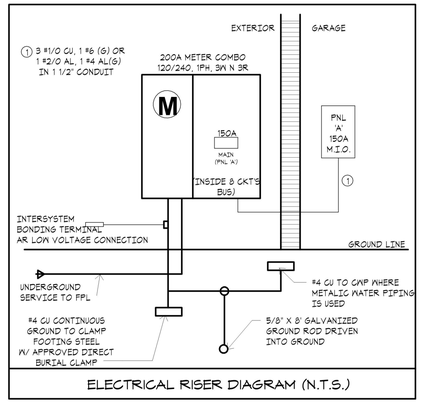

ELECTRICAL RISER DIAGRAM (N.T.S.)

GENERAL NOTES

1. ALL WINDOWS AND SLIDING DOOR GLASS SHALL BE : U-FACTOR = 0.54 AND SHGC = 0.25
2. OMITTED
3. DRYER MUST VENT TO OUTSIDE.
4. SET HOTWATER HEATER AT FIN. FLR. LEVEL
5. ALL MECHANICAL FANS MUST BE VENTED TO OUTSIDE.
6. ALL BATH ROOM FLOOR AND BASE SHALL BE IMPERVIOUS MATERIAL WHERE REQUIRED BY LOCAL BUILDING CODE.
7. HVAC CONTRACTOR TO PROVIDE ELECTRICAL BREAKERS IN AIR HANDLER.
8. ALL BATHROOM FIXTURE OUTLETS TO BE 86" AFF OR AS PER BUILDER SPECIFICATIONS.
9. PROVIDE RECEPTACAL FOR MICRO/HOOD FAN 65" A.F.F. CENTER RANGE SPACE.
10. SMOKE DETECTORS SHALL BE HARD WIRE 110V W/ BATTERY BACK UP. MULTIPLE DETECTORS SHALL BE INTERCONNECTED.
11. EGRESS WINDOWS SHALL HAVE A CLEAR OPENING OF NOT LESS THAN 20 INCHES IN WIDTH, 24 INCHES IN HEIGHT, AND 5.7 SQ.FT. IN AREA. THE BOTTOM OF THE OPENING SHALL BE NOT MORE THAN 44" OFF THE FLOOR.

NOTE:
CONTRACTORS MUST VERIFY OPENINGS WITH DOORS AND WINDOWS MANUFACTURES.

AREA CALCULATION

Comments	Area
1ST FLOOR LIVING AREA	629 SF
2ND FLOOR LIVING AREA	817 SF
	1446 SF
GARAGE	244 SF
LANAI	98 SF
ENTRY	38 SF
	380 SF
Grand total	1826 SF

WINDOWS SCHEDULE

Mark	Rough Opening Width	Rough Opening Height	Description	Count
1	3' - 2"	4' - 11"	245 SH Egress	2
2	2' - 3"	3' - 3"	1/2 335H	2
3	4' - 6"	4' - 11"	2455H	4
Grand total: 8				8

DOOR SCHEDULE1

Mark	Description	Rough Width	Rough Height	Finish Comment
1	1668 INTERIOR DOOR	1' - 6"	6' - 8"	
2	2068 INTERIOR DOOR	2' - 0"	6' - 8"	
3	2668 POCKET DOOR	2' - 6"	6' - 8"	
4	2868 INTERIOR DOOR	2' - 6"	6' - 8"	
5	2868 INTERIOR DOOR	2' - 8"	6' - 8"	
6	2868 SC DOOR TO GARAGE	2' - 8"	6' - 8"	20 MIN RATING/AUTO CLOSURE
7	3080 SC/MTL FRONT DOOR	3' - 4"	8' - 2"	
8	2-2668 INTERIOR DOOR	5' - 0"	6' - 8"	
9	8080 XX SGD	8' - 2"	6' - 8"	
10	8'0 x 8'0 Garage Door	8' - 0"	8' - 0"	
Grand total				

FLOOR/ELECT PLANS

SHEET INFORMATION
PLAN C
RIGHT

PROJECT INFORMATION
DEERFIELD-27
DEERFIELD BEACH, FLORIDA

D·R·HORTON
America's Builder
www.drhorton.com
6123 LYONS ROAD, COCONUT CREEK, FL 33073 Tel: (954) 949-3000 Fax: (954) 928-8921

SPECIALTY ENGINEERING CONSULTANTS, Inc
1599 SW 30th AVE.
SUITE #20
BOYNTON BEACH, FL 33426
DADE - BROWARD - PALM BEACH
FL. CA. #0009217
561 - 752 - 5440 OFFICE
561 - 752 - 5542 FAX

FILE NAME.
SCALE
DATE 5/28/2021
RVD. BY
DRWN. BY C.L.
REVISION

SEAL
D. ADAM LeBLANC, PE FL #77012

SHEET #
CR-1

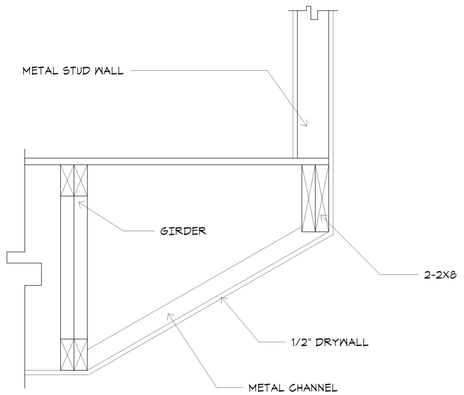

8 D1 STAIRS OPENING FRAMING DETAIL

7 D1

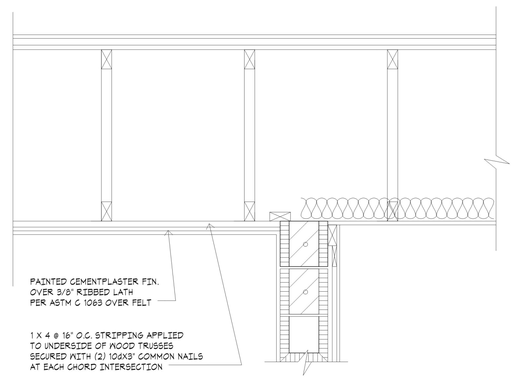

2 D1 LANAI AND ENTRY CEILING CLADDING

MASONRY CONSTRUCTION SEAL ALL OPENINGS WITH FLUID-APPLIED TO MEET AAMA 714 SPECIFICATION : INSTALL PER FMA/AAMA-200

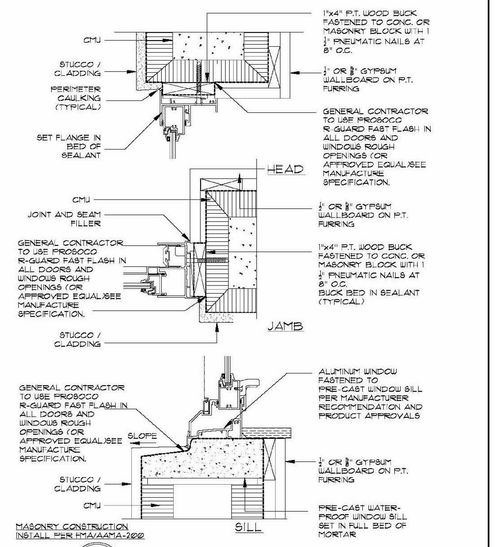

3 D1 BUCK DETAILS @ WINDOW SCALE N.T.S.

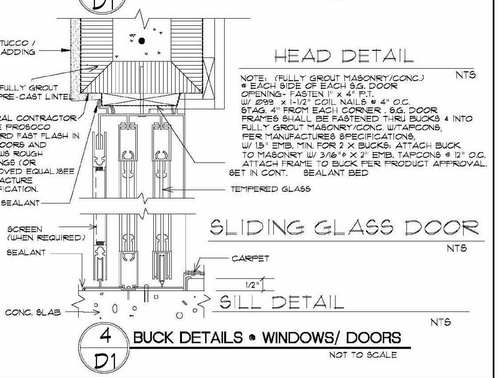

HEAD DETAIL NTS

NOTE: (FULLY GROUT MASONRY/CONC.) @ EACH SIDE OF EACH S.G. DOOR OPENING- FASTEN 1" x 4" P.T. W/ 8D@ x 1-1/2" COIL NAILS @ 4" O.C. STAG. 4" FROM EACH CORNER . S.G. DOOR FRAMES SHALL BE FASTENED THRU BUCKS & INTO FULLY GROUT MASONRY/CONC. W/TAPCONS, PER MANUFACTURES SPECIFICATIONS, W/ 1.5" EMB. MIN. FOR 2 X BUCKS. ATTACH BUCK TO MASONRY W/ 3/16"ø X 3" EMB. TAPCONS @ 12" O.C. ATTACH FRAME TO BUCK PER PRODUCT APPROVAL.

SLIDING GLASS DOOR NTS

SILL DETAIL NTS

4 D1 BUCK DETAILS @ WINDOWS/ DOORS NOT TO SCALE

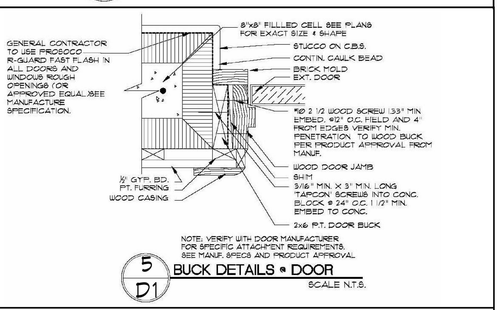

NOTE: VERIFY WITH DOOR MANUFACTURER FOR SPECIFIC ATTACHMENT REQUIREMENTS. SEE MANUF. SPECS AND PRODUCT APPROVAL

5 D1 BUCK DETAILS @ DOOR SCALE N.T.S.

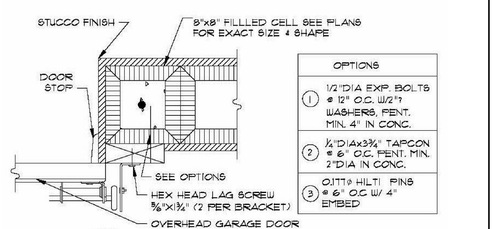

6 D1 GARAGE DOOR BUCK DTL. SCALE N.T.S.

GUARDRAIL NOTES:

1. ALL OPEN GUARDRAILS SHALL HAVE VERT. PICKETS OR ORNAMENTAL FILLER BELOW TOP RAIL WHICH WILL REJECT PASSAGE OF 4" %6124 SPHERE.
2. BOTTOM RAIL CLEARANCE BETWEEN ADJACENT SURFACE NOT TO EXCEED 2" @ STAIR NOSING.
3. ALL HANDRAILING TO TERMINATE ON A POST OR RETURN INTO THE WALL. SEE PLAN FOR DESIGN / LAYOUT.

RAILING NOTES:

1. ALL RAILINGS TO MEET 200# IMPACT LOAD H/ 50# / L.F. TOP RAIL AND 25# / L.F. AT PICKETS OR ORNAMENTAL FILLER.
2. SHOP DRAWINGS TO BE SUBMITTED TO ARCHITECT FOR REVIEW AND TO APPROPRIATE BLDG. DEPT. FOR APPROVAL.

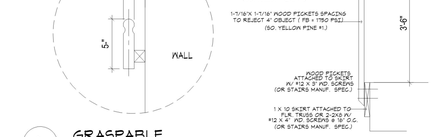

A GRASPABLE HANDRAIL DETAIL

GUARDRAIL DETAIL

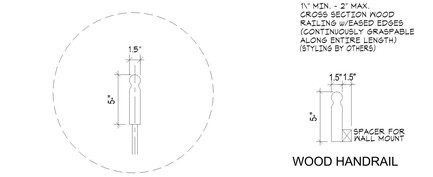

1½" MIN. - 2" MAX. CROSS SECTION WOOD RAILING W/EASED EDGES (CONTINUOUSLY GRASPABLE ALONG ENTIRE LENGTH) (STYLING BY OTHERS)

WOOD HANDRAIL

B GRASPABLE HANDRAIL DETAIL

WOOD HANDRAIL & GUARDRAIL TO BE DESIGNED IN ACCORDANCE TO SECTION 1608.2.2

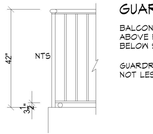

GUARDRAILS @ LANDINGS/BALCONIES:

BALCONIES OR PORCHES WHICH ARE MORE THAN 30" ABOVE FINISHED GROUND LEVEL OR FLOOR LEVEL BELOW SHALL BE PROTECTED BY A GUARDRAIL.

GUARDRAILS SHALL FORM A VERTICAL PROTECTION BARRIER NOT LESS THAN 42 INCHES HIGH.

TYP. RAILING DETAIL @ LANDINGS/BALCONIES

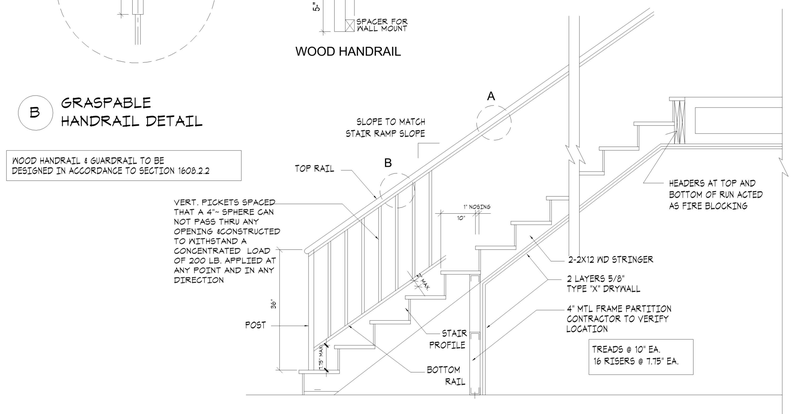

STAIR SECTION & HANDRAIL DETAIL

9 D1 STAIRS DETAIL

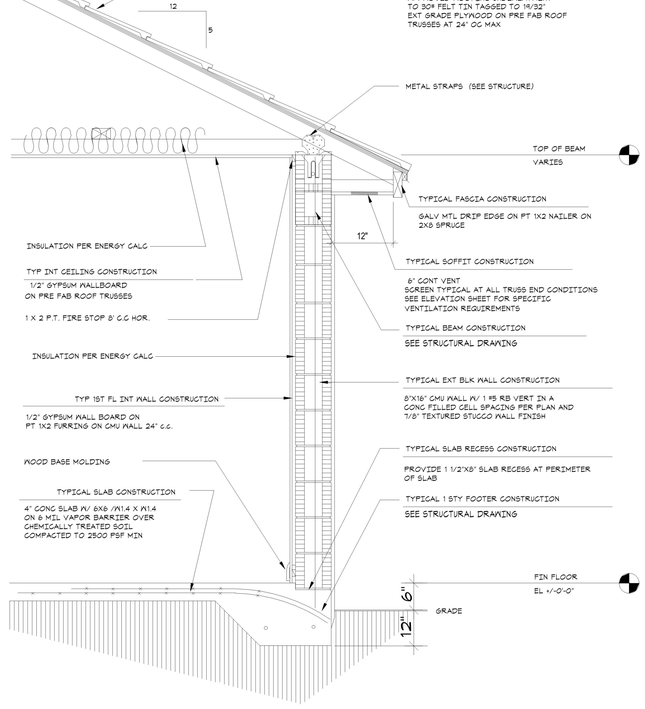

1 D1 1 STORY TYPICAL WALL SECTION

I:\DR HORTON\BELMONT\BUILDING 4-FLEX-D1.rvt

TYPICAL DETAILS

SHEET INFORMATION

PROJECT INFORMATION
BELMONT
PALM SPRINGS, FLORIDA

D.R. HORTON® DHI Listed NYSE
America's Builder
www.drhorton.com
6123 LYONS ROAD, COCONUT CREEK, FL 33073 Tel: (954) 949-3000 Fax: (954) 928-8921

SPECIALTY ENGINEERING CONSULTANTS, Inc
1599 SW 30th AVE.
SUITE #20
BOYNTON BEACH, FL 33426

DADE - BROWARD - PALM BEACH
FL. CA. #009217

561 - 752 - 5440 OFFICE
561 - 752 - 5542 FAX

FILE NAME.	
SCALE	
DATE	5/28/2021
RVD. BY	Checker
DRWN. BY	Author

REVISION SCHEDULE		
NO	DATE	Description

SEAL
D. ADAM LeBLANC, PE FL #77012

SHEET #
D1

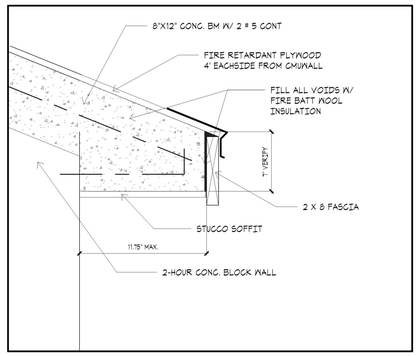

2 D2 FIRE RATED O.H. AT FIREWALL

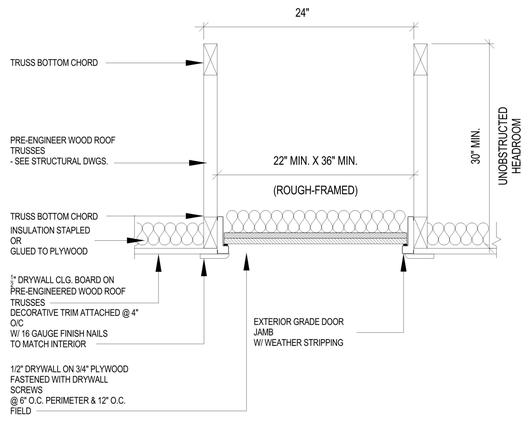

3 D2 ATTIC ACCESS DETAIL

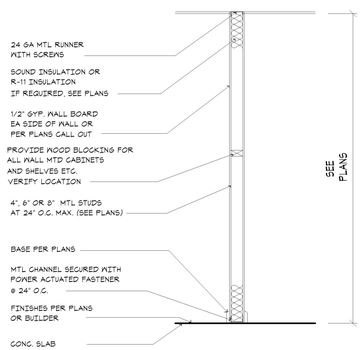

4 D2 INTERIOR NON-BEARING WALL DETAIL

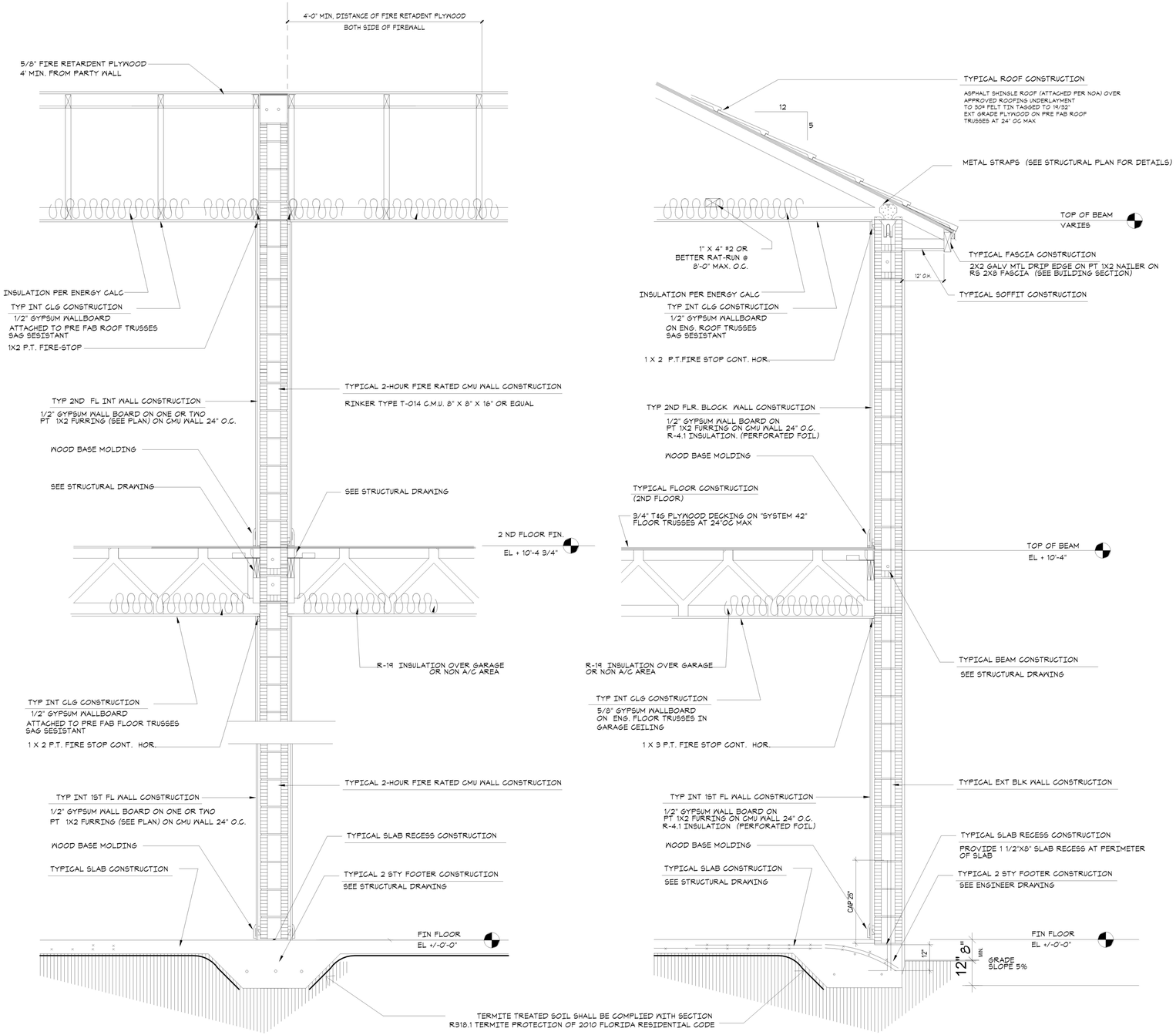

1 D2 2 STORY TYPICAL WALL SECTION & FIREWALL DETAILS

I:\DR HORTON\BELMONT\BUILDING 4-PLEX-D1.rvt

TYP WALL SECTIONS

SHEET INFORMATION

PROJECT INFORMATION

BELMONT

PALM SPRINGS, FLORIDA

D·R·HORTON
DHI Limited NYSE
America's Builder
www.drhorton.com
6123 LYONS ROAD, COCONUT CREEK, FL 33073 Tel: (954) 949-3000 Fax: (954) 928-8921

SPECIALTY ENGINEERING CONSULTANTS, Inc
1599 SW 30th AVE.
SUITE #20
BOYNTON BEACH, FL 33426

DADE - BROWARD - PALM BEACH
FL. CA. #009217

561 - 752 - 5440 OFFICE
561 - 752 - 5542 FAX

FILE NAME.	
SCALE	
DATE	5/28/2021
RVD. BY	Checker
DRWN. BY	Author

REVISION SCHEDULE		
NO	DATE	Description

SEAL
D. ADAM LeBLANC, PE FL #77012

SHEET #

D2

DRAINAGE STATEMENT

BELMONT

Village of Palm Springs, Florida



May 2022

Prepared By:

Michael B. Schorah and Associates, Inc.
1850 Forest Hill Blvd., Suite 206
West Palm Beach, Florida 33406
(561) 968-0080

Martha H. Carter, P.E.
Florida Registration No. 47589

Dated:

I. INTRODUCTION

D.R. Horton, Inc. is proposing to redevelop a site known as Lutheran Church – Kirk Road Lot 2 as a multifamily residential community. The site is generally located North of Forest Hill Boulevard on the west side of Kirk Road in the Village of Palm Springs. The site is bordered on the south by an existing retail parcel; on the west by an existing multi-family residential development; and on the north by the LWDD L-7 Canal. The development parcel is located in Section 12, Township 44 South, Range 42 East in Palm Beach County, Florida.

The purpose of this report is to identify general criteria for a practical and economical system to drain and control the stormwater runoff from the proposed development. These criteria will provide a design basis for a functional positive delay drainage system. The objective, based upon rainfall and durations for selected design storm events, is to provide a surface water management system that complies with regulatory criteria for site grading, finished road grades, finished floor protection, and post-development discharge. A review of the site drainage will involve identifying the requirements of the Village of Palm Springs, the South Florida Water Management District (SFWMD) and the Lake Worth Drainage District (LWDD)

II. EXISTING FACILITIES

The existing site currently contains church buildings, parking and green areas. Review of the Topographic Survey prepared by our office shows the parcel as having ground elevations ranging from approximately 15.0’ (NAVD) along Kirk Road to approximately 17.5’ (NAVD) along the west property boundary and the LWDD L-7 Canal. Runoff from the site either percolates into the ground or generally flows east toward Kirk Road.

Our review of South Florida Water Management District permit files found no previous Environmental Resource permits for the subject site.

III. PROPOSED DRAINAGE SYSTEM

The proposed development, as shown on the Conceptual Site Plan prepared by WGI, Inc., includes 42 multi-family townhome units, roadways, parking and an amenity site. The total area of this project is approximately 5.07 acres. Included in the Site Plan for the parcel are two dry detention areas that will provide water quality treatment and storm attenuation for the development. Discharge from the site will be routed north to a control structure and outfall into LWDD L-7 Canal.

Site drainage design and analysis will involve a review of water quality, quantity and flood protection criteria and a review of SFWMD C-51 Flood Plain criteria. The proposed project is located within Sub-Basin 31 of SFWMD C-51 Basin and subject to the specific criteria of that basin. The basin has an allowable discharge rate of 35 CSM and the 100-year flood stage of elevation 13.1' (NGVD) or 11.6' (NAVD). Soil storage and site storage, on a pre vs. post development basis, will be evaluated and addressed as part of this project.

IV. CONCLUSION

A preliminary analysis of the site drainage features, based on the Conceptual Site Plan and Topographic Survey Data, indicates that this site can be adequately drained and that a storm water management system capable of meeting the applicable regulatory requirements can be designed and permitted for this project.

Department of Engineering and Public Works
P.O. Box 21229
West Palm Beach, FL 33416-1229
(561) 684-4000
FAX: (561) 684-4050
www.pbcgov.com

Palm Beach County Board of County Commissioners
Robert S. Weinroth, Mayor
Gregg K. Weiss, Vice Mayor
Maria G. Marino
Dave Kerner
Maria Sachs
Melissa McKinlay
Mack Bernard

County Administrator
Verdenia C. Baker

"An Equal Opportunity Affirmative Action Employer"

printed on sustainable and recycled paper

January 24, 2022

Dr. Juan F. Ortega, PE
JFO Group Inc.
6671 W Indiantown Road, Suite 50-324
Jupiter, FL 33458

RE: Belmont
Project #: 220110 (previously 210409)
Traffic Performance Standards (TPS) Review

Dear Dr. Ortega:

The Palm Beach County Traffic Division has reviewed the above referenced project Traffic Impact Statement, dated January 12, 2022, pursuant to the Traffic Performance Standards in Article 12 of the Palm Beach County Unified Land Development Code (ULDC). The project is summarized as follows:

Municipality:	Palm Springs
Location:	West side of Kirk Road, about 0.15 miles north of Forest Hill Blvd
PCN:	70-42-44-12-39-000-0020
Access:	One full access driveway connection onto Kirk Road (As used in the study and is NOT an approval by the County through this letter)
Existing Uses:	Church = 11,917 SF
Proposed Uses:	Redevelop the site with: Low-rise Multi-Family Residential = 50 DU
Project Daily Trips:	366
Project Peak Hour Trips:	23 (5/18) AM; 28 (18/10) PM
New Daily Trips:	287
New Peak Hour Trips:	19 (3/16) AM; 22 (15/7) PM
Build-out:	December 31, 2024

Based on our review, the Traffic Division has determined the proposed development does not have significant peak hour traffic impact (as defined in PBC TPS) on the roadway network and, therefore, **meets** the TPS of Palm Beach County.

Please note the receipt of a TPS approval letter does not constitute the review and issuance of a Palm Beach County Right-of-Way (R/W) Construction Permit nor does it eliminate any requirements that may be deemed as site related. For work within Palm Beach County R/W, a detailed review of the project will be provided upon submittal for a R/W permit application. The project is required to comply with all Palm Beach County standards and may include R/W dedication.

No building permits are to be issued by the Village after the build-out date specified above. The County traffic concurrency approval is subject to the Project Aggregation Rules set forth in the Traffic Performance Standards Ordinance.

The approval letter shall be valid no longer than one year from date of issuance, unless an application for a Site Specific Development Order has been approved, an application for a Site Specific Development Order has been submitted, or the approval letter has been superseded by another approval letter for the same property.

If you have any questions regarding this determination, please contact me at 561-684-4030 or email HAkif@pbcgov.org.

Sincerely,

Hanane Akif, P.E.
Professional Engineer
Traffic Division

QB:HA:qg
ec:
Iramis Cabrera, Interim PZ&B Director, Village of Palm Springs
Quazi Bari, P.E., PTOE. Manager – Growth Management, Traffic Division

File: General - TPS - Mun - Traffic Study Review
F:\TRAFFIC\HA\MUNICIPALITIES\APPROVALS\2022\220110 - BELMONT.DOCXN

THE SCHOOL DISTRICT OF
PALM BEACH COUNTY, FL

KRISTIN K. GARRISON
DIRECTOR

WANDA F. PAUL, M.ED., MBA
CHIEF OPERATING OFFICER

PLANNING AND INTERGOVERNMENTAL RELATIONS
3661 INTERSTATE PARK RD. N., STE 200
RIVIERA BEACH, FL. 33404

PHONE: 561-434-8020 / FAX: 561-357-1193
WWW.PALMBEACHSCHOOLS.ORG/PLANNING

SCHOOL CAPACITY AVAILABILITY DETERMINATION (SCAD)

Application	**Submittal Date**	06/23/2021		
	SCAD No.	**21061401F - FLU and 21061401D- D. O.**		
	FLU /Rezoning/D.O. No.	Not Provided - Village of Palm Springs		
	PCN No. / Address	70-42-44-12-39-000-0020 / 1591 Kirk Road		
	Development Name	**Belmont (Bella Sera)**		
	Agent Name	Jerrod Purser		
	SAC No.	173		
	Proposed FLU Amendment **Proposed D. O.**	**Max. 96 Residential Units** **53 Multi-Family Units**		
Impact Review		**Berkshire** Elementary School	**Palm Springs** Middle School	**Forest Hill** High School
	New Students Generated	6	3	4
	Capacity Available	86	78	**-771**
	Utilization Percentage	93%	95%	**142%**
School District Staff's Recommendation	**Based on the findings and evaluation of the proposed development, there will be negative impact on the public school system. Therefore, if the proposed development is approved by the Village Council, School District staff recommends the following condition to mitigate such impacts.** In order to address the school capacity deficiency generated by this proposed development at the District **high school level**, the property owner shall contribute **$54,888.00** to the School District of Palm Beach County prior to the issuance of first building permit. This school capacity contribution is intended to supplement the required school impact fee (impact fee credit has already been applied). _____ Please note that the school impact fee credit is calculated based on the Net Impact Cost per Student, as calculated in the County's latest Impact Fee Ordinance, which was adopted on April 16, 2019.			
Validation Period	1) This determination is valid from **07/07/2021** to **07/06/2022** or the expiration date of the site-specific development order approved during the validation period. 2) A copy of the approved D.O. must be submitted to the School District Planning Dept. prior to **07/06/2022** or this determination will expire automatically on **07/06/2022**.			
Notice	School age children may not necessarily be assigned to the public school closest to their residences. Students in Palm Beach County are assigned annually to schools under the authority of the School Board and by direction of the Superintendent, public school attendance zones are subject to change.			

Joyce Cai

School District Representative Signature

July 7, 2021

Date

Joyce C. Cai, Senior Planner

Print Name & Title

joyce.cai@palmbeachschools.org

Email Address

CC: Iramis Cabrera, PZ&B Interim Director, Village of Palm Springs
Joyell Shaw, PIR Manager, School District of Palm Beach County

THE SCHOOL DISTRICT OF PALM BEACH COUNTY, FL

MICHAEL J. BURKE
SUPERINTENDENT

OFFICE OF THE SUPERINTENDENT
3300 FOREST HILL BOULEVARD, C-316
WEST PALM BEACH, FL 33406-5869

PHONE: 561-649-6833 / FAX: 561-649-6837
WWW.PALMBEACHSCHOOLS.ORG

FRANK A. BARBIERI, JR., ESQ.
BOARD CHAIRMAN

KAREN M. BRILL
BOARD VICE CHAIR

MARCIA ANDREWS
ALEXANDRIA AYALA
BARBARA MCQUINN
DEBRA L. ROBINSON, M.D.
ERICA WHITFIELD

May 12, 2022

Sent Via Email

The Honorable Mayor Bev Smith and
Members of the Palm Springs Village Council
226 Cypress Lane
Palm Springs, FL 33461

RE: PALM SPRINGS COMMUNITY MIDDLE SCHOOL STUDENT PEDESTRIAN SAFETY

Dear Mayor Smith and Members of the Village Council:

It has come to the District's attention that the Village Council will be considering a proposed multi-family residential development at 1591 Kirk Road, across the street from Palm Springs Community Middle School, at its May 12, 2022 meeting. The new development would add additional traffic impact to student pedestrian activity on Kirk Road during school arrival and dismissal times.

One of the most important tools to manage safe student foot traffic is the retention of the student crosswalk directly in front of the school. After consultation with School Police and our Risk Management team, the District respectfully requests that a pedestrian crossing light be added at the crosswalk by the developer, absent the Village providing crossing guards at this crosswalk.

We greatly appreciate the Village Council's support of the schools in the Village of Palm Springs and look forward to resolving this matter.

Sincerely,

Michael J. Burke
Superintendent of Schools

C: Michael Bornstein, Palm Springs Village Manager
Thomas Ceccarelli, Palm Springs Police Chief
Kim Glas Castro, Assistant Palm Springs Village Manager
Iramis Cabrera, Planning, Zoning and Building Director

LAKE WORTH DRAINAGE DISTRICT

13081 MILITARY TRAIL
DELRAY BEACH, FLORIDA 33484-1105

Board of Supervisors
James M. Alderman
Stephen Bedner
Jeffrey P. Phipps, Sr.
Harry Raucher
John I. Whitworth III
Executive Director
Tommy B. Strowd, P.E.
Attorney
Mark A. Perry, P.A.

April 1, 2021

Iramis Cabrera
Village of Palm Springs
226 Cypress Lane
Palm Springs, Florida 33461-1699

Re: 1591 KIRK ROAD
MULTI-FAMILY DEVELOPMENT (Pulte Homes)
SE Quad of Kirk Road and LWDD's L-7 Canal
PCN: 70-42-44-12-39-000-0020
LWDD Canal No. L-7
LWDD Record No. RI-18-0011

Dear Ms. Cabrera:

This project is located on the south side of the L-7 Canal and is adjacent.

After reviewing the Survey including Canal Cross-Sections, LWDD not require additional right-of-way.

This project will require a drainage connect outfall permit from this District.

LWDD has no objection to the certification of this petition.

Sincerely,

Anne H. Perry

Anne H. Perry

4-29-2021

Hello Iramis,

I have no issues at this time. Please note that a right of way permit with PBC Land Development will be required from the applicant for the driveway modifications.

Regards,
Will

Will Carey, PE
Roadway Production Division
Palm Beach County Engineering & Public Works Dept.
(561) 684-4183 / wcarey@pbcgov.org / Mon-Fri 9am to 6pm



9-7-2021

Iramis:

Good morning. I hope all is well. Here are 2 conditions that we typically use in this situation.

1. The property owner shall post a notice of annual boundary school assignments for students from this development. A sign 11" X 17" shall be posted in a clear and visible location in all sales offices and models with the following:

"NOTICE TO PARENTS OF SCHOOL AGE CHILDREN"

School age children may not necessarily be assigned to the public school closest to their residences. Students in Palm Beach County are assigned annually to schools under the authority of the School Board and, by direction of the Superintendent, public school attendance zones are subject to change. Please contact the Palm Beach County School District Boundary Office at (561) 434-8100 for the most current school assignment(s). (ONGOING: SCHOOL BOARD)

2. Prior to the issuance of the first Certificate of Occupancy (CO), the 10' by 15' school bus shelter shall be constructed by the Property Owner in a location and manner acceptable to the Palm Beach County School Board. Provisions for the bus shelter shall include, at a minimum, a covered area, continuous paved pedestrian and bicycle access from the subject property or use, to the shelter. Maintenance of the bus shelter shall be the responsibility of the residential Property Owner. (CO: MONITORING – School Board)

Michael C. Owens
Senior Planner, Planning & Intergovernmental Relations
Division of Facilities Management

9-7-2021

Iramis,
Based on the size of the lift station it appears that the lift station will be private. The civil plan should identify the lift station and onsite sanitary sewer as private.
As previously stated, if the lift station is private an agreement with property to the south regarding sanitary sewer will be required and indemnification agreement with PBCWUD will be required prior to PBCWUD plan approval. The easement to the property to the south would be dedicated to the property to the south not to PBCWUD.
A portion of the 8" watermain is shown within a 15' PBCUE. The watermain must be centered within a 20'PBCUE.
Meters cannot be installed within driveway
No trees or obstructions within 7.5 feet of fire hydrant (there appears to be a tree too close to the fire hydrant SE of the lift station)
Gate is required at location to the east where sanitary sewer crosses the property line

Thank you,

Jackie Michels, P.E.
Project Manager
Palm Beach County Water Utilities
8100 Forest Hill Blvd.
West Palm Beach, Florida 33413
Phone (561) 493-6116

5/5/2022

Just a single comment:

1) Vehicle gates/traffic arms to be provided with a Click2Enter system installed as the primary access system for fire rescue vehicle entry and a Knox Key Switch (not a Knox Box) installed as a secondary access system. A permit is required for both systems.

Thank you,

Wesley Jolin, IAAI-CFI®
Fire Safety Specialist
Palm Beach County Fire Rescue
wjolin@pbcgov.org
561.233.2695
2300 North Jog Road: Suite 1E-40
West Palm Beach FL 33411

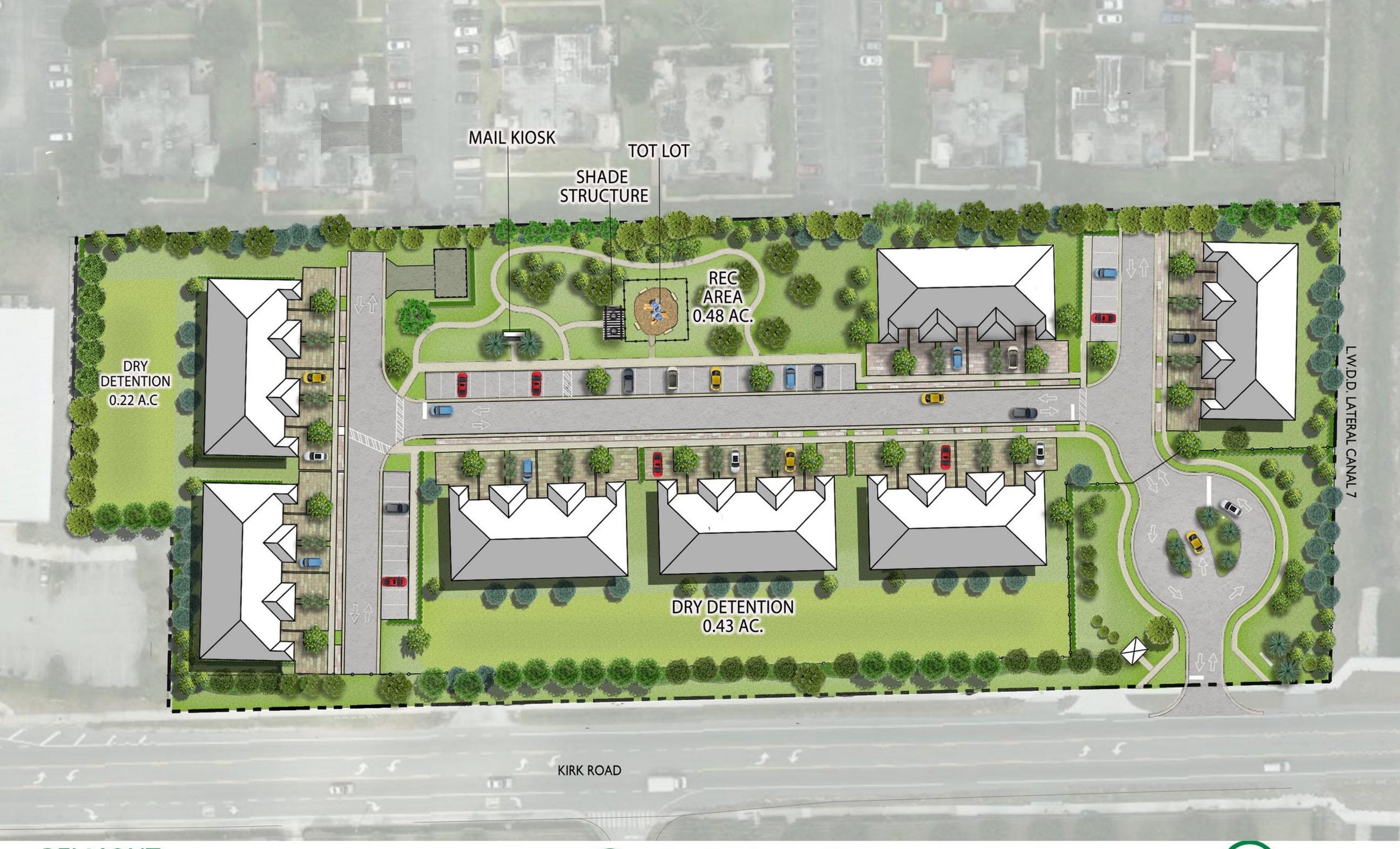

BELMONT

SITE PLAN RENDERING

05-13-2022

DRAWN BY: AE
CHECKED BY: JP

N

0′ 25′ 50′ 100′

SCALE: 1″ = 50′-0″

WGI









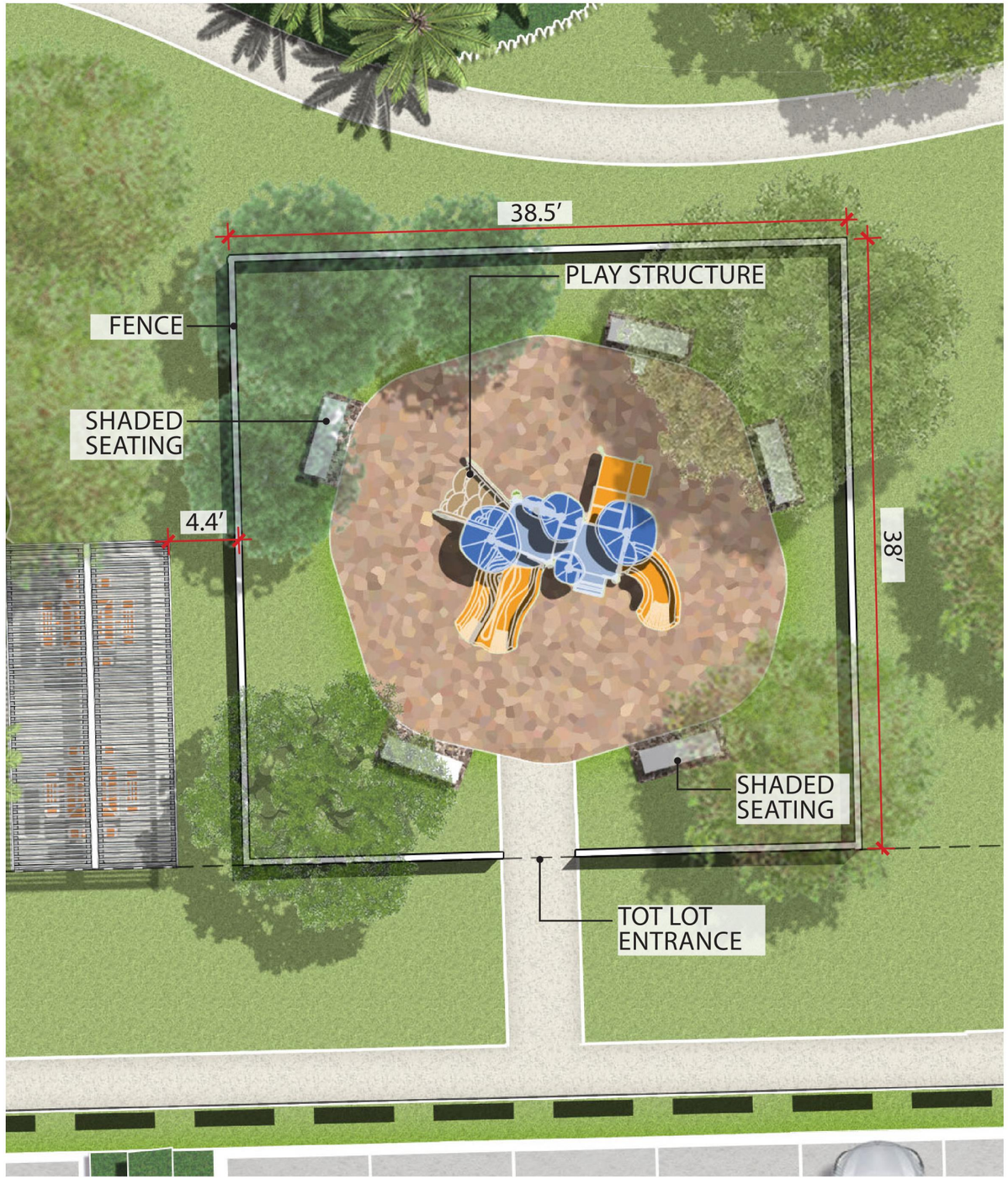

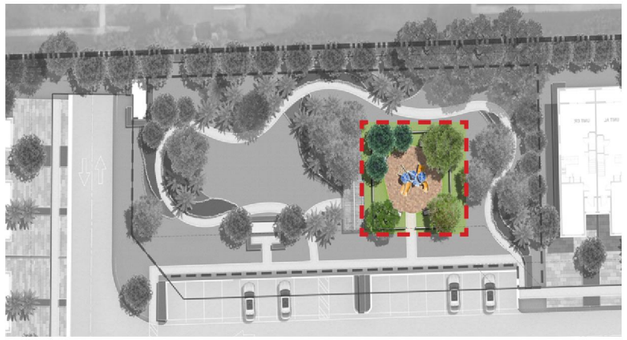

TOT LOT LOCATION



MANUFACTURER:

PLAYWORLD

350-1736

Age 2-12



Belmont | Palm Springs, Florida

06-11-2021

TOT LOT PLAN

N

0′ 4′ 8′ 16′

SCALE: 1/8″ = 1′-0″

MANUFACTURER:

WABASH VALLEY

Model #: SG214D



Table Top Color: Charcoal
Leg Color: Black
Seat Color: Charcoal
Mount: Surface
Size: 40 in. Square
Pattern: Diamond
Total of Picnic: 2



PICNIC TRELLIS LOCATION

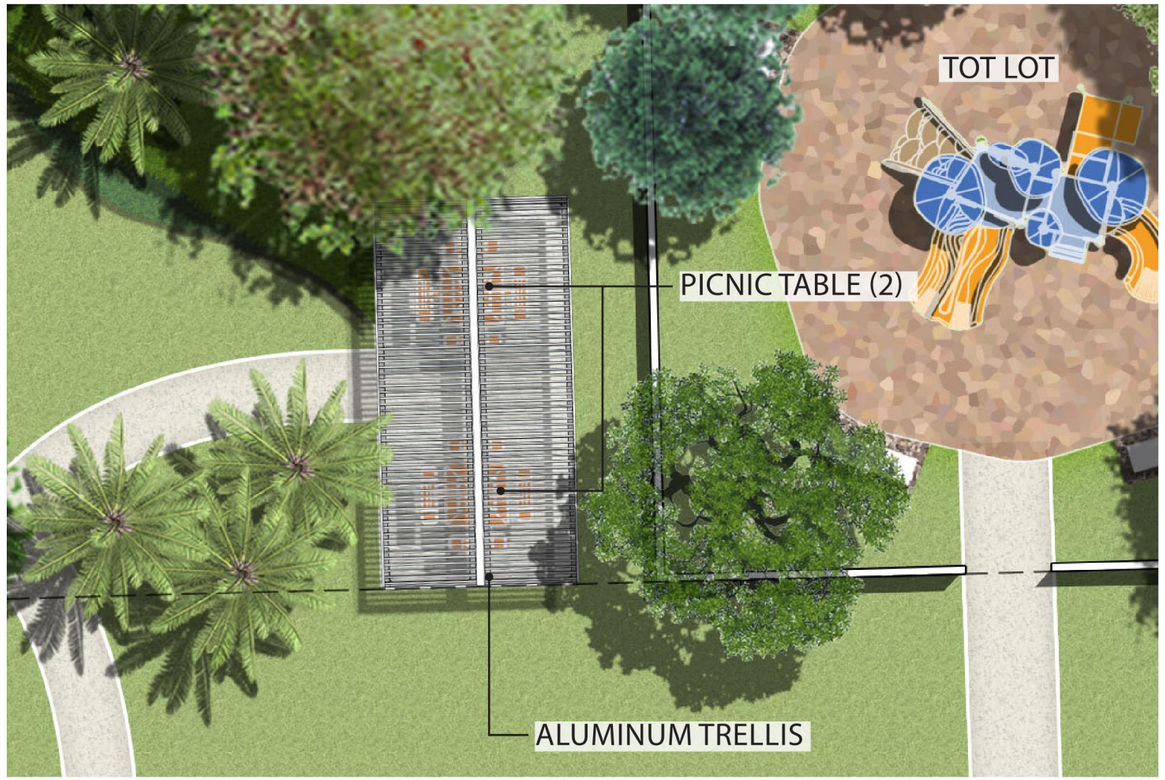

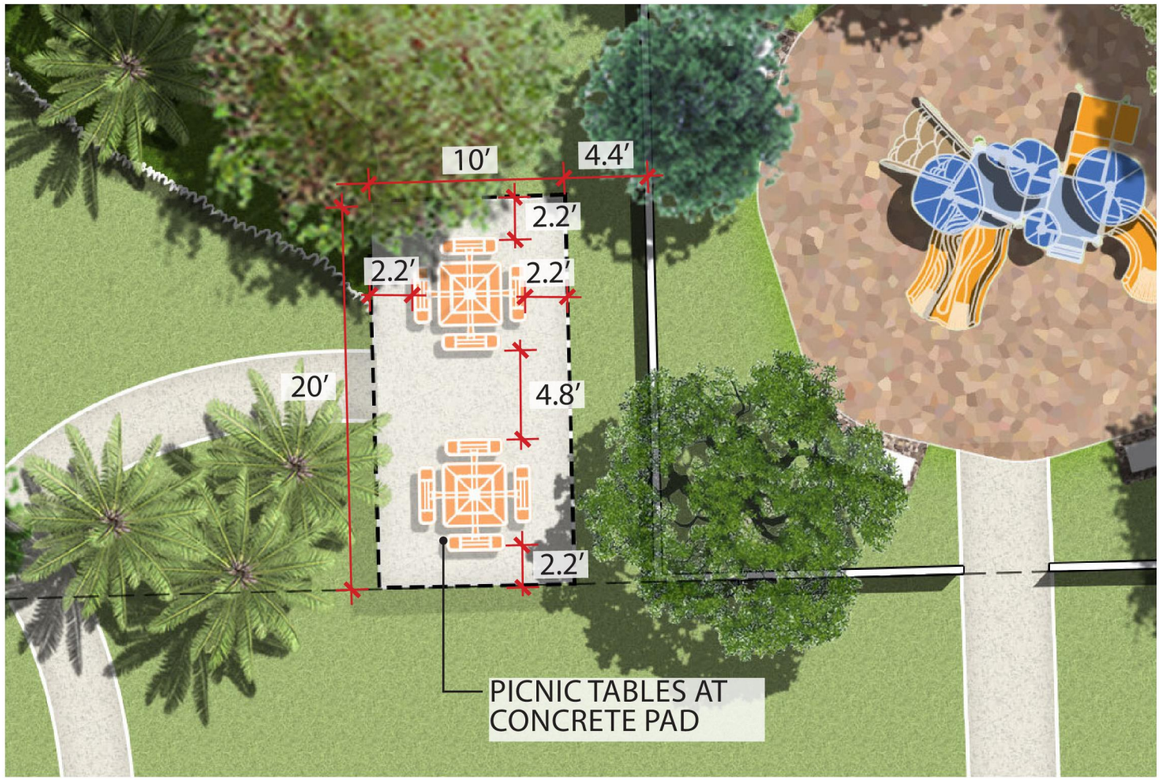

Belmont | Palm Springs, Florida

06-11-2021

PICNIC TRELLIS PLAN AND FURNITURE SELECTION

N

0′ 4′ 8′ 16′

SCALE: 1/8″ = 1′-0″

WGI

Elevation 1



Prepared by: The Beautiful Mailbox Company
3 - 16 Door Units
1 - 8 Door Unit
TOTAL 56 Customer Doors

SUGGESTED SLAB LAYOUT

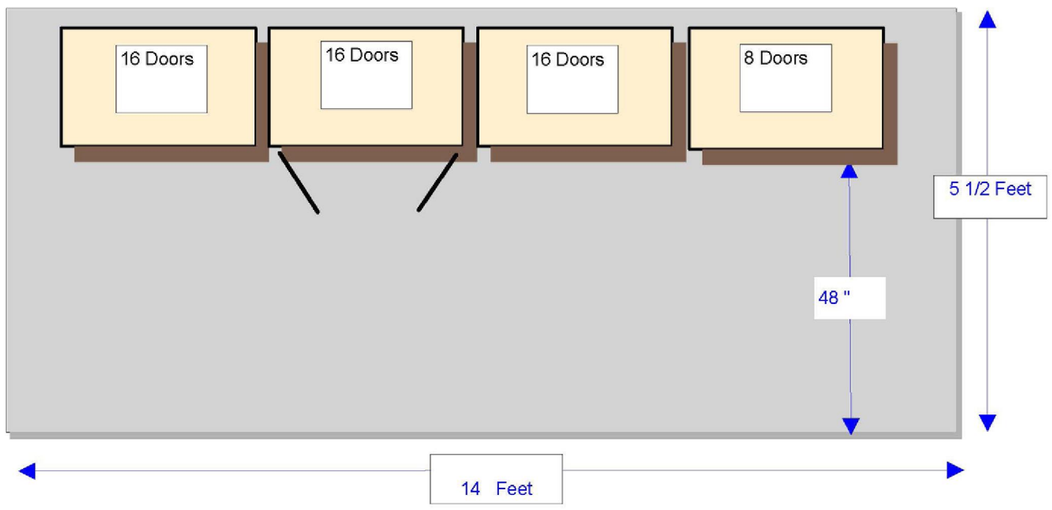



MAIL KIOSK LOCATION

TYPE III - 16 Door CBU



Type I - 8 Door CBU



Express HOMES
A D.R. Horton Company

Belmont

West Palm Beach

ENTRY WALL



FRONT & REAR ELEVATION

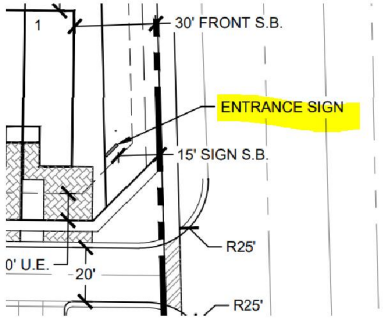

STUCCO REVEALS

SW 7004
Snowbound

Natural Ledgestone Glacier White



Belmont · Kirk Road, West Palm Beach, FL 33406 · drhorton.com

D.R. Horton is equal housing opportunity builder. This map is a schematic for exhibition purposes only and does not represent the exact location or configuration of site features, lot lines, easements, amenities, units, buildings or details shown thereon. All home-site sizes are approximate and may vary. All information on this map, including availability and delivery dates is subject to change without notice or obligation. Florida Certified General Contractor #CGC059394

©Copyright 2021 D.R. Horton, Inc.

Express HOMES
A D.R. Horton Company

Belmont

West Palm Beach

COMMUNITY LOGO



Belmont · Kirk Road, West Palm Beach, FL 33406 · drhorton.com

D.R. Horton is equal housing opportunity builder. This map is a schematic for exhibition purposes only and does not represent the exact location or configuration of site features, lot lines, easements, amenities, units, buildings or details shown thereon. All home-site sizes are approximate and may vary. All information on this map, including availability and delivery dates is subject to change without notice or obligation. Florida Certified General Contractor #CGC059394

©Copyright 2021 D.R. Horton, Inc.

Express HOMES
A D.R. Horton Company

Belmont

West Palm Beach

SCHOOL BUS SHELTER

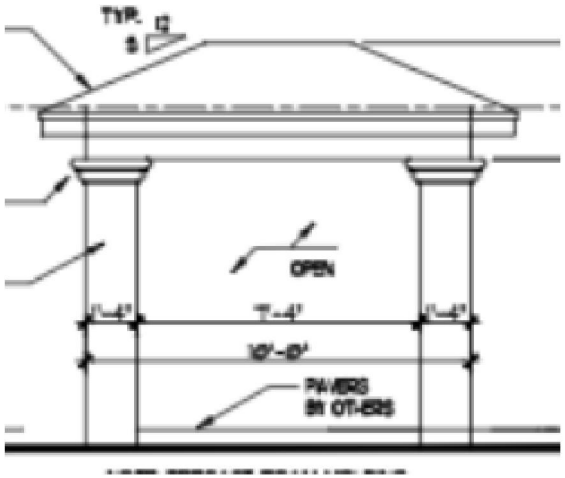

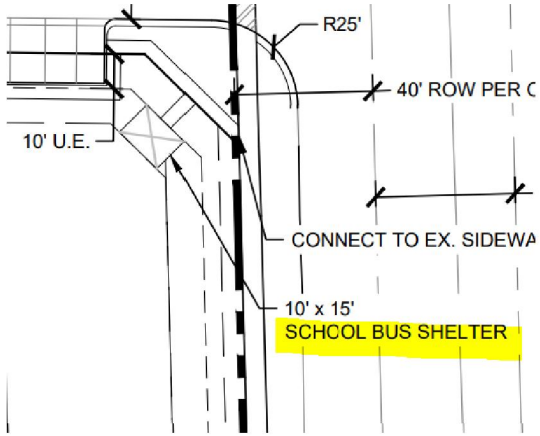

COLUMN

SW 7004
Snowbound

TRIM & FASCIA

SW 9165
Gossamer Veil

ROOF SHINGLE

COLOR HARVARD SLATE

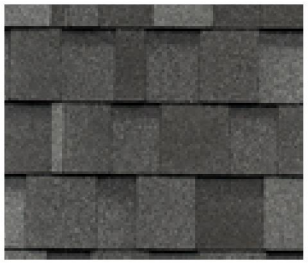

Belmont · Kirk Road, West Palm Beach, FL 33406 · drhorton.com

D.R. Horton is equal housing opportunity builder. This map is a schematic for exhibition purposes only and does not represent the exact location or configuration of site features, lot lines, easements, amenities, units, buildings or details shown thereon. All home-site sizes are approximate and may vary. All information on this map, including availability and delivery dates is subject to change without notice or obligation. Florida Certified General Contractor #CGC059394

©Copyright 2021 D.R. Horton, Inc.

Express HOMES
A D.R. Horton Company

Belmont

West Palm Beach

TRELLIS & PICNIC AREA

Aluminum Trellis

- floor surface concrete

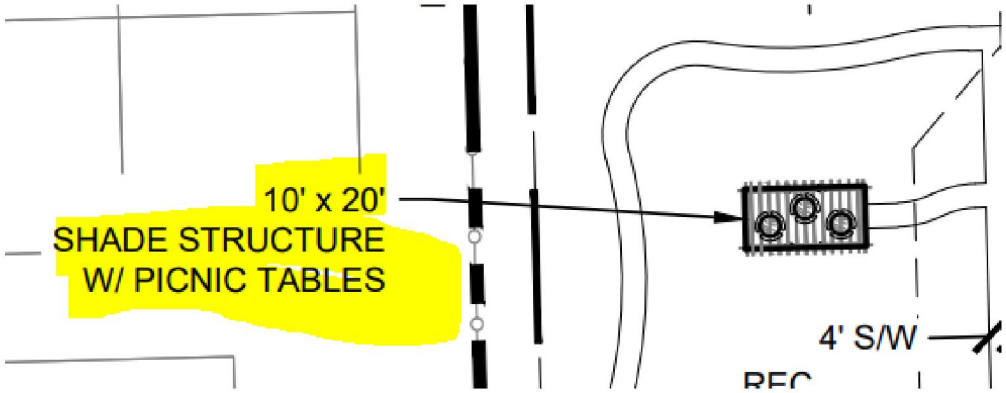

WABASH VALLEY

Model #: SG214D



Table Top Color: Charcoal
Leg Color: Black
Seat Color: Charcoal
Mount: Surface
Size: 40 in. Square
Pattern: Diamond
Total of Picnic: 3

Belmont · Kirk Road, West Palm Beach, FL 33406 · drhorton.com

D.R. Horton is equal housing opportunity builder. This map is a schematic for exhibition purposes only and does not represent the exact location or configuration of site features, lot lines, easements, amenities, units, buildings or details shown thereon. All home-site sizes are approximate and may vary. All information on this map, including availability and delivery dates is subject to change without notice or obligation. Florida Certified General Contractor #CGC059394

©Copyright 2021 D.R. Horton, Inc.

Express HOMES
A D.R. Horton Company

Belmont

West Palm Beach

Tot Lot

PLAYWORLD
The world needs play.



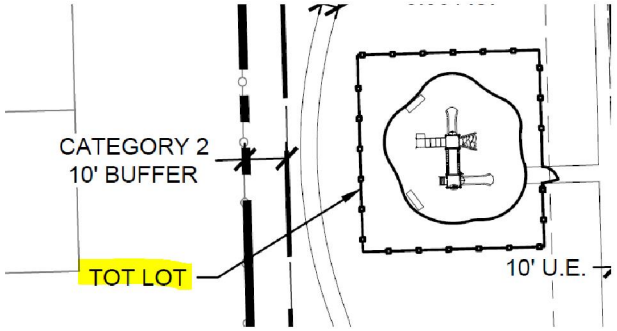

350-1736
Age 2-12



Belmont · Kirk Road, West Palm Beach, FL 33406 · drhorton.com

D.R. Horton is equal housing opportunity builder. This map is a schematic for exhibition purposes only and does not represent the exact location or configuration of site features, lot lines, easements, amenities, units, buildings or details shown thereon. All home-site sizes are approximate and may vary. All information on this map, including availability and delivery dates is subject to change without notice or obligation. Florida Certified General Contractor #CGC059394

©Copyright 2021 D.R. Horton, Inc.

Express HOMES
A D.R. Horton Company

Belmont

West Palm Beach

Aluminum Rail Style
Per Section

Aluminum rail along Kirk Rd., with gates for the Emergency Fire Access, and also a Pedestrian Gate at the south emergency access

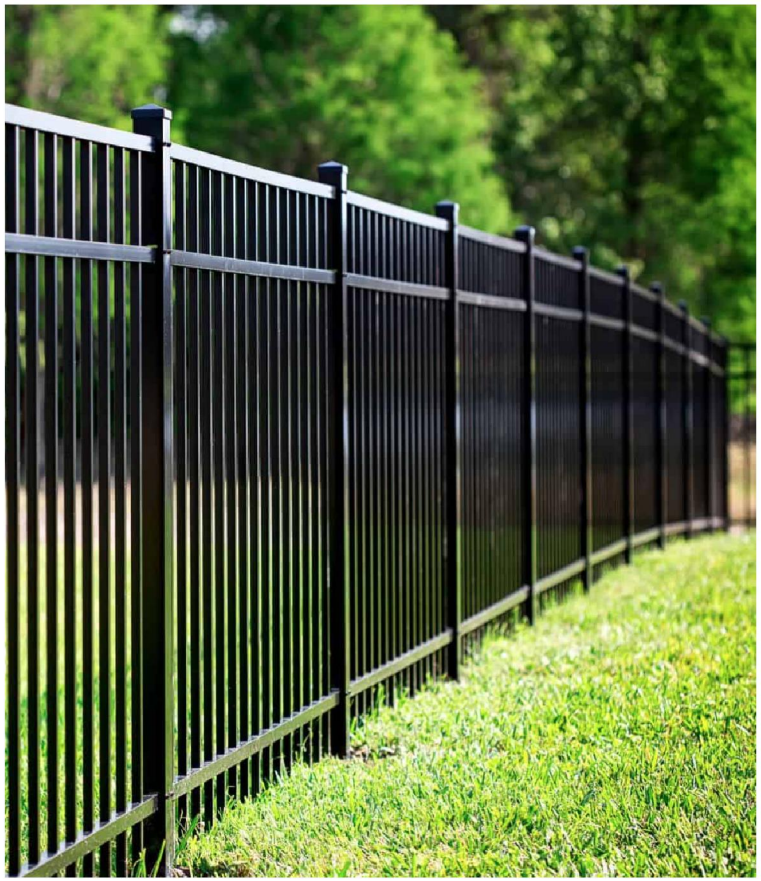

Belmont · Kirk Road, West Palm Beach, FL 33406 · drhorton.com

D.R. Horton is equal housing opportunity builder. This map is a schematic for exhibition purposes only and does not represent the exact location or configuration of site features, lot lines, easements, amenities, units, buildings or details shown thereon. All home-site sizes are approximate and may vary. All information on this map, including availability and delivery dates is subject to change without notice or obligation. Florida Certified General Contractor #CGC059394

©Copyright 2021 D.R. Horton, Inc.






AHEAD




DOLLAR GENERAL
1679






Forest Hill
FOREST AIR


STOP
AHEAD

DISCHARGING
OR LOADING
PASSENGERS
FROM TRAVEL
LANES PROHIBITED

ONLY
RIGHT LANE

SCHOOL BUS

1-877-WINDOWS


STOP
SCHOOL BUS
ONLY
1-877-WINDOWS
STORM TIGHT WINDOWS
www.stormtightwindows.com
CRC046091


STOP
AHEAD


adidas


AHEAD


STOP
SCHOOL BUS
ONLY
RIGHT LANE








DISCHARGING
OR LOADING
PASSENGERS
FROM TRAVEL
LANES PROHIBITED
HOLY CROSS
STOP


STOP

CFN 20170130372

OR BK 29015 PG 1789
RECORDED 04/13/2017 15:30:51
AMT 10.00
Doc Stamp 0.70
Palm Beach County, Florida
Sharon R. Bock,CLERK & COMPTROLLER
Pgs 1789 - 1790; (2pgs)

Prepared by and return to:
GARY WALK, ESQ.

Ciklin Lubitz & O'Connell
515 North Flagler Drive 20th Floor
West Palm Beach, FL 33401
561-832-5900
File Number: **13556-55449**
Will Call No.: **69 mmi**

This is not a certified copy

[Space Above This Line For Recording Data]

This Special Warranty Deed is a transfer of unencumbered real property without consideration and as such is subject to minimum documentary stamp tax under Florida Statutes Section 201.02(1)(a) and Florida Administrative Code Section 12B-4.014(2).

Special Warranty Deed

This Special Warranty Deed made as of the 1st day of April, 2017 between **THE LUTHERAN CHURCH OF THE HOLY CROSS, WEST PALM BEACH, FLORIDA, INC., a Florida not for profit corporation** whose post office address is **1591 Kirk Road, West Palm Beach, FL 33406**, grantor, and **FINESTRA-HOLY CROSS, LLC, a Florida limited liability company** whose post office address is **5701 Swaying Palm Lane, Boynton Beach, FL 33437**, grantee:

(Whenever used herein the terms grantor and grantee include all the parties to this instrument and the heirs, legal representatives, and assigns of individuals, and the successors and assigns of corporations, trusts and trustees)

Witnesseth, that said grantor, for and in consideration of the sum TEN AND NO/100 DOLLARS ($10.00) and other good and valuable considerations to said grantor in hand paid by said grantee, the receipt whereof is hereby acknowledged, has granted, bargained, and sold to the said grantee, and grantee's heirs and assigns forever, the following described land, situate, lying and being in **Palm Beach County, Florida**, to-wit:

Lot 2 of LUTHERAN CHURCH - KIRK ROAD according to the Plat thereof as recorded in Plat Book 117, Page 181 of the public records of Palm Beach County, Florida.

Parcel Identification Number: 70-42-44-12-39-000-0020

Subject to taxes for 2017 and subsequent years; covenants, conditions, restrictions, easements, reservations and limitations of record, if any.

Together with all the tenements, hereditaments and appurtenances thereto belonging or in anywise appertaining.

To Have and to Hold, the same in fee simple forever.

And the grantor hereby covenants with said grantee that the grantor is lawfully seized of said land in fee simple; that the grantor has good right and lawful authority to sell and convey said land; that the grantor hereby fully warrants the title to said land and will defend the same against the lawful claims of all persons claiming by, through or under grantors.

In Witness Whereof, grantor has hereunto set grantor's hand and seal the day and year first above written.

Signed, sealed and delivered in our presence:

This is not a certified copy

Witness Name: Gary Walk

Witness Name: Marilynn M Ives

THE LUTHERAN CHURCH OF THE HOLY CROSS, WEST PALM BEACH, FLORIDA, INC., a Florida not for profit corporation

By: Robert Emch
ROBERT EMCH, President

(Corporate Seal)

State of Florida
County of Palm Beach

The foregoing instrument was acknowledged before me this 10 day of April, 2017 by ROBERT EMCH, President of THE LUTHERAN CHURCH OF THE HOLY CROSS, WEST PALM BEACH, FLORIDA, INC., a Florida not for profit corporation, on behalf of the corporation. He [ ] is personally known to me or [X] has produced a driver's license as identification.

[Notary Seal]

Notary Public, State of Florida at Large

My Commission Expires: _____

MARILYNN M. IVES
Notary Public - State of Florida
My Comm. Expires Apr 1, 2018
Commission # FF 074339
Bonded Through National Notary Assn.

DoubleTime®



Village of Palm Springs

Kirk Road

Property Boundary

The Data is provided "as is" without warranty or any representation of accuracy, timeliness or completeness. The burden for determining accuracy, completeness, timeliness, merchantability and fitness for or the appropriateness for use rests solely on the requester. The Village of Palm Springs make no warranties, express or implied, as to the use of the licensed Data. There are no implied warranties of merchantability or fitness for a particular purpose.The requester acknowledges and accepts the limitations of the Data, including the fact that the Data is dynamic and is in a constant state of maintenance, correction and update.

Data Source: Tax Deed Parcels and Village Limits data provided by the Village of Palm Springs, Parcels provided by Palm Beach County, Basemap provided by ESRI World Imagery.

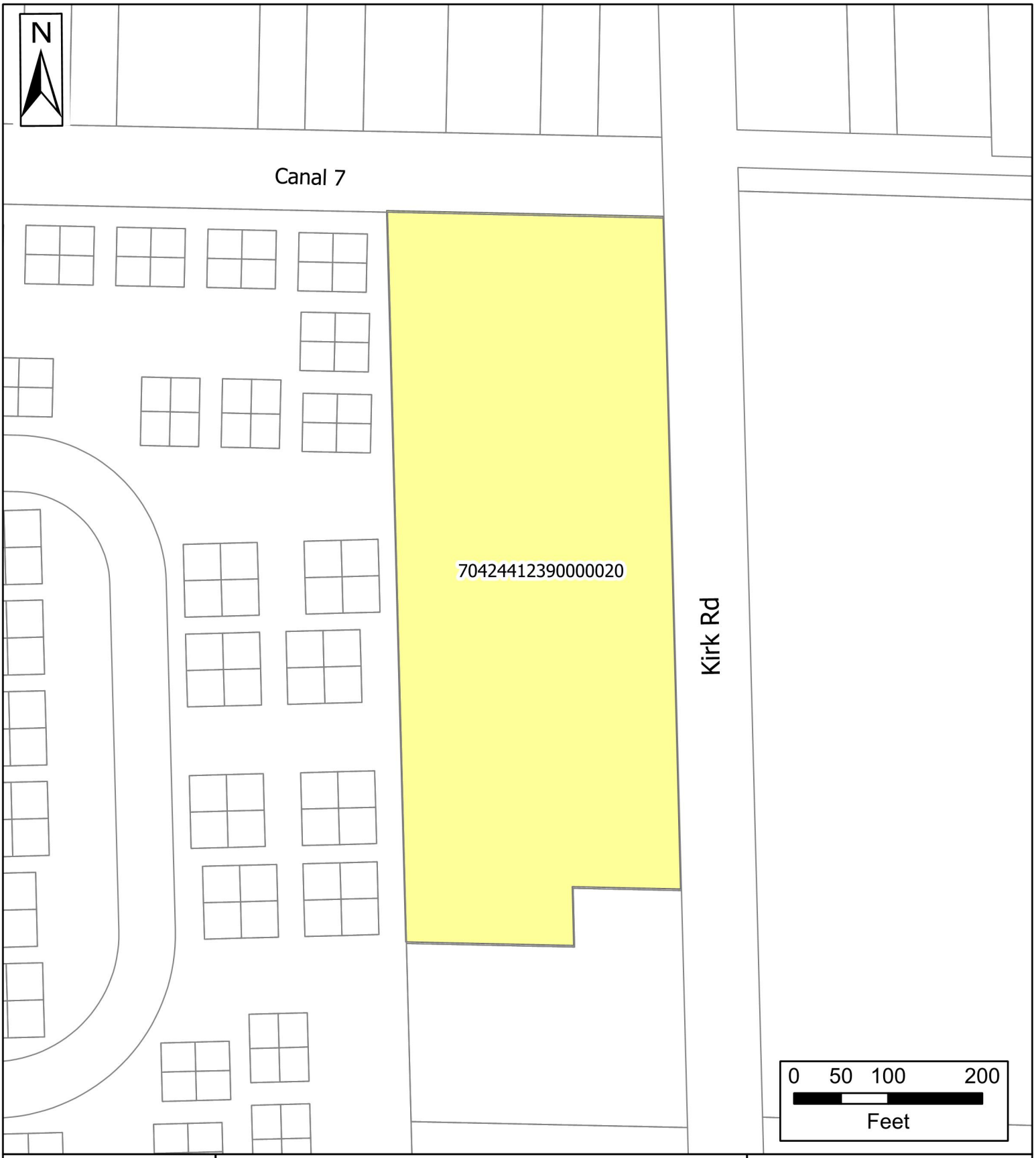

Village of Palm Springs

Kirk Road

Parcels

Property Boundary

The Data is provided "as is" without warranty or any representation of accuracy, timeliness or completeness. The burden for determining accuracy, completeness, timeliness, merchantability and fitness for or the appropriateness for use rests solely on the requester. The Village of Palm Springs make no warranties, express or implied, as to the use of the licensed Data. There are no implied warranties of merchantability or fitness for a particular purpose.The requester acknowledges and accepts the limitations of the Data, including the fact that the Data is dynamic and is in a constant state of maintenance, correction and update.

Data Source: Tax Deed Parcels and Village Limits data provided by the Village of Palm Springs, Parcels provided by Palm Beach County, Basemap provided by ESRI World Imagery.

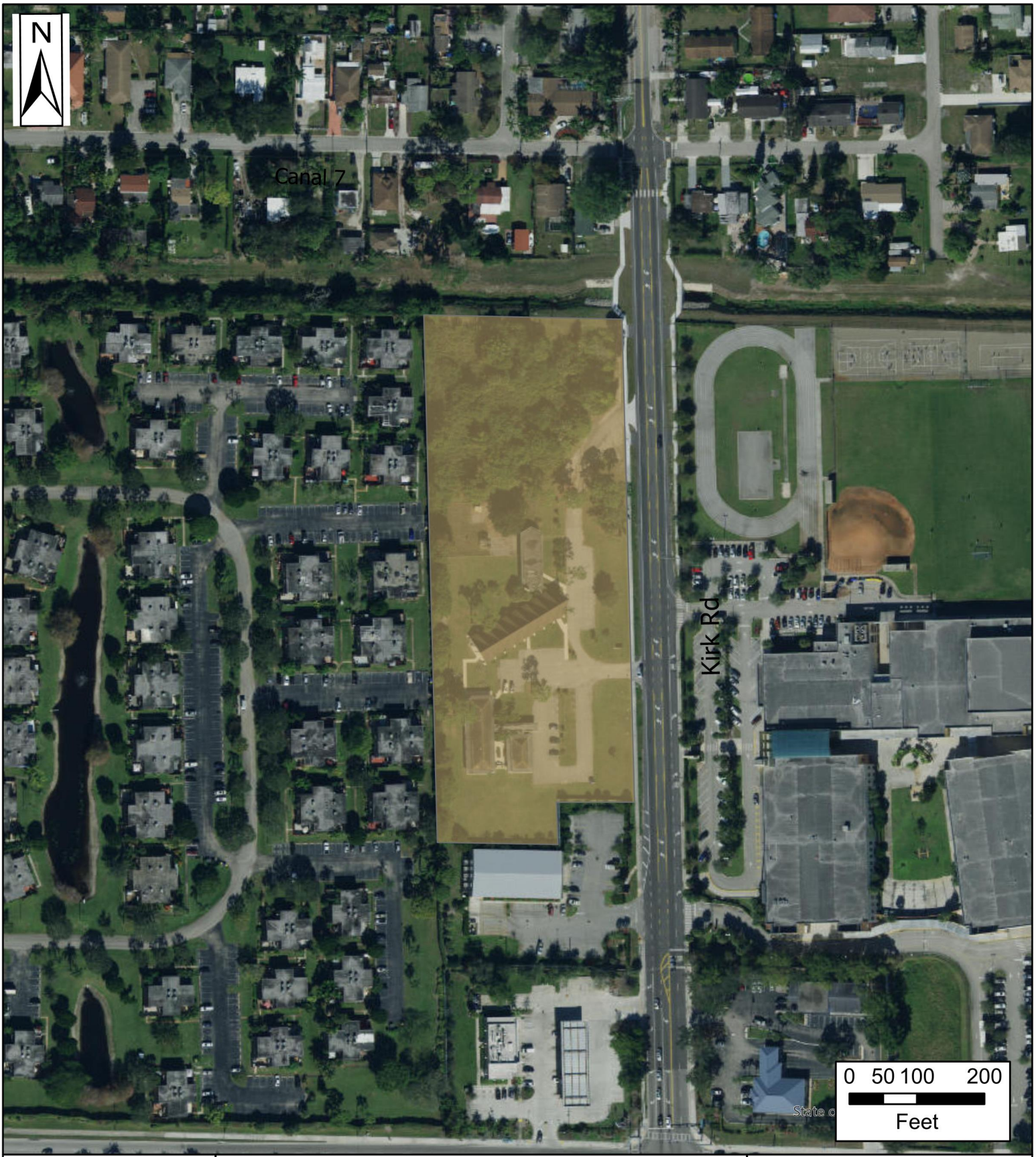

Village of Palm Springs

Kirk Road

Medium Density Residential

The Data is provided "as is" without warranty or any representation of accuracy, timeliness or completeness. The burden for determining accuracy, completeness, timeliness, merchantability and fitness for or the appropriateness for use rests solely on the requester. The Village of Palm Springs make no warranties, express or implied, as to the use of the licensed Data. There are no implied warranties of merchantability or fitness for a particular purpose.The requester acknowledges and accepts the limitations of the Data, including the fact that the Data is dynamic and is in a constant state of maintenance, correction and update.

Data Source: Tax Deed Parcels and Village Limits data provided by the Village of Palm Springs, Parcels provided by Palm Beach County, Basemap provided by ESRI World Imagery.

Village of Palm Springs

Executive Brief

AGENDA DATE: June 9, 2022

DEPARTMENT: Administration

ITEM #19: Ordinance No. 2022-04 - Amendment to the General Employees Pension Plan *(First Reading)*

SUMMARY: The Village General Employees' Pension Plan Board of Trustees requested an actuarial review of the General Employee Pension Plan. Based on their review, several amendments were recommended. Ordinance No. 2022-04 is presented before the Village Council to consider approval of the recommended changes as outlined in the Plan Administrator's letter.

If approved on 1st reading, the proposed ordinance will be considered for 2nd and final reading by the Village Council on July 7, 2022.

FISCAL IMPACT:
The proposed Ordinance No. 2022-04 does not have a fiscal impact on the Village.

ATTACHMENTS:
1. Ordinance No. 2022-04 - Proposed IRS - General Employees' Pension Plan

ORDINANCE NO. 2022-04

(GENERAL EMPLOYEES' PENSION FUND)

AN ORDINANCE OF THE VILLAGE COUNCIL OF THE VILLAGE OF PALM SPRINGS, FLORIDA AMENDING ORDINANCE NO. 2017-26 ADOPTED OCTOBER 12, 2017; AMENDING SECTION 39, IRC QUALIFICATION; AMENDING SECTION 40, REQUIRED DISTRIBUTIONS; PROVIDING FOR SEVERABILITY OF PROVISIONS; PROVIDING FOR PUBLICATION; REPEALING ALL ORDINANCES IN CONFLICT HEREWITH AND PROVIDING AN EFFECTIVE DATE.

WHEREAS, the Village of Palm Springs provides for a pension plan for its general employees;

WHEREAS, changes to the Internal Revenue Code happen quickly and frequently. There is a benefit in authorizing the Board to make appropriate changes to the Plan in order to maintain the Plan's tax qualified status;

WHEREAS, effective January 1, 2020, the Internal Revenue Code was amended by increasing the required minimum distribution age from 70½ to 72;

WHEREAS, to implement the change, it is necessary to amend the Plan; and

WHEREAS, the Village Council has determined it is in the best interest of the Plan and the Village citizens to amend the Plan.

NOW THEREFORE, BE IT ORDAINED BY THE VILLAGE COUNCIL OF THE VILLAGE OF PALM SPRINGS, FLORIDA:

Section 1. The foregoing recitals are adopted herein as true and correct finding of fact and conclusions of law of the Village Council.

Section 2. Section 39, IRC Qualification, of the Plan document is hereby amended as follows:

Section. 39. IRC Qualification.

a. The Village intends the Pension Plan to be a qualified plan under the applicable provisions of Section 401 (a) of the Internal Revenue Code and that the related trust be an exempt organization under Section 5-1 of the Internal Revenue Code. Any provision of this retirement ordinance to the contrary notwithstanding, the Pension Board shall at all times administer the Pension Plan so as to fulfill this intent and to comply with the applicable provisions of Section 415 of the Internal Revenue Code and the corresponding Treasury Regulations applicable to a governmental defined benefit retirement plan. The sum of the defined benefit fraction and the defined contribution fraction, both as defined in Section 415 of the Internal Revenue Code, applicable to a Participant who is also a Participant in a defined contribution plan maintained by the Village shall not exceed 1.0.

b. In recognition of the changing requirements of plan qualification, the Pension Board shall adopt an administrative policy setting forth the nondiscretionary and required provisions for tax qualification, which shall become final only after approval by the Village Council. The administrative policy may be temporarily amended by the Pension Board to reflect nondiscretionary changes to the IRS regulations to maintain the Plan's tax qualification compliance until presented to the Village Council at the next available Council meeting for consideration.

Section 3. Section 40, Required Distributions, of the Plan document is hereby amended as follows:

Section. 40. Required Distributions.

***

b. Any and all benefit payments shall begin by April 1 of the calendar year following the calendar year of the member's retirement date; provided however, all Participants who will reach 70 before December 31, 1999 may, at Participant option, elect to begin benefits on April 1 of the calendar year following the calendar year in which the member attains age ~~70 ½~~ 72, provided the member had not attained age 70 ½ by December 31, 2019.

***

f. If the Participant's death occurs before the distribution of his/her interest in the Plan has commenced, the Participant's entire interest in the Plan shall be distributed within five (5) years of the Participant's death, unless it is to be distributed in accordance with the following rules:

1. The Participant's remaining interest in the Plan is payable to his/her spouse or dependent;
2. The remaining interest is to be distributed over the life of the spouse, issue or dependent or over a period not extending beyond the lite expectancy of the spouse or dependent; and
3. Such distribution begins within one year of the Participant's death unless the Member's spouse, issue or dependent shall receive the remaining interest in which case the distribution need not begin before the date on which the Member would have attained age ~~70 ½~~ 72 and if the spouse, issue or dependent dies before the distribution to the spouse, issue or dependent begins, this Section shall be

applied as if the spouse, issue or dependent were the Plan Participant.

Section 4. Codification. This ordinance shall be codified in the Code of Ordinances of the Village of Palm Springs, Florida.

Section 5. Repeal of Conflicting Ordinances. All ordinances or portions thereof in conflict herewith are hereby repealed to the extent of such conflict.

Section 6. Severability. If any word, clause, sentence, paragraph, section or part thereof contained in this Ordinance is declared to be unconstitutional, unenforceable, void or inoperative by a court of competent jurisdiction, such declaration shall not affect the validity of the remainder of this ordinance.

Section 7. Effective Date. Except as otherwise provided, this Ordinance shall become effective upon adoption.

(THIS SPACE INTENTIONALLY LEFT BLANK)

Council Member _____ offered the foregoing Ordinance, and moved its adoption. The motion was seconded by Council Member _____ and upon being put to a vote, the vote was as follows:

	Aye	Nay	Absent
BEV SMITH, MAYOR	□	□	□
GARY M. READY, VICE MAYOR	□	□	□
DOUG GUNTHER, MAYOR PRO TEM	□	□	□
PATTI WALLER, COUNCIL MEMBER	□	□	□
JONI BRINKMAN, COUNCIL MEMBER	□	□	□

The Mayor thereupon declared the Ordinance duly passed and adopted this _____ day of _____, 2022.

VILLAGE OF PALM SPRINGS, FLORIDA

BY:_____
BEV SMITH, MAYOR

First Reading_____

Second Reading_____

ATTEST:

BY_____
KIMBERLY M. WYNN, VILLAGE CLERK

REVIEWED FOR FORM AND LEGAL SUFFICIENCY

BY:_____
GLEN J. TORCIVIA, VILLAGE ATTORNEY

Village of Palm Springs

Executive Brief

AGENDA DATE: June 9, 2022

DEPARTMENT: Administration

ITEM #20: Ordinance No. 2022-05 - Reapportionment of Council Districts (*First Reading*)

SUMMARY: The Village Charter requires that Council district boundaries be evaluated and reapportioned following the availability of data from the 2020 U.S. Census. New district boundaries should 1) be drawn to create districts of a nearly equal population, 2) be arranged in a logical and compact geographic pattern, 3) promote fair representation, and 4) consider service boundaries of public facilities.

The total village population as of April 1, 2020, was 26,890. According to the Village Charter, the four (4) Village Council districts must be evaluated. The redistricting exercise was conducted with the assumption that the 2020 Census Blocks would be maintained as a whole geographic unit within a single Council district (Census Blocks were not split between districts). Consideration of future population growth based on approved residential projects was included. The redistricting exercise also recognized considerations recommended by the U.S. Census Bureaus:

- Population counts based on the total number of persons, including children, noncitizens, and others not eligible to vote
- No more than 10% deviation (in population count) between the smallest and largest district
- Reasonable contiguity and compactness of each district
- Preserve “communities of interest”.

The Village Charter provides that the new Council district boundaries will supersede previous boundaries at the next regular Village election (March 2023). Further, no Councilmember shall lose their position on the Village Council due to redistricting until the expiration of their term.

Ordinance No. 2022-05 was prepared by the Village Attorney and reviewed by the Assistant Village Manager and Village Clerk.

If approved on 1st reading, the proposed ordinance will be considered for 2nd and final reading by the Village Council on July 7, 2022.

FISCAL IMPACT:

The reapportionment of Council districts does not have a direct fiscal impact on the Village.

ATTACHMENTS:

1. Proposed Ordinance No. 2022-05 - Reapportionment of Council Districts
2. Exhibit "A-1 through A-4" - Legal Descriptions of Proposed Council District Boundaries (Reapportionment - 2020 Census)
3. Exhibit "B" - Voting District Map - Proposed Council District Boundaries - 2020 Census Reapportionment
4. Reapportionment Data Summary - 2020 Census

ORDINANCE NO. 2022-05

AN ORDINANCE OF THE VILLAGE COUNCIL OF THE VILLAGE OF PALM SPRINGS, FLORIDA, ADOPTING REAPPORTIONED VILLAGE COUNCIL DISTRICT BOUNDARIES PURSUANT TO ARTICLE V, SECTION 5.07 OF THE VILLAGE CHARTER; PROVIDING FOR THE USE OF THE VILLAGE COUNCIL DISTRICT BOUNDARIES APPROVED BY THE VILLAGE COUNCIL IN FUTURE ELECTIONS AND COORDINATION WITH THE SUPERVISOR OF ELECTIONS; FILING THE VILLAGE COUNCIL DISTRICT BOUNDARIES WITH THE VILLAGE CLERK'S OFFICE FOR FUTURE INSPECTION AND/OR COPYING; PROVIDING FOR THE REPEAL OF PREVIOUSLY APPROVED VILLAGE COUNCIL DISTRICT BOUNDARIES; PROVIDING FOR FUTURE AMENDMENTS TO THE VILLAGE COUNCIL DISTRICT BOUNDARIES; AND PROVIDING FOR AN EFFECTIVE DATE.

WHEREAS, of the Village of Palm Springs Charter ("Village Charter") requires in Article III, Section 3.01 and Article V, Section 5.07(a) that the Village of Palm Springs ("the Village") be divided into four (4) geographic election districts for purpose of electing a village council member from each district ("Village Council District"); and

WHEREAS, Article V, Section 5.07(b) of the Village Charter requires that the district boundaries be reapportioned based upon the official Florida state and federal census and that the village council shall adopt an ordinance containing the reapportionment within six (6) months of the date of official publication of the most recent official Florida state and federal census, beginning with the 2020 census; and

WHEREAS, Article V, Section 5.07 (b) of the Village Charter requires that the district boundaries shall be reapportioned to create districts of nearly equal population; and

WHEREAS, Article V, Section 5.07(b) of the Village Charter further requires that districts shall be arranged in a logical and compact geographic pattern and shall promote fair representation, with service boundaries of public facilities to be considered; and

WHEREAS, in consultation with the Village's GIS consultants, the Village staff has reviewed the 2020 U.S. decennial census data, and analyzed the existing single member Village Council districts, and

WHEREAS, the Village has determined that it is necessary to reapportion the district boundaries in accordance with the requirements set forth in Article V, Section 5.07 the Village Charter, in order to maintain districts of nearly equal population; and

WHEREAS, the Village staff has developed a proposal to adjust the boundaries of the four Village Council Districts in order to maintain nearly equal population within the districts while satisfying with the requirements of Article V, Section 5.07 Village Charter; and

WHEREAS, the legal descriptions of the proposed reapportioned Village Council District boundaries are attached hereto as Exhibits A-1 (District 1), "A-2 (District 2), "A-3" (District 3), and "A-4" (District 4) and incorporated herein by reference; and

WHEREAS, a map depicting the proposed reapportioned Village Council Districts described in Exhibits "A-1" through "A-4" is attached hereto as Exhibit "B" and incorporated herein by reference; and

WHEREAS, the Village Council has determined that it is in the best interests of the citizens of the Village of Palm Springs to approve and adopt the Village Council District

boundaries attached hereto as Exhibits “A-1”, “A-2”, “A-3” and “A-4” to this ordinance, in accordance with the Village Charter.

NOW, THEREFORE, THE VILLAGE COUNCIL OF THE VILLAGE OF PALM SPRINGS, FLORIDA HEREBY ORDAINS, AS FOLLOWS:

Section 1. Recitals. The foregoing recitals are true and correct and are fully incorporated herein by this reference.

Section 2. Voting District Map. Pursuant to Article V, Section 5.07(b) of the Village Charter, the Village Council hereby finds that the Election District Boundaries as set forth in Exhibits A-1”, “A-2”, “A-3” and “A-4” attached to this Ordinance are in compliance with Article V, Section 5.07(b) of the Village Charter. Therefore, the Village Council hereby approves and adopts said Village Council District boundaries, which are hereby deemed fully incorporated herein by this reference.

Section 3. Future Elections; Coordination with Supervisor of Elections. The Village Council District boundaries approved hereunder shall supersede all previously adopted and approved Village Council district boundaries and shall be used by the Village for all Village Council municipal elections occurring after the effective date of this Ordinance. Upon the adoption of this Ordinance, the Village Clerk is hereby instructed to submit a certified copy of this Ordinance and attached Village Council District boundaries (Exhibits “A-1”, “A-2”, “A-3” and “A-4” to this Ordinance) to the Supervisor of Elections for purposes of implementing the Village Council District boundaries in all municipal elections after the effective date of this Ordinance.

Section 4. Filing of Village Council District Boundaries and Map with Village Clerk. The Village Council District boundaries adopted herein shall not be codified into the Village Charter or Code. However, a copy of the Village Council District boundaries (Exhibits A-1”, “A-2”, “A-3” and “A-4” to this Ordinance) and Map (Exhibit “B” to this

Ordinance) shall remain on file with the Village Clerk's office for public inspection and/or copying and may be posted on the Village's website at the Village Manager's discretion.

Section 5. Repeal of Previously Adopted Village Council District Boundaries. All previously adopted election district maps are hereby repealed and superseded by the Village Council District Boundaries approved pursuant to this Ordinance.

Section 6. Future Amendments to the Village Council District Boundaries. After the next U.S. decennial census in 2030, the Village is required under Article V, Section 5.07 of the Village Charter to adopt an ordinance redistricting election district boundaries as required by law. However, prior to the next decennial census, it may be necessary to re-adjust the election district boundaries on an interim basis under the following conditions:

(A) The Village Manager shall be authorized to re-adjust the Village Council District Boundaries in the event that the Village Council annexes additional land into the Village boundaries. Upon the effective date of the any annexation, the Village Manager is hereby authorized to add the annexed land into the most adjacent and contiguous election district.

(B) The Village Council may re-adjust the election district boundaries to the extent that population demographics produce legal circumstances that warrant redistricting of one or more of the election districts. Such legal circumstances may include, but not be limited to, the election voting districts becoming compromised because they no longer have substantially equal population pursuant to the "one person - one vote" constitutional requirement. If such legal circumstances occur, the Village Manager is authorized and instructed to present the Village Council District Boundaries to the Village Council at a public meeting for consideration and possible interim boundary adjustments. The Village Council may adopt interim boundary adjustments to the extent deemed necessary to satisfy the provisions of the Village Charter.

Section 7. Effective Date. This Ordinance shall become effective immediately upon adoption by the Village Council of the Village of Palm Springs, Florida.

Council Member _____ offered the foregoing Ordinance and moved its adoption. The motion was seconded by Council Member _____, and upon being put to a vote, the vote was as follows:

	Aye	Nay	Absent
BEV SMITH, MAYOR	☐	☐	☐
DOUG GUNTHER, VICE MAYO	☐	☐	☐
JONI BRINKMAN, MAYOR PRO TEM	☐	☐	☐
PATTI WALLER, COUNCIL MEMBER	☐	☐	☐
GARY READY, COUNCIL MEMBER	☐	☐	☐

The Mayor thereupon declared this Ordinance approved and adopted by the Village Council of the Village of Palm Springs, Florida, on second reading, this _____ day of _____, 2022.

VILLAGE OF PALM SPRINGS, FLORIDA

BY: _____

BEV SMITH, MAYOR

First Reading_____

Second Reading_____

ATTEST

BY: _____

KIMBERLY M. WYNN, VILLAGE CLERK

REVIEWED FOR LEGAL FORM AND SUFFICIENCY

BY: _____

GLEN J. TORCIVIA, VILLAGE ATTORNEY

LAND DESCRIPTION BASED ON
THE VILLAGE OF PALM SPRINGS DISTRICTING MAP, DATED 1/05/2021

District 1

A parcel of land lying in Sections 13, 24 and 25, Township 44 South, Range 42 East and in Sections 18 and 19, Township 44 South, Range 43 East, Palm Beach County, Florida, described as follows:

BEGIN at the centerline intersection of Davis Road and Shady Lane Road; thence west, along the centerline of Shady Lane Road, to the centerline of Gulfstream Road; thence south, along the centerline of Gulfstream Road, to the south line of Section 18, Township 44 South, Range 43 East; thence west, along said south line of Section 18, to the northerly extension of the centerline of Reo Lane; thence south, along the centerline of Reo Lane and its northerly extension, to the centerline of 10th Avenue North; thence east, along the centerline of 10TH Avenue North, to the centerline of Gulfstream Road; thence south, along the centerline of Gulfstream Road, to the centerline of Lake Worth Drainage District L-11 Canal; thence west, along the centerline of the L-11 Canal, to the centerline of Kirk Road; thence south, along the centerline of Kirk Road, to the centerline of Lakewood Road; thence west, along the centerline of Lakewood Road, to the centerline of Wisconsin Street; thence south, along the centerline of Wisconsin Street, to the centerline of Lake Worth Road; thence west, along the centerline of Lake Worth Road, to the centerline of Cooley Court; thence south, along the centerline of Cooley Court, to the south right-of-way of Lake Worth Road; thence west, along the south right-of-way of Lake Worth Road, to the east line of said lands described in Official Records Book 31552, Page 238 of the Public Records of Palm Beach County, Florida; thence south, along the east line of said lands described in Official Records Book 31552, Page 238, to the north right-of-way of the Lake Worth Drainage District L-12 Canal; thence west, along the north right-of-way of the Lake Worth Drainage District L-12 Canal, to the west line of said lands described in Official Records Book 31552, Page 238 of the Public Records of Palm Beach County, Florida; thence north, along the west line of said lands described in Official Records Book 31552, Page 238, to the south right-of-way of Lake Worth Road; thence west, along the south right-of-way of Lake Worth Road, to the east line of said lands described in Official Records Book 30707, Page 1892 of the Public Records of Palm Beach County, Florida; thence south, along east line of said lands described in Official Records Book 30707, Page 1892, to the south line of said lands described in Official Records Book 30707, Page 1892; thence west, along the south line of said lands described in Official Records Book 30707, Page 1892 and its westerly extension, to the east line of Block 1, GREEN ACRES PLAT NO. 1, according to the Plat thereof as recorded in Plat Book 12, Page 72 of the Public Records of Palm Beach County, Florida; thence north, along the east line of Block 1, to the south line of Lot 3 of said Block 1, GREEN ACRES PLAT NO. 1; thence west, along the south line of Lot 3, Block 1 and its westerly extension, to the centerline of Urquhart Street; thence south, along the centerline of Urquhart Street, to the easterly extension of the south line of Lot 4, Block 3 of said GREEN ACRES PLAT NO. 1; thence west, along the south line of Lot 4, Block 3 and its easterly and westerly extension, to the west line of Lot 11, Block 3 of said GREEN

ACRES PLAT NO. 1; thence north, along the west line of Lots 11 and 12, of said Block 3, to the south line of Lot 13 of said Block 3; thence west, along the south line of Lot 13, Block 3 and its westerly extension, to the centerline of Price Street; thence south, along the centerline of Price Street, to the centerline of Cross Street; thence west, along the centerline of Cross Street, to the centerline of Military Trail; thence north, along the centerline of Military Trail, to the westerly extension of the north line of Block 12, of PLAT IV, GREENLAND, according to the plat thereof as recorded in Plat Book 4, Page 6 of the Public Records of Palm Beach County, Florida; thence east, along the north line of Block 12 and its westerly extension, to the east line of Lot 11 of said Block 12; thence north, along the northerly extension of the east line of Lot 11, Block 12, to the north line of the Southeast Quarter (SE ¼) of Section 24, Township 44 South, Range 42 East; thence east, along the north line of the Southeast Quarter (SE ¼) of Section 24, to the centerline of Kirk Road; thence north, along the centerline of Kirk Road, to the centerline of 10th Avenue North; thence west, along the centerline of 10th Avenue North, to the centerline of Greene Avenue; thence south, along the centerline of Greene Avenue, to the easterly extension of the south line of the north 100 feet of Lot 28, SUNNY ACRES SUBURBAN HOME SITES NO. 2, according to the Plat thereof as recorded in Plat Book 23, Page 198 of the Public Records of Palm Beach County, Florida; thence westerly, along said easterly extension and along the south line of the north 100 feet of Lots 28 and 29 of said SUNNY ACRES SUBURBAN HOME SITES NO. 2, to the east line of Lot 30 of said SUNNY ACRES SUBURBAN HOME SITES NO. 2; thence south, along the east line of Lot 30, to the south line of Lot 30; thence west, along the south line of Lots 30 and 31 of SUNNY ACRES SUBURBAN HOME SITES NO. 2 and their westerly extension to the centerline of Grace Avenue; thence south, along the centerline of Grace Avenue, to the easterly extension of the south line of Lot 54 of said SUNNY ACRES SUBURBAN HOME SITES NO. 2; thence west along the south line of Lot 54, its easterly and westerly extension, to the centerline of Attleboro Avenue; thence north, along the centerline of Attleboro Avenue, to the easterly extension of the north line of Lot 1137, KENWOOD, according to the Plat thereof as recorded in Plat Book 3, Pages 44 and 45 of the Public Records of Palm Beach County, Florida; thence west, along said easterly extension, along the north line said KENWOOD plat and its westerly extension, to the centerline of Fairway Avenue as shown on said KENWOOD plat; thence south, along the centerline of Fairway Avenue, to the centerline of Weymouth Street; thence west, along the centerline of Weymouth Street, to the centerline of Military Trail; thence north, along the centerline of Military Trail, to the centerline of Marilyn Drive; thence east, along the centerline of Marilyn Drive, to northerly extension of the west line of Lot 49, GRAMMES HOMESITES, according to the Plat thereof as recorded in Plat Book 21, Page 91 of the Public Records of Palm Beach County, Florida; thence south, along the west line of said Lot 49 and its northerly extension, to the south line of said Lot 49; thence east, along the south line of Lots 30 through 49, inclusive of said GRAMMES HOMESITE, to the east line of said Lot 30, said line also being the west line of Lake Worth Memory Gardens; thence north, along said east line of Lot 30 and along the west line of Lake Worth Memory Gardens, to the northeast corner of Lot 17, EVERGREEN ACRES, according to the Plat thereof as recorded in Plat Book 26, Page 43 of the Public Records of Palm Beach County, Florida; thence west, along the north line of said Lot 17 and along the north line of said EVERGREEN ACRES, to the east line of said lands described in Official Records Book

32317, Page 1453 of the Public Records of Palm Beach County, Florida; thence north, along said east line and along the east line and its northerly extension of said lands described in Official Records Book 28359, Page 1881 of the Public Records of Palm Beach County, Florida, to the north line of Section 24, Township 44 South, Range 42 East; thence east, along the north line of Section 24 and along the north line of Section 19, Township 44, Range 43 East, to the southerly extension of the east line of KIRKWOOD SOUTH, according to the Plat thereof as recorded in Plat Book 37, Pages 96 and 97 of the Public Records of Palm Beach County, Florida; thence north, along said southerly extension, along the east line of KIRKWOOD SOUTH and along the east line of KIRKWOOD TOWNHOMES, according to the Plat thereof as recorded in Plat Book 34, Pages 109 and 110 of the Public Records of Palm Beach County, Florida, to the north line of said KIRKWOOD TOWNHOMES; thence west, along the north line of KIRKWOOD TOWNHOMES and its westerly extension, to the centerline of Kirk Road; thence north, along the centerline of Kirk Road, to the easterly extension of the south line of Lot 1, Block F, MILITARY HILL, according to the Plat thereof as recorded in Plat Book 23, Page 21 of the Public Records of Palm Beach County, Florida; thence west, along the easterly extension of south line of Lot 1, along the south line of Lots 1 through 25, and the westerly extension of the south line of Lot 25, all of Block F, of said MILITARY HILL, to centerline of Donald Road; thence south, along the centerline of Donald Road, to the centerline of Park Lane; thence west, along the centerline of Park Lane, to the northerly extension of the east line of said lands described in Official Records Book 20462, Page 1165 of the Public Records of Palm Beach County, Florida; thence south, along said northerly extension and along the east line of said lands described in Official Records Book 20462, Page 1165, to the south line of said lands described in Official Records Book 20462, Page 1165; thence west, along said south line, to the east line of Lot 3, Block 3, DELAWARE MANOR, according to the plat thereof as recorded in Plat Book 21, Page 59 of the Public Records of Palm Beach County, Florida; thence south, along the east line of said Lot 3, Block 3 and its southerly extension, to the centerline of Kent Avenue; thence west, along the centerline of Kent Avenue, to the northerly extension of the east line of Lot 1, Block 2 of said DELAWARE MANOR, according to the plat thereof as recorded in Plat Book 21, Page 59 of the Public Records of Palm Beach County, Florida; thence south, along said northerly extension, along the east line of Lots 1 and 24 and the southerly extension of Lot 24, all of Block 2, of said DELAWARE MANOR, to the centerline of Sussex Avenue; thence west, along the centerline of Sussex Avenue, to the centerline of Military Trail; thence north, along the centerline of Military Trail, to centerline of Vicliff Road; thence east, along the centerline of Vicliff Road, to the northerly extension of the east line of Lot 39, Block B, MILITARY HILL, according to the plat thereof as recorded in Plat Book 23, Page 21 of the Public Records of Palm Beach County, Florida; thence south, along said northerly extension and along the east line of said Lot 39, Block B, to the north line of Lot 19, Block B, of said MILITARY HILL; thence east, along the north line of Lots 19 through 28 and the easterly extension of Lot 28 of said Block B, MILITARY HILL, to the centerline of Donald Road; thence south, along the centerline of Donald Road, to the westerly extension of the north line of said lands described in Official Records Book 20265, Page 465 of the Public Records of Palm Beach County, Florida; thence east, along said westerly extension line, along the north line of said lands described in Official Records Book 20265 Page 465 and its easterly extension, to the northwest corner of Lot

43, Block C, MILITARY HILL, according to the plat thereof as recorded in Plat Book 23, Page 21 of the Public Records of Palm Beach County, Florida; thence east, along the north line of Lots 40 through 43, of said Block C, MILITARY HILL and its easterly extension to the centerline of Kirk Road; thence north, along the centerline of Kirk Road, to the centerline of Vicliff Road; thence west, along the centerline of Vicliff Road, to the southerly extension of the east line of Lot 44, Block D, MILITARY HILL, according to the plat thereof as recorded in Plat Book 23, Page 21 of the Public Records of Palm Beach County, Florida; thence north, along said southerly extension, along the east line of Lots 44, along the east line of Lot 1 and its northerly extension, all of said Block D, MILITARY HILL, to the north right-of-way of Canal L-9 Road; thence west, along the north right-of-way of Canal L-9 Road, to the centerline of Military Trail; thence north, along the centerline of Military Trail, to the centerline of Anna Lane; thence east, along the centerline of Anna Lane, to the southerly extension of the west line of Lot 29, Block 1, ANNA-JOHNS ESTATES, according to the plat thereof as recorded in Plat Book 23, Page 219 of the Public Records of Palm Beach County, Florida; thence north, along said southerly extension and along the west line of said Lot 29, Block 1, to the northwest corner of said Lot 29, Block 1; thence east, along the north line of Lots 29 through 46, Block 1 of said ANNA JOHNS ESTATES, to the southwest corner of Lot 2, Block 1 of said ANNA-JOHNS ESTATES; thence north, along the west line of said Lot 2, Block 1 and its northerly extension, to the centerline of Purdy Lane; thence east, along the centerline of Purdy Lane, to the east right-of-way of Donald Road; thence north, along the east right-of-way of Donald Road and its northerly extension, to the north line of Section 13, Township 44 South, Range 42 East; thence east, along the north line of Section 13, to the centerline of Kirk Road; thence south, along the centerline of Kirk Road, to the easterly extension of the north line of said lands described in Official Records Book 30996, Page 899 of the Public Records of Palm Beach County, Florida; thence west, along said easterly extension and along the north line of said lands described in Official Records Book 30996, Page 899, to the west line of said lands described in Official Records Book 30996, Page 899; thence south, along said west line and its southerly extension, to the centerline of Alemeda Drive (also known as Purdy Lane); thence east, along the centerline of Alemeda Drive, to the centerline of Gulfstream Road; thence south, along the centerline of Gulfstream Road, to the centerline of Cypress Lane; thence east, along the centerline of Cypress Lane, to the centerline of Davis Road; thence south, along the centerline of Davis Road, to the centerline of Shady Lane Road and the POINT OF BEGINNING.

District 2

A parcel of land lying in Sections 12 and 13, Township 44 South, Range 42 East and in Sections 5, 6, 7, 8, and 18, Township 44 South, Range 43 East, Palm Beach County, Florida, described as follows:

BEGIN at the centerline intersection of Davis Road and Alemeda Drive; thence west, along the centerline of Alemeda Drive (also known as Purdy Lane), to the southerly extension of the west line of said lands described in Official Records Book 30996, Page 899 of the Public Records of Palm Beach County, Florida; thence north, along said southerly extension and along the west line of said lands described in Official Records Book 30996, Page 899, to the north line of said lands described in Official Records Book 30996, Page 899; thence east, along the north line and its easterly extension of said lands described in Official Records Book 30996, Page 899 to the centerline of Kirk Road; thence north, along the centerline of Kirk Road, to the north line of Section 13, Township 44 South, Range 42 East; thence west, along the north line of Section 13, to the centerline of Military Trail; thence north, along the centerline of Military Trail, to the centerline of Melaleuca Trail; thence east, along the centerline of Melaleuca Trail, to the northerly extension of the east line of Lot 13, MELALEUCA TRAIL, according to the plat thereof as recorded in Plat Book 23, Page 4 of the Public Records of Palm Beach County, Florida; thence south, along the northerly extension of the east line of said Lot 13 and the east line of Lot 13, to the south line of said MELALEUCA TRAIL; thence east, along the south line of said MELALEUCA TRAIL, to the west line of FOREST LAKES, according to the plat thereof as recorded in Plat Book 37, Pages 125 and 126 of the Public Records of Palm Beach County, Florida; thence south, along the west line of FOREST LAKES and its southerly extension, to the centerline of Forest Hill Boulevard; thence east, along the centerline of Forest Hill Boulevard, to the southerly extension of the east line of FOREST LAKES, according to the plat thereof as recorded in Plat Book 37, Pages 125 and 126 of the Public Records of Palm Beach County, Florida; thence north, along said southerly extension, along the east line of said FOREST LAKES and its northerly extension, to the centerline of the Lake Worth Drainage District L-7 Canal; thence east, along the centerline of the Lake Worth Drainage District L-7 Canal, to the northerly extension of the west line of REPLAT OF ROYAL FOREST TOWNHOUSES, according to the plat thereof as recorded in Plat Book 50, Pages 70 and 71 of the Public Records of Palm Beach County, Florida; thence south, along said northerly extension, along the west line of said REPLAT OF ROYAL FOREST TOWNHOUSES and its southerly extension, to the centerline of Forest Hill Boulevard; thence east, along the centerline of Forest Hill Boulevard, to the southerly extension of the east line of THE WOODS, according to the plat thereof as recorded in Plat Book 30, Page 70 of the Public Records of Palm Beach County, Florida; thence north, along said southerly extension and along the east line of THE WOOD, to the south right-of-way of the Lake Worth Drainage District L-7 Canal; thence east, along the south right-of-way of the Lake Worth Drainage District L-7 Canal, to the west right-of-way of Davis Road; thence south, along the west right-of-way of Davis Road, to the north line of said lands described in Official Records Book 3279, Page 885 of the Public Records of Palm Beach County, Florida; thence west, along said north line, to the west line of said lands described in Official Records Book 3279, Page 885; thence south, along said west

line, to the south line of said lands described in Official Records Book 3279, Page 885; thence east, along said south line and its easterly extension, to the centerline of Davis Road; thence south, along the centerline of Davis Road, to the easterly extension of the north line of said lands described in Official Records Book 29324, Page 413 of the Public Records of Palm Beach County, Florida; thence west, along said easterly extension and along north line of said lands described in Official Records Book 5311, Page 824, to the west line of said lands described in Official Records Book 29324, Page 413; thence south, along said west line of said lands described in Official Records Book 29324, Page 413 and its southerly extension, to the centerline of Forest Hill Boulevard; thence west, along the centerline of Forest Hill Boulevard, to the northerly extension of east right-of-way of Palm Acres Drive; thence south, along said northerly extension and east right-of-way of Palm Acres Drive, to the south line of POINCIANA PROFESSIONAL CENTER, an Office Condominium, recorded in Official Records Book 4712, Page 1459, of the Public Records of Palm Beach County Florida; thence east, along the south line of POINCIANA PROFESSIONAL CENTER and its easterly extension, to the centerline of Tucker Road; thence north, along the centerline of Tucker Road, to the centerline of Forest Hill Boulevard; thence east, along the centerline of Forest Hill Boulevard, to the southerly extension of the west line of said lands described in Official Records Book 32405, Page 189 of the Public Records of Palm Beach County, Florida; thence north, along said southerly extension and along the west line of said lands described in Official Records Book 32405, Page 189, to the north line said lands described in Official Records Book 32405, Page 189; thence east, along the north line said lands described in Official Records Book 32405, Page 189, to the east line of said lands described in Official Records Book 32405, Page 189; thence south, along the east line of said lands described in Official Records Book 32405, Page 189 and its southerly extension, to the centerline of Forest Hill Boulevard; thence east, along the centerline of Forest Hill Boulevard, to the southerly extension of the west line of Tract “A”, CHILDREN’S HOME SOCIETY, MUPD, according to the plat thereof as recorded in Plat Book 97, Pages 49 and 50 of the Public Records of Palm Beach County, Florida; thence north, along said southerly extension and along the west line of Tract “A”, to the north line of said Tract “A”; thence east, along the north line of Tract “A”, to the east line of Tract “B” of said CHILDREN’S HOME SOCIETY, MUPD; thence north, along the east line of Tract “B”, to the south right-of-way line of the Lake Worth Drainage District L-7 Canal; thence east, along the south right-of-way of the Lake Worth Drainage District L-7 Canal, to the southerly extension of the west line of said lands described in Official Records Book 28578, Page 1215, of the Public Records of Palm Beach County Florida; thence north along said southerly extension, along the west line of said lands described in Official Records Book 28578, Page 1215 and its northerly extension, to the centerline of Melaleuca Road; thence east, along the centerline of Melaleuca Road, to the southerly extension of the west line of Lot 9, Block 2, LAGUNA PARK No. 2, according to the Plat thereof as recorded in Plat Book 21, Page 65 of the Public Records of Palm Beach County, Florida; thence north, along said westerly extension and along the west line of Lot 9 of said Block 2, LAGUNA PARK No. 2, to the north line of said Lot 9, Block 2; thence east, along the north line of Lot 9, Block 2, to the west line of Lot 6, Block 2 of said LAGUNA PARK No. 2; thence north, along the west line of Lots 3 through 6, of said Block 2, LAGUNA PARK No. 2, to the north line of said Lot 3, Block 2; thence east, along the north line of Lot 3, Block 2, to the west line of said lands

described in Official Records Book 26623, Page 1677 of the Public Records of Palm Beach County Florida; thence north, along the west line of said lands described in Official Records Book 26623, Page 1677 and its northerly extension, to the centerline of Riddle Road; thence west, along the centerline of Riddle Road, to the southerly extension of the west line of said lands described in Official Records Book 26524, Page 1669, of the Public Records of Palm Beach County, Florida; thence north, along said southerly extension and along the west line of lands described in Official Records Book 26524, Page 1669, to the south line of said lands described in Official Records Book 18204, Page 1439, of the Public Records of Palm Beach County, Florida; thence west, along the south line of said lands described in Official Records Book 18204, Page 1439, to the west line of said lands described in Official Records Book 18204, Page 1439; thence north, along said west line and along the west line of said lands described in Official Records Book 31503, Page 1066, of the Public Records of Palm Beach County, Florida, to the north line of said lands described in Official Records Book 31503, Page 1066; thence east, along the north line of said lands described in Official Records Book 31503, Page 1066 and its easterly extension, to the centerline of Congress Avenue; thence south, along the centerline of Congress Avenue, to the westerly extension of the south line of said lands described in Official Records Book 13474, Page 668, of the Public Records of Palm Beach County, Florida; thence east, along said westerly extension and along the south line of said lands described in Official Records Book 13474, Page 668, to the east line of said lands described in Official Records Book 13474, Page 668; thence north, along the east line of said lands described in Official Records Book 13474, Page 668, to the north line of said lands described in Official Records Book 13474, Page 668; thence west, along the north line of said lands described in Official Records Book 13474, Page 668 and its westerly extension, to the centerline of Congress Avenue; thence north, along the centerline of Congress Avenue, to the easterly extension of the south line said of lands described in Official Records Book 30657, Page 416 of the Public Records of Palm Beach County, Florida; thence west, along said easterly extension and along the south line said of lands described in Official Records Book 30657, Page 416, to the west line of said lands described in Official Records Book 30657, Page 416; thence north, along the west line of said lands described in Official Records Book 30657, Page 416, to the north line of said lands described in Official Records Book 30657, Page 416; thence east, along the north line of said lands described in Official Records Book 30657, Page 416, to the west line of said lands described in Official Records Book 25232, Page 990 of the Public Records of Palm Beach County, Florida; thence north, along west line of said lands described in Official Records Book 25232, Page 990, to the north line of said lands described in Official Records Book 25232, Page 990; thence east, along the north line of said lands described in Official Records Book 25232, Page 990 and its easterly extension, to the centerline of Congress Avenue; thence north, along the centerline of Congress Avenue, to the centerline of Marbill Road; thence east, along the centerline of Marbill Road, to the northerly extension of the east line of Lot 4, Amended Plat of LARSON ADDITION, according to the plat thereof as recorded in Plat Book 24, Page 55 of the Public Records of Palm Beach County, Florida; thence south, along said northerly extension and along the east line of Lot 4, to the north line of Lot 3, Block 1, CONGRESS MEADOWS, according to the plat thereof as recorded in Plat Book 23, Page 140 of the Public Records of Palm Beach County, Florida; thence east, along the north line of said Lot 3, Block 1, to

the east line of said Lot 3, Block 1; thence south, along the east line of Lot 3, Block 1, to the north right-of-way of Holly Road; thence southerly, to the south right-of-way of Holly Road at the east line of Parcel “C”, CIRCUS TRIX CPD, according to the plat thereof as recorded in Plat Book 126, Pages 189 and 190 of the Public Records of Palm Beach County, Florida; thence south, along the east line of Parcel “C”, to a north line of said Parcel “C”; thence east, along said north line of Parcel “C” and the north line of Tract “D” of said CIRCUS TRIX CPD, to the northeast corner of said Tract “D”; thence south, along the east line of Tract “D” and its southerly extension, to the south line of Section 5, Township 44 South, Range 43 East; thence east, along the south line of Section 5, to the northerly extension of the east line of said lands described in Official Records Book 26506, Page 749 of the Public Records of Palm Beach County, Florida; thence south, along said northerly extension, along the east line of said lands described in Official Records Book 26506, Page 749 and its southerly extension, to the centerline of Palmarita Road; thence west, along the centerline of Palmarita Road, to the northerly extension of the west line of said lands described in Official Records Book 30821, Page 171 of the Public Records of Palm Beach County, Florida; thence south, along said northerly extension and along the west line of said lands described in Official Records Book 30821, Page 171, to the north line of said lands described in Official Records Book 31976, Page 1174 of the Public Records of Palm Beach County, Florida; thence east, along north line of said lands described in Official Records Book 31976, Page 1174, to the east line of said lands described in Official Records Book 31976, Page 1174; thence south along the east line, said lands described in Official Records Book 31976, Page 1174, to the south line of said lands described in Official Records Book 31976, Page 1174; thence west, along the south line of said lands described in Official Records Book 31976, Page 1174, to the east line of the west-half of Lot 2A, Block 1, LAGUNA PARK NO. 1, according to the plat thereof as recorded in Plat Book 21, Page 53 of the Public Records of Palm Beach County, Florida; thence south, along said east line of the west-half of Lot 2A, Block 1 and its southerly extension, to the centerline of Oak Drive; thence west, along the centerline of Oak Drive, to the centerline of Congress Avenue; thence south, along the centerline of Congress Avenue, to the westerly extension of the north line of said lands described in Official Records Book 31991, Page 1729 of the Public Records of Palm Beach County, Florida; thence east, along said westerly extension line and the north line of said lands described in Official Records Book 31991, Page 1729, to the east line of said lands described in Official Records Book 31991, Page 1729; thence south, along the east line of said lands described in Official Records Book 31991, Page 1729, to the south line of said lands described in Official Records Book 31991, Page 1729; thence west, along the south line of said lands described in Official Records Book 31991, Page 1729 and its westerly extension, to the centerline of Congress Avenue; thence south, along the centerline of Congress Avenue, to the westerly extension of the north line of Lot 2, Block 3, LAGUNA PARK NO. 1, according to the plat thereof as recorded in Plat Book 21, Page 53 of the Public Records of Palm Beach County, Florida; thence east, along said westerly extension and along the north line of Lot 2, Block 3, to the east line of said Lot 2, Block 3; thence south, along the east line of Lots 2 and 3 of said Block 3, LAGUNA PARK NO. 1, to the north right-of-way of the Lake Worth Drainage District L-7 Canal; thence west, along the north right-of-way of the Lake Worth Drainage District L-7 Canal and its westerly extension, to the centerline of Congress Avenue; thence south, along the centerline of

Congress Avenue, to the centerline of Cherokee Road; thence east, along the centerline of Cherokee Road, to the northerly extension of the east line of Lot 1, Block 2, MEADOW PARK, according to the plat thereof as recorded in Plat Book 22, Page 7 of the Public Records of Palm Beach County, Florida; thence south, along said northerly extension, along the east line of Lots 1, 2 and 3. Block 2, MEADOW PARK, along the southerly extension of the east line of Lot 3, Block 2, along the east line of Lots 1, 2 and 3, Block 3, MEADOWS PARK and along the southerly extension of the east line of said Lot 3, Block 3, to the centerline of Shawnee Road; thence west, along the centerline of Shawnee Road, to the northerly extension of the east line of Lot 1, Block 4, MEADOW PARK according to the plat thereof as recorded in Plat Book 22, Page 7 of the Public Records of Palm Beach County, Florida; thence south, along said northerly extension, along the east line of Lots 1, 2, 3 4, 5 and 6 and the southerly extension of the east line of Lot 6, all of Block 4, of said MEADOW PARK, to the centerline of Forest Hill Boulevard; thence west, along the centerline of Forest Hill Boulevard, to the centerline of Fairview Villas Drive; thence south, along the centerline of Fairview Villas Drive, to the south line of Section 7, Township 44 South, Range 43 East; thence east, along the south line of Section 7, to the centerline of Congress Avenue; thence south, along the centerline of Congress Avenue, to the centerline of Lillian Road; thence west, along the centerline of Lillian Road and the centerline of Bonnie Boulevard, to the centerline of Davis Road; thence south, along the centerline of Davis Road, to the centerline of Alemeda Drive and the POINT OF BEGINNING.

District 3

A parcel of land lying in Sections 7, 8, 17, 18, 19 and 20, Township 44 South, Range 43 East, Palm Beach County, Florida, described as follows:

BEGIN at the centerline intersection of Davis Road and Shady Lane Road; thence north, along the centerline of Davis Road, to the centerline of Cypress Lane; thence west, along the centerline of Cypress Lane, to centerline of Gulfstream Road; thence north, along the centerline of Gulfstream Road, to the centerline of Alemeda Drive; thence east, along the centerline of Alemeda Drive, to the centerline of Davis Road; thence north, along the centerline of Davis Road, to the centerline of Bonnie Boulevard; thence east, along the centerline of Bonnie Boulevard and Lillian Road, to the centerline of Congress Avenue; thence north, along the centerline of Congress Avenue, to the south line of Section 7, Township 44 South, Range 43 East; thence west, along the south line of Section 7, to the centerline of Fairview Villas Drive, thence north, along the centerline of Fairview Villas Drive, to the centerline of Forest Hill Boulevard, thence east, along the centerline of Forest Hill Boulevard, to the centerline of Choctaw Road; thence north, along the centerline of Choctaw Road, to the centerline of Shawnee Road; thence east, along the centerline of Shawnee Road, to the northerly extension of the east line of Lot 1, Block 5, MEADOW PARK, according to the plat thereof as recorded in Plat Book 22, Page 7, of the Public Records of Palm Beach County, Florida; thence south, along said northerly extension and along the east line of said Lot 1, Block 5, to the north line of Lot 7, Block 5 of said MEADOW PARK; thence east, along the north line of Lot 7, Block 5, to the east line of the west one-half (W 1/2) of said Lot 7, Block 5; thence south, along the east line of the west one-half (W 1/2) of Lot 7, Block 5, and its southerly extension, to the centerline of Forest Hill Boulevard; thence east, along the centerline of Forest Hill Boulevard, to the centerline of Prairie Road; thence north, along the centerline of Prairie Road, to the westerly extension of the north line of LAKESHORE PLAZA, according to the plat thereof as recorded in Plat Book 74, Pages 106 and 107, of the Public Records of Palm Beach County, Florida; thence east, along said westerly extension and along north line of LAKESHORE PLAZA, to the east line of said LAKESHORE PLAZA; thence south, along the east line of LAKESHORE PLAZA, to the north right-of-way of Forest Hill Boulevard; thence southerly, to the south right-of-way of Forest Hill Boulevard at its intersection with the east line of said lands described in Official Records Book 12073, Page 556 of the Public Records of Palm Beach County, Florida; thence south, along the east line of said lands described in Official Records Book 12073, Page 556 and along the west line of MEADOW PARK NO. 3, according to the plat thereof as recorded in Plat Book 25, Page 75 of the Public Records of Palm Beach County, Florida, to the centerline of the Lake Worth Drainage District L-8 Canal; thence west, along the centerline of the Lake Worth Drainage District L-8 Canal, to the centerline of Prairie Road; thence south, along the centerline of Prairie Road, to the westerly extension of the north line of Lot 4, BERMUDA PARK, ADDITION NO. 2, according to the plat thereof as recorded in Plat Book 23, Page 134 of the Public Records of Palm Beach County, Florida; thence east, along said westerly extension and along the north line of said Lot 4, to the east line of said Lot 4; thence south, along the east line of Lot 4 and its southerly extension, to the centerline of Mores Road; thence west, along the centerline of Mores Road, to the centerline of Prairie

Road; thence south, along the centerline of Prairie Road, to the centerline of Lark Road, as shown on BERMUDA PARK ADDITION NO. 1, according to the plat thereof, as recorded in Plat Book 21, Page 50, of the Public Records of Palm Beach County, Florida; thence west, along the centerline of Lark Road, to the northerly extension of the west line of Lot 8, Block 5 of said BERMUDA PARK, ADDITION NO. 1; thence south, along said northerly extension and along the west line of said Lot 8, Block 5, to the north right-of-way of the Lake Worth Drainage District L-9 Canal; thence east, along the north right-of-way of the Lake Worth Drainage District L-9 Canal, to the northerly extension of the east line of Tract "B", LAKEWOOD FIRST ADDITION OF PALM SPRINGS, according to the plat thereof, as recorded in Plat Book 33, Pages 25 and 26, of the Public Records of Palm Beach County, Florida; thence southerly, along said northerly extension, along the easterly limits of said Tract "B" and along the northerly and easterly limits of Tract "B", LAKEWOOD OF PALM SPRINGS, according to the plat thereof, as recorded in Plat Book 32, Pages 78 and 79, of the Public Records of Palm Beach County, Florida, and its southerly extension, to the centerline of Arabian Road; thence west, along the centerline Arabian Road, to the centerline of Prairie Road as shown on BANDLOW SUBDIVISION, according to the plat thereof, as recorded in Plat Book 21, Page 92, of the Public Records of Palm Beach County, Florida; thence south, along the centerline of Prairie Road, to the south line of FIRST ADDITION TO BANDLOW SUBDIVISION, according to the plat thereof as recorded in Plat Book 23, Page 207 of the Public Records of Palm Beach County, Florida; thence west, along the south line of said FIRST ADDITION TO BANDLOW SUBDIVISION, to the east line of the Southwest One-quarter (SW 1/4) of the Southwest One-quarter (SW 1/4) of the Southwest One-quarter (SW 1/4) of Section 17, Township 44 South, Range 43 East; thence south, along said east line, to the south line of Section 17, Township 44 South, Range 43 East; thence east, along the south line of Section 17, to the northerly extension of the west line of said lands described in Official Records Book 26978, Page 1233, of the Public Records of Palm Beach County, Florida; thence south, along said northerly extension and along the west line of said lands described in Official Records Book 26978, Page 1233; Official Records Book 25572, Page 1626; Official Records Book 24910, Page 390; Official Records Book 7043, Page 102; Official Records Book 31296, Page 1616; Official Records Book 2329, Page 440; Official Records Book 31775, Page 74 and Official Records Book 24988, Page 14, all of the Public Records of Palm Beach County, Florida, to the south line of said lands described in Official Records Book 24988, Page 14 of the Public Records of Palm Beach County, Florida; thence east, along said south line and its easterly extension, to the centerline of Florida Mango Road; thence south, along the centerline of Florida Mango Road, to the centerline of 10th Avenue North; thence west, along the centerline of 10th Avenue North, to the northerly extension of the east line of lands described in Official Records Book 14392, Page 910 of the Public Records of Palm Beach County, Florida; thence south, along said northerly extension and along the east line of said lands described in Official Records Book 14392, Page 910, to the south line of said lands described in Official Records Book 14392, Page 910; thence westerly, along the south line of said lands described in Official Records Book 14392, Page 910 and its westerly extension, to the centerline of Lynnwood Drive; thence north, along the centerline of Lynnwood Drive, to the centerline of 10th Avenue North; thence west, along the centerline of 10th Avenue North, to the northerly extension of the east line of said lands described in Official Records Book 31458, Page

404 of the Public Records of Palm Beach County, Florida; thence south, along said northerly extension and along the east line of said lands described in Official Records Book 31458, Page 404, to the south line of said lands described in Official Records Book 31458, Page 404; thence westerly, along the southerly limits of said lands described in Official Records Book 31458, Page 404 and its westerly extension, to the centerline of Rudolph Road; thence north, along the centerline of Rudolph Road, to the centerline of 10th Avenue North; thence west, along the centerline of 10th Avenue North, to the northerly extension of the east line of Lot 27, HI-PINE HOMESITES, according to the plat thereof, as recorded in Plat Book 23, Page 22 of the Public Records of Palm Beach County, Florida; thence south, along said northerly extension and along the east line of Lots 27 and 28 of said HI-PINE HOMESITES, to the south line of said Lot 28; thence west, along the south line of Lot 28 and its westerly extension, to the centerline of Hi Street; thence north, along the centerline of Hi Street, to the centerline of 10th Avenue North; thence west, along the north right-of Way of 10th Avenue North, to the northerly extension of the east line of said lands described in Official Records Book 31911, Page 957 of the Public Records of Palm Beach County, Florida; thence south, along said northerly extension and along the east line of said lands described in Official Records Book 31911, Page 957, to the south line of said lands described in Official Records Book 31911, Page 957; thence west, along the south line of said lands described in Official Records Book 31911, Page 957 and its westerly extension, to the centerline of Summer Street; thence south, along the centerline of Summer Street, to the easterly extension of south line of Lot 73, HI-PINE HOMESITES PLAT NO. 2, according to the Plat thereof as recorded in Plat Book 23, Page 38 of the Public Records of Palm Beach County, Florida; thence west, along said easterly extension and along the south line of Lot 73, to the west line of said plat HI-PINE HOMESITES PLAT NO. 2; thence south, along the west line of HI-PINE HOMESITES PLAT NO. 2, along the east line of Tract 46 and its southerly extension, MODEL LAND COMPANY SUBDIVISION OF SECTION 20, TOWNSHIP 44 SOUTH, RANGE 42 EAST, according to the plat thereof as recorded in Plat Book 5, Page 79 of the Public Records of Palm Beach County, Florida, to the centerline of the Lake Worth Drainage District L-11 Canal; thence west, along the centerline of the Lake Worth Drainage District L-11 Canal, to the centerline of Davis Road; thence north, along the centerline of Davis Road, to the centerline of 10th Avenue North; thence east, along the centerline of 10th Avenue North, to the centerline of Henthorne Drive; thence north, along the centerline of Henthorne Drive, to the centerline of Greenbrier Drive; thence westerly, along the centerline of Greenbrier Drive, to the centerline of Davis Road; thence north, along the centerline of Davis Road, to the centerline of Shady Lane Road and the POINT OF BEGINNING.

District 4

A parcel of land lying in Sections 24 and 25, Township 44 South, Range 42 East and Sections 18, 19, 20, 29 and 30, Township 44 South, Range 43 East, Palm Beach County, Florida, described as follows:

BEGIN at the centerline intersection of Davis Road and Shady Lane Road; thence south, along the centerline of Davis Road, to the centerline of Greenbrier Drive; thence easterly, along the centerline of Greenbrier Drive, to the centerline of Henthorne Drive; thence south, along the centerline of Henthorne Drive, to the centerline of 10th Avenue North; thence west, along the centerline of 10th Avenue North, to the centerline of Davis Road; thence south, along the centerline of Davis Road to the centerline of the Lake Worth Drainage District L-11 Canal; thence east, along the centerline of the Lake Worth Drainage District L-11 Canal, to the centerline of Congress Avenue; thence south, along the centerline of Congress Avenue, to the westerly extension of the north line of Tract 103, MODEL LAND COMPANY'S SUBDIVISION OF SECTION 20, TOWNSHIP 44 SOUTH, RANGE 43 EAST, according to the plat thereof as recorded in Plat Book 5, Page 79 of the Public Records of Palm Beach County, Florida; thence east, along said westerly extension and along the north line of Tract 103, to the east line of said Tract 103; thence south, along the east line of Tract 103 and its southerly extension, to centerline of 2nd Avenue North; thence east, along the centerline of 2nd Avenue North, to the southerly extension of the east line of Block 19, ENGLEWOOD MANOR, according to the plat thereof as recorded in Plat Book 24, Page 52 of the Public Records of Palm Beach County, Florida; thence north, along said southerly extension and along the east line of said Block 19, ENGLEWOOD, to the south line of that 30 foot alley shown on said ENGLEWOOD plat; thence east, along the south line of said 30 foot alley, to the west right-of-way of the Lake Worth Drainage District E-4 Canal; thence south, along the west right-of-way of the Lake Worth Drainage District E-4 Canal, to the south line of Section 20, Township 44 South, Range 43 East; thence west, along the south line of Section 20, to the east line of Section 30, Township 44 South, Range 43 East; thence south, along the east line of Section 30, to the centerline of 6th Avenue South, also known as Melaleuca Lane; thence east, along the centerline of 6th Avenue South, to the northerly extension of the east line of said lands described in Official Records Book 1656, Page 1292, of the Public Records of Palm Beach County, Florida; thence south, along said northerly extension and along the east line of said lands described in Official Records Book 1656, Page 1292, to the south line of said lands described in Official Records Book 1656, Page 1292; thence west, along the south line of said lands described in Official Records Book 1656, Page 1292 and its westerly extension, to the east line of Section 30, Township 44 South, Range 43 East; thence south, along the east line of Section 30, to the easterly extension of the south line of said lands described in Official Records Book 26420, Page 112, of the Public Records of Palm Beach County, Florida; thence west, along said easterly extension and along the south line of said lands described in Official Records Book 26420, Page 112, to the west line of said lands described in Official Records Book 26420, Page 112; thence north, along the west line of said lands described in Official Records Book 26420, Page 112; thence north, along the west line of said lands described in Official Records Book 33332, Page 1276, of the Public Records of Palm Beach County,

Florida and its northerly extension, to the centerline of Prince Drive; thence west, along the centerline of Prince Drive, to the southerly extension of the west line of said lands described in Official Records Book 32422, Page 868, of the Public Records of Palm Beach County, Florida; thence north, along said southerly extension and along the west line of said lands described in Official Records Book 32422, Page 868, to a south line of said lands described in Official Records Book 32422, Page 868; thence west, along the south line of said lands described in Official Records Book 32422, Page 868 and its westerly extension, to the centerline of Paetzold Drive; thence north, along the centerline of Paetzold Drive, to the centerline of Ferrell Drive; thence east, along the centerline of Ferrell Drive, to the southerly extension of the west line of Lot B, Block 97, PALM BEACH FARMS CO. PLAT NO. 7, according to the plat thereof as recorded in Plat Book 5, Page 72 of the Public Records of Palm Beach County, Florida; thence north, along said southerly extension and along the west line of Lot B, Lot A, Block 97 of said PALM BEACH FARMS CO. PLAT NO. 7, to the north right-of-way of Roberts Lane; thence north, to the north right-of-way of Roberts Lane at the east line of CONGRESS PARK, according to the plat thereof as recorded in Plat Book 73, Pages 142 and 143 of the Public Records of Palm Beach County, Florida; thence north, along the east line of CONGRESS PARK, to the north line of CONGRESS PARK; thence westerly along the northerly limits of CONGRESS PARK and its westerly extension, to the centerline of Melaleuca Lane; thence southwesterly, along the centerline of Melaleuca Lane, to the southerly extension of the west line of said lands described in Official Records Book 23007, Page 507, of the Public Records of Palm Beach County, Florida; thence north, along said southerly extension and along the westerly limits of said lands described in Official Records Book 23007, Page 507, to the northeast corner of Lot B, Block 72, PALM BEACH FARMS CO. PLAT NO. 7, according to the plat thereof as recorded in Plat Book 5, Page 72 of the Public Records of Palm Beach County, Florida; thence west, along the north line of Lot B, Block 72 and its westerly extension, to the centerline of Davis Road; thence north, along the centerline of Davis Road, to the south right-of-way of the Lake Worth Drainage District L-13 Canal; thence east, along the south right-of-way of the Lake Worth Drainage District L-13 Canal, to the southerly extension of the east line of said lands described in Official Records Book 25505, Page 1331, of the Public Records of Palm Beach County, Florida; thence north, along said southerly extension, to the north right-of-way of the Lake Worth Drainage District L-13 Canal; thence west, along the north right-of-way of the Lake Worth Drainage District L-13 Canal, to the west line of said lands described in Official Records Book 25505, Page 1331, of the Public Records of Palm Beach County, Florida; thence north, along the west line of said lands described in Official Records Book 25505, Page 1331, to the north line of said lands described in Official Records Book 25505, Page 1331; thence east, along the north line of said lands described in Official Records Book 25505, Page 1331, to the west line of said lands described in Official Records Book 25505, Page 1331; thence north, along the west line of said lands described in Official Records Book 25505, Page 1331 and along the west line of Lot D, Block 34, PALM BEACH FARMS CO. PLAT NO. 7, according to the plat thereof as recorded in Plat Book 5, Page 72 of the Public Records of Palm Beach County, Florida, to the north line of said Lot D, Block 34; thence east, along the north line of said Lot D, Block 34, to the west line of Lot C, Block 33 of said PALM BEACH FARMS CO. PLAT NO. 7; thence north, along the west line of Lots A, B and C, Block 33 of said PALM BEACH FARMS CO. PLAT NO. 7, to the south line of

Lot E, Block 31 of said PALM BEACH FARMS CO. PLAT NO. 7; thence west, along the south line of said Lot E, Block 31, to the west line of said Block 31; thence north, along the west line of Block 31, to the easterly extension of the south line of Lot A, Block 30 of said PALM BEACH FARMS CO. PLAT NO. 7; thence west, along said easterly extension and along the south line of Lot A, Block 30, to the southerly right-of-way of the Lake Worth Drainage District L-12 Canal; thence southwesterly, along said southerly right-of-way, to the southerly extension of the west line of said lands described in Official Records Book 27251, Page 1933, of the Public Records of Palm Beach County, Florida; thence north, along said southerly extension, along the westerly limits of said lands described in Official Records Book 27251, Page 1933 and along the westerly limits of said lands described in Official Records Book 27341, Page 1368, of the Public Records of Palm Beach County, Florida, to the easterly extension of the south line of said lands described in Official Records Book 4393, Page 846, of the Public Records of Palm Beach County, Florida; thence west, along said easterly extension, along the south line of said lands described in Official Records Book 4393, Page 846 and its westerly extension, to the centerline of Mar Mak Drive; thence south, along the centerline of Mar Mak Drive, to the easterly extension of the south line of said lands described in Official Records Book 10219, Page 803, of the Public Records of Palm Beach County, Florida; thence west, along said easterly extension, along the south line of said lands described in Official Records Book 10219, Page 803, and its westerly extension, to the east line of Block 7 of said PALM BEACH FARMS CO. PLAT NO. 7, according to the plat thereof as recorded in Plat Book 5, Page 72 of the Public Records of Palm Beach County, Florida; thence south, along the east line of Block 7 and the east line of Block 26 of said PALM BEACH FARMS CO. PLAT NO. 7, to the southeast corner of Lot C of said Block 26; thence west, along the south line of said Lot C, Block 26 and along the south line of Lot C, Block 25 of said PALM BEACH FARMS CO. PLAT NO. 7, to the east right-of-way of Davis Road; thence north, along the east right-of-way of Davis Road, to the easterly extension of the south line of Tract F, FONTANA TOWNHOMES, according to the Plat thereof as recorded in Plat Book 133 Pages 15 and 16 of the Public Records of Palm Beach County, Florida; thence west, along the easterly extension of said south line of Tract F and along the south line of Tract F, to a east line of said Tract F, FONTANA TOWNHOMES; thence south, along the east line of Tract F, to the north right-of-way of the Lake Worth Drainage District L-12 Canal; thence west, along the north right-of-way of the Lake Worth Drainage District L-12 Canal to the centerline of Coconut Road; thence north, along the centerline of Coconut Road to the centerline of Lake Worth Road; thence west, along the centerline of Lake Worth Road, to the centerline of Gulfstream Road; thence south, along the centerline of Gulfstream Road, to the easterly extension of the south line of said lands described in Official Records Book 32951, Page 979, of the Public Records of Palm Beach County, Florida; thence west, along said easterly extension and along the south line of said lands described in Official Records Book 32951, Page 979, to the east line of said lands described in Official Records Book 31141, Page 447, of the Public Records of Palm Beach County, Florida; thence south, along the east line of said lands described in Official Records Book 31141, Page 447, to the north right-of-way of the Lake Worth Drainage District L-12 Canal; thence west, along the north right-of-way of the Lake Worth Drainage District L-12 Canal, to the west line of said lands described in Official Records Book 31141, Page 447, of the Public Records of Palm Beach County, Florida; thence north,

along the west line of said lands described in Official Records Book 31141, Page 447, to the south right-of-way of Lake Worth Road; thence west, along the south right-of-way Lake Worth Road, to the centerline of Foss Road; thence south, along the centerline of Foss Road, to the easterly extension of the south line of Lot 7, FOSS SUBDIVISION, according to the Plat thereof as recorded in Plat Book 24 Page 137of the Public Records of Palm Beach County, Florida; thence west, along said easterly extension, along the south line of Lot 7 and its westerly extension, to the centerline of Herbertz Road; thence south, along the centerline of Herbertz Road, to the easterly extension of the south line of said lands described in Official Records Book 25162, Page 175, of the Public Records of Palm Beach County, Florida; thence west, along said easterly extension and along the south line of said lands described in Official Records Book 25162, Page 175, to the west line of said lands described in Official Records Book 25162, Page 175; thence north, along the west line of said lands described in Official Records Book 25162, Page 175, to the south right-of-way of Lake Worth Road; thence west, along the south right-of-way of Lake Worth Road to the centerline of Kirk Road; thence south, along the centerline of Kirk Road, to the north right-of-way of the Lake Worth Drainage District L-12 Canal; thence west, along the north right-of-way of the Lake Worth Drainage District L-12 Canal, to the west line of said lands described in Official Records Book 27513, Page 896, of the Public Records of Palm Beach County, Florida; thence north, along the west line of said lands described in Official Records Book 27513, Page 896, to a south line of said lands described in Official Records Book 27513, Page 896; thence west, along the south line of said lands described in Official Records Book 27513, Page 896 and its westerly extension, to the centerline of Cooley Court; thence north, along the centerline of Cooley Court, to the centerline of Lake Worth Road; thence east, along the centerline of Lake Worth Road, to the centerline of Wisconsin Street; thence north, along the centerline of Wisconsin Street, to the centerline of Lake Wood Road; thence east, along the centerline of Lake Wood Road, to the centerline of Kirk Road; thence north, along the centerline of Kirk Road, to the centerline of the Lake Worth Drainage District L-11 Canal; thence east, along the centerline of the Lake Worth Drainage District L-11 Canal, to the centerline of Gulfstream Road; thence north, along the centerline of Gulfstream Road, to the centerline of 10th Avenue North; thence west, along the centerline of 10th Avenue North, to the centerline of Reo Lane; thence north, along the centerline of Reo Lane and its northerly extension, to the south line of Section 18, Township 44 South, Range 43 East; thence east, along the south line of Section 18, Township 44 South, Range 43 East, to the centerline of Gulfstream Road; thence north, along the centerline of Gulfstream Road to the centerline of Shady Lane; thence east, along the centerline of Shady Lane, to the centerline of Davis Road and the POINT OF BEGINNING.

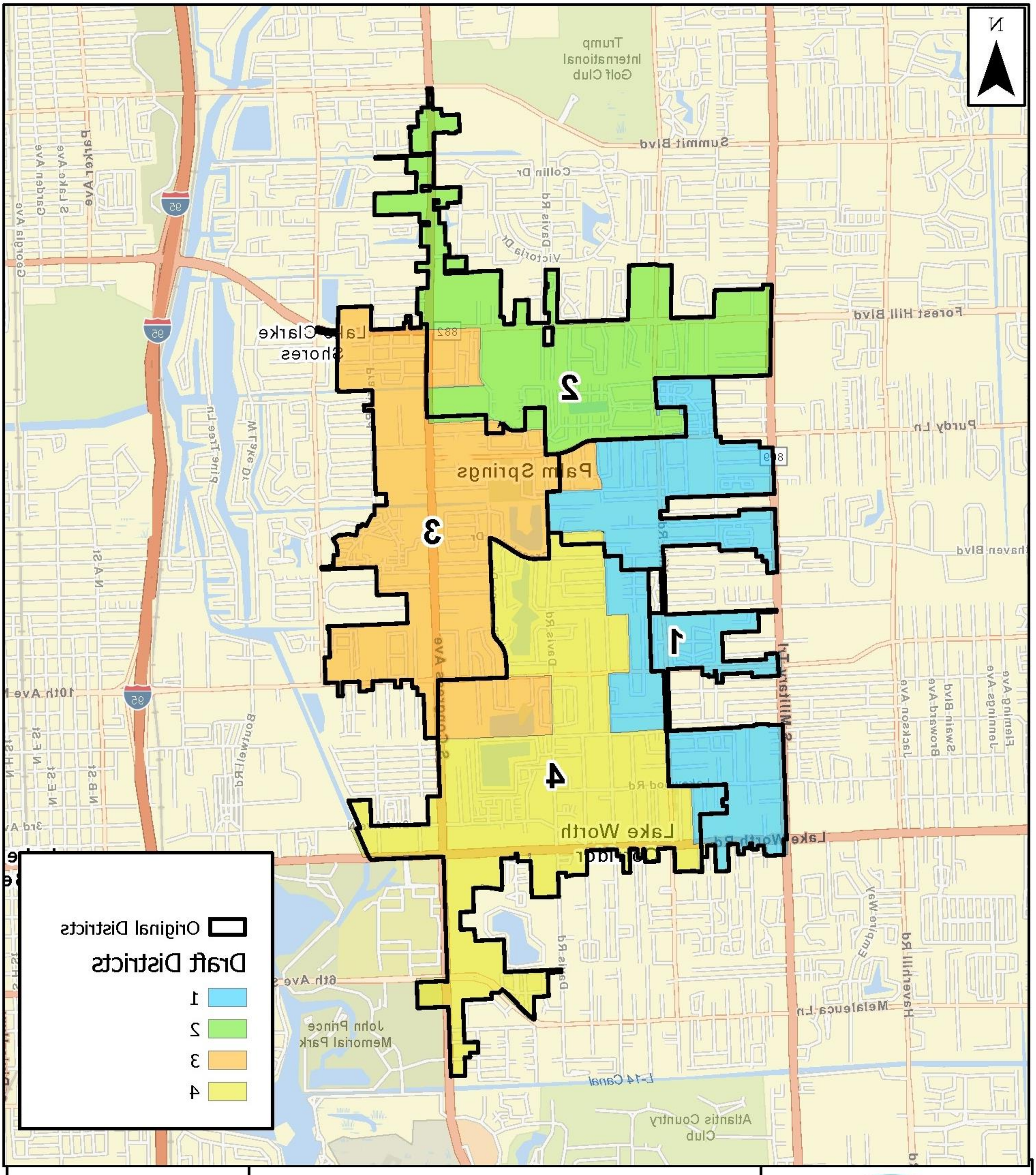

Village of Palm Springs

Draft Districts 01/05/2021

The Data is provided "as is" without warranty or any representation of accuracy, timeliness or completeness. The burden for determining accuracy, completeness, timeliness, merchantability and fitness for or the appropriateness for use rests solely on the requester. The Village of Palm Springs make no warranties, express or implied, as to the use of the licensed Data. There are no implied warranties of merchantability or fitness for a particular purpose. The requester acknowledges and accepts the limitations of the Data, including the fact that the Data is dynamic and is in a constant state of maintenance, correction and update

Reapportionment Data Summary

DISTRICT		Census Block Sums	% of Census Blocks	Future Project Residents	New total population (Census + new projects)	Hispanic Ethnicity (2020 Census)	% Hispanic in District
1		6874	26%	507	7381	4629	67%
2		6086	23%	1047	7133	3451	57%
3		7312	27%	72	7384	4350	59%
4		6618	25%	453	7071	3769	57%
		26890	**residents**		**28969**		

Village of Palm Springs

Executive Brief

AGENDA DATE: June 9, 2022

DEPARTMENT: Administration

ITEM #21: Ordinance No. 2022-06 - Village Code Amendment - Chapter 2 - Lien Reductions (*First Reading*)

SUMMARY: Administration requests an amendment to the Village Code - Chapter 2, Administration, Article III Code Enforcement, Sections 2-237 and 2-238, pertaining to the process for lien reductions.

At this time, daily fines assessed by order of the special magistrate may accrue with no cap. Extreme lien balances that far exceed the value of a property may deter compliance because the property owner or contract purchaser cannot afford to satisfy the lien. Village staff desires to facilitate compliance with properties, and propose changes to the lien reduction process that might entice compliance. The proposed ordinance establishes the following:

- Cap liens to 250% of the appraised value of the property
- Allows documented expenses incurred bringing a property into compliance to be considered in fine reductions
- Allows the Village Manager to negotiate a stipulated agreement to bring homesteaded properties into compliance

Ordinance No. 2022-06 was prepared by the Village Attorney and reviewed by the Village Manager, Assistant Village Manager, Village Clerk, and Police Department Support Services Supervisor.

If approved on first reading, the proposed ordinance will be considered for 2nd and final reading by the Village Council on July 7, 2022.

FISCAL IMPACT:
The objective of code enforcement is compliance with Village Codes, not collection of fines. The proposed ordinance may reduce overall liens on record, but result in greater levels of compliance.

ATTACHMENTS:
1. Ordinance No. 2022-06 Amending Chapter 2 - Lien Reduction

ORDINANCE NO. 2022-06

AN ORDINANCE OF THE VILLAGE COUNCIL OF THE VILLAGE OF PALM SPRINGS, FLORIDA, AMENDING CHAPTER 2 "ADMINISTRATION", ARTICLE III, "CODE ENFORCEMENT", PROVIDING FOR DAILY FINES TO BE CAPPED UPON APPLICATION FOR LIEN REDUCTION BY THE SPECIAL MAGISTRATE; AUTHORIZING THE VILLAGE MANAGER TO ENTER INTO STIPULATED AGREEMENTS REDUCING FINES FOR RESIDENTIAL HOMESTEAD PROPERTIES; PROVIDING FOR SEVERABILITY; PROVIDING FOR THE REPEAL OF LAWS IN CONFLICT; PROVIDING FOR CODIFICATION; AND PROVIDING FOR AN EFFECTIVE DATE

WHEREAS, the Village of Palm Springs, Florida (the "Village") is a duly constituted municipality having such power and authority conferred upon it by the Florida Constitution and Chapter 166, Florida Statutes; and

WHEREAS, pursuant to Chapter 162, Florida Statutes, the Village Council of the Village of Palm Springs has the power to execute a release or satisfaction of a Code enforcement lien; and

WHEREAS, the Village Council has delegated certain lien reduction authority to the Special Magistrate in Village Code Section 2-237; and has also delegated certain lien reduction authority to the Village Manager in Code Section 2-238; and

WHEREAS, Section 2-237 forth the procedures for lien reductions by the Special Magistrate, which prohibit the reduction of a code enforcement lien below ten (10) per cent of the lien amount; and

WHEREAS, daily accruing code enforcement fines that remain unpaid over a period of years often result in liens that are many times the fair market value of the subject property; and

WHEREAS, the Village recognizes that code enforcement fines are an important tool for enforcing compliance with property maintenance codes in the Village, in order to preserve the quality of life and protect property values in the Village; and

WHEREAS, code enforcement liens that far exceed the value of the property provide a disincentive to bringing the property into compliance and hinder the sale of the property for redevelopment; and

WHEREAS, the Village recognizes that daily accruing code enforcement liens should remain commensurate with the value of the subject property; and

WHEREAS, code enforcement liens on residential homestead properties are not subject to foreclosure, which lessens the owners' incentive to bring the property into compliance and hinders enforcement; and

WHEREAS, the Village desires to provide an incentive for owners of their residential homestead properties to bring their properties into compliance with the code; and

WHEREAS, the Village desires to provide a process by which such unenforceable liens may be released in order to obtain the compliance of the property; and

WHEREAS, the Village Council has reviewed the recommended amendments and has determined that they serve a valid public purpose and are in the best interest of the public health, safety and general welfare of the Village and its residents.

NOW, THEREFORE, THE VILLAGE COUNCIL OF THE VILLAGE OF PALM SPRINGS, FLORIDA HEREBY ORDAINS, AS FOLLOWS:

Section 1. . Recitals. The foregoing recitals are hereby affirmed and ratified as if fully set forth herein.

Section 2. Chapter 2 "Administration," Article III, "Code Enforcement," Section 2-237, "Lien Reductions," shall be amended to read as follows (words ~~stricken~~ are deletions; words underlined are additions):

Sec. 2-237. - Lien reductions.

(a) Once a lien has been imposed under this article, a violator, or the property owner ("petitioner") may submit a written petition to the Village Clerk to request a lien reduction hearing before the special magistrate. The reduction hearing will be limited solely to the issue of whether the lien assessed should be reduced and the hearing shall not be a hearing de novo of the original case. The burden of proof will be on the violator or property owner to show cause for reducing the lien.

(b) The petition must be submitted to the Village Clerk on the form provided by the Village and the nonrefundable petition fee paid to the Village.

(c) If the following criteria are satisfied, the petition will be set for a hearing before the Special Magistrate.

(1) If the violation concerned real property, the real property in question must ~~follow~~ be in compliance with the Village Code ~~and~~ of Ordinances and an Affidavit of Compliance must be issued for the real property.
(2) If the violation concerned a matter not directly related to real property, an Affidavit of Compliance must be issued for the violation.
(3) All real property owned by the petitioner in the Village must be in compliance with the Village Code ~~and~~ of Ordinances and not the subject of another code enforcement case or nuisance abatement case or be posted as unsafe by the Building Official.
(4) The petitioner must not have any overdue or delinquent accounts with the Village including, but not limited to, taxes, administrative costs or citation fees and fines.

If the above criteria are not satisfied, the petition will be denied and notice of denial will be sent to the petitioner by regular U.S. mail to the address provided on the petition.

(d) If a hearing for lien reduction is set, a notice of the hearing will be sent by regular U.S. mail to the address provided on the petition at least five days prior to hearing date.

(e) Upon the filing of a fully completed application for a lien reduction, the total amount of the daily fine(s) authorized in each lien imposed upon the property pursuant to this chapter shall be capped at no more than two hundred fifty (250) percent of the appraised value of the property. The appraised value of the property shall be determined by the Palm Beach County Property Appraiser's appraised "total market value" established for the property the year the application is submitted or the year prior if the current year has not yet been established. Any lien reduction made pursuant to this section shall not be applicable to any administrative costs or citation fines or fees assessed at any prior hearing.

~~(e) The special magistrate at a lien reduction hearing shall make one of the following determinations: The lien may be reduced to a specified amount, or the request for lien reduction denied. The special magistrate shall not reduce any lien to less than ten percent of the remaining outstanding lien.~~

(f) ~~Any lien reduction made pursuant to this section is not applicable to any administrative costs or citation fines or fees assessed at any prior hearing~~. In determining how much to reduce the outstanding lien, the Special Magistrate shall consider the following factors:

(1) The gravity of the violation;

(2) Any action taken by the violator to correct the violation;

(3) Any previous violations committed by the violator; and

(4) Any other matter suggesting that the lien reduction is in the best interests of the Village.

(~~f~~g) In determining how much to reduce the outstanding lien, the Special Magistrate may also take into account any documented expenses incurred to bring the property into compliance. The use of the term "documented expenses" in this article may also include permit fees required to bring the property into compliance and the costs of any lien search conducted pursuant to this section; however, the lien reduction application fee, any outstanding administrative costs, and any government penalties or fines shall not be included. The Special Magistrate may reduce the outstanding lien amount by the total amount of these documented expenses. Except as otherwise set forth herein, the special magistrate shall not reduce any lien, after documented expenses are deducted, if any, to less than ten (10) percent of the remaining outstanding lien.

(~~g~~h) Upon full compliance with the Special Magistrate's order reducing the lien, the applicant may request a release of lien from the Village. If the code compliance manager determines that the applicant has fully complied with the Special Magistrate's order and the lien should be released, a release of lien shall be prepared for execution by the Mayor and Village Clerk. The original release of lien shall be provided to the person requesting the release. The Village shall not be responsible for recording the release of lien nor any expense related thereto.

Section 3. Chapter 2 “Administration,” Article III, “Code Enforcement,” Section 2-238, “Lien reductions by the Village Manager,” shall be amended to read as follows:

Sec. 2-238. - Lien reductions by the Village Manager.

(a) Once a lien has been imposed under this article, a ~~person~~ property owner may request a lien reduction from the Village Manager under the following special circumstances (with proof of the following provided to the Village Manager):

(1) The property the lien attaches to will be sold under a warranty or special warranty deed prior to the next special magistrate hearing; or
(2) ~~The property is being sold under a warranty or special warranty deed; and~~ For residential homestead properties that are not being sold, the owner desires to enter into a stipulated agreement to bring the property into compliance by a date certain.
~~(3) All administrative costs or fees assessed in the underlying code enforcement case for the lien have been paid or will be paid prior to the village issuing a release or satisfaction of lien.~~

(b) All administrative costs or fees assessed in the underlying code enforcement case for the lien must have been paid or will be paid prior to the Village issuing a release or satisfaction of lien.

(~~b~~)(c) In determining whether to reduce the lien, and the amount of any reduction, the Village Manager ~~shall~~ may consider:

(1) Whether the property is in compliance with the Village Code or whether the person or entity requesting the lien reduction is willing to enter into an agreement with the Village Manager requiring the property to be brought into compliance prior to the village issuing a release or satisfaction of lien;
(2) The nature of the code violation(s);
(3) Action(s) taken to bring the property into compliance with the Village Code; and
(4) Any other matter suggesting that the lien reduction is in the best interests of the Village.

(~~c~~d) If the Village Manager in his/her sole discretion determines that a lien should be reduced, a release of lien shall be prepared for execution by the Village Manager and Village Clerk.

(~~d~~e) The original release or satisfaction of lien shall be provided to the person requesting the lien reduction upon payment of the reduced lien amount (if any) and any unpaid administrative costs and fees in certified funds to the Village Clerk. The Village shall not be responsible for recording the release or satisfaction of lien nor any expense related thereto.

(~~e~~f) Any person who requests a lien reduction from the Village Manager and is denied such reduction shall not be prohibited from submitting a written petition for a lien reduction hearing before the special magistrate as set forth in this article.

Section 4. Severability. If any section, subsection, sentence, clause, phrase, or portion of this Ordinance is for any reason held invalid or unconstitutional by any court of competent jurisdiction, such portion shall be deemed a separate, distinct, and independent provision, and such holding shall not affect the validity of the remaining portions thereof.

Section 5. Repeal of Laws in Conflict. All ordinances or parts of ordinances in conflict herewith are hereby repealed to the extent of such conflict.

Section 6. Codification. The sections of the ordinance may be made a part of the Village Code of Ordinances and may be re-numbered or re-lettered to accomplish such, and the word "ordinance" may be changed to "section", "division", or any other appropriate word.

Section 7. Effective Date. This Ordinance shall become effective immediately upon adoption by the Village Council of the Village of Palm Springs, Florida.

Council Member _____ offered the foregoing Ordinance, and moved its adoption. The motion was seconded by Council Member _____, and upon being put to a vote, the vote was as follows:

	Aye	Nay	Absent
BEV SMITH, MAYOR	☐	☐	☐
DOUG GUNTHER, VICE MAYOR	☐	☐	☐
JONI BRINKMAN, MAYOR PRO TEM	☐	☐	☐
PATTI WALLER, COUNCIL MEMBER	☐	☐	☐
GARY READY, COUNCIL MEMBER	☐	☐	☐

The Mayor thereupon declared this Ordinance approved and adopted by the Village Council of the Village of Palm Springs, Florida, on second reading, this _____ day of _____, 2022.

VILLAGE OF PALM SPRINGS, FLORIDA

BY: _____
BEVERLY SMITH, MAYOR

First Reading_____
Second Reading_____

ATTEST:

BY: _____
KIMBERLY M. WYNN, VILLAGE CLERK

REVIEWED FOR LEGAL FORM AND SUFFICIENCY

BY: _____
GLEN J. TORCIVIA, VILLAGE ATTORNEY

Village of Palm Springs

Executive Brief

AGENDA DATE: June 9, 2022

DEPARTMENT: Planning, Zoning & Building

ITEM #22: Proposed Resolution No. 2022-20 - Site Development Plan (SPR22-09) and Special Exception Use (PSSE22-05) - Patel Dental Office - 1962 South Military Trail *(Quasi-Judicial Hearing)*

SUMMARY: Mr. Aaron M. Taylor, agent for the owner, Vaani Real Estate LLC, requests a Site Development Plan (SPR22-09) and Special Exception Use (PSSE22-05) approval for the Commercial General property located at 1962 South Military Trail. The applicant proposes the construction of a 4,977 square foot dental office with a laboratory.

Currently, the 0.59-acre property is undeveloped. The property was voluntarily annexed into the Village in August 2004. The annexation was subject to an agreement to grant Special Exception Use for the development of eight flex units within one building, and additionally to permit a 96 ft. lot width and lot frontage. The deviation from standard lot width/frontage is still effective.

A medical office is permitted to be used in the Commercial General district (CG). However, a dental laboratory is permissible as a Special Exception Use in the CG district. The proposed uses provide a transition between the commercial use along South Military Trail and the multi-family residences along Line Drive.

As part of the proposed Site Development Plan, the applicant is requesting three (3) variances:

1. (PSV22-05) - Request to allow a 5.5' wide landscaped buffer along the northern boundary adjacent to Line Drive (provides relief from Section 34-162(b)(6) that requires a 10' wide buffer).
2. (PSV22-06) - Request to allow a 10' side setback along the south side of the property (provides relief from Section 34-826(7) that requires a 15' side setback).
3. (PSV22-07) - Request to allow a 6' height monument sign being setback 5' (Provides relief from Section 34-327(b)(1) that requires a maximum height of 5' when the sign is being setback 5').

Note: Variances 1 and 2 were approved by the Planning and Zoning Board during their regular meeting on May 10, 2022. The requested sign setback variance was not considered by the Planning & Zoning Board as the Village Code (Section 34-329) provides that sign variances are approved by the Village Council.

The Planning and Zoning Board considered this application during their May 10, 2022 meeting and recommended approval. The Board expressed concerns regarding the number of proposed patient procedure rooms and recommended reducing the number of rooms in order to reduce the number of

employees and patients at the property to prevent future parking issues.

The Planning, Zoning & Building staff do not object to the proposed Special Exception Use, Site Development Plan, and variances requested, and recommend conditional approval to facilitate the development project proposed for the property.

FISCAL IMPACT:

The proposed development will enhance the village's assessed property valuation. Additionally, the new construction may have a positive effect on neighboring properties.

ATTACHMENTS:

1. Proposed Resolution No. 2022-20 - Site Development Plan (SPR22-09) and Special Exception Use (PSSE22-05) - Patel Dental - 1962 South Military Trail
2. Exhibit A Staff Report
3. Applicant Project Narrative and Justification Statement
4. Site Plan, Landscape Plan, Architectural Plans, and Letters
5. Warranty Deed
6. Color Rendering
7. Aerial Map and Location Map

RESOLUTION NO. 2022-20

A RESOLUTION OF THE VILLAGE COUNCIL OF THE VILLAGE OF PALM SPRINGS, FLORIDA, (APPROVING/DENYING), WITH CONDITIONS, A SITE PLAN, (SPR22-09) AND CONCURRENTLY REQUESTING A SPECIAL EXCEPTION USE (PSSE22-05) TO ALLOW A 4,977 SQUARE FOOT DENTAL OFFICE, WITH A LABORATORY USE AND ONE (1) VARIANCE (PSV22-02), TO ALLOW A 6' FOOT HEIGHT MONUMENT SIGN BEING SETBACK 5' FEET, RATHER THAN THE 5' MAXIMUM HEIGHT PERMITTED, LOCATED AT 1962 SOUTH MILITARY TRAIL; AND PROVIDING FOR AN EFFECTIVE DATE.

WHEREAS, Mr. Aaron Taylor with Arc Development Global, LLC, Agent for the owner Vaani Real Estate LLC ("Applicant"), request approval of a Site Plan (SPR22-09) and concurrently a Special Exception Use (PSSE22-05), to allow a 4,977 square foot dental office with a laboratory, use on the commercial property. The property is located at 4206-4208 Lake Worth Road; and

WHEREAS, Applicant also request one (1) variance:

1) Section 34-327(b)(1) - (PSV22-07) to allow a 6' height monument sign being setback 5', rather than the 5' maximum height permitted.

WHEREAS, the Village Council and Planning & Zoning Board ("Board") heard and considered the Site Plan and Special Exception Use at the Board's May 10, 2022 meeting, and the Board's recommendation has been transmitted to the Village Council; and

WHEREAS, the Village Council has heard this matter in public session; has considered the presentation and other evidence presented by the Applicant; has received and considered the recommendations of the Village Staff and the Planning and Zoning Board; and has otherwise been fully informed regarding this matter.

NOW THEREFORE, BE IT RESOLVED BY THE VILLAGE COUNCIL OF THE VILLAGE OF PALM SPRINGS, FLORIDA:

Section 1. The Village Council having received and considered the request of Mr. Aaron Taylor, agent for the ("Applicant"), for approval of Site Plan (SPR22-09), Special Exception Use (PSSE22-05) for the proposed dental office with a laboratory use, determines as follows:

Note: Within the proposed Site Plan Amendment, the Applicant is requesting one (1) variance:

_____Having been otherwise fully apprised of the premises herein, the Village Council hereby approves the said application as revised, with the staff report conditions attached hereto as Exhibit "A", and which is incorporated herein by reference.

OR

_____Having been otherwise fully apprised of the premises herein, the Village Council hereby denies the application for the following reason(s):

_____

_____

_____

Notwithstanding any exceptions, conditions or other approvals granted herein, the applicant must conform to all other applicable codes, ordinances, and laws whether stated herein or not.

Section 2. The Village Council having received and considered the request by Mr. Aaron Taylor, agent for the Applicant, for approval of one (1) variance, (PSV22-07) from Section 34-327(b)(1) to allow a 6' height monument sign being setback 5', rather than the 5' maximum height permitted, in light of the applicable legal criteria set forth in Chapter 34 of the Palm Springs Code and the sworn testimony and other evidence presented at pubic hearing, determines as follows:

_____Having been otherwise fully apprised of the premises herein, thee Village Council hereby finds that there is substantial evidence to support same, and hereby APPROVES the request for the above-described variance relief.

OR

_____Having been otherwise fully apprised of the premises herein, the Village Council hereby DENIES the application for variance relief, finding that the requirements of Chapter 34 have not been met for the following reasons:

_____

_____

_____

Section 3. This Resolution shall take effect immediately upon adoption.

Council Member _____ offered the foregoing resolution. Council Member_____ seconded the motion, and upon being put to a vote, the vote was as follows:

	Aye	Nay	Absent
BEV SMITH, MAYOR	☐	☐	☐
DOUG GUNTHER, VICE MAYOR	☐	☐	☐
JONI BRINKMAN, MAYOR PRO TEM	☐	☐	☐
PATTI WALLER, COUNCIL MEMBER	☐	☐	☐
GARY READY, COUNCIL MEMBER	☐	☐	☐

The Mayor thereupon declared the Resolution duly passed and adopted this _____ day of _____2022.

VILLAGE OF PALM SPRINGS, FLORIDA

BY:_____
BEV SMITH, MAYOR

ATTEST:

BY:_____
KIMBERLY M. WYNN, VILLAGE CLERK

REVIEWED FOR FORM AND LEGAL SUFFICIENCY

BY:_____
GLEN J. TORCIVIA, VILLAGE ATTORNEY

PLANNING, ZONING & BUILDING STAFF REPORT

SUBJECT: Site Development Plan with Variances – Patel Dental Office – 1962 S Military Trail

Application Summary			
Applicant / Petitioner	Aaron Taylor, Arc Development Global, LLC (Agent) Vaani Real Estate LLC (Applicant)	**Submittal Date**	11/02/2021
Reference Name	Patel Dental Office	**Case Number**	**SPR22-09, PSSE22-05, PSV22-05, PSV22-06, PSV22-07**
		Parcel Control No.	70-42-44-12-00-000-5380
Location	1962 S Military Trail	**Site Area**	± 0.59 acres
P&Z Board	May 10, 2022	**Village Council**	June 9, 2022
Requests			
Proposed Use(s)	Site Development Plan to construct a new 4,977 square-foot dental office and concurrently special exception use to allow a laboratory use.		
Number of Buildings	One (1) one-story building - 4,977 sf		
Variances	**Approved by P&Z Board on May 10, 2022 (P&Z Bd Order 2022-04)** **1) PSV22-05 -** A Variance relief from Section 34-162(b)(6) to allow a 5.5' wide landscaped buffer along the northern boundary instead of the 10' wide buffer required. **2) PSV22-06 -** A Variance relief from Section 34-826(7) to allow a 10' side setback along the southern boundary instead of the 15' minimum required. **VILLAGE COUNCIL CONSIDERATION:** 3) **PSV22-07 -** A Variance relief from Section 34-327(b)(1) to allow a 6' height monument sign being setback 5' rather than 5' maximum height permitted.		

Parking			
Code	**Required**	**Provided**	**Meets Requirement**
Total Vehicular Parking	One space per 200 sf = 25 spaces	25 spaces	Yes

Setbacks			
Code	**Required Minimum**	**Proposed**	**Meets Requirement**
Front Yard (West)	50'	83.66'	Yes
Rear Yard (East)	20'	69.47'	Yes
Side Yard Corner (North)	25'	37.26'	Yes
Side Yard (South)	15'	10'	*No (Variance PSV22-06 requested)

Site Characteristics			
Existing Use	Vacant Lot	**Proposed Use**	Dental Clinic and Laboratory
Existing Zoning	Commercial General (CG)	**Existing Future Land Use**	Commercial

Surrounding Existing Land Use, Future Land Use, and Zoning			
Direction	**Existing Use**	**Future Land Use**	**Zoning District**
North	Moya Property/Duque Auto Repair	Commercial	Commercial General (CG)
South	Lake Worth DD Canal L-8 and Commercial Plaza	Unknown Unincorporated Palm Beach County	Residential Multi-Family (RM)
East	Residential Duplexes	Low Density Residential	Residential Multi-Family (RM)
West	Commercial shopping Center	Unknown Unincorporated Palm Beach County	Unknown Unincorporated Palm Beach County

Recommendation

Planning, Zoning & Building Staff recommends conditional approval of the proposed 4,977 square feet dental office building with a laboratory use, as depicted on the proposed site plan, based on consistency with the Village Comprehensive Plan and compatibility with surrounding uses.

The Planning and Zoning Board considered the application and recommended approval – motion carried 5-0.

The board expressed concerns regarding the number of rooms proposed and recommended taking into consideration the reduction of them to prevent parking issues once the business is operating.



I. Site History

- Ordinance 2004-32: Annexation

The property was voluntarily annexed into the Village of Palm Springs in August, 2004 as a vacant parcel and designated with the Land Development as Commercial General zoning district and Future Land Use Commercial. The annexation was subject to an agreement to grant Special Exception Use for the development of eight flex units within one building, and additionally to permit a ninety-six feet (96 ft) lot width and lot frontage. The property has been vacant since annexation.

II. Comprehensive Plan Consistency

The subject property's Future Land Use designation and Zoning are Commercial and Commercial General (CG), respectively. The proposed site development plan to construct a new dental clinic model the site for the proposed new use as a dental clinic with laboratory is consistent with goals, objectives, and policies of the Village's Comprehensive Plan.

Ill. Variances Requested

The applicant is seeking the following variances:

- **Variance 1: PSV22-05 -** A Variance relief from Section 34-162(b)(6) to allow a 5.5' wide landscaped buffer along the northern boundary instead of the 10' wide buffer required.

- **Variance 2: PSV22-06 -** A Variance relief from Section 34-826(7) to allow a 10' side setback along the southern boundary instead of the 15' minimum required.

The applicant's full justification is hereto:

a. That special condition and circumstances exist which are peculiar to the land, structure, or building involved, and which are not applicable to other lands, structures, or buildings in the same land development district.

Variances 1 & 2: The subject site is .59ac, which is small for a commercial site. Although it does meet the minimum property development regulations for the minimum lot dimensions, the site is a narrow rectangular lot and is slightly irregularly shaped. The small size of the lot eliminated the possibility of being able to comply with all site elements, including minimum landscape buffer widths. Due to the site constrains, site design options are extremely limited. Therefore, the design considers life-safety and circulation as priority. As a result, there is not sufficient land area to redesign the site in a manner that would accommodate the minimum required 10' perimeter buffer for the North. See chart below for specific buffer variance requests for each buffer.

	Location	Required	Provided	Variance
1	North ROW Buffer	10'	5.5'	4.5'
2	South Setback	15'	10'	5'
3	West ROW Buffer	15'	15'	None
4	East Buffer	15'	15'	None

b. That the special conditions and circumstances do not result from the actions of the applicant.

Variances 1 & 2: Yes. The current property owner purchased the lot in December 2018. The rectangular, slightly irregularly shaped .62ac lot has been in its current configuration since prior to the current property owner's purchase. The site constraints are not a direct result of actions from the property owner. Any development of

allowed by Code of similar size would have to meet the same development criteria. The small size and configuration of the lot eliminate the possibility of all site element development criteria to be met.

c. That granting the variance requested will not confer on the applicant any special privilege that is denied by this chapter to other lands, buildings, or structures in the same land development district.

Variance 1: 1. Although the variance request (V.1) to reduce the ROW Buffer (North) to 5.5' in width. There is still a minimum of 10' of planting along the North property line; 5.5' of planting g will be provided within the property line and the remaining 4.5' of landscaping will be provided immediately adjacent to the North property line along Line Drive.

Variance 2: Although the variance request (V.2) to reduce the Side (South) Setback to 10' instead of the required 15' does reduce the side setback by 5', this reduction will have no negative affect on the existing commercial plaza to the south. There is a 75' wide LWDD canal immediately adjacent to the south property line of the subject property, and the nearest commercial plaza is more than 130' from the subject property. Although a variance is being requested to reduce the side (south) setback, the entire side of the Dental Office building will be screened by a 10' landscape buffer.

d. That literal interpretation of the provisions of this chapter would deprive the applicant of rights commonly enjoyed by other properties in the same land development district under the terms of this chapter and would work unnecessary and undue hardship on the applicant.

Variances 1 & 2: Yes. Denial of the variance requests from the buffer requests would cause the site to be undevelopable. Due to the small .62-acre site, the irregular shape of the lot, and the minimum building requirements of the Medical Office use, there is no other design alternative exists that would reduce or eliminate the need variances for the North buffer and the south setback

e. That the variance granted is the minimum variance that will make possible the reasonable use of the land, building, or structure.

Variances 1 & 2: Yes. (Refer to Criteria 1,2 & 3) The small site size, the irregular shape of the lot, and the minimum building requirements of the Medical Office use, there is no other design alternative exists that would reduce or eliminate the need variances for the North Buffer (Refer to Site Plan and landscape Plan). The Village of Palm Springs Development Code provides specific minimum requirements pertaining to:

- Building Setbacks
- Drive-isle Widths
- Sidewalk Dimensions
- Parking Dimensions
- Terminal Island Widths
- Truck Turning Radii for Trucks

To meet all the minimum required site element development standards, the North ROW buffer width and the Side (south) Setback had to be reduced.

f. That the granting of the variance will be in harmony with the general intent and purpose of this chapter.

Variances 1 & 2: Yes, The Final Site Plan has undergone several revisions in our efforts to try to comply with all the development criteria outline in the Land Development Code and to meet the functional needs of the Dental Office Use. The only variances requested, are those that were not Life-Safety in nature and could not be met. To meet all other Life-Safety design guidelines. The Variance requests for the reduction in the North ROW Buffer and the Variance for the Side (South) Setback causes no visual inconsistencies with other existing development along Military Trail corridor. The Site will still provide the minimum 10' of required buffer to the north and the reduction

in the side (south) setback has no negative affect on the existing commercial plaza to the south. There is a 75' wide LWDD canal immediately adjacent to the south property line of the subject property, and the nearest commercial plaza is more than 130' from the subject property (See Below). Although a variance is being requested to reduce the side (south) setback, the entire side of the Dental Office building will be screened by a 10' landscape buffer. Therefore, Granting the owner's variance requests will be in harmony with the general intent and purpose of the Land Development Code.

g. That such variance will not be injurious to the area involved or otherwise detrimental to the public welfare.

Variance 1: The original site design called for a 4.26 buffer with no landscape along the north property line along Line Drive. After meeting with the Doctor about how much the building can feasibly be reduced in size and still be operationally functional, the site has been redesigned by shrinking the proposed building from 8,834 SF to 4,977 SF. By narrowing the design of the proposed Dental Office, it allowed for a wider one-way drive-isle and slightly increased buffer width along Line Drive to 5.5'. Line Drive is a ROW along the North property line which, happens to be Village of Palm Springs Road. We propose 5' of additional landscape buffer be provided within the open space area of Line Drive on the south and north side of the existing sidewalk. Although the subject site is not large enough to accommodate the full 10' ROW Buffer within the boundary of the site, there will still be at least 10' minimum of landscaping provided between the proposed Dental/Medical Office Use and the adjacent Commercial/Office Use to the North. The approval of this Variance request would still provide all the required landscaping and enhance the aesthetics of the surrounding area.

Variance 2: Immediately south of the subject lot is a 75' LWDD Canal and 20' ROW (Canal 8 Road). The nearest commercial plaza to the south is more than 135' from the Dental Office project. Currently the subject site is vacant with people illegally using the property as a parking area for commercial vehicles without the property owner's knowledge. The proposed Dental Office building has already been reduced in size to the greatest extent possible in the attempt to comply will all the Village of Palm Springs site element requirements. Although we are requesting a 5' deviation from the minimum 15' setback requirement along the south property line, the required quantity of trees and landscaping will still be provided to screen the Dental Office building from the commercial plaza to the south. Therefore, there will be no negative effects on the commercial use to the south of the subject site because of the variance request.

- **Variance 3: PSV22-07 -** A Variance relief from Section 34-327(b)(1) to allow a 6' height monument sign being setback 5' rather than the 5' maximum height permitted.

1. Special and unique conditions exist which are peculiar to the applicant's case and which are not generally applicable to the property located within the zoning district or neighborhood involved, such as natural or manmade sight limitations from the public rights-of-way.

Variance 3: Yes. The site is small for a commercial site. Although it does meet the minimum property development regulations for the minimum lot dimensions, the site is slightly irregularly shaped and as a result eliminates the possibility of being able to comply with all site element development dimensional criteria. Therefore, in order to maintain a sufficient distance from the vehicular overhang for cars parking along the most westerly parking stalls, the proposed sign location has to be setback 5' from the property line. In accordance with the Land Development Code, the sign height is based on the setback. In this case, a setback of 5' only permits a monument sign to be a maximum of 5' tall. Military Trail is a large, high-volume right-of-Way. A 5' high sign will not provide sufficient visibility for the proposed Dental Office Use. Therefore, a variance had to be requested to allow the sign to be a maximum of 6' tall instead of the required 5' maximum.

2. The special and unique conditions are not directly attributable to the actions of the applicant.

Variance 3: Any proposed use would require a Monument sign along Military Trail. Any proposed use on this .59ac site would not be able to meet all the Development Ordinances/Zoning Code for all site elements; some variances

would be necessary. From a design and life-safety and functionality of the site, the logical decision was to first focus on those elements, that are life-safety in nature and necessary for the efficiency of functional pedestrian and vehicular use for the site. Then we would request variance for those elements not as detrimental to life-safety or public welfare (i.e. signage height based on the available setbacks).

3. The literal interpretation of this article, as applied to the applicant, would deprive the applicant of rights commonly enjoyed by persons who are similarly situated.

Variance 3: Yes. Denial of the owner's Variance request would deprive him of the same privileges as the adjacent property owners to the immediate south of the subject site. The Two parcel immediately south of the subject site have signs ranging from 10'-15' in height with similar setbacks. The original proposed sign height for the Dental office was 8'. Based on feedback from the Village of Palm Springs Staff, the proposed sign height has been reduced to 6' maximum height.

4. The variance granted is the minimum necessary for the application to make reasonable use of the property.

The site is small for a commercial site. Although it does meet the minimum property development regulations for the minimum lot dimensions, the site is slightly irregularly shaped along the north property line adjacent to Forest Hill Blvd. The small size of the lot eliminated he possibility of being able to comply with all site elements and site elements dimensional requirements on site. Therefore, in order to maintain a safe distance from vehicular overhang for cars parking along the most westerly parking stalls, a Variance is necessary to allow a 6' tall proposed sign to be setback 5' from the property line along Military Trail.

5. Granting the variance is not detrimental to the public welfare, or injurious to the property improvements in the zoning district or neighborhood involved.

Variance 3: Granting the owner's Variance request would not be injurious to the public welfare or surrounding commercial or residential uses. Although the proposed monument sign will have reduced setbacks, the proposed setback of 5' is not inconsistent with most other commercial signs along the Military Trail Corridor. In additions, the Proposed sign is smaller in height than most other signs along the Military Corridor as well.

Staff supports the applicant's request based on the existing special conditions and circumstances which are peculiar to the land and do not result from actions of the applicant. Granting the variances requested will not confer on the applicant any privilege that is denied to other lands and will make possible the reasonable use of the land. Granting the variances will be in harmony with the general intent and purpose of the applicant requests and will not be injurious to the area involved or otherwise detrimental to the public welfare.

IV. Neighborhood Compatibility

1) The proposed project is located on the east side of Military Trail, on the southeast corner of Military Trail and Line Drive.
2) The proposed facility is a desirable use within the Commercial General zoning district.
3) The proposed project is on one of the most important corridors within the Village limits, Military Trail. This corridor connects Palm Springs to the northern and southern portions of the County.
4) A mix of different commercial uses exist along Military Trail.
5) This project serves as a transition from the Military Trail commercial corridor to the residential multifamily residences to the east.
6) Aesthetic improvements are proposed for the Moya property commercial building neighboring the north. The two improvements along Line Road would be key actions in revitalizing the surrounding section of the Military Trail commercial corridor.
7) Transit service is available through Palm Tran routes 3 along Military Trail and 46 along Forest Hill Blvd. Both sides of the adjacent section of Military Trail have a designated bike lane.

V. Regulatory Issues

- The site plan generally conforms to the property development standards of the CG district.
  1) The proposed project plan generally meets required site development regulations.
  2) Two variances requested shall be approved by the Planning & Zoning Board prior to the consideration of the Site Plan.
  3) The Line Drive driveway shall meet FDOT distance requirements.
  4) Permits from all applicable agencies, including but not limited to Lake Worth Drainage District, PBC Fire Rescue, and Village of Palm Springs are required prior to construction.
  5) Civil/Utility plans shall be approved by the Village's Engineer.

VI. Environmental Issues:

There are no environmental (wetlands, floodplains, etc.) issues identified.

VII. Community Outreach/ Notification

- The subject property was posted on April 28, 2022.
- Public Notification letters were mailed to all property owners within a 300 feet radius of subject property on April 25, 2022.
- Legal advertisement was published in the paper on May 5, 2022.
- Staff has not received any inquiries or comments because of the notices.

VIII. Proposed Development Plan Details

The petitioner's development plans dated received on November 2, 2021, depicts the following:

- An application submitted for a Site Plan with 3 variances for the construction of a new 4,977 square-foot dental office building with a laboratory use.
  1. Site Plan received November 2, 2021, revised and resubmitted on April 29, 2022.
  2. Landscape plans received November 2, 2021, revised and resubmitted on March 16, 2022.
  3. Preliminary Engineering plans received November 2, 2021, revised and resubmitted on March 16, 2022.
  4. Architectural plans dated received November 2, 2021, revised and resubmitted on January 24, 2022.
  5. Photometric plan received November 2, 2021, revised and resubmitted on February 1, 2022.
  6. Boundary survey.
  7. Justification Statement and proposed use.
  8. Drainage calculations.
  9. Color rendering
  10. Color site plan

IX. Recommendation

The applicant is proposing a 4,977 square-foot one-story dental office building with a laboratory use. This new building will have a dental/medical Office Use with a special exception dental lab use. The applicant is proposing a site plan with two (2) site plan variances and one (1) monument sign variance to construct the new building on the narrow and irregular 0.59-acre site.

Planning, Zoning & Building Staff has conducted a review of the application and found the proposed project to be consistent with goal, objectives, and policies of the Village's Comprehensive Plan. The proposed project is generally consistent with the Land Development and zoning regulations and all other portions of the code. The proposed dental office with laboratory use does not significantly reduce light and air on adjacent properties and would not be a deterrent to surrounding properties. The new project does not negatively impact natural systems. The proposed project will improve the aesthetics of the Military Trail Boulevard corridor.

Planning, Zoning & Building Staff recommends conditional approval of the proposed Site Development Plan with three variances subject to the following thirty-five (35) conditions below:

1. Build out date of December 31, 2022.
2. The site plan approval is valid within 24 months of Planning & Zoning Board approval.
3. The special exception approval shall be implemented within 18 months of Council approval.
4. A Utility/Civil Plan shall be approved by the Village Engineer and the Village Utility Department **at time of permitting**.
5. The commercial business(s) hours of operations shall be in accordance with the Village hour of operations regulations.
6. Overnight parking on the parking lot shall be prohibited.
7. No outdoor storage shall be allowed unless is screened from view.
8. Wall signs shall be in accordance with the Village's Land Development Regulations.
9. A root barrier shall be provided on trees that are within 12' of utility lines.
10. The temporary access easement located on the north side of the L-8 canal right-of-way shall be conveyed from the property owner to LWDD prior to the issuance of LWDD permits.
11. All driveways along Line Drive shall be located at least 30 feet from the SR 809 right-of-way line.
12. Estimate of sewer flow based on proposed usage shall be provided at time of building permit.
13. Utility easements shall not overlap more than 5' any landscaped buffers.
14. Conditions listed on the conditional approval letter issued by Chen Moore and Associates on March 28, 2022 shall be addressed **at time of Civil/Utility Review**.
15. Any existing or proposed utility box/cabinet shall be screened from view. Staff recommends wrapping the cabinet/box with an appropriate design for the existing/proposed location.
16. The construction dumpster shall be only provided by Waste Pro USA who is under franchise Agreement with the Village.
17. Photometric plans shall be approved by the Planning, Zoning and Building Department **at time of permitting**.
18. Landscaped areas shall be irrigated including but not limited to buffer, islands, planter boxes, etc.
19. Irrigation plans shall be provided **at the time of permitting**. Non-potable water shall be used for the irrigation system per Village code.
20. Provide permits from all applicable permitting agencies, including but not limited to, FDOT, PBC Fire Rescue and Village of Palm Springs **at the time of permitting**.
21. The property owner shall register an Agent of Record, prior to issuance of a permit, to establish a contact person responsible for compliance with this Development Order, including site plan/landscape plan details and conditions of approval.
22. All mechanical equipment's and above-ground infrastructure shall be screened from view.
23. The Applicant may be required to undertake additional security measures, based on the number of complaints, or calls for service for incidents at the premises, as determined by the Police Chief. Such additional security measures, as approved by the Police Chief, may include increased on-site security at the operator's sole expense.
24. Verify utility and easement locations to ensure that there are no conflicts with landscaping, revise **at time of permitting** as needed.
25. All electric utilities shall be underground.
26. A pre-construction meeting shall be scheduled with the Village Planning, Zoning & Building Development Department prior to commencement of any construction activity. Permits are required from the Planning, Zoning & Building Department prior to commencing any construction or renovation. The project shall be constructed in accordance with the FBC edition in effect **at the time of permitting**.
27. Any sidewalk broken or damaged during construction shall be replaced by the contractor **prior to CO**.
28. The Landscaping shall be certified by the Landscape Architect upon completion and **prior to Certificate of Occupancy/Certificate of Completion** of each improvement area.
29. Absolutely no occupancy, other than construction personnel, is permitted **prior to TCO/CO**.
30. Photometrics must be certified by an engineer **prior to CO**.
31. The civil engineer of record shall certify the site construction **prior to Certificate of Occupancy**.
32. The applicant may be required to provide a resident inspector for structural elements such as concrete

pours in accordance with Section 109.1.3 FBC 2010 and F.S. 553.791. Determination shall be made at time of pre-construction conference with Planning Zoning and Building Director.

33. Palm Beach County "Digital Inclusion infrastructure" (broadband antenna and related facilities) shall be accommodated on the property (if location is determined to be desirable for broadband coverage by Palm Beach County or School District of Palm Beach County), prior to **Certificate of Completion**, and property owner shall voluntarily serve as a program partner (easement/agreement, electric) through the life of the program.
34. The General Contractor shall be on site during all construction activity in accordance with FS 489.1195.
35. **At the time of CO**, the petitioner shall provide the Planning, Zoning and Building Department with electronic copies of as-builts.

Arc Development Global

JUSTIFICATION STATEMENT – SITE PLAN & VARIANCE APPROVAL
Patel Dental Office

October 15, 2021
Revised 1-14-2021
Revised 4-7-22
Revised 4-28-22

REQUEST:
On behalf of the property owner (PBFP LLC) we are requesting the following:

- Development Review Site Plan Approval for a Dental/Medical Office Use
- Concurrent Special Exception for (Dental Lab)
- Concurrent Variance Application for (North Buffer, South Buffer & Sign)

PROJECT HISTORY:
The subject property is located at 1962 S. Military Trail and consists of .59 acres. The current Future Land Use is Commercial with a Commercial Zoning Designation of General Commercial (CG). The subject site is currently vacant and there are no records of a current approved use. Current property owner VAANI REAL ESTATE LLC acquired the property in April. The owner is proposing a Dental/Medical Office Use with a Dental Lab. According to the Village of Palms Springs Zoning Code, Medical Office is uses are allowed in CG Zoning Districts subject to Development Review approval. However, the Dental Lab Use is subject to a Special Exception Approval process. The .59ac site is a narrow rectangular lot located at the southeast intersection of military Trail. & Line Drive. The size and configuration of the subject lot does cause some development limitations which cannot be overcome to develop the proposed Dental/Medical Office Use with Dental Lab Use. Therefore, in addition to the Development Review request for a Special Exception, a Site Plan Approval application is required, and three (3) Variances are needed. The Variance request includes the minimum variances needed to construct the proposed Dental/Medical Office with lab building, and development the site in the most logical and efficient manner possible, the following Variance are being requested:

Variance Chart				
	Codes Section	**Required**	**Provided**	**Variance**
V1	Section: 34-162 (ROW Buffer – North)	10’ ROW Buffer	5.5’ ROW Buffer	4.5’
V2	Section: 34-826(7) (Side Setback)	15’ Side Setback	10’ Side Setback	5’
V3	Section: 34-327.b1	5’ Height	6’ Height	1’

Note:
This project has a concurrent Special Exception and Variance applications being review by Village of Palm Springs.

DEVELOPMENT STANDARDS:

In accordance with Section 34-1353, all commercial developments are subject to the following development criteria.

- Commercial developments shall be located to have adequate access to arterial and/or collector streets, and to minimize the effect on residential areas and environmentally sensitive areas.
    - **Response:** The Dental/Medical Office use project will have two means of ingress/egress along the north property line fronting Line Drive. The subject site is located at the southeast corner of the intersection of Military Trail and Line Drive. This area of Military Trail and Line Drive is commercial in nature and will have no negative effect on the nearby residential areas to the east. There are no environmentally sensitive areas nearby that will be affected by the proposed development.

- Commercial developments shall not be located within residential areas, except as part of a planned development approved under the provisions of division 7, subdivision IX of this article, and shall only be located along an arterial/collector street.
    - **Response:** The subject parcel of land proposed Dental/Medical Office Development is a vacant commercially zoned lot; located approximately ¼ of a mile from the intersection of Forest Hill Blvd & Military Trail, at the southeast corner of the intersection of Line Drive. This entire corridor along Military Trail is Commercial in nature. The nearest residential area is east of the proposed Dental/Medical Office development and will not be negatively affected by the development. The proposed Development complies with all applicable municipal Land Development ordinances for site design, including building setbacks, buffers widths, and lamination levels. Therefore, there will be no adverse impacts to the adjacent multi-family residential use.

- Commercial developments adjacent to single-family residential areas shall provide adequate separation and buffering to reduce the visibility of the commercial development from the single-family development. Features of the commercial development which are typically noisy or unsightly, such as loading areas, air conditioner compressors and garbage dumpsters, or which involve significant activity, such as parking areas, shall not be located on any portion of a commercial site immediately adjacent to a single-family area unless separated by a road and standard buffering or by an intervening natural area and sufficient additional buffering to prevent the noisy or unsightly activity from being observed from the residential area. (See also article III of this chapter.)
    - **Response:** The proposed Dental/Medical Office project is adjacent to a residential development to the east of the subject property. However, the residential parcel of land located east of the subject site is not a single-family residential development; it is a multi-family development. Although the proposed Dental/Medical Office Use is immediately adjacent to the multi-family development to the east, the site has been designed to provide a 15' Landscape Buffer with a 6'

pre-cast concrete wall along the east property in order to eliminate any possible impact on the existing multi-family residential development to the east.

- Traffic access to commercial areas shall not be arranged in such a way that traffic utilizes streets within residential areas, except for traffic generated entirely within such residential areas.
    - **Response:** Traffic generated from the proposed Medical Office use will come from Military Trail on to Line Drive, directly into the Dental/Medical Office Use. Any traffic that may come from the east., will people from the residential neighborhood who choose to utilize the services provided by the proposed Dental/Medical Office Use. (See Aerial View and Site Plan ingress/egress location Below)



Aerial View – 1962 S. Military Trail (Intersection)

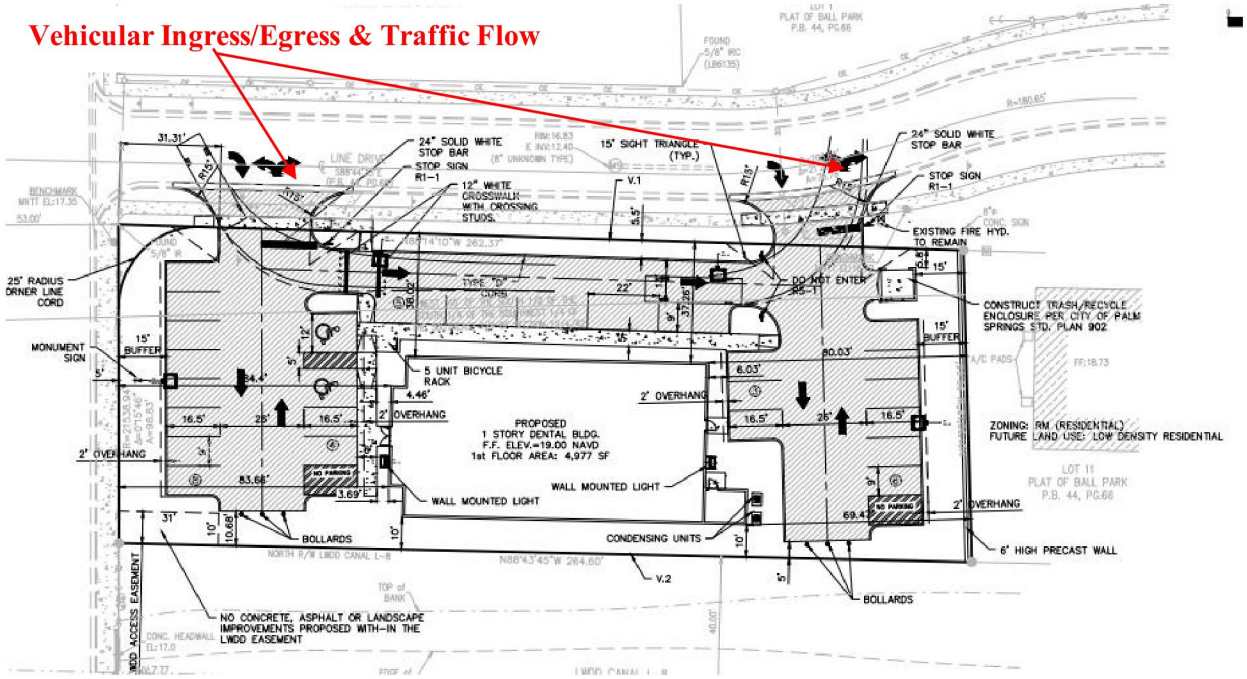

Site Plan – Vehicular Ingress/Egress

FOUNDATION PLANTING:

In accordance to Section: 34-164(b), Medical Office building is required to have a min. of 5' wide foundation planting strips at a minimum length of 25% of each façade of the building. Foundation planting has been provided for the front and sides of the building are 8' wide.

Dental/Medical Office– Foundation Planting Percentage per Each Facade

North	Side	5' Wide	100%
East	Rear	0' Wide	76%
West	Front	5' Wide	88%
South	Side	5' Wide	100%

Note: Foundation Planting Area along the south portion of the building is inclusive of the 10' Buffer along the south property line.

OPEN SPACE:

In accordance with Section: 34-1358, Commercial Developments are required to have a minimum of 15% Open Space. The proposed Medical Office development provides 24.15% Open Space. Open Space calculation includes buffer areas.

DUMPSTER AREA:

The Dumpster and Dumpster Enclosure have been located just north of the parking area at the northeastern portion of the property. The Dumpster enclosure has been located in a manner to flow with the natural circulation pattern of the internal flow of vehicular traffic. The dumpster will be screened with both a solid opaque wall, a 15' Landscape Buffer with 6' Concrete pre-cast wall to the east. In addition, and landscape buffer will be provided to the north along Line Drive, and to the South there is a landscaped terminal island to provide a visual landscape screen between the most easterly parking area and the dumpster enclosure.

FREESTANDING SIGNS:

The owner of the property is requesting one freestanding monument sign. One freestanding monument sign is to identify the Dental Office use. According to the Code the number of freestanding signs allowed per project is based on the width of the property line Fronting the road. The (Front) west property line of the subject property fronts on Military Trail. The linear footage of the West property line is 98.83'. The Proposed Monument sign will be setback 5' and located toward the western portion of the property, with a height not to exceed 6'. In accordance with Section 34-327, the maximum sign height allowed with a setback of 5' is a 5' high sign. The proposed sign is 6' in width leaving only a 5' remaining for the sign setback. Therefore, the minimum 1' variance required to install the a 6' high along Military Trail. ***(Reference Variance request #3 – Sign Setback).*** In order to comply with Section: 34-273, the lettering and color scheme of the proposed sign will be architecturally consistent with the Dental/Medical Office building.

Aerial – Proposed Sign Location

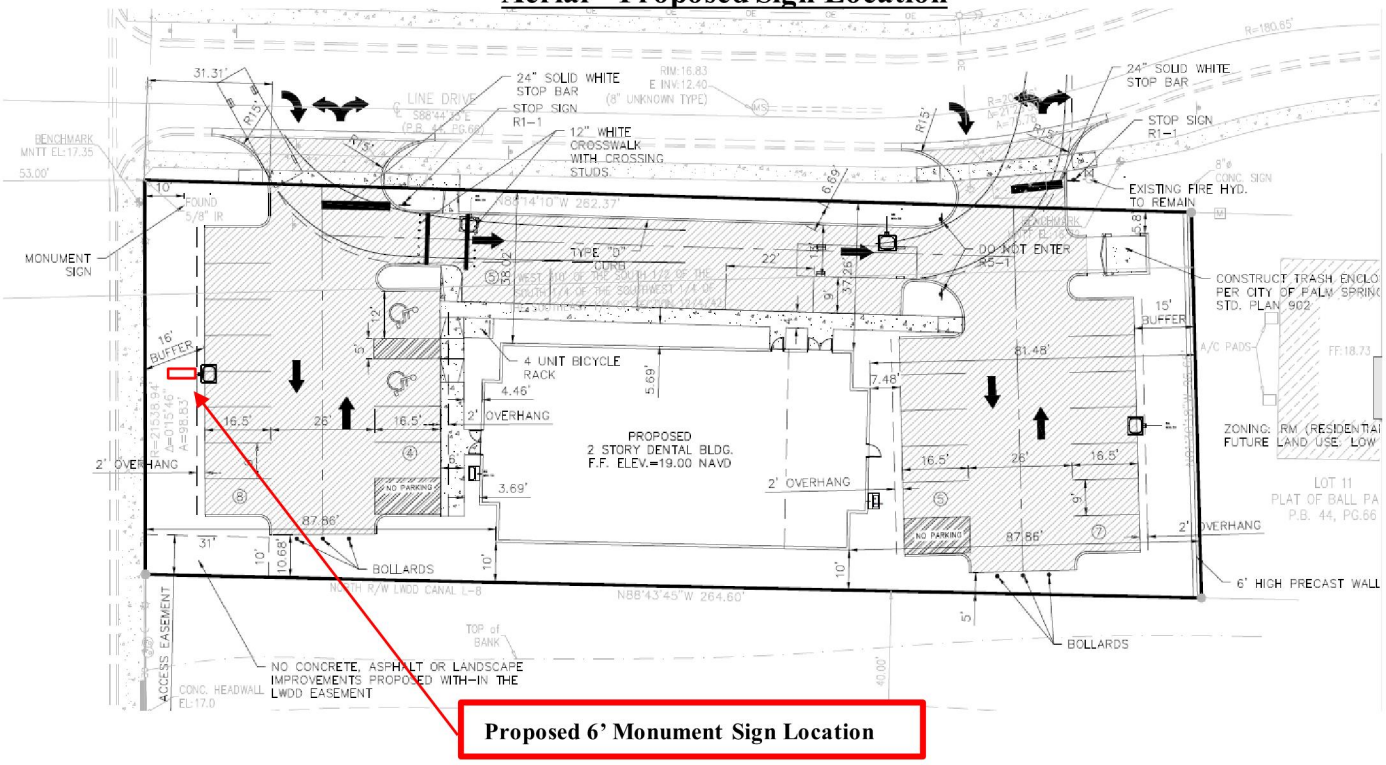

LANDSCAPE BUFFERS:

In Accordance with Section: 34-162, the minimum required landscape buffer widths are required for the proposed Medical Office Use:

	Buffer Location	Required	Provided	Variance
1	North ROW Buffer	10'	5.5'	5.5'
2	South Buffer	15'	10'	None
3	West ROW Buffer	15'	15'	None
4	East Buffer	15'	15'	None

Refer to Variance Request and Landscape Plan(s) for additional information on perimeter buffers provided.

PARKING AND DRIVE-ISLE WIDTH:

In accordance with Section: 34-1329, the required quantity of parking for a Dental/Medical Office use is based on a ration of 1 parking space per 200SF of building area. The proposed Dental/Medical Office building is 4,977SF. The required minimum number of parking spaces is 25 (4,977SF/200SF=25 total Parking Required). The site has been designed to provide at total of 26 parking spaces, which includes 2 handicap parking spaces. The site plan has undergone several revisions and the engineer has worked with the property owner to reduce the size of the Dental Office building w/ Dental Lab as much as functionally possible.

Section: 34-1328 provides the minimum dimension required for parking drive-isles. The site has been designed to provide minimum drive-isle width for a 14' one-way drive isle which is located on the northern portion of the proposed building between the sidewalk along the side building façade and the parallel parking shown along the north property line. The parking areas along the west and east portions of the property do provide the required 26' wide drive-isle.

BIKE RACK:

Section: 34-1359(h) a bike rack is required. The calculation is as follows: One bike space for every 1,500 SF of building area. The building is 4.977SF, (4,977SF/1500SF = 3.32). The bike rack provided has been designed to include 5 bicycles. The bike rack has been located toward the northwest portion of the Dental Office building.

CONCLUSION

The owner's request to receive Development Review Site Plan approval is consistent with the Purposes and Intents of the Village of Palm Springs Development Ordinance/Zoning Code. The proposed site layout for the Dental/Medical Office with Dental Lab has been undergone several design options in the goal to comply with all the development standards as outlined by the Village of Palm Springs Development Ordinances/Zoning Code. However, due to the small somewhat irregular shape of the lot, some Variances had to be requested. These Variances are the minimum variances needed to allow for development of the proposed Dental/Medical Office with Dental Lab Use. Approval of the owner's Variance requests will allow the site to be developed in a manner consistent with other similar commercial uses, building heights and site designs in the immediate vicinity. Approval of the owner's request will allow the construction of a Dental/Medical Office building meets all purposes and intents of the Village of Palm Springs Development Ordinances/Zoning Code; this project is compliance with the Code to the greatest extent possible. For the site elements which are not in compliance with the Code, approval of the owner's Variance requests provide relief from portions of the Code, which; if not granted would cause a site to be undevelopable.

Variance Justification Statement

Variance Request and Justification:

The subject property is located at 1962 S. Military Trail and consists of .59 acres. The current Future Land Use is Commercial with a Zoning Designation of General Commercial (CG). The site is currently vacant and the are no records of any previous Development Orders approved on the property. The owner is proposing a Dental/Medical Office Use with internal Dental Lab. Atlantic Engineering Services (Engineer/Developer) has

worked through several potential design patterns for the subject site in the attempt to meet all provisions of the Village of Palm Springs Development Ordinances/Zoning Code for the proposed Dental/Medical Office Use. The final design is the most logical design that complies with the provision of the Code to the greatest extent possible, except:

- Variance - ROW Buffer (North)
- Variance – Side Setback (South)
- Variance – Sign Height

On behalf of the property owner (Vaani Real Estate LLC) we are requesting the following Variances:

Variance Chart				
	Codes Section	**Required**	**Provided**	**Variance**
V1	Section: 34-162 (ROW Buffer – North)	10' ROW Buffer	5.5' ROW Buffer	4.5'
V2	Section: 34-826(7) (Side Setback - South)	15' Side Setback	10' Side Setback	5'
V3	Section: 34-327(b)(1)	5' Height	6' Height	1'

Sign Variance – Five Criteria
(V#3)

1. Special and unique conditions exist which are peculiar to the applicant's case and which are not generally applicable to the property located within the zoning district or neighborhood involved, such as natural or manmade sight limitations from the public rights-of-way.

   Response: V.3 – Yes. The site is small for a commercial site. Although it does meet the minimum property development regulations for the minimum lot dimensions, the site is slightly irregularly shaped and as a result eliminates the possibility of being able to comply with all site element development dimensional criteria. Therefore, in order to maintain a sufficient distance from the vehicular overhang for cars parking along the most westerly parking stalls, the proposed sign location has to be setback 5' from the property line. In accordance with the Land Development Code, the sign height is based on the setback. In this case, a setback of 5' only permits a monument sign to be a maximum of 5' tall. Military Trail is a large, high-volume right-of-Way. A 5' high sign will not provide sufficient visibility for the proposed Dental Office Use. Therefore, a variance had to be requested to allow the sign to be a maximum of 6' tall instead of the required 5' maximum.

2. The special and unique conditions are not directly attributable to the actions of the applicant.

   Response: V.3, (Refer to Criteria #1). Any proposed use would require a Monument sign along Military Trail. Any proposed use on this .59ac site would not be able to meet all the Development

Ordinances/Zoning Code for all site elements; some variances would be necessary. From a design and life-safety and functionality of the site, the logical decision was to first focus on those elements, that are life-safety in nature and necessary for the efficiency of functional pedestrian and vehicular use for the site. Then we would request variance for those elements not as detrimental to life-safety or public welfare (i.e. signage height based on the available setbacks).

3. The literal interpretation of this article, as applied to the applicant, would deprive the applicant of rights commonly enjoyed by persons who are similarly situated.

   Response: V.3, - Yes. Denial of the owner's Variance request would deprive him of the same privileges as the adjacent property owners to the immediate south of the subject site. The Two parcel immediately south of the subject site have signs ranging from 10'-15' in height with similar setbacks. The original proposed sign height for the Dental office was 8'. Based on feedback from the Village of Palm Springs Staff, the proposed sign height has been reduced to 6' maximum height. ***(See Graphic Below)***

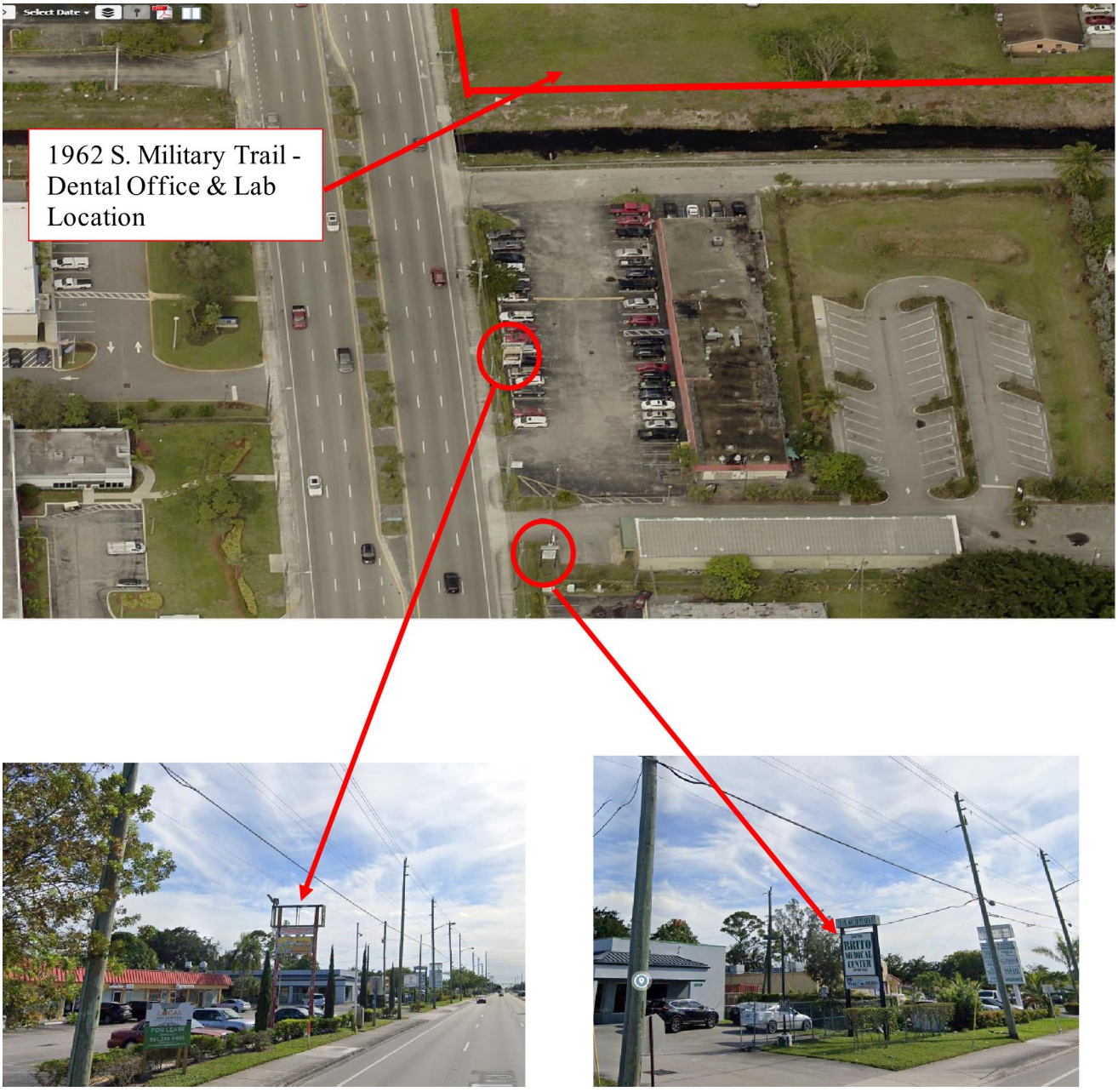

4. The variance granted is the minimum necessary for the application to make reasonable use of the property

***Response: V.3,* - Yes.** The site is small for a commercial site. Although it does meet the minimum property development regulations for the minimum lot dimensions, the site is slightly irregularly shaped along the north property line adjacent to Forest Hill Blvd. The small size of the lot eliminated he possibility of being able to comply with all site elements and site elements dimensional requirements on site. Therefore, in order to maintain a safe distance from vehicular overhang for cars parking along the most westerly parking stalls, a Variance is necessary to allow a 6' tall proposed sign to be setback 5' from the property line along Military Trail. (Refer also to Criteria#1, 2, & 3).

5. Granting the variance is not detrimental to the public welfare, or injurious to the property improvements in the zoning district or neighborhood involved.

Response: V.3 **– Yes.** Granting the owner's Variance request to allow the proposed sign height to be 6' along the property line adjacent to Military Trail would not be injurious to the public welfare or surrounding commercial or residential uses. Although the proposed monument sign will be taller than the 5' permitted by the Land Development Code, the sign is smaller than most of the other signs along the Military Trail Corridor for other commercial development. In addition, the proposed setback of 5' is not inconsistent with most other commercial signs along the Military Trail. (Refer to Criteria#3 w/ Graphic)

Variance Seven Criteria
(North Buffer (V.1) & Side Setback – South (V.2))

A. Special conditions and circumstances exist which are peculiar to the land, structure or building involved, and which are not applicable to other lands, structures or buildings in the same land development district.

Response: V.1 & V.2. - Yes. The subject site is .59ac, which is small for a commercial site. Although it does meet the minimum property development regulations for the minimum lot dimensions, the site is a narrow rectangular lot and is slightly irregularly shaped. The small size of the lot eliminated the possibility of being able to comply with all site elements, including minimum landscape buffer widths. Due to the site constrains, site design options are extremely limited. Therefore, the design considers life-safety and circulation as priority. As a result, there is not sufficient land area to redesign the site in a manner that would accommodate the minimum required 10' perimeter buffer for the North. See chart below for specific buffer variance requests for each buffer.

	Buffer Location	Required	Provided	Variance
1	North ROW Buffer	10'	5.5'	4.5'
2	South Buffer	15'	10'	None
3	West ROW Buffer	15'	15'	None
4	East Buffer	15'	15'	None

B. The special conditions and circumstances do not result from the actions of the applicant.

Response: V.1 & V.2 – Yes. The current property owner purchased the lot in December 2018. The rectangular, slightly irregularly shaped .62ac lot has been in its current configuration since prior to the current property owner's purchase. The site constraints are not a direct result of actions from the property owner. Any development of allowed by Code of similar size would have to meet the same development criteria. The small size and configuration of the lot eliminate the possibility of all site element development criteria to be met.

C. Granting the variance requested will not confer on the applicant any special privilege that is denied by this chapter to other lands, buildings or structures in the same land development district.

Response: V.1 & V.2 – Yes. – Correct. Granting the Owner's Variance will not confer upon the property owner any special privileges for the following reasons:

1. Although the variance request (V.1) to reduce the ROW Buffer (North) to 5.5' in width. There is still a minimum of 10' of planting along the North property line; 5.5' of planting g will be provided within the property line and the remaining 4.5' of landscaping will be provided immediately adjacent to the North property line along Line Drive.

2. Although the variance request (V.2) to reduce the Side (South) Setback to 10' instead of the required 15' does reduce the side setback by 5', this reduction will have no negative affect on the existing commercial plaza to the south. There is a 75' wide LWDD canal immediately adjacent to the south property line of the subject property, and the nearest commercial plaza is more than 130' from the subject property. Although a variance is being requested to reduce the side (south) setback, the entire side of the Dental Office building will be screened by a 10' landscape buffer.

D. Literal interpretation of the provisions of this chapter would deprive the applicant of rights commonly enjoyed by other properties in the same land development district under the terms of this chapter and would work unnecessary and undue hardship on the applicant.

Response: V.1 & V.2 – Yes. Denial of the variance requests from the buffer requests would cause the site to be undevelopable. Due to the small .62 acre site, the irregular shape of the lot, and the minimum building requirements of the Medical Office use, there is no other design alternative exists that would reduce or eliminate the need variances for the North buffer and the south setback *(Refer to Site Plan and landscape Plan & Final Site Plan; See Chart Below).*

	Buffer Location	**Required**	**Provided**	**Variance**
1	North ROW Buffer	10'	5.5'	4.5'
2	South Buffer	10'	10'	None
3	West ROW Buffer	15'	15'	None
4	East Buffer	15'	15'	None

E. The variance granted is the minimum variance that will make possible the reasonable use of the land, building or structure.

Response: V.1 & V.2 – Yes. (Refer to Criteria 1,2 & 3) The small site size, the irregular shape of the lot, and the minimum building requirements of the Medical Office use, there is no other design alternative exists that would reduce or eliminate the need variances for the North Buffer *(Refer to Site Plan and landscape Plan).* The Village of Palm Springs Development Code provides specific minimum requirements pertaining to:

- ❖ Building Setbacks
- ❖ Drive-isle Widths

- ❖ Sidewalk Dimensions
- ❖ Parking Dimensions
- ❖ Terminal Island Widths
- ❖ Truck Turning Radi for Trucks

In order to meet all the minimum required site element development standards the North ROW buffer width and the Side (south) Setback had to be reduced.

F. The grant of the variance will be in harmony with the general intent and purpose of this chapter.

Response: ***Response: V.1, V.2 – Yes,*** The Final Site Plan has undergone several revisions in our efforts to try to comply with all the development criteria outline in the Land Development Code and to meet the functional needs of the Dental Office Use. The only variances requested, are those that were not Life-Safety in nature and could not be meet. In order to meet all other Life-Safety design guidelines. The Variance requests for the reduction in the North ROW Buffer and the Variance for the Side (South) Setback causes no visual inconsistencies with other existing development along Military Trail corridor. The Site will still provide the minimum 10' of required buffer to the north and the reduction in the side (south) setback has no negative affect on the existing commercial plaza to the south. There is a 75' wide LWDD canal immediately adjacent to the south property line of the subject property, and the nearest commercial plaza is more than 130' from the subject property (See Below). Although a variance is being requested to reduce the side (south) setback, the entire side of the Dental Office building will be screened by a 10' landscape buffer. Therefore, Granting the owner's variance requests will be in harmony with the general intent and purpose of the Land Development Code.

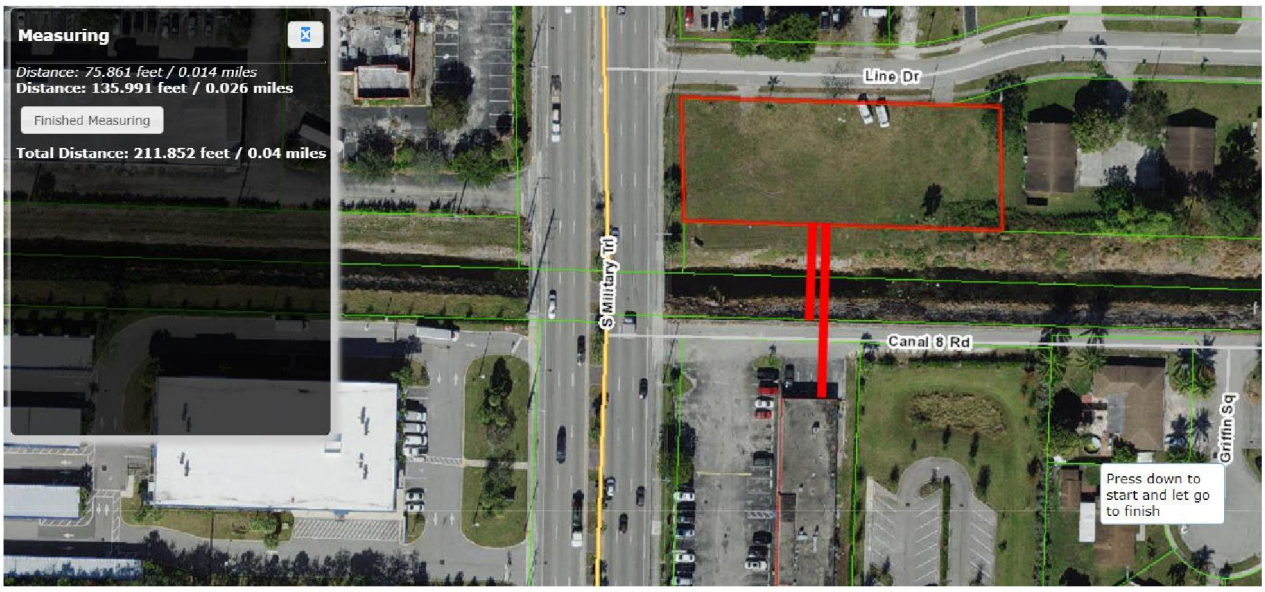

G. Such variance will not be injurious to the area involved or otherwise detrimental to the public welfare.

Response: ***Response: V.1, V.2 – Yes,*** Granting the owner's variance request will not be detrimental to the Public Welfare or Injurious to the surrounding properties or uses. Reference Chart and Variance Location Map below.

Variance #	Proposed	Variance Request	Reason Not Injurious or Detrimental
V1-North ROW Buffer	5.5'	4.5'	The original site design called for a 4.26 buffer with no landscape along the north property line along Line Drive. After meeting with the Doctor about how much the building can feasibly be reduced in size and still be operationally functional, the site has been redesigned by shrinking the proposed building from 8,834SF to 4,977SF. By narrowing the design of the proposed Dental Office, it allowed for a wider one-way drive-isle and slightly increased buffer width along Line Drive to 5.5'. Line Drive is a ROW along the North property line which, happens to be Village of Palm Springs Road. We propose 5' of additional landscape buffer be provided within the open space area of Line Drive on the south and north side of the existing sidewalk. Although the subject site is not large enough to accommodate the full 10' ROW Buffer within the boundary of the site, there will still be at least 10' minimum of landscaping provided between the proposed Dental/Medical Office Use and the adjacent Commercial/Office Use to the North. The approval of this Variance request would still provide all the required landscaping and enhance the esthetics of the surrounding area.
V-2 Side Setback (South)	10'	5'	Immediately south of the subject lot is a 75' LWDD Canal and 20' ROW (Canal 8 Road). The nearest commercial plaza to the south is more than 135' from the Dental Office project. Currently the subject site is vacant with people illegally using the property as a parking area for commercial vehicles without the property owner's knowledge. The proposed Dental Office building has already been reduced in size to the greatest extent possible in the attempt to comply will all the Village of Palm Springs site element requirements. Although we are requesting a 5' deviation from the minimum 15' setback requirement along the south property line, the required quantity of trees and landscaping will still be provided to screen the Dental Office building from the commercial plaza to the south. Therefore, there will be no negative effects on the commercial use to the south of the subject site as a result of the variance request.

In accordance with the provisions in Section: 34-329 (Sign Variances) and in Section: 43-603(b)(1) all variance criteria must be met. On behalf of Vaani Real Estate LLC, we respectfully request staff's support and approval of the, One (1) Sign Variance Request and the Two (2) variance requests listed above.

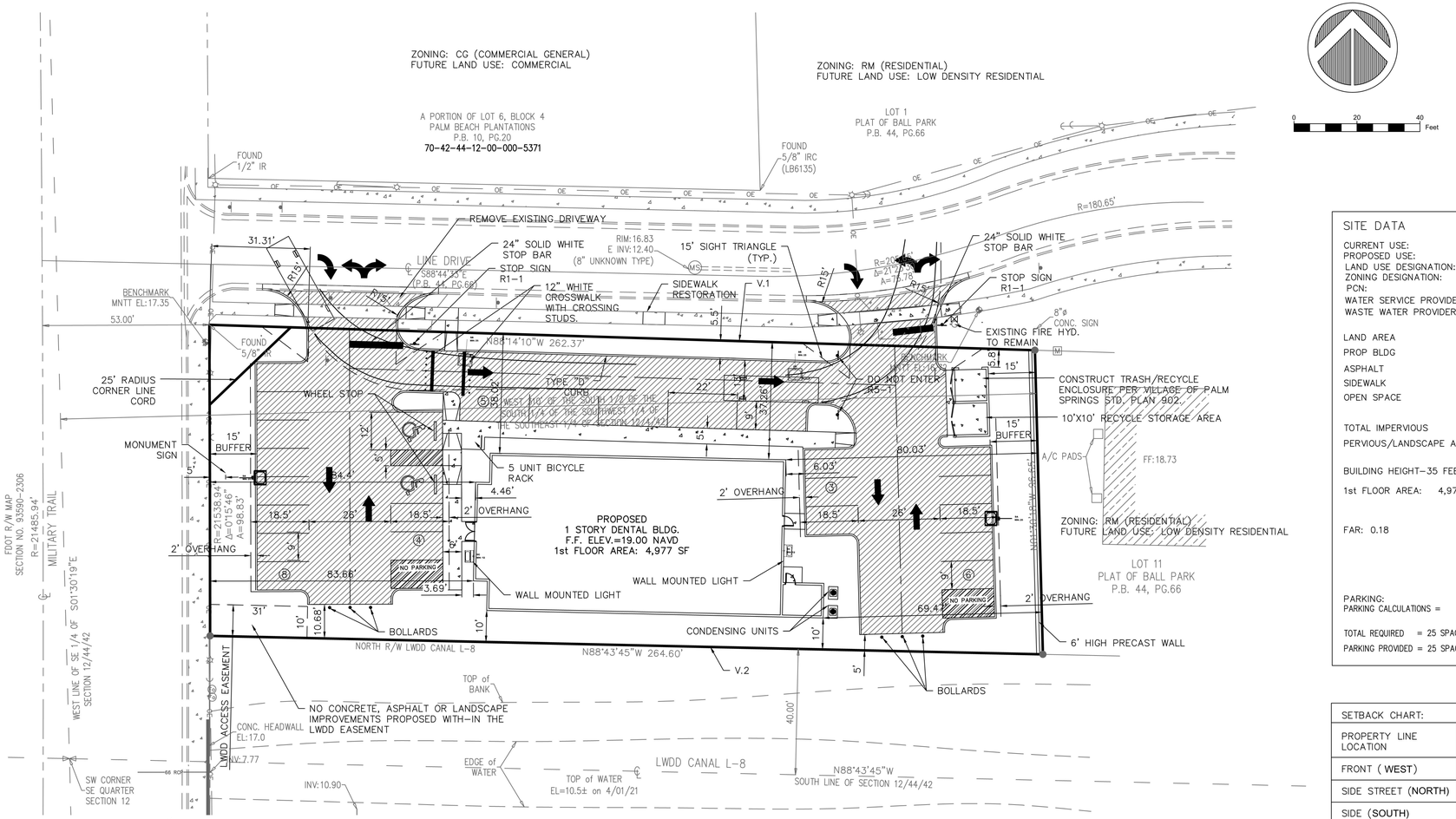

0 20 40 Feet

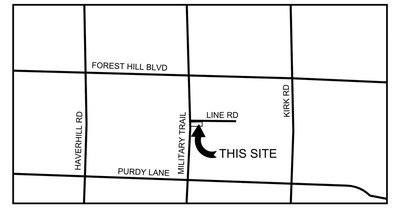

LOCATION MAP

SITE DATA

CURRENT USE:	VACANT		
PROPOSED USE:	MEDICAL OFFICE		
LAND USE DESIGNATION:	COMMERCIAL		
ZONING DESIGNATION:	CG (COMMERCIAL)		
PCN:	70-42-44-12-00-000-5380		
WATER SERVICE PROVIDER: PALM SPRINGS			
WASTE WATER PROVIDER: PALM SPRINGS			
	SQ. FT.	ACRES	PERCENTAGE
LAND AREA	25,730.40	0.59	100
PROP BLDG	4,977	0.11	19.34
ASPHALT	11,534	0.26	44.83
SIDEWALK	955	0.02	3.71
OPEN SPACE	6,214.40	0.14	15 REQ. 24.15 PROVIDED
TOTAL IMPERVIOUS	17,466	0.40	67.88
PERVIOUS/LANDSCAPE AREA	8,264.40	0.19	32.12

BUILDING HEIGHT-35 FEET MAX

1st FLOOR AREA: 4,977 SF

FAR: 0.18

PARKING:
PARKING CALCULATIONS = 1 SPACE PER 200 SQ.FT.= 25

TOTAL REQUIRED = 25 SPACES

PARKING PROVIDED = 25 SPACES INCLUDES 2 HANDICAP SPACE

SETBACK CHART:		
PROPERTY LINE LOCATION	REQUIRED	PROVIDED
FRONT (WEST)	50'	83.66
SIDE STREET (NORTH)	25'	38.02
SIDE (SOUTH)	15'	10' (V.2)
REAR (EAST)	20'	69.47

FOUNDATION PLANTING CHART			
WEST	FRONT	5' WIDE	88%
NORTH	SIDE	5' WIDE	100%
EAST	REAR	5' WIDE	76%
SOUTH	SIDE	5' WIDE	100%

FOUNDATION PLANTING PERCENTAGE PER EACH FACADE

NOTE:

1. THE PROPERTY IS WITHIN THE C51 BASIN.
2. SIDE (SOUTH) SETBACK OF PERMITTED PER VARIANCE (SEE VARIANCE CHART BELOW)

VARIANCE CHART				
	CODE SECTION	REQUIRED	PROVIDED	VARIANCE
V1	SECTION: 34-162 (ROW BUFFER-NORTH)	10' ROW BUFFER	5.50' ROW BUFFER	4.50'
V2	SECTION: 34- 826(7) (SIDE SETBACK)	15' SIDE SETBACK	10' SIDE SETBACK	5'
V3	SECTION 34-327.b1 (SIGN SETBACK)	11' SETBACK	5' SETBACK	6'



ELEVATION

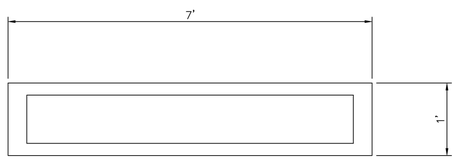

PLAN VIEW

NOTE:

MAX SIGN-FACE AREA = 13.37 SF PER SIDE.
TOTAL SIGN-FACE AREA= 26.74 SF

MONUMENT SIGN DETAIL
IDENTICAL BOTH SIDES

SITE PLAN

REV.	DESCRIPTION	DATE
1		
2		
3		
4		
5		
6		

IMTIAZ AHMED, P.E.
LICENSED ENGINEER NO. 46102
STATE OF FLORIDA

SEAL

DENTAL OFFICE
1962 S. MILITARY TRAIL
PALM SPRINGS, FLORIDA 33415

ATLANTIC ENGINEERING SERVICES, INC.
2822 WATERS EDGE CIRCLE
GREENACRES, FLORIDA 33413
PHONE - (561) 358-4140
FAX - (561) 966-9242
CERTIFICATE OF AUTHORIZATION NO.: 9390

PROJ. NO. 0000
SCALE: AS SHOWN

DES.	DWN.	CHK.

SHEET NUMBER
SP1

DATE DRAWN
JULY, 2021

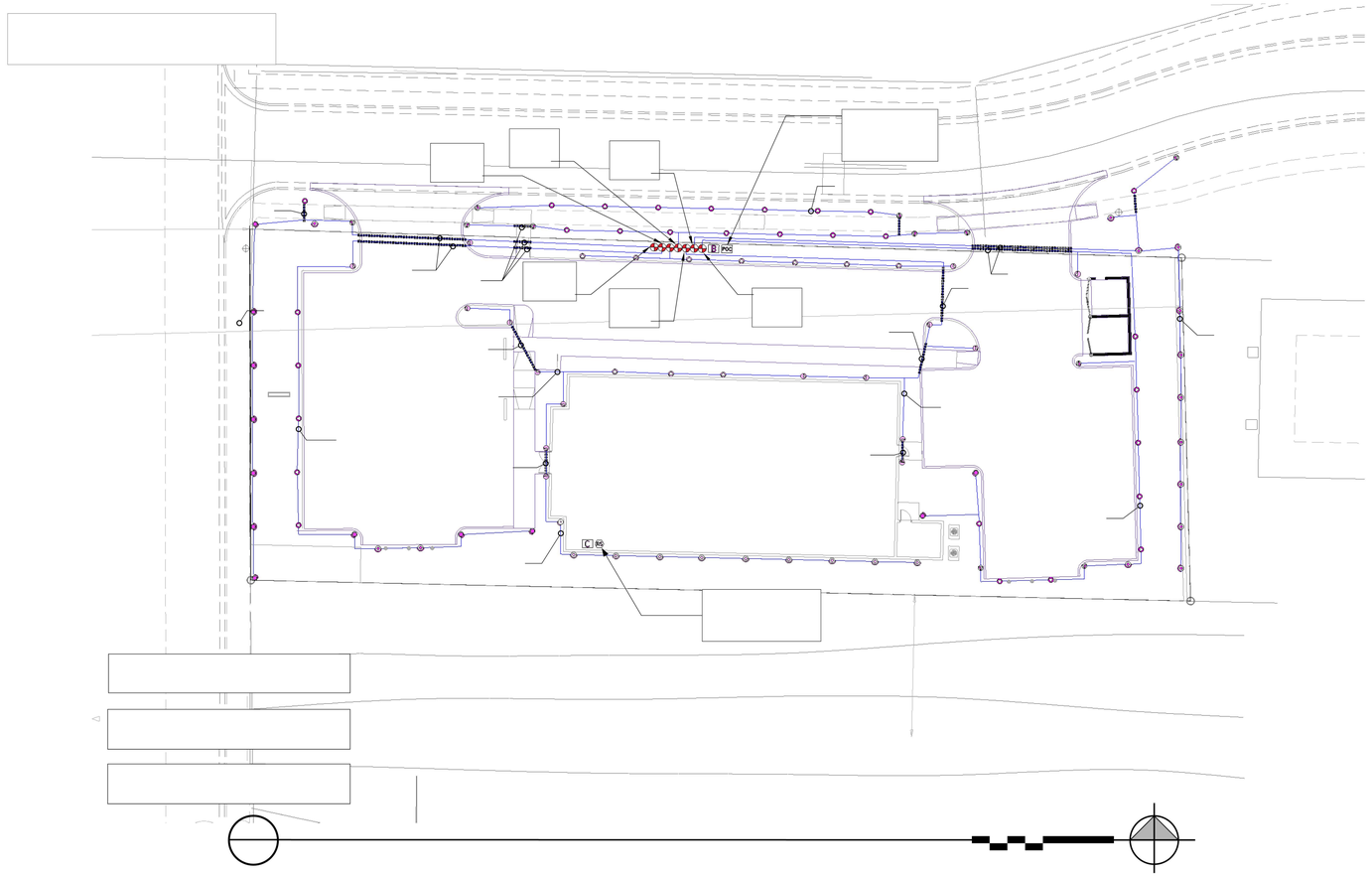

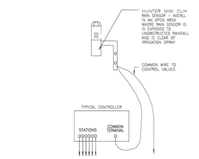

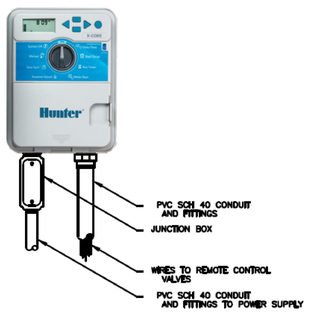

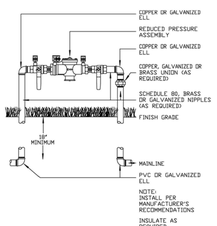

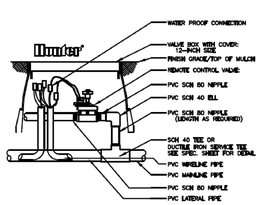

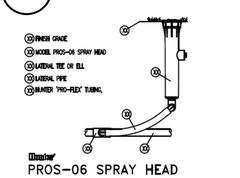

THIS SYSTEM HAS BEEN DESIGNED AND SHALL BE INSTALLED IN ACCORDANCE WITH ALL THE REQUIREMENTS OF APPENDIX F, CONSTRUCTION AND BUILDING CODES FOR TURF AND LANDSCAPE IRRIGATION SYSTEMS, OF THE FLORIDA BUILDING CODE.

PIPE COVER DEPTH

VEHICLE TRAFFIC AREAS

Pipe Size (inches)	Depth of Cover (inches)
1/2 - 2 1/2	18 - 24
3 - 5	24 - 30
6 and larger	30 - 36

NON-TRAFFIC AND NON-CULTIVATED AREAS

Pipe Size (inches)	Depth of Cover (inches)
1/2 - 1 1/4	6 - 12
1 1/2 - 2	12 - 18
2 1/2 - 3	18 - 24
4 and larger	24 - 26

POC					
B					
C					
RS					

————					
==========					

ATLANTIC ENGINEERING SERVICES, INC.
200 C2 CROSSWINDS DRIVE
WEST PALM BEACH, FLORIDA 33413
PHONE – (561) 358-4140
FAX – (561) 966-9242
CERTIFICATE OF AUTHORIZATION NO.: 9390

LANDSCAPE ARCHITECT
LA 6666892
STATE OF FLORIDA

811
Know what's below.
Call before you dig.

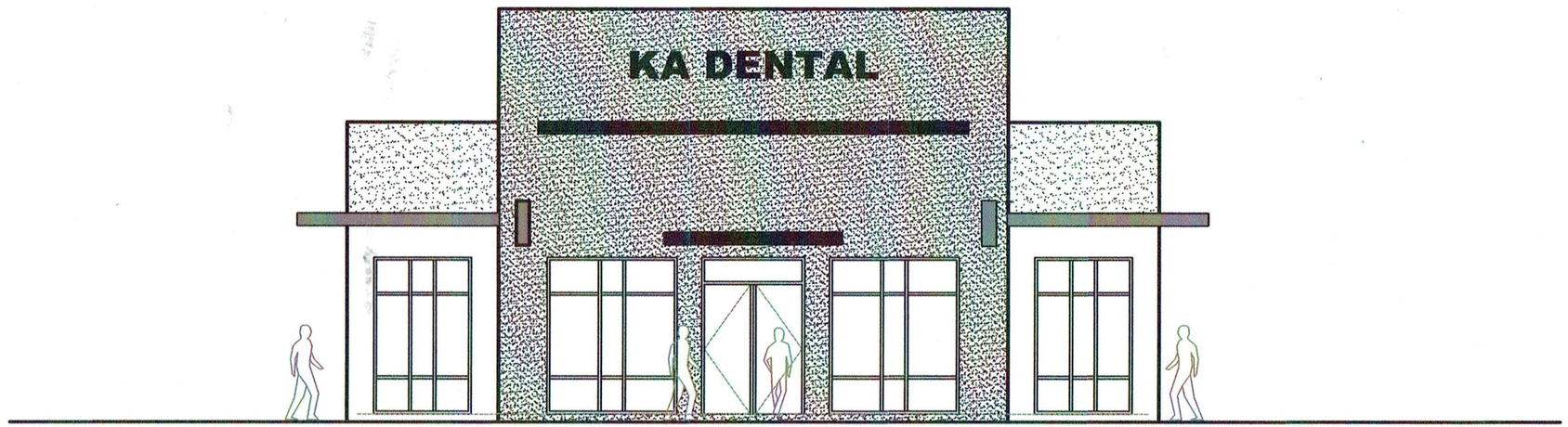

1/A3 FRONT ELEVATION (WEST)

SCALE: 1/4" = 1'-0"

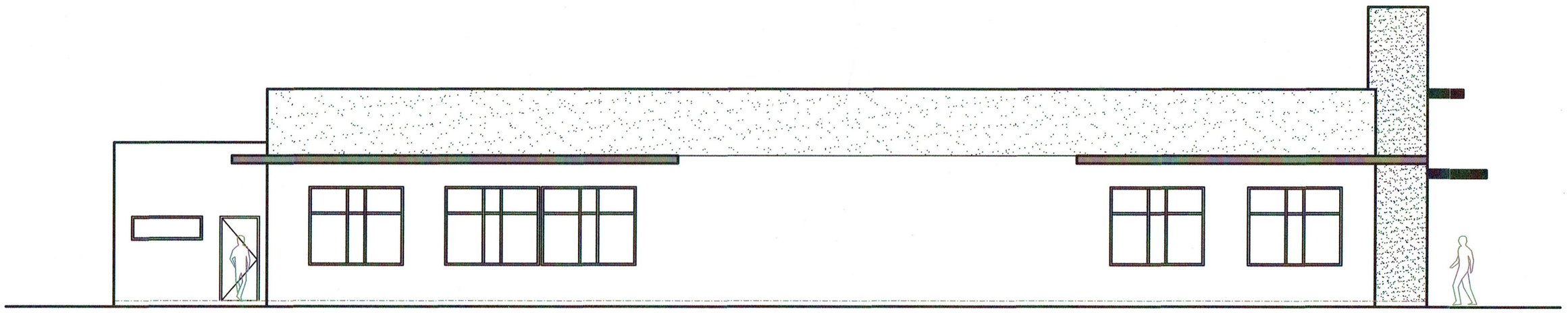

2/A3 LEFT ELEVATION (NORTH)

SCALE: 1/4" = 1'-0"

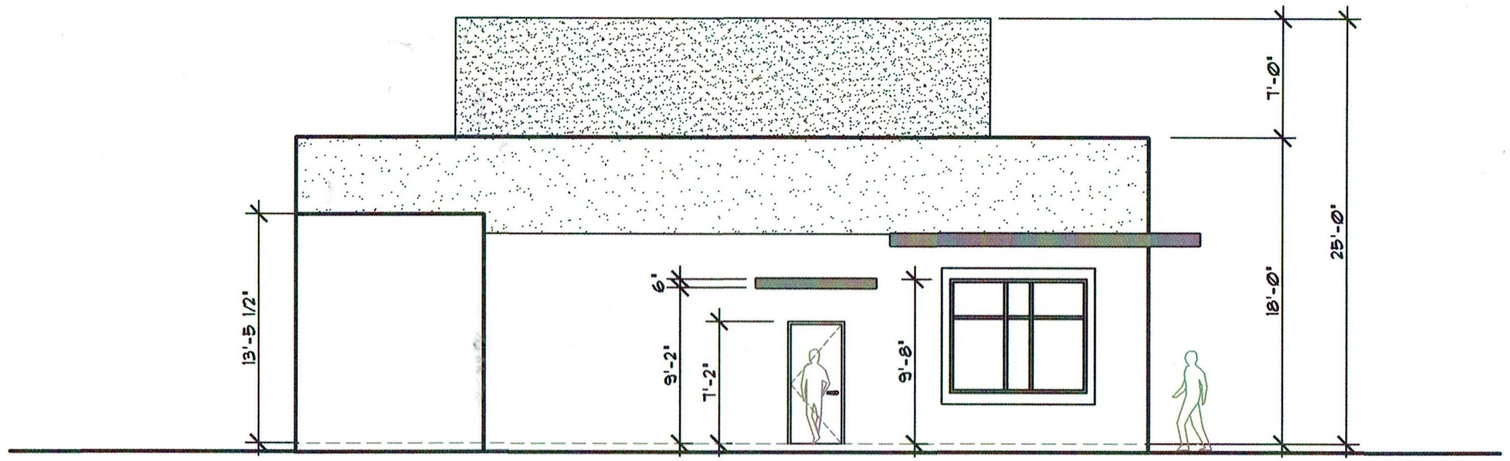

1/A3 **REAR ELEVATION (EAST)**
SCALE: 1/4" = 1'-0"

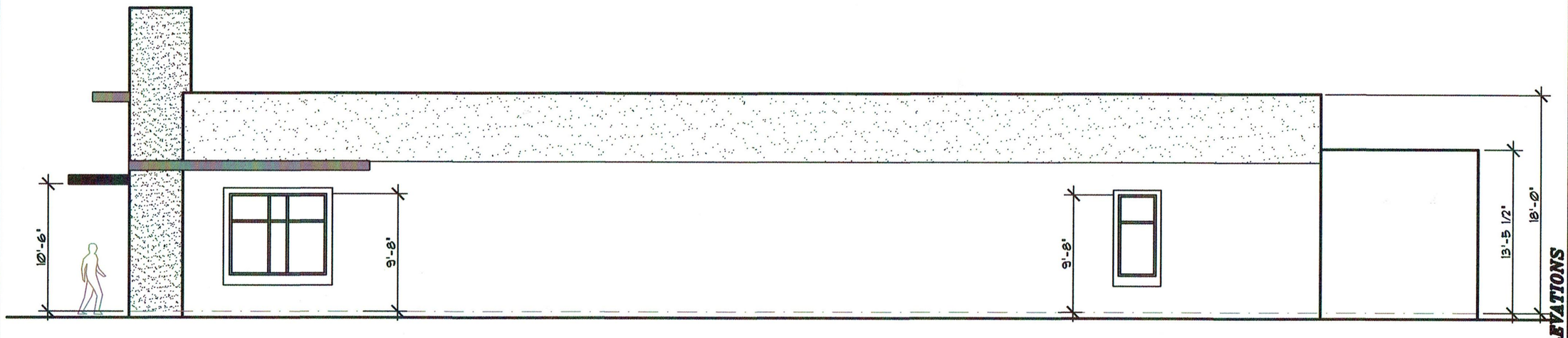

2/A3 **RIGHT ELEVATION (SOUTH)**
SCALE: 1/4" = 1'-0"

REAR & RIGHT ELEVATIONS

REV.	DESCRIPTION	DATE
1		
2		
3		
4		
5		
6		

IMTIAZ AHMED, P.E.
LICENSED ENGINEER NO. 46102
STATE OF FLORIDA

SEAL

KA DENTAL
1962 SOUTH MILITARY TRAIL
PALM SPRINGS, FL 33415

ATLANTIC ENGINEERING SERVICES, INC.
2822 WATERS EDGE CIRCLE
GREENACRES, FLORIDA 33413
PHONE - (561) 358-4140
FAX - (561) 966-8242
CERTIFICATE OF AUTHORIZATION NO.: 9390

PROJ. NO. 0000
SCALE: AS SHOWN

DES	DWN	CHK
	ddt	

SHEET NUMBER
A3
10/13/21
DATE DRAWN

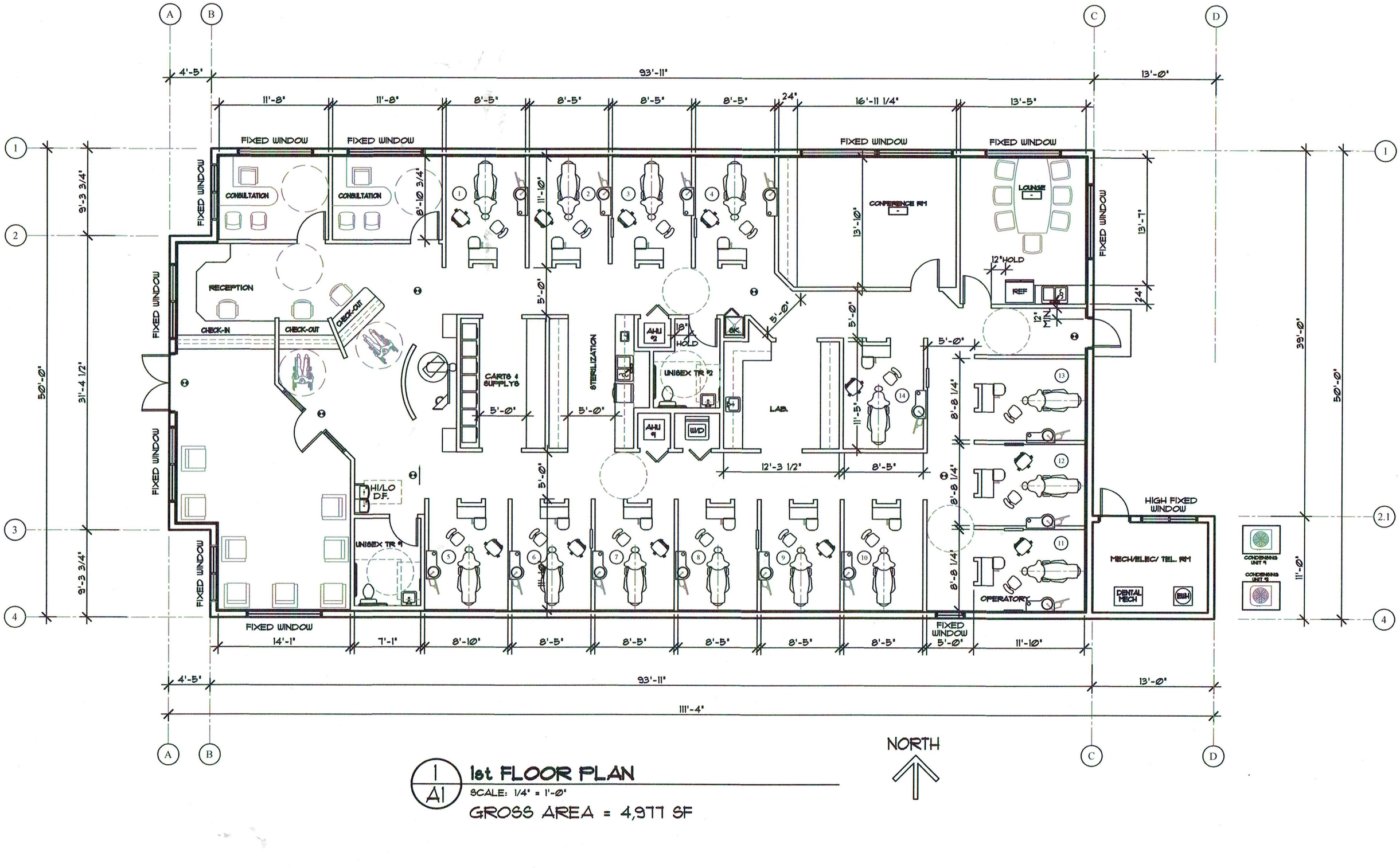

1/A1 1st FLOOR PLAN

SCALE: 1/4" = 1'-0"

GROSS AREA = 4,977 SF

NORTH

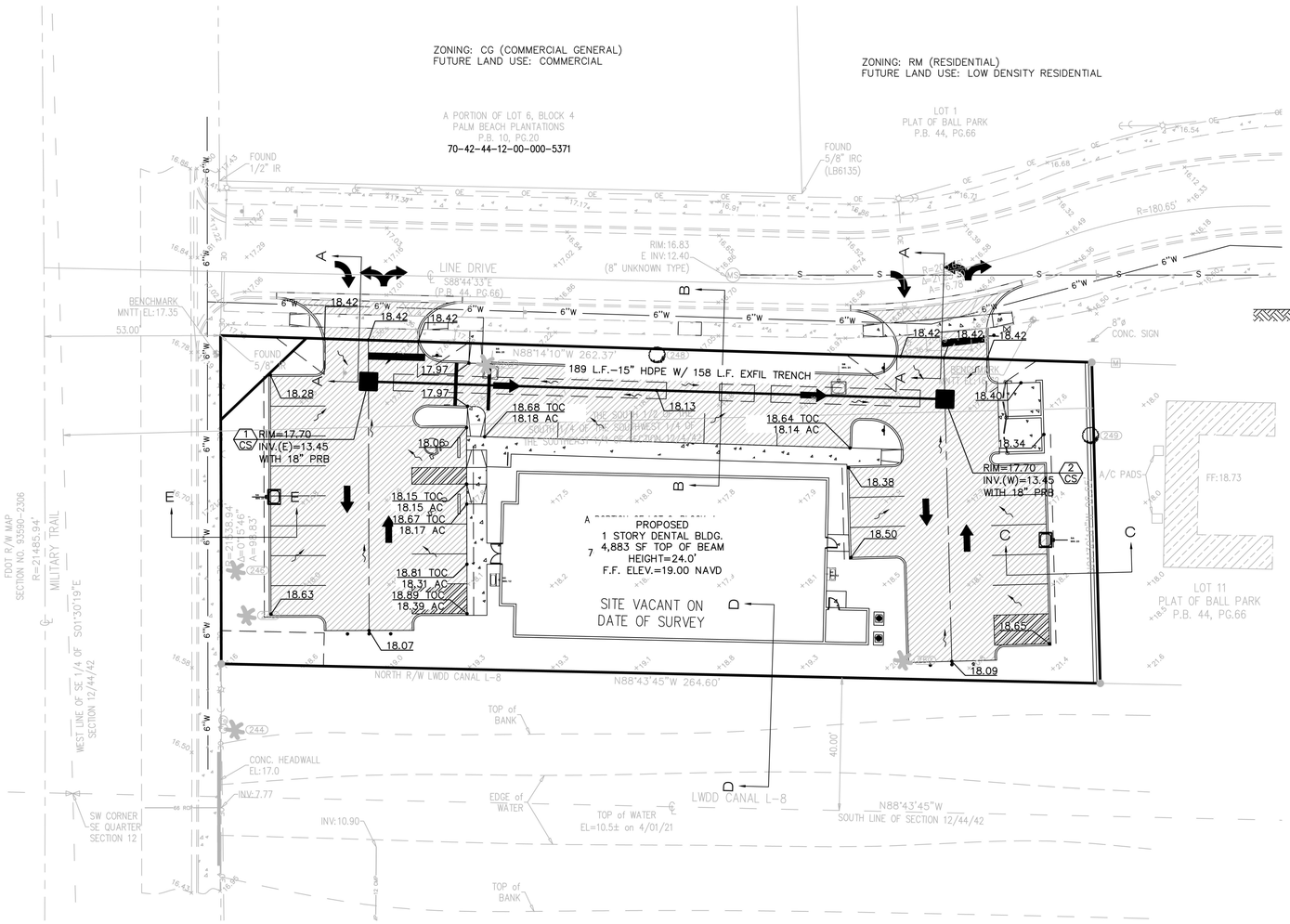

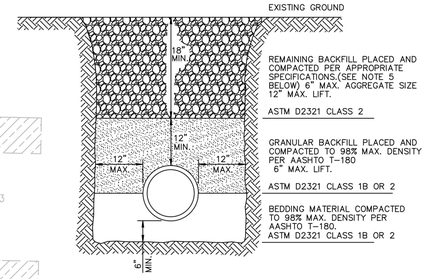

TYPICAL TRENCH DETAIL

NOTES:

1. UNSUITABLE IN-SITU MATERIALS SUCH AS MUCK, DEBRIS AND LARGE ROCKS SHALL BE REMOVED; BEDDING MATERIAL AND BACKFILL CONSISTING OF WASHED AND GRADED LIMEROCK 3/8" -7/8" SIZING.
2. THE PIPE SHALL BE FULLY SUPPORTED FOR ITS ENTIRE LENGTH WITH APPROPRIATE COMPACTION UNDER THE PIPE HAUNCHES.
3. THE PIPE SHALL BE PLACED IN A DRY TRENCH.
4. BACKFILL SHALL BE FREE OF UNSUITABLE MATERIAL SUCH AS LARGE ROCK, MUCK, AND DEBRIS.
5. COMPACT BACKFILL TO 98% DENSITY UNDER PAVEMENT AND TO 95% DENSITY ELSEWHERE.(AASHTO T-180)
6. COMPACTION AND DENSITY TESTS SHALL BE COMPLETED DURING BACKFILL OPERATIONS, CONTRACTORS NOT FOLLOWING THIS PROCEDURE, FOR WHATEVER REASONS, SHALL BE REQUIRED TO RE-EXCAVATE THE AREA IN QUESTION, DOWN TO THE BEDDING MATERIAL, THEN BACKFILL FOLLOWING THE ABOVE PROCEDURES.

ON-SITE PAVING AND DRAINAGE SPECIFICATIONS:

1. ALL ORGANIC OR DELETERIOUS MATERIAL SHALL BE REMOVED FROM WITHIN 5 FEET OF ANY EDGE OF PAVEMENT. ANY SUCH MATERIAL SHALL BE REPLACED BY APPROVED GRANULAR FILL WHICH SHALL BE PLACED AND IN ACCORDANCE WITH THE GEOTECHNICAL ENGINEERING REPORT FOR THE SITE.
2. STABILIZED SUBGRADE SHALL HAVE A LIMEROCK BEARING RATIO (LBR) OF 40 AND SHALL BE COMPACTED TO 98% OF MAXIMUM DENSITY AS DETERMINED BY AASHTO T-180.
3. LIMEROCK BASE COURSE SHALL CONFORM TO THE REQUIREMENTS OF SECTION 311 OF FLORIDA D.O.T. STANDARD SPECIFICATIONS. THE MINIMUM PERCENTAGE OF CARBONATES OF CALCIUM AND MAGNESIUM SHALL BE 70%, LIQUID LIMIT 35 PLASTICITY 6, MIN LBR 100 OR ACCEPTABLE FDOT PRODUCT APPROVAL
4. ASPHALTIC CONCRETE TYPE S-3 SHALL CONFORM TO THE REQUIREMENTS OF SECTION 331 OF FLORIDA D.O.T. STANDARD SPECIFICATIONS.
5. PRIME COAT AND TACK COAT FOR BASE COURSES SHALL CONFORM TO THE REQUIREMENTS OF SECTIONS 300-1 THROUGH 300-7 OF FLORIDA D.O.T. STANDARD SPECIFICATIONS. PRIME COAT SHALL BE APPLIED AT A RATE OF 0.25 GALLONS PER SQUARE YARD AND TACK COAT AT A RATE OF 0.08 GALLONS PER SQUARE YARD UNLESS A VARIATION RATE IS APPROVED BY THE ENGINEER.
6. ALL CONCRETE SHALL HAVE A MINIMUM COMPRESSIVE STRENGTH OF 3000 PSI AT 28 DAYS, EXCEPT DRAINAGE STRUCTURES.
7. PRECAST CONCRETE MANHOLES AND CATCH BASINS SHALL MEET THE REQUIREMENTS OF A.S.T.M. SPECIFICATIONS C-478 AND 647.
8. CONCRETE FOR PRECAST MANHOLES AND CATCH BASINS SHALL HAVE MINIMUM COMPRESSIVE STRENGTH OF 4000 PSI AT 28 DAYS.
9. REINFORCING STEEL FOR MANHOLES AND CATCH BASINS SHALL CONFORM TO A.S.T.M. SPECIFICATIONS A-615 AND A-305, LATEST REVISION. GRADE 60 STEEL SHALL BE USED FOR TOP AND BOTTOM SLABS.
10. ALL RE-BAR SPLICES IN CONCRETE STRUCTURES SHALL HAVE A MINIMUM LAP OF 24 BAR DIAMETERS.
11. ALL JOINTS IN CONCRETE STRUCTURES SHALL BE FINISHED WATER TIGHT.
12. ALL SPACES AROUND PIPING ENTERING OR LEAVING MANHOLES AND CATCH BASINS SHALL BE COMPLETELY FILLED WITH 2:1 WATERPROOF, NON-SHRINKING CEMENT MORTAR.
13. REINFORCED CONCRETE PIPE (RCP) SHALL CONFORM TO THE REQUIREMENTS OF A.S.T.M. SPECIFICATION C-76, FOR CLASS III, WALL THICKNESS "B" REINFORCED CONCRETE PIPE, AND AS MODIFIED IN SECTION 941 OF FLORIDA D.O.T. STANDARD SPECIFICATION.
14. CORRUGATED METAL PIPE SHALL CONFORM TO THE REQUIREMENTS OF SECTION 945 OF FLORIDA D.O.T. STANDARD SPECIFICATIONS.
15. PVC DRAINAGE PIPE SHALL CONFORM TO THE REQUIREMENTS OF SECTION 945 OF FLORIDA D.O.T. STANDARD SPECIFICATIONS.
16. HDPE PIPE SHALL BE ADS N-12 OR APPROVED EQUAL.
17. ALL LABOR, MATERIALS AND METHODS OF CONSTRUCTION SHALL BE IN STRICT ACCORDANCE WITH THE MINIMUM ENGINEERING AND CONSTRUCTION STANDARDS ADOPTED BY VILLAGE OF PALM SPRINGS PUBLIC WORKS AND THE PLANS AND CONSTRUCTION SPECIFICATIONS. WHERE CONFLICTS OR OMISSIONS EXIST, THE VILLAGE OF PALM SPRINGS PUBLIC WORKS STANDARDS SHALL DICTATE. SUBSTITUTIONS AND DEVIATIONS FROM PLANS AND SPECIFICATIONS SHALL BE PERMITTED ONLY WHEN WRITTEN APPROVAL HAS BEEN ISSUED BY THE ENGINEER.
18. THE EXISTING ELEVATIONS SHOWN ON THE GRADING PLAN INDICATES THE ELEVATION AT THE POINT DEPICTED ONLY, AND SHOULD NOT BE INTERPRETED AS INDICATING THE ELEVATIONS OF ANY OTHER POINT. THESE EXISTING ELEVATIONS ARE IN NO WAY AN INDICATOR OF SURFACE OR SUBSURFACE SOIL CONDITIONS.
19. BITUMINOUS COATING REQUIRED FOR ALL CORRUGATED METAL PIPE (CMP).

EROSION CONTROL

1. STABILIZATION PRACTICES

WHERE CONSTRUCTION OF FILL STOCKPILES ADJACENT TO CONSTRUCTION ACTIVITISE CEASES FOR AT LEAST 7 DAYS, THE SIDES WILL BE STABILIZED BY SEEDING AND MULCHING IN ACCORDANCE WITH THE FLORIDA DEPARTMENT OF TRANSPORTATION STANDARD SPECIFICATIONS FOR ROAD AND BRIDGE CONSTRUCTION 1991, SECTION 570. SEED AND MULCH SHALL BE APPLIED NO LATER THAN 7 DAYS FROM THE LAST CONSTRUCTION ACTIVITY IN THE AREA.

2. PERMANENT STABILIZATION

ALL LANDSCAPING, INCLUDING SODDING, SHALL BE INSTALLED ON THE PERIMETER LANDSCAPE BERMS IN ACCORDANCE WITH THE APPROVED LANDSCAPE PLAN WITHIN 14 DAYS OF THE LAST CONSTRUCTION ACTIVITY IN THE LANDSCAPE BUFFER AREAS.

3. OFF-SITE VEHICLE TRACKING

A STABILIZED CONSTRUCTION ENTRANCE CONSISTING OF MINIMUM 4" COMPACTED LIMEROCK BASE WILL BE CONSTRUCTED AS SOON AS CONSTRUCTION STARTS TO REDUCE THE AMOUNT OF VEHICLE TRACKING FROM THE SITE. THE PAVED STREET ADJACENT TO THE CONSTRUCTION ENTRANCE WILL BE SWEPT ON A REGULAR BASIS TO REMOVE ANY ACCUMULATION OF DIRT OR ROCKS WHICH HAVE BEEN TRACKED FROM THE SITE. ALL DUMP TRUCKS BRINGING MATERIAL TO, OR LEAVING THE SITE WILL BE COVERED WITH A TARPAULIN.

4. EROSION AND SEDIMENT CONTROL, INSPECTION AND MAINTENANCE PRACTICES

* ALL CONTROL MEASURES WILL BE INSPECTED AT LEAST ONCE WEEKLY AND FOLLOWING ANY STORM EVENT GREATER THAN 1/2".
* REPAIRS WILL BE COMPLETED WITHIN 24 HOURS.
* THE PERIMETER SWALES WILL BE INSPECTED REGULARLY AND REGRADED AS NECESSARY TO REMOVE THE BUILT UP SEDIMENT.
* TEMPORARY SEED AND MULCH AREAS AND PERMANENT SOD AREAS WILL BE INSPECTED REGULARLY FOR BARE SPOTS AND TO ENSURE ADEQUATE GROWTH.
* TURBIDITY SCREENS SHALL BE INSPECTED REGULARLY, AND REPAIRED AS NECESSARY.
* FILTER FABRIC SHALL BE SECURED IN ALL CATCH BASINS UNTIL COMPLETION OF CONSTRUCTION.

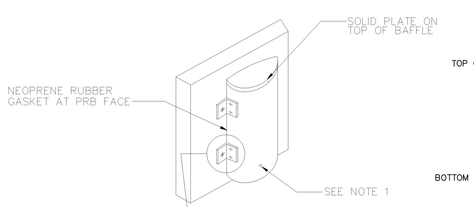

BAFFLE DETAIL

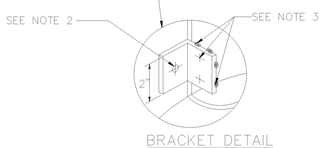

BRACKET DETAIL

NOTES FOR P.R.B. BASIN

1) BAFFLE TO BE A SECTION OF CMP CUT IN HALF.CMP PIPE FOR BAFFLE SHALL BE THE NEXT LARGER PIPE SIZE THAN "D".
2) 1/2 " GALVANIZED LAG BOLT IN LEAD SHIELD (TYP.)
3) WELD OR 2 - 1/2 " THRU BOLTS (S.S.).
4) GRATING SHALL BE OFFSET IF STRUCTURE IS USED AS OVERFLOW.

POLLUTION RETARDANT BAFFLE DETAIL

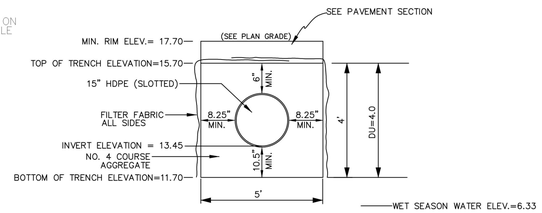

ONSITE EXFILTRATION TRENCH DETAIL

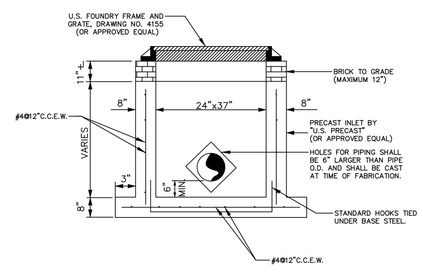

TYPE "CS" DITCH BOTTOM INLET

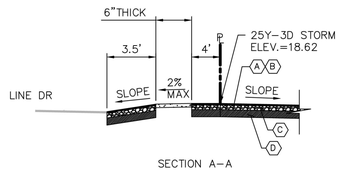

SECTION A-A

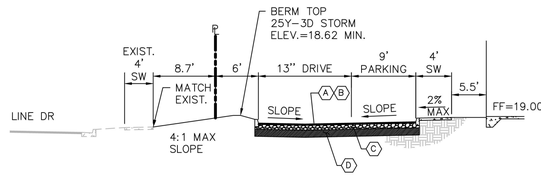

SECTION B-B

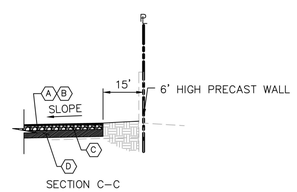

SECTION C-C

Ⓐ (2) 3/4" THICK LIFTS OF ASPHALTIC CONCRETE TYPE S-III

Ⓑ PRIME AND TACK COAT

Ⓒ 8" LIMEROCK BASE COMPACTED TO 98% MAX DENSITY AASHTO T-180

Ⓓ 12" SUBGRADE COMPACTED TO 98% MAX DENSITY AASHTO T-180,STABILIZE TO LBR 40 OR MIN. 50 PSI FBV.

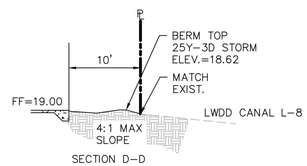

SECTION D-D

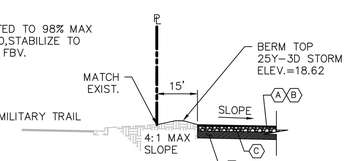

SECTION E-E

PAVING AND GRADING PLAN

REV.	DESCRIPTION	DATE
1		
2		
3		
4		
5		
6		

IMTIAZ AHMED, P.E.
LICENSED ENGINEER NO. 46102
STATE OF FLORIDA

SEAL

DENTAL OFFICE
1962 S. MILITARY TRAIL
PALM SPRINGS, FLORIDA 33415

ATLANTIC ENGINEERING SERVICES, INC.
2822 WATERS EDGE CIRCLE
GREENACRES, FLORIDA 33413
PHONE - (561) 358-4140
FAX - (561) 967-0242
CERTIFICATE OF AUTHORIZATION NO.: 9390

PROJ. NO. 0000
SCALE: AS SHOWN

DES.	DWN.	CHK.

SHEET NUMBER
CE1
DATE DRAWN
OCT. 2021

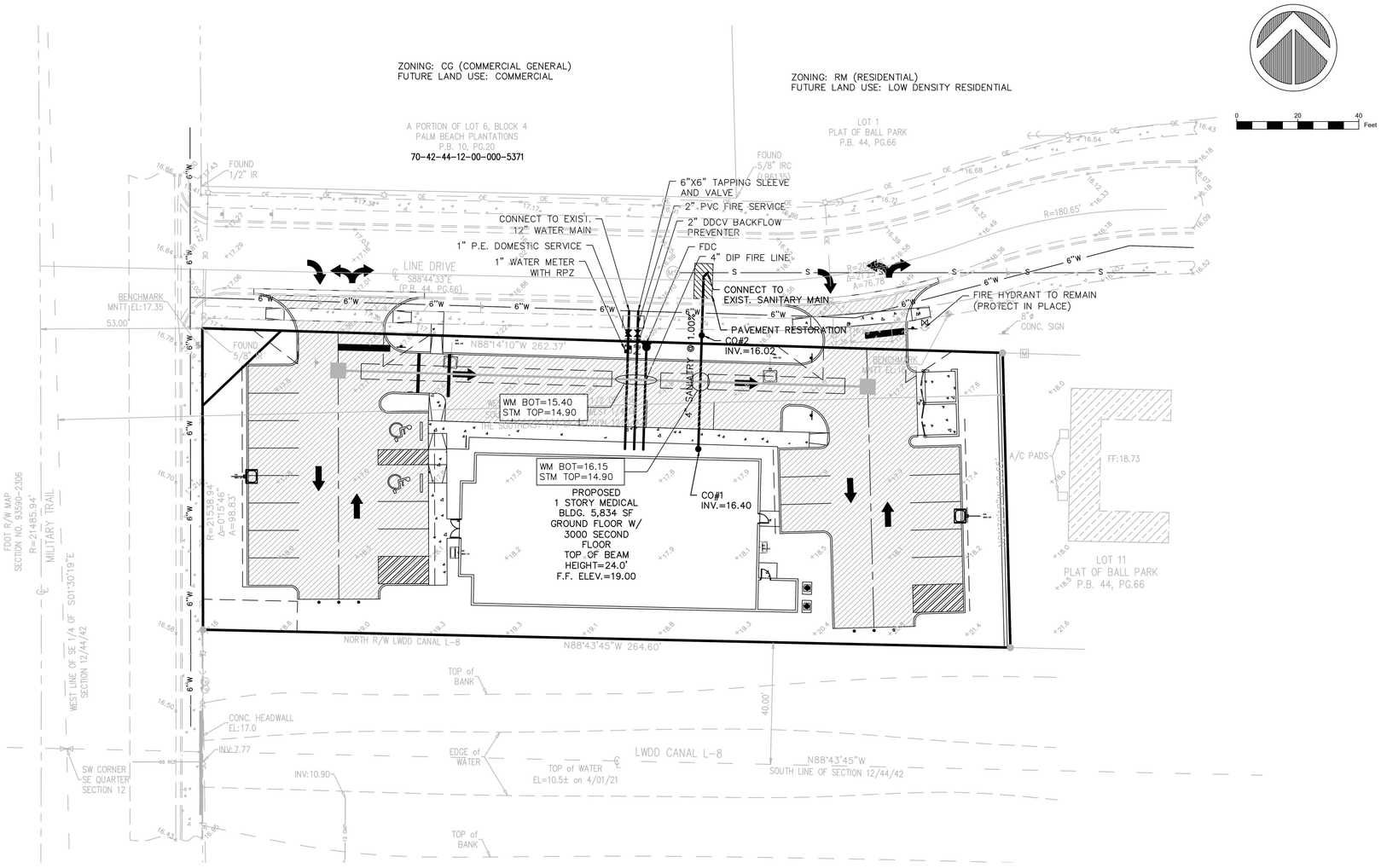

NOTE:

ALL VILLAGE UTILITIES STANDARDS AS APPLICABLE SHALL BE FOLLOWED FOR CONSTRUCTION OF UTILITIES CONNECTED TO THE VILLAGE'S SYSTEM AND/OR INSTALLED IN THE ROW.

1

WATER SYSTEM NOTES

1. Ductile Iron water main pipe shall conform to the requirements of A.N.S.I./ A.W.W.A. C-151/A 21.51-02 and lined and coated per A.N.S.I./A.W.W.A. C-104/A-214-03. 20" and smaller pipe shall be pressure class 350; 24" and larger, pipe shall be pressure class 250.
2. All P.V.C. mains shall be series 1120, class 150 (DR 18) pressure pipe, conforming to A.N.S.I./A.W.W.A. C-900-97, or latest revision, and shall have push on joints, and iron pipe O.D.
3. Fittings shall be ductile iron meeting A.N.S.I./A.W.W.A. C153/21.00 and shall be coated with 6 to 8 mil. Thickness coal tar epoxy conforming to the requirements of A.N.S.I./A.W.W.A. C550-01 and C116/A21.03.
4. Tapping valves shall be Mueller H667 or approved equal.
5. Gate valves 3" or less shall be NIBCO T-133 OR T-136 with malleable hand wheels. No substitutions allowed.
6. Tapping sleeves shall be Mueller H615 or approved equal.
7. Restrained joint pipe shall be used for all bends, tees, crosses, plugs, and fire hydrants. Thrust blocks shall not be allowed.
8. All valves shall be furnished with extension type cast iron valve boxes of proper length for pipe depth. All boxes shall conform with A.W.W.A. specifications with a shaft of no less than 5 inches and have the word "WATER" cast in the cover. Base of valve box shall have a flared section to fit over stuffing box of valve.
9. Gate valves 4" or larger shall meet A.W.W.A. C-500-02 specification (latest revision). Valves shall be Mueller Co. or approved equal.
10. Fire hydrants shall be breakaway Mueller Co. Centurion model #A-423, or Metropolitan 250 Eddy Compression type F.H. or approved equal.
11. Fire hydrants shall be installed with the center of the nozzle 18" above finished grade.
12. All meter service connections shall be bronze from plug valve. No gate valves are to be used (2" or less).
13. The Village will take all bacteriological tests, to be scheduled via inspector. If otherwise specified in contract detailed specification and/or authorized by the engineer of record, bacteriological tests may be performed by a certified environmental testing laboratory.
14. All connections to existing mains shall be made under the direction of the Village
15. Pipe shall be tested under constant pressure of 150 P.S.I. for a minimum test period of 2 hours and shall not exceed the leakage requirements as per A.N.S.I./A.W.W.A. specifications of C-600-99 leakage formula: $Q = LD \times \text{SQUARE ROOT OF } P/148{,}000$
    Q = QUANTITY OF MAKEUP WATER (IN GALLONS PER HOUR)
    L = LENGTH OF PIPE SECTION BEING TEST (IN FEET) √
    D = NOMINAL DIAMETER OF THE PIPE (IN INCHES)
    P = AVERAGE TEST PRESSURE, IN POUNDS PER SQUARE INCH.
16. The minimum depth of cover over water mains is 36" except where shown differently on plans.
17. Disinfection of mains shall comply with A.N.S.I./A.W.W.A. C-651-05 standard. Bacteriological sampling points shall be designated on the engineering plans. Minimum one sampling point at each end. Maximum space between sampling points is 1500 feet.
18. Dead-end water mains 6" or larger shall terminate with a fire hydrant.
19. There shall be no connection to an existing water main until pressure and bacteriological tests have been conducted and the results are approved and accepted by the Village.
20. All service lines shall be copper tubing, type "K", or plasticized polyethylene 3408, A.S.T.M. D-2737, S.D.R. 9, 200 P.S.I.
21. All DIP shall have adequate protective measures against corrosion and it shall be used only if as determined by the design engineer, based on field conditions.
22. Retainer glands/mechanical joint restraint shall be used only if authorized by the Engineer and shall conform to A.N.S.I./A.W.W.A. standards C 111/A-21.11-00, or latest revision.
23. All glands shall be manufactured from ductile iron as listed by underwriter's laboratory for 250 P.S.I. minimum water pressure rating.
24. Glands shall be CLOW Corporation model F-1058, standard fire protection equipment company, or approved equal.
25. Service saddles shall be ductile iron with stainless steel straps. Saddles shall be double strap type. All service saddles shall conform to A.N.S.I./A.W.W.A. C 111/A-21.11-00 and A.S.T.M. A588.
26. All P.V.C. pipe shall be installed in accordance with the Uni-Bell plastic pipe Association's "Guide for installation of P.V.C. pressure pipe for Municipal water distribution system". Water distribution pipe shall be of "BLUE" color. All watermain installations shall comply with the color coding requirements of Chapter 62-555.320 F.A.C. (Florida Administrative Code).
27. Detector tape on all P.V.C. mains shall be installed 18" above the water main.
28. All P.V.C. mains must have #6 copper wire, single strand, placed on top of pipe, shall be electrically continuous over the entire length of the pipe, and fastened every 10' with a #12 wire.
29. All DIP shall be installed in accordance with A.N.S.I./A.W.W.A. C-600-99, or latest revision.
30. Pipe deflection shall not exceed 75% of the maximum deflection recommended by the manufacturer.
31. A continuous and uniform bedding shall be provided. Backfill material shall be tamped in layers around the pipe as shown on the plans and/or Village Construction Standards and Specifications. Rocks or stones larger than 3/4" diameter found in the trench shall be removed for a depth of at least 6" below the bottom of the pipe.
32. All details and notes on this sheet shall be applicable unless otherwise superseded elsewhere in plans or specifications.

POTABLE WATER-SANITARY SEWER-RECLAIMED WATER SEPARATION NOTES

1. VERTICAL CROSSINGS
   Sanitary sewer systems and/or reclaimed water mains shall cross under potable water mains whenever phyically possible. Sanitary sewer systems and/or reclaimed water mains crossing below potable water mains shall be laid to provide a preferred vertical separation distance of 12 inches (minimum 6" for gravity/reclaimed main) between the invert of the potable water main and the crown of the lower pipe.
2. HORIZONTAL SEPARATION
   Wherever it is pysically possible:

   Sanitary sewer systems require a preferred 10-foot horizontal separation distance (minimum 6-foot) outside to outside of pipe between any potable water main parallel installations.

   Reclaimed water mains require a minimum of a 3 foot outside to outside of pipe horizontal separation distance between any potable water main and/or a sanitary sewer system parallel installations.

   Wherever either are not physically possible, then the potable water main shall be laid at the maximum physical horizonatal separation distance possible, and either laid:
   A) in a separate trench
   B) on an undisturbed earth shelf;
   and conforming to the minimum Vertical Crossing in paragrph 1).
3. CONFLICTS
   Wherever it is not possibel to maintain the minimum standards in 1) and 2), then all piping material shall be ductile iron pipe (DIP). All DIP shall be class 50 or higher. Adequate protective measures against corrosion shall be used as determained by the design and site conditions. Additionally, the potable water main shall a full joint centered on the conflict and mechanically restrained. An absolute minimum vertical separtion distance of 6 inches shall be provided between the invert of the upper pipe and the crown of the lower pipe.

WATER AND SEWER PLAN

REV.	DESCRIPTION	DATE
1	ADD UTILITY NOTE	02/25/22
2		
3		
4		
5		
6		

IMTIAZ AHMED, P.E.
LICENSED ENGINEER NO. 46102
STATE OF FLORIDA

SEAL

DENTAL OFFICE
1962 S. MILITARY TRAIL
PALM SPRINGS, FLORIDA 33415

ATLANTIC ENGINEERING SERVICES, INC.
2822 WATERS EDGE CIRCLE
GREENACRES, FLORIDA 33413
PHONE - (561) 358-4140
FAX - (561) 967-9242
CERTIFICATE OF AUTHORIZATION NO.: 9390

PROJ. NO. 0000
SCALE: AS SHOWN

DES.	DWN.	CHK.

SHEET NUMBER

CE3

DATE DRAWN
OCT. 2021

NOTES:

1) ALL PIPE AND FITTINGS UP TO THE D.C.D.A. SHALL BE DUCTILE IRON CEMENT LINED.

2) THE INITIAL TEST OF THE BACKFLOW PREVENTION ASSEMBLY SHALL BE PERFORMED BY A CERTIFIED BACKFLOW TECHNICIAN. THE SUCCESSFUL TEST REPORT SHALL BE PROVIDED TO THE VILLAGE PRIOR TO THE FIRE LINE BEING PLACED INTO SERVICE.

3) THE DOUBLE CHECK DETECTOR ASSEMBLY SHALL BE APPROVED BY THE UNIVERSITY OF SOUTHERN CALIFORNIA (U.S.C.) OR THE A.S.S.E. (WITH ONE YEAR FIELD TESTING).

4) WHEN FIRE LINE LENGTH IS OVER ONE PIPE LENGTH, LINE SHALL BE TERMINATED WITH A GATE VALVE (=POINT OF SERVICE). NO PIPE JOINTS / CONNECTIONS ARE PERMITTED BETWEEN POINT OF SERVICE AND VERTICAL 90° BEND.

5) THE DESIGN SHALL MINIMIZE ANY POTENTIAL FOR WATER MAIN WITH NO FLOW. A FIRE HYDRANT LOCATED NEAR THE DOUBLE CHECK DETECTOR ASSEMBLY MAY BE REQUIRED FOR LONG, DEAD ENDING DEDICATED FIRE LINES.

6) AN APPROVED REDUCED PRESSURE PRINCIPLE DETECTOR ASSEMBLY SHALL BE REQUIRED FOR ALL FIRE SYSTEMS WITH STORAGE TANKS AND/OR AUXILIARY WATER SUPPLY.

7) TAMPER SWITCHES MAY BE REQUIRED BY THE FIRE MARSHALL.

8) PIPE MATERIAL ON THE CUSTOMER SIDE OF POINT OF SERVICE SHALL COMPLY WITH FIRE MARSHALL REQUIREMENTS.

9) 3' WIDE 6" THICK CONCRETE SLAB IS RECOMMENDED FOR ASSEMBLY SMALLER THAN 4".

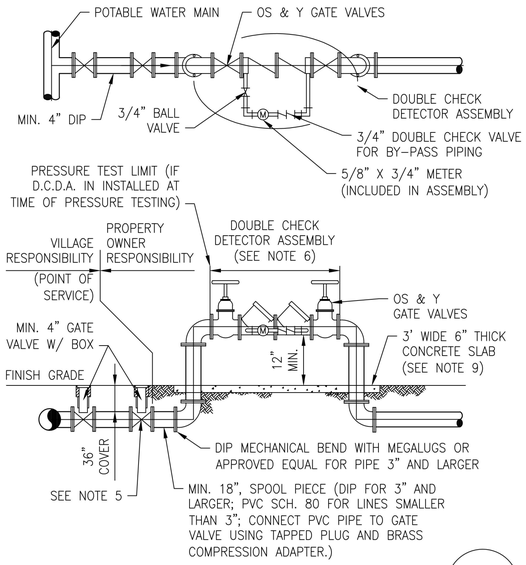

DOUBLE CHECK DETECTOR ASSEMBLY

WM02

NOTES:

1) TOP OF BRASS MARKER MUST BE FLUSH WITH SURROUNDING SURFACE AND NOT CREATE A 1/8" TRIPPING HAZARD.

2) FLOW STREAM I.D.'S:
WM = WATER MAIN
FM = FORCE MAIN

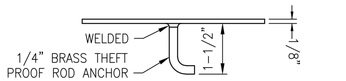

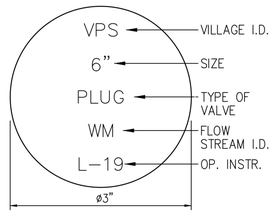

VALVE MARKER

WM05

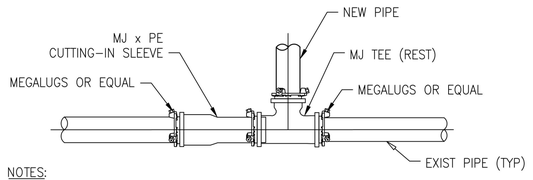

NOTES:

1) MEGALUGS OR EQUAL ARE REQUIRED THROUGHOUT THE ASSEMBLY.

CUT-IN CONNECTION (DUCTILE IRON MJ </= 12")

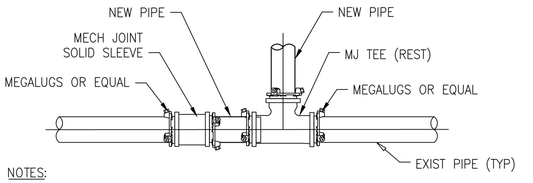

NOTES:

1) MEGALUGS OR EQUAL ARE REQUIRED THROUGHOUT THE ASSEMBLY.

CUT-IN CONNECTION (DUCTILE IRON MJ > 14")

CUT-IN CONNECTION

WM18

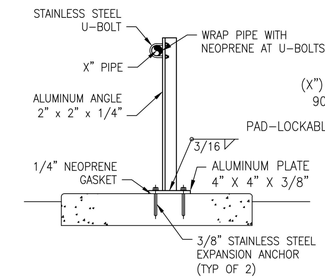

DETAIL 1

SCALE: NTS

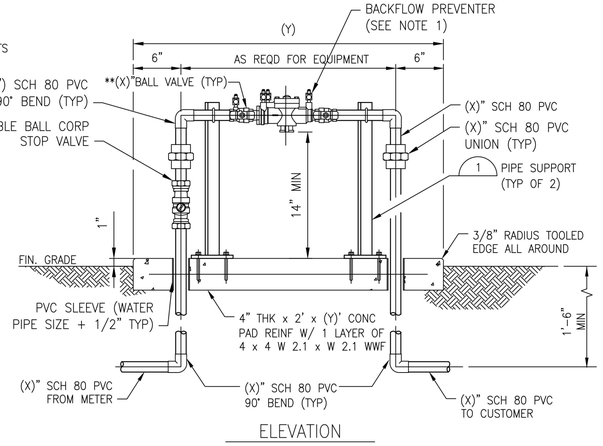

ELEVATION

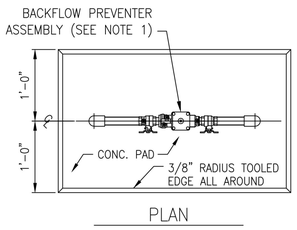

PLAN

NOTES:

1. BACKFLOW PREVENTER SHALL BE RPZ TYPE AS SPECIFICED AND USC APPROVED.
2. ** PROVIDED BY BACKFLOW MANUFACTURER.
3. (X)" = SERVICE SIZE 1" THROUGH 2".
4. EXPOSED PVC PIPE SHALL BE PAINTED PER STANDARD SPECIFICATIONS.
5. CONTRACTOR TO SECURE PLUMBING PERMIT WITH THE LOCAL BUILDING DEPARTMENT.

BACKFLOW PREVENTER 1" – 2"(R.P.Z. TYPE)

WM07

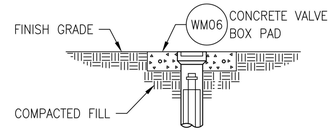

UNPAVED AREAS

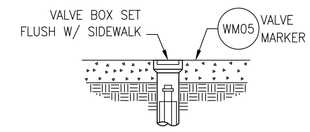

CONCRETE SIDEWALK

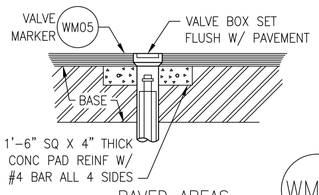

PAVED AREAS

WM08

VALVE BOX SETTINGS

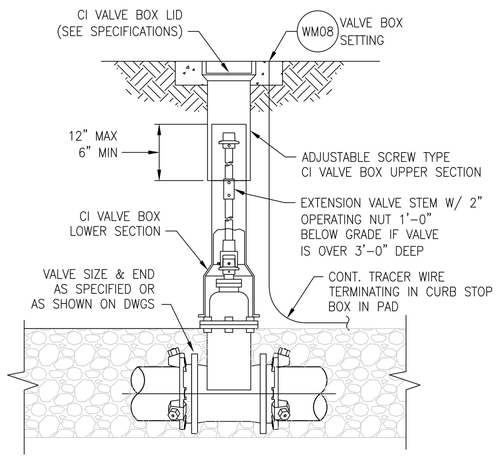

WM09

GATE VALVE SETTING

REV.	DESCRIPTION	DATE
1		
2		
3		
4		
5		
6		

IMTIAZ AHMED, P.E.
LICENSED ENGINEER NO. 46102
STATE OF FLORIDA

SEAL

DENTAL OFFICE
1962 S. MILITARY TRAIL
PALM SPRINGS, FLORIDA 33415

WATER AND SEWER DETAILS

ATLANTIC ENGINEERING SERVICES, INC.
2822 WATERS EDGE CIRCLE
GREENACRES, FLORIDA 33413
PHONE – (561) 358-4140
FAX – (561) 966-9242
CERTIFICATE OF AUTHORIZATION NO.: 9390

PROJ. NO. 0000
SCALE: AS SHOWN

DES.	DWN.	CHK.

SHEET NUMBER
CE4

DATE DRAWN
OCT, 2021

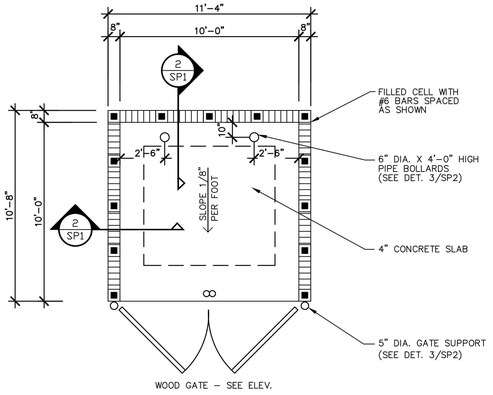

PLAN

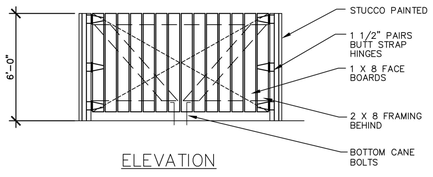

ELEVATION

NOTE: DUMPSTER GATES SHALL BE PAINTED TO MATCH THE BUILDING.
DUMPSTER ENCLOSURE WALLS SHALL BE FINISHED SMOOTH STUCCO.

1 SP1 DUMPSTER ENCLOSURE
SCALE: NTS

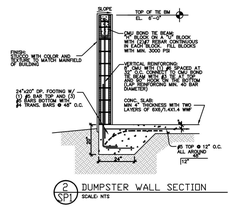

2 SP1 DUMPSTER WALL SECTION
SCALE: NTS

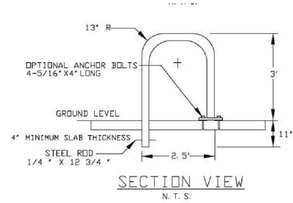

SECTION VIEW
N. T. S.



SIGN

1. THE BICYCLE RACK SHALL BE AN INVERTED 'U','A','POST - AND- LOOP' OR OTHER TYPE THAT MEETS REQUIREMENTS CONTAINED IN SECTION 4.11.6.3 OF THE CITY OF LAKELAND LAND DEVELOPMENT CODE.
2. THE BICYCLE RACK SHALL BE P.V.C. COATED, METAL PIPE RACK.
3. THE BICYCLE RACK SHALL BE IDENTIFIED WITH PAVEMENT MARKINGS OR SIGNAGE.
3. THE RACK MAY BE ATTACHED ACCORDING TO EITHER OF THE METHODS SHOWN. USING THE FLANGE WITH ANCHOR BOLTS MAY REQUIRE ADDITIONAL CONCRETE SLAB THICKNESS. OTHER ANCHORING SYSTEMS MAY BE CONSIDERED UPON APPROVAL IN ADVANCE WITH THE CITY INSPECTOR IF REQUIRED BY THE MANUFACTURER.
4. THE STRIPING AND LETTERING SHOWN SHALL BE HIGH VISIBILITY REFLECTIVE YELLOW PAINT OR THERMOPLASTIC MEETING FDOT SPECIFICATIONS.
5. THE SIGN SHALL BE PLACED 5 FEET FROM GROUND AND EITHER PLACED ON A POST OR WALL IF AVAILABLE.

BIKE RACK DETAIL

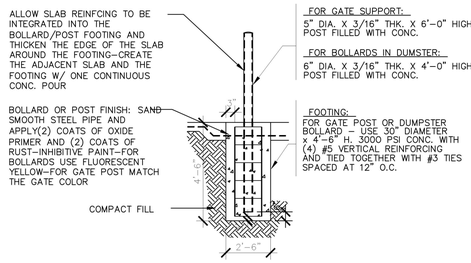

3 SP1 BOLLARD/POST FTG. DET.
SCALE: NTS

DETAIL SHEET

REV.	DESCRIPTION	DATE
1		
2		
3		
4		
5		
6		

IMTIAZ AHMED, P.E.
LICENSED ENGINEER NO. 46102
STATE OF FLORIDA

SEAL

DENTAL OFFICE
1962 S. MILITARY TRAIL
PALM SPRINGS, FLORIDA 33415

ATLANTIC ENGINEERING SERVICES, INC.
2822 WATERS EDGE CIRCLE
GREENACRES, FLORIDA 33413
PHONE - (561) 358-4140
FAX - (561) 967-9242
CERTIFICATE OF AUTHORIZATION NO.: 9390

PROJ. NO. 0000
SCALE: AS SHOWN

DES.	DWN.	CHK.

SHEET NUMBER
CE2
DATE DRAWN
OCT., 2021

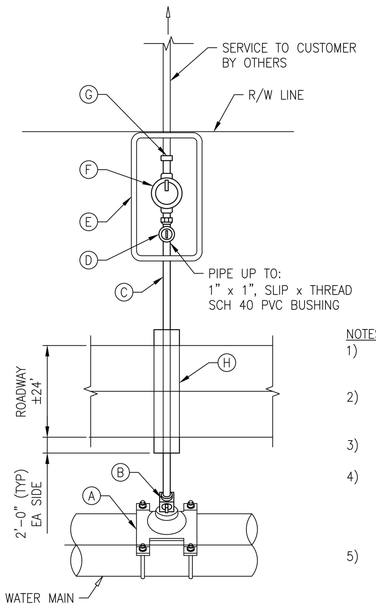

LEGEND

- (A) MAIN X 1" CC TAP DOUBLE BALE SERVICE SADDLE, SMITH BLAIR 313
- (B) 1" CORPORATION STOP, FORD F1000-4-Q-NL
- (C) 1" AWWA C901, SDR9, PE 4710, BLUE POLY PIPE, 250 PSI
- (D) KEYED METER STOP 5/8" CTS COMPRESSION X 5/8", FORD BA43-242W
- (E) NDS SINGLE 12" STANDARD BOX, #D1200 B/O W/ SINGLE PLASTIC LID AND CAST IRON READER # D1200
- (F) 5/8" MASTER METER (PROVIDED/INSTALLED BY VILLAGE)
- (G) 5/8" x 3/4" METER TAIL AND 3/4" SCH 40 PVC FEMALE ADAPTER. (PROVIDED/INSTALLED BY VILLAGE)
- (H) 3" SCH 40 PVC CASING, PVC CASING REQ FOR ALL SERVICES INSTALLED IN PAVED AREAS. MINIMUM LENGTH OF CASING SHALL BE WIDTH OF PAVEMENT + 2' ON EACH END.

NOTES:

1) LOCATION OF WATER SERVICES SHALL BE DETERMINED IN THE FIELD BY OWNER OR RESIDENT PROJECT REPRESENTATIVE.
2) SUCCESSIVE TAPS INTO THE WATER MAIN SHALL BE 18" CENTERS (MIN).
3) MINIMUM COVER FOR SERVICE LINES SHALL BE 2'-0".
4) ALL BRASS COMPONENTS THAT COME IN CONTACT WITH POTABLE WATER SHALL MEET NSF/ANSI STANDARD 61, ANNEX G AND/OR NSF/ANSI STANDARD 372 AS APPLICABLE. BRASS ALLOY SHALL NOT CONTAIN MORE THAN 0.25% LEAD BY WEIGHT.
5) WATER SERVICE ARE NOT TO BE INSTALLED UNDER DRIVEWAYS OR SIDEWALKS.

TYPICAL SINGLE WATER SERVICE

WM11

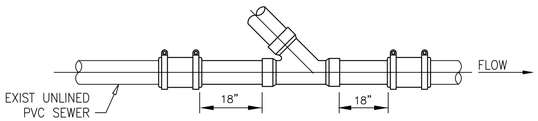

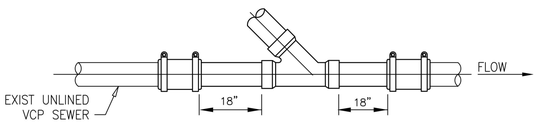

NOTES:

1) PVC PIPE SHALL BE SDR-26, ASTM D-3034. FITTINGS SHALL BE SDR-35 MOLDED

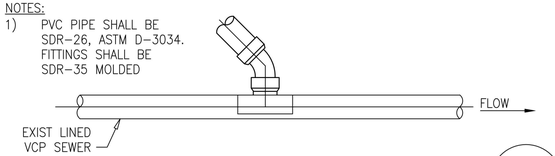

SANITARY SEWER LATERAL CUT-IN

SAN11

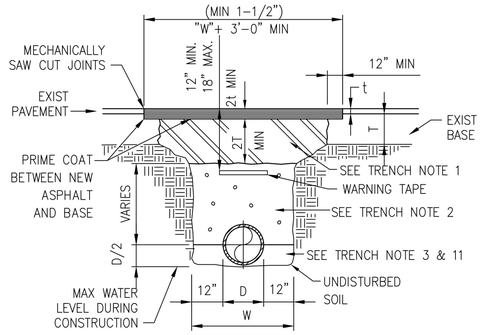

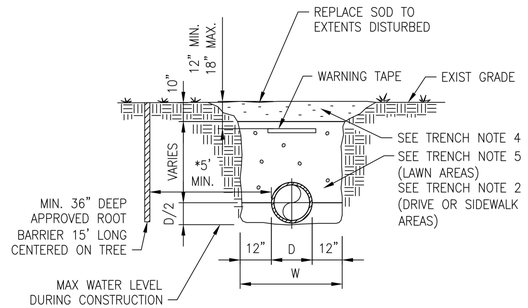

NOTES:

1. PREPARE BASE SECTION, SAW CUT EXISTING PAVEMENT AS APPLICABLE. PRIME COAT, TACK COAT AND PLACE ASPHALT PATCH IMMEDIATELY FOLLOWING PIPE INSTALLATION.

   BASE MATERIAL SHALL BE TWICE THE THICKNESS OF EXISTING BASE MATERIAL, BUT IN NO CASE BE LESS THAN 12". BASE MATERIAL SHALL BE PLACED IN LIFTS NOT TO EXCEED 8" AND COMPACTED TO 98% OF MAXIMUM DENSITY AS DETERMINED BY AASHTO T-180.
2. FILL PLACED IN 8" LIFTS COMPACTED TO 90% OF MAXIMUM DENSITY AS DETERMINED BY AASHTO T180.
3. FILL COMPACTED TO 98% OF MAXIMUM DENSITY AS DETERMINED BY AASHTO T180.
4. NATURAL TOP SOIL GRADED TO 1" TO 2" BELOW GRADE WHERE SOD IS REQUIRED.
5. FILL PLACED IN 12" LIFTS (LOOSE MEASURE), COMPACTED TO DENSITY EQUAL TO SURROUNDING MATERIAL BUT NOT LESS THAN 98% OF MAXIMUM DENSITY AS DETERMINED BY AASHTO T180.
6. EXCAVATIONS SHALL BE DEWATERED, WHERE APPLICABLE, TO ENABLE PIPE AND APPURTENANCES TO BE INSTALLED FREE OF WATER.
7. BEDDING AND BACKFILL MATERIAL SHALL BE AS SPECIFIED.
8. LIMEROCK BASE SHALL BE AS SPECIFIED.
9. TYPE S-III OR SP 9.5 ASPHALTIC CONCRETE SHALL BE AS SPECIFIED. PAVEMENT PATCH THICKNESS TO MATCH EXISTING PAVEMENT THICKNESS, BUT IN NO CASE LESS THAN 1-1/2".
10. OUTLINE OF TRENCH EXCAVATION IS FOR ILLUSTRATIVE PURPOSES ONLY. ACTUAL TRENCH WIDTH AND SHAPE WILL VARY WITH SOIL CONDITIONS. TRENCH EXCAVATION SHALL BE COMPLETED IN ACCORDANCE WITH THE "FLORIDA TRENCH SAFETY ACT" AND "OSHA TRENCH EXCAVATION STANDARDS".
11. BEDDING MATERIAL FOR TYPICAL GRAVITY PIPE INSTALLATION AND ANY PIPE INSTALLATION WHERE UNSUITABLE TRENCH BOTTOM CONDITIONS ARE FOUND SHALL BE CRUSHED LIMEROCK (MAXIMUM SIZE 3/4"). BEDDING SHALL BE PLACED IN LIFTS NOT TO EXCEED 6" AND COMPACTED TO 98% OF THE MATERIAL'S MAXIMUM DENSITY AS DETERMINED BY ASTM D-1557 (AASHTO T-180).

*12. ROOT BARRIER IS REQUIRED FOR APPROVED TREE INSTALLATION CLOSER THAN 10 FEET FROM UTILITY FACILITIES.

13. APPROVED MAGNETIC TAPE IS REQUIRED FOR : ALL POTABLE WATER MAINS, FORCE MAINS AND RECLAIMED WATER MAINS. THE TAPE SHALL BE INSTALLED MAX. 24" BELOW FINISHED GRADE.
14. CONTINUOUS 4" WIDE PAINT STRIPING IS REQUIRED FOR DIP/PCCP WATER MAINS (BLUE), DIP SEWER MAINS (GREEN), AND DIP RECLAIMED WATER MAINS (PURPLE).
15. PERMANENT ABOVE GROUND UTILITY MARKER SHALL BE INSTALLED IF REQUIRED BY PROPERTY OWNER GRANTING THE PIPE INSTALLATION PERMIT.

TYPICAL UTILITY TRENCH BACKFILL AND BEDDING

G01

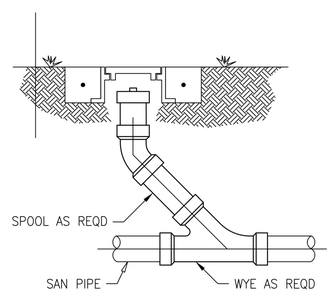

NOTES:

1) CLEANOUTS TO BE LOCATED IN GRASS AREA WHENEVER POSSIBLE, MIN. 3' FROM EDGE OF PAVEMENT, BACK OF CURB, EDGE OF DRIVEWAY, LIGHT POLES, TRANSFORMERS, OR POWER POLES.
2) CLEANOUTS SHALL NOT BE INSTALLED IN TRAFFIC LANES OR AREAS UNDER HEAVY TRAFFIC LOADS.
3) THE COVER TO BE MARKED "S".
4) CLEANOUTS TO BE INSTALLED PRIOR TO WATER METER RELEASE.
5) THE DEVELOPER/PROPERTY OWNER OR ASSIGNEE SHALL BE RESPONSIBLE FOR CLEANOUT INSTALLATION PRIOR TO WATER METER INSTALLATION AS SPECIFIED BY THE VILLAGE.
6) ALONG STREETS WITH ADJACENT NON-EXCLUSIVE UTILITY EASEMENTS, THE CLEANOUTS ENDING VILLAGE MAINTENANCE RESPONSIBILITY SHALL BE INSTALLED MIN. 12", MAX. 18" INTO THE EASEMENT.

TYPICAL CLEANOUT INSTALLATION

SAN10

WATER AND SEWER DETAILS

REV.	DESCRIPTION	DATE
1		
2		
3		
4		
5		
6		

IMTIAZ AHMED, P.E.
LICENSED ENGINEER NO. 46102
STATE OF FLORIDA

SEAL

DENTAL OFFICE
1962 S. MILITARY TRAIL
PALM SPRINGS, FLORIDA 33415

ATLANTIC ENGINEERING SERVICES, INC.
2822 WATERS EDGE CIRCLE
GREENACRES, FLORIDA 33413
PHONE - (561) 358-4140
FAX - (561) 968-9242
CERTIFICATE OF AUTHORIZATION NO.: 9390

PROJ. NO. 0000
SCALE: AS SHOWN

DES.	DWN.	CHK.

SHEET NUMBER
CE5
DATE DRAWN
OCT, 2021

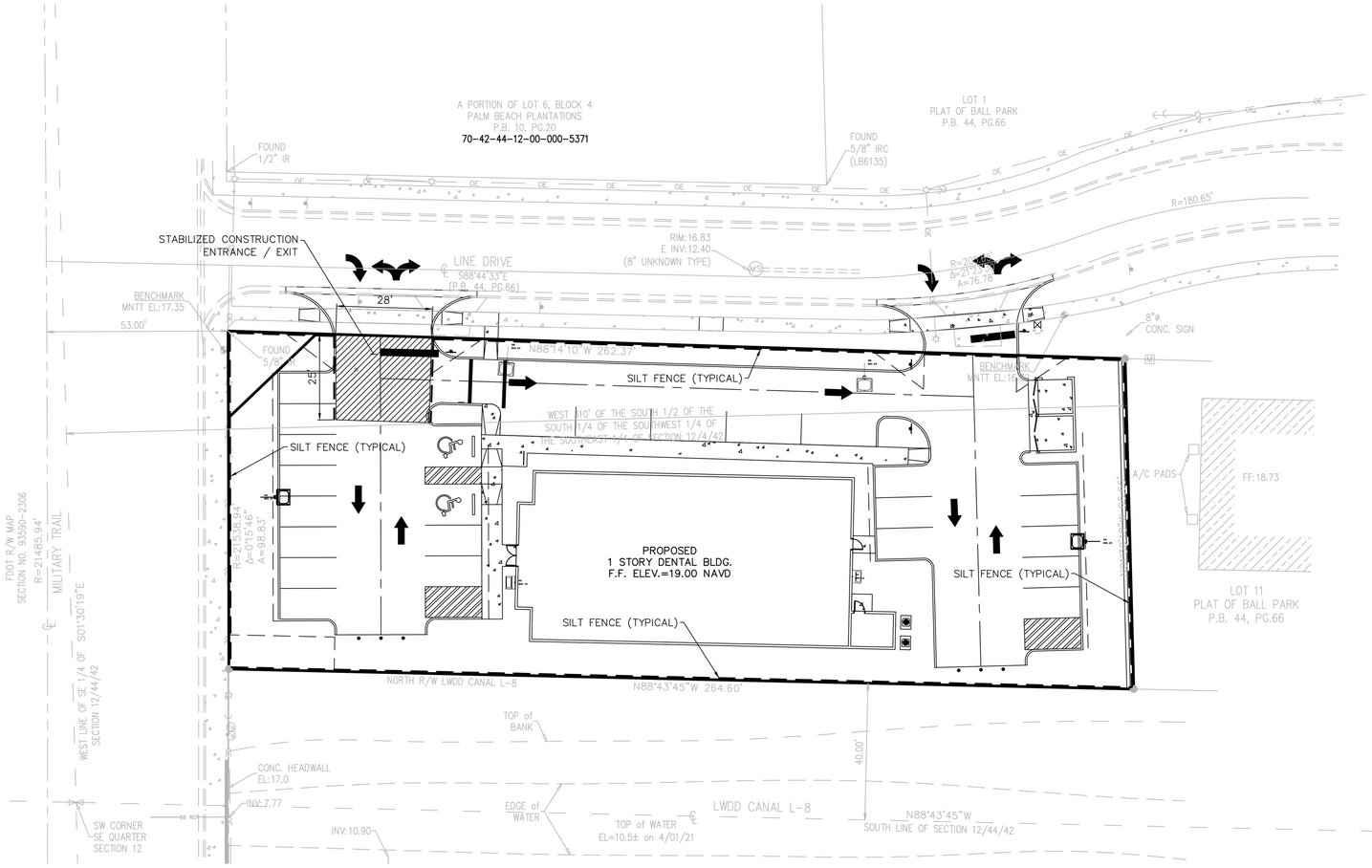

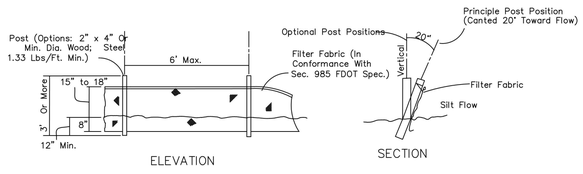

Note: Silt Fence to be paid for under the contract unit price for Staked Silt Fence (LF).

TYPE III SILT FENCE

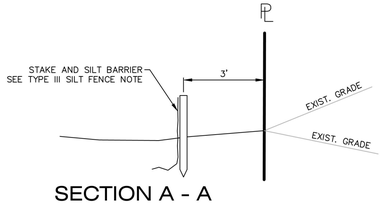

SECTION A - A

0 20 40 Feet

POLUTION PREVENTION LEGEND

- PROPOSED SILT FENCE
- STABILIZED CONSTRUCITON ENTRANCE / EXIT

EROSION CONTROL

1. STABILIZATION PRACTICES

WHERE CONSTRUCTION OF FILL STOCKPILES ADJACENT TO CONSTRUCTION ACTIVITISE CEASES FOR AT LEAST 21 DAYS, THE SIDES WILL BE STABILIZED BY SEEDING AND MULCHING IN ACCORDANCE WITH THE FLORIDA DEPARTMENT OF TRANSPORTATION STANDARD SPECIFICATIONS FOR ROAD AND BRIDGE CONSTRUCTION 1991, SECTION 570. SEED AND MULCH SHALL BE APPLIED NO LATER THAN 14 DAYS FROM THE LAST CONSTRUCTION ACTIVITY IN THE AREA.

2. PERMANENT STABILIZATION

ALL LANDSCAPING, INCLUDING SODDING, SHALL BE INSTALLED ON THE PERIMETER LANDSCAPE BERMS IN ACCORDANCE WITH THE APPROVED LANDSCAPE PLAN WITHIN 14 DAYS OF THE LAST CONSTRUCTION ACTIVITY IN THE LANDSCAPE BUFFER AREAS.

3. OFF-SITE VEHICLE TRACKING

A STABILIZED CONSTRUCTION ENTRANCE CONSISTING OF MINIMUM 4" COMPACTED LIMEROCK BASE WILL BE CONSTRUCTED AS SOON AS CONSTRUCTION STARTS TO REDUCE THE AMOUNT OF VEHICLE TRACKING FROM THE SITE. THE PAVED STREET ADJACENT TO THE CONSTRUCTION ENTRANCE WILL BE SWEPT ON A REGULAR BASIS TO REMOVE ANY ACCUMULATION OF DIRT OR ROCKS WHICH HAVE BEEN TRACKED FROM THE SITE. ALL DUMP TRUCKS BRINGING MATERIAL TO, OR LEAVING THE SITE WILL BE COVERED WITH A TARPAULIN.

4. EROSION AND SEDIMENT CONTROL, INSPECTION AND MAINTENANCE PRACTICES

- ALL CONTROL MEASURES WILL BE INSPECTED AT LEAST ONCE WEEKLY AND FOLLOWING ANY STORM EVENT GREATER THAN 1/2".
- REPAIRS WILL BE COMPLETED WITHIN 24 HOURS.
- THE PERIMETER SWALES WILL BE INSPECTED REGULARLY AND REGRADED AS NECESSARY TO REMOVE THE BUILT UP SEDIMENT.
- TEMPORARY SEED AND MULCH AREAS AND PERMANENT SOD AREAS WILL BE INSPECTED REGULARLY FOR BARE SPOTS AND TO ENSURE ADEQUATE GROWTH.
- TURBIDITY SCREENS SHALL BE INSPECTED REGULARLY, AND REPAIRED AS NECESSARY.
- FILTER FABRIC SHALL BE SECURED IN ALL CATCH BASINS UNTIL COMPLETION OF CONSTRUCTION.

POLLUTION PREVENTION PLAN

REV.	DESCRIPTION	DATE
1		
2		
3		
4		
5		
6		

IMTIAZ AHMED, P.E.
LICENSED ENGINEER NO. 46102
STATE OF FLORIDA

SEAL

DENTAL OFFICE
1962 S. MILITARY TRAIL
PALM SPRINGS, FLORIDA 33415

ATLANTIC ENGINEERING SERVICES, INC.
2822 WATERS EDGE CIRCLE
GREENACRES, FLORIDA 33413
PHONE - (561) 358-4140
FAX - (561) 967-9242
CERTIFICATE OF AUTHORIZATION NO.: 9390

PROJ. NO. 0000
SCALE: AS SHOWN

DES.	DWN.	CHK.

SHEET NUMBER
CE6
DATE DRAWN
OCT., 2021

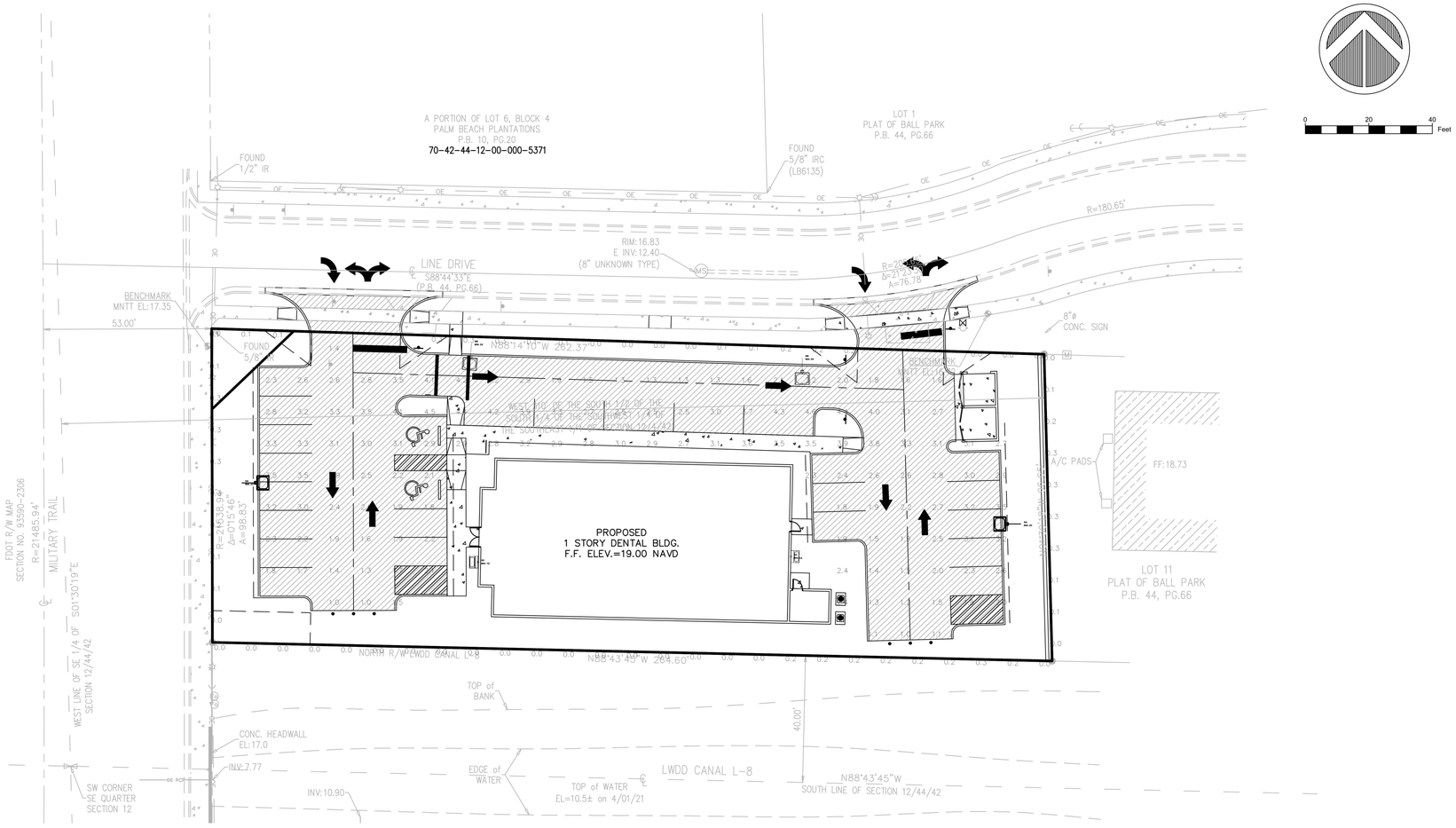

Luminaire Schedule								
Symbol	Qty	Label	Arrangement	Description	Tag	LLF	Luminaire Lumens	Luminaire Watts
	2	SA	Single	BEACON VP-S-60L-136-4K7-4-BC-SETAVPS CONCRETE POLE MTD		0.950	11665	133.603
	2	SB	Single	BEACON VP-S-60L-136-4K7-2-BC-SETAVPS CONCRETE POLE MTD		0.950	11577	133.829
	2	SC	Single	HUBBELL LNC2-9L-4K-070-3 BLDG MTD		0.950	1962	21.4

Calculation Summary							
Label	CalcType	Units	Avg	Max	Min	Avg/Min	Max/Min
DRIVES & PARKING	Illuminance	Fc	2.56	4.6	1.0	2.56	4.60
PROPERTY LINE - LEFT	Illuminance	Fc	0.18	0.3	0.0	N.A.	N.A.
PROPERTY LINE - LOWER	Illuminance	Fc	0.06	0.3	0.0	N.A.	N.A.
PROPERTY LINE - RIGHT	Illuminance	Fc	0.17	0.3	0.0	N.A.	N.A.
PROPERTY LINE - UPPER	Illuminance	Fc	0.11	0.3	0.0	N.A.	N.A.

PHOTOMETRIC PLAN

REV.	DESCRIPTION	DATE
1		
2		
3		
4		
5		
6		

IMTIAZ AHMED, P.E.
LICENSED ENGINEER NO. 46102
STATE OF FLORIDA

SEAL

DENTAL OFFICE
1962 S. MILITARY TRAIL
PALM SPRINGS, FLORIDA 33415

ATLANTIC ENGINEERING SERVICES, INC.
2822 WATERS EDGE CIRCLE
GREENACRES, FLORIDA 33413
PHONE – (561) 358-4140
FAX – (561) 967-9242
CERTIFICATE OF AUTHORIZATION NO.: 9390

PROJ. NO. 0000
SCALE: AS SHOWN

DES.	DWN.	CHK.

SHEET NUMBER

PH1

DATE DRAWN
OCT., 2021

VIPER S SERIES STRIKE
SMALL VIPER LUMINAIRE

Cat.#

Job

Type

BEACON — Design. Performance. Technology.

Approvals

SPECIFICATIONS

Intended Use:
The Beacon Viper luminaire is available with a wide choice of different LED Wattage configurations and optical distributions designed to replace HID lighting up to 400W MH or HPS.

Construction:
- Manufactured with die cast aluminum.
- Coated with a polyester finish that meets ASTM B117 corrosion test requirements and ASTM D522 cracking and loss of adhesion test requirements.
- External hardware is corrosion resistant.
- One piece optical cartridge system consisting of an LED engine, LED lamps, optics, gasket and stainless steel bezel.
- Cartridge is held together with internal brass standoffs soldered to the board so that it can be field replaced as a one piece optical system.
- Two-piece silicone and micro-cellular polyurethane foam gasket ensures a weather-proof seal around each individual LED.

Electrical:
- 100V through 277V, 50 Hz to 60 Hz (UNV), or 347V or 480V input.
- Power factor is ≥.90 at full load.
- Dimming drivers are standard, but must contact factory to request wiring leads for purpose of external dimming controls.
- Component-to-component wiring within the luminaire may carry no more than 80% of rated load and is certified by UL for use at 600VAC at 90°C or higher.
- Plug disconnects are certified by UL for use at 600 VAC, 13A rating. 13A rating applies to primary (AC) side only.
- Fixture electrical compartment shall contain all LED driver components and shall be provided with a push-button terminal block for AC power connections.
- Surge protection - 20kA.
- Optional 7-pin ANSI C136.41-2013 twist-lock photo control receptacle available. Compatible with ANSI C136.41 external wireless control devices.
- *Lifeshield™* Circuit - protects luminaire from excessive temperature. The device shall activate at a specific, factory-preset temperature, and progressively reduce power over a finite temperature range. Operation shall be smooth and undetectable to the eye. Thermal circuit is designed to "fail on", allowing the luminaire to revert to full power in the event of an interruption of its power supply, or faulty wiring connection to the drivers. The device shall be able to co-exist with other 0-10V control devices (occupancy sensors, external dimmers, etc.).

Controls/Options:
- Available with an optional passive infrared (PIR) motion sensor capable of detecting motion 360° around the luminaire. When no motion is detected for the specified time, the Motion Response system reduces the wattage to factory preset level, reducing the light level accordingly. When motion is detected by the PIR sensor, the luminaire returns to full wattage and full light output. Please contact Beacon Products if project requirements vary from standard configuration.
- Available with Energeni for optional set dimming, timed dimming with simple delay, or timed dimming based on time of night (see www.beaconproducts.com/products/energeni).
- In addition, Viper can be specified with **SiteSync™** wireless control system for reduction in energy and maintenance costs while optimizing light quality 24/7. For more details, see ordering information or visit: www.hubbelllighting.com/sitesync

Installation:
- Mounting options for horizontal arm, vertical tenon or traditional arm mounting available. Mounting hardware included.

Finish:
- IFS polyester powder-coat electrostatically applied and thermocured. IFS finish consists of a five stage pretreatment regimen with a polymer primer sealer and top coated with a thermoset super TGIC polyester powder coat finish.
- The finish meets the AAMA 2604 performance specification which includes passing a 3000 hour salt spray test for corrosion resistance and resists cracking or loss of adhesion per ASTM D522 and resists surface impacts of up to 160 inch-pounds.

Certifications/Ratings:
- DesignLights Consortium (DLC) qualified, consult DLC website for more details: (http://www.designlights.org/QPL)
- Certified to UL 1598, UL 8750 and CSA C22.2 No.250.0
- IDA approved
- This product is approved by the Florida Fish and Wildlife Conservation Commission. Separate spec available at: http://www.beaconproducts.com/products/vipersmall

Warranty:
Five year limited warranty for more information visit: www.hubbelllighting.com/resources/warranty

CERTIFICATIONS/LISTINGS

c SP us — IDA DARK-SKY APPROVED — DLC PREMIUM

*3000K and warmer CCTs only

PRODUCT IMAGE(S)



DIMENSIONS

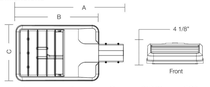

A	B	C	Weight:	EPA
21.75" (552 mm)	16.75" (425 mm)	11.25" (286 mm)	15.0 lbs (6.8 kg)	.67 ft²

MOUNTING OPTIONS

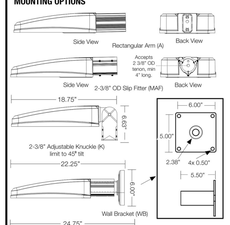

Beacon Products • 2041 58th Avenue Circle East Bradenton, FL 34203 • Phone: 800-345-4928
Due to our continued efforts to improve our products, product specifications are subject to change without notice.
© 2017 BEACON PRODUCTS, All Rights Reserved • For more information visit our website: **www.beaconproducts.com** • Printed in USA JULY 18, 2017 3:20 PM

HUBBELL Lighting

ORDERING INFORMATION ORDERING EXAMPLE: VPS/24L-55/4K7/4W/UNV//A/DBT/7PR-TL/GENI-04/BC

VPS [ ] [ ] [ ] [ ] [ ] [ ] [ ] [ ] [ ]

SERIES	LED ENGINE	CCT/CRI[1]	ROTATION	VOLTAGE	COLOR	OPTIONS
VPS Viper	24L-55 55W, LED array	3K7 3000K, 70 CRI	Leave blank for no rotation	UNV 120-277V	DBT Dark Bronze Textured	F Fusing
	36L-65 65W, LED array	4K7 4000K, 70 CRI	L[3] Optic rotation left	120 120V	BMT Black Matte Textured	BSP Bird Spikes
	36L-80 80W, LED array	5K7 5000K, 70 CRI	R[3] Optic rotation right	208 208V	PS Platinum Silver Smooth	BC Backlight control (limited to Type 4W only)
	48L-110 110W, LED array			240 240V	WHT White Textured	
	60L-136 136W, LED array			277 277V	CC Custom Color (RAL#)	
				347 347V		
				480 480V		

DISTRIBUTION

FR	Type 1/Front Row
2	Type 2
3	Type 3
4	Type 4
4W	Type 4 Wide
5QM	Type 5QM
5R	Type 5R (rectangular)
5W	Type 5W (round wide)

MOUNTING

A	Rectangular Arm (formerly RA) for square or round pole
MAF	Mast Arm Fitter (formerly SF2) for 2-3/8" OD horizontal arm
K	Knuckle (formerly PK2) limit to 45° tilt or 2-3/8" OD horizontal arm or vertical tenon
WB	Wall Bracket
AD	Universal Arm for square pole
AD3	Universal Arm for 2.4"-4.1" round pole
AD4	Universal Arm for 4.2" - 5.3" round pole
AD5	Universal Arm for 5.5" -5.9" round pole
AD6	Universal Arm for 6.0"-6.5" round pole

HOUSE SIDE SHIELD ACCESSORIES

HSS/VP-S/90-FB/XXX	90° shield front or back
HSS/VP-S/90-LR/XXX	90° shield left or right
HSS/VP-S/270-FB/XXX	270° shield front or back
HSS/VP-S/270-LR/XXX	270° shield left or right
HSS/VP-S/360/XXX	Full shield

(Replace XXX with notation for desired finish color) (Refer to page 5 for shield images)

MOUNTING ACCESSORIES

VPL-AD-RPA3	2.4"-4.1" Round Pole Adapter for AD arm
VPL-AD-RPA4	4.2"-5.3" Round Pole Adapter for AD arm
VPL-AD-RPA5	5.5"-5.9" Round Pole Adapter for AD arm
VPL-AD-RPA6	6.0"-6.5" Round Pole Adapter for AD arm

CONTROL OPTIONS

7PR	7-Pin Receptacle only (shorting cap, photo control, or wireless control provided by others)
7PR-SC	7-Pin Receptacle w/Shorting Cap
7PR-TL	7-Pin Receptacle w/Twist Lock photo control
SCP/_F[1,2]	Programmable Occupancy Sensor w/ daylight control (120-277 volts only)
WSP/_F[1,2]	WASP Occupancy Sensor w/ daylight control (347 or 480 volts only)
GENI-XX[3]	ENERGENI
SWP[1,4]	SiteSync Pre-Commission
SWPM[1,2,4]	SiteSync Pre-Comm w/ Sensor

PRECOMMISSIONED SITESYNC ORDERING INFORMATION: When ordering a fixture with the SiteSync lighting control option, additional information will be required to complete the order. The SiteSync Commissioning Form or alternate schedule information must be completed. This form includes Project location, Group information, and Operating schedules. For more detailed information please visit www.hubbell-automation.com/products/sitesync/ or contact Hubbell Lighting tech support at (800) 345-4928.

SiteSync fixtures with Motion control (SWPM) require the mounting height of the fixture for selection of the lens.

Examples: VPS/24L-55/4K7/UNV/A/DBT/SWP/ — SiteSync only
VPS/24L-55/4K7/UNV/A/DBT/SWPM-40F/ — SiteSync with Motion Control

Accessories and Services (Ordered Separately)

Catalog Number	Description
SCP-REMOTE	Remote control for SCP/_F option. Order at least one per project to program and control.
SWUSB*	SiteSync loaded on USB flash drive (Windows based only)
SWTAB*	SiteSync Windows Tablet
SWBRG*	SiteSync Wireless Bridge Node

*When ordering with SiteSync, one of the interface options must be chosen and ordered separately. Each option contains the SiteSync License, GUI and Bridge Node.
+ If needed, an additional Bridge Node can be ordered.

[1] Not available with other wireless control or sensor options
[2] Specify mounting height, 8–9' or less, 40–9' to 40'
[3] Specify routine setting code (example GENI-04). See ENERGENI brochure and instructions for setting table and options. Not available with other wireless control or sensor options
[4] Specify group size and zone at time of order. See www.hubbelllighting.com/sitesync for further details. Order at least one SiteSync interface Accessory SWUSB or SWTAB. Each option contains SiteSync License, GUI, and Bridge Node
[5] Only available with 1A, 2, 3, 4, 4W and 5R distributions
[6] Order at least one SCP-REMOTE per project location to program and control
[7] This product is approved by the Florida Fish and Wildlife Conservation Commission. Separate spec available at: http://cdn.beaconproducts.com/content/products/specs/specs_files/Viper_Small_LED_forlife_spec_sheet.pdf



SiteSync Lighting Control is available from our most popular brands in a broad range of award-winning product families.

LEFT ROTATED OPTIC **RIGHT ROTATED OPTIC**

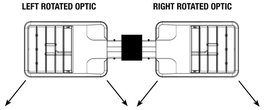

PERFORMANCE DATA

# LED'S	DRIVE CURRENT (MILLIAMPS)	SYSTEM WATTS	DISTRIBUTION TYPE	5K (5000K nominal, 70 CRI) LUMENS	LPW[1]	B	U	G	4K (4000K nominal, 70 CRI) LUMENS	LPW[1]	B	U	G	3K (3000K nominal, 70 CRI) LUMENS	LPW[1]	B	U	G
24	700 mA	55W	FR	6357	118	1	0	1	6486	120	1	0	1	5804	107	1	0	1
			2	6132	114	1	0	1	6257	116	1	0	2	5599	104	1	0	1
			3	6015	111	1	0	2	6137	114	1	0	2	5492	102	1	0	2
			4	5921	110	1	0	2	6034	112	1	0	2	5400	100	1	0	2
			4W	5406	100	1	0	2	6041	112	1	0	2	5406	100	1	0	2
			5QM	6022	112	2	0	1	6145	114	2	0	1	5499	102	2	0	1
			5R	6063	112	3	0	3	6187	115	3	0	3	5536	103	3	0	3
			5W	5908	109	3	0	1	6029	112	3	0	1	5908	102	3	0	1
36	560 mA	65W	FR	7864	121	1	0	1	8041	124	1	0	1	7189	111	1	0	1
			2	7586	117	1	0	2	7757	119	1	0	2	6934	107	1	0	2
			3	7441	114	1	0	2	7609	117	1	0	2	6802	105	1	0	2
			4	7317	110	1	0	2	7482	112	1	0	2	6688	100	1	0	2
			4W	7325	113	1	0	2	7490	115	1	0	2	6696	103	1	0	2
			5QM	7450	115	3	0	1	7618	117	3	0	1	6810	105	3	0	1
			5R	7501	115	3	0	3	7670	118	3	0	3	6857	105	3	0	3
			5W	7309	112	3	0	2	7473	115	3	0	2	6681	103	3	0	1
36	700 mA	80W	FR	9535	118	1	0	1	9730	120	1	0	1	8706	107	1	0	1
			2	9197	114	1	0	2	9385	116	1	0	2	8398	104	1	0	2
			3	9022	111	1	0	2	9206	114	1	0	2	8238	102	1	0	2
			4	8871	110	1	0	2	9052	112	1	0	2	8100	100	1	0	2
			4W	8881	110	1	0	3	9062	112	1	0	3	8109	100	1	0	2
			5QM	9033	112	3	0	1	9217	114	3	0	1	8248	102	3	0	1
			5R	9095	112	3	0	3	9280	115	3	0	3	8304	103	3	0	3
			5W	8861	109	3	0	2	9043	112	3	0	2	8092	100	3	0	2
48	700 mA	110W	FR	12713	118	1	0	1	12973	120	2	0	1	11608	107	1	0	1
			2	12263	114	2	0	2	12513	116	2	0	2	11197	104	2	0	2
			3	12029	111	2	0	2	12275	114	2	0	2	10984	102	1	0	2
			4	11828	110	1	0	3	12069	112	1	0	3	10800	100	1	0	2
			4W	11841	110	5	0	5	12083	112	2	0	3	11841	110	1	0	3
			5QM	12044	112	3	0	2	12290	114	3	0	2	10997	102	3	0	1
			5R	12126	112	3	0	3	12374	115	3	0	3	11072	103	3	0	3
			5W	11825	109	4	0	2	12057	112	4	0	2	10789	100	4	0	2
60	700 mA	136W	FR	15891	117	2	0	2	16216	120	2	0	2	14511	107	2	0	1
			2	15329	113	2	0	2	15642	116	2	0	2	13997	103	2	0	2
			3	15037	111	2	0	3	15344	113	2	0	3	13730	101	2	0	3
			4	14784	109	1	0	3	15086	111	1	0	3	13500	100	1	0	3
			4W	14802	109	2	0	3	15104	112	2	0	3	13515	100	2	0	3
			5QM	15055	111	3	0	2	15362	114	3	0	2	13747	102	3	0	2
			5R	15158	112	4	0	4	15469	114	4	0	4	13841	102	4	0	4
			5W	14781	109	4	0	2	15083	111	4	0	2	13495	100	4	0	2

Beacon Products • 2041 58th Avenue Circle East Bradenton, FL 34203 • Phone: 800-345-4928
Due to our continued efforts to improve our products, product specifications are subject to change without notice.
© 2017 BEACON PRODUCTS, All Rights Reserved • For more information visit our website: **www.beaconproducts.com** • Printed in USA JULY 18, 2017 3:20 PM

HUBBELL Lighting

PHOTOMETRICS

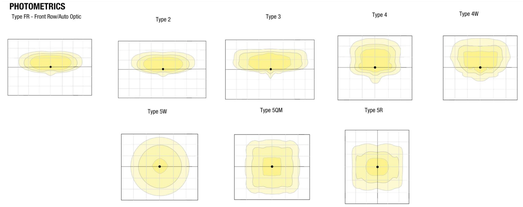

[1]Lumen values are from photometric tests performed in accordance with IESNA LM-79-08. Data is considered to be representative of the configurations shown. Actual performance may differ as a result of end-use environment and application.

ELECTRICAL DATA

# OF LEDS	NUMBER OF DRIVERS	DRIVE CURRENT (mA)	INPUT VOLTAGE (V)	SYSTEM POWER (w)	CURRENT (Amps)
24	2	700 mA	120	55	0.5
			277		0.2
			347		0.2
			480		0.1
36	1	560 mA	120	65	0.65
			277		0.28
			347		0.22
			480		0.16
		700 mA	120	80	0.7
			277		0.3
			347		0.2
			480		0.2
48	1	700 mA	120	110	0.9
			277		0.4
			347		0.3
			480		0.2
60	1	700 mA	120	136	1.1
			277		0.5
			347		0.4
			480		0.3

PROJECTED LUMEN MAINTENANCE

AMBIENT TEMP.	0	25,000	50,000	TM-21-11 60,000	100,000	Calculated L70 (HOURS)
25°C / 77°C	1.00	0.97	0.95	0.95	0.92	>377,000

[1] Projected per IESNA TM-21-11
Data references the extrapolated performance projections for the base model in a 25°C ambient, based on 10,000 hours of LED testing per IESNA LM-80-08.

DRILL PATTERN

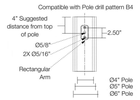

EPA

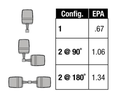

Config.	EPA
1	.67
2 @ 90°	1.06
2 @ 180°	1.34

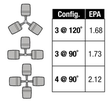

Config.	EPA
3 @ 120°	1.68
3 @ 90°	1.73
4 @ 90°	2.12

TENON TOP POLE BRACKET ACCESSORIES (Order Separately)
(2 3/8" OD tenon)

Catalog Number	Description
SETA2-XX[1,2]	Square tenon adapter (4 at 90 degrees)
RETA2-XX[1,2]	Round tenon adapter (4 at 90 degrees)
TETA2-XX[1,3]	Hexagonal tenon adapter (3 at 120 degrees)

1 Replace XX with color choice, eg.: DB for Dark Bronze
2 Only for use with AD mounting option
3 Only for use with AD3 mounting option

Beacon Products • 2041 58th Avenue Circle East Bradenton, FL 34203 • Phone: 800-345-4928
Due to our continued efforts to improve our products, product specifications are subject to change without notice.
© 2017 BEACON PRODUCTS, All Rights Reserved • For more information visit our website: **www.beaconproducts.com** • Printed in USA JULY 18, 2017 3:20 PM

HUBBELL Lighting

HOUSE SIDE SHIELD FIELD INSTALL ACCESSORIES

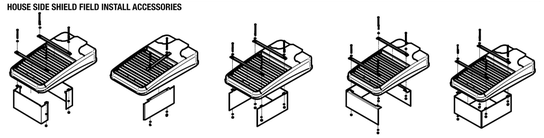

HSS/VP-S/90-FB/XXX 90° shield front or back (2 shields shown)
HSS/VP-S/90-LR/XXX 90° shield left or right (1 shield shown in left orientation)
HSS/VP-S/270-FB/XXX 270° shield front or back (1 shield shown in back orientation)
HSS/VP-S/270-LR/XXX 270° shield left or right (1 shield shown in right orientation)
HSS/VP-S/360/XXX Full shield (1 shield shown)

AD ARM MOUNTING INSTRUCTIONS

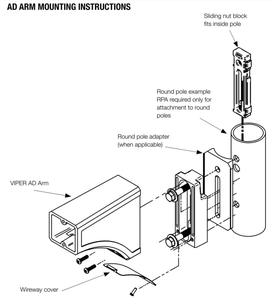

Beacon Products • 2041 58th Avenue Circle East Bradenton, FL 34203 • Phone: 800-345-4928
Due to our continued efforts to improve our products, product specifications are subject to change without notice.
© 2017 BEACON PRODUCTS, All Rights Reserved • For more information visit our website: **www.beaconproducts.com** • Printed in USA JULY 18, 2017 3:20 PM

HUBBELL Lighting

POLE MOUNTING TO WITHSTAND 3 SECOND 140 M.P.H. WIND GUSTS

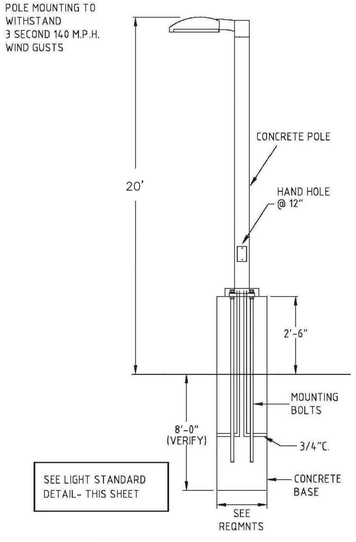

POLE DETAIL

DATE | DESCRIPTION | REV.
1 | 2 | 3 | 4 | 5 | 5

IMTIAZ AHMED, P.E.
LICENSED ENGINEER NO. 46102
STATE OF FLORIDA

SEAL

FOREST HILL MEDICAL
3098 FOREST HILL BLVD
PALM SPRINGS, FLORIDA

ATLANTIC ENGINEERING SERVICES, INC.
2822 WATERS EDGE CIRCLE
GREENACRES, FLORIDA 33413
PHONE – (561) 358-4140
FAX – (561) 966-9242
CERTIFICATE OF AUTHORIZATION NO.: 9390

PROJ. NO. 0000
SCALE: AS SHOWN

DES.	DWN.	CHK.

SHEET NUMBER
PH2
DATE DRAWN
OCT., 2021

PHOTOMETRIC DETAILS

VIPER S SERIES STRIKE
SMALL VIPER LUMINAIRE

Cat.#

Job

Type

BEACON — Design. Performance. Technology.

Approvals

SPECIFICATIONS

Intended Use:
The Beacon Viper luminaire is available with a wide choice of different LED Wattage configurations and optical distributions designed to replace HID lighting up to 400W MH or HPS.

Construction:
- Manufactured with die cast aluminum.
- Coated with a polyester finish that meets ASTM B117 corrosion test requirements and ASTM D522 cracking and loss of adhesion test requirements.
- External hardware is corrosion resistant.
- One piece optical cartridge system consisting of an LED engine, LED lamps, optics, gasket and stainless steel bezel.
- Cartridge is held together with internal brass standoffs soldered to the board so that it can be field replaced as a one piece optical system.
- Two-piece silicone and micro-cellular polyurethane foam gasket ensures a weather-proof seal around each individual LED.

Electrical:
- 100V through 277V, 50 Hz to 60 Hz (UNV), or 347V or 480V input.
- Power factor is ≥.90 at full load.
- Dimming drivers are standard, but must contact factory to request wiring leads for purpose of external dimming controls.
- Component-to-component wiring within the luminaire may carry no more than 80% of rated load and is certified by UL for use at 600VAC at 90°C or higher.
- Plug disconnects are certified by UL for use at 600 VAC, 13A rating. 13A rating applies to primary (AC) side only.
- Fixture electrical compartment shall contain all LED driver components and shall be provided with a push-button terminal block for AC power connections.
- Surge protection - 20kA.
- Optional 7-pin ANSI C136.41-2013 twist-lock photo control receptacle available. Compatible with ANSI C136.41 external wireless control devices.
- *Lifeshield™* Circuit - protects luminaire from excessive temperature. The device shall activate at a specific, factory-preset temperature, and progressively reduce power over a finite temperature range. Operation shall be smooth and undetectable to the eye. Thermal circuit is designed to "fail on", allowing the luminaire to revert to full power in the event of an interruption of its power supply, or faulty wiring connection to the drivers. The device shall be able to co-exist with other 0-10V control devices (occupancy sensors, external dimmers, etc.).

Controls/Options:
- Available with an optional passive infrared (PIR) motion sensor capable of detecting motion 360° around the luminaire. When no motion is detected for the specified time, the Motion Response system reduces the wattage to factory preset level, reducing the light level accordingly. When motion is detected by the PIR sensor, the luminaire returns to full wattage and full light output. Please contact Beacon Products if project requirements vary from standard configuration.
- Available with Energeni for optional set dimming, timed dimming with simple delay, or timed dimming based on time of night (see www.beaconproducts.com/products/energeni).
- In addition, Viper can be specified with **SiteSync™** wireless control system for reduction in energy and maintenance costs while optimizing light quality 24/7. For more details, see ordering information or visit: www.hubbelllighting.com/sitesync

Installation:
- Mounting options for horizontal arm, vertical tenon or traditional arm mounting available. Mounting hardware included.

Finish:
- IFS polyester powder-coat electrostatically applied and thermocured. IFS finish consists of a five stage pretreatment regimen with a polymer primer sealer and top coated with a thermoset super TGIC polyester powder coat finish.
- The finish meets the AAMA 2604 performance specification which includes passing a 3000 hour salt spray test for corrosion resistance and resists cracking or loss of adhesion per ASTM D522 and resists surface impacts of up to 160 inch-pounds.

Certifications/Ratings:
- DesignLights Consortium (DLC) qualified, consult DLC website for more details: (http://www.designlights.org/QPL)
- Certified to UL 1598, UL 8750 and CSA C22.2 No.250.0
- IDA approved
- This product is approved by the Florida Fish and Wildlife Conservation Commission. Separate spec available at: http://www.beaconproducts.com/products/vipersmall

Warranty:
Five year limited warranty for more information visit: www.hubbelllighting.com/resources/warranty

CERTIFICATIONS/LISTINGS

c SP us — IDA DARK-SKY APPROVED — DLC PREMIUM

*3000K and warmer CCTs only

PRODUCT IMAGE(S)



DIMENSIONS

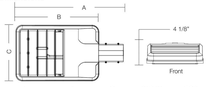

A	B	C	Weight:	EPA
21.75" (552 mm)	16.75" (425 mm)	11.25" (286 mm)	15.0 lbs (6.8 kg)	.67 ft²

MOUNTING OPTIONS

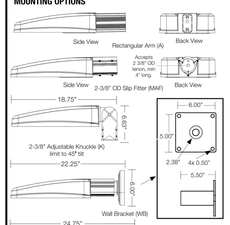

Beacon Products • 2041 58th Avenue Circle East Bradenton, FL 34203 • Phone: 800-345-4928
Due to our continued efforts to improve our products, product specifications are subject to change without notice.
© 2017 BEACON PRODUCTS, All Rights Reserved • For more information visit our website: **www.beaconproducts.com** • Printed in USA JULY 18, 2017 3:20 PM

HUBBELL Lighting

ORDERING INFORMATION ORDERING EXAMPLE: VPS/24L-55/4K7/4W/UNV//A/DBT/7PR-TL/GENI-04/BC

VPS [ ] [ ] [ ] [ ] [ ] [ ] [ ] [ ] [ ]

SERIES	LED ENGINE	CCT/CRI[1]	ROTATION	VOLTAGE	COLOR	OPTIONS
VPS Viper	24L-55 55W, LED array	3K7 3000K, 70 CRI	Leave blank for no rotation	UNV 120-277V	DBT Dark Bronze Textured	F Fusing
	36L-65 65W, LED array	4K7 4000K, 70 CRI	L[3] Optic rotation left	120 120V	BMT Black Matte Textured	BSP Bird Spikes
	36L-80 80W, LED array	5K7 5000K, 70 CRI	R[3] Optic rotation right	208 208V	PS Platinum Silver Smooth	BC Backlight control (limited to Type 4W only)
	48L-110 110W, LED array			240 240V	WHT White Textured	
	60L-136 136W, LED array			277 277V	CC Custom Color (RAL#)	
				347 347V		
				480 480V		

DISTRIBUTION

FR	Type 1/Front Row
2	Type 2
3	Type 3
4	Type 4
4W	Type 4 Wide
5QM	Type 5QM
5R	Type 5R (rectangular)
5W	Type 5W (round wide)

MOUNTING

A	Rectangular Arm (formerly RA) for square or round pole
MAF	Mast Arm Fitter (formerly SF2) for 2-3/8" OD horizontal arm
K	Knuckle (formerly PK2) limit to 45° tilt or 2-3/8" OD horizontal arm or vertical tenon
WB	Wall Bracket
AD	Universal Arm for square pole
AD3	Universal Arm for 2.4"-4.1" round pole
AD4	Universal Arm for 4.2" - 5.3" round pole
AD5	Universal Arm for 5.5" -5.9" round pole
AD6	Universal Arm for 6.0"-6.5" round pole

HOUSE SIDE SHIELD ACCESSORIES

HSS/VP-S/90-FB/XXX	90° shield front or back
HSS/VP-S/90-LR/XXX	90° shield left or right
HSS/VP-S/270-FB/XXX	270° shield front or back
HSS/VP-S/270-LR/XXX	270° shield left or right
HSS/VP-S/360/XXX	Full shield

(Replace XXX with notation for desired finish color) (Refer to page 5 for shield images)

MOUNTING ACCESSORIES

VPL-AD-RPA3	2.4"-4.1" Round Pole Adapter for AD arm
VPL-AD-RPA4	4.2"-5.3" Round Pole Adapter for AD arm
VPL-AD-RPA5	5.5"-5.9" Round Pole Adapter for AD arm
VPL-AD-RPA6	6.0"-6.5" Round Pole Adapter for AD arm

CONTROL OPTIONS

7PR	7-Pin Receptacle only (shorting cap, photo control, or wireless control provided by others)
7PR-SC	7-Pin Receptacle w/Shorting Cap
7PR-TL	7-Pin Receptacle w/Twist Lock photo control
SCP/_F[1,2]	Programmable Occupancy Sensor w/ daylight control (120-277 volts only)
WSP/_F[1,2]	WASP Occupancy Sensor w/ daylight control (347 or 480 volts only)
GENI-XX[3]	ENERGENI
SWP[1,4]	SiteSync Pre-Commission
SWPM[1,2,4]	SiteSync Pre-Comm w/ Sensor

PRECOMMISSIONED SITESYNC ORDERING INFORMATION: When ordering a fixture with the SiteSync lighting control option, additional information will be required to complete the order. The SiteSync Commissioning Form or alternate schedule information must be completed. This form includes Project location, Group information, and Operating schedules. For more detailed information please visit www.hubbell-automation.com/products/sitesync/ or contact Hubbell Lighting tech support at (800) 345-4928.

SiteSync fixtures with Motion control (SWPM) require the mounting height of the fixture for selection of the lens.

Examples: VPS/24L-55/4K7/UNV/A/DBT/SWP/ — SiteSync only
VPS/24L-55/4K7/UNV/A/DBT/SWPM-40F/ — SiteSync with Motion Control

Accessories and Services (Ordered Separately)

Catalog Number	Description
SCP-REMOTE	Remote control for SCP/_F option. Order at least one per project to program and control.
SWUSB*	SiteSync loaded on USB flash drive (Windows based only)
SWTAB*	SiteSync Windows Tablet
SWBRG*	SiteSync Wireless Bridge Node

*When ordering with SiteSync, one of the interface options must be chosen and ordered separately. Each option contains the SiteSync License, GUI and Bridge Node.
+ If needed, an additional Bridge Node can be ordered.

[1] Not available with other wireless control or sensor options
[2] Specify mounting height, 8–9' or less, 40–9' to 40'
[3] Specify routine setting code (example GENI-04). See ENERGENI brochure and instructions for setting table and options. Not available with other wireless control or sensor options
[4] Specify group size and zone at time of order. See www.hubbelllighting.com/sitesync for further details. Order at least one SiteSync interface Accessory SWUSB or SWTAB. Each option contains SiteSync License, GUI, and Bridge Node
[5] Only available with 1A, 2, 3, 4, 4W and 5R distributions
[6] Order at least one SCP-REMOTE per project location to program and control
[7] This product is approved by the Florida Fish and Wildlife Conservation Commission. Separate spec available at: http://cdn.beaconproducts.com/content/products/specs/specs_files/Viper_Small_LED_forlife_spec_sheet.pdf



SiteSync Lighting Control is available from our most popular brands in a broad range of award-winning product families.

LEFT ROTATED OPTIC **RIGHT ROTATED OPTIC**

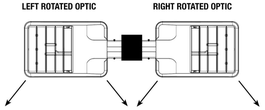

PERFORMANCE DATA

# LED'S	DRIVE CURRENT (MILLIAMPS)	SYSTEM WATTS	DISTRIBUTION TYPE	5K (5000K nominal, 70 CRI) LUMENS	LPW[1]	B	U	G	4K (4000K nominal, 70 CRI) LUMENS	LPW[1]	B	U	G	3K (3000K nominal, 70 CRI) LUMENS	LPW[1]	B	U	G
24	700 mA	55W	FR	6357	118	1	0	1	6486	120	1	0	1	5804	107	1	0	1
			2	6132	114	1	0	1	6257	116	1	0	2	5599	104	1	0	1
			3	6015	111	1	0	2	6137	114	1	0	2	5492	102	1	0	2
			4	5921	110	1	0	2	6034	112	1	0	2	5400	100	1	0	2
			4W	5406	100	1	0	2	6041	112	1	0	2	5406	100	1	0	2
			5QM	6022	112	2	0	1	6145	114	2	0	1	5499	102	2	0	1
			5R	6063	112	3	0	3	6187	115	3	0	3	5536	103	3	0	3
			5W	5908	109	3	0	1	6029	112	3	0	1	5908	102	3	0	1
36	560 mA	65W	FR	7864	121	1	0	1	8041	124	1	0	1	7189	111	1	0	1
			2	7586	117	1	0	2	7757	119	1	0	2	6934	107	1	0	2
			3	7441	114	1	0	2	7609	117	1	0	2	6802	105	1	0	2
			4	7317	110	1	0	2	7482	112	1	0	2	6688	100	1	0	2
			4W	7325	113	1	0	2	7490	115	1	0	2	6696	103	1	0	2
			5QM	7450	115	3	0	1	7618	117	3	0	1	6810	105	3	0	1
			5R	7501	115	3	0	3	7670	118	3	0	3	6857	105	3	0	3
			5W	7309	112	3	0	2	7473	115	3	0	2	6681	103	3	0	1
36	700 mA	80W	FR	9535	118	1	0	1	9730	120	1	0	1	8706	107	1	0	1
			2	9197	114	1	0	2	9385	116	1	0	2	8398	104	1	0	2
			3	9022	111	1	0	2	9206	114	1	0	2	8238	102	1	0	2
			4	8871	110	1	0	2	9052	112	1	0	2	8100	100	1	0	2
			4W	8881	110	1	0	3	9062	112	1	0	3	8109	100	1	0	2
			5QM	9033	112	3	0	1	9217	114	3	0	1	8248	102	3	0	1
			5R	9095	112	3	0	3	9280	115	3	0	3	8304	103	3	0	3
			5W	8861	109	3	0	2	9043	112	3	0	2	8092	100	3	0	2
48	700 mA	110W	FR	12713	118	1	0	1	12973	120	2	0	1	11608	107	1	0	1
			2	12263	114	2	0	2	12513	116	2	0	2	11197	104	2	0	2
			3	12029	111	2	0	2	12275	114	2	0	2	10984	102	1	0	2
			4	11828	110	1	0	3	12069	112	1	0	3	10800	100	1	0	2
			4W	11841	110	5	0	5	12083	112	2	0	3	11841	110	1	0	3
			5QM	12044	112	3	0	2	12290	114	3	0	2	10997	102	3	0	1
			5R	12126	112	3	0	3	12374	115	3	0	3	11072	103	3	0	3
			5W	11825	109	4	0	2	12057	112	4	0	2	10789	100	4	0	2
60	700 mA	136W	FR	15891	117	2	0	2	16216	120	2	0	2	14511	107	2	0	1
			2	15329	113	2	0	2	15642	116	2	0	2	13997	103	2	0	2
			3	15037	111	2	0	3	15344	113	2	0	3	13730	101	2	0	3
			4	14784	109	1	0	3	15086	111	1	0	3	13500	100	1	0	3
			4W	14802	109	2	0	3	15104	112	2	0	3	13515	100	2	0	3
			5QM	15055	111	3	0	2	15362	114	3	0	2	13747	102	3	0	2
			5R	15158	112	4	0	4	15469	114	4	0	4	13841	102	4	0	4
			5W	14781	109	4	0	2	15083	111	4	0	2	13495	100	4	0	2

Beacon Products • 2041 58th Avenue Circle East Bradenton, FL 34203 • Phone: 800-345-4928
Due to our continued efforts to improve our products, product specifications are subject to change without notice.
© 2017 BEACON PRODUCTS, All Rights Reserved • For more information visit our website: **www.beaconproducts.com** • Printed in USA JULY 18, 2017 3:20 PM

HUBBELL Lighting

PHOTOMETRICS

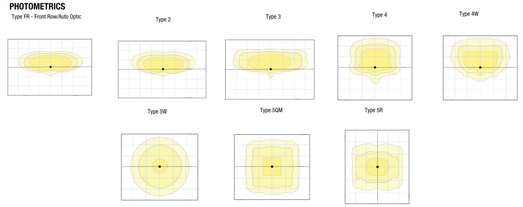

[1]Lumen values are from photometric tests performed in accordance with IESNA LM-79-08. Data is considered to be representative of the configurations shown. Actual performance may differ as a result of end-use environment and application.

ELECTRICAL DATA

# OF LEDS	NUMBER OF DRIVERS	DRIVE CURRENT (mA)	INPUT VOLTAGE (V)	SYSTEM POWER (w)	CURRENT (Amps)
24	2	700 mA	120	55	0.5
			277		0.2
			347		0.2
			480		0.1
36	1	560 mA	120	65	0.65
			277		0.28
			347		0.22
			480		0.16
		700 mA	120	80	0.7
			277		0.3
			347		0.2
			480		0.2
48	1	700 mA	120	110	0.9
			277		0.4
			347		0.3
			480		0.2
60	1	700 mA	120	136	1.1
			277		0.5
			347		0.4
			480		0.3

PROJECTED LUMEN MAINTENANCE

AMBIENT TEMP.	0	25,000	50,000	TM-21-11 60,000	100,000	Calculated L70 (HOURS)
25°C / 77°C	1.00	0.97	0.95	0.95	0.92	>377,000

[1] Projected per IESNA TM-21-11
Data references the extrapolated performance projections for the base model in a 25°C ambient, based on 10,000 hours of LED testing per IESNA LM-80-08.

DRILL PATTERN

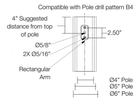

EPA

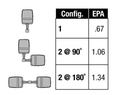

Config.	EPA
1	.67
2 @ 90°	1.06
2 @ 180°	1.34

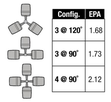

Config.	EPA
3 @ 120°	1.68
3 @ 90°	1.73
4 @ 90°	2.12

TENON TOP POLE BRACKET ACCESSORIES (Order Separately)
(2 3/8" OD tenon)

Catalog Number	Description
SETA2-XX[1,2]	Square tenon adapter (4 at 90 degrees)
RETA2-XX[1,2]	Round tenon adapter (4 at 90 degrees)
TETA2-XX[1,3]	Hexagonal tenon adapter (3 at 120 degrees)

1 Replace XX with color choice, eg.: DB for Dark Bronze
2 Only for use with AD mounting option
3 Only for use with AD3 mounting option

Beacon Products • 2041 58th Avenue Circle East Bradenton, FL 34203 • Phone: 800-345-4928
Due to our continued efforts to improve our products, product specifications are subject to change without notice.
© 2017 BEACON PRODUCTS, All Rights Reserved • For more information visit our website: **www.beaconproducts.com** • Printed in USA JULY 18, 2017 3:20 PM

HUBBELL Lighting

HOUSE SIDE SHIELD FIELD INSTALL ACCESSORIES

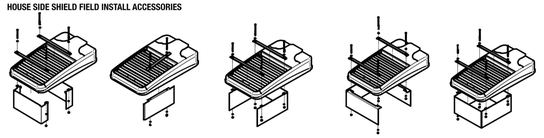

HSS/VP-S/90-FB/XXX 90° shield front or back (2 shields shown)
HSS/VP-S/90-LR/XXX 90° shield left or right (1 shield shown in left orientation)
HSS/VP-S/270-FB/XXX 270° shield front or back (1 shield shown in back orientation)
HSS/VP-S/270-LR/XXX 270° shield left or right (1 shield shown in right orientation)
HSS/VP-S/360/XXX Full shield (1 shield shown)

AD ARM MOUNTING INSTRUCTIONS

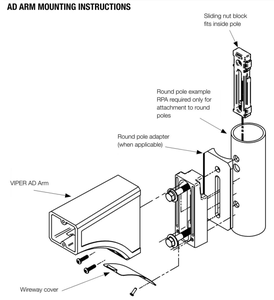

Beacon Products • 2041 58th Avenue Circle East Bradenton, FL 34203 • Phone: 800-345-4928
Due to our continued efforts to improve our products, product specifications are subject to change without notice.
© 2017 BEACON PRODUCTS, All Rights Reserved • For more information visit our website: **www.beaconproducts.com** • Printed in USA JULY 18, 2017 3:20 PM

HUBBELL Lighting

POLE MOUNTING TO WITHSTAND 3 SECOND 140 M.P.H. WIND GUSTS

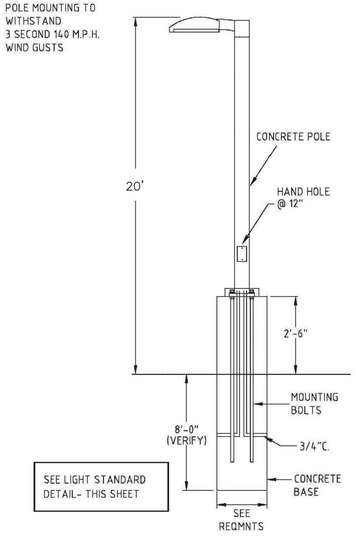

POLE DETAIL

DATE | DESCRIPTION | REV.
1 | 2 | 3 | 4 | 5 | 5

IMTIAZ AHMED, P.E.
LICENSED ENGINEER NO. 46102
STATE OF FLORIDA

SEAL

FOREST HILL MEDICAL
3098 FOREST HILL BLVD
PALM SPRINGS, FLORIDA

ATLANTIC ENGINEERING SERVICES, INC.
2822 WATERS EDGE CIRCLE
GREENACRES, FLORIDA 33413
PHONE – (561) 358-4140
FAX – (561) 966-9242
CERTIFICATE OF AUTHORIZATION NO.: 9390

PROJ. NO. 0000
SCALE: AS SHOWN

DES.	DWN.	CHK.

SHEET NUMBER
PH2
DATE DRAWN
OCT., 2021

PHOTOMETRIC DETAILS

Village of Palm Springs Development Review

DATE:	3/28/2022
DESCRIPTION:	Patel Dental Office – Dental/Medical Office w/ Dental Lab
APPLICANT/AGENT:	Aaron Taylor – Arc Development Global, LLC
OWNER:	Vaani Real Estate LLC
APPLICATION TYPE:	Site Plan
REQUEST:	Site Plan and Landscape Plan Review; Variance Request Review
LOCATION:	1962 S. Military Trail, Palm Springs, FL 33461
STAFF REVIEW:	**CONDITIONAL APPROVAL**

The Engineering Department has the following Conditions of Approval:

Utilities/Engineering/Etc

1. [Previous Comment 2 and 8] **Villages Response: Restoration is not shown where lateral passes under sidewalk; include restoration in this location. Applicant is to review attached wastewater details and revise plans as needed to provide required cover for lateral within ROW. Final location of lateral will be based on a review of record drawings. If lateral connection does exist, connection will be to existing lateral in ROW. Final limits of restoration will be determined at the time of building permit submittal.**

2. [Previous Comment 7] Provide an estimate of sewer flow based on proposed usage.
Villages Response: Estimate of sewer flow based on proposed usage can be provided at time of building permit. Note that the applicant proceeds at their own risk. No assurance can be provided that the sewer capacity is available for the proposed square footage.

Drainage Calculations

1. [Previous Comment 12 through 17] **Villages Response: The applicant may address the detailed concerns about stormwater at the time of the building department application. The stormwater calculation report submitted at that time shall include: pre vs post discharge, commercial retention requirements, selected formula used to calculate the trench length, narrative or exhibit indicating the method of determining site storage volumes, point of discharge for the site and path to receiving water body, and a Geotechnical Report substantiating the assumption in the calculations. This comment is to remain as a condition of approval.**

Landscape Plan

2. Tree #249 appears to be on the property line. If the species is native or non-invasive, the tree shall be preserved to the maximum extent possible. The exact location of the privacy wall in this area may be reconfigured to accommodate the preservation of this tree.

Site Plan Variance Requests – Recommended for approval.

3. [Previous Comment 32] V1 – The variance request for the reduction in landscape buffer on the north side of the perimeter might be considered. It is recommended to measure the amount of green space between the back of sidewalk along Line Dr. and the back of curb within the subject site. It appears that the amount of this green space will be closer to the requirement of 10' in depth.
   Applicants Response: Response: The width of the "Green Space: along between the back of the sidewalk, ranges from 5' toward the west ingress/egress and 6.75' toward the ingress/egress to the east.
   Villages Response: As explained, the total width of landscape area along the northern perimeter meets or exceeds the required 10'. This variance is recommended for approval.

4. [Previous Comment 33] V2 - The variance requested for the reduction in landscape buffer on the south side of the property is not necessary. A Category 6 buffer is required for this portion of the perimeter, which is 10' in width. A 10' wide buffer has been provided, therefore this request for variance shall be withdrawn.
   Applicants Response: Variance was requested due to the parking/asphalt area to the east encroaching into the required South Landscape Buffer by 5'. This area is the only area which does not meet the 10' Buffer requirement, and therefore a Variance of 5' had to be requested.
   Villages Response: The variance is recommended for approval.

5. [Previous Comment 34] V3 – The variance request is for a reduction in provided parking by 4 spaces. This request was discussed as part of the preapplication process. The current code requests that access points be consolidated to the greatest extent possible. Additionally, the removal of one of the entrances may create additional space in the site plan to meet the requirements of parking section. It is understood that the site is small with respect to the proposed use of the project. This by itself does not justify a variance. The owner should also consider and research options available for offsite parking, several other parking lots are available within 300-ft of the site north and south see Sec. 34-1336. Currently based on the information provided the staff does not support this variance request.
   Applicants Response: As result of the not being able to receive support for the needed variance from the minimum parking requirement, the building had to be reduced again. Restricting the Dental operation to the point that all portions of the Dentist operation can no longer be contained with one building. This variance request has been removed.
   Villages Response: Acknowledged.

This letter has been prepared by the following individual, in association with their consultants and subconsultants:



Brent Whitfield, P.E.
Chen Moore and Associates
Tel: 561.746.6900 x 1160
Email: bwhitfield@chenmoore.com

VILLAGE UTILITY STANDARDS
UPDATED MAY 2019

VILLAGE OF PALM SPRINGS, FLORIDA

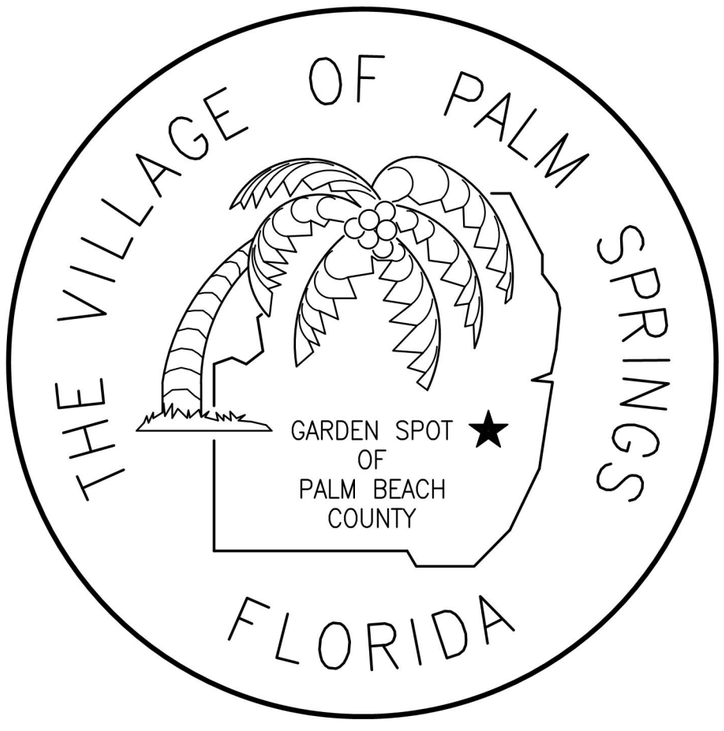

VILLAGE OFFICIALS

BEV SMITH	MAYOR
JONI S. BRINKMAN	VICE MAYOR
PATTI WALLER	MAYOR PRO TEM
DOUG GUNTHER	COUNCIL MEMBER
GARY M. READY	COUNCIL MEMBER
RICHARD J. READE	VILLAGE MANAGER
MATTHEW HAMMOND, P.E.	PUBLIC SERVICES DIRECTOR

Sunshine811

CALL 811 OR WWW.SUNSHINE811.COM TWO FULL BUSINESS DAYS BEFORE DIGGING TO HAVE UTILITIES LOCATED AND MARKED.

CHECK POSITIVE RESPONSE CODES BEFORE YOU DIG!

PROJECT N0.: 400-080.00
DATE: JULY 2, 2019

File name: C:\Civil 3D Projects\400-080.01_Village Utility Standards Update - 2018\01_Working\400-080.01_G-00.dwg; Plotted @: 8/23/2019 2:00:12 PM; Scale multiplier: 0.5; Printed by: Ricardo Paez; Design Milestone: FINAL SUBMITTAL

FINAL SUBMITTAL

USER'S GUIDE

GENERAL INTENT:

THE PURPOSE OF THIS MANUAL IS TO PROVIDE STANDARDIZED SPECIFICATIONS AND DETAILS FOR THE CONSTRUCTION OF UTILITY SYSTEM IMPROVEMENTS WITHIN THE VILLAGE OF PALM SPRINGS UTILITY SERVICE AREA. THIS MANUAL COVERS THE REQUIREMENTS FOR IMPROVEMENTS OR ADDITIONS TO THE VILLAGE'S EXISTING POTABLE WATER SYSTEM, WASTEWATER COLLECTION SYSTEM, PUMP STATIONS, FORCE MAIN SYSTEM, VACUUM SEWER SYSTEM, AND OTHER MISCELLANEOUS ITEMS.

IT SHALL BE THE RESPONSIBILITY OF THE USER OF THIS DOCUMENT TO COORDINATE ALL NECESSARY REQUIREMENTS FOR EACH SPECIFIC PROJECT WITH THE APPROPRIATE VILLAGE OF PALM SPRINGS PUBLIC SERVICES DEPARTMENT PERSONNEL. THE STANDARD DETAILS INCLUDED HEREIN SHALL BE USED WITH PRIOR APPROVAL FROM THE VILLAGE OF PALM SPRINGS.

THE OMITTANCE OF ANY ITEM THAT IS SPECIFICALLY REQUIRED TO PROPERLY COMPLETE THE CONSTRUCTION OF AN IMPROVEMENT TO ANY OF THE SYSTEMS AS DESCRIBED SHALL BE PROVIDED BY THE END USER EVEN IF THE SPECIFIC ITEM IS NOT SPECIFIED OR SHOWN BY THE STANDARD DETAILS, OR SPECIFICATIONS.

IF THERE IS A CONFLICT BETWEEN THE REQUIREMENTS OF THE STANDARD SPECIFICATIONS AND DETAILS AND THE APPLICABLE REGULATORY REQUIREMENTS SET FORTH BY THE FLORIDA DEPARTMENT OF ENVIRONMENTAL PROTECTION, PALM BEACH COUNTY ENGINEERING OR THE PALM BEACH COUNTY HEALTH DEPARTMENT, THE MOST STRINGENT OF THESE REQUIREMENTS SHALL PREVAIL.

CURRENT EDITION:

THE CURRENT EDITION IS VILLAGE UTILITY STANDARDS UPDATE – 2018

INDUSTRY STANDARDS, REFERENCE SPECIFICATIONS, REGULATIONS, AND CODES:

ALL REFERENCED CODES, SPECIFICATIONS AND REGULATIONS SHALL BE CURRENT EDITION.

STANDARD DETAILS AND DRAWING GUIDELINES:

THESE STANDARD SPECIFICATIONS, DETAILS AND DESIGN GUIDELINES MAY BE REPRODUCED BY THE END USER FOR THE VILLAGE OF PALM SPRINGS' PROJECTS ONLY.

PLEASE BE ADVISED THAT THE FILES ARE IN ADOBE.PDF AND ACAD FILE FORMATS THAT CAN BE ALTERED BY THE END USER.

DUE TO THIS FACT, ANY REUSE OF THESE FILES WILL BE AT THE USER'S SOLE RISK WITHOUT LIABILITY OF EXPOSURE TO THE VILLAGE OF PALM SPRINGS OR ECKLER ENGINEERING, INC. THE USER SHALL INDEMNIFY AND HOLD HARMLESS THE VILLAGE OF PALM SPRINGS AND ECKLER ENGINEERING, INC. FROM ALL CLAIMS, DAMAGES, LOSSES, AND EXPENSES INCLUDING ATTORNEY'S FEES ARISING OUT OF OR RESULTING FROM THE USE OF THE DIGITAL STANDARD SPECIFICATIONS, DETAILS AND DESIGN GUIDES.

ADDITIONALLY, IT IS THE RESPONSIBILITY OF THE USER TO SELECT AND USE THE APPROPRIATE STANDARD DETAILS, STANDARD SPECIFICATIONS, DESIGN GUIDES AND DIGITAL FILES THAT MEET THE REQUIREMENTS OF THE SPECIFIC INSTALLATION OR TO GIVE THE USER GENERAL GUIDELINES TO FOLLOW DURING DESIGN ESPECIALLY SINCE MANY PROJECTS THAT WILL REQUIRE THE DRAWING GUIDELINES ARE SITE SPECIFIC.

SPECIFIC PROJECT REQUIREMENTS SHALL BE CONFIRMED WITH THE VILLAGE OF PALM SPRINGS.

REPRODUCTION:

THE USE OF THE DIGITAL FILES DOES NOT CONSTITUTE A WAIVER OF THE OWNERSHIP RIGHTS OF THE VILLAGE OF PALM SPRINGS OR ECKLER ENGINEERING, INC. THE DIGITAL FILES ARE THE SOLE PROPERTY OF THE VILLAGE OF PALM SPRINGS AND ECKLER ENGINEERING, INC. AND ALL COPYRIGHTS AND OWNERSHIP RIGHTS ARE RESERVED. THE DIGITAL FILES SHOULD NOT BE REPRODUCED, COPIED, OR UTILIZED FOR NON–VILLAGE OF PALM SPRINGS UTILITY PROJECTS WITHOUT WRITTEN PERMISSION.

INDEX OF DRAWINGS

DWG NO.		TOTAL DWGS	SHEET	DESCRIPTION
				GENERAL
1	OF	46	1	COVER
2	OF	46	G–01	USER'S GUIDE, INDEX OF DRAWINGS, AND GENERAL NOTES
				STANDARD DETAILS – GENERAL
3	OF	46	GEN–01	STANDARD DETAILS GENERAL
4	OF	46	GEN–02	STANDARD DETAILS GENERAL
				SPECIFICATIONS
5	OF	46	SPEC–01	SPECIFICATIONS – GENERAL
6	OF	46	SPEC–02	SPECIFICATIONS – WATER DISTRIBUTION
7	OF	46	SPEC–03	SPECIFICATIONS – WATER DISTRIBUTION
8	OF	46	SPEC–04	SPECIFICATIONS – WASTEWATER COLLECTION
9	OF	46	SPEC–05	SPECIFICATIONS – FORCE MAIN
10	OF	46	SPEC–06	SPECIFICATIONS – VACUUM SEWER SYSTEM AND ACCESSORIES
11	OF	46	SPEC–07	SPECIFICATIONS – SANITARY PUMP STATION
12	OF	46	SPEC–08	SPECIFICATIONS – SANITARY PUMP STATION
13	OF	46	SPEC–09	SPECIFICATIONS – SANITARY PUMP STATION
14	OF	46	SPEC–10	SPECIFICATIONS – PUMP STATION CONTROL PANEL
15	OF	46	SPEC–11	SPECIFICATIONS – PUMP STATION CONTROL PANEL
16	OF	46	SPEC–12	SPECIFICATIONS – RTU PANEL
17	OF	46	SPEC–13	SPECIFICATIONS – DUPLEX PUMP STATION CONTROL PROTOCOL
18	OF	46	SPEC–14	SPECIFICATIONS – DUPLEX PUMP STATION CONTROL PROTOCOL
19	OF	46	SPEC–15	SPECIFICATIONS – FLUSHING, TESTING, AND DISINFECTION
20	OF	46	SPEC–16	SPECIFICATIONS – FLUSHING, TESTING, AND DISINFECTION
				WATER DISTRIBUTION
21	OF	46	WM–01	STANDARD DETAILS – WATER DISTRIBUTION
22	OF	46	WM–02	STANDARD DETAILS – WATER DISTRIBUTION
23	OF	46	WM–03	STANDARD DETAILS – WATER DISTRIBUTION
24	OF	46	WM–04	STANDARD DETAILS – WATER DISTRIBUTION
				WASTEWATER COLLECTION
25	OF	46	SAN–01	STANDARD DETAILS – WASTEWASTER COLLECTION
26	OF	46	SAN–02	STANDARD DETAILS – WASTEWASTER COLLECTION
				FORCE MAIN
27	OF	46	FM–01	STANDARD DETAILS – FORCE MAIN
28	OF	46	FM–02	STANDARD DETAILS – FORCE MAIN
				VACUUM SEWER
29	OF	46	VC–01	STANDARD DETAILS – VACUUM
30	OF	46	VC–02	STANDARD DETAILS – VACUUM
31	OF	46	VC–03	STANDARD DETAILS – VACUUM
32	OF	46	VC–04	STANDARD DETAILS – VACUUM
33	OF	46	VC–05	STANDARD DETAILS – VACUUM

DWG NO.		TOTAL DWGS	SHEET	SHEET DESCRIPTION
				SANITARY PUMP STATION
34	OF	46	DG–01	DESIGN GUIDELINES – PUMP STATION
35	OF	46	DG–02	DESIGN GUIDELINES – PUMP STATION
36	OF	46	DG–03	DESIGN GUIDELINES – PUMP STATION
37	OF	46	DG–04	DESIGN GUIDELINES – PUMP STATION
38	OF	46	PS–01	STANDARD DETAILS – PUMP STATION
39	OF	46	PS–02	STANDARD DETAILS – PUMP STATION
40	OF	46	PS–03	STANDARD DETAILS – PUMP STATION
41	OF	46	PS–04	STANDARD DETAILS – PUMP STATION
42	OF	46	PS–05	STANDARD DETAILS – PUMP STATION
43	OF	46	PS–06	STANDARD DETAILS – PUMP STATION
				RTU
44	OF	46	RTU–01	STANDARD DETAILS – RTU
				MISC DETAILS
45	OF	46	MISC–01	STANDARD DETAILS – MISCELLANEOUS
46	OF	46	MISC–02	STANDARD DETAILS – MISCELLANEOUS

DSGN: 2 - Design by
DR: 3 - Drawn by
CHK: 4 - Checked by
APVD: 5 - Approved by

VERIFY SCALE
1"
BAR IS ONE INCH ON ORIGINAL DRAWING. ADJUST SCALES AS NECESSARY.

No.	DATE	REVISIONS	BY	APVD
		FINAL SUBMITTAL		

CONSULTANT

VILLAGE OF PALM SPRINGS

VILLAGE UTILITY STANDARDS UPDATED MAY 2019

USER'S GUIDE, INDEX OF DRAWINGS, AND GENERAL NOTES

DWG NO. 2 OF 46
SHEET G-01
PROJ. NO. 400-080.00
DATE JULY 2, 2019

File name: C:\Civil 3D Projects\400-080.01_Village Utility Standards Update - 2018\01_Working\400-080.01_G-01.dwg; Plotted @: 6/8/2018 11:06:47 AM; Scale multiplier: 0.5; Printed by: Ricardo Paez; Milestone: FINAL SUBMITTAL

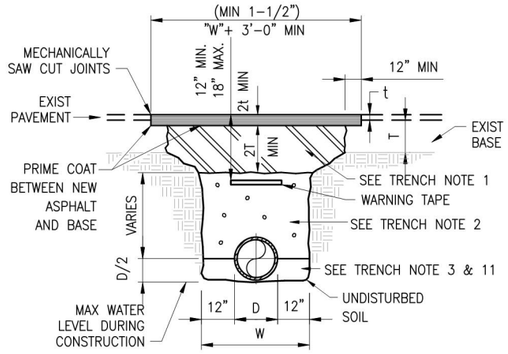

EXISTING PAVED AREAS

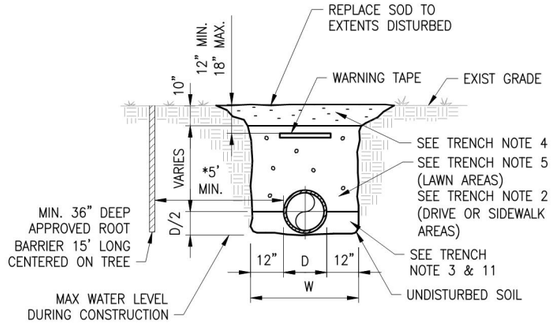

NON-PAVED AREAS

NOTES:

1. PREPARE BASE SECTION, SAW CUT EXISTING PAVEMENT AS APPLICABLE. PRIME COAT, TACK COAT AND PLACE ASPHALT PATCH IMMEDIATELY FOLLOWING PIPE INSTALLATION.

   BASE MATERIAL SHALL BE TWICE THE THICKNESS OF EXISTING BASE MATERIAL, BUT IN NO CASE BE LESS THAN 12". BASE MATERIAL SHALL BE PLACED IN LIFTS NOT TO EXCEED 8" AND COMPACTED TO 98% OF MAXIMUM DENSITY AS DETERMINED BY AASHTO T-180.

2. FILL PLACED IN 8" LIFTS COMPACTED TO 90% OF MAXIMUM DENSITY AS DETERMINED BY AASHTO T180.

3. FILL COMPACTED TO 98% OF MAXIMUM DENSITY AS DETERMINED BY AASHTO T180.

4. NATURAL TOP SOIL GRADED TO 1" TO 2" BELOW GRADE WHERE SOD IS REQUIRED.

5. FILL PLACED IN 12" LIFTS (LOOSE MEASURE), COMPACTED TO DENSITY EQUAL TO SURROUNDING MATERIAL BUT NOT LESS THAN 98% OF MAXIMUM DENSITY AS DETERMINED BY AASHTO T180.

6. EXCAVATIONS SHALL BE DEWATERED, WHERE APPLICABLE, TO ENABLE PIPE AND APPURTENANCES TO BE INSTALLED FREE OF WATER.

7. BEDDING AND BACKFILL MATERIAL SHALL BE AS SPECIFIED.

8. LIMEROCK BASE SHALL BE AS SPECIFIED.

9. TYPE S-III OR SP 9.5 ASPHALTIC CONCRETE SHALL BE AS SPECIFIED. PAVEMENT PATCH THICKNESS TO MATCH EXISTING PAVEMENT THICKNESS, BUT IN NO CASE LESS THAN 1-1/2".

10. OUTLINE OF TRENCH EXCAVATION IS FOR ILLUSTRATIVE PURPOSES ONLY. ACTUAL TRENCH WIDTH AND SHAPE WILL VARY WITH SOIL CONDITIONS. TRENCH EXCAVATION SHALL BE COMPLETED IN ACCORDANCE WITH THE "FLORIDA TRENCH SAFETY ACT" AND "OSHA TRENCH EXCAVATION STANDARDS".

11. BEDDING MATERIAL FOR TYPICAL GRAVITY PIPE INSTALLATION AND ANY PIPE INSTALLATION WHERE UNSUITABLE TRENCH BOTTOM CONDITIONS ARE FOUND SHALL BE CRUSHED LIMEROCK (MAXIMUM SIZE 3/4"). BEDDING SHALL BE PLACED IN LIFTS NOT TO EXCEED 6" AND COMPACTED TO 98% OF THE MATERIAL'S MAXIMUM DENSITY AS DETERMINED BY ASTM D-1557 (AASHTO T-180).

*12. ROOT BARRIER IS REQUIRED FOR APPROVED TREE INSTALLATION CLOSER THAN 10 FEET FROM UTILITY FACILITIES.

13. APPROVED MAGNETIC TAPE IS REQUIRED FOR : ALL POTABLE WATER MAINS, FORCE MAINS AND RECLAIMED WATER MAINS. THE TAPE SHALL BE INSTALLED MAX. 24" BELOW FINISHED GRADE.

14. CONTINUOUS 4" WIDE PAINT STRIPING IS REQUIRED FOR DIP/PCCP WATER MAINS (BLUE), DIP SEWER MAINS (GREEN), AND DIP RECLAIMED WATER MAINS (PURPLE).

15. PERMANENT ABOVE GROUND UTILITY MARKER SHALL BE INSTALLED IF REQUIRED BY PROPERTY OWNER GRANTING THE PIPE INSTALLATION PERMIT.

G01

TYPICAL UTILITY TRENCH BACKFILL AND BEDDING

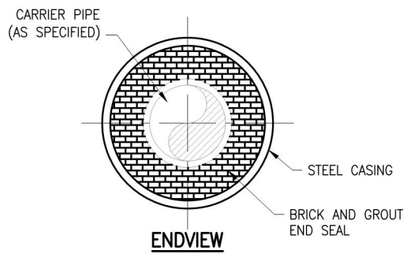

ENDVIEW

CARRIER PIPE SIZE	STEEL CASING INSIDE DIA (MIN)	MINIMUM WALL THICKNESS
4"	12"	.250
6"	16"	.250
8"	18"	.250
10"	20"	.250
12"	24"	.250
14"	24"	.250
16"	30"	.250

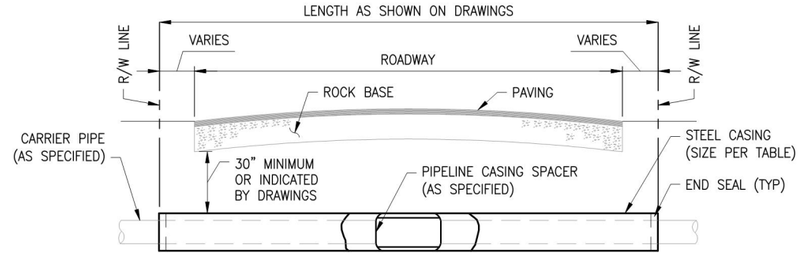

PROFILE

NOTES:

1) CARRIER PIPE JOINTS SHALL BE RESTRAINED JOINTS AS SPECIFIED. RESTRAINED JOINT REQUIREMENT SHALL ALSO INCLUDE ALL PIPE JOINTS WITHIN 20 FEET OF THE END SEAL (MINIMUM).

2) JACK AND BORE CASING AND ACCESSORIES SHALL BE AS SPECIFIED.

3) INSTALLATION OF JACK AND BORE CASING ONLY ALLOWED PER VILLAGE AND ENGINEER'S APPROVAL.

4) A TO-SCALE PROFILE DRAWING FOR EACH UTILITY MAIN JACK AND BORE ARE REQUIRED. ALL RELEVANT DATA MUST BE SHOWN (LENGTH AND SIZE OF CASING, PIPE CONFLICTS, ELEVATIONS, ETC.).

5) THICKER WALL CASINGS AND LARGER COVER OVER CASING MAY BE REQUIRED BY THE RIGHT-OF-WAY AUTHORITY.

6) STEEL CASING SHALL BE COATED INSIDE AND OUTSIDE WITH COAL TAR EPOXY (MIN. 16 MILS DFT).

7) STEEL CASINGS SHALL CONFORM TO THE REQUIREMENTS OF ASTM DESIGNATION A139 (STRAIGHT SEAM PIPE ONLY) GRADE "B" WITH A MINIMUM YIELD STRENGTH OF 35,000 PSI.

8) STAINLESS STEEL CASING SPACER (CASCADE OR EQUAL).

G02

JACK AND BORE CASING INSTALLATION

DSGN: 2 - Design by
DR: 3 - Drawn by
CHK: 4 - Checked by
APVD: 5 - Approved by

VERIFY SCALE
1"
BAR IS ONE INCH ON ORIGINAL DRAWING. ADJUST SCALES AS NECESSARY.

No.	DATE	REVISIONS	BY	APVD
		FINAL SUBMITTAL		

CONSULTANT

VILLAGE OF PALM SPRINGS

VILLAGE UTILITY STANDARDS UPDATED MAY 2019

STANDARD DETAILS GENERAL

DWG NO. 3 OF 46
SHEET GEN-01
PROJ. NO. 400-080.00
DATE JULY 2, 2019

File name: C:\Civil 3D Projects\400-080.01_Village Utility Standards Update - 2018\01_Working\400-080.01_General Details.dwg; Plotted @: 8/23/2019 2:00:19 PM; Scale multiplier: 0.5; Printed by: Ricardo Paez; Milestone: FINAL SUBMITTAL

FINAL SUBMITTAL

GENERAL NOTES AND SPECIFICATIONS

PRE–CONSTRUCTION ACTIVITIES

A. A PRE–CONSTRUCTION CONFERENCE WITH THE VILLAGE, ENGINEER OF RECORD, AND CONTRACTOR SHALL BE HELD PRIOR TO BEGINNING OF UTILITY CONSTRUCTION.

B. SHOP DRAWINGS SHALL BE SUBMITTED AND APPROVED BY THE VILLAGE AND ENGINEER OF RECORD PRIOR TO UTILITY CONSTRUCTION INCLUDING: PRE–CONSTRUCTION VIDEO AND ALL MATERIALS BEING USED IN THE PROJECT.

INSPECTIONS

A. THE CONTRACTOR SHALL NOTIFY THE VILLAGE OF PALM SPRINGS AND THE ENGINEER OF RECORD AT LEAST 48 HOURS PRIOR TO BEGINNING CONSTRUCTION AND PRIOR TO ANY REQUIRED INSPECTION OF THE CONSTRUCTED UTILITY IMPROVEMENT.

B. THE CONTRACTOR SHALL NOTIFY THE VILLAGE OF PALM SPRINGS AND THE ENGINEER OF RECORD NO LATER THAN 48 HOURS PRIOR TO MAKING CONNECTIONS TO EXISTING SYSTEMS.

SHOP DRAWINGS

A. PRIOR TO UTILITY CONSTRUCTION OR INSTALLATION, SHOP DRAWINGS SHALL BE SUBMITTED TO AND REVIEWED/APPROVED BY THE ENGINEER OF RECORD INCLUDING BUT NOT LIMITED TO: PRE–CONSTRUCTION VIDEO, VALVES, FIRE HYDRANTS, TAPPING SLEEVES AND VALVES, CORPORATION STOPS, PIPING MATERIALS AND FITTINGS, MANHOLES AND MISCELLANEOUS ACCESSORIES, AS APPLICABLE.

MAINTENANCE OF TRAFFIC

A. TRAFFIC REGULATION

1. THE CONTRACTOR SHALL BE RESPONSIBLE FOR SAFE MAINTENANCE OF PEDESTRIAN AND VEHICULAR TRAFFIC AT ALL TIMES DURING THE DURATION OF THE PROJECT.
2. MAINTENANCE OF TRAFFIC IN THE PUBLIC RIGHT–OF–WAY SHALL BE IN ACCORDANCE WITH THE MANUAL OF UNIFORM TRAFFIC CONTROL DEVICES (MUTCD), FDOT STANDARD INDEX 600 SERIES, AND PALM BEACH COUNTY ENGINEERING – TRAFFIC.
3. ALL OPEN TRENCHES AND EXCAVATIONS ADJACENT TO ROADWAYS OR WALKWAYS SHALL BE PROPERLY MARKED AND BARRICADED TO ASSURE THE SAFETY OF BOTH VEHICULAR AND PEDESTRIAN TRAFFIC.
4. NO TRENCHES OR EXCAVATIONS NEAR WALKWAYS OR IN ROADWAYS OR THEIR SHOULDERS SHALL BE LEFT OPEN DURING NIGHTTIME HOURS WITHOUT EXPRESS PERMISSION OF THE VILLAGE OF PALM SPRINGS OR PALM BEACH COUNTY ENGINEERING DEPARTMENT.

PROJECT CLOSE–OUT

A. CLEANING UP

1. DURING CONSTRUCTION, THE PROJECT SITE AND ALL ADJACENT AREAS SHALL BE MAINTAINED IN A NEAT AND CLEAN MANNER. UPON FINAL CLEAN UP, THE PROJECT SITE SHALL BE LEFT CLEAR OF ALL SURPLUS MATERIAL OR TRASH.
2. THE CONTRACTOR SHALL RESTORE OR REPLACE, WHEN AND AS DIRECTED BY THE ENGINEER, ANY PUBLIC OR PRIVATE PROPERTY DAMAGED BY THE WORK, EQUIPMENT, EMPLOYEES OR THOSE OF SUBCONTRACTORS TO A CONDITION AT LEAST EQUAL TO THAT EXISTING IMMEDIATELY PRIOR TO THE BEGINNING OF OPERATIONS. TO THIS END, CONTRACTOR SHALL DO AS REQUIRED ALL NECESSARY ROADWAY OR DRIVEWAY, SIDEWALK, AND LANDSCAPE WORK. SUITABLE MATERIALS AND METHODS SHALL BE USED FOR SUCH RESTORATION.
3. WHERE MATERIAL OR DEBRIS HAS WASHED OR FLOWED INTO OR BEEN PLACED IN WATER COURSES, DITCHES, SWALES, DRAINS, CATCH BASINS, OR ELSEWHERE AS A RESULT OF CONTRACTOR'S OPERATIONS, SUCH MATERIAL OR DEBRIS SHALL BE REMOVED AND SATISFACTORILY DISPOSED OF DURING PROGRESS OF THE WORK AND THE AREA KEPT IN A CLEAN AND NEAT CONDITION.

GENERAL

A. ALL CONSTRUCTION MATERIALS AND METHODS SHALL BE IN ACCORDANCE WITH VILLAGE DESIGN CRITERIA, SPECIFICATIONS, AND CONSTRUCTION STANDARDS.

B. THE CONTRACTOR SHALL COMPLY WITH ALL CONDITIONS AND REQUIREMENTS OF ALL PERMITS OBTAINED FOR THE PROJECT.

C. THE CONTRACTOR SHALL OBTAIN THE SERVICES OF A PROFESSIONAL LAND SURVEYOR LICENSED IN THE STATE OF FLORIDA FOR LAYOUT.

D. ALL MATERIALS, COATINGS, AND CHEMICALS THAT CONTACT DRINKING WATER SHALL BE IN CONFORMANCE WITH ANSI/NSF STANDARD 61.

REFERENCE DATA

A. ALL ELEVATIONS SHALL BE REFERENCE TO NORTH AMERICAN VERTICAL DATUM (NAVD) 1988.

EXISTING CONDITIONS

A. LOCATIONS, ELEVATIONS DIMENSIONS, AND MATERIAL OF EXISTING UTILITIES ARE BASED ON THE BEST INFORMATION AVAILABLE AT THE TIME OF THE PREPARATION OF THESE DRAWINGS BUT ARE NOT PURPORTED TO BE ABSOLUTELY CORRECT. THERE MAY BE OTHER UTILITIES IN THE PROJECT AREA. THE CONTRACTOR SHALL VERIFY, PRIOR TO CONSTRUCTION, THE LOCATIONS, ELEVATIONS, DIMENSIONS, AND MATERIAL OF EXISTING UTILITIES (WETHER OR NOT SHOWN ON THE DRAWINGS) AFFECTING HIS WORK.

UTILITY COORDINATION

A. THE CONTRACTOR SHALL NOTIFY ALL UTILITIES NEAR THE PROJECT AREA AT LEAST 48 HOURS PRIOR TO CONSTRUCTION. THIS SHALL INCLUDE NOTIFYING "SUNSHINE STATE ONE CALL OF FLORIDA" AT LEAST 48 HOURS PRIOR TO ANY DIGGING WORK TO HAVE ALL KNOWN UTILITIES LOCATED.

B. THE CONTRACTOR SHALL PRESERVE AND MAINTAIN EXISTING UTILITIES STRUCTURES, AND OTHER FEATURES WITHIN THE PROJECT AREA. ANY DAMAGE SHALL BE REPAIRED BY AND AT THE EXPENSE OF THE CONTRACTOR TO THE SATISFACTION OF THE DISTRICT.

VERTICAL SEPARATION

A. FOR WATER MAINS CROSSING SEWERS, A MINIMUM OF 18–INCHES SHALL BE MAINTAINED FROM THE OUTSIDE OF WATER MAIN TO THE OUTSIDE OF SEWER MAIN. AT THE CROSSING, ONE FULL LENGTH OF WATER MAIN SHALL BE LAID IN SUCH A WAY THAT BOTH JOINTS WILL BE AS FAR FROM THE SEWER MAIN AS POSSIBLE.

B. FOR WATER MAINS CROSSING STORM SEWERS AND RECLAIMED WATER MAINS, A MINIMUM OF 12–INCHES SHALL BE MAINTAINED FROM THE OUTSIDE OF WATER MAIN TO THE OUTSIDE OF STORM SEWER RECLAIMED WATER MAIN. AT THE CROSSING, ONE FULL LENGTH OF WATER MAIN SHALL BE LAID IN SUCH A WAY THAT BOTH JOINTS WILL BE AS FAR FROM THE STORM SEWER OR RECLAIMED WATER MAIN AS POSSIBLE.

C. SANITARY SEWERS, FORCE MAINS, AND STORM SEWERS SHOULD CROSS UNDER WATER MAINS WHEREVER POSSIBLE.

D. WHERE IS NOT PRACTICAL TO MEET THESE PARAMETERS, SPECIFIC REQUIREMENTS FROM REGULATORY AGENCIES MUST BE FOLLOWED WITH PRIOR APPROVAL FROM THE VILLAGE.

DEWATERING AND EROSION CONTROL

A. THE CONTRACTOR IS RESPONSIBLE FOR OBTAINING A DEWATERING PERMIT THROUGH THE SOUTH FLORIDA WATER MANAGEMENT DISTRICT, SHOULD DEWATERING ACTIVITIES BE REQUIRED.

B. THE CONTRACTOR SHALL BE RESPONSIBLE FOR THE SELECTION, INSTALLATION MAINTENANCE AND SATISFACTORY OPERATION OF EROSION AND SEDIMENT CONTROL DEVICES/SYSTEMS IN ACCORDANCE WITH SFWMD REQUIREMENTS.

C. ANY DISCHARGE FOR DEWATERING ACTIVITIES SHALL BE FLITTERED AND CONVEYED TO A SEDIMENTATION BASIN IN A MANNGER WHICH PREVENTS EROSION AND TRANSPORTATION OF SUSPENDED SOLID TO OUTFALLS.

D. THE CONTRACTOR SHALL REMOVE THE DEWATERING, EROSION CONTROL, AND SEDIMENT CONTROL DEVICES/SYSTEMS AFTER COMPLETION OF CONSTRUCTION AND ONLY WHEN THE AREAS HAVE BEEN STABILIZED.

DSGN: 2 - Design by DR: 3 - Drawn by CHK: 4 - Checked by APVD: 5 - Approved by	VERIFY SCALE 1" BAR IS ONE INCH ON ORIGINAL DRAWING. ADJUST SCALES AS NECESSARY.	No.	DATE	FINAL SUBMITTAL REVISIONS	BY	APVD	CONSULTANT		**VILLAGE OF PALM SPRINGS** VILLAGE UTILITY STANDARDS UPDATED MAY 2019	SPECIFICATIONS - GENERAL	DWG NO. 5 OF 46 SHEET SPEC-01 PROJ. NO. 400-080.00 DATE JULY 2, 2019

POTABLE WATER SYSTEM

POLYVINYL CHLORIDE (PVC) PIPE

A. PVC WATER MAIN 4–INCH TO 12–INCH DIAMETER SHALL BE DIMENSIONAL RATIO (DR)–18 MANUFACTURED TO DUCTILE IRON PIPE OUTSIDE DIMENSIONS AND IN COMPLIANCE WITH AMERICAN WATER WORKS ASSOCIATION (AWWA) STANDARD C900 (PRESSURE CLASS 150). THE PIPE SHALL HAVE AN INTEGRAL BELL END AND GASKET SEAL WITH JOINT IN COMPLIANCE WITH THE REQUIREMENTS OF AMERICAN SOCIETY FOR TESTING AND MATERIALS (ASTM) D3139. PIPE AND FITTINGS MUST BE ASSEMBLED WITH NONTOXIC LUBRICANT. THE PIPE COLOR SHALL BE BLUE WITH "WATER MAIN" PERMANENTLY PRINTED ON THREE SIDES OF THE ENTIRE LENGTH OF PIPE. THE PIPE SHALL BE APPROVED BY THE NATIONAL SANITATION FOUNDATION FOR USE AS A POTABLE WATER MAIN.

B. PVC WATER MAIN 14–INCH TO 20–INCH DIAMETER SHALL BE DR–18 MANUFACTURED TO DUCTILE IRON PIPE OUTSIDE DIMENSIONS AND IN COMPLIANCE WITH AWWA C905 (PRESSURE TESTING 235). THE PIPE SHALL HAVE AN INTEGRAL BELL END AND GASKET SEAL WITH JOINT IN COMPLIANCE WITH THE REQUIREMENTS OF AMERICAN SOCIETY FOR TESTING AND MATERIALS (ASTM) D3139. THE PIPE SHALL BE APPROVED BY THE NATIONAL SANITATION FOUNDATION FOR USE AS A POTABLE WATER MAIN. THE PIPE COLOR SHALL BE BLUE WITH "WATER MAIN" PERMANENTLY PRINTED ON THREE SIDES OF THE ENTIRE LENGTH OF PIPE.

C. CONNECTIONS FOR PIPE 2–INCH OR GREATER IN DIAMETER SHALL BE RUBBER COMPRESSION RING TYPE. PIPE SHALL BE EXTRUDED WITH INTEGRAL THICKENED WALL BELLS WITHOUT INCREASE IN DIMENSION RATIO (DR). RUBBER RING GASKETS SHALL CONSIST OF SYNTHETIC COMPOUNDS MEETING THE REQUIREMENTS OF ASTM DESIGNATION D869 AND SUITABLE FOR THE DESIGNATED SERVICE.

D. PUSH–ON JOINT RESTRAINS SHALL BE EBAA SERIES 1900 FOR C900 PIPE AND SERIES 1100HV FOR C905 PIPE.

E. FITTINGS: DUCTILE IRON FITTINGS SHALL BE USED ON ALL PVC C900 AND C905 MAINS. FITTINGS SHALL BE AS SPECIFIED BELOW.

DUCTILE IRON PIPE

A. DUCTILE IRON PIPE SHALL BE REQUIRED IN THE FOLLOWING CIRCUMSTANCES:

1. UNDERNEATH PAVED SURFACES.
2. FORCE MAINS 24–INCHES IN DIAMETER AND LARGER.
3. WITHIN 10–FEET OF WASTEWATER FACILITIES OR PIPES.
4. WITHIN 15–FEET OF BUILDINGS, CANALS OR LAKES.
5. CROSSINGS UNDER POTABLE WATER OR STORM PIPES IN ACCORDANCE WITH PARALLEL/HORIZONTAL SEPARATION REQUIREMENTS.
6. CROSSINGS OVER POTABLE OR STORM PIPES IN ACCORDANCE WITH PARALLEL/HORIZONTAL SEPARATION REQUIREMENTS.
7. CARRIER PIPE FOR JACK AND BORES (RESTRAINED JOINTS).
8. AERIAL CROSSINGS.
9. WITHIN 500 FEET OF GAS STATION OR UNDERGROUND FUEL STORAGE TANK, WITH EPDM OR VITON GASKETS.
10. DUCTILE IRON PIPE MAY BE MANDATED BY THE VILLAGE IN ANY INSTANCE OF OFF–SITE OR ON–SITE CONSTRUCTION WHERE FUTURE ABUSE TO THE LINE IS POSSIBLE DUE TO LOCATION OR CIRCUMSTANCES, EXTENSIVE LENGTH UNDER PAVEMENT, OR IN PRIVATE PROPERTY AWAY FROM COUNTY RIGHTS–OF–WAY.

DUCTILE IRON PIPE POTABLE WATER SYSTEM

A. DUCTILE IRON PIPE WATER MAIN: PIPE MATERIALS SHALL CONFORM TO THE REQUIREMENTS OF ANSI/AWWA C151/A21.51, LATEST REVISIONS, AND UNLESS OTHERWISE NOTED HEREIN THIS SPECIFICATION OR THE DRAWINGS, ALL DUCTILE IRON PIPE SHALL BE AS FOLLOWS:

NOMINAL DIAMETER	MINIMUM PRESSURE CLASS	SPECIAL CASES THICKNESS CLASS
3" THRU 12"	350 PSI	–
14" THRU 24"	250 PSI	–
FLANGED PIPE (ALL DIAMETERS)	––	53 (MIN)

B. CEMENT: CEMENT FOR MORTAR LINING SHALL CONFORM TO THE REQUIREMENTS OF ANSI/AWWA C104/A21.4, LATEST REVISION; PROVIDED THAT CEMENT FOR MORTAR LINING SHALL BE TYPE II OR V. FLY ASH OR POZZOLAN SHALL NOT BE USED AS A CEMENT REPLACEMENT.

C. PUSH–ON PIPE JOINTS (NON–RESTRAINED TYPE) SHALL BE "FASTITE" AS MANUFACTURED BY AMERICAN CAST IRON PIPE COMPANY, "TYTON" AS MANUFACTURED BY U.S. PIPE AND FOUNDRY, OR EQUAL. PUSH–ON JOINTS SHALL MEET THE REQUIREMENTS OF ANSI/AWWA C111/A21.11, LATEST REVISION.

D. PUSH–ON JOINTS (RESTRAINED TYPE), 24–INCH AND SMALLER, SHALL USE "FAST–GRIP" GASKET SYSTEM BY AMERICAN CAST IRON PIPE COMPANY, "FIELD LOK" GASKET SYSTEM BY U.S. PIPE AND FOUNDRY, OR EQUAL.

E. BURIED PIPE SHALL HAVE SMOOTH DENSE EXTERIOR AND INTERIOR SURFACES AND SHALL BE FREE FROM FRACTURES. THE OUTSIDE COATING SHALL BE AN ASPHALTIC COATING AT LEAST 1 MIL THICK AND APPLIED TO THE PIPE AFTER LINING HAS BEEN PLACED. PAINT EXTERIOR OF PIPE BLUE ALONG THE ENTIRE LENGTH OF PIPE (3 STRIPES MINIMUM).

F. EXPOSED PIPING AND FITTINGS SHALL BE SHOP PRIMED WITH A CATALYZED RUST INHIBITIVE EPOXY PRIMER. MINIMUM DRY FILM THICKNESS SHALL BE 2–3 MILS. SURFACE PREPARATION SHALL BE WHITE METAL BLAST CLEANING IN ACCORDANCE WITH STEEL STRUCTURES PAINTING COUNCIL NO. 10 (SSPC–SP10). PRIMER SHALL BE COMPATIBLE FOR USE WITH FINAL COATINGS AS SPECIFIED.

DUCTILE IRON MECHANICAL JOINT (MJ) FITTINGS

A. MECHANICAL JOINT FITTINGS (3–INCH THROUGH 24–INCH) SHALL BE DUCTILE IRON COMPACT FITTINGS MANUFACTURED IN ACCORDANCE WITH ANSI/AWWA C153/A21.53, LATEST REVISION, WITH A PRESSURE RATING OF 350 PSI. FITTINGS SHALL HAVE MECHANICAL JOINTS IN ACCORDANCE WITH ANSI/AWWA C111/A21.11, LATEST REVISION.

B. FITTINGS SHALL BE COATED AND LINED AS SPECIFIED FOR THE APPLICABLE PIPE APPLICATION.

MECHANICAL JOINT RESTRAINTS

A. RESTRAINED MECHANICAL JOINTS SHALL BE UTILIZED FOR ALL FITTINGS AND VALVES.

B. RESTRAINT OF MECHANICAL JOINTS ON DUCTILE IRON PIPE SHALL BE ACCOMPLISHED BY USING A MEGALUG SERIES 1100 RESTRAINING FOLLOWER GLAND AS MANUFACTURED BY EBAA IRON SALES, INC. OR EQUAL.

C. RESTRAINT OF MECHANICAL JOINTS ON PVC PIPE SHALL BE ACCOMPLISHED BY USING A MEGALUG SERIES 1100 RESTRAINING FOLLOWER GLAND AS MANUFACTURED BY EBAA IRON SALES, INC. OR EQUAL.

D. MECHANICAL JOINTS FOR FITTINGS AND VALVES SHALL MEET THE REQUIREMENTS OF ANSI/AWWA C111/A21.11, LATEST REVISION.

POLYETHYLENE TUBING

A. POLYETHYLENE TUBING SHALL ONLY BE USED FOR SERVICE CONNECTIONS, BLOW–OFFS, AND BACTERIOLOGICAL SAMPLE POINTS. POLYETHYLENE TUBING SHALL CONFORM TO ANSI/NSF61 AND AWWA C901 SUBJECT TO THE FOLLOWING CRITERIA: STANDARD CODE DESIGNATION PE3408, PIPE CLASS 200, AND DR 9 AND ASTM 3350 (UV PROTECTION).

B. TUBING SHALL BEAR IDENTIFYING MARKINGS, WHICH SHALL REMAIN LEGIBLE DURING NORMAL HANDLING, STORAGE, AND INSTALLATION, AND WHICH HAVE BEEN APPLIED IN A MANNER THAT WILL NOT REDUCE THE STRENGTH OF THE PRODUCT OR OTHERWISE DAMAGE THE TUBING. MARKING ON THE TUBE SHALL INCLUDE THE FOLLOWING AND SHALL BE APPLIED AT INTERVALS OF NOT MORE THAT 5 FEET: NOMINAL SIZE, MATERIAL CODE DESIGNATION, DIMENSION RATIO, PRESSURE CLASS, MANUFACTURER'S NAME OR TRADE MARK AND PRODUCTION RECORD CODE, AND SEAL (MARK) OF THE TESTING AGENCY THAT CERTIFIED THE SUITABILITY OF THE TUBING MATERIAL FOR POTABLE WATER PRODUCTS.

B. JOINTS POLYETHYLENE TUBING SHALL BE OF THE COMPRESSION TYPE UTILIZING A TOTALLY CONFINED GRIP SEAL AND COUPLING NUT. STAINLESS STEEL TUBE STIFFENER INSET SHALL ALSO BE USED FOR TUBING SERVICES.

C. ALL FITTINGS AND STOPS TO BE HIGH QUALITY WATER WORKS BRASS. NO PVC FITTINGS OR ADAPTERS WILL BE PERMITTED. FITTINGS SHALL BE BRASS EQUIPPED WITH COMPRESSION TYPE CONNECTORS.

VALVE BOXES

A. VALVE BOXES SHALL BE OF THE HEAVY DUTY TWO–PIECE ADJUSTABLE SCREW TYPE, CAST IRON, WITH 5–1/4–INCH SHAFT OF APPROPRIATE LENGTH FOR THE INSTALLATION. EXTENSION PIECES, IF REQUIRED, SHALL BE THE MANUFACTURER'S STANDARD TYPE. VALVE BOX TOPS SHALL HAVE RAISED LETTERS SAYING "WATER". BOXES IN TRAFFIC AREAS SHALL HAVE BOLT DOWN COVERS. VALVE BOXES SHALL BE AS MANUFACTURED BY TYLER UNION, OR EQUAL.

GATE VALVES 4" THROUGH 12"

A. RESILIENT–SEATED GATE VALVES MUST BE WEDGE TYPE CONFORMING TO ANSI/AWWA C509, LATEST REVISION, AND UL262 FOR 3–INCH AND LARGER BURIED SERVICE. RESILIENT–SEATED GATE VALVES, WEDGE–TYPE, SHALL HAVE A CAST OR DUCTILE IRON BODY AND BONNET, RUBBER–COATED CAST IRON DISC, MECHANICAL JOINT ENDS, NON–RISING STEM, O–RING SEALS, BRONZE STEM NUT, FLANGED BONNET AND 2–INCH SQUARE OPERATING NUT. ALL FERROUS SURFACES, INTERIOR AND EXTERIOR, SHALL RECEIVE A MINIMUM 8 MIL FUSION–BONDED EPOXY COATING CONFORMING TO AWWA C550, LATEST REVISION.

B. ALL VALVES MUST BE UL LISTED AND FM APPROVED. AWWA, UL–FM DESIGNATION MUST BE CAST INTO VALVE BODY.

C. BURIED VALVES SHALL HAVE MECHANICAL JOINT ENDS AND BE EQUIPPED WITH NON RISING STEMS AND 2–INCH SQUARE OPERATING NUTS.

D. EXPOSED VALVES SHALL HAVE FLANGED JOINT ENDS AND BE EQUIPPED WITH RISING STEMS WITH OUTSIDE STEM AND YOKC (OSY) OPERATION.

E. VALVES SHALL BE AS MANUFACTURED BY AMERICAN FLOW CONTROL, MUELLER OR CLOW.

BUTTERFLY VALVES (BFV)

A. VALVES SHALL BE CAST OR DUCTILE IRON BODY; ALLOY CAST IRON OR DUCTILE IRON DISC MEETING ASTMA126 OR A536; ONE PIECE STAINLESS STEEL SHAFT; SHORT OR LONG BODY TYPE; WITH THE VALVE CLASS, SHAFT SIZE, AND OTHER SPECIAL REQUIREMENTS SELECTED IN ACCORDANCE WITH THE SPECIFIC DESIGN; AND SHALL COMPLY WITH THE PROVISIONS OF ANSI/NSF61 AND AWWA C504, "RUBBER SEATED BUTTERFLY VALVES".

B. THE VALVE DISC SHALL BE CAST IRON OR DUCTILE IRON PER ASTMA126 OR A536. THE VALVE DISC OR VALVE BODY SHALL BE FITTED WITH A RESILIENT SEAT OF EPDM OR VITON. THE VALVE SEAT SHALL BE DESIGNED TO PROVIDE BUBBLE TIGHT SHUT OFF IN BOTH DIRECTIONS.

C. THE VALVE SHAFT BEARING SHALL BE TEFLON LINED WITH A NON METALLIC FIBERGLASS COMPOSITE BACKING AND SHALL BE PERMANENTLY LUBRICATED. THE BEARINGS SHALL BE SLEEVE TYPE BEARINGS CONTAINED IN THE BUBS OF THE VALVE BODY.

D. THE VALVE SHAFT SEAL SHALL BE SELF COMPENSATING V–TYPE PACKING WITH A MINIMUM OF FOUR SEALING RINGS. THE SHAFT SEAL SHALL BE OF A DESIGN ALLOWING REPLACEMENT OF SEALS WITHOUT REMOVING THE VALVE SHAFT.

E. METALLIC COMPONENTS (E.G. DOWELS, PINS, ETC.) SHALL BE 304 SERIES STAINLESS STEEL. BRASS, BRONZE, AND COPPER ALLOY MATERIALS ARE NOT ACCEPTABLE.

F. VALVES SHALL OPEN COUNTERCLOCKWISE. OPERATORS SHALL COMPLY WITH AWWA C504 WITH 2–INCH SQUARE OPERATING NUT. OPERATORS SHALL BE FULLY GASKETED AND GREASE PACKED TO WITHSTAND AND EXTERNAL WATER PRESSURE OF 10 PSI.

G. OPERATORS SHALL BE CAPABLE OF DEVELOPING TORQUE'S LISTED IN TABLE 1 OF AWWA C504 FOR CLASS 150B VALVES. VALVE OPERATORS FOR VALVES 24–INCH AND SMALLER SHALL BE TRAVELING NUT OR WORM GEAR TYPE FULLY FIELD ADJUSTABLE STOPS SO THE OPERATORS DOES NOT HAVE TO BE DISSEMBLED FOR VALVE SEAT ADJUSTMENT. VALVES LARGER THAN 24–INCH SHALL BE EQUIPPED WITH WORM GEAR TYPE OPERATORS.

H. BURIED VALVES SHALL HAVE MECHANICAL JOINTS ENDS AND BE EQUIPPED WITH 2–INCH SQUARE OPERATING NUTS. EXPOSED VALVES SHALL HAVE FLANGED JOINTS ENDS AND BE EQUIPPED WITH HAND WHEEL OPERATORS.

I. VALVES SHALL BE AS MANUFACTURED BY DEZURIK, PRATT, OR VALMATIC.

AIR VALVES

A. GENERAL DESCRIPTION

1. ALL VALVES SHALL MEET OR EXCEED ALL APPLICABLE PROVISIONS OF THE LATEST REVISION OF ANSI/NSF61 AND AWWA C512, STANDARD FOR AIR–RELEASED, AIR/VACUUM, AND COMBINATION AIR VALVES FOR WATERWORKS SERVICE. DESIGN PRESSURE SHALL BE 150 PSI. VALVE SHALL BE OPERABLE FOR WATER TEMPERATURES OF ABOVE FREEZING TO 125°F.
2. ALL VALVES SHALL CONSIST OF A FLOAT OR A FLOAT ASSEMBLY. VALVES SHALL BE IDENTIFIED PROPERLY IN PLATES ATTACHED PERMANENTLY ON THE VALVE BODY. THE BODY AND COVER SHALL BE CAST–IRON ASTM A126, CLASS B, OR ASTM A536 VALVE INTERIOR AND EXTERIOR SHALL HAVE FUSION BONDED EPOXY COATING. VALVES 3–INCHES AND SMALLER SHALL HAVE THREADED ENDS. VALVES 4–INCHES AND LARGER SHALL HAVE FLANGED ENDS. THREADED ENDS SHALL COMPLY WITH AMERICAN NATIONAL STANDARDS INSTITUTE (ANSI) B1.20.1. FLANGES SHALL COMPLY WITH ANSI B16.1, CLASS 125. ALL FLANGES SHALL BE FLAT FACED.
3. THE FLOAT SHALL BE 304 OR 316 STAINLESS STEEL. FOR VALVES WITH INLET SIZES LESS THAN 4–INCHES, THE FLOAT SHALL BE ABLE TO WITHSTAND A COLLAPSE PRESSURE OF 1,000 PSIG. FOR INLET SIZES FOUR–INCHES AND LARGER, THE FLOAT SHALL BE CAPABLE OF WITHSTANDING COLLAPSE PRESSURES OF 750 PSIG.
4. TRIM SHALL BE 304 OR 316 STAINLESS STEEL. THE VALVE SEAT SHALL BE EASILY REMOVED AND REPLACED IN THE FIELD.
5. VALVES WITH INLET SIZE 1–INCH OR LARGER SHALL HAVE A MINIMUM OF TWO 1/2–INCH NPT PLUGGED DRAIN/TEST PORTS, ONE NEAR THE BOTTOM OF THE VALVE BODY AND THE OTHER NEAR THE TOP. THE PLUG SHALL BE OF BRONZE, ASTM B584, ALLOY C83600.

B. VALVES SHALL BE VALMATIC 801A, APCO SERIES 400 SCAV, OR GA INDUSTRIES SINGLE BOD COMBINATION AIR VALVE.

SERVICE SADDLES

A. SADDLES FOR PVC OR DUCTILE IRON PIPE SHALL BE DOUBLE STRAP CAPABLE OF WITHSTAND 150 PSI (MINIMUM) INTERNAL PRESSURE WITHOUT LEAKAGE OR OVERSTRESSING. SADDLES SHALL HAVE FUSION BONDED EPOXY COATED BODIES WITH DOUBLE STAINLESS STEEL STRAPS. GASKETS SHALL BE EPDM.

VALVE STEM EXTENSIONS

A. WHERE THE DEPTH OF THE VALVE IS SUCH THAT ITS CENTERLINE IS MORE THAN 4 FEET BELOW GRADE, OPERATING EXTENSION STEMS SHALL BE PROVIDED TO BRING THE OPERATING NUT TO A POINT 6–INCH BELOW THE SURFACE OF THE GROUND AND/OR VALVE BOX COVER. EXTENSION STEMS SHALL HAVE 2–INCH STANDARD OPERATING NUT AND STEEL ALIGNMENT WASHER. EXTENSION STEMS SHALL BE BY THE GENERAL ENGINEERING COMPANY (GENECO), OR EQUAL.

BURIED VALVE IDENTIFICATION TAGS

A. BURIED VALVES: UNDERGROUND VALVE IDENTIFICATION MARKERS SHALL BE 3–INCH DIAMETER, 1/8–INCH THICK, SOLID HARD BRASS, WITH 1/4–INCH TAMPER–PROOF HOOK–END ROD ANCHOR. SURFACE TO BE ENGRAVED WITH 1/4–INCH TO 3/8–INCH CAPITAL LETTERS, APPROXIMATELY 0.015–INCH DEEP. HAND PUNCHED LETTERING IS NOT ACCEPTABLE SURFACE OF MARKER GROUND SMOOTH AND EPOXY COATED TO PREVENT TARNISHING. MARKERS SHALL BE WAGCO MARKERS OR EQUAL.

TAPPING SLEEVES AND VALVES

A. TAPPING SLEEVES SHALL BE FULL BODY DESIGN WITH WELDED LUGS AND NOTED FOR 150 PSI WORKING PRESSURE. TAPPING SLEEVE OUTLET SHALL BE FLANGED CONNECTION AND HAVE A BRASS TEST PLUG. THE SLEEVE BODY, LUGS, AND OUTLET SHALL BE CHEMICALLY PASSIVATED 304 STAINLESS STEEL. OUTLET FLANGE, BOLTS, AND NUTS SHALL BE 304 STAINLESS STEEL. THE TAPPING SLEEVE SHALL HAVE A FULL 360° GRIDDED STYRENE–BUTADIENE RUBBER (SBR) GASKET WITH ARMORS TO BRIDGE THE GAP BETWEEN LUGS.

B. TAPPING VALVES SHALL CONFORM TO AWWA C509, LATEST REVISION, RESILIENT SEATED GATE VALVES, EXCEPT AS MODIFIED FOR PASSAGE AND CLEARANCE OF TAPPING MACHINE CUTTERS. THE OPENING THROUGH THE VALVE SHALL BE A MINIMUM 1/4–INCH LARGER THAN NOMINAL VALVE DIAMETER. VALVES SHALL HAVE A FLANGED END TO MEET THE TAPPING SLEEVE. THE OPPOSITE END SHALL BE MECHANICAL JOINT.

C. STAINLESS STEEL SLEEVE STYLE CST–EX, EXTRA HEAVY, AS MANUFACTURED BY CASCADE WATERWORKS, MAY BE SUBSTITUTED FOR SPECIFIED DUCTILE IRON SLEEVE.

WATER SERVICE COMPONENTS (SINGLE AND DOUBLE)

A. ALL COMPONENTS ARE SPECIFIED IN THE STANDARD DETAILS.

B. ALL BRASS COMPONENTS THAT COME IN CONTACT WITH POTABLE WATER SHALL MEET NSF/ANSI STANDARD 61, ANNEX G AND/OR NSF/ANSI STANDARD 372 AS APPLICABLE. BRASS ALLOY SHALL NOT CONTAIN MORE THAN 0.25% LEAD BY WEIGHT.

BACKFLOW PREVENTERS (REDUCED PRESSURE ZONE TYPE)

A. 3/4–INCH – 2–INCH: WATTS MODEL LF009, ZURN WILKINS MODEL 975 XL2V, OR FEBCO MODEL 994.

B. 4–INCH AND LARGER: STAINLESS STEEL, WATTS MODEL 994 OR ZURN WILKINS MODEL 375 AST.

	DSGN: 2 - Design by DR: 3 - Drawn by CHK: 4 - Checked by APVD: 5 - Approved by	VERIFY SCALE 1" BAR IS ONE INCH ON ORIGINAL DRAWING. ADJUST SCALES AS NECESSARY.	No.	DATE	FINAL SUBMITTAL REVISIONS	BY	APVD	CONSULTANT		**VILLAGE OF PALM SPRINGS** VILLAGE UTILITY STANDARDS UPDATED MAY 2019	SPECIFICATIONS - WATER DISTRIBUTION	DWG NO. 6 OF 46 SHEET SPEC-02 PROJ. NO. 400-080.00 DATE JULY 2, 2019

POTABLE WATER SYSTEM (CONT.)

FIRE HYDRANTS

A. NOMINAL 5–1/4–INCH MAIN VALVE OPENING WITH 6–INCH BOTTOM CONNECTIONS. EQUIP WITH TWO (2) 2–1/2–INCH HOSE NOZZLES AND ONE (1) 4–1/2–INCH PUMPER NOZZLE. OPERATING NUT SHALL BE 1–1/2–INCH NATIONAL STANDARD PENTAGON NUT. THE MAIN VALVE SHALL BE EQUIPPED WITH O–RING SEALS AND SHALL OPEN WHEN TURNED TO THE LEFT (COUNTERCLOCKWISE). HYDRANTS SHALL BE OF THE BREAK–FLANGE OR SAFETY–TOP TYPE. HYDRANTS SHALL CONFORM TO ANSI/NSF61 AND AWWA C502, LATEST REVISION, AND THIS SPECIFICATION. THE DEPTH OF BURY SHALL BE AS SHOWN. NOZZLE THREADS SHALL BE AMERICAN NATIONAL STANDARD. THE INLET CONNECTION SHALL BE MECHANICAL JOINT.

B. HYDRANTS SHALL BE:

1. MUELLER CENTURION, MODEL A–423

FIRE HYDRANT PAINT

A. HYDRANTS SHALL BE THOROUGHLY CLEANED AND PAINTED IN ACCORDANCE WITH ANSI/AWWA C502, SECTION 4.2, PAINTING, LATEST REVISION.

1. PRIVATE HYDRANTS SHALL BE PAINTED YELLOW ABOVE THE GROUND LINE.
2. VILLAGE HYDRANTS SHALL BE PAINTED RED ABOVE THE GROUND LINE.

WATER DISTRIBUTION/FIRE SYSTEM COMPONENT PAINTING

A. ALL EXPOSED WATER DISTRIBUTION SYSTEM COMPONENTS SHALL BE SHOP PRIMED AS SPECIFIED HEREIN AND FINISH COATED AS FOLLOWS:

SURFACE PREPARATION:	PIPING, FITTINGS, AND VALVES SHALL BE SHOP PRIMED (SHOP PRIMED) APPLICABLE SPECIFICATIONS.
SURFACE PREPARATION (EXISTING):	REMOVE ALL DIRT, OIL, GREASE, CHEMICALS BY HIGH PRESSURE WATER BLASTING. REMOVE ALL RUST AND LOOSE DAMAGED PAINT BY ABRASIVE BLAST CLEANING PER SSPC–SP7 (BRUSH OFF BLAST) OR BY SSPC–SP2 AND 3 HAND & POWER TOOL CLEANING.
SPOT PRIME:	SPOT PRIME ALL BARE METAL AREAS WITH AN EPOXY MASTIC (TNEMEC SERIES 135, CHEMBUILD) AT 5.0 MILS DFT.
PRIME COAT:	EPOXY MASTIC (TNEMEC SERIES 135, CHEMBUILD) 5.0 MILS DFT.
SEALANT:	APPLY SINGLE COMPONENT SEALANT AT LOCATIONS WHERE TWO PIECES OF STEEL OVERLAP, BETWEEN FLANGES, AT BOLTS, ETC.
TOP COAT:	POLYURETHANE (TNEMEC SERIES 740 UVX, 3.0 MILS DFT.
MDFT:	8.0 MILS FOR THE TWO (2) COAT SYSTEM.

B. DO NOT PAINT EXPOSED STAINLESS STEEL, THREADS, ALUMINUM OR BRASS.

C. COLOR CODING SHALL BE AS FOLLOWS:

LOCATION OR COMPONENT	GENERIC COLOR	TNEMEC COLOR DESIGNATION
ABOVE GRADE DOMESTIC WATER SERVICE COMPONENTS	BLUE	SC06

LOCATING DEVICES

A. LOCATOR WIRE (OPEN CUT): LOCATOR WIRE SHALL BE INSTALLED ON ALL BURIED PIPING. LOCATOR WIRE SHALL BE #10 AWG INSULATED STRANDED COPPER WITH 30 MIL (MIN) PROTECTIVE JACKET THAT MATCHES THE COLOR CODING OF THE PIPE.

B. LOCATOR WIRE (DIRECTIONAL DRILL AND JACK AND BORE): LOCATOR WIRE INSTALLED IN DIRECTIONAL DRILL AND JACK AND BORE INSTALLATIONS SHALL BE SUITABLE FOR THE SERVICE AND HAVE A MINIMUM AVERAGE TENSILE BREAK LOAD OF 600 LBS. LOCATOR WIRE SHALL HAVE A 30 MIL (MIN) PROTECTIVE JACKET THAT MATCHES THE COLOR CODING OF THE PIPE.

C. WARNING TAPE: WARNING TAPE SHALL BE INSTALLED ON ALL BURIED PIPING. WARNING TAPE SHALL BE A 6–INCH WIDE AND MADE OF POLYETHYLENE 4 MIL THICK (MIN). WARNING TAPE SHALL BE A BRIGHT, FADE RESISTANT COLOR WITH THE APPROPRIATE LEGEND REPEATED CONTINUOUSLY THROUGHOUT THE ENTIRE LENGTH. WARNING TAPE FOR POTABLE WATER PIPE SHALL BE BLUE READING "CAUTION– BURIED WATER LINE BELOW". WARNING TAPE FOR RECLAIMED WATER PIPE SHALL BE PURPLE READING "CAUTION–BURIED RECLAIMED WATER LINE BELOW".

D. ELECTRONIC MARKING SYSTEM (EMS) LOCATORS: AN EMS LOCATOR SHALL BE PROVIDED ON ALL WATER, GRAVITY SEWER, AND VACUUM SEWER SERVICE CONNECTIONS DIRECTLY ABOVE THE PIPE AT THE ROW OR EASEMENT LINE. THE MARKER SHALL BE INSTALLED IN ACCORDANCE WITH THE MANUFACTURER'S REQUIREMENTS AND BE CAPABLE OF OPERATING AT A DEPTH OF 6 FEET BELOW THE GROUND SURFACE. THE MARKERS SHALL HAVE SEPARATE AND UNIQUE FREQUENCIES FOR WATER SERVICE CONNECTIONS AND FOR SEWER SERVICE CONNECTIONS.

E. REFLECTIVE PAVEMENT MARKERS (RPM): REFLECTIVE PAVEMENT MARKERS SHALL BE DURABLE, IMPACT RESISTANT, HIGHLY REFLECTIVE MARKERS USED FOR LONGITUDINAL LINES AND GORE MARKINGS ON NEW AND EXISTING ASPHALT OR CONCRETE ROAD SURFACES. MARKERS SHALL CONTAIN A STRONG BODY WITH TWO–WAY LENS. RPMS SHALL BE APPLIED USING BITUMEN OR EPOXY ADHESIVE.

DSGN: 2 - Design by DR: 3 - Drawn by CHK: 4 - Checked by APVD: 5 - Approved by	VERIFY SCALE 1" BAR IS ONE INCH ON ORIGINAL DRAWING. ADJUST SCALES AS NECESSARY.	No.	DATE	FINAL SUBMITTAL REVISIONS	BY	APVD	CONSULTANT		**VILLAGE OF PALM SPRINGS** VILLAGE UTILITY STANDARDS UPDATED MAY 2019	SPECIFICATIONS - WATER DISTRIBUTION	DWG NO. 7 OF 46 SHEET SPEC-03 PROJ. NO. 400-080.00 DATE JULY 2, 2019

WASTEWATER COLLECTION SYSTEM

PRECAST CONCRETE MANHOLE

A. PRECAST MANHOLES SHALL CONSIST OF A PRECAST REINFORCED BASE, CAST MONOLITHICALLY WITH A MINIMUM 4 FOOT BARREL SECTION, ADDITIONAL BARREL SECTIONS AND ROOF SLABS OR ECCENTRIC MANHOLE CONES. PRECAST MANHOLES SHALL CONFORM TO THE DIMENSIONS AND DETAILS SHOWN ON THE DRAWINGS WITH ALL NECESSARY OPENINGS FOR SEWER PIPE AND CASTINGS.

B. PRECAST CONCRETE MANHOLES SHALL CONFORM TO THE REQUIREMENTS OF ASTM C478, LATEST REVISION, EXCEPT THE MINIMUM WALL THICKNESS SHALL BE 8 INCHES MINIMUM.

C. JOINTS SHALL BE OF SUCH DESIGN AS WILL PERMIT EFFECTIVE JOINTING BY USING A CONTINUOUS ROUND COMPRESSION RING OF ELASTOMERIC MATERIAL. THE COMPRESSION RING SHALL BE UNIFORMLY COMPRESSED IN AN ANNULAR SPACE BETWEEN THE JOINING SURFACES TO FORM A CLOSING SEAL WHICH WILL BE, AND WILL REMAIN, WATERTIGHT.

D. PRECAST SANITARY SEWER MANHOLE SECTIONS SHALL BE PROTECTIVELY COATED AS SPECIFIED HEREIN UNDER MANHOLE COATINGS (INTERIOR) AND MANHOLE COATINGS (EXTERIOR).

E. MANHOLE STEPS SHALL NOT BE PROVIDED.

F. WHERE REQUIRED, INTERIOR DROP CHANNELS AND CONNECTIONS SHALL BE CONSTRUCTED IN ACCORDANCE WITH THE STANDARD DETAILS.

MANHOLE RING/COVER

A. FRAMES AND COVERS SHALL BE CAST FROM CLOSE-GRAINED, GREY CAST-IRON, CONFORMING TO ASTM-A48 CLASS 30, GRAY CAST IRON. CASTINGS SHALL BE FREE FROM BLOW HOLES, SHRINKAGES OR OTHER IMPERFECTIONS NOT TRUE TO PATTERN. ROUND FRAMES AND COVERS IN ROADWAY OR TRAFFIC AREAS SHALL HAVE MACHINED WEARING SURFACES SO THAT FITTING PARTS WILL NOT RATTLE OR ROCK UNDER TRAFFIC.

B. MANHOLE FRAMES AND COVERS SHALL BE USF 420 RING WITH GB-C COVER ORS, AS MANUFACTURED BY U.S. FOUNDRY MANUFACTURING CORPORATION, MIAMI, FLORIDA, OR EQUAL. COVER SHALL HAVE VILLAGE LOGO INSCRIBED THEREON, PER DETAILS.

FLEXIBLE MANHOLE CONNECTIONS (NEW)

A. PVC PIPE ENTERING OR LEAVING NEW PRECAST CONCRETE MANHOLES AND WETWELLS SHALL HAVE AN ELASTOMER; EPDM LOCK JOINT FLEXIBLE MANHOLE SLEEVE. SLEEVE SHALL CONFORM TO THE REQUIREMENTS OF ASTM C-923, LATEST REVISION. FLEXIBLE MANHOLE SLEEVE BE BY INTERPACE CORPORATION OR EQUAL.

EXISTING MANHOLE CONNECTIONS

A. PVC PIPE ENTERING OR LEAVING EXISTING MANHOLES AND WETWELLS SHALL HAVE AN EPOXY AND SAND-COATED PVC MANHOLE COUPLING. COUPLING SHALL BE BY JOHNS-MANVILLE OR EQUAL.

MANHOLE COATING (EXTERIOR)

A. SURFACE PREPARATION: ALL CURING OILS, FORM OILS, LAITENCE, SOLUBLE SALTS AND LOOSE CONCRETE MUST BE REMOVED. CONCRETE MUST BE DRY AND THOROUGHLY CLEAN BEFORE COATING.

B. SURFACE PROFILE: ICRI CSP1

C. PRIME COAT: NONE REQUIRED.

D. TOP COAT: TWO (2) COATS POLYAMIDE COAL TAR EPOXY (SERIES 46H-413 TNEME-TAR, SHERWIN WILLIAMS TARGUARD, OR EQUAL, AT 8.0 MILS DFT PER COAT.

E. MDFT: 16 MILS DFT FOR TWO (2) COAT SYSTEM. ALLOW MINIMUM 24 HOUR DRYING TIME BETWEEN COATS.

F. COLOR: FIRST COAT – RED
SECOND COAT – BLACK

MANHOLE COATING (INTERIOR)

A. SURFACE PREPARATION: ALL CURING OILS, FORM OILS, LAITANCE, SOLUBLE SALTS AND LOOSE CONCRETE MUST BE REMOVED. CONCRETE MUST BE DRY AND THOROUGHLY CLEAN BEFORE COATING.

B. SURFACE PROFILE: ICRI CSP4

C. PRIME COAT: NONE REQUIRED.

D. TOP COAT: TWO (2) COATS POLYAMIDE COAL TAR EPOXY (SERIES 46H-413 TNEME-TAR, SHERWIN WILLIAMS TARGUARD OR EQUAL, AT 8.0 MILS DFT PER COAT.

E. MDFT: 16 MILS DFT FOR TWO (2) COAT SYSTEM. ALLOW MINIMUM 24 HOUR DRYING TIME BETWEEN COATS.

F. COLOR: FIRST COAT – RED
SECOND COAT – BLACK

MANHOLE DROP PIPING

A. DROP PIPE AND FITTINGS SHALL BE STANDARD SERVICE SANITARY COLLECTION PIPE AS SPECIFIED HEREIN, SANITARY COLLECTION PIPE (STANDARD SERVICE).

SANITARY COLLECTION PIPE (STANDARD SERVICE)

A. PROVIDE POLYVINYL CHLORIDE PIPE CONFORMING TO THE REQUIREMENTS OF ASTM D 3034, LATEST REVISION, CLASS SDR 35 OR SDR26 SHALL BE USED ACCORDING TO DEPTH. MATERIAL FOR PVC PIPE SHALL CONFORM TO THE REQUIREMENTS OF ASTM D 1784, LATEST REVISION, FOR CLASS 12454-B OR 12454-C AS DEFINED THEREIN.

B. JOINTS OF PVC SANITARY SEWER COLLECTION PIPES AND FITTINGS SHALL BE ACCOMPLISHED BY A FACTORY FABRICATED, CONTINUOUS, FLEXIBLE RUBBER COMPRESSION RING OR GASKET PERMANENTLY ATTACHED TO THE BELL OF THE PIPE OR FITTING. JOINTS SHALL MEET THE REQUIREMENTS OF ASTM D 3212, LATEST REVISION AND ASTM F 477, LATEST REVISION.

C. ALL FITTINGS FOR PVC SANITARY SEWER COLLECTION PIPE SHALL CONFORM TO THE REQUIREMENTS OF ASTM D 3034, LATEST REVISION. THE RING GROOVE AND GASKET RING SHALL BE COMPATIBLE WITH PVC PIPE ENDS.

D. PIPE SHALL BE GREEN AND MARKED "SANITARY".

E. SANITARY SEWER COLLECTION PIPE AND FITTINGS SHALL BE AS MANUFACTURED BY JM EAGLE, DIAMOND PLASTICS, NORTH AMERICAN PIPE, OR EQUAL.

LATERAL CONNECTION COMPONENTS (NEW)

A. LATERAL PIPE AND FITTINGS SHALL BE PVC PIPE ASTM D3034, CLASS SDR35 SANITARY COLLECTION PIPE (STANDARD SERVICE) AS SPECIFIED HEREIN.

| | | |

FLUSHING, TESTING, AND DISINFECTION

FLUSHING

A. UPON COMPLETION OF THE PIPE INSTALLATION FOR ANY SERVICE, THE MAINS SHALL BE CANNON FLUSHED TO REMOVE DIRT AND ANY OTHER FOREIGN MATTER BY ACHIEVING A MINIMUM VELOCITY OF 5 FEET PER SECOND ON PIPE SIZES UP TO AND INCLUDING 12–INCHES AND 2.5 FEET PER SECOND ON PIPE GREATER THAN 12–INCHES. THE DURATION OF THE FLUSHING SHALL BE SUFFICIENT TO PROVIDE A MINIMUM FLUSH VOLUME EQUAL TO THREE TIMES THE INTERNAL VOLUME OF THE PIPELINE BEING FLUSHED. TEMPORARY FITTINGS, PIPE, ETC. MAY BE USED TO FACILITATE CANNON FLUSHING.

1. PRIOR TO THE ACTUAL LINE FLUSHING OPERATION, THE CONTRACTOR SHALL NOTIFY THE VILLAGE OF THE INTENDED WATER USE. NO FLUSHING SHALL TAKE PLACE WITHOUT A VILLAGE REPRESENTATIVE PRESENT.
2. FLUSHING WILL NOT BE SCHEDULED UNTIL THE VILLAGE HAS APPROVED PRELIMINARY RECORD DRAWINGS, UNLESS IT IS REQUIRED TO FACILITATE CONSTRUCTION OF WATER MAINS.
3. THE CONTRACTOR SHALL EXERCISE DUE CARE SO AS TO ENSURE THAT THE WATER USED IN FLUSHING DOES NOT CAUSE A NUISANCE OR INFLICT PROPERTY DAMAGE.

B. POLY–PIGGING (2X) IS REQUIRED FOR ALL WATER MAINS OR FORCE MAINS WHEN REQUESTED BY VILLAGE.

C. NO EXISTING VALVE SHALL BE OPERATED EXCEPT BY VILLAGE PERSONNEL.

HYDROSTATIC TESTING

WATER MAINS AND FORCE MAINS SHALL BE TESTED IN ACCORDANCE WITH ANSI/AWWA STANDARD C600 LATEST REVISION.

A. HYDROSTATIC TESTS:

1. AFTER A NEW WATER MAIN OR FORCE MAIN HAS BEEN LAID AND BACKFILLED, IT SHALL BE PUMPED TO A PRESSURE OF 150 PSI AND ALL VISIBLE LEAKS STOPPED BY APPROVED METHODS. DURING THE TEST, THE PRESSURE CANNOT DROP MORE THAN 2.5 PSI BELOW THE STARTING PRESSURE POINT.
2. A LEAKAGE TEST SHALL THEN BE CONDUCTED AT THE ABOVE MENTIONED PRESSURE AND NO INSTALLATION WILL BE ACCEPTABLE BY THE VILLAGE UNTIL THE LEAKAGE IS LESS THAN THE NUMBER OF GALLONS PER HOUR AS DETERMINED BY THE FORMULA:

   $$L = (S \times D \times \sqrt{P})/148{,}000$$

   IN WHICH L EQUALS THE ALLOWABLE LEAKAGE IN GALLONS PER HOUR; S IS THE LENGTH OF LINE IN FEET BEING TESTED; D IS THE NOMINAL DIAMETER OF THE PIPE IN INCHES; AND P IS THE AVERAGE TEST PRESSURE DURING THE LEAKAGE TEST IN POUNDS PER SQUARE INCH. THE TEST IS USUALLY MAINTAINED FOR TWO HOURS BUT IT MAY BE CONTINUED FOR ONE ADDITIONAL HOUR IF IT BECOMES APPARENT THAT THE LEAKAGE IS EQUAL TO OR GREATER THAN THE AMOUNT ALLOWABLE. WATER SUPPLIED TO THE MAIN DURING THE TEST TO MAINTAIN THE REQUIRED PRESSURE SHALL BE MEASURED BY A 5/8–INCH METER INSTALLED ON THE DISCHARGE SIDE OF THE TEST PUMP, OR BY PUMPING FROM A CALIBRATED CONTAINER.
3. EACH SECTION OF MAIN BEING TESTED SHALL BE LIMITED TO A MAXIMUM LENGTH OF 1000–FEET. ANY QUESTIONS PERTAINING TO PROCEDURES USED DURING THE TEST SHALL BE DIRECTED TO THE VILLAGE.
4. NO ALLOWABLE LEAKAGE SHALL BE PERMITTED FOR FIRE HYDRANTS.

B. BACTERIOLOGICAL TESTS (CONTRACTOR PAYS TESTING LABORATORY):

1. AFTER THE WATER MAINS HAVE SATISFIED THE LEAKAGE TESTING REQUIREMENTS THEY SHALL BE FLUSHED THROUGH OPENINGS OF THE REQUIRED SIZE AS DETAILED IN ANSI/AWWA STANDARD C651 LATEST REVISION. THE MAIN SHALL THEN BE DISINFECTED IN ACCORDANCE WITH THE PROVISIONS OF THE APPLICABLE SECTIONS OF THE ABOVE NAMED AWWA STANDARD. ON MAIN BREAKS, CUT–INS, ETC. A LIBERAL APPLICATION OF SODIUM HYPOCHLORITE SHALL BE MADE; 50 PPM CHLORINE DURING A 24 HOUR PERIOD.
2. MAINS SHALL NOT BE PUT INTO DOMESTIC SERVICE UNTIL THE NECESSARY BACTERIOLOGICAL SAMPLES HAVE BEEN APPROVED BY THE APPLICABLE REGULATORY AGENCIES.

WATER SERVICE LINES

A. HYDROSTATIC TESTING

1. HYDROSTATIC TESTING OF WATER SERVICE LINES SHALL BE DONE IN CONJUNCTION WITH THE TESTING OF THE LATERAL OR MAIN LINE. NO ADDITIONAL LEAKAGE ALLOWANCE WILL BE MADE FOR SERVICE LINES OR FIRE HYDRANTS.

B. DISINFECTION

1. DISINFECTION OF SERVICE LINES SHALL BE DONE IN CONJUNCTION WITH THE DISINFECTION OF THE LATERAL OR MAIN LINE. SUFFICIENT SAMPLING POINTS SHALL BE TAKEN FROM SERVICE LINE CONNECTIONS TO ASSURE UNIFORM RESULTS THROUGHOUT THE SYSTEM BEING TESTED.

GRAVITY SEWER MAIN TESTING

A. GENERAL

1. THE CONTRACTOR SHALL PERFORM LOW–PRESSURE AIR TESTING, INFILTRATION TESTING, TELEVISION INSPECTED, AND ALIGNMENT AND DEFLECTION TESTING IN THE PRESENCE OF REPRESENTATIVES FROM THE VILLAGE AND DEVELOPERS' ENGINEER–OF–RECORD.
2. TESTING SHALL NOT PROCEED UNTIL FACILITIES HAVE BEEN BACKFILLED AND THE LAYING OF ROADWAY BASE IS COMPLETE.
3. PIPE TESTING SHALL CLOSELY FOLLOW PIPE LAYING. NO MORE THAN 1,000 FEET OF PIPE SHALL REMAIN UNTESTED AT ANY TIME.

B. AIR TESTING

1. LOW–PRESSURE AIR TESTING SHALL BE IN ACCORDANCE WITH ASTM F1417. THE EQUIPMENT USED SHALL BE SPECIFICALLY DESIGNED AND MANUFACTURED FOR TESTING PIPE LINES WITH LOW–PRESSURE AIR AND SHALL BE PROVIDED WITH AN AIR REGULATOR VALVE OR AIR SAFETY VALVE SET TO PREVENT THE AIR PRESSURE IN THE PIPE LINE FROM EXCEEDING 8 PSIG.
2. THE FOLLOWING LOW–PRESSURE AIR TESTING PROCEDURES SHALL BE USED:
   a. ISOLATE EACH SECTION OF THE GRAVITY WASTEWATER MAIN TO BE TESTED BETWEEN MANHOLES USING INFLATABLE AIR PLUGS THAT ARE SECURELY PLACED AT THE ENDS OF THE SECTION OF THE MAIN TO BE TESTED.
   b. INTRODUCE AIR PRESSURE SLOWLY TO APPROXIMATE 4 PSIG.
   c. DETERMINE THE GROUND WATER ELEVATION ABOVE THE SPRING LINE OF THE PIPE. FOR EVERY FOOT OF GROUNDWATER ABOVE THE SPRING LINE OF THE PIPE, INCREASE THE STARTING AIR TEST PRESSURE BY 0.43 PSIG. DO NOT INCREASE THE PRESSURE ABOVE 8 PSIG.
   d. ALLOW THE PRESSURE TO STABILIZE FOR AT LEAST 5 MINUTES. ADJUST THE PRESSURE TO 3.5 PSIG OR INCREASE THE PRESSURE AS DETERMINED ABOVE WHEN GROUNDWATER IS PRESENT.
   e. START THE TEST.
   f. DETERMINE THE TEST DURATION FOR EACH SEWER SECTION WITH A SINGLE PIPE SIZE. SEE TABLE 1, SHEET SPEC–16. DO NOT MAKE ALLOWANCES FOR LATERALS.
   g. RECORD THE DROP IN PRESSURE DURING THE TEST PERIOD. IF THE AIR PRESSURE HAS DROPPED MORE THAN 1.0 PSIG. DURING THE TEST PERIOD, THE SECTION OF MAIN BEEN TESTED HAS FAILED. OTHERWISE, THE SECTION OF MAIN BEEN TESTED HAS PASSED.
   h. WHEN A SECTION OF MAIN FALLS THE TEST, THE SOURCE OF THE AIR LEAK SHALL BE DETERMINED, THE APPROPRIATE CORRECTIONS MADE, AND THE PIPE RETESTED.
   i. ALL TESTING RESULTS SHALL BE DOCUMENTED USING THE VILLAGE'S LOW PRESSURE AIR TEST FORM.
3. INFILTRATION: AFTER THE WORK IS COMPLETE, THE SEWERS OR SECTIONS SHALL BE TESTED FOR INFILTRATION. ANY SECTION IN WHICH INFILTRATION OF WATER IS DETECTED WILL BE REJECTED UNTIL CORRECTIVE WORK HAS BEEN PERFORMED. NO INFILTRATION WILL BE ALLOWED FOR ANY ONE TRUNK, MAIN, LATERAL, OR SEGMENT BETWEEN MANHOLES.

TELEVISION INSPECTION REPORT INFORMATION

A. MANHOLES: THE REPORT AND RECORDING SHALL START WITH ZERO (00+00) STATION NUMBERS AT EACH MANHOLE UPSTREAM AND END WITH THE STATION NUMBER AT THE NEXT DOWNSTREAM MANHOLE. IF AN INSPECTION HAS TO BE CONDUCTED STARTING AT THE DOWNSTREAM MANHOLE, A WRITTEN EXPLANATION MUST BE SUBMITTED TO THE INSPECTOR WITH THE REPORT AND RECORDING.

B. PIPE LINE: PROVIDE START AND END STATION NUMBERS FOR PIPE MATERIAL CHANGES.

C. TAPS: EACH TAP SHALL HAVE A STATION NUMBER SHOWN ON THE RECORDING AND COINCIDE WITH THE REPORT AND RECORD DRAWINGS. THE REPORT AND RECORDING SHALL INDICATE THE LOT NUMBER AND/OR ADDRESS THE TAP IS INTENDED TO SERVE.

D. DEAD–ENDS OR ABANDONMENTS: IF A FUTURE STUB, DEAN–END OR OBSTRUCTION CAUSE (NOT ENDING IN A MANHOLE), OR ABANDONMENT OF VIDEO DUE TO OBSTRUCTION ETC., A STILL IMAGE SHALL BE SHOWN ON THE REPORT AND RECORDING FOR INSPECTION. THE REPORT AND RECORDING SHALL INCLUDE AN EXPLANATION FOR WHAT IS SHOWN.

E. EXISTING SEWER SYSTEM: THE EXISTING SEWER SYSTEM MUST BE INSPECTED ANDSHOWN ON THE REPORT. THIS SHALL BE FROM THE TIE IN MANHOLE TO THE NEXT DOWNSTREAM MANHOLE. THE VILLAGE RESERVES THE RIGHT TO REQUEST ADDITIONAL TELEVISION INSPECTION INFORMATION OR REINSERTION TO INSURE AN ACCEPTABLE COMPLETION.

ALIGNMENT AND DEFLECTION

A. LINES SHALL SHOW FULL CIRCLE OF LIGHT WHEN LAMPED BETWEEN MANHOLES FOR LINE SECTIONS WITH COMPLETE PIPE REPLACEMENT.

1. DEFLECTION TESTING IS REQUIRED AFTER THE FINAL BACKFILL HAS BEEN IN PLACE AT LEAST 30 DAYS TO PERMIT STABILIZATION OFTHE SOIL–PIPE SYSTEM. A NINE POINT MANDREL SHALL BE PASSED THROUGH EACH NEW FLEXIBLE PIPE SECTION INSTALLED AFTER FULL BACKFILL HAS BEEN PLACED. THE MAXIMUM PIPE DIAMETER DEFLECTION SHALL NOT EXCEED 5%. A MECHANICAL PULLING DEVISE SHALL NOT BE USED TO CONDUCT DEFLECTION TESTS.

CONSTRUCTION TOLERANCES

A. THE FOLLOWING ARE THE ALLOWABLE LINE AND GRADE TOLERANCES FOR GRAVITY SEWER INSTALLATION AS IDENTIFIED BY THE AS–BUILT SURVEY AND TELEVISION INSPECTION REPORT. ANY PIPES OR MANHOLES SHALL BE RECONSTRUCTED OR REPLACED TO MEET THE ACCEPTANCE CRITERIA.

PIPE:

1. HORIZONTAL AND VERTICAL ALIGNMENT OF GRAVITY SEWER LINES SHALL NOT VARY FROM DESIGN LINE AND GRADE AN ANY POINT LONG THE PIPE BY MORE THAN 1% OF THE INSIDE DIAMETER OF THE PIPE OR 1/4–INCH, WHICHEVER IS LARGER.
2. THIS TOLERANCE IS ALLOWED FOR TRENCHED GRAVITY SEWER LINES ONLY IF THE DESIGN LINE AND GRADE ARE SUFFICIENT TO PREVENT BACKSLOPE WHEN TOLERANCE LIMITS ARE REACHED.
3. REVERSE SLOPE ON GRAVITY PIPE SHALL NOT BE ALLOWED AT ANY POINT ALONG THE PIPE.

MANHOLES

1. MANHOLE INVERT ELEVATIONS SHALL ADHERE TO THE TOLERANCES LISTED BELOW:

   HORIZONTAL SEWER
   DEFLECTION ANGLE: MINIMUM INVERT DROP

   0 TO 90 DEGREES: AVERAGE SLOPE BETWEEN INLET AND OUTLET PIPES
   10 TO 45 DEGREES: 0.05
   46 TO 90 DEGREES: 0.10

2. ALL INVERT SLOPES SHALL BE POSITIVELY SLOPING DOWNSTREAM. STANDING WATER CAUSED BY A REVERSE SLOPE SHALL NOT BE ALLOWED.

TESTING BACKFILL

A. COMPACTION AND DENSITIES TESTING

METHODS OF CONTROL AND TESTING OF BACKFILL CONSTRUCTION TO BE EMPLOYED IN THIS WORK ARE:

1. MAXIMUM DENSITY OF ALL BACKFILL MATERIAL SHALL BE DETERMINED BY ASSHTO T–180 (ASTM D 1557).
2. LABORATORY AND FIELD DENSITY TESTS, WHICH, IN THE OPINION OF THE VILLAGE ARE NECESSARY TO ESTABLISH COMPLIANCE WITH THE COMPACTION REQUIREMENTS OF THESE SPECIFICATIONS, SHALL BE MADE AT SUCH DEPTHS AND LOCATIONS AS SELECTED BY THE VILLAGE.
3. TRENCH BACKFILL WHICH DOES NOT COMPLY WITH THE SPECIFIED DENSITIES, AS INDICATED BY SUCH TESTS, SHALL BE REWORKED AND RECOMPACTED UNTIL THE REQUIRED COMPACTION IS SECURED, AT NO ADDITIONAL COST TO THE VILLAGE.
4. THE FIRST TEST SHALL BE 12–INCH ABOVE THE TOP OF PIPE OR THE WATER TABLE, AND IN 6–INCH LIFTS THEREAFTER.

B. BACKFILL TESTING FEES SHALL BE PAID BY CONTRACTOR (TESTING LAB SHALL BE APPROVED BY VILLAGE).

VACUUM SEWER – AIRVAC SUMP TESTING – 2–PIECE PITS

A. TWO SEPARATE SUMP TESTS SHALL BE PERFORMED. THE FIRST TEST SHALL BE DONE AFTER THE VALVE PIT BOTTOM HAS BEEN JOINED WITH THE COLLECTION SUMP BUT PRIOR TO ANY HOLES BEING FIELD CUT. THIS IS DONE TO TEST THE O–RING AND OVERALL WATER TIGHTNESS OF THE JOINT BETWEEN THESE TWO PARTS. THE SECOND TEST IS PERFORMED AFTER ALL HOLES IN THE SUMP HAVE BEEN FIELD CUT, GROMMETS AND STUB–OUT PIPES INSTALLED AND THE ENTIRE VALVE PIT ASSEMBLY INSTALLED IN THE GROUND. THIS TEST IS DONE TO TEST THE GROMMETS, THE STUB–OUTS AND THE OVERALL SUMP ASSEMBLY.

B. SUMP TESTING SHALL BE DONE AS FOLLOW:

1. ATTACH PROVIDED SUMP TEST ASSEMBLY ONTO THE END OF THE 3–INCH SUCTION PIPE INSIDE THE VALVE PIT WITH A 3–INCH NO–HUB OR FERNCO COUPLING AND PVC TEST CAP.
2. SECURE 1/8–INCH TUBING TO THE HIGH PORT ON A 0–50–INCH MAGNEHELIC GAUGE, AND THEN CONNECT THE OTHER END TO THE TUBING PORT ON THE PVC TEST CAP.
3. INSTALL A TEST PLUG IN THE SUMP BREATHER HOLE USING THE RUBBER SEAL PROVIDED. APPLY SILICONE SPRAY TO THE RUBBER SEAL BEFORE INSTALLATION. TURN 90 DEGREES TO MAKE A TIGHT SEAL.
4. PRESSURIZE THE COLLECTION SUMP THROUGH THE AIR CHUCK ON THE PVC TEST CAP.
5. TEST AT 40–INCH WATER GAUGE PRESSURE. LEAKAGE MUST BE UNDER 1–INCH WATER GAUGE IN ONE (1) MINUTE.
6. IF LEAK TEST FAILS THE CONTRACTOR MUST LOCATE THE LEAK, REPAIR IT AND RETEST.

VACUUM LINE TESTING – DAILY TESTING

A. A TWO (2) HOUR VACUUM TIGHTNESS TEST OF ALL SEWER MAINS AND LATERAL CONNECTIONS SHALL BE CONDUCTED DAILY AS FOLLOWS:

1. PLUG ALL OPEN CONNECTIONS WITH RUBBER STOPPERS OR TEMPORARY CAPS, FITTER TO THE PIPE BY "NO–HUB" COUPLINGS.
2. APPLY A VACUUM TO 22 INCHES Hg TO THE PIPES AND ALLOW THE PRESSURE TO STABILIZE FOR 15 MINUTES.
3. THERE SHALL BE NO LOSS IN VACUUM IN EXCESS TO 1% PER HOUR FOR A TWO HOUR TEST PERIOD.
4. THERE SHALL BE ABSOLUTELY NO WATER ALLOWED TO BE ADMITTED INTO THE PIPING NETWORK DURING THIS TEST.
5. AS PIPE IS LAID THE NEW SECTION SHALL BE TESTED IN ADDITION TO THE PREVIOUSLY LAID PIPE ON THAT MAIN.

B. IF THE CONTRACTOR SUCCESSFULLY PASSES THE DAILY TWO HOUR TEST FOR SEVEN (7) CONSECUTIVE WORKING DAYS OR TWO THOUSAND (2,000) FEET OF PIPE, A REQUEST TO MODIFY THE TEST PROCEDURES MAY BE MADE TO THE ENGINEER. IF SO APPROVED BY THE ENGINEER, THE DAILY TWO (2) HOUR VACUUM TEST PROCEDURE MAY BE MODIFIED AS FOLLOWS:

1. THE PROCEDURE MAY BE ALTERED TO ALLOW THE TRENCH TO BE COVERED AS WORK PROGRESSES RATHER THAN BEING KEPT OPEN ALL DAY AS IN THE NORM WITH TWO HOUR TEST.
2. SHOULD A LINE FAIL THE VACUUM TEST WHILE UTILIZING THIS TEST MODIFICATION, THE CONTRACTOR SHALL TAKE WHATEVER ACTION NECESSARY AT HIS OWN EXPENSE TO SUCCESSFULLY PASS THE TEST INCLUDING THE RE–EXCAVATION OF THE TRENCH, LEAK DETECTION, LINE REPAIR, AND ADDITIONAL CLEANUP AS REQUIRED BY ENGINEER.
3. AFTER A FAILURE, THE CONTRACTOR MUST RETURN TO THE STANDARD TESTING PROCEDURES IN ORDER TO "RE–QUALIFY" FOR THE MODIFIED TESTING AGAIN.

DSGN: 2 - Design by
DR: 3 - Drawn by
CHK: 4 - Checked by
APVD: 5 - Approved by

VERIFY SCALE
1"
BAR IS ONE INCH ON ORIGINAL DRAWING. ADJUST SCALES AS NECESSARY.

No.	DATE	REVISIONS	BY	APVD

FINAL SUBMITTAL

CONSULTANT

VILLAGE OF PALM SPRINGS

VILLAGE UTILITY STANDARDS UPDATED MAY 2019

SPECIFICATIONS - FLUSHING, TESTING, AND DISINFECTION

DWG NO. 19 OF 46
SHEET SPEC-15
PROJ. NO. 400-080.00
DATE JULY 2, 2019

FLUSHING, TESTING, AND DISINFECTION (CONTINUED)

4. THIS TEST MODIFICATION IS OPTIONAL, AS SUCH, THE CONTRACTOR ASSUMES ALL LIABILITY IN ITS USED, EVEN IF APPROVED BY THE ENGINEER.

VACUUM LINE TESTING – FINAL ACCEPTANCE TEST

A. A FOUR (4) HOUR VACUUM TIGHTNESS TEST OF THE COMPLETE VACUUM PIPING NETWORK, INCLUDING ALL SEWER MAINS AND LATERAL CONNECTIONS SHALL BE CONDUCTED AS FOLLOWS:

1. SUBJECT THE ENTIRE SEWAGE SYSTEM TO A VACUUM OF 22 INCHES Hg, ALLOW TO STABILIZE FOR 15 MINUTES.

2. THERE SHALL BE NO LOSS GREATER THAN 1% PER HOUR OVER A FOUR (4) HOUR TEST PERIOD.

3. THERE SHALL BE ABSOLUTELY NO WATER ALLOWED TO ENTER THE PIPING SYSTEM OR THE VACUUM STATION DURING THIS TEST.

B. CONTRACTOR TO PROVIDE 48 HOURS NOTICE TO ENGINEER PRIOR TO TEST.

C. CONTRACTOR TO ASSURE ALL DIVISION VALVES ARE OPEN PRIOR TO BEGINNING OF FINAL ACCEPTANCE TEST.

D. FINAL ACCEPTANCE TEST SHALL BE RECORDED ON APPROVED VACUUM CHART RECORDER. THIS CHART WILL NOT BE CONSIDERED VALID UNLESS WITNESSED BY ENGINEER ON TEST EQUIPMENT AT BEGINNING AND THE END OF VACUUM TEST PERIOD.

E. ENGINEER WILL SIGN AND DATE CHART TO VERIFY WITNESS OF TEST. THIS SIGNATURE DOES NOT INDICATE ACCEPTANCE OF THE SYSTEM.

VACUUM LINE FLUSHING

A. AFTER SUCCESSFUL FINAL FOUR (4) HOUR ACCEPTANCE TESTING, FLUSH LINES TO REMOVE DEBRIS AND FOREIGN MATERIALS THAT ACCUMULATED DURING CONSTRUCTION.

B. SUGGESTED PROCEDURE IN THE ABSENCE OF SPECIAL TEST APPARATUS, THIS PROCEDURE WILL REQUIRE THE USE OF VACUUM VALVES, WHICH MUST BE INSTALLED BY THE CONTRACTOR.

1. PLACE SYSTEM UNDER VACUUM.

2. ADD WATER AND AIR IN CONTROLLED AMOUNTS TO VALVE PITS AT EXTREME ENDS OF THE SYSTEM.

3. UTILIZE SYSTEM VACUUM TO TRANSPORT WATER AND DEBRIS TO COLLECTION POINT.

4. CONTINUE PROCEDURE UNTIL WATER ENTERING AT COLLECTION POINT IS FREE OF CONTAMINATION OR DEBRIS.

5. IF THE VACUUM COLLECTION TANK IS USED AS THE COLLECTION POINT, MONITOR VOLUME OF LIQUID IN TANK AND PUMP OUT AS NECESSARY.

6. USE SYSTEM SEWAGE PUMPS ONLY AFTER VERIFYING THAT NO DEBRIS IS PRESENT IN COLLECTION TANK.

7. IF DEBRIS IS PRESENT, USE OTHER METHODS TO EMPTY COLLECTION TANK.

8. AT COMPLETION OF FLUSHING, CLEAN COLLECTION TANK OF ALL COLLECTED DEBRIS.

9. SEAL SYSTEM AND MAKE READY TO PLACE INTO OPERATION.

C. ALTERNATE FLUSHING PROCEDURE SUBJECT TO ENGINEER'S REVIEW AND APPROVAL.

FINAL SYSTEM TESTING

A. AFTER ACCEPTANCE TESTING, FINAL SYSTEM TESTING SHALL BE COMPLETED TO ENSURE THAT THE SYSTEM OPERATES AT THE DESIGN CONDITIONS. FINAL SYSTEM TESTING CAN BE DONE AT THE SAME TIME AS LINE FLUSHING IF APPROVED BY THE ENGINEER

B. VACUUM PUMP STATION AND CONNECTING VACUUM MAINS FROM THE PHASE TO THE STATION MUST BE IN OPERATION PRIOR TO FINAL SYSTEM TESTING.

C. SUGGESTED PROCEDURE:

1. PLACE SYSTEM UNDER VACUUM.

2. THE DESIGN LIQUID FLOW SHALL BE USED FOR TESTING.

3. ADD WATER AT THE DESIGN LIQUID FLOW RATE EVENLY DISTRIBUTED AT THE EXTREME ENDS OF THE SYSTEM. THE VACUUM VALVE DOES NOT NEED TO BE INSTALLED TO COMPLETE THIS. WATER ADDED TO THE SYSTEM MUST BE METERED AT EACH LOCATION WHERE THE WATER IS ADDED.

4. MEASURE THE WATER AT THE VACUUM PUMP STATION TO ENSURE THAT IT IS EQUAL TO THE WATER BEING INTRODUCED INTO THE SYSTEM.

5. SEAL SYSTEM AND MAKE READY TO PLACE INTO OPERATION.

TABLE 1 – MINIMUM TIME REQUIRED FOR A 1.0 PSI PRESSURE DROP

PIPE DIAM.	MIN TIME	LENGTH FOR MIN TIME	TIME FOR LONGER LENGTHS	SPECIFICATION TIME FOR LENGTH (L) SHOWN (MIN:S)							
(IN)	(MIN:S)	(FT)	(S)	100 FT	150 FT	200 FT	250 FT	300 FT	350 FT	400 FT	450 FT
4	3:36	597	0.380L	3:46	3:46	3:46	3:46	3:46	3:46	3:46	3:46
6	5:40	398	0.854L	5:40	5:40	5:40	5:40	5:40	5:42	5:42	6:24
8	7:34	298	1.520L	7:34	7:34	7:34	7:34	7:36	10:08	10:08	11:24
10	9:26	239	2.374L	9:26	9:26	9:26	9:53	11:52	13:51	15:49	17:48
12	11:20	199	3.418L	11:20	11:20	11:24	14:15	17:05	19:56	22:47	25:38
15	14:10	159	5.234L	14:10	14:10	17:48	22:15	26:42	31:09	35:36	40:04
18	17:00	133	7.692L	17:00	19:13	25:38	32:03	38:27	44:52	51:16	57:41
21	19:50	114	10.470L	19:50	26:10	35:54	43:37	52:21	61:00	69:48	78:31
24	22:40	99	13.674L	22:47	34:11	45:34	56:58	68:22	79:46	91:10	102:33
27	25:30	88	17.306L	28:51	43:16	57:41	72:07	86:32	100:57	115:22	129:48
30	28:20	80	21.366L	35:37	53:25	71:13	89:02	106:50	124:38	142:26	160:15
33	31:10	72	25.852L	43:05	64:38	86:10	17:43	129:16	150:43	172:21	193:53
36	34:00	66	30.768L	51:17	76:55	102:34	128:12	153:50	179:29	205:07	230:46

DSGN: 2 - Design by
DR: 3 - Drawn by
CHK: 4 - Checked by
APVD: 5 - Approved by

VERIFY SCALE
1"
BAR IS ONE INCH ON ORIGINAL DRAWING. ADJUST SCALES AS NECESSARY.

No.	DATE	REVISIONS	BY	APVD
		FINAL SUBMITTAL		

CONSULTANT

VILLAGE OF PALM SPRINGS

VILLAGE UTILITY STANDARDS UPDATED MAY 2019

SPECIFICATIONS - FLUSHING, TESTING, AND DISINFECTION

DWG NO. 20 OF 46
SHEET SPEC-16
PROJ. NO. 400-080.00
DATE JULY 2, 2019

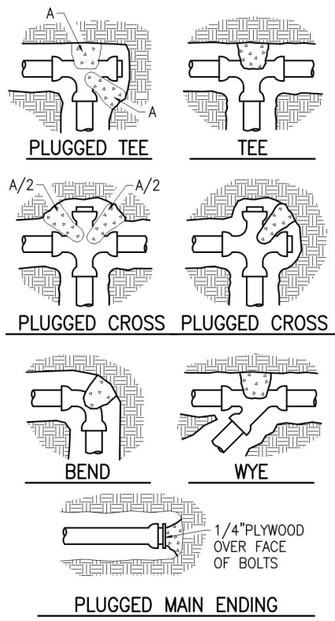

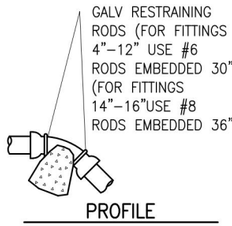

VOLUME OF THRUST BLOCKS FOR VERTICAL BENDS IN CUBIC YARDS			
FITTING SIZE	BENDS		
	11-1/4°	22-1/2°	45°
4"	0.2	0.4	1.1
6"	0.4	1.0	2.7
8"	0.6	1.5	4.0
10"	0.9	2.3	6.0
12"	1.3	3.2	8.5
14"	1.8	4.3	11.5
16"	2.3	5.6	14.8

BEARING AREA OF THRUST BLOCKS IN SQ.FT. (HORIZONTAL FITTINGS)							
FITTING SIZE	BENDS			TEE,WYE PLUG,OR CAP	TEE (PLUGGED RUN		90 BEND OR PLUGGED CROSS
	11-1/4°	22-1/2°	45°		A1	A2	
4"			1.0	1.0	1.9	1.4	1.4
6"		1.0	1.6	2.1	4.3	3.0	3.0
8"	1.0	1.5	2.9	3.8	7.6	5.4	5.3
10"	1.2	2.4	4.6	5.9	11.8	8.4	8.4
12"	1.7	3.4	6.6	8.5	17.0	12.0	12.0
14"	2.3	4.6	8.9	11.5	23.0	16.3	16.3
16"	3.0	6.0	11.6	15.0	30.0	21.3	21.3
18"	3.8	7.6	14.6	19.0	38.0	27.0	27.0
20"	4.7	9.4	18.1	23.5	47.0	33.3	33.3
24"	6.8	13.6	26.2	34.0	68.0	48.0	48.0

THRUST BLOCK NOTES

1) MECHANICAL RESTRAINS ONLY SHALL BE USED AT THE FITTINGS AND VALVES. THRUST BLOCKS SHALL ONLY BE USED IN RARE CASES WHERE MECHANICAL RESTRAINS ARE NOT PRACTICAL WITH APPROVAL FROM THE VILLAGE.
2) REQUIRED VOLUMES OR BEARING AREAS INDICATED AT FITTINGS ARE BASED UPON TEST PRESSURES OF 150 PSIG, 2,000 LBS/SF ALLOWABLE SOIL BEARING STRESS AND THE WEIGHT OF CONCRETE EQUAL TO 4050 LBS/CY.
3) BEARING AREAS OF THRUST BLOCKS SHALL NOT BE LESS THAN 1.0 SF.
4) KEEP CONCRETE CLEAR OF JOINT AND JOINT ACCESSORIES AND WRAP THE FITTING WITH VISQUEEN PRIOR TO PLACING CONCRETE.
5) BEARING AREAS, VOLUMES, AND SPECIAL BLOCKING DETAILS SHOWN ON DRAWINGS SHALL TAKE PRECEDENCE OVER THIS STANDARD.
6) THRUST BLOCKS FOR VERTICAL BENDS HAVING DOWNWARD RESULTANT THRUSTS SHALL BE THE SAME AS HORIZONTAL BENDS.
7) COMPUTE BEARING AREAS FOR HORIZONTAL BEND THRUST BLOCKS AT DIFFERENT TEST PRESSURES AND SOIL BEARING STRESSES WITH THE FOLLOWING EQUATION:
   BEARING AREA = (REQUIRED TEST PRESSURE/150 X (2,000/ACTUAL SOIL BEARING STRESS) X (TABLE VALUE)
8) COMPUTE VOLUMES OF CONCRETE FOR VERTICAL BENDS HAVING UPWARD RESULTANT THRUSTS AT DIFFERENT TEST PRESSURES WITH THE FOLLOWING EQUATION:
   VOLUME = (REQUIRED TEST PRESSURE/150) X (TABLE VALUE)

(THRUST BLOCKS ALLOWED AT LOCATIONS SHOWN ON DRAWINGS ONLY)

THRUST BLOCK NOTES AND DETAILS

WM01

NOTES:
1) ALL PIPE AND FITTINGS UP TO THE D.C.D.A. SHALL BE DUCTILE IRON CEMENT LINED.
2) THE INITIAL TEST OF THE BACKFLOW PREVENTION ASSEMBLY SHALL BE PERFORMED BY A CERTIFIED BACKFLOW TECHNICIAN. THE SUCCESSFUL TEST REPORT SHALL BE PROVIDED TO THE VILLAGE PRIOR TO THE FIRE LINE BEING PLACED INTO SERVICE.
3) THE DOUBLE CHECK DETECTOR ASSEMBLY SHALL BE APPROVED BY THE UNIVERSITY OF SOUTHERN CALIFORNIA (U.S.C.) OR THE A.S.S.E. (WITH ONE YEAR FIELD TESTING).
4) WHEN FIRE LINE LENGTH IS OVER ONE PIPE LENGTH, LINE SHALL BE TERMINATED WITH A GATE VALVE (=POINT OF SERVICE). NO PIPE JOINTS / CONNECTIONS ARE PERMITTED BETWEEN POINT OF SERVICE AND VERTICAL 90° BEND.
5) THE DESIGN SHALL MINIMIZE ANY POTENTIAL FOR WATER MAIN WITH NO FLOW. A FIRE HYDRANT LOCATED NEAR THE DOUBLE CHECK DETECTOR ASSEMBLY MAY BE REQUIRED FOR LONG, DEAD ENDING DEDICATED FIRE LINES.
6) AN APPROVED REDUCED PRESSURE PRINCIPLE DETECTOR ASSEMBLY SHALL BE REQUIRED FOR ALL FIRE SYSTEMS WITH STORAGE TANKS AND/OR AUXILIARY WATER SUPPLY.
7) TAMPER SWITCHES MAY BE REQUIRED BY THE FIRE MARSHALL.
8) PIPE MATERIAL ON THE CUSTOMER SIDE OF POINT OF SERVICE SHALL COMPLY WITH FIRE MARSHALL REQUIREMENTS.
9) 3' WIDE 6" THICK CONCRETE SLAB IS RECOMMENDED FOR ASSEMBLY SMALLER THAN 4".

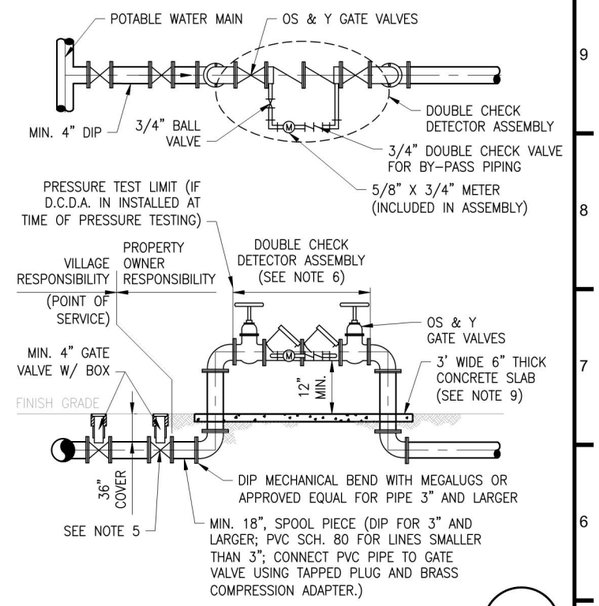

DOUBLE CHECK DETECTOR ASSEMBLY

WM02

		MIN LENGTH TO BE RESTRAINED (FT) PER PIPE DIA.				
FITTING TYPE		4"	6"	8"	10"	12"
90° HORIZ. BEND		15	21	27	32	37
45° HORIZ. BEND		6	9	11	13	15
22-1/2° HORIZ. BEND		3	4	5	6	7
11-1/4° HORIZ. BEND		1	2	3	3	4
45° VERT. OFFSET	UPPER BEND	13	18	24	28	33
	LOWER BEND	7	6	7	9	10
22-1/2° VERT. OFFSET	UPPER BEND	6	9	11	14	16
	LOWER BEND	4	3	3	4	5
PLUG (DEAD END)		31	44	57	69	81
VALVE		31	44	57	69	81
4" x Ø" TEE	RUN	5	–	–	–	–
	BRANCH	9	–	–	–	–
6" x Ø" TEE	RUN	5	5	–	–	–
	BRANCH	1	21	–	–	–
8" x Ø" TEE	RUN	5	5	5	–	–
	BRANCH	1	14	34	–	–
10" x Ø" TEE	RUN	5	5	5	5	–
	BRANCH	1	5	28	45	–
12" x Ø" TEE	RUN	5	5	5	5	5
	BRANCH	1	1	21	40	57
6" x Ø" REDUCER	LARGE SIDE	23	–	–	–	–
8" x Ø" REDUCER	LARGE SIDE	41	24	–	–	–
10" x Ø" REDUCER	LARGE SIDE	56	42	23	–	–
12" x Ø" REDUCER	LARGE SIDE	70	59	43	40	–

NOTES

1) RESTRAINT INFORMATION FOR DUCTILE IRON PIPE INSTALLATION.
2) MINIMUM LENGTH TO BE RESTRAINED BASED ON MINIMUM 2'–6" OF COVER, MAXIMUM TEST PRESSURE OF 150 PSI, AND A SAFETY FACTOR OF 2. NOTIFY ENGINEER OF ANY DISCREPANCY THAT REQUIRES CLARIFICATION.
3) MINIMUM NUMBER OF JOINTS TO BE RESTRAINED SHALL BE ALL JOINTS WITHIN MINIMUM LENGTH GIVEN BY TABLE.
4) MINIMUM LENGTH TO BE RESTRAINED IS MEASURED IN FEET FROM FITTING OR VALVE.
5) ALL JOINTS BETWEEN UPPER AND LOWER OFFSET BENDS SHALL BE RESTRAINED.
6) ALL JOINTS BETWEEN LOWER BENDS OF CONFLICT CROSSINGS SHALL BE RESTRAINED.
7) RESTRAINED LENGTHS FOR REDUCERS ARE ON LARGE DIAMETER SIDE.
8) RUN RESTRAINT FOR TEES IS UPSTREAM AND DOWNSTREAM.
9) RESTRAINT LENGTHS FOR VALVES ARE REQUIRED UPSTREAM AND DOWNSTREAM.
10) NOTIFY THE ENGINEER IF ATTACHED LENGTH OF PIPE IN EACH DIRECTION ALONG THE RUN OF THE TEE IS SIGNIFICANTLY GREATER THAN 5.0' (LENGTH SHALL NOT BE LESS THAN 5.0'). THE MINIMUM LENGTH OF A BRANCH OF A TEE TO BE RESTRAINED AS SHOWN IN THE ABOVE TABLE IS CALCULATED ASSUMING THE LENGTH OF ATTACHED PIPE ALONG THE RUN OF TEE IN EACH DIRECTION IS 5.0'.
11) JOINT RESTRAINTS SHALL BE AS SPECIFIED.
12) COMPUTE LENGTHS TO BE RESTRAINED AT TEST PRESSURES OTHER THAN 150PSI WITH THE FOLLOWING EQUATION:
    LENGTH = (REQUIRED TEST PRESSURE/150) X (TABLE VALUE)
13) IF DEPTH OF COVER IS LESS THAN 2'–6" RESTRAIN ALL JOINTS PER SPECIFICATIONS.

DUCTILE IRON THRUST RESTRAINT TABLE

WM03

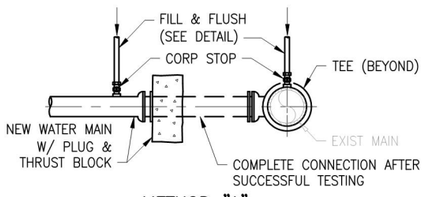

METHOD "A"

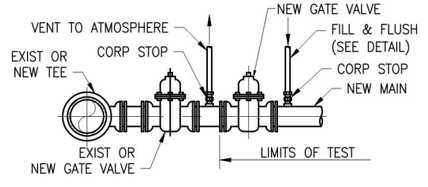

METHOD "B"

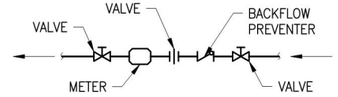

FLUSH / FILL LINE DETAIL

NOTES:
1) REMOVE TEMPORARY CONNECTION AT CORP STOP ON EXIST MAIN AFTER FILLING & FLUSHING NEW LINE.
2) DO NOT REMOVE TEMPORARY CONNECTION AT CORP STOP ON NEW MAIN UNTIL ALL TESTS ARE COMPLETE.
3) METHOD "B" IS PREFERRED METHOD AND WILL BE REQUIRED FOR ALL CONNECTIONS UNLESS EXISTING CONDITIONS DICTATE OTHERWISE.
4) PROVIDE ALL NECESSARY THRUST BLOCKS OR RESTRAINTS.
5) COMPLY WITH PERMIT REQUIREMENTS.

FILL & FLUSH CONNECTIONS

WM04

NOTES:
1) TOP OF BRASS MARKER MUST BE FLUSH WITH SURROUNDING SURFACE AND NOT CREATE A 1/8" TRIPPING HAZARD.
2) FLOW STREAM I.D.'S:
   WM = WATER MAIN
   FM = FORCE MAIN

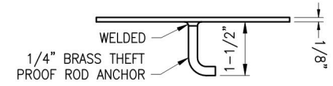

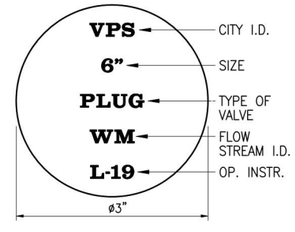

VALVE MARKER

WM05

DSGN: 2 - Design by	VERIFY SCALE			FINAL SUBMITTAL			CONSULTANT	VILLAGE OF PALM SPRINGS	DWG NO. 21 / SHEET WM-01
DR: 3 - Drawn by	1"							VILLAGE UTILITY STANDARDS UPDATED MAY 2019	STANDARD DETAILS - WATER DISTRIBUTION
CHK: 4 - Checked by	BAR IS ONE INCH ON ORIGINAL DRAWING. ADJUST SCALES AS NECESSARY.	No.	DATE	REVISIONS	BY	APVD			OF 46 / PROJ. NO. 400-080.00
APVD: 5 - Approved by									DATE JULY 2, 2019

File name: C:\Civil 3D Projects\400-080.01_Village Utility Standards Update - 2018\01_Working\400-080.01_Water Distribution Details.dwg; Plotted @: 8/23/2019 2:01:41 PM; Scale multiplier: 0.5; Printed by: Ricardo Paez; Milestone: FINAL SUBMITTAL

FINAL SUBMITTAL

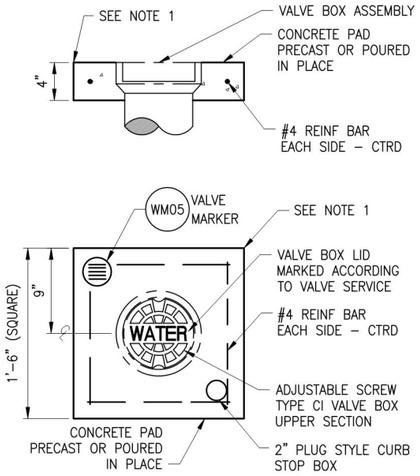

NOTES:
1. UTILIZE 3/8" RADIUS TOOLED EDGES IF PAD IS LOCATED IN UNPAVED AREAS.

CONCRETE VALVE BOX PAD

WM06

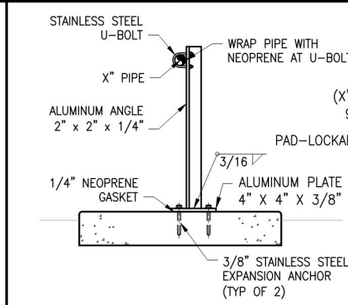

DETAIL 1

SCALE: NTS

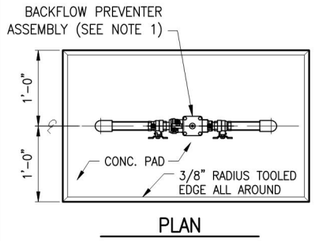

PLAN

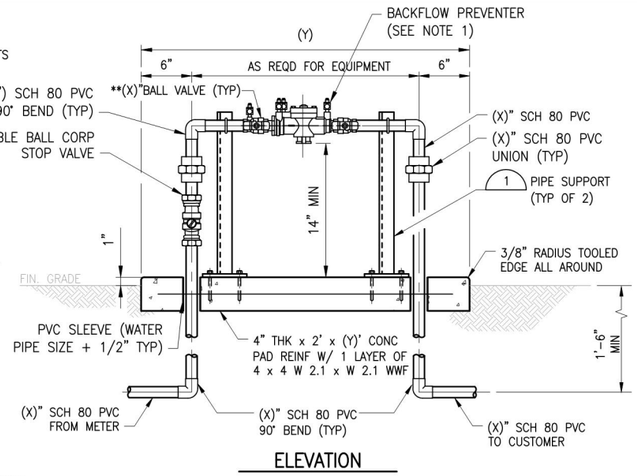

ELEVATION

NOTES:
1. BACKFLOW PREVENTER SHALL BE RPZ TYPE AS SPECIFICED AND USC APPROVED.
2. ** PROVIDED BY BACKFLOW MANUFACTURER.
3. (X)" = SERVICE SIZE 1" THROUGH 2".
4. EXPOSED PVC PIPE SHALL BE PAINTED PER STANDARD SPECIFICATIONS.
5. CONTRACTOR TO SECURE PLUMBING PERMIT WITH THE LOCAL BUILDING DEPARTMENT.

BACKFLOW PREVENTER 1" – 2"(R.P.Z. TYPE)

WM07

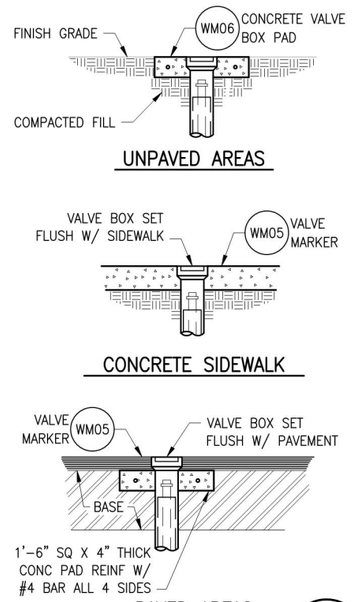

VALVE BOX SETTINGS

WM08

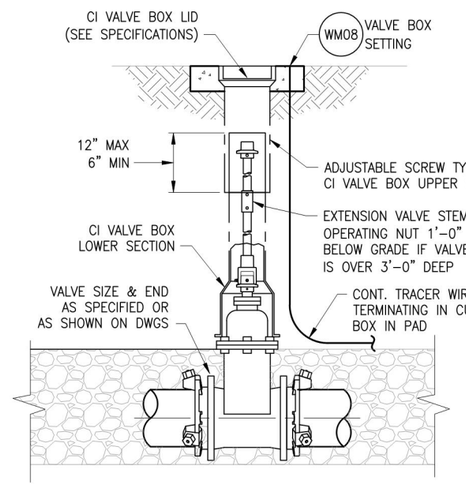

GATE VALVE SETTING

WM09

NOTES

1) WHERE POSSIBLE AND MINIMUM COVER CAN BE MAINTAINED, WATER MAIN SHALL CROSS OVER CONFLICT UTILITY AS PER STANDARD SEPARATION STATEMENT.

2) MINIMUM CLEARANCES SHALL BE AS FOLLOWS :

EXISTING UTILITY	MINIMUM CLEARANCE
SANITARY SEWER OR FORCE MAIN	18"
STORM SEWER	18"
OTHER UTILITIES	6"

3) ALL JOINTS OF CROSSING SHALL BE RESTRAINED INCLUDING ALL PIPE JOINTS UPSTREAM AND DOWNSTREAM OF UPPER BENDS AS PER DETAIL WM03

4) PIPE JOINTS MAY BE DEFLECTED AS AN ALTERNATIVE TO FITTINGS AT CONTRACTORS DISCRETION. DO NOT EXCEED PIPE MANUFACTURERS SPECIFIED MAXIMUM DEFLECTION.

5) DETAIL MAY BE MODIFIED IN FIELD WHERE TWO (2) OR MORE UTILITY CONFLICTS ARE IN CLOSE PROXIMITY WITH EACH OTHER. COORDINATE IN FIELD WITH RESIDENT PROJECT REPRESENTATIVE.

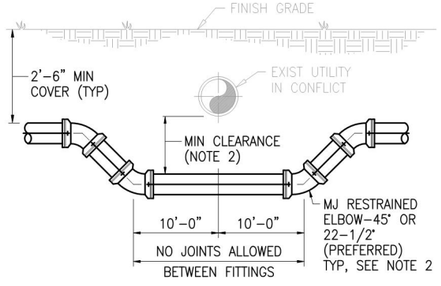

UTILITY CROSSING

WM10

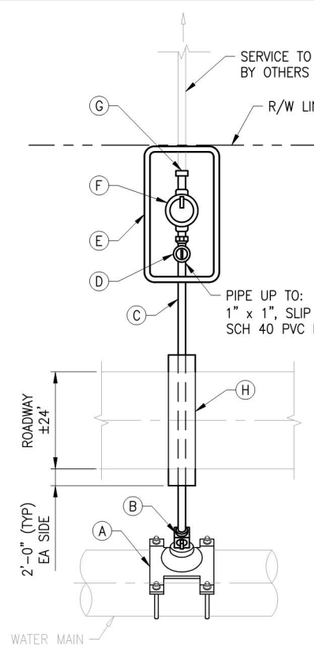

LEGEND

(A) MAIN X 1" CC TAP DOUBLE BALE SERVICE SADDLE, SMITH BLAIR 313
(B) 1" CORPORATION STOP, FORD F1000–4–Q–NL
(C) 1" AWWA C901, SDR9, PE 4710, BLUE POLY PIPE, 250 PSI
(D) KEYED METER STOP 5/8" CTS COMPRESSION X 5/8", FORD BA43–242W
(E) NDS SINGLE 12" STANDARD BOX, #D1200 B/O W/ SINGLE PLASTIC LID AND CAST IRON READER # D1200
(F) 5/8" MASTER METER (PROVIDED/INSTALLED BY VILLAGE)
(G) 5/8" x 3/4" METER TAIL AND 3/4" SCH 40 PVC FEMALE ADAPTER. (PROVIDED/INSTALLED BY VILLAGE)
(H) 3" SCH 40 PVC CASING, PVC CASING REQ FOR ALL SERVICES INSTALLED IN PAVED AREAS. MINIMUM LENGTH OF CASING SHALL BE WIDTH OF PAVEMENT + 2' ON EACH END.

NOTES:
1) LOCATION OF WATER SERVICES SHALL BE DETERMINED IN THE FIELD BY OWNER OR RESIDENT PROJECT REPRESENTATIVE.
2) SUCCESSIVE TAPS INTO THE WATER MAIN SHALL BE 18" CENTERS (MIN).
3) MINIMUM COVER FOR SERVICE LINES SHALL BE 2'–0".
4) ALL BRASS COMPONENTS THAT COME IN CONTACT WITH POTABLE WATER SHALL MEET NSF/ANSI STANDARD 61, ANNEX G AND/OR NSF/ANSI STANDARD 372 AS APPLICABLE. BRASS ALLOY SHALL NOT CONTAIN MORE THAN 0.25% LEAD BY WEIGHT.
5) WATER SERVICE ARE NOT TO BE INSTALLED UNDER DRIVEWAYS OR SIDEWALKS.

TYPICAL SINGLE WATER SERVICE

WM11

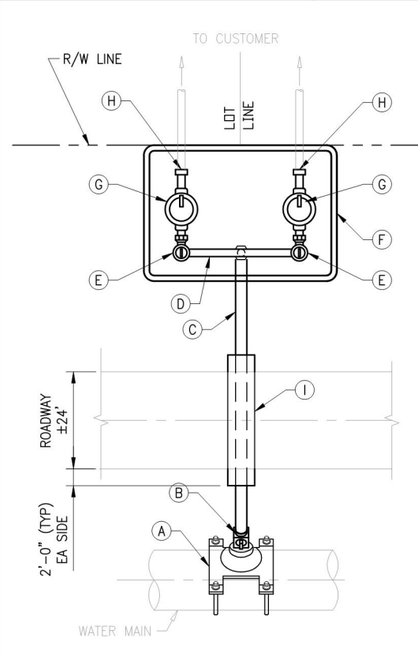

LEGEND

(A) MAIN X 1" CC TAP DOUBLE BALE SERVICE SADDLE, SMITH BLAIR 313
(B) 1" CORPORATION STOP, FORD F1000–4–Q–NL
(C) 1" AWWA C901, SDR9, PE 4710, BLUE POLY PIPE, 250 PSI
(D) 1" U–BRANCH CONNECTOR CTS COMPRESSION INLET MNPT OUTLET, FORD U48–43–NL
(E) 5/8" x 3/4" ANGLE CORP STOP, FORD #AV–13–332W–NL
(F) CARSON DUAL 12" BODY PLASTIC 012–12, BLACK W/ CARSON FLUSH COVER DUAL LID CAST IRON READER #012–6
(G) 5/8" MASTER METER (PROVIDED/INSTALLED BY VILLAGE)
(H) 5/8" x 3/4" METER TAIL AND 3/4" SCH 40 PVC FEMALE ADAPTER. (PROVIDED/INSTALLED BY VILLAGE)
(I) 3" SCH 40 PVC CASING, PVC CASING REQ FOR ALL SERVICES INSTALLED IN PAVED AREAS. MINIMUM LENGTH OF CASING SHALL BE WIDTH OF PAVEMENT + 2' ON EACH END.

NOTES:
1) LOCATION OF WATER SERVICES SHALL BE DETERMINED IN THE FIELD BY OWNER OR RESIDENT PROJECT REPRESENTATIVE.
2) SUCCESSIVE TAPS INTO THE WATER MAIN SHALL BE 18" CENTERS (MIN).
3) MINIMUM COVER FOR SERVICE LINES SHALL BE 2'–0".
4) ALL BRASS COMPONENTS THAT COME IN CONTACT WITH POTABLE WATER SHALL MEET NSF/ANSI STANDARD 61, ANNEX G AND/OR NSF/ANSI STANDARD 372 AS APPLICABLE. BRASS ALLOY SHALL NOT CONTAIN MORE THAN 0.25% LEAD BY WEIGHT.
5) WATER SERVICE ARE NOT TO BE INSTALLED UNDER DRIVEWAYS OR SIDEWALKS.

TYPICAL DOUBLE WATER SERVICE

WM12

DSGN: 2 - Design by	VERIFY SCALE							
DR: 3 - Drawn by								
CHK: 4 - Checked by	1"			FINAL SUBMITTAL				
APVD: 5 - Approved by	BAR IS ONE INCH ON ORIGINAL DRAWING. ADJUST SCALES AS NECESSARY.	No.	DATE	REVISIONS	BY	APVD	CONSULTANT	

VILLAGE OF PALM SPRINGS

VILLAGE UTILITY STANDARDS UPDATED MAY 2019

STANDARD DETAILS - WATER DISTRIBUTION

DWG NO.	SHEET
22	WM-02
OF	PROJ. NO.
46	400-080.00
DATE	
JULY 2, 2019	

File name: C:\Civil 3D Projects\400-080.01_Village Utility Standards Update - 2018\01_Working\400-080.01_Water Distribution Details.dwg; Plotted @: 8/23/2019 2:01:44 PM; Scale multiplier: 0.5; Printed by: Ricardo Paez; Milestone: FINAL SUBMITTAL

FINAL SUBMITTAL

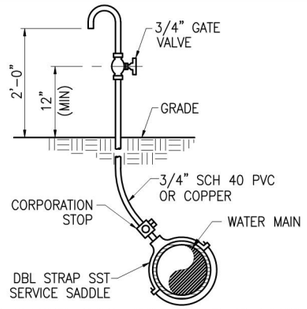

TEMPORARY SAMPLE POINT

WM13

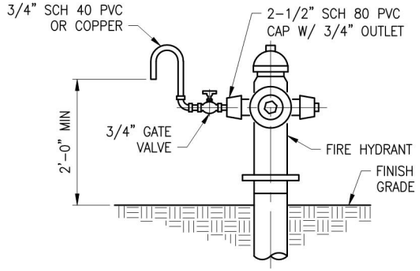

SAMPLE POINT (FIRE HYDRANT)

WM14

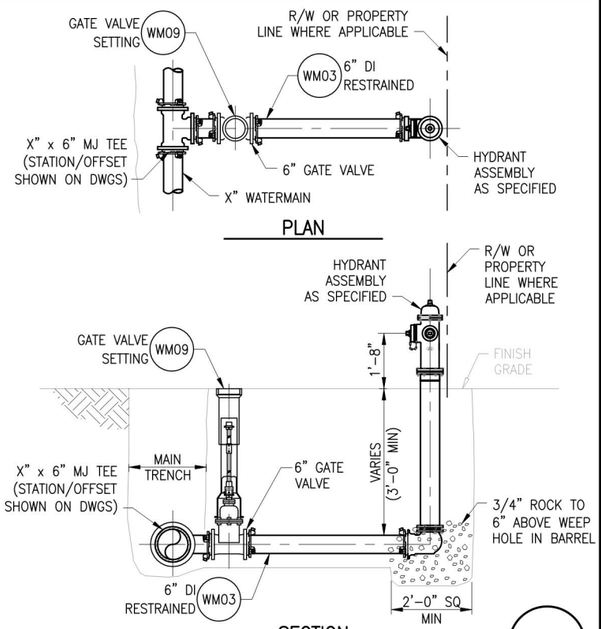

FIRE HYDRANT (STANDARD)

WM15

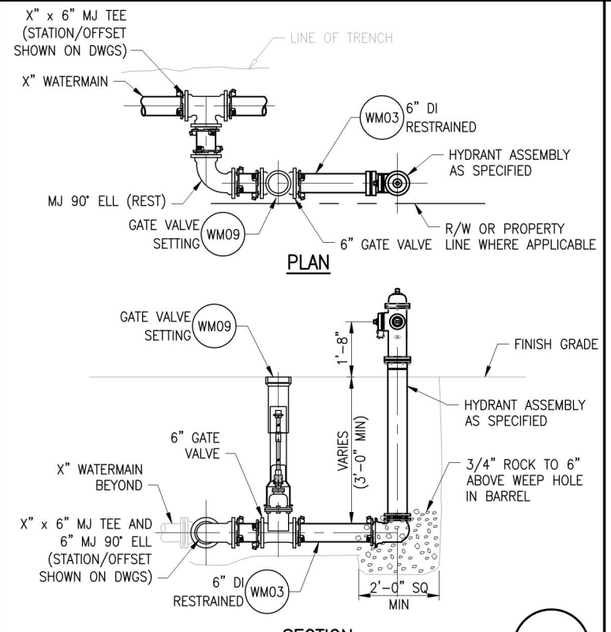

FIRE HYDRANT (PARALLEL)

WM16

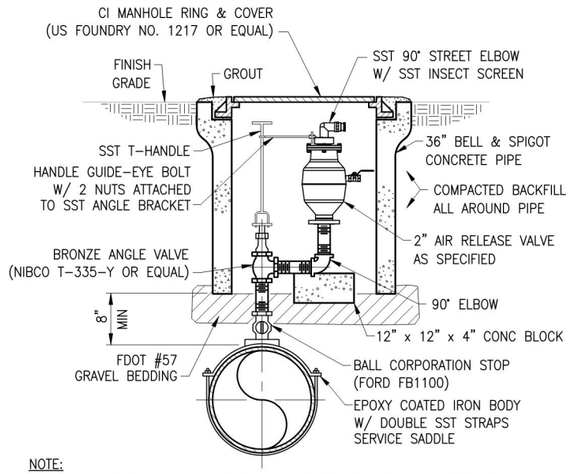

NOTE:

1) CORP STOP, ANGLE VALVE, PIPING AND ETC TO MATCH AIR RELEASE VALVE DIAMETER. WHERE HEIGHT IS AN ISSUE UTILIZE H-TEC UNIVERSAL PIPE SADDLE MODEL 391.
2) ALL CONNECTING PIPING AND FITTINGS SHALL BE SCH 40S 304 SST.
3) ARV SHALL BE H-TEC MODEL 986 OR EQUAL.

AUTOMATIC AIR RELIEF (MOUNT ABOVE PIPE)

WM17

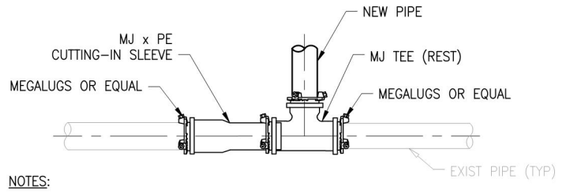

NOTES:

1) MEGALUGS OR EQUAL ARE REQUIRED THROUGHOUT THE ASSEMBLY.

CUT-IN CONNECTION (DUCTILE IRON MJ </= 12")

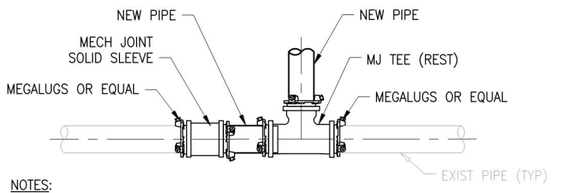

NOTES:

1) MEGALUGS OR EQUAL ARE REQUIRED THROUGHOUT THE ASSEMBLY.

CUT-IN CONNECTION (DUCTILE IRON MJ > 14")

CUT-IN CONNECTION

WM18

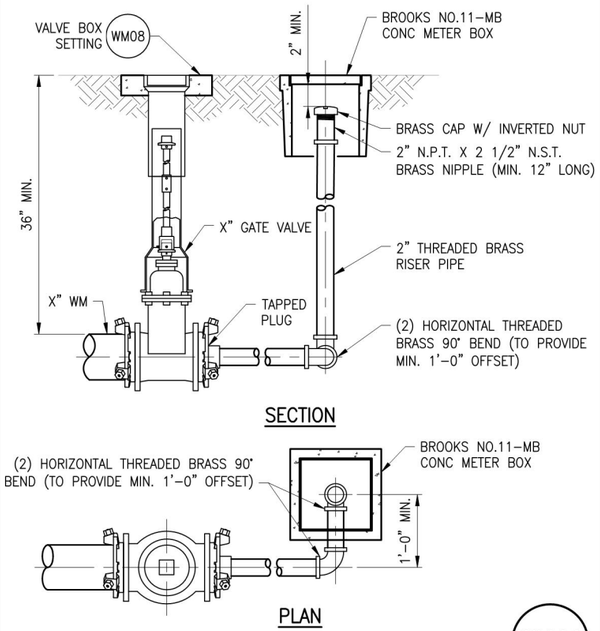

2" TERMINAL BLOWOFF

WM19

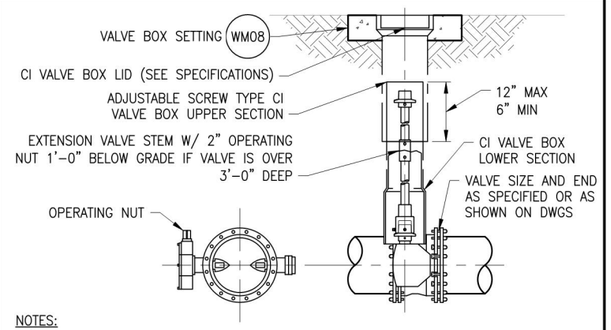

NOTES:

1) CONCRETE COLLAR IS NOT REQUIRED IN PAVED AREAS IF PAVEMENT SURFACE IS FINISHED PRIOR TO CONDITIONAL FINAL INSPECTION.
2) WHEN TOP OF OPERATING NUT IS DEEPER THAN 42" AN EXTENSION WILL BE REQUIRED TO BRING OPERATING NUT 24"-30" BELOW FINISHED GRADE. EXTENSION BOLTS & NUTS ARE TO BE STAINLESS STEEL. A HIGH STRENGTH STEEL CENTERING PLATE, WELDED TO THE EXTENSION, IS ALSO REQUIRED.
3) VALVE BOXES SHALL HAVE COVERS MARKED "WATER".
4) A CUT-IN INSTALLATION SHALL REQUIRE MEGALUGS OR EQUAL THROUGHOUT ASSEMBLY.
5) EXTENSION VALVE BOX TO BE D.I.P. OR C-900 PVC DR 18 (COLOR: BLUE).
6) VALVES IN ROADWAYS SHALL BE LOCATED OUTSIDE OF WHEEL PATHS WHENEVER POSSIBLE.

POTABLE WATER MAIN TYPICAL BUTTERFLY VALVE SETTING

WM20

	DSGN: 2 - Design by	VERIFY SCALE 1"			FINAL SUBMITTAL			CONSULTANT	**VILLAGE OF PALM SPRINGS** VILLAGE UTILITY STANDARDS UPDATED MAY 2019	STANDARD DETAILS - WATER DISTRIBUTION	DWG NO. 23 / SHEET WM-03
	DR: 3 - Drawn by										OF 46 / PROJ. NO. 400-080.00
	CHK: 4 - Checked by	BAR IS ONE INCH ON ORIGINAL DRAWING. ADJUST SCALES AS NECESSARY.	No.	DATE	REVISIONS	BY	APVD				DATE JULY 2, 2019
	APVD: 5 - Approved by										

File name: C:\Civil 3D Projects\400-080.01_Village Utility Standards Update - 2018\01_Working\400-080.01_Water Distribution Details.dwg; Plotted @: 8/23/2019 2:01:47 PM; Scale multiplier: 0.5; Printed by: Ricardo Paez; Milestone: FINAL SUBMITTAL

FINAL SUBMITTAL

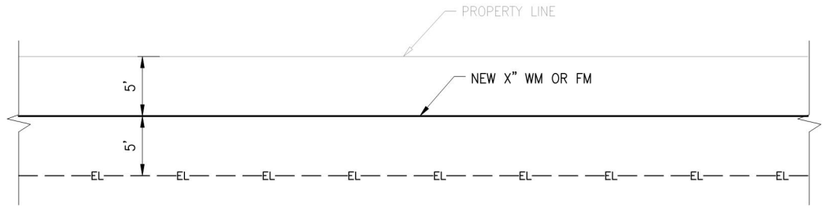

WATER MAINS OR FORCEMAINS

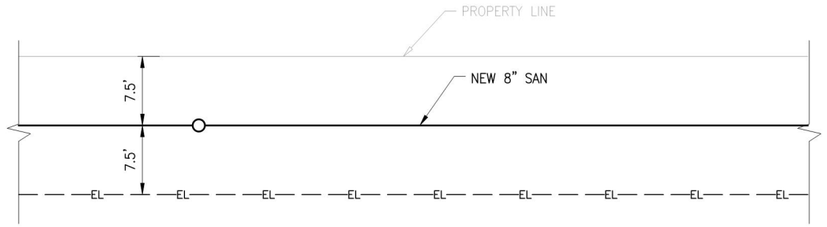

GRAVITY SEWER LINES <8' DEEP

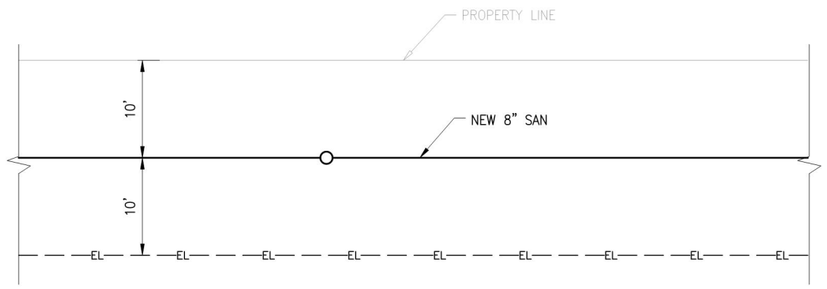

GRAVITY SEWER LINES >8' DEEP

WM21

GENERAL EASEMENT PARAMETERS

DSGN: 2 - Design by DR: 3 - Drawn by CHK: 4 - Checked by APVD: 5 - Approved by	VERIFY SCALE 1" BAR IS ONE INCH ON ORIGINAL DRAWING. ADJUST SCALES AS NECESSARY.	No.	DATE	FINAL SUBMITTAL REVISIONS	BY	APVD	CONSULTANT		**VILLAGE OF PALM SPRINGS** VILLAGE UTILITY STANDARDS UPDATED MAY 2019	STANDARD DETAILS - WATER DISTRIBUTION	DWG NO. 24 OF 46 SHEET WM-04 PROJ. NO. 400-080.00 DATE JULY 2, 2019

File name: C:\Civil 3D Projects\400-080.01_Village Utility Standards Update - 2018\01_Working\400-080.01_Water Distribution Details.dwg; Plotted @: 8/23/2019 2:01:48 PM; Scale multiplier: 0.5; Printed by: Ricardo Paez; Milestone: FINAL SUBMITTAL

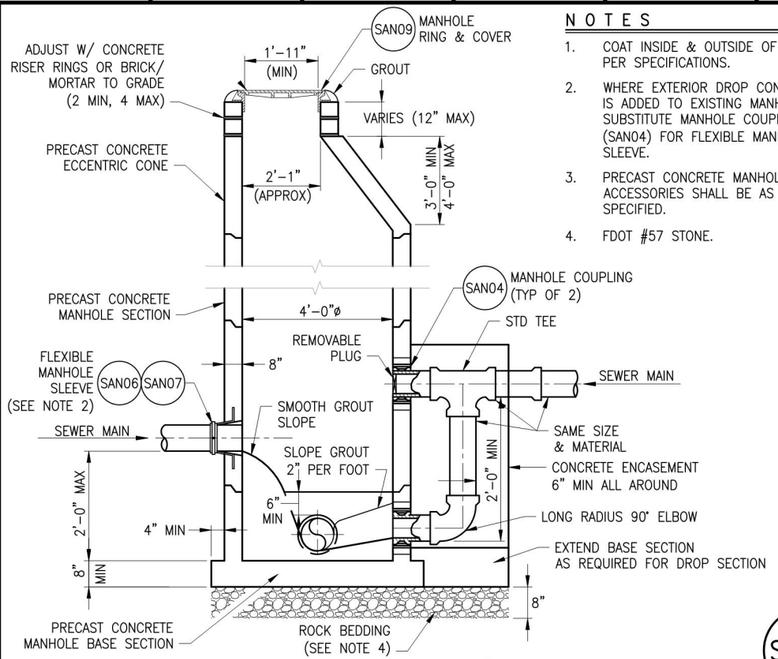

SAN01

SANITARY SEWER MANHOLE W/ EXTERIOR DROP

NOTES

1. COAT INSIDE & OUTSIDE OF MANHOLE PER SPECIFICATIONS.
2. WHERE EXTERIOR DROP CONNECTION IS ADDED TO EXISTING MANHOLE SUBSTITUTE MANHOLE COUPLING (SAN04) FOR FLEXIBLE MANHOLE SLEEVE.
3. PRECAST CONCRETE MANHOLES AND ACCESSORIES SHALL BE AS SPECIFIED.
4. FDOT #57 STONE.

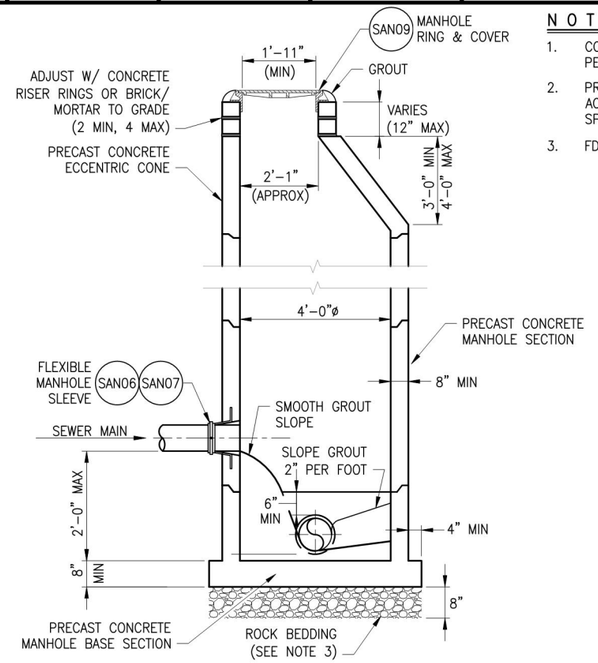

SAN02

SANITARY SEWER MANHOLE DEPTH > 6-FT

NOTES

1. COAT INSIDE & OUTSIDE OF MANHOLE PER SPECIFICATIONS.
2. PRECAST CONCRETE MANHOLES AND ACCESSORIES SHALL BE AS SPECIFIED.
3. FDOT #57 STONE.

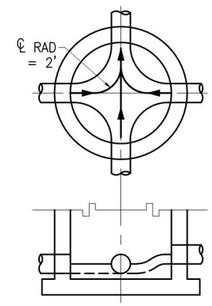

NOTES:

1) ALL INVERT CHANNELS ARE TO BE CONSTRUCTED FOR SMOOTH CHANNEL FLOW WITHOUT OBSTRUCTION OR TURBULENCE. FORM INVERT USING PVC LONG RADIUS ELBOW PIPE.
2) PROPERLY SHAPED SPILLWAYS SHALL BE CONSTRUCTED BETWEEN PIPES WITH DIFFERENT INVERT ELEVATIONS TO PROVIDE FOR SMOOTH FLOWS.
3) SERVICE LATERALS SHALL NOT ENTER MANHOLES.
4) BRICK IS PERMITTED AS FLOW CHANNEL BUILDUP.

SAN05

MANHOLE INVERT FLOW CHANNELS

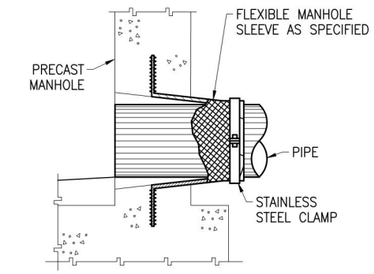

SAN06

FLEXIBLE MANHOLE COUPLING

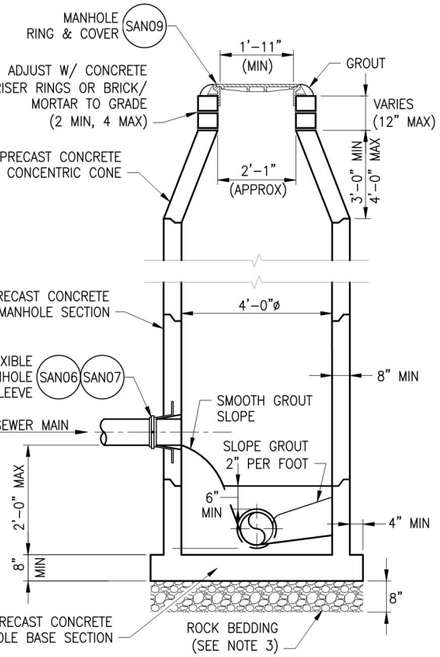

SAN03

SANITARY SEWER MANHOLE DEPTH </= 6-FT

NOTES

1. COAT INSIDE & OUTSIDE OF MANHOLE PER SPECIFICATIONS.
2. PRECAST CONCRETE MANHOLES AND ACCESSORIES SHALL BE AS SPECIFIED.
3. FDOT #57 STONE.

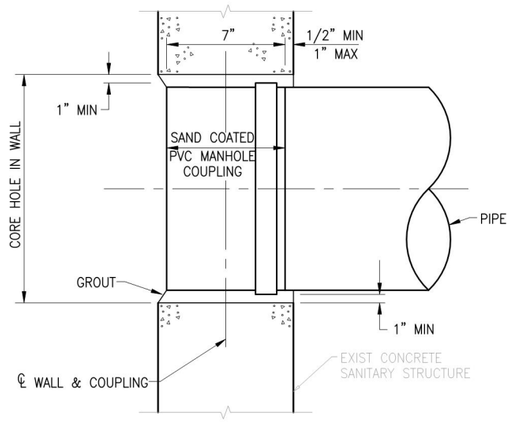

NOTES:

1) THIS DETAIL SHALL BE USED FOR CONNECTIONS TO EXISTING MANHOLES AND DROP CONNECTIONS.

SAN04

MANHOLE COUPLING

NOTES

1) CONNECTOR SHALL MEET ASTM STANDARDS D1784, D2241, D2321 AND D3034.
2) MINIMUM SDR 35

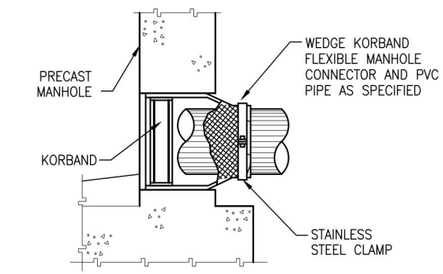

SAN07

WEDGE KORBAND ALTERNATE FLEXIBLE MANHOLE CONNECTOR

DSGN: 2 - Design by DR: 3 - Drawn by CHK: 4 - Checked by APVD: 5 - Approved by	VERIFY SCALE 1" BAR IS ONE INCH ON ORIGINAL DRAWING. ADJUST SCALES AS NECESSARY.	No.	DATE	FINAL SUBMITTAL REVISIONS	BY	APVD	CONSULTANT	**VILLAGE OF PALM SPRINGS** VILLAGE UTILITY STANDARDS UPDATED MAY 2019	STANDARD DETAILS - WASTEWASTER COLLECTION	DWG NO. 25 / SHEET SAN-01 OF 46 / PROJ. NO. 400-080.00 DATE JULY 2, 2019

File name: C:\Civil 3D Projects\400-080.01_Village Utility Standards Update - 2018\01_Working\400-080.01_Waste Water Collection Details.dwg; Plotted @: 8/23/2019 2:01:55 PM; Scale multiplier: 0.5; Printed by: Ricardo Paez; Milestone: FINAL SUBMITTAL

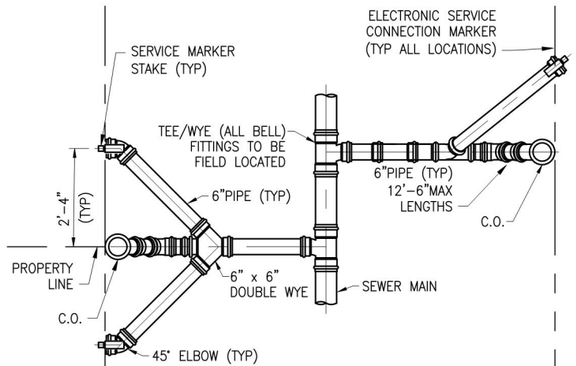

DOUBLE SERVICE SINGLE SERVICE

P L A N

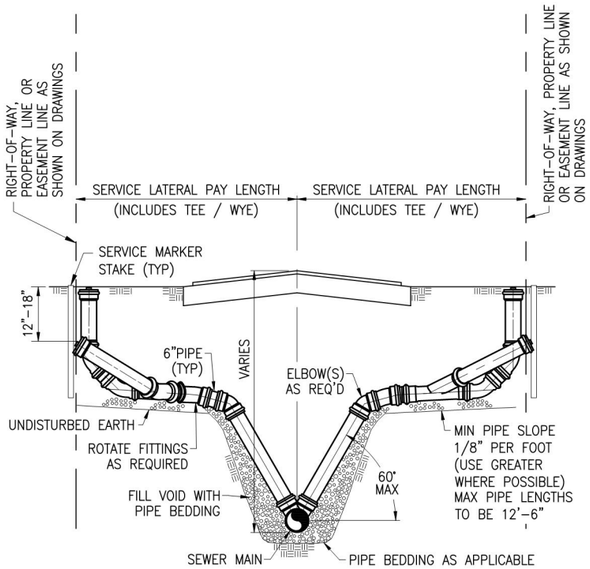

DOUBLE SERVICE SINGLE SERVICE

E L E V A T I O N

SERVICE LATERALS WITH RISERS

SAN08

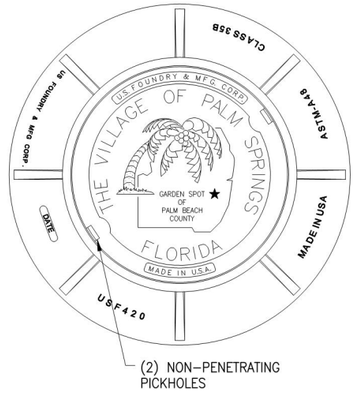

NOTES:
1) MANHOLE RING AND COVER TO BE MODEL USF 420 RING & GB-C COVER ORS AS MANUFACTURED BY U.S. FOUNDRY & MFG. CORP., OR APPROVED EQUAL.

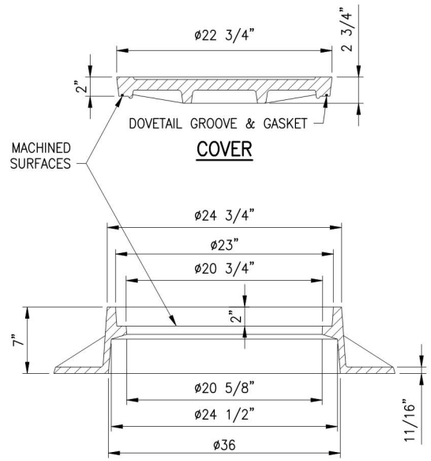

RING

MANHOLE RING AND COVER

SAN09

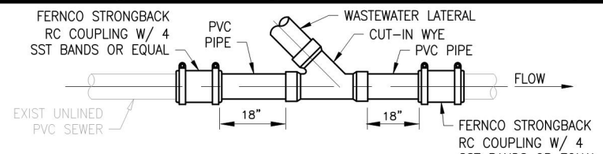

LATERAL CUT-IN (EXISTING UNLINED PVC)

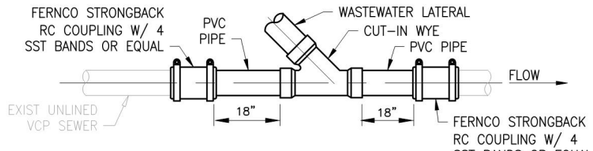

LATERAL CUT-IN (EXISTING UNLINED VCP)

NOTES:
1) PVC PIPE SHALL BE SDR-26, ASTM D-3034. FITTINGS SHALL BE SDR-35 MOLDED

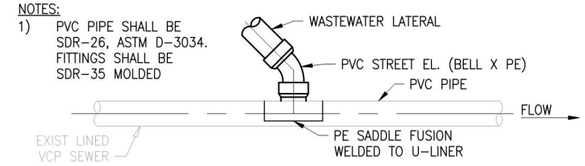

LATERAL SADDLE (EXISTING LINED VCP)

SANITARY SEWER LATERAL CUT-IN

SAN11

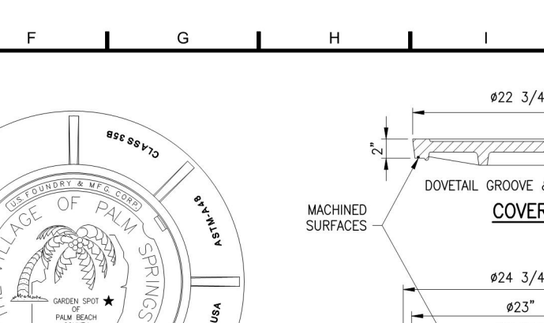

NOTES:
1) CLEANOUTS TO BE LOCATED IN GRASS AREA WHENEVER POSSIBLE, MIN. 3' FROM EDGE OF PAVEMENT, BACK OF CURB, EDGE OF DRIVEWAY, LIGHT POLES, TRANSFORMERS, OR POWER POLES.
2) CLEANOUTS SHALL NOT BE INSTALLED IN TRAFFIC LANES OR AREAS UNDER HEAVY TRAFFIC LOADS.
3) THE COVER TO BE MARKED "S".
4) CLEANOUTS TO BE INSTALLED PRIOR TO WATER METER RELEASE.
5) THE DEVELOPER/PROPERTY OWNER OR ASSIGNEE SHALL BE RESPONSIBLE FOR CLEANOUT INSTALLATION PRIOR TO WATER METER INSTALLATION AS SPECIFIED BY THE VILLAGE.
6) ALONG STREETS WITH ADJACENT NON-EXCLUSIVE UTILITY EASEMENTS, THE CLEANOUTS ENDING VILLAGE MAINTENANCE RESPONSIBILITY SHALL BE INSTALLED MIN. 12", MAX. 18" INTO THE EASEMENT.

TYPICAL CLEANOUT INSTALLATION

SAN10

DSGN: 2 - Design by
DR: 3 - Drawn by
CHK: 4 - Checked by
APVD: 5 - Approved by

VERIFY SCALE
1"
BAR IS ONE INCH ON ORIGINAL DRAWING. ADJUST SCALES AS NECESSARY.

No.	DATE	REVISIONS	BY	APVD
		FINAL SUBMITTAL		

CONSULTANT

VILLAGE OF PALM SPRINGS

VILLAGE UTILITY STANDARDS UPDATED MAY 2019

STANDARD DETAILS - WASTEWASTER COLLECTION

DWG NO. 26 OF 46
SHEET SAN-02
PROJ. NO. 400-080.00
DATE JULY 2, 2019

File name: C:\Civil 3D Projects\400-080.01_Village Utility Standards Update - 2018\01_Working\400-080.01_Waste Water Collection Details.dwg; Plotted @: 8/23/2019 2:01:57 PM; Scale multiplier: 0.5; Printed by: Ricardo Paez; Milestone: FINAL SUBMITTAL

FINAL SUBMITTAL

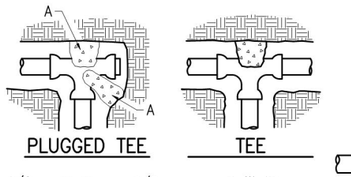

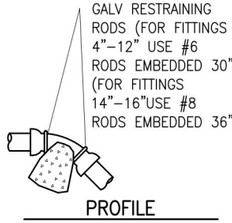

VOLUME OF THRUST BLOCKS FOR VERTICAL BENDS IN CUBIC YARDS			
FITTING SIZE	BENDS		
	11-1/4°	22-1/2°	45°
4"	0.2	0.4	1.1
6"	0.4	1.0	2.7
8"	0.6	1.5	4.0
10"	0.9	2.3	6.0
12"	1.3	3.2	8.5
14"	1.8	4.3	11.5
16"	2.3	5.6	14.8

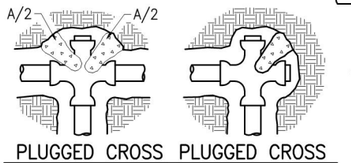

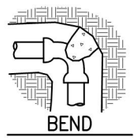



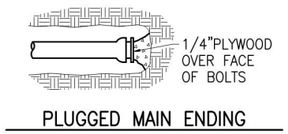

BEARING AREA OF THRUST BLOCKS IN SQ.FT. (HORIZONTAL FITTINGS)							
FITTING SIZE	BENDS			TEE,WYE PLUG,OR CAP	TEE (PLUGGED RUN		90 BEND OR PLUGGED CROSS
	11-1/4°	22-1/2°	45°		A1	A2	
4"			1.0	1.0	1.9	1.4	1.4
6"		1.0	1.6	2.1	4.3	3.0	3.0
8"	1.0	1.5	2.9	3.8	7.6	5.4	5.3
10"	1.2	2.4	4.6	5.9	11.8	8.4	8.4
12"	1.7	3.4	6.6	8.5	17.0	12.0	12.0
14"	2.3	4.6	8.9	11.5	23.0	16.3	16.3
16"	3.0	6.0	11.6	15.0	30.0	21.3	21.3
18"	3.8	7.6	14.6	19.0	38.0	27.0	27.0
20"	4.7	9.4	18.1	23.5	47.0	33.3	33.3
24"	6.8	13.6	26.2	34.0	68.0	48.0	48.0

THRUST BLOCK NOTES

1) REQUIRED VOLUMES OR BEARING AREAS INDICATED AT FITTINGS ARE BASED UPON TEST PRESSURES OF 150 PSIG, 2,000 LBS/SF ALLOWABLE SOIL BEARING STRESS AND THE WEIGHT OF CONCRETE EQUAL TO 4050 LBS/CY.
2) BEARING AREAS OF THRUST BLOCKS SHALL NOT BE LESS THAN 1.0 SF.
3) KEEP CONCRETE CLEAR OF JOINT AND JOINT ACCESSORIES AND WRAP THE FITTING WITH VISQUEEN PRIOR TO PLACING CONCRETE.
4) BEARING AREAS, VOLUMES, AND SPECIAL BLOCKING DETAILS SHOWN ON DRAWINGS SHALL TAKE PRECEDENCE OVER THIS STANDARD.
5) THRUST BLOCKS FOR VERTICAL BENDS HAVING DOWNWARD RESULTANT THRUSTS SHALL BE THE SAME AS HORIZONTAL BENDS.
6) COMPUTE BEARING AREAS FOR HORIZONTAL BEND THRUST BLOCKS AT DIFFERENT TEST PRESSURES AND SOIL BEARING STRESSES WITH THE FOLLOWING EQUATION:
   BEARING AREA = (REQUIRED TEST PRESSURE/150 X (2,000/ACTUAL SOIL BEARING STRESS) X (TABLE VALUE)
7) COMPUTE VOLUMES OF CONCRETE FOR VERTICAL BENDS HAVING UPWARD RESULTANT THRUSTS AT DIFFERENT TEST PRESSURES WITH THE FOLLOWING EQUATION:
   VOLUME = (REQUIRED TEST PRESSURE/150) X (TABLE VALUE)

(THRUST BLOCKS ALLOWED AT LOCATIONS SHOWN ON DRAWINGS ONLY)

THRUST BLOCK NOTES AND DETAILS

FM01

FITTING TYPE		MIN LENGTH TO BE RESTRAINED (FT) PER PIPE DIA. 4"	6"	8"	10"	12"
90° HORIZ. BEND		15	21	27	32	37
45° HORIZ. BEND		6	9	11	13	15
22-1/2° HORIZ. BEND		3	4	5	6	7
11-1/4° HORIZ. BEND		1	2	3	3	4
45° VERT. OFFSET	UPPER BEND	13	18	24	28	33
	LOWER BEND	7	6	7	9	10
22-1/2° VERT. OFFSET	UPPER BEND	6	9	11	14	16
	LOWER BEND	4	3	3	4	5
PLUG (DEAD END)		31	44	57	69	81
VALVE		31	44	57	69	81
4" x Ø" TEE	RUN	5	–	–	–	–
	BRANCH	9	–	–	–	–
6" x Ø" TEE	RUN	5	5	–	–	–
	BRANCH	1	21	–	–	–
8" x Ø" TEE	RUN	5	5	5	–	–
	BRANCH	1	14	34	–	–
10" x Ø" TEE	RUN	5	5	5	5	–
	BRANCH	1	5	28	45	–
12" x Ø" TEE	RUN	5	5	5	5	5
	BRANCH	1	1	21	40	57
6" x Ø" REDUCER	LARGE SIDE	23	–	–	–	–
8" x Ø" REDUCER	LARGE SIDE	41	24	–	–	–
10" x Ø" REDUCER	LARGE SIDE	56	42	23	–	–
12" x Ø" REDUCER	LARGE SIDE	70	59	43	40	–

NOTES

1) RESTRAINT INFORMATION FOR DUCTILE IRON PIPE INSTALLATION.
2) MINIMUM LENGTH TO BE RESTRAINED BASED ON MINIMUM 2'–6" OF COVER, MAXIMUM TEST PRESSURE OF 150 PSI, AND A SAFETY FACTOR OF 2. NOTIFY ENGINEER OF ANY DISCREPANCY THAT REQUIRES CLARIFICATION.
3) MINIMUM NUMBER OF JOINTS TO BE RESTRAINED SHALL BE ALL JOINTS WITHIN MINIMUM LENGTH GIVEN BY TABLE.
4) MINIMUM LENGTH TO BE RESTRAINED IS MEASURED IN FEET FROM FITTING OR VALVE.
5) ALL JOINTS BETWEEN UPPER AND LOWER OFFSET BENDS SHALL BE RESTRAINED.
6) ALL JOINTS BETWEEN LOWER BENDS OF CONFLICT CROSSINGS SHALL BE RESTRAINED.
7) RESTRAINED LENGTHS FOR REDUCERS ARE ON LARGE DIAMETER SIDE.
8) RUN RESTRAINT FOR TEES IS UPSTREAM AND DOWNSTREAM.
9) RESTRAINT LENGTHS FOR VALVES ARE REQUIRED UPSTREAM AND DOWNSTREAM.
10) NOTIFY THE ENGINEER IF ATTACHED LENGTH OF PIPE IN EACH DIRECTION ALONG THE RUN OF THE TEE IS SIGNIFICANTLY GREATER THAN 5.0' (LENGTH SHALL NOT BE LESS THAN 5.0'). THE MINIMUM LENGTH OF A BRANCH OF A TEE TO BE RESTRAINED AS SHOWN IN THE ABOVE TABLE IS CALCULATED ASSUMING THE LENGTH OF ATTACHED PIPE ALONG THE RUN OF TEE IN EACH DIRECTION IS 5.0'.
11) JOINT RESTRAINTS SHALL BE AS SPECIFIED.
12) COMPUTE LENGTHS TO BE RESTRAINED AT TEST PRESSURES OTHER THAN 150PSI WITH THE FOLLOWING EQUATION:
    LENGTH = (REQUIRED TEST PRESSURE/150) X (TABLE VALUE)
13) IF DEPTH OF COVER IS LESS THAN 2'–6" RESTRAIN ALL JOINTS PER SPECIFICATIONS.

FM02

DUCTILE IRON THRUST RESTRAINT TABLE

NOTES:
1) TOP OF BRASS MARKER MUST BE FLUSH WITH SURROUNDING SURFACE AND NOT CREATE A 1/8" TRIPPING HAZARD.
2) FLOW STREAM I.D.'S:
   FM = FORCE MAIN

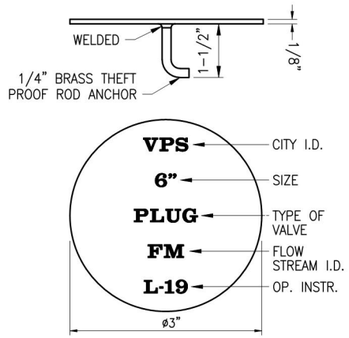

FM03

VALVE MARKER

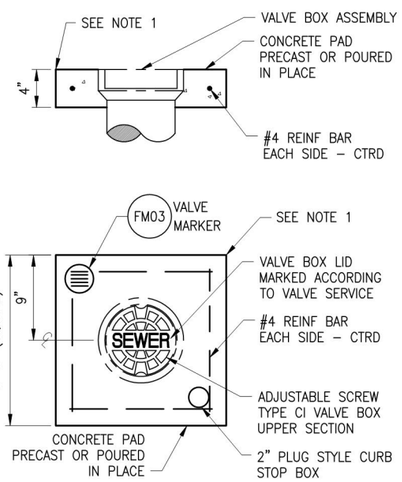

NOTES:
1. UTILIZE 3/8" RADIUS TOOLED EDGES IF PAD IS LOCATED IN UNPAVED AREAS.

FM04

CONCRETE VALVE BOX PAD

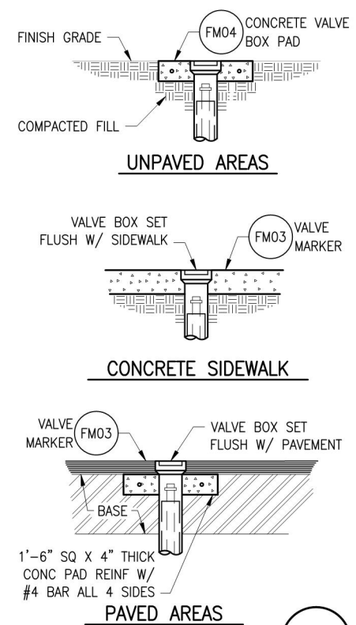

FM05

VALVE BOX SETTINGS

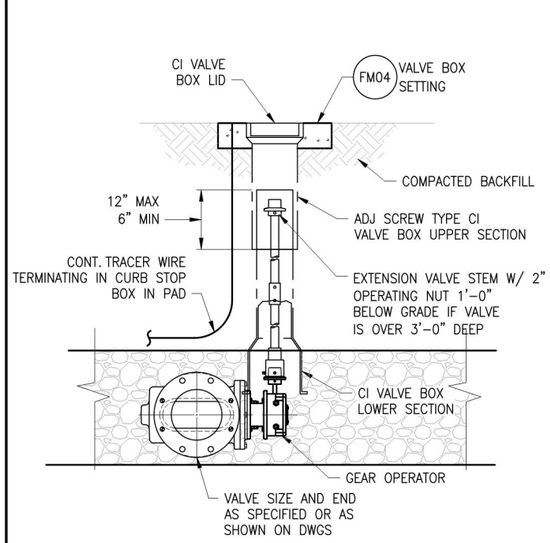

FM06

PLUG VALVE W/ GEAR OPERATOR

NOTES:
1) WHERE POSSIBLE AND MINIMUM COVER CAN BE MAINTAINED, WATER MAIN SHALL CROSS OVER CONFLICT UTILITY AS PER STANDARD SEPARATION STATEMENT.
2) MINIMUM CLEARANCES SHALL BE AS FOLLOWS :

EXISTING UTILITY	MINIMUM CLEARANCE
SANITARY SEWER OR FORCE MAIN	18"
STORM SEWER	18"
OTHER UTILITIES	6"

3) ALL JOINTS OF CROSSING SHALL BE RESTRAINED INCLUDING ALL PIPE JOINTS UPSTREAM AND DOWNSTREAM OF UPPER BENDS AS PER DETAIL 105
4) PIPE JOINTS MAY BE DEFLECTED AS AN ALTERNATIVE TO FITTINGS AT CONTRACTORS DISCRETION. DO NOT EXCEED PIPE MANUFACTURERS SPECIFIED MAXIMUM DEFLECTION.
5) DETAIL MAY BE MODIFIED IN FIELD WHERE TWO (2) OR MORE UTILITY CONFLICTS ARE IN CLOSE PROXIMITY WITH EACH OTHER. COORDINATE IN FIELD WITH RESIDENT PROJECT REPRESENTATIVE.

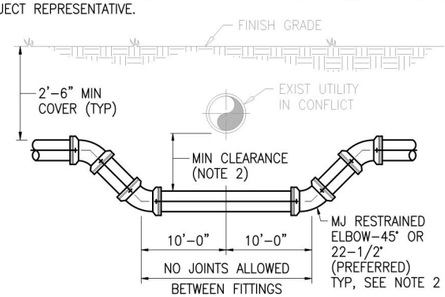

FM07

UTILITY CROSSING

DSGN: 2 - Design by	VERIFY SCALE						
DR: 3 - Drawn by	1"			FINAL SUBMITTAL			CONSULTANT
CHK: 4 - Checked by	BAR IS ONE INCH ON ORIGINAL DRAWING. ADJUST SCALES AS NECESSARY.	No.	DATE	REVISIONS	BY	APVD	
APVD: 5 - Approved by							

VILLAGE OF PALM SPRINGS

VILLAGE UTILITY STANDARDS UPDATED MAY 2019

STANDARD DETAILS - FORCE MAIN

DWG NO. 27 OF 46 | SHEET FM-01 | PROJ. NO. 400-080.00 | DATE JULY 2, 2019

File name: C:\Civil 3D Projects\400-080.01_Village Utility Standards Update - 2018\01_Working\400-080.01_Force Main Details.dwg; Plotted @: 8/23/2019 2:02:04 PM; Scale multiplier: 0.5; Printed by: Ricardo Paez; Milestone: FINAL SUBMITTAL

FINAL SUBMITTAL

NOTES:

1) 4000 P.S.I. TYPE II CONCRETE.
2) VAULT SHALL BE PRECAST WITH STEEL REINFORCING. SHOP DRAWING IS REQUIRED.
3) AIR RELEASE VALVE SHALL BE TYPE AND SIZE APPROPRIATE FOR SERVICE INTENDED. FORCE MAINS REQUIRE 2" MIN.
4) ALL OPENINGS SHALL BE SEALED WITH WATERPROOF NON-SHRINKING GROUT.
5) OTHER VAULT AND COVER DESIGNS MAY BE USED UPON SUBMITTAL AND APPROVAL OF SHOP DRAWINGS.
6) COAT INSIDE WITH AN APPROVED CORROSION BARRIER SYSTEM.
7) DUCTILE IRON PIPE IS REQUIRED THROUGH THE VAULT. NO PIPE JOINTS WITHIN THE VAULT.
8) THREADED AREAS OF CORPORATION STOP SHALL BE SPIRAL WRAPPED WITH TWO WRAPS OF TEFLON TAPE.
9) LARGER VAULTS WILL BE REQUIRED FOR PIPES LARGER THAN 12"

PIPE SIZE	MIN. VAULT SIZE
4"–12"	4'W X 4'L
16"–24"	4'W X 5'L
30"–42"	4'W X 6'L

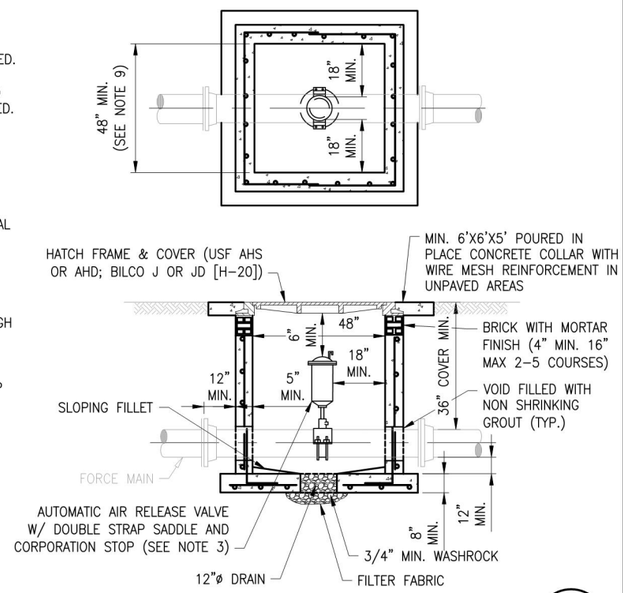

FORCE MAIN AIR RELEASE VALVE & VAULT OUTSIDE OF R/W, NON TRAFFIC AREAS

FM08

NOTES:

1) PRECAST CONCRETE TYPE II 4000 P.S.I. A SHOP DRAWING IS REQUIRED.
2) ALL OPENINGS SHALL BE SEALED WITH A WATERPROOF NON-SHRINKING GROUT.
3) LIFT HOLES ARE PERMITTED.
4) ALL PIPE HOLES SHALL BE PRECAST OR CORE-DRILLED.
5) MANHOLE FABRICATION SHALL BE IN ACCORDANCE WITH A.S.T.M. C-478 LATEST STANDARD.
6) COAT INSIDE WITH AN APPROVED PROTECTIVE CORROSION BARRIER SYSTEM.
7) CONCRETE COLLAR REQUIRED WHEN MANHOLE IS OUTSIDE OF PAVEMENT, SEE DETAIL.
8) AIR RELEASE VALVE SHALL BE TYPE AND SIZE APPROPRIATE FOR SERVICE INTENDED (2"MIN.).
9) DUCTILE IRON PIPE IS REQUIRED THROUGH THE MANHOLE. NO PIPE JOINTS INSIDE THE MANHOLE.
10) THREADED AREAS OF CORPORATION STOP SHALL BE SPIRAL WRAPPED WITH TWO WRAPS OF TEFLON TAPE.
11) LARGER MANHOLES WILL BE REQUIRED FOR PIPES LARGER THAN 12"

PIPE SIZE	MIN. MANHOLE DIAMETER
4"–12"	48"
16"–24"	60"
30"–42"	72"

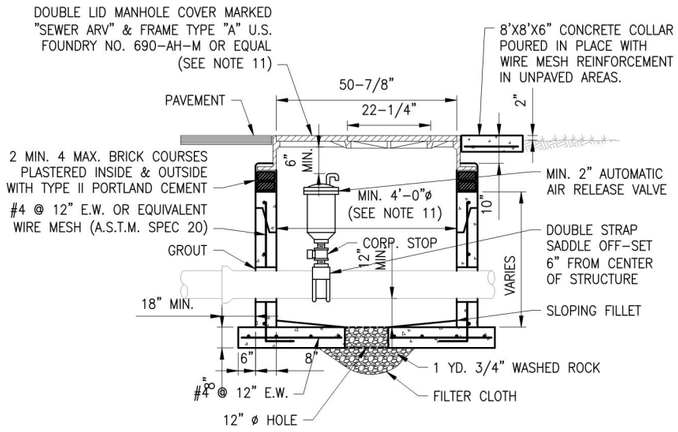

FORCE MAIN AIR RELEASE VALVE AND MANHOLE IN PAVED AREAS AND ROAD R/W

FM09

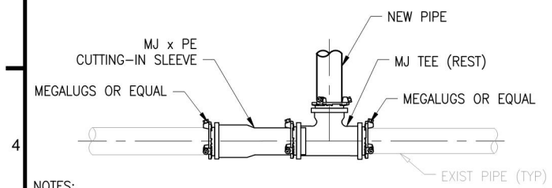

NOTES:

1) MEGALUGS OR EQUAL ARE REQUIRED THROUGHOUT THE ASSEMBLY.

CUT-IN CONNECTION (DUCTILE IRON MJ </= 12")

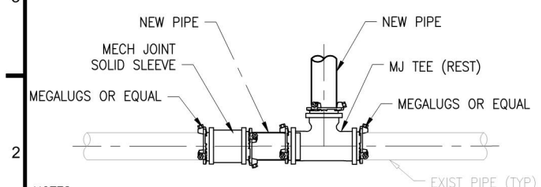

NOTES:

1) MEGALUGS OR EQUAL ARE REQUIRED THROUGHOUT THE ASSEMBLY.

CUT-IN CONNECTION (DUCTILE IRON MJ > 14")

CUT-IN CONNECTION

FM10

	DSGN: 2 - Design by DR: 3 - Drawn by CHK: 4 - Checked by APVD: 5 - Approved by	VERIFY SCALE 1" BAR IS ONE INCH ON ORIGINAL DRAWING. ADJUST SCALES AS NECESSARY.	No.	DATE	FINAL SUBMITTAL REVISIONS	BY	APVD	CONSULTANT	**VILLAGE OF PALM SPRINGS** VILLAGE UTILITY STANDARDS UPDATED MAY 2019	STANDARD DETAILS - FORCE MAIN	DWG NO. 28 OF 46 SHEET FM-02 PROJ. NO. 400-080.00 DATE JULY 2, 2019

GENERAL NOTES:

LIFTS:

1. MINIMUM SLOPE BETWEEN LIFTS 0.20% X LENGTH OR 0.25-FT DROP, WHICHEVER IS GREATER (FOR 4" AND LARGER VACUUM LINES).
2. FOR 3" SERVICE LATERALS, MIN SLOPE BETWEEN LIFTS = 0.2% X LENGTH OR 0.20 FEET FALL, WHICHEVER IS GREATER.
3. MINIMUM SPACING BETWEEN LIFTS – 20'–0".
4. MAXIMUM ELEVATIONS IN ANY ONE LIFT – 3'–0".

SERVICE LINES:

1. MINIMUM LENGTH OF PIPING FROM MAIN TO VALVE PIT – 5'–0".
2. SLOPE FROM VALVE PIT TO MAIN – 2" OR 0.20% FALL (WHICHEVER IS GREATER).
3. MINIMUM DISTANCE FROM VALVE PIT TO LIFT IN SERVICE LINE – 5'–0".
4. MINIMUM DISTANCE FROM LIFT IN SERVICE LINE TO CROSSOVER CONNECTION – 5'–0".

CROSSOVER CONNECTIONS (SERVICE LINE OR BRANCH CONNECTION TO MAIN)

1. MINIMUM SPACING BETWEEN ANY TWO CROSSOVER CONNECTIONS – 5'–0".
2. MINIMUM DISTANCE FROM TOP OF LIFT TO ANY CROSSOVER CONNECTION – 6'–0".
3. ALL CROSSOVER CONNECTIONS MUST ENTER OVER TOP OF THE MAIN (WYE IN VERTICAL POSITION OR 45° ALTERNATE ALIGNMENT).
4. LONG TURN 90° PERMITTED AS PART OF CROSSOVER TO MAIN CONNECTION AT MAIN LINE ONLY.

VAC01

GENERAL VACUUM NOTES

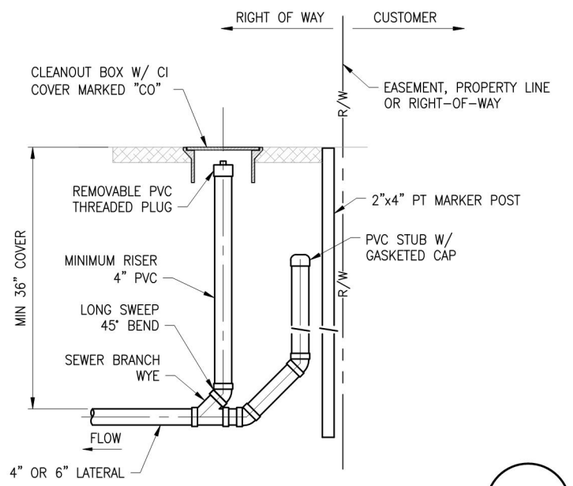

VAC03

CLEANOUT DETAIL

VAC06

CHANGE IN DIRECTION

NOTES:

1. FITTINGS SHALL BE AS SPECIFIED IN SECTION 15481 SEWER SYSTEM AND ACCESSORIES.
2. CONNECTION MAY BE ROTATED TO MAINTAIN ELEVATIONS NOTED ON THE PLAN AND PROFILE SHEETS. THE WYE FITTING MAY BE ROTATED UP TO 45°, BUT IN NO CASE SHALL THE INVERT OF THE BRANCH BE BELOW THE TOP THE MAIN.
3. ADJUST PER FIELD CONDITIONS.
4. FITTING AND PIPING DIAMETERS PER DRAWINGS.

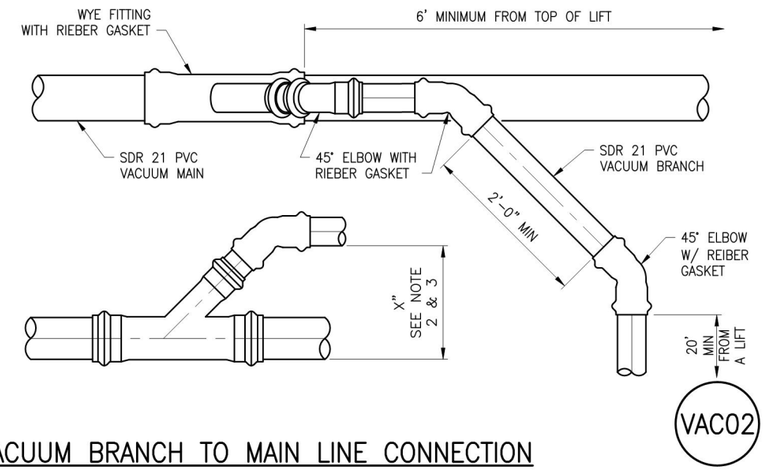

VAC02

VACUUM BRANCH TO MAIN LINE CONNECTION

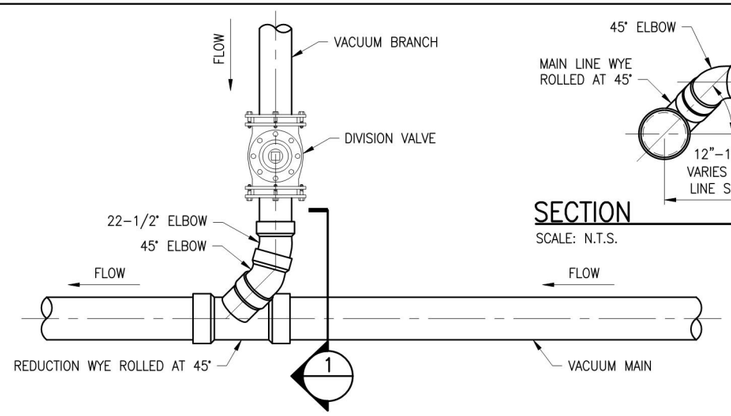

VAC04

ALTERNATE VACUUM BRANCH TO MAIN LINE CONNECTION

SECTION 1

SCALE: N.T.S.

SLOPE SCHEDULE			
PIPE DIA	MINIMUM FALL BETWEEN LIFTS USE GREATER VALUE OF (A) OR (B)		DISTANCE AT WHICH (B) GOVERNS
	(A)	(B)	
3"	0.20FT	0.2% X DISTANCE	>100FT
4"	0.25FT	0.2% X DISTANCE	>125FT
6"	0.25FT	0.2% X DISTANCE	>125FT
8"	0.25FT	0.2% X DISTANCE	>125FT
10"	0.25FT	0.2% X DISTANCE	>125FT
12"	0.25FT	0.2% X DISTANCE	>125FT

NOTES:

1. LIFT MODIFICATIONS MUST BE APPROVED BY THE ENGINEER.
2. ANY LENGTH SHORTER THAN THE GOVERNING DISTANCE SHOWN SHALL USE THE MINIMUM FALL INDICATED.

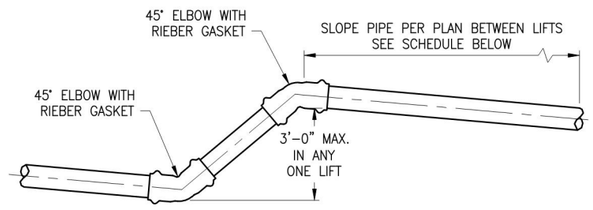

VAC07

LIFT DETAIL AND SLOPE SCHEDULE

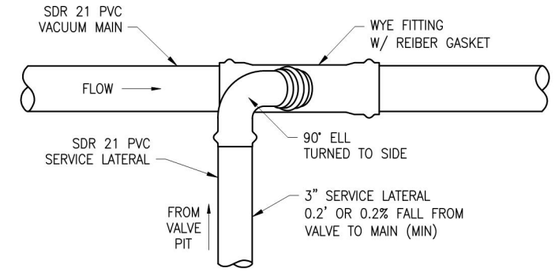

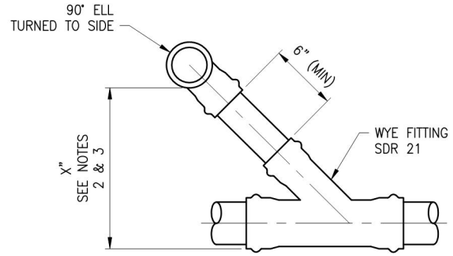

NOTES:

1. FITTINGS SHALL BE AS SPECIFIED IN SECTION 15481 SEWER SYSTEM AND ACCESSORIES.
2. CONNECTION MAY BE ROTATED TO MAINTAIN ELEVATIONS NOTED ON THE PLAN AND PROFILE SHEETS.
3. ADJUST PER FIELD CONDITIONS.
4. FITTING AND PIPING DIAMETERS PER DRAWINGS.

VAC05

VACUUM SERVICE LATERAL TO MAIN OR BRANCH CONNECTION

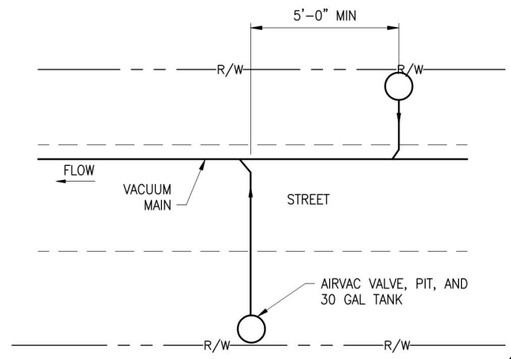

VAC08

MINIMUM SPACING BETWEEN CONNECTIONS

DSGN: 2 - Design by	VERIFY SCALE						VILLAGE OF PALM SPRINGS	DWG NO. 29 / SHEET VC-01
DR: 3 - Drawn by	1"			FINAL SUBMITTAL			VILLAGE UTILITY STANDARDS UPDATED MAY 2019	STANDARD DETAILS - VACUUM
CHK: 4 - Checked by	BAR IS ONE INCH ON ORIGINAL DRAWING. ADJUST SCALES AS NECESSARY.							OF 46 / PROJ. NO. 400-080.00
APVD: 5 - Approved by		No.	DATE	REVISIONS	BY	APVD	CONSULTANT	DATE JULY 2, 2019

File name: C:\Civil 3D Projects\400-080.01_Village Utility Standards Update - 2018\01_Working\400-080.01_Vacuum Sewer Details.dwg; Plotted @: 8/23/2019 2:02:16 PM; Scale multiplier: 0.5; Printed by: Ricardo Paez; Milestone: FINAL SUBMITTAL

FINAL SUBMITTAL

NOTES:

1) SAND/OIL INTERCEPTORS SHALL BE WATERTIGHT AND SHALL BE BUILT OF PRECAST CONCRETE WHICH HAS A DESIGN COMPRESSIVE STRENGTH OF MINIMUM 3000 PSI AFTER 28 DAYS CURE. THE DESIGN, SIZING AND CONSTRUCTION MUST CONFORM TO THIS STANDARD AND TO ALL APPLICABLE BUILDING CODE AND HEALTH DEPARTMENT REQUIREMENTS AND REGULATIONS, INCLUDING, BUT NOT LIMITED TO CHAPTER 64E-6, FLORIDA ADMINISTRATIVE CODE. WALL AND SLAB THICKNESS SHOWN ARE MINIMUMS, AND SHALL BE DETERMINED BY THE OWNERS ENGINEER. THE CONCRETE BOX SHALL HAVE PRECAST HOLES AND CAST-IN BOOTS WHENEVER POSSIBLE.

2) SHOP DRAWINGS ARE REQUIRED PRIOR TO PRECONSTRUCTION MEETING. OTHER DESIGNS MAY BE USED UPON SUBMITTAL AND APPROVAL OF SHOP DRAWINGS.

3) INSPECTION PORTS (CLEAN OUTS) SHALL BE EASILY ACCESSIBLE FOR INSPECTION/SAMPLING.

4) THE INTERCEPTOR SHALL BE LOCATED IN GRASS AREA/NON-TRAFFIC AREA WHENEVER POSSIBLE. THE SURFACE SURROUNDING THE INTERCEPTOR SHALL BE SLOPED TO DRAIN STORM WATER AWAY FROM THE INTERCEPTOR.

5) THE CAPACITY DETERMINATION FOR THE INTERCEPTOR IS THE RESPONSIBILITY OF THE OWNER/CUSTOMER. THE MINIMUM VOLUME OF A SAND/OIL INTERCEPTOR SHALL BE 750 GALLONS. WHEN THE REQUIRED EFFECTIVE CAPACITY OF THE SAND/OIL INTERCEPTOR IS GREATER THAN 750 GALLONS, INSTALLATION OF SINGLE COMPARTMENT SAND/OIL INTERCEPTORS IN SERIES IS REQUIRED.

6) THE PROPERTY OWNER/CUSTOMER SHALL BE RESPONSIBLE FOR THE OPERATION AND MAINTENANCE OF THE INTERCEPTOR.

7) SAND/OIL INTERCEPTOR SHALL NOT BE USED FOR THE PURPOSE OF INTERCEPTION OF GREASE FROM FOOD HANDLING ESTABLISHMENTS.

8) EACH FACILITY REQUIRED TO HAVE A SAND/OIL INTERCEPTOR SHALL HAVE A SEPARATE INTERCEPTOR AND SHALL BE INDIVIDUALLY METERED THROUGH THE VILLAGE.

9) MANHOLE LIDS SHALL BE MACHINED TO ACCEPT INFLOW PREVENTER.

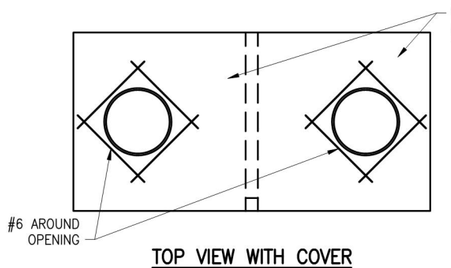

TOP VIEW WITH COVER

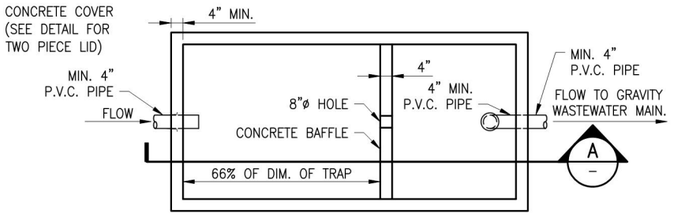

TOP VIEW WITH COVER REMOVED

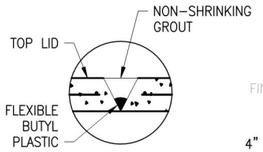

TWO PIECE LID DETAIL

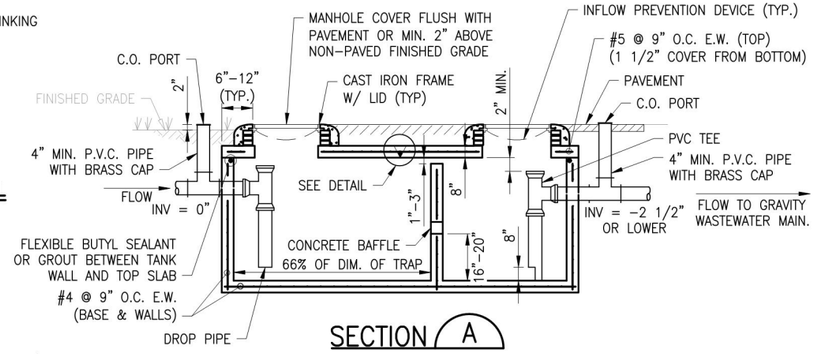

SAND/OIL INTERCEPTOR

MISC-01

NOTES:

1) THE GREASE TRAP SHALL BE WATERTIGHT AND GAS TIGHT AND SHALL BE FABRICATED FROM STEEL, ACID RESISTANT COATED INTERIOR AND EXTERIOR.

2) THE GREASE TRAP SHALL BE CERTIFIED AND TAGGED BY THE SEAL OF THE PLUMBING AND DRAINAGE INSTITUTE (PDI), AND PDI RATED AT 50 GPM FLOW RATE AND 100 LBS. GREASE CAPACITY. THE GREASE TRAP SIZE, DESIGN AND INSTALLATION MUST COMPLY OR EXCEED THE APPLICABLE BUILDING CODES AND REGULATIONS.

3) THE GREASE TRAP MAY BE USED IF AN OIL/GREASE INTERCEPTOR IS NOT REQUIRED BY THE VILLAGE AND ONLY FOR APPLICATIONS UP TO 25 GPM FLOW RATE (ONE MINUTE FLOW) OR 50 GPM (TWO MINUTE FLOW), DETERMINED USING THE PDI G 101 STANDARD. FOR HIGHER FLOW RATES OR GREASE CAPACITY GREATER THAN 50 LBS., AN APPROVED "OIL/GREASE INTERCEPTOR" WILL BE REQUIRED. A DESIGN CALCULATION SHALL BE SUBMITTED FOR APPROVAL WITH A SHOP DRAWING PRIOR TO PRE- CONSTRUCTION MEETING. THE SHOP DRAWING SHALL BE SIGNED BY THE DESIGNING ENGINEER AND BY THE CONTRACTOR. THE PROJECT NAME WITH STREET ADDRESS OF THE FACILITY (IF AVAILABLE) SHALL BE SHOWN ON THE SHOP DRAWING. OTHER DESIGNS MAY BE USED UPON APPROVAL OF SHOP DRAWINGS.

4) THE GREASE TRAP SHALL BE LOCATED OUTDOORS, EASY ACCESSIBLE FOR MAINTENANCE AND SAMPLING, PREFERABLY IN GRASS AREA, NOT IN TRAFFIC AREA, PARKING SPACES OR SIDEWALKS. THE SURFACE SURROUNDING THE GREASE TRAP SHALL BE SLOPED TO DRAIN STORM WATER AWAY FROM THE GREASE TRAP.

5) THE GREASE TRAP SHALL NOT BE USED FOR THE PURPOSE OF INTERCEPTING SAND AND OIL FROM NON-FOOD HANDLING ESTABLISHMENTS.

6) THE PROPERTY OWNER/CUSTOMER SHALL BE RESPONSIBLE FOR THE OPERATION AND MAINTENANCE OF THE GREASE TRAP.

7) EACH FACILITY WITH A GREASE TRAP SHALL BE INDIVIDUALLY METERED THROUGH THE VILLAGE.

8) EACH FACILITY WHICH IS REQUIRED TO INSTALL A GREASE TRAP SHALL HAVE A SEPARATE (NOT SHARED) GREASE TRAP.

9) INSPECTION PORTS (TWO-WAY CLEAN OUTS) SHALL BE EASILY ACCESSIBLE FOR INSPECTION AND SAMPLING.

10) A "GREASE TRAP" OR "OIL/GREASE INTERCEPTOR" SHALL BE REQUIRED TO RECEIVE THE DRAINAGE FROM FIXTURES AND EQUIPMENT (SINKS, DISHWASHERS, FLOOR DRAINS, CAN WASH AREAS, ETC.) WITH GREASE LADDEN WASTE LOCATED IN COMMERCIAL FOOD PREPARATION AREAS SUCH AS RESTAURANTS, HOTEL KITCHENS, HOSPITALS, SCHOOL KITCHENS, BARS, FACTORY CAFETERIAS, CLUBS, ETC.

11) THE "GREASE TRAP" OR "OIL/GREASE INTERCEPTOR" SHALL BE LOCATED AS CLOSE PRACTICALLY POSSIBLE TO THE FIXTURES AND EQUIPMENT GENERATING GREASE.

12) GREASE TRAPS SHALL BE EQUIPPED WITH DEVICES TO CONTROL THE RATE OF FLOW, SO THE RATE OF THE FLOW DO NOT EXCEED 25 GPM. THE FLOW CONTROL DEVICE SHALL BE INSTALLED IN ACCORDANCE WITH THE CODE AND MANUFACTURER'S INSTRUCTIONS.

13) A "SOLIDS INTERCEPTOR" SHALL BE CONSIDERED TO BE INSTALLED UPSTREAM OF A " GREASE TRAP" WHERE SUBSTANTIAL AMOUNT OF SOLIDS FROM FOOD GRINDERS, DISPOSALS MAY BE PRESENT.

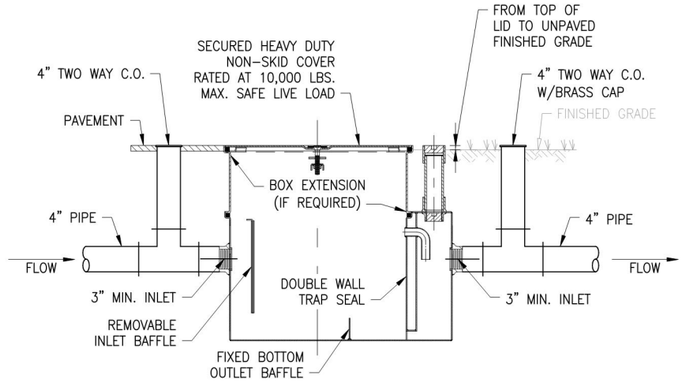

MISC-02

GREASE TRAP

DSGN: 2 - Design by DR: 3 - Drawn by CHK: 4 - Checked by APVD: 5 - Approved by	VERIFY SCALE 1" BAR IS ONE INCH ON ORIGINAL DRAWING. ADJUST SCALES AS NECESSARY.	No.	DATE	FINAL SUBMITTAL REVISIONS	BY	APVD	CONSULTANT	

VILLAGE OF PALM SPRINGS

VILLAGE UTILITY STANDARDS UPDATED MAY 2019

MISCELLANEOUS DETAILS

DWG NO.	SHEET
45	MISC-01
OF 46	PROJ. NO. 400-080.00
DATE	JULY 2, 2019

File name: C:\Civil 3D Projects\400-080.01_Village Utility Standards Update - 2018\01_Working\400-080.01_Miscellaneous Details.dwg; Plotted @: 8/23/2019 2:03:34 PM; Scale multiplier: 0.5; Printed by: Ricardo Paez; Milestone: FINAL SUBMITTAL

FINAL SUBMITTAL

NOTES:

1) GREASE INTERCEPTORS SHALL BE WATERTIGHT AND SHALL BE BUILT OF PRE CAST CONCRETE WHICH HAS A DESIGN COMPRESSIVE STRENGTH OF MINIMUM 3000 PSI AFTER 28 DAYS CURE. THE DESIGN, SIZING AND CONSTRUCTION MUST CONFORM TO THIS STANDARD AND TO ALL APPLICABLE BUILDING CODE AND HEALTH DEPARTMENT REQUIREMENTS AND REGULATIONS, INCLUDING, BUT NOT LIMITED TO CHAPTER 64E–6, FLORIDA ADMINISTRATIVE CODE. WALL AND SLAB THICKNESS SHOWN ARE MINIMUMS, AND SHALL BE DETERMINED BY THE OWNERS ENGINEER. THE CONCRETE BOX SHALL HAVE PRE CAST HOLES AND CAST–IN BOOTS WHENEVER POSSIBLE.

2) THE OIL/GREASE INTERCEPTOR SHALL BE USED FOR APPLICATIONS EXCEEDING 25 GPM FLOW RATE, DETERMINED USING THE PLUMBING AND DRAINAGE INSTITUTE PDI G101 STANDARD. A DESIGN CALCULATION MUST BE SUBMITTED FOR APPROVAL WITH A SHOP DRAWING PRIOR TO THE PRE–CONSTRUCTION MEETING. FOR APPLICATIONS UP TO 25 GPM FLOW RATE (ONE MINUTE FLOW) OR 50 GPM (TWO MINUTE FLOW), AN APPROVED OUTDOOR "GREASE TRAP" MAY BE USED; OTHER DESIGNS MAY BE CONSIDERED UPON SUBMITTAL AND APPROVAL OF SHOP DRAWINGS.

3) INSPECTION PORTS (CLEAN OUTS) SHALL BE EASILY ACCESSIBLE FOR INSPECTION/SAMPLING.

4) THE INTERCEPTOR AND CLEAN–OUTS PORT SHALL BE LOCATED OUTDOORS AND IN NON–TRAFFIC AREA WHENEVER POSSIBLE. THE SURFACE SURROUNDING THE INTERCEPTOR SHALL BE SLOPED TO DRAIN STORM WATER AWAY FROM THE INTERCEPTOR.

5) THE CAPACITY DETERMINATION FOR THE INTERCEPTOR IS THE RESPONSIBILITY OF THE OWNER/CUSTOMER. THE MINIMUM VOLUME OF ANY GREASE INTERCEPTOR SHALL BE 750 GALLONS AND THE MAXIMUM VOLUME OF A SINGLE GREASE INTERCEPTOR SHALL BE 1250 GALLONS. WHEN THE REQUIRED EFFECTIVE CAPACITY OF THE GREASE INTERCEPTOR IS GREATER THAN 1250 GALLONS, INSTALLATION OF MULTIPLE GREASE INTERCEPTORS IN SERIES IS REQUIRED.

6) NO BAFFLE IS REQUIRED IF THERE ARE MULTIPLE GREASE INTERCEPTORS INSTALLED IN SERIES. HOWEVER, CLEANOUT PORTS MUST BE INSTALLED ON EACH END OF EACH INTERCEPTOR.

7) THE PROPERTY OWNER/CUSTOMER SHALL BE RESPONSIBLE FOR THE OPERATION AND MAINTENANCE OF THE INTERCEPTOR.

8) THE GREASE INTERCEPTOR SHALL NOT BE USED FOR THE PURPOSE OF INTERCEPTING SAND AND OIL FROM NON– FOOD HANDLING ESTABLISHMENTS.

9) EACH FACILITY WITH AN OIL/GREASE INTERCEPTOR SHALL HAVE A SEPARATE (NOT SHARED) INTERCEPTOR AND SHALL BE INDIVIDUALLY METERED THROUGH THE VILLAGE.

10) A "GREASE TRAP" OR "OIL/GREASE INTERCEPTOR" SHALL BE REQUIRED TO RECEIVE THE DRAINAGE FROM FIXTURES AND EQUIPMENT (SINKS, DISHWASHERS, FLOOR DRAINS, CAN WASH AREAS, ETC.) WITH GREASE LADEN WASTE LOCATED IN COMMERCIAL FOOD PREPARATION AREAS SUCH AS RESTAURANTS, HOTEL KITCHENS, HOSPITALS, SCHOOL KITCHENS, BARS, FACTORY CAFETERIAS, CLUBS, ETC.

11) THE "GREASE TRAP" OR "OIL/GREASE INTERCEPTOR" SHALL BE LOCATED AS CLOSE AS PRACTICALLY POSSIBLE TO THE FIXTURES AND EQUIPMENT GENERATING GREASE.

12) A "SOLIDS INTERCEPTOR" SHALL BE CONSIDERED TO BE INSTALLED UPSTREAM OF A " GREASE TRAP" WHERE SUBSTANTIAL AMOUNT OF SOLIDS FROM FOOD GRINDERS, DISPOSALS MAY BE PRESENT.

13) MANHOLE COVER SHALL BE MACHINED TO ACCEPT INFLOW PROTECTOR.

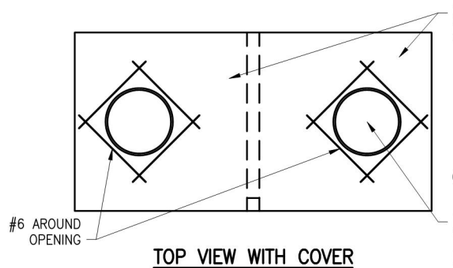

TOP VIEW WITH COVER

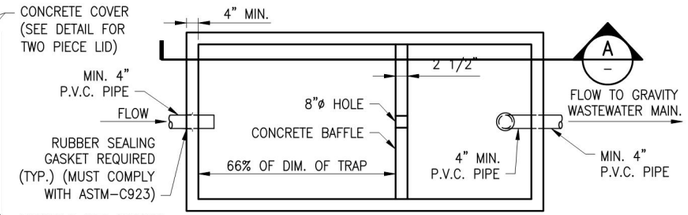

TOP VIEW WITH COVER REMOVED

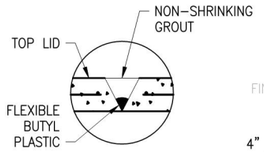

TWO PIECE LID DETAIL

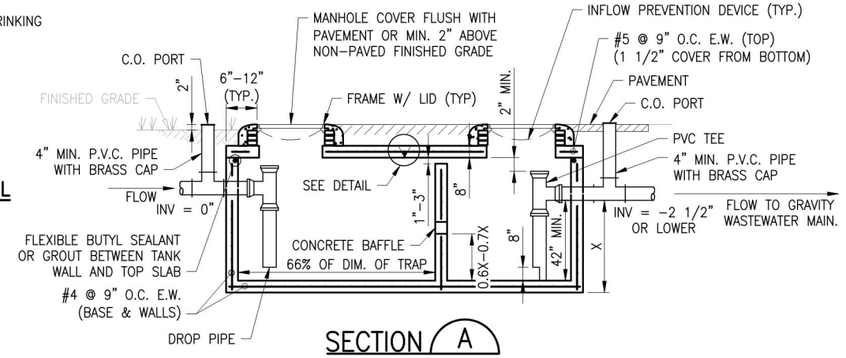

SECTION A

OIL/GREASE INTERCEPTOR

MISC–03

	DSGN: 2 - Design by DR: 3 - Drawn by CHK: 4 - Checked by APVD: 5 - Approved by	VERIFY SCALE 1" BAR IS ONE INCH ON ORIGINAL DRAWING. ADJUST SCALES AS NECESSARY.	No.	DATE	FINAL SUBMITTAL REVISIONS	BY	APVD	CONSULTANT		**VILLAGE OF PALM SPRINGS** VILLAGE UTILITY STANDARDS UPDATED MAY 2019	MISCELLANEOUS DETAILS	DWG NO. 46 / SHEET MISC-02 OF 46 / PROJ. NO. 400-080.00 DATE JULY 2, 2019

File name: C:\Civil 3D Projects\400-080.01_Village Utility Standards Update - 2018\01_Working\400-080.01_Miscellaneous Details.dwg; Plotted @: 8/23/2019 2:03:35 PM; Scale multiplier: 0.5; Printed by: Ricardo Paez; Milestone: FINAL SUBMITTAL

Florida Department of Transportation

RON DESANTIS
GOVERNOR

3400 West Commercial Boulevard
Fort Lauderdale, FL 33309

KEVIN J. THIBAULT
SECRETARY

June 17, 2021

THIS PRE-APPLICATION LETTER IS VALID UNTIL – June 17, 2022
THIS LETTER IS NOT A PERMIT APPROVAL

Imtiaz Ahmed
Atlantic Engineering Services, Inc.
2826 Waters Edge Circle
Greenacres, FL 33413

Dear Imtiaz Ahmed:
RE: Pre-application Review for **Category B Driveway,** Pre-application Meeting Date: **June 17, 2021**
Palm Beach County - Palm Springs; SR 809; Sec. # 93070000; MP: 22.5; Access Class - 5;
Posted Speed - 40; SIS - No; Ref. Project:

Request: Access the site from Line Drive - No proposed driveway connection on SR 809/Military Trail.

SITE SPECIFIC INFORMATION
Project Name & Address: **Medical Office – 1962 S. Military Trail, Palm Springs, Florida**
Applicant/Property Owner: VAANI REAL ESTATE LLC; Parcel Size: **0.59 Acres**
Development Size: **8,600 SF Medical Office**

WE APPROVE YOUR REQUEST

This decision is based on your presentation of the facts, site plan and survey - please see the conditions and comments below. You may choose to review this concept further with the District Access Management Review Committee (AMRC).

Conditions:
- **Any driveway on the side street shall be located at least 30 feet from the SR 809 right-of-way line.**

Comments:
- All driveways not approved in this letter must be fully removed and the area restored.
- A Drainage Permit is required for any stormwater impacts within FDOT right-of-way (i.e. increased runoff or reduction of existing storage).
- The applicant shall donate property to the Department if right-of-way dedication is required to implement the improvements.
- Dimensions between driveways are measured from the near edge of pavement to near edge of pavement and for median openings are measured from centerline to centerline unless otherwise indicated.

The purpose of this Pre-Application letter is to document the conceptual review of the approximate location of driveway(s) to the State Highway System and to note required improvements, if any. This letter shall be submitted with any further reviews and for permitting. The Department's personnel shall review permit plans for compliance with this letter as well as current Department standards and/or specifications. Final design must consider the existing roadway profile and any impacts to the existing drainage system. **Note, this letter does not guarantee permit approval**. The permit may be denied based on the review of the submitted engineering plans. Be aware that any approved median openings may be modified (or closed) in the future, at the sole discretion of the Department. For right-of-way dedication requirements go to: https://osp.fdot.gov; click on Statewide Permit News; Scroll down to District 4; Scroll down to Additional Information and Examples and choose Right-of-way Donations/Dedications.
Please contact the Access Management Manager - Tel. # 954-777-4363 or e-mail: D4AccessManagement@dot.state.fl.us with any questions regarding the Pre-Approval Letter and Permits Office - Tel. # 954-777-4383 with any questions regarding permits.

Sincerely,

Dalila Fernandez, P.E.
District Access Management Manager

cc: Jonathan Overton, P.E., Jerry Dean
File: \\DOTSD4HQFS\Share\Transportation Operations\Traffic Operations\Access Management\1. Pre-Apps and Variance\2021-06-17\3. 93070000 MP 22.5 SR 809_Medical Office\93070 MP 22.5 SR 809_Medical Office.docx

Department of Engineering and Public Works
P.O. Box 21229
West Palm Beach, FL 33416-1229
(561) 684-4000
FAX: (561) 684-4050
www.pbcgov.com

Palm Beach County Board of County Commissioners
Dave Kerner, Mayor
Robert S. Weinroth, Vice Mayor
Maria G. Marino
Gregg K. Weiss
Maria Sachs
Melissa McKinlay
Mack Bernard

County Administrator
Verdenia C. Baker

"An Equal Opportunity Affirmative Action Employer"

printed on sustainable and recycled paper

October 20, 2021

Imtiaz Ahmed, P.E.
Atlantic Engineering Services, Inc.
2826 Waters Edge Circle
Greenacres, FL 33413

RE: Medical Office Building - 1962 S Military Trail
Project #: 211003
Traffic Performance Standards (TPS) Review

Dear Mr. Ahmed:

The Palm Beach County Traffic Division has reviewed the above referenced project Traffic Impact Statement, dated October 11, 2021, pursuant to the Traffic Performance Standards in Article 12 of the Palm Beach County (PBC) Unified Land Development Code (ULDC). The project is summarized as follows:

Municipality:	Palm Springs
Location:	SEC of Line Drive and Military Trail
PCN:	70-42-44-12-00-000-5380
Access:	Two access driveway connections onto Line Drive (As used in the study and is NOT necessarily an approval by the County through this TPS letter)
Existing Uses:	Vacant
Proposed Uses:	Medical Office = 8,050 SF
New Daily Trips:	252
New Peak Hour Trips:	20 (16/4) AM; 25 (7/18) PM
Build-out:	December 31, 2022

Based on our review, the Traffic Division has determined the proposed development does not have significant peak hour traffic impact (as defined in PBC TPS) on the roadway network and, therefore, **meets** the TPS of Palm Beach County.

It is strongly suggested that the western driveway be eliminated and only the eastern driveway be used.

Please note the receipt of a TPS approval letter does not constitute the review and issuance of a Palm Beach County Right-of-Way (R/W) Construction Permit nor does it eliminate any requirements that may be deemed as site related. For work within Palm Beach County R/W, a detailed review of the project will be provided upon submittal for a R/W permit application. The project is required to comply with all Palm Beach County standards and may include R/W dedication.

No building permits are to be issued by the Village after the build-out date specified above. The County traffic concurrency approval is subject to the Project Aggregation Rules set forth in the Traffic Performance Standards Ordinance.

The approval letter shall be valid no longer than one year from date of issuance, unless an application for a Site Specific Development Order has been approved.

an application for a Site Specific Development Order has been submitted, or the approval letter has been superseded by another approval letter for the same property.

If you have any questions regarding this determination, please contact me at 561-684-4030 or email QBari@pbcgov.org.

Sincerely,

Quazi Bari, P.E., PTOE
Manager – Growth Management
Traffic Division

QB:HAqg
ec: Iramis Cabrera, Interim PZ&B Director, Village of Palm Springs
Hanane Akif, P.E., Project Coordinator II, Traffic Division
Steve Bohovsky, Technical Assistant III, Traffic Division

File: General - TPS - Mun - Traffic Study Review
F:\TRAFFIC\HA\MUNICIPALITIES\APPROVALS\2021\211003 - MEDICAL OFFICE BUILDING - 1962 S MILITARY TRAIL.DOCX

LAKE WORTH DRAINAGE DISTRICT

13081 MILITARY TRAIL
DELRAY BEACH, FLORIDA 33484-1105

Board of Supervisors
James M. Alderman
Stephen Bedner
Jeffrey P. Phipps, Sr.
Harry Raucher
John I. Whitworth III
Executive Director
Tommy B. Strowd, P.E.
Attorney
Mark A. Perry, P.A.

January 26, 2022

Iramis Cabrera
Village of Palm Springs
226 Cypress Lane
Palm Springs, Florida 33461-1699

Re: PATEL DENTAL OFFICE
NE Quad of Military Trail and LWDD L-8 Canal
1962 S Military Trail
PCN: 70-42-44-12-00-000-5380
LWDD Record No. RI-21-0067

Dear Ms. Cabrera:

This project is located on the north side of the L-8 Canal and is adjacent.

LWDD has reviewed the revised landscape and irrigation plans and the previous issues have been resolved.

LWDD will require the temporary access easement located on the north side of the L-8 Canal right-of-way to be conveyed from the property owner to LWDD prior to the issuance of LWDD permits. Please contact Dave Bends, PSM, at dbends@lwdd.net or 561-819-5559 to initiate the conveyance process.

If this project will be platting, the easement information will need to be labeled on the plat.

Since LWDD needs to obtain access through the proposed temporary access easement, if the irrigation head located at the southwest corner of the easement is damaged, LWDD will not be responsible for its repair.

LWDD has no objection to the certification of this petition.

Sincerely,

Anne H. Perry

Anne H. Perry
Right-of-Way Specialist

Rogelio J. Perez Gonzalez

From: Turbet, Daniel <Daniel.Turbet@fpl.com>
Sent: Monday, November 8, 2021 13:56
To: Rogelio J. Perez Gonzalez
Subject: FW: Request for Review Proposed Dental Office 1962 S Military Trail

CAUTION: This email originated from outside of the organization. Do not click links or open attachments unless you recognize the sender and are confident the content is safe.

Rogelio,

Please see below from FPL Engineer and Arborist in regards to the proposed plans.

Daniel Turbet
Customer Advisor
Florida Power and Light Company
ISA Certified Arborist FL-6552A
Cell: (561)945-3198
Daniel.turbet@fpl.com

From: Arnold, Alex <Alex.Arnold@fpl.com>
Sent: Monday, November 8, 2021 11:16 AM
To: Turbet, Daniel <Daniel.Turbet@fpl.com>; Ramos, Nicholas <Nicholas.Ramos@fpl.com>
Subject: RE: Request for Review Proposed Dental Office 1962 S Military Trail

I did not see any issues.

Thanks,
Alex Arnold
Associate Engineer
West Palm Service Planning
810 Charlotte Ave
West Palm Beach, FL 33401
(561) 616-1618

*Link to **FPL's Electrical Service Standards**:* https://www.fpl.com/partner/builders/service-standards.html

*Visit the new **FPL Project Portal** at FPL.com/construction to manage your FPL Residential and Commercial construction projects. Get information on construction services and project types, apply for your construction project, track project milestones, manage your project team and more.*

Please contact me with any questions of concerns. If you cannot reach me, feel free to contact my Engineering Leader Jorge Sanchez at (o) 561-616-1657 or Jorge.I.Sanchez@fpl.com

---

From: Turbet, Daniel <Daniel.Turbet@fpl.com>
Sent: Monday, November 8, 2021 10:52 AM

To: Ramos, Nicholas <Nicholas.Ramos@fpl.com>; Arnold, Alex <Alex.Arnold@fpl.com>
Subject: RE: Request for Review Proposed Dental Office 1962 S Military Trail

Thanks Nick.

Alex, let me know if you see any issues and I'll respond back to the Village.

Daniel Turbet
Customer Advisor
Florida Power and Light Company
ISA Certified Arborist FL-6552A
Cell: (561)945-3198
Daniel.turbet@fpl.com

From: Ramos, Nicholas <Nicholas.Ramos@fpl.com>
Sent: Friday, November 5, 2021 5:02 PM
To: Turbet, Daniel <Daniel.Turbet@fpl.com>; Arnold, Alex <Alex.Arnold@fpl.com>
Subject: RE: Request for Review Proposed Dental Office 1962 S Military Trail

Danny,

Landscape approved.

Thank you,

Nicholas Ramos
Senior Arborist – Dsbn & T/S
Florida Power & Light Company
Power Delivery – Vegetation Management
Office: 561-640-2246 | **Mobile:** 954-256-3178
Email: Nicholas.Ramos@fpl.com



From: Turbet, Daniel <Daniel.Turbet@fpl.com>
Sent: Friday, November 5, 2021 11:04 AM
To: Arnold, Alex <Alex.Arnold@fpl.com>; Ramos, Nicholas <Nicholas.Ramos@fpl.com>
Subject: FW: Request for Review Proposed Dental Office 1962 S Military Trail

FYI. Let me know if there are any issues with the site or landscape plans here.

Daniel Turbet
Customer Advisor
Florida Power and Light Company
ISA Certified Arborist FL-6552A
Cell: (561)945-3198
Daniel.turbet@fpl.com

From: Rogelio J. Perez Gonzalez <rperezgonzalez@vpsfl.org>
Sent: Thursday, November 4, 2021 4:35 PM
To: Larry Hymowitz <Larry.Hymowitz@dot.state.fl.us>; Anne Perry <aperry@lwdd.net>; Chris Schulle <CSchulle@WasteProUSA.com>; Turbet, Daniel <Daniel.Turbet@fpl.com>; Yash Nagal <YNagal@PBCgov.org>

Cc: Iramis Cabrera <icabrera@vpsfl.org>
Subject: Request for Review Proposed Dental Office 1962 S Military Trail

Good afternoon,

Please review and comment on this proposed dental office at 1962 S Military Trail.

Thank you for your attention.

Sincerely,

Rogelio Perez
Planner
Planning, Zoning, & Building Department, Village of Palm Springs
(561) 584-8200 Ext. 8462
226 Cypress Lane | Palm Springs, Florida 33461-1604

PLEASE NOTE: Florida has a very broad public records law. E-mail communications to or from the Village of Palm Springs officials and employees are public records and are available upon request. Transmission of sensitive information such as but not limited to social security numbers, credit card information, medical records and criminal justice information (outlined in the FBI CJIS Policy) via email is prohibited. If this message is unexpected or appears suspicious, please notify us immediately by replying to the message.

** Please consider the negative environmental impacts associated with printing email **

VISIT OUR WEBSITE FOR MORE INFORMATION ABOUT THE VILLAGE OF PALM SPRINGS FLORIDA
www.vpsfl.org

Village of Palm Springs
Land Development Department
226 Cypress Lane, Palm Springs, FL 33461
(561) 965-4016 Fax (561) 439-4132

LETTER OF TRANSMITTAL

To: Tom Ceccarelli/Frank Castro
Ed Horton

Date: January 25, 2022

RE: 1962 S Military Trail – Patel Dental Office
Development Plans

Attached are:

x Prints
☐ Reproducibles
☐ Correspondence
☐ Report
☐ Specifications
☐ Applications
☐ Other_____

COPIES	DATE	# OF PAGES	DESCRIPTION
1 (Police)	12/25/2021	7	Development Plans
1 (Utilities)	12/25/2021	1	Site Plan

Transmitted:

☐ For Approval
☐ As Requested
X Review and Comment
☐ Revisions
☐ For Your Use
☐ Other_____

REMARKS:

Upon review, please forward any comments regarding the attached materials to me. Should you have any questions regarding the attached materials, do not hesitate to contact me at rperezgonzalez@vpsfl.org or 561-584-8200 Ext.8462. Thank you for your assistance.

Comments / suggestions
- Need lighting on east side + rear
- Door, facing east, needs security window / peephole

Signed: Rogelio Perez

[signature] 2/2/22

Rogelio J. Perez Gonzalez

From: Christopher Schulle <cschulle@wasteprousa.com>
Sent: Friday, November 5, 2021 07:43
To: Rogelio J. Perez Gonzalez; Larry Hymowitz; Anne Perry; Daniel Turbet; Yash Nagal
Cc: Iramis Cabrera
Subject: RE: Request for Review Proposed Dental Office 1962 S Military Trail

CAUTION: This email originated from outside of the organization. Do not click links or open attachments unless you recognize the sender and are confident the content is safe.

Good morning,
Waste pro has no issues with the proposed.

Chris Schulle
Division Manager
Office # 561-688-8912
Fax # 561-688-8914
Cell # 772-216-4876

From: Rogelio J. Perez Gonzalez <rperezgonzalez@vpsfl.org>
Sent: Thursday, November 4, 2021 4:35 PM
To: Larry Hymowitz <Larry.Hymowitz@dot.state.fl.us>; Anne Perry <aperry@lwdd.net>; Christopher Schulle <cschulle@wasteprousa.com>; Daniel Turbet <Daniel.Turbet@FPL.com>; Yash Nagal <YNagal@PBCgov.org>
Cc: Iramis Cabrera <icabrera@vpsfl.org>
Subject: Request for Review Proposed Dental Office 1962 S Military Trail

You don't often get email from rperezgonzalez@vpsfl.org. Learn why this is important

Good afternoon,

Please review and comment on this proposed dental office at 1962 S Military Trail.

Thank you for your attention.

Sincerely,

Rogelio Perez
Planner
Planning, Zoning, & Building Department, Village of Palm Springs
(561) 584-8200 Ext. 8462
226 Cypress Lane | Palm Springs, Florida 33461-1604

From: Wesley Jolin R. <WJolin@pbcgov.org>
Sent: Tuesday, December 14, 2021 14:41
To: Rogelio J. Perez Gonzalez <rperezgonzalez@vpsfl.org>
Cc: Iramis Cabrera <icabrera@vpsfl.org>
Subject: RE: Request for Review Proposed Dental Office 1962 S Military Trail

CAUTION: This email originated from outside of the organization. Do not click links or open attachments unless you recognize the sender and are confident the content is safe.

No fire rescue comments. Thank you.

Wesley Jolin, IAAI-CFI®
Fire Safety Specialist
Palm Beach County Fire Rescue
wjolin@pbcgov.org
561.233.2695
2300 North Jog Road: Suite 1E-40
West Palm Beach FL 33411

CFN 20210202931
OR BK 32447 PG 966
RECORDED 05/04/2021 08:24:45
Palm Beach County, Florida
AMT 250,000.00
DEED DOC 1,750.00
Joseph Abruzzo
Clerk
Pgs 0966-0967; (2Pgs)

Prepared By/Record and Return To:
Charles W. Edgar, III, Esquire
Cherry, Edgar & Smith, P.A.
8409 No. Military Trail, Suite 123
Palm Beach Gardens, FL 33410

This is not a certified copy

PCN: 70-42-44-12-00-000-5380

$250,000.00

QUIT-CLAIM DEED

THIS QUIT-CLAIM DEED made as of the 19 day of April, 2021, by **ADITI K. PATEL**, a married woman ("**First Party**"), whose mailing address is 1112 Royal Palm Beach Blvd, Royal Palm Beach, Florida 33411 to **VAANI REAL ESTATE LLC**, a Florida limited liability company ("**Second Party**"), whose principal address is 2464 SE Ranch Acres Circle, Jupiter, Florida 33478.

(Wherever used herein the terms "First Party" and "Second Party" include all the parties to this instrument and the heirs, legal representatives and assigns of individuals, and the successors and assigns of corporations.)

WITNESSETH: That the First Party, for and in consideration of the sum of $10.00 and other valuable consideration, receipt whereof is hereby acknowledged, does hereby remise, release and quit-claim unto the Second Party forever, without any representations or warranty of the First Party, all the right, title, interest, claim and demand which the First Party has in and to the following described land situate in Palm Beach County, Florida, to wit:

A portion of Section 12, Township 44 South, Range 42 East, Palm Beach County, Florida being more particularly described as follows:

The West 310 feet of the South one-half of the South one-quarter of the Southwest one-quarter of the Southeast one-quarter, Less the South 40 feet for canal right-of-way and the North 30 feet and the West 53 feet for a road right of way.

SUBJECT TO conditions, restrictions, easements, limitations and zoning ordinances of record, if any, however such reference shall not serve to reimpose same, and real estate taxes for the year 2021 and subsequent years.

TO HAVE AND TO HOLD, the same together with all and singular the appurtenances thereunto belonging or in anywise appertaining, and all the estate, right, title interest, lien, equity and claim whatsoever the First Party, either in law or equity, to the only proper use and benefit of the Second Party forever.

THE SUBJECT PROPERTY BEING CONVEYED HEREIN IS VACANT LAND AND IS NOT THE HOMESTEAD PROPERTY OF THE FIRST PARTY.

This is not a certified copy

IN WITNESS WHEREOF, First Party has hereunto set her hand and seal the day and year first above written.

WITNESSED BY:

Teresa Bradford
Print Name: Vivian D. Bradford

Print Name: FERRIA Gordon

FIRST PARTY:

ADITI K. PATEL

STATE OF FLORIDA

COUNTY OF PALM BEACH

The foregoing Quit Claim Deed was acknowledged before me, by means of ☒ physical presence or ☐ online notarization, this 19 day of April, 2021 by Aditi K Patel, who is personally known to me or has provided FIDL identification.

JANINE TERRACCIANO
Notary Public - State of Florida
Commission # HH 071298
My Comm. Expires Feb 14, 2025

[Notary Seal]

Notary Public, State of Florida

Janine Terracciano
Printed name of notary



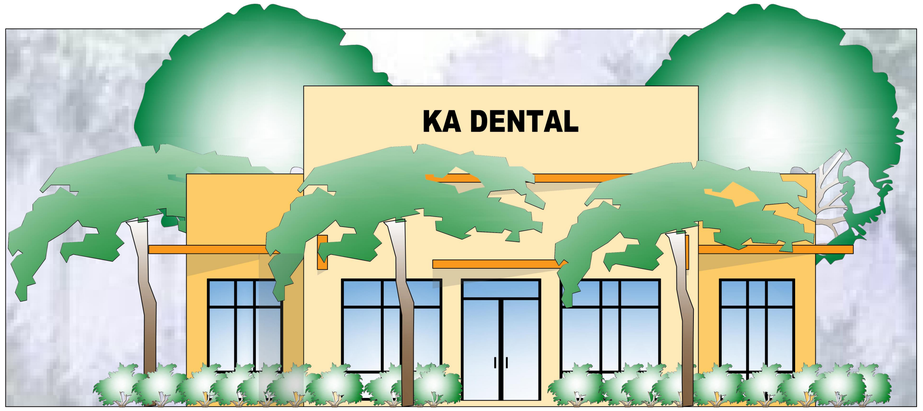

FRONT ELEVATION (WEST)

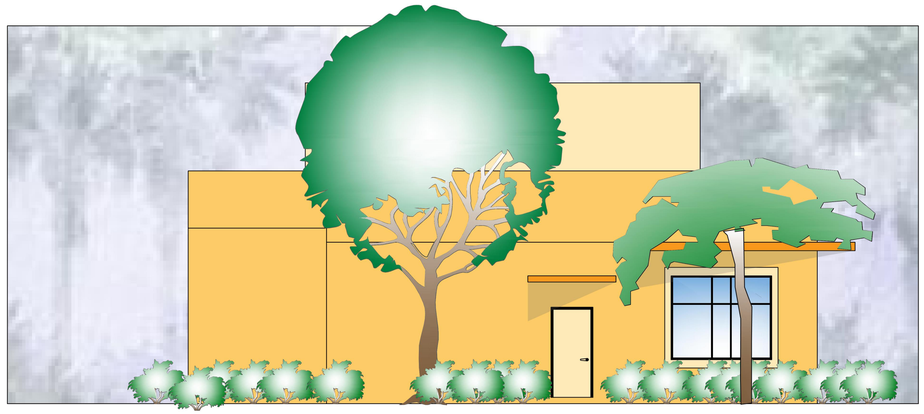

REAR ELEVATION (EAST)

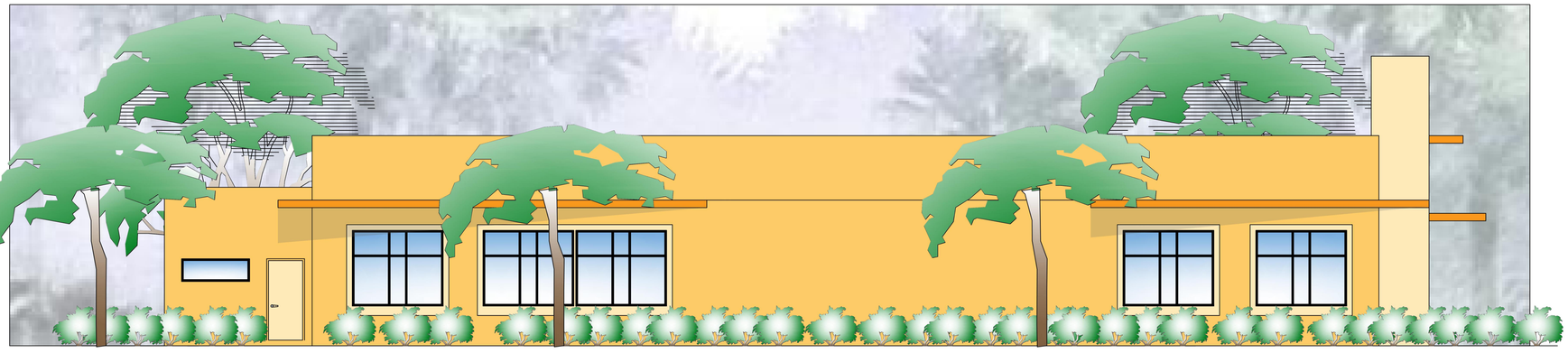

LEFT ELEVATION (NORTH)

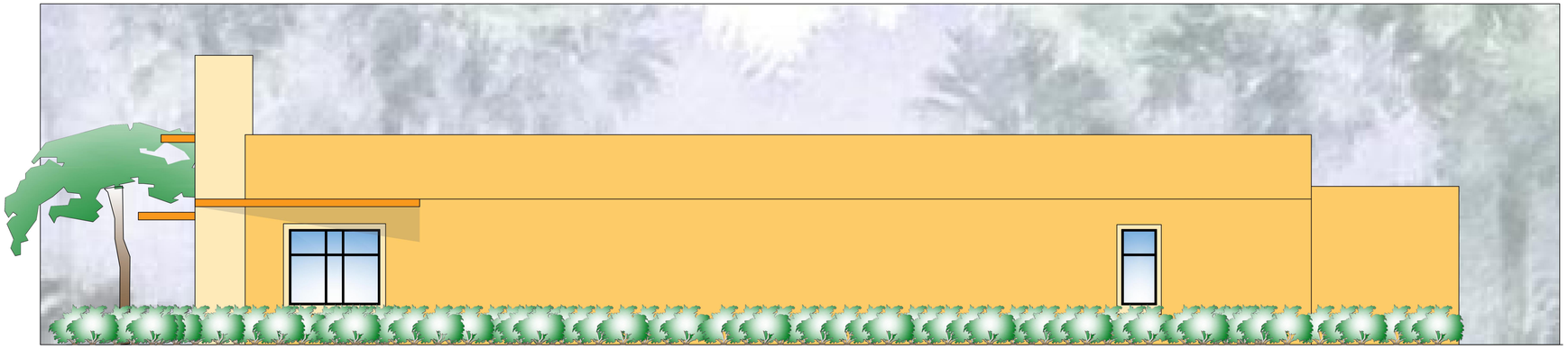

RIGHT ELEVATION (SOUTH)


KA DENTAL


DO NOT
TER

Village of Palm Springs

Patel Dental Office - 1962 S Military Trail



Village Parcels
County Parcels
70-42-44-12-00-000-5380

0 46.25 92.5 185 277.5 370
Feet

DATE: 4/25/2022

N

Village of Palm Springs

Patel Dental Office - 1962 S Military Trail

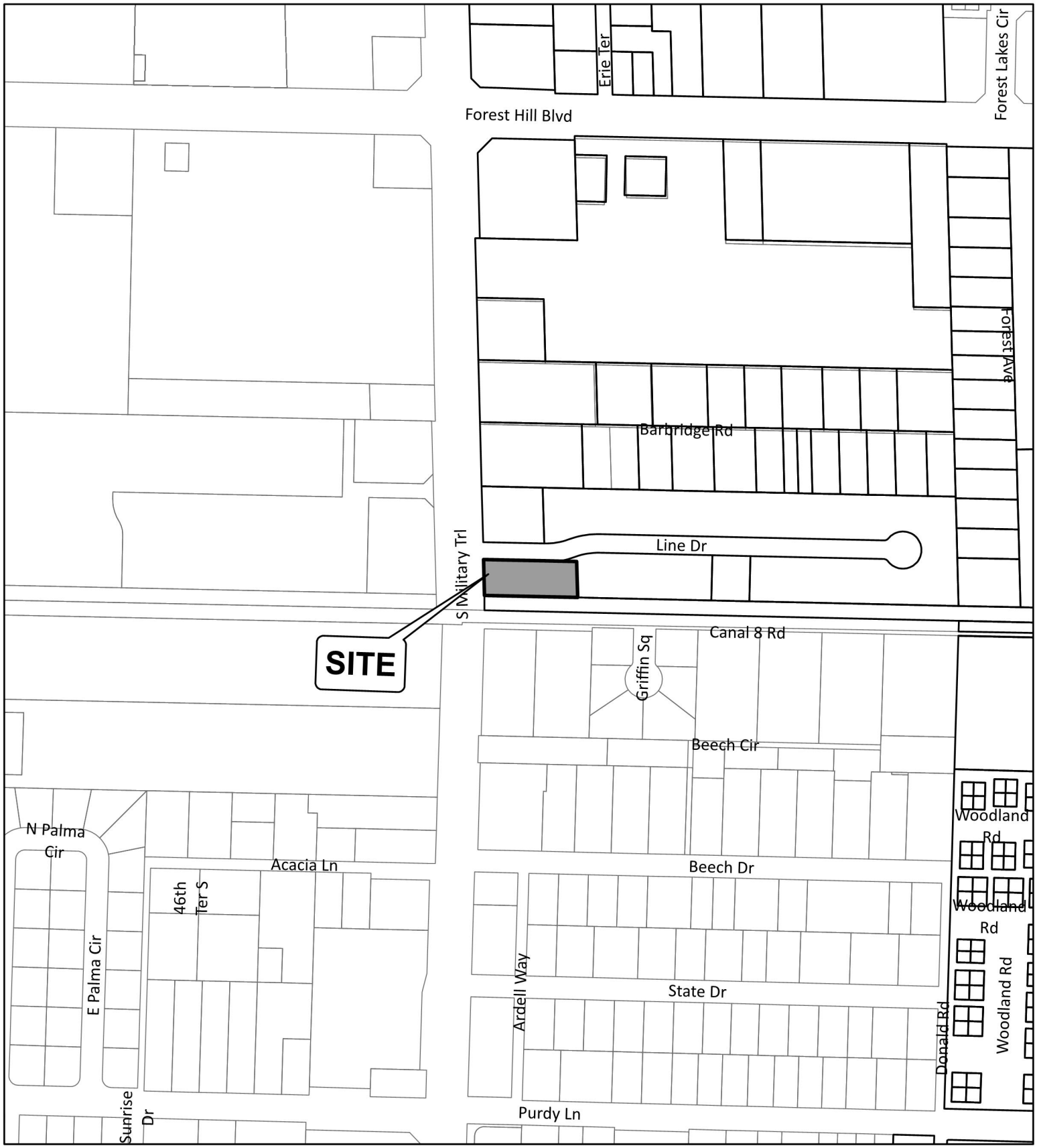

Village Parcels
County Parcels
70-42-44-12-00-000-5380

0 155 310 620 930 1,240 Feet

DATE: 4/25/2022

N