AGENDA
PLANNING AND ZONING BOARD
VILLAGE HALL COUNCIL CHAMBERS
226 CYPRESS LANE ■ PALM SPRINGS, FL 33461
NOVEMBER 22, 2022
6:30 PM

Johnnie Tieche, Chairman
Richard Hughes, Vice-Chairman
Ralph Lashells, Board Member
Vacant, Jr. Alternate
Peter Braun, Board Member
Kim Gehrman, Board Member
Larry Saingilus, Sr. Alternate

ADMINISTRATION

Planning, Zoning, and Building Director, Iramis Cabrera
Village Attorney, Susan Garrett
Deputy Village Clerk, Jane R. Worth

Persons who need an accommodation to attend or participate in this meeting should contact the office of the Village Clerk at (561) 584-8200 at least three (3) business days before the event to request such assistance.

CALL TO ORDER

ROLL CALL

Chairman Johnnie Tieche
Vice Chairman Richard Hughes
Ralph Lashells
Peter Braun
Kim Gehrman
Larry Saingilus, Sr. Alternate
Vacancy, Jr. Alternate
PZ&B Director, Iramis Cabrera
Village Attorney Susan Garrett
Deputy Village Clerk Jane R. Worth

NOTE: CLERK TO ASCERTAIN IF THERE ARE ANY *EX PARTE* COMMUNICATIONS TO BE DISCLOSED DURING QUASI JUDICIAL DISCUSSIONS. CLERK TO SWEAR

IN WITNESSES FOR TESTIMONY.

ADDITIONS, DELETIONS OR MODIFICATIONS TO THE AGENDA

APPROVAL OF MINUTES

2. Approval of September 13, 2022, Planning and Zoning Advisory Board Minutes
   Staff: Jane Worth, Deputy Village Clerk

3. Approval of October 11, 2022, Planning and Zoning Advisory Board Minutes
   Staff: Jane Worth, Deputy Village Clerk

ORDER OF BUSINESS

REGULAR AGENDA

PUBLIC HEARINGS

4. **Resolution No. 2022-48 - Preliminary Plat - Belmont - 1591 Kirk Road** - Motion for approval submitted by, Ms. Martha H. Carter, agent for D. R. Horton, Inc. ("Applicant"), for a preliminary plat to subdivide a multifamily property to delineate 42 individual townhouse lots, consistent with the site plan approved by the Village Council (Resolution No. 2022-08 - June 9, 2022), for the property located at 1591 Kirk Road. There is no direct fiscal impact from the preliminary plat request.
   Staff: Iramis Cabrera, PZB Director

5. **Ordinance No. 2022- 13 - Village Code Amendment - Chapter 34 - Land Development - Article VI, Land Use, Section 34-890 - Home Occupations and Article IV, Signs, Section 34-328 - Wall, Under Canopy, and Window Signs:** Motion to recommend approval to Village Council of Ordinance No. 2022-13 with amendments to the Home Occupation code, Section 34-890 to mitigate for adverse impacts to residential neighborhoods from a zoning perspective and Section 34-328 to amend the sign regulations to allow and regulate signage for home-based businesses.
   Staff: Iramis Cabrera, PZB Director

6. **Light Industrial Planned Development Site Plan (SPR22-16) - Oxygen Development - 1525 South Congress Avenue:** Motion for approval of an expansion of the Oxygen Development site to include a 150,780 square-foot warehouse building, submitted by Mr. Marty R. A. Minor, agent for the owner, Oxygen Holdings LLC.
   Staff: Iramis Cabrera, PZB Director

OTHER BUSINESS

ADJOURNMENT

NEXT MEETING

DECEMBER 13, 2022 @ 6:30 PM
VILLAGE COUNCIL CHAMBERS

If a person decides to appeal any decision made by the Council concerning any considered matter, they will need a record of the proceeding. For such purposes, they may need to ensure that a verbatim record of the proceedings is available. The recording includes the testimony and evidence upon which the appeal is to be based.

Village of Palm Springs

Title VI/Nondiscrimination Policy

I. Policy Statement:

The Village of Palm Springs values diversity and welcomes input from all interested parties, regardless of cultural identity, background, or income level. Moreover, the Village believes the best programs and services result from careful consideration of the needs of all its communities and when those communities are involved in the decision-making process. The Village does not tolerate discrimination in any of its programs, services, or activities. Pursuant to Title VI of the Civil Rights Act of 1964 and other federal and state authorities, the Village will not exclude from participation in, deny the benefits of, or subject to discrimination anyone on the grounds of race, color, national origin, sex, age, disability, religion, or family status.

II. Persons with Disabilities:

Section 504 of the Rehabilitation Act of 1973, the Americans with Disabilities Act of 1990 (ADA) and related federal and state laws and regulations forbid discrimination against those who have disabilities. These laws require federal-aid recipients and other government entities to take affirmative steps to reasonably accommodate those with disabilities and ensure that their needs are equitably represented.

The Village will make every effort to ensure that its facilities, programs, services, and activities are accessible to those with disabilities. The Village will also make every effort to ensure that its advisory committees, public involvement activities and all other programs, services and activities include representation by communities with disabilities and disability service groups.

The Village encourages the public to report any facility, program, service, or activity that appears inaccessible to those who are disabled. Also, the Village will provide reasonable accommodation to individuals with disabilities who wish to participate in public involvement events or who require special assistance to access facilities, programs, services, or activities. Because providing reasonable accommodation may require outside assistance, the Village asks that requests be made at least three (3) business days prior to the need for accommodation. Questions, concerns, comments, or requests for accommodation should be made to the Village ADA Officer:

Name: Ashley Saingilus
Address: 226 Cypress Lane, Palm Springs, FL 33461
Email: asaingilus@vpsfl.org
Phone: (561)584-8200 Ext. 8419

III. Complaint Procedures:

The Village has established a discrimination complaint procedure and will take prompt and reasonable action to investigate and eliminate discrimination when found. Any person who believes that he or she has been subjected to discrimination based upon race, color, national origin, sex, religion, age, disability or family status in any Village program, service or activity may file a complaint with the Village Title VI/Nondiscrimination Coordinator:

Name: Janette Piedra, Human Resources Manager
Address: 226 Cypress Lane, Palm Springs, FL 33461
Email: jpiedra@vpsfl.org
Phone: (561)584-8200 Ext. 8421

Placeholder – September 13, 2022, Planning and Zoning Advisory Board minutes to be provided prior to the meeting.

Placeholder – October 11, 2022, Planning and Zoning Advisory Board minutes to be provided prior to the meeting.

Village of Palm Springs

Staff Report

AGENDA DATE: November 9, 2022

DEPARTMENT: Planning, Zoning & Building

ITEM #4: Proposed Resolution No. 2022-48 - Preliminary Plat - 1591 Kirk Road

SUMMARY: Ms. Martha H. Carter, agent for D.R. Horton, Inc., applicant, has filed a preliminary plat to re-plat Lot 2, Lutheran Church - Kirk Road, as recorded in Plat Book 117, pages 181 and 182, Public Records of Palm Beach County, Florida and lying in Section 12, township 44 south, range 42 east, Village of Palm Springs, Palm Beach County, Florida. The applicant is proposing to subdivide the multifamily property to delineate 42 individual townhouse lots for fee-simple ownership, consistent with the site plan approved by the Village council (Resolution No. 2022-08 - June 9, 2022).

The Village Surveyor, Craven Thompson & Associates, Inc., has reviewed the proposed plat and has determined that it complies with Chapter 177, F.S. - Platting Regulations.

The Village Council will consider the proposed preliminary plat at the December 8, 2022 meeting.

A final plat will be presented to the Village Council for consideration if approved. The recording of the plat is required prior to the issuance of a certificate of occupancy for a new residence.

FISCAL IMPACT:
There is no direct fiscal impact from the proposed plat.

ATTACHMENTS:
1. Resolution No. 2022-48 - Preliminary Plat - 1591 Kirk Road - Belmont
2. Preliminary Plat - Belmont - 1591 Kirk Road
3. Letter of Compliance with Florida Statutes - 1591 Kirk Road
4. Approved Site Plan
5. Aerial Map and Location Map

RESOLUTION NO. 2022-48

A RESOLUTION OF THE VILLAGE COUNCIL FOR THE VILLAGE OF PALM SPRINGS, FLORIDA, APPROVING/DENYING A PRELIMINARY PLAT TO REPLAT LOT 2, LUTHERAN CHURCH – KIRK ROAD AND SUBDIVIDE A MULTI-FAMILY PROPERTY TO DELINEATE 42 INDIVIDUAL TOWNHOME LOTS FOR FEE-SIMPLE OWNERSHIP, CONSISTENT WITH THE SITE PLAN, TOTALING 5.07 ACRES SUBMITTED BY MS. MARTHA H. CARTER, AGENT FOR D. R. HORTON, INC. ("APPLICANT"), FOR THE PROPERTY LOCATED AT 1591 KIRK ROAD AND PROVIDING FOR AN EFFECTIVE DATE.

WHEREAS, Ms. Martha, agent for D. R. Horton, Inc. ("Applicant") is proposing to subdivide the multifamily property to delineate 42 individual townhome lots for fee-simple ownership, consistent with the site plan approved by the Village Council on June 9, 2022, Resolution 2022-08; and

WHEREAS, the recommendation of the Planning and Zoning Board has been forwarded to the Village Council for final consideration; and

WHEREAS, the Village Council has heard this matter in public session; has considered the presentation and other evidence presented by the Applicant; has received and considered the recommendations of the Village Staff and Planning and Zoning Board, and has otherwise been fully informed regarding this matter; and

WHEREAS, the preliminary plat conforms to the applicable requirements of Chapter 34 of the Village Code.

NOW, THEREFORE, BE IT RESOLVED BY THE VILLAGE COUNCIL OF THE VILLAGE OF PALM SPRINGS, FLORIDA, AS FOLLOWS:

Section 1. The Village Council of the Village of Palm Springs, Florida, having received and considered the request of the Applicant to subdivide the multifamily property to delineate 42 individual townhouse lots for fee-simple ownership, at 1591 Kirk Road; and the same having been heard in the Regular Session of December 8, 2022, having been otherwise fully apprised of the premises herein, and having determined that the preliminary

plat conforms to the applicable requirements of Chapter 34 of the Village Code; hereby approves the preliminary plat, which is incorporated herein by reference.

Section 2. This Resolution shall take effect immediately upon adoption.

Council Member _____ offered the foregoing resolution. Council Member _____ seconded the motion, and upon being put to a vote, the vote was as follows:

	Aye	Nay	Absent
BEVERLY SMITH, MAYOR	☐	☐	☐
DOUG GUNTHER, VICE MAYOR	☐	☐	☐
JONI BRINKMAN, MAYOR PRO TEM	☐	☐	☐
PATTI WALLER, COUNCIL MEMBER	☐	☐	☐
GARY READY, COUNCIL MEMBER	☐	☐	☐

The Mayor thereupon declared this Resolution duly passed and adopted this _____ day of _____ 2022.

VILLAGE OF PALM SPRINGS, FLORIDA

BY: _____

BEVERLY SMITH, MAYOR

ATTEST:

BY: _____

KIMBERLY M. WYNN, VILLAGE CLERK

REVIEWED FOR FORM AND LEGAL SUFFICIENCY

BY: _____

GLEN J. TORCIVIA, VILLAGE ATTORNEY

BELMONT

BEING A REPLAT OF LOT 2, LUTHERAN CHURCH - KIRK ROAD, AS RECORDED IN PLAT BOOK 117, PAGES 181 AND 182, PUBLIC RECORDS OF PALM BEACH COUNTY, FLORIDA AND LYING IN SECTION 12, TOWNSHIP 44 SOUTH, RANGE 42 EAST, VILLAGE OF PALM SPRINGS, PALM BEACH COUNTY, FLORIDA,

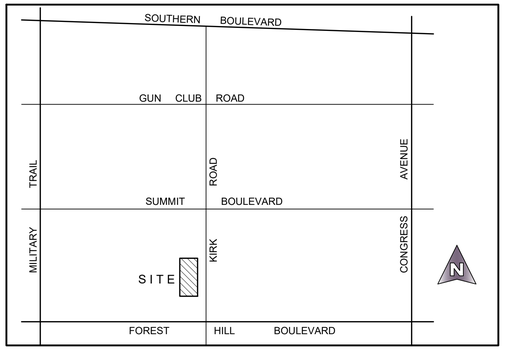

LOCATION MAP
(NOT TO SCALE)

DEDICATION AND RESERVATION

KNOW ALL MEN BY THESE PRESENTS THAT D.R. HORTON, INC., A DELAWARE CORPORATION, AUTHORIZED TO DO BUSINESS IN FLORIDA, OWNER OF THE LAND SHOWN HEREON AS BELMONT, BEING A REPLAT OF LOT 2, LUTHERAN CHURCH - KIRK ROAD, AS RECORDED IN PLAT BOOK 117, PAGES 181 AND 182, PUBLIC RECORDS OF PALM BEACH COUNTY, FLORIDA AND LYING IN SECTION 12, TOWNSHIP 44 SOUTH, RANGE 42 EAST, PALM BEACH COUNTY, FLORIDA, BEING MORE PARTICULARLY DESCRIBED AS FOLLOWS:

LOT 2, LUTHERAN CHURCH - KIRK ROAD, AS RECORDED IN PLAT BOOK 117, PAGES 181 AND 182, PUBLIC RECORDS OF PALM BEACH COUNTY, FLORIDA.

CONTAINING: 220,689 SQUARE FEET OR 5.066 ACRES MORE OR LESS.

HAS CAUSED THE SAME TO BE SURVEYED AND PLATTED AS SHOWN HEREON AND DOES HEREBY DEDICATE AS FOLOWS:

EASEMENTS:

UTILITY EASEMENTS - THE UTILITY EASEMENTS, AS SHOWN HEREON, ARE HEREBY DEDICATED IN PERPETUITY FOR THE CONSTRUCTION AND MAINTENANCE OF UTILITY FACILITIES, INCLUDING CABLE TELEVISIONS SYSTEMS. THE INSTALLATION OF CABLE TELEVISION SYSTEMS SHALL NOT INTERFERE WITH THE CONSTRUCTION AND MAINTENANCE OF OTHER UTILITIES.

DRAINAGE EASEMENTS - THE DRAINAGE EASEMENTS, AS SHOWN HEREON, ARE HEREBY DEDICATED IN PERPETUITY FOR DRAINAGE PURPOSES TO THE BELMONT NEIGHBORHOOD ASSOCIATION, INC., ITS SUCCESSORS AND ASSIGNS, AND ARE THE PERPETUAL MAINTENANCE OBLIGATION OF SAID ASSOCIATION, WITHOUT RECOURSE TO THE VILLAGE OF PALM SPRINGS.

LIFT STATION EASEMENT - THE LIFT STATION AS SHOWN HEREON IS HEREBY DEDICATED IN PERPETUITY TO THE PALM BEACH COUNTY WATER UTILITIES DEPARTMENT, ITS SUCCESSORS AND ASSIGNS, FOR LIFT STATION AND RELATED PURPOSES.

THE PALM BEACH COUNTY UTILITY EASEMENTS IDENTIFIED ON THE PLAT HEREON ARE EXCLUSIVE EASEMENTS AND ARE HEREBY DEDICATED IN PERPETUITY TO PALM BEACH COUNTY, ITS SUCCESSORS AND ASSIGNS, FOR THE INSTALLATION, OPERATION, MAINTENANCE, REPAIR, EXPANSION AND REPLACEMENT OF POTABLE WATER PIPELINES, RAW WATER PIPELINES, WASTEWATER PIPELINES, RECLAIMED WATER PIPELINES, AND RELATED APPURTENANCES. THE MAINTENANCE OF THE LAND UNDERLYING THESE EASEMENTS SHALL BE A PERPETUAL OBLIGATION OF THE PROPERTY OWNER. IF OTHERWISE APPROVED BY PALM BEACH COUNTY, NO BUILDINGS, STRUCTURES, IMPROVEMENTS, TREES, WALLS OR FENCES SHALL BE INSTALLED WITHIN THESE EASEMENTS WITHOUT THE PRIOR WRITTEN APPROVAL OF THE PALM BEACH COUNTY WATER UTILITIES DEPARTMENT, ITS SUCCESSORS AND ASSIGNS.

TRACTS:

TRACT "OS-1", AS SHOWN HEREON, IS HEREBY DEDICATED IN PERPETUITY FOR OPEN SPACE, LANDSCAPING, BUFFER AND DRAINAGE PURPOSES TO THE BELMONT NEIGHBORHOOD ASSOCIATION, INC., ITS SUCCESSORS AND ASSIGNS, AND IS THE PERPETUAL MAINTENANCE OBLIGATION OF SAID ASSOCIATION, WITHOUT RECOURSE TO THE VILLAGE OF PALM SPRINGS.

THE PRIVATE STREETS AS SHOWN HEREON, DENOTED AS TRACT "S-1", ARE HEREBY DEDICATED TO THE BELMONT NEIGHBORHOOD ASSOCIATION, INC., ITS SUCCESSORS AND ASSIGNS FOR THE PURPOSE OF PROVIDING INGRESS-EGRESS, AND ARE THE PERPETUAL MAINTENANCE OBLIGATION OF SAID ASSOCIATION WITHOUT RECOURSE TO THE VILLAGE OF PALM SPRINGS, SAID STREETS MAY ALSO BE USED FOR CONSTRUCTION AND MAINTENANCE OF UTILITIES INCLUDING WATER, SEWER, IRRIGATION, AND DRAINAGE LINES.

ALL TRACTS FOR PRIVATE STREET PURPOSES, AND DRIVEWAY/PARKING TRACTS, AS SHOWN HEREON, ARE HEREBY SUBJECT TO AN OVERLYING NON-EXCLUSIVE EASEMENT DEDICATED IN PERPETUITY TO THE PUBLIC FOR THE INSTALLATION, OPERATION, MAINTENANCE, REPAIR, EXPANSION AND REPLACEMENT OF UTILITIES, BOTH PUBLIC AND PRIVATE, INCLUDING, BUT NOT LIMITED TO STORMWATER FACILITIES, POTABLE WATER PIPELINES, RAW WATER PIPELINES, WASTEWATER PIPELINES, RECLAIMED WATER PIPELINES, ELECTRIC POWER LINES, TELECOMMUNICATION LINES, CABLE TELEVISION LINES, GAS LINES, AND RELATED APPURTENANCES. NO BUILDINGS, STRUCTURES, IMPROVEMENTS, TREES, WALLS OR FENCES SHALL BE INSTALLED WITHIN THESE TRACTS WITHOUT PRIOR WRITTEN APPROVAL OF THE PALM BEACH COUNTY WATER UTILITIES DEPARTMENT, ITS SUCCESSORS AND ASSIGNS.

WATER MANAGEMENT TRACTS "D-1" AND "D-2", AS SHOWN HEREON, ARE HEREBY DEDICATED IN PERPETUITY FOR WATER MANAGEMENT AND DRAINAGE PURPOSES TO THE BELMONT NEIGHBORHOOD ASSOCIATION, INC., ITS SUCCESSORS AND ASSIGNS AND IS THE PERPETUAL MAINTENANCE OBLIGATION OF SAID ASSOCIATION, WITHOUT RECOURSE TO THE VILLAGE OF PALM SPRINGS.

TRACT "P-1", AS SHOWN HEREON, IS HEREBY DEDICATED TO THE BELMONT NEIGHBORHOOD ASSOCIATION, INC., ITS SUCCESSORS AND ASSIGNS, AS A PARKING TRACT SERVING ABUTTING LOTS OR TRACTS FOR INGRESS, EGRESS, UTILITIES, DRAINAGE, AND OTHER PURPOSES NOT INCONSISTENT WITH THIS RESERVATION, AND IS THE PERPETUAL MAINTENANCE OBLIGATION OF SAID ASSOCIATION, ITS SUCCESSORS AND ASSIGNS, WITHOUT RECOURSE TO THE VILLAGE OF PALM SPRINGS.

TRACT "R-1", AS SHOWN HEREON, IS HEREBY DEDICATED IN PERPETUITY FOR RECREATIONAL PURPOSES TO THE BELMONT NEIGHBORHOOD ASSOCIATION, INC. ITS SUCCESSORS AND ASSIGNS AND IS THE PERPETUAL MAINTENANCE OBLIGATION OF SAID ASSOCIATION, WITHOUT RECOURSE TO THE VILLAGE OF PALM SPRINGS.

IN WITNESS WHEREOF, THE ABOVE NAMED CORPORATION, HAS CAUSED THESE PRESENTS TO BE SIGNED BY ITS DIVISION PRESIDENT, AND ITS CORPORATE SEAL TO BE AFFIXED HERETO BY AND WITH THE AUTHORITY OF ITS BOARD OF DIRECTORS, THIS _____ DAY OF_____, 2022.

D.R. HORTON, INC.,
A DELAWARE CORPORATION
LICENSED TO DO BUSINESS IN FLORIDA

BY: _____
RAFAEL J. ROCA, DIVISION PRESIDENT

WITNESS: _____

PRINTED NAME: _____

WITNESS: _____

PRINTED NAME: _____

ACKNOWLEDGMENT

STATE OF FLORIDA)
COUNTY OF BROWARD)

THE FOREGOING INSTRUMENT WAS ACKNOWLEDGED BEFORE ME BY MEANS OF ☐ PHYSICAL PRESENCE OR ☐ ONLINE NOTARIZATION, THIS _____ DAY OF _____, 2022, BY RAFAEL J. ROCA AS DIVISION PRESIDENT FOR D.R. HORTON, INC., ON BEHALF OF THE DELAWARE CORPORATION, LICENSED TO DO BUSINESS IN FLORIDA, WHO IS ☐ PERSONALLY KNOWN TO ME, OR HAS PRODUCED _____ AS IDENTIFICATION.

MY COMMISSION EXPIRES: _____

NOTARY PUBLIC
STATE OF FLORIDA
COMMISSION NO. _____

ACCEPTANCE OF RESERVATIONS

STATE OF FLORIDA)
COUNTY OF PALM BEACH)

THE BELMONT NEIGHBORHOOD ASSOCIATION, INC., HEREBY ACCEPTS THE DEDICATIONS OR RESERVATIONS TO SAID ASSOCIATION AS STATED AND SHOWN HEREON, AND HEREBY ACCEPTS ITS MAINTENANCE OBLIGATIONS FOR SAME AS STATED HEREON, DATED THIS _____ DAY OF _____, 2022.

THE BELMONT
NEIGHBORHOOD ASSOCIATION, INC.
A FLORIDA CORPORATION NOT-FOR-PROFIT

WITNESS:_____

BY: _____
GARY BRUNK, PRESIDENT

PRINTED NAME: _____

WITNESS: _____

PRINTED NAME: _____

ACKNOWLEDGEMENT

STATE OF FLORIDA)
COUNTY OF PALM BEACH)

THE FOREGOING INSTRUMENT WAS ACKNOWLEDGED BEFORE ME BY MEANS OF ☐ PHYSICAL PRESENCE OR ☐ ONLINE NOTARIZATION, THIS _____ DAY OF _____, 2022, BY GARY BRUNK AS PRESIDENT FOR THE BELMONT NEIGHBORHOOD ASSOCIATION, INC., ON BEHALF OF THE FLORIDA CORPORATION NOT-FOR-PROFIT, WHO IS ☐ PERSONALLY KNOWN TO ME, OR HAS PRODUCED _____ AS IDENTIFICATION.

MY COMMISSION EXPIRES: _____

NOTARY PUBLIC
STATE OF FLORIDA
COMMISSION NO. _____

TITLE CERTIFICATION

STATE OF FLORIDA
COUNTY OF PALM BEACH

I, _____, A DULY LICENSED ATTORNEY IN THE STATE OF FLORIDA DO HEREBY CERTIFY THAT I HAVE EXAMINED THE TITLE TO THE HEREON DESCRIBED PROPERTY; THAT I FIND THE TITLE TO THE PROPERTY IS VESTED IN D.R. HORTON, INC., A DELAWARE CORPORATION, AUTHORIZED TO DO BUSINESS IN FLORIDA; THAT THE CURRENT TAXES HAVE BEEN PAID; AND THAT ALL PALM BEACH COUNTY SPECIAL ASSESSMENT ITEMS, AND ALL OTHER ITEMS HELD AGAINST SAID LANDS HAVE BEEN SATISFIED; THAT THERE ARE NO MORTGAGES OF RECORD AND THAT THERE ARE ENCUMBRANCES OF RECORD BUT THOSE ENCUMBRANCES DO NOT PROHIBIT THE CREATION OF THE SUBDIVISION DEPICTED BY THIS PLAT.

DATED _____

_____
ATTORNEY-AT-LAW, LICENSED IN FLORIDA

VILLAGE OF PALM SPRINGS APPROVAL

VILLAGE OF PALM SPRINGS
COUNTY OF PALM BEACH

THIS PLAT IS HEREBY APPROVED FOR RECORD, THIS _____ DAY OF _____, 2022.

BY: _____
BEV SMITH - VILLAGE MAYOR

ATTEST: _____
KIMBERLY M. WYNN - VILLAGE CLERK

AREA TABULATION

TRACT "OS-1"	43,118 SQUARE FEET OR 0.990 ACRES
TRACT "R-1"	20,909 SQUARE FEET OF 0.480 ACRES
TRACT "S-1"	46,107 SQUARE FEET OR 1.058 ACRES
TRACT "D-1"	9,158 SQUARE FEET OR 0.210 ACRES
TRACT "D-2"	18,884 SQUARE FEET OR 0.434 ACRES
TRACT "P-1 "	2,103 SQUARE FEET OR 0.048 ACRES
LOTS 1 - 42 (SEE MAP SHEETS FOR INDIVIDUAL LOTS)	80,410 SQUARE FEET OR 1.846 ACRES
TOTAL AREA	220,689 SQUARE FEET OR 5.066 ACRES

REVIEWING SURVEYOR'S APPROVAL

THIS PLAT HAS BEEN REVIEWED IN ACCORDANCE WITH CHAPTER 177.081(1) F.S., TO DETERMINE THAT ALL DATA REQUIRED BY CHAPTER 177 F.S. IS SHOWN. WHILE RANDOM CHECKS OF GEOMETRIC DATA REFLECT ITS ADEQUACY, NO REPRESENTATION OF THE FULL VERIFICATION OF SAID DATA IS MADE.

DATE: _____

_____
RICHARD D. PRYCE, RLS/PSM
PROFESSIONAL SURVEYOR AND MAPPER
LICENSE NO. 4038
STATE OF FLORIDA

SURVEYOR AND MAPPER'S CERTIFICATE:

THIS IS TO CERTIFY THAT THE PLAT SHOWN HEREON IS A TRUE AND CORRECT REPRESENTATION OF A SURVEY MADE UNDER MY RESPONSIBLE DIRECTION AND SUPERVISION; THAT SAID SURVEY IS ACCURATE TO THE BEST OF MY KNOWLEDGE AND BELIEF; THAT PERMANENT REFERENCE MONUMENTS (P.R.M.'S) HAVE BEEN PLACED AS REQUIRED BY LAW AND THAT PERMANENT CONTROL POINTS (P.C.P.'S) AND MONUMENTS ACCORDING TO SECTION 177.091(9) F.S., WILL BE SET UNDER THE GUARANTEES POSTED WITH THE VILLAGE OF PALM SPRINGS FOR THE REQUIRED IMPROVEMENTS; AND FURTHER, THAT THE SURVEY DATA COMPLIES WITH ALL THE REQUIREMENTS OF CHAPTER 177, FLORIDA STATUES, AS AMENDED, AND THE ORDINANCES OF THE VILLAGE OF PALM SPRINGS, FLORIDA.

DATED: _____

_____
CRAIG S. PUSEY, P.S.M.
PROFESSIONAL SURVEYOR AND MAPPER
LICENSE NO. 5019
STATE OF FLORIDA

PREPARING SURVEYOR & MAPPER'S STATEMENT

THIS INSTRUMENT WAS PREPARED BY CRAIG S. PUSEY, P.S.M. OF MICHAEL B. SCHORAH AND ASSOCIATES, INC., 1850 FOREST HILL BOULEVARD., SUITE 206, WEST PALM BEACH, FLORIDA, 33406.

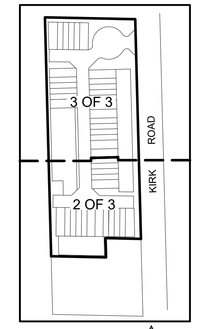

KEY MAP
NOT TO SCALE
N

COUNTY OF PALM BEACH)
) SS
STATE OF FLORIDA)

THIS PLAT WAS FILED FOR RECORD AT _____,M. THIS _____ DAY OF _____, 2022, AND DULY RECORDED IN PLAT BOOK NO. _____, ON PAGE _____ THRU _____

JOSEPH ABRUZZO,
CLERK OF THE CIRCUIT COURT AND COMPTROLLER

BY: _____, D.C.

CLERK OF THE CIRCUIT COURT AND COMPTROLLER

LEGEND

P.C.P.	=	PERMANENT CONTROL POINT
P.R.M.	=	PERMANENT REFERENCE MONUMENT
O.R.B.	=	OFFICIAL RECORD BOOK
P.B.	=	PLAT BOOK
D.B.	=	DEED BOOK
P.B.C.	=	PALM BEACH COUNTY
R/W	=	RIGHT OF WAY
℄	=	CENTERLINE
U.E.	=	UTILITY EASEMENT
D.E.	=	DRAINAGE EASEMENT
N	=	NORTHING, WHEN USED WITH COORDINATES
E	=	EASTING, WHEN USED WITH COORDINATES
◉	=	SET NAIL AND ALUMINUM DISK, STAMPED P.C.P. L.B. 2438
■	=	SET 4"x4"x24" C.M. WITH ALUMINUM DISK, STAMPED P.R.M. L.B. 2438
◎	=	SET MAG NAIL AND BRASS WASHER, STAMPED P.R.M. L.B. 2438
FD.	=	FOUND
C.M.	=	CONCRETE MONUMENT
F.P.L.	=	FLORIDA POWER AND LIGHT
P.B.C.U.E.	=	PALM BEACH COUNTY UTILITY EASEMENT
P.S.M.	=	PROFESSIONAL SURVEYOR AND MAPPER
NO.	=	NUMBER
✚	=	DENOTES SECTION CORNER (FOUND PALM BEACH COUNTY DISK IN CONCRETE)
⊸	=	DENOTES 1/4 SECTION CORNER (NOT FOUND)

SURVEYOR'S NOTES:

1. NO BUILDING OR ANY KIND OF CONSTRUCTION OR TREES OR SHRUBS SHALL BE PLACED ON ANY EASEMENT WITHOUT WRITTEN CONSENT OF ALL EASEMENT BENEFICIARIES AND ALL APPLICABLE COUNTY APPROVALS OR PERMITS AS REQUIRED FOR SUCH ENCROACHMENTS. THERE SHALL BE NO ABOVE GROUND ENCROACHMENTS WHERE UTILITY EASEMENTS AND LAKE MAINTENANCE EASEMENTS COINCIDE.

2. IN THOSE CASES WHERE EASEMENTS OF DIFFERENT TYPES CROSS OR OTHERWISE COINCIDE, DRAINAGE EASEMENTS, WATER MANAGEMENT EASEMENTS AND WATER MANAGEMENT ACCESS EASEMENT SHALL HAVE FIRST PRIORITY, UTILITY EASEMENTS SHALL HAVE SECOND PRIORITY, ACCESS EASEMENTS SHALL HAVE THIRD PRIORITY, AND ALL OTHER EASEMENTS SHALL SUBORDINATE TO THESE WITH THEIR PRIORITIES BEING DETERMINED BY USE RIGHTS GRANTED.

3. NOTICE: THIS PLAT, AS RECORDED IN ITS GRAPHIC FORM, IS THE OFFICIAL DEPICTION OF THE SUBDIVIDED LANDS DESCRIBED HEREIN, AND WILL IN NO CIRCUMSTANCES BE SUPPLANTED IN AUTHORITY BY ANY OTHER GRAPHIC OR DIGITAL FORM OF THE PLAT. THERE MAY BE ADDITIONAL RESTRICTIONS THAT ARE NOT RECORDED ON THIS PLAT THAT MAY BE FOUND IN THE PUBLIC RECORDS OF THIS COUNTY.

4. BEARINGS AS SHOWN HEREON ARE BASED ON THE EAST LINE OF THE SOUTHEAST QUARTER OF SECTION 12, TOWNSHIP 44 SOUTH, RANGE 42 EAST, PALM BEACH COUNTY, FLORIDA, HAVING A GRID BEARING OF SOUTH 01°29'10" EAST, WHICH IS RELATIVE TO THE NORTH AMERICAN DATUM (N.A.D.) 83, 1990 ADJUSTMENT.

5. ALL LINES INTERSECTING CIRCULAR CURVES ARE NON-RADIAL UNLESS OTHERWISE NOTED.

6. BUILDINGS SETBACK LINES SHALL BE AS REQUIRED BY CURRENT VILLAGE OF PALM SPRINGS ZONING REGULATIONS.

D.R. HORTON, INC.

D.R. HORTON, INC.
NOTARY

BELMONT
NEIGHBORHOOD ASSOCIATION, INC.

BELMONT
NEIGHBORHOOD ASSOCIATION, INC.
NOTARY

VILLAGE OF PALM SPRINGS

PROFESSIONAL SURVEYOR
AND MAPPER

REVIEWING SURVEYOR

SHEET 1 OF 3

MICHAEL B. SCHORAH
& ASSOCIATES, INC.
1850 FOREST HILL BLVD., SUITE 206
WEST PALM BEACH, FLORIDA 33406
EB# 2438 TEL. (561) 968-0080 FAX. (561) 642-9726 LB# 2438

BELMONT

BELMONT

BEING A REPLAT OF LOT 2, LUTHERAN CHURCH - KIRK ROAD, AS RECORDED IN PLAT BOOK 117, PAGES 181 AND 182, PUBLIC RECORDS OF PALM BEACH COUNTY, FLORIDA AND LYING IN SECTION 12, TOWNSHIP 44 SOUTH, RANGE 42 EAST, VILLAGE OF PALM SPRINGS, PALM BEACH COUNTY, FLORIDA,

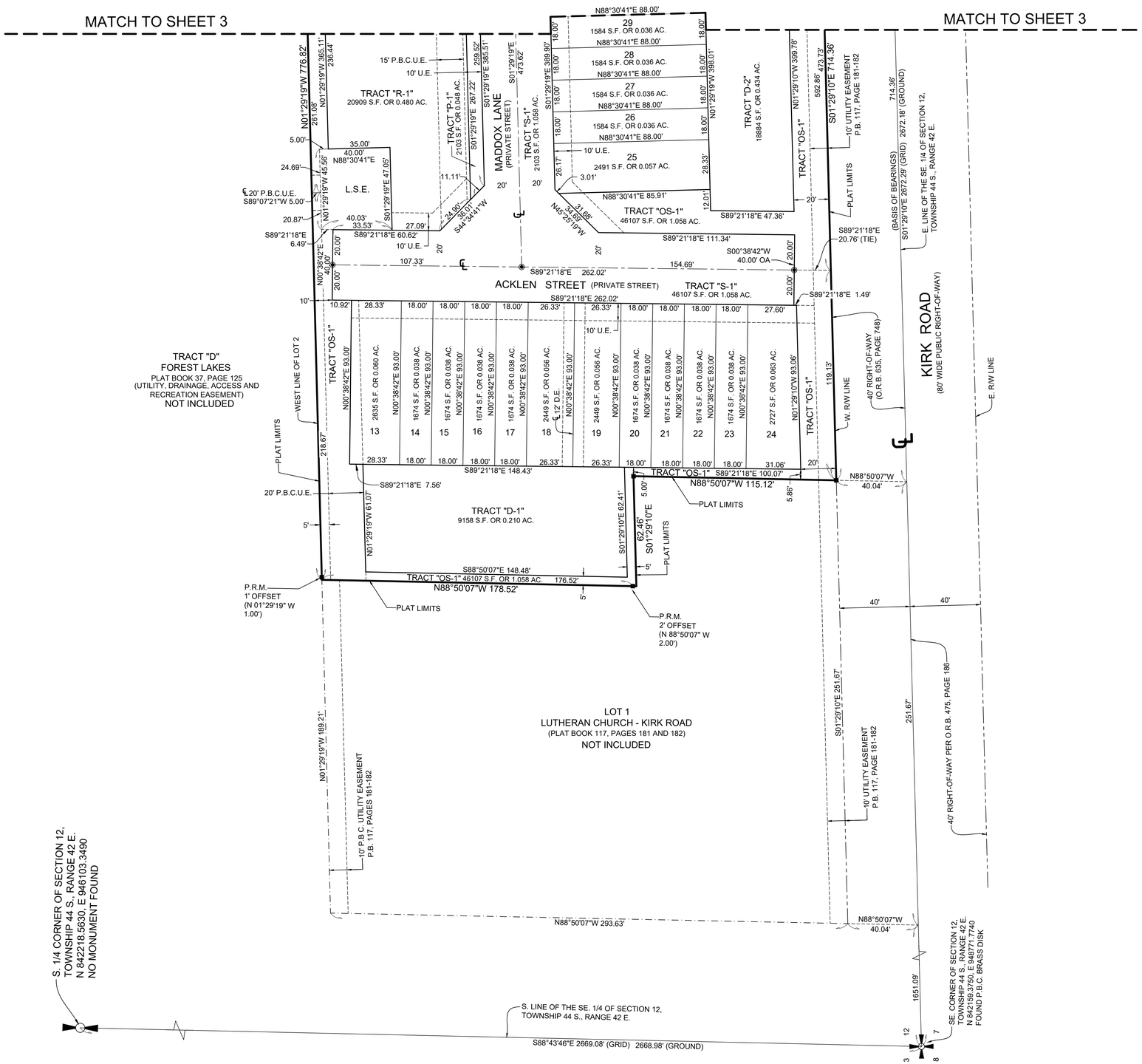

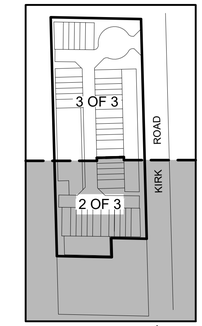

KEY MAP
NOT TO SCALE

COUNTY OF PALM BEACH)
) SS
STATE OF FLORIDA)

THIS PLAT WAS FILED FOR RECORD AT _____,M. THIS _____ DAY OF _____, 2022, AND DULY RECORDED IN PLAT BOOK NO. _____, ON PAGE _____ THRU _____

JOSEPH ABRUZZO,
CLERK OF THE CIRCUIT COURT AND COMPTROLLER

BY: _____, D.C.

PREPARING SURVEYOR & MAPPER'S STATEMENT

THIS INSTRUMENT WAS PREPARED BY CRAIG S. PUSEY, P.S.M. OF MICHAEL B. SCHORAH AND ASSOCIATES, INC., 1850 FOREST HILL BOULEVARD., SUITE 206, WEST PALM BEACH, FLORIDA, 33406.

LEGEND

P.C.P.	=	PERMANENT CONTROL POINT
P.R.M.	=	PERMANENT REFERENCE MONUMENT
O.R.B.	=	OFFICIAL RECORD BOOK
P.B.	=	PLAT BOOK
D.B.	=	DEED BOOK
P.B.C.	=	PALM BEACH COUNTY
R/W	=	RIGHT OF WAY
℄	=	CENTERLINE
U.E.	=	UTILITY EASEMENT
D.E.	=	DRAINAGE EASEMENT
N	=	NORTHING, WHEN USED WITH COORDINATES
E	=	EASTING, WHEN USED WITH COORDINATES
◉	=	SET NAIL AND ALUMINUM DISK, STAMPED P.C.P. L.B. 2438
■	=	SET 4"x4"x24" C.M. WITH ALUMINUM DISK, STAMPED P.R.M. L.B. 2438
◎	=	SET MAG NAIL AND BRASS WASHER, STAMPED P.R.M. L.B. 2438
FD.	=	FOUND
C.M.	=	CONCRETE MONUMENT
F.P.L.	=	FLORIDA POWER AND LIGHT
P.B.C.U.E.	=	PALM BEACH COUNTY UTILITY EASEMENT
P.S.M.	=	PROFESSIONAL SURVEYOR AND MAPPER
NO.	=	NUMBER
	=	DENOTES SECTION CORNER (FOUND PALM BEACH COUNTY DISK IN CONCRETE)
	=	DENOTES 1/4 SECTION CORNER (NOT FOUND)

COORDINATE NOTE:
STATE PLANE COORDINATES SHOWN ARE GRID DATUM, NAD 83 1990 ADJUSTMENT, FLORIDA EAST ZONE, COORDINATE SYSTEM 1983 STATE PLANE, TRANSVERSE MERCATOR PROJECTION
LINEAR UNIT = US SURVEY FEET
ALL DISTANCES ARE GROUND
SCALE FACTOR = 1.000039295
GROUND DISTANCE X SCALE FACTOR = GRID DISTANCE
BEARINGS AS SHOWN HEREON ARE GRID DATUM, NAD 83 1990 ADJUSTMENT, FLORIDA EAST ZONE.

GRAPHIC SCALE
0 15 30 60 90
(IN FEET)
1 INCH = 30 FT.

SHEET 2 OF 3

MICHAEL B. SCHORAH & ASSOCIATES, INC.
1850 FOREST HILL BLVD., SUITE 206
WEST PALM BEACH, FLORIDA 33406
EB# 2438 TEL. (561) 968-0080 FAX. (561) 642-9726 LB# 2438

BELMONT

BELMONT

BEING A REPLAT OF LOT 2, LUTHERAN CHURCH - KIRK ROAD, AS RECORDED IN PLAT BOOK 117, PAGES 181 AND 182, PUBLIC RECORDS OF PALM BEACH COUNTY, FLORIDA AND LYING IN SECTION 12, TOWNSHIP 44 SOUTH, RANGE 42 EAST, VILLAGE OF PALM SPRINGS, PALM BEACH COUNTY, FLORIDA,

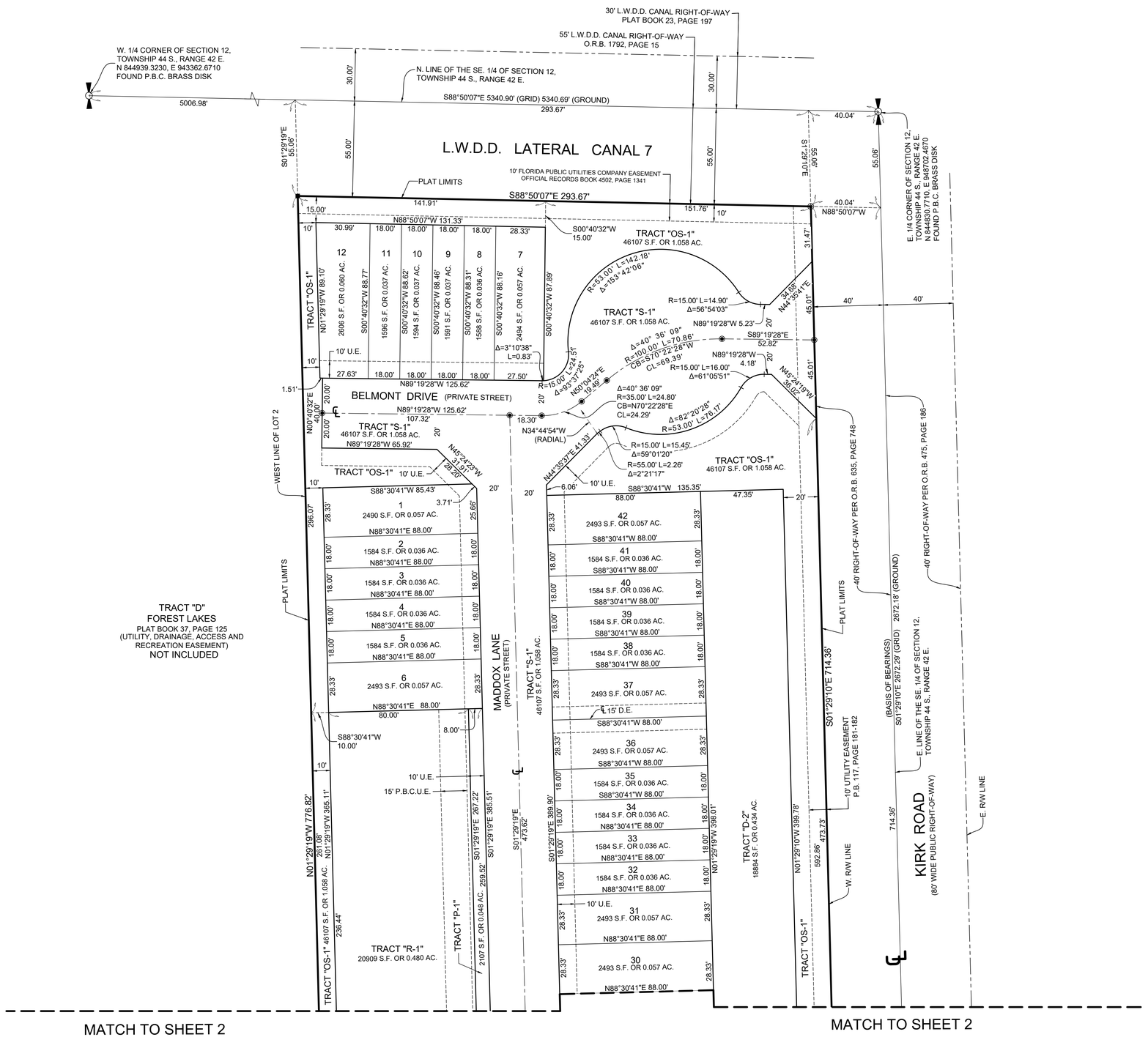

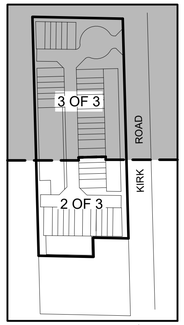

KEY MAP
NOT TO SCALE

COUNTY OF PALM BEACH)
) SS
STATE OF FLORIDA)

THIS PLAT WAS FILED FOR RECORD AT _____,M. THIS _____ DAY OF _____, 2022, AND DULY RECORDED IN PLAT BOOK NO. _____, ON PAGE _____ THRU _____

JOSEPH ABRUZZO,
CLERK OF THE CIRCUIT COURT AND COMPTROLLER

BY: _____, D.C.

PREPARING SURVEYOR & MAPPER'S STATEMENT

THIS INSTRUMENT WAS PREPARED BY CRAIG S. PUSEY, P.S.M. OF MICHAEL B. SCHORAH AND ASSOCIATES, INC., 1850 FOREST HILL BOULEVARD., SUITE 206, WEST PALM BEACH, FLORIDA, 33406.

LEGEND

P.C.P.	=	PERMANENT CONTROL POINT
P.R.M.	=	PERMANENT REFERENCE MONUMENT
O.R.B.	=	OFFICIAL RECORD BOOK
P.B.	=	PLAT BOOK
D.B.	=	DEED BOOK
P.B.C.	=	PALM BEACH COUNTY
R/W	=	RIGHT OF WAY
℄	=	CENTERLINE
U.E.	=	UTILITY EASEMENT
D.E.	=	DRAINAGE EASEMENT
N	=	NORTHING, WHEN USED WITH COORDINATES
E	=	EASTING, WHEN USED WITH COORDINATES
◉	=	SET NAIL AND ALUMINUM DISK, STAMPED P.C.P. L.B. 2438
■	=	SET 4"x4"x24" C.M. WITH ALUMINUM DISK, STAMPED P.R.M. L.B. 2438
◎	=	SET MAG NAIL AND BRASS WASHER, STAMPED P.R.M. L.B. 2438
FD.	=	FOUND
C.M.	=	CONCRETE MONUMENT
F.P.L.	=	FLORIDA POWER AND LIGHT
P.B.C.U.E.	=	PALM BEACH COUNTY UTILITY EASEMENT
P.S.M.	=	PROFESSIONAL SURVEYOR AND MAPPER
NO.	=	NUMBER
	=	DENOTES SECTION CORNER (FOUND PALM BEACH COUNTY DISK IN CONCRETE)
	=	DENOTES 1/4 SECTION CORNER (NOT FOUND)

COORDINATE NOTE:

STATE PLANE COORDINATES SHOWN ARE GRID DATUM, NAD 83 1990
ADJUSTMENT, FLORIDA EAST ZONE, COORDINATE SYSTEM 1983 STATE PLANE, TRANSVERSE MERCATOR PROJECTION
LINEAR UNIT = US SURVEY FEET
ALL DISTANCES ARE GROUND
SCALE FACTOR = 1.000039295
GROUND DISTANCE X SCALE FACTOR = GRID DISTANCE
BEARINGS AS SHOWN HEREON ARE GRID DATUM, NAD 83 1990
ADJUSTMENT, FLORIDA EAST ZONE.

GRAPHIC SCALE
0 15 30 60 90
(IN FEET)
1 INCH = 30 FT.

SHEET 3 OF 3

MICHAEL B. SCHORAH & ASSOCIATES, INC.
1850 FOREST HILL BLVD. SUITE 206
WEST PALM BEACH, FLORIDA 33406
EB# 2438 TEL. (561) 968-0080 FAX. (561) 642-9726 LB# 2438

BELMONT

Plat Checklist/Comments - Florida Statutes

Village of Palm Springs

"BELMONT" Plat

THIRD REVIEW

10/23/2022

CHAPTER 177

PLATTING (ss. 177.011-177.151) CHECKLIST

☐ **177.041 Boundary survey and title opinion or property information report required.** Every plat or replat of a subdivision submitted to the approving agency of the local governing body must be accompanied by:

☒ 1) A boundary survey of the platted lands. However, a new boundary survey for a replat is required only when the replat affects any boundary of the previously platted property or when improvements which may affect the boundary of the previously platted property have been made on the lands to be replatted. The boundary survey must be performed and prepared under the responsible direction and supervision of a professional surveyor and mapper preceding the initial submittal of the plat to the local governing body. This subsection does not restrict a legal entity from employing one professional surveyor and mapper to perform and prepare the boundary survey and another professional surveyor and mapper to prepare the plat.

Comments: **COMPLIES**

☐ (2) A title opinion of an attorney at law licensed in Florida or a property information report showing that record title to the land as described and shown on the plat is in the name of the person, persons, corporation, or entity executing the dedication. The title opinion or property information report must also show all mortgages not satisfied or released of record nor otherwise terminated by law.

Comments: **COMPLIES**

☐ **177.051 Name and replat of subdivision**

☒ (1) Every subdivision shall be given a name by which it shall be legally known. For the purpose of this section, that name is the "primary name." The primary name shall not be the same or in any way so similar to any name appearing on any recorded plat in the same county as to confuse the records or to mislead the public as to the identity of the subdivision, except when the subdivision is further divided as an additional unit or section by the same developer or the developer's successors in title. In that case, the additional unit, section, or phase shall be given the primary name followed by the unit, section, or phase number. Words such as "the," "replat," or "a" may not be used as the first word of the primary name. Every subdivision's name shall have legible lettering of the same size and type, including the words "section," "unit," or "phase." If the word "replat" is not part of the primary name, then it may be of a different size and type. The primary name of the subdivision shall be shown in the dedication and shall coincide exactly with the subdivision name.

Comments: **COMPLIES**

☒ (2) Any change in a plat, except as provided in s. 177.141, shall be labeled a "replat," and a replat must conform with this part. After the effective date of this act, the terms "amended plat," "revised plat," "corrected plat," and "resubdivision" may not be used to describe the process by which a plat is changed.

Comments: **COMPLIES**

☒ **177.061 Qualification and statement required.** Every plat offered for recording pursuant to the provisions of this part must be prepared by a professional surveyor and mapper. The plat must be signed and sealed by that professional surveyor and mapper, who must state on the plat that the plat was prepared under his or her direction and supervision and that the plat complies with all of the survey requirements of this part. Every plat must also contain the printed name and registration number of the professional surveyor and mapper directly below the statement required by this section, along with the printed name, address, and certificate of authorization number of the legal entity, if any. A professional surveyor and mapper practicing independently of a legal entity must include his or her address.

Comments: **COMPLIES**

☐ **177.071 Approval of plat by governing bodies**

☐ (1) Before a plat is offered for recording, it must be approved by the appropriate governing body, and evidence of such approval must be placed on the plat. If not approved, the governing body must return the plat to the professional surveyor and mapper or the legal entity offering the plat for recordation. For the purposes of this part:

Comments: **PENDING**

☒ (a) When the plat to be submitted for approval is located wholly within the boundaries of a municipality, the governing body of the municipality has exclusive jurisdiction to approve the plat.

Comments: **COMPLIES**

☒ (b) When a plat lies wholly within the unincorporated areas of a county, the governing body of the county has exclusive jurisdiction to approve the plat.

Comments: **N/A**

☒ (c) When a plat lies within the boundaries of more than one governing body, two plats must be prepared and each governing body has exclusive jurisdiction to approve the plat within its boundaries, unless the governing bodies having said jurisdiction agree that one plat is mutually acceptable.

Comments: **N/A**

☒ (2) Any provision in a county charter, or in an ordinance of any charter county or consolidated government chartered under s. 6(e), Art. VIII of the State Constitution, which provision is inconsistent with anything contained in this section shall prevail in such charter county or consolidated government to the extent of any such inconsistency.

Comments: **N/A**

☐ **177.081 Dedication and approval**

☐ (1) Prior to approval by the appropriate governing body, the plat shall be reviewed for conformity to this chapter by a professional surveyor and mapper either employed by or under contract to the local governing body, the costs of which shall be borne by the legal entity offering the plat for recordation, and evidence of such review must be placed on such plat.

Comments: **PENDING**

☒ (2) Every plat of a subdivision filed for record must contain a dedication by the owner or owners of record. The dedication must be executed by all persons, corporations, or entities whose signature would be required to convey record fee simple title to the lands being dedicated in the same manner in which deeds are required to be executed. All mortgagees having a record interest in the lands subdivided shall execute, in the same manner in which deeds are required to be executed, either the dedication contained on the plat or a separate instrument joining in and ratifying the plat and all dedications and reservations thereon.

Comments: **PENDING SIGNATURES ON ORIGINAL MYLAR**

☒ (3) When a tract or parcel of land has been subdivided and a plat thereof bearing the dedication executed by the owners of record and mortgagees having a record interest in the lands subdivided, and when the approval of the governing body has been secured and recorded in compliance with this part, all streets, alleys, easements, rights-of-way, and public areas shown on such plat, unless otherwise stated, shall be deemed to have been dedicated to the public for the uses and purposes thereon stated. However, nothing herein shall be construed as creating an obligation upon any governing body to perform any act of construction or maintenance within such dedicated areas except when the obligation is voluntarily assumed by the governing body.

Comments: **COMPLIES**

☐ **177.085 Platted streets; reversionary clauses**

☒ (1) When any owner of land subdivides the land and dedicates streets, other roadways, alleys or similar strips on the map or plat, and the dedication contains a provision that the reversionary interest in the street, roadway, alley or other similar strip is reserved unto the dedicator or his or her heirs, successors, assigns, or legal representative, or similar language, and thereafter conveys abutting lots or tracts, the conveyance shall carry the reversionary interest in the abutting street to the centerline or other appropriate boundary, unless the owner clearly provides otherwise in the conveyance.

Comments: **N/A**

☒ (2) As to all plats of subdivided lots heretofore recorded in the public records of each county, the holder of any interest in any reversionary rights in streets in such plats, other than the owners of abutting lots, shall have 1 year from July 1, 1972, to institute suit in a court of competent jurisdiction in this state to establish or enforce the right, and failure to institute the action within the time shall bar any right, title or interest, and all right of forfeiture or reversion shall thereupon cease and determine, and become unenforceable.

Comments: **N/A**

☒ **177.086 Installation of cul-de-sacs.** In the event a municipality or county installs a cul-de-sac on a street or road under its jurisdiction and thereby discontinues use of any existing street or road right-of-way, such discontinuance shall not operate to abandon or vacate the unused right-of-way unless the governing body of the municipality or county adopts a resolution or ordinance, as appropriate, vacating the unused right-of-way.

Comments: **N/A**

☐ **177.091 Plats made for recording.** Every plat of a subdivision offered for recording shall conform to the following:

(1) It must be:

☐ a) An original drawing made with black permanent drawing ink; or

Comments: **PENDING REVIEW OF MYLAR**

☐ (b) A nonadhered scaled print on a stable base film made by photographic processes from a film scribing tested for residual hypo testing solution to assure permanency. Marginal lines, standard certificates and approval forms shall be printed on the plat with a permanent black drawing ink. A print or photographic copy of the original drawing must be submitted with the original drawing.

Comments: **PENDING REVIEW OF MYLAR**

☐ 2) The size of each sheet shall be determined by the local governing body and shall be drawn with a marginal line, or printed when permitted by local ordinance, completely around each sheet and placed so as to leave at least a $^1/_2$-inch margin on each of three sides and a 3-inch margin on the left side of the plat for binding purposes.

Comments: **COMPLIES**

☒ (3) When more than one sheet must be used to accurately portray the lands subdivided, an index or key map must be included and each sheet must show the particular number of that sheet and the total number of sheets included, as well as clearly labeled match lines to show where other sheets match or adjoin.

Comments: **COMPLIES**

☒ (4) In all cases, the letter size and scale used shall be of sufficient size to show all detail. The scale shall be both stated and graphically illustrated by a graphic scale drawn on every sheet showing any portion of the lands subdivided.

Comments: **COMPLIES**

☒ (5) The name of the plat shall be shown in bold legible letters, as stated in s. 177.051. The name of the subdivision shall be shown on each sheet included. The name of the professional surveyor and mapper or legal entity, along with the street and mailing address, must be shown on each sheet included.

Comments: **COMPLIES**

☒ (6) A prominent "north arrow" shall be drawn on every sheet included showing any portion of the lands subdivided. The bearing or azimuth reference shall be clearly stated on the face of the plat in the notes or legend, and, in all cases, the bearings used shall be referenced to some well established and monumented line.

Comments: **COMPLIES**

☐ (7) Permanent reference monuments must be placed at each corner or change in direction on the boundary of the lands being platted and may not be more than 1,400 feet apart. Where such corners are in an inaccessible place, "P.R.M.s" shall be set on a nearby offset within the boundary of the plat and such offset shall be so noted on the plat. Where corners are found to coincide with a previously set "P.R.M.," the Florida registration number of the professional surveyor and mapper in responsible charge or the certificate of authorization number of the legal entity on the previously set "P.R.M." shall be shown on the new plat or, if unnumbered, shall so state. Permanent reference monuments shall be set before the recording of the plat. The "P.R.M.s" shall be shown on the plat by an appropriate symbol or designation.

Comments: **COMPLIES**

☒ (8) Permanent control points shall be set on the centerline of the right-of-way at the intersection and terminus of all streets, at each change of direction, and no more than 1,000 feet apart. Such "P.C.P.s" shall be shown on the plat by an appropriate symbol or designation. In those counties or municipalities that do not require subdivision improvements and do not accept bonds or escrow accounts to construct improvements, "P.C.P.s" may be set prior to the recording of the plat and must be set within 1 year of the date the plat was recorded. In the counties or municipalities that require subdivision improvements and have the means of insuring the construction of said improvements, such as bonding requirements, "P.C.P.s" must be set prior to the expiration of the bond or other surety. If the professional surveyor and mapper or legal entity of record is no longer in practice or is not available due to relocation, or when the contractual relationship between

the subdivider and professional surveyor and mapper or legal entity has been terminated, the subdivider shall contract with a professional surveyor and mapper or legal entity in good standing to place the "P.C.P.s" within the time allotted.

Comments: **COMPLIES**

☐ (9) Monuments shall be set at all lot corners, points of intersection, and changes of direction of lines within the subdivision which do not require a "P.R.M." or a "P.C.P."; however, a monument need not be set if a monument already exists at such corner, point, or change of direction or when a monument cannot be set due to a physical obstruction. In those counties or municipalities that do not require subdivision improvements and do not accept bonds or escrow accounts to construct improvements, monuments may be set prior to the recording of the plat and must be set at the lot corners before the transfer of the lot. In those counties or municipalities that require subdivision improvements and have the means of ensuring the construction of those improvements, such as bonding requirements, monuments shall be set prior to the expiration of the bond or other surety. If the professional surveyor and mapper or legal entity of record is no longer in practice or is not available due to relocation, or when the contractual relationship between the subdivider and professional surveyor and mapper or legal entity has been terminated, the subdivider shall contract with a professional surveyor and mapper or legal entity in good standing who shall be allowed to place the monuments within the time allotted.

Comments: **COMPLIES**

☒ (10) The section, township, and range shall appear immediately under the name of the plat on each sheet included, along with the name of the city, town, village, county, and state in which the land being platted is situated.

Comments: **COMPLIES**

☒ (11) Each plat shall show a description of the lands subdivided, and the description shall be the same in the title certification. The description must be so complete that from it, without reference to the plat, the starting point and boundary can be determined.

Comments: **COMPLIES**

☐ (12) The dedications and approvals required by ss. 177.071 and 177.081 must be shown.

Comments: **COMPLIES**

☐ (13) The circuit court clerk's certificate and the professional surveyor and mapper's seal and statement required by s. 177.061 shall be shown.

Comments: **COMPLIES**

☒ (14) All section lines and quarter section lines occurring within the subdivision shall be indicated by lines drawn upon the map or plat, with appropriate words and figures. If the description is by metes and bounds, all information called for, such as the point of commencement, course bearings and distances, and the point of beginning, shall be indicated. If the platted lands are in a land grant or are not included in the subdivision of government surveys, then the boundaries are to be defined by metes and bounds and courses.

Comments: **COMPLIES**

☒ (15) Location, width, and names of all streets, waterways, or other rights-of-way shall be shown, as applicable.

Comments: **COMPLIES**

☒ (16) Location and width of proposed easements and existing easements identified in the title opinion or property information report required by s. 177.041(2) must be shown on the plat or in the notes or legend, and their intended use

shall be clearly stated. Where easements are not coincident with property lines, they must be labeled with bearings and distances and tied to the principal lot, tract, or right-of-way.

Comments: **COMPLIES**

☒ (17) All contiguous properties shall be identified by subdivision title, plat book, and page, or, if unplatted, land shall be so designated. If the subdivision platted is a part or the whole of a previously recorded subdivision, sufficient ties shall be shown to controlling lines appearing on the earlier plat to permit an overlay to be made; the fact of its being a replat shall be stated as a subtitle under the name of the plat on each sheet included. The subtitle must state the name of the subdivision being replatted and the appropriate recording reference.

Comments: **COMPLIES**

☒ (18) All lots shall be numbered either by progressive numbers or, if in blocks, progressively numbered in each block, and the blocks progressively numbered or lettered, except that blocks in numbered additions bearing the same name may be numbered consecutively throughout the several additions.

Comments: **COMPLIES**

☒ (19) Sufficient survey data shall be shown to positively describe the bounds of every lot, block, street easement, and all other areas shown on the plat. When any lot or portion of the subdivision is bounded by an irregular line, the major portion of that lot or subdivision shall be enclosed by a witness line showing complete data, with distances along all lines extended beyond the enclosure to the irregular boundary shown with as much certainty as can be determined or as "more or less," if variable. Lot, block, street, and all other dimensions except to irregular boundaries, shall be shown to a minimum of hundredths of feet. All measurements shall refer to horizontal plane and in accordance with the definition of the U.S. Survey foot or meter adopted by the National Institute of Standards and Technology. All measurements shall use the $^{39.37}/_{12}$=3.28083333333 equation for conversion from a U.S. foot to meters.

Comments: **COMPLIES**

☒ (20) Curvilinear lot lines shall show the radii, arc distances, and central angles. Radial lines will be so designated. Direction of non-radial lines shall be indicated.

Comments: **COMPLIES**

☒ (21) Sufficient angles, bearings, or azimuth to show direction of all lines shall be shown, and all bearings, angles, or azimuth shall be shown to the nearest second of arc.

Comments: **COMPLIES**

☒ (22) The centerlines of all streets shall be shown as follows: noncurved lines: distances together with either angles, bearings, or azimuths; curved lines: arc distances, central angles, and radii, together with chord and chord bearing or azimuths.

Comments: **COMPLIES**

☒ (23) Park and recreation parcels as applicable shall be so designated.

Comments: **COMPLIES**

☒ (24) All interior excepted parcels as described in the description of the lands being subdivided shall be clearly indicated and labeled "Not a part of this plat."

Comments: **N/A**

☒ (25) The purpose of all areas dedicated must be clearly indicated or stated on the plat.

Comments: **COMPLIES**

☒ (26) When it is not possible to show line or curve data information on the map, a tabular form may be used. The tabular data must appear on the sheet to which it applies.

Comments: **N/A**

☒ (27) The plat shall include in a prominent place the following statements: "NOTICE: This plat, as recorded in its graphic form, is the official depiction of the subdivided lands described herein and will in no circumstances be supplanted in authority by any other graphic or digital form of the plat. There may be additional restrictions that are not recorded on this plat that may be found in the public records of this county."

Comments: **COMPLIES**

☒ (28) All platted utility easements shall provide that such easements shall also be easements for the construction, installation, maintenance, and operation of cable television services; provided, however, no such construction, installation, maintenance, and operation of cable television services shall interfere with the facilities and services of an electric, telephone, gas, or other public utility. In the event a cable television company damages the facilities of a public utility, it shall be solely responsible for the damages. This section shall not apply to those private easements granted to or obtained by a particular electric, telephone, gas, or other public utility. Such construction, installation, maintenance, and operation shall comply with the National Electrical Safety Code as adopted by the Florida Public Service Commission.

Comments: **COMPLIES**

☒ (29) A legend of all symbols and abbreviations shall be shown.

Comments: **COMPLIES**

☐ **177.101 Vacation and annulment of plats subdividing land**

☒ (1) Whenever it is discovered, after the plat has been recorded in the public records, that the developer has previously caused the lands embraced in the second plat to be differently subdivided under and by virtue of another plat of the same identical lands, and the first plat was also filed of public record at an earlier date, and no conveyances of lots by reference to the first plat so filed appears of record in such county, the governing body of the county is authorized and directed to and shall, by resolution, vacate and annul the first plat of such lands appearing of record upon the application of the developer of such lands under the first plat or upon application of the owners of all the lots shown and designated upon the second and subsequent plat of such lands, and the circuit court clerk of the county shall thereupon make proper notation of the annulment of such plat upon the face of such annulled plat.

Comments: **N/A**

☒ (2) Whenever it is discovered that after the filing of a plat subdividing a parcel of land located in the county, the developer of the lands therein and thereby subdivided did cause such lands embraced in said plat, or a part thereof, to be again and subsequently differently subdivided under another plat of the same and identical lands or a part thereof, which said second plat was also filed at a later date; and it is further made to appear to the governing body of the county that the filing and recording of the second plat would not materially affect the right of convenient access to lots previously conveyed under the first plat, the governing body of the county is authorized by resolution to vacate and annul so much of the first plat of such lands appearing of record as are included in the second plat, upon application of the owners and developer of such lands under the first plat or their successors, grantees, or assignees, and the circuit court clerk of the county shall thereupon make proper notation of the action of the governing body upon the face of the first plat. The approval of a replat by the governing body of a local government, which encompasses lands embraced in all or part of a prior plat filed of public

record shall, upon recordation of the replat, automatically and simultaneously vacate and annul all of the prior plat encompassed by the replat.

Comments: **N/A**

☒ (3) The governing bodies of the counties of the state may adopt resolutions vacating plats in whole or in part of subdivisions in said counties, returning the property covered by such plats either in whole or in part into acreage. Before such resolution of vacating any plat either in whole or in part shall be entered by the governing body of a county, it must be shown that the persons making application for said vacation own the fee simple title to the whole or that part of the tract covered by the plat sought to be vacated, and it must be further shown that the vacation by the governing body of the county will not affect the ownership or right of convenient access of persons owning other parts of the subdivision.

Comments: **N/A**

☒ (4) Persons making application for vacations of plats either in whole or in part shall give notice of their intention to apply to the governing body of the county to vacate said plat by publishing legal notice in a newspaper of general circulation in the county in which the tract or parcel of land is located, in not less than two weekly issues of said paper, and must attach to the petition for vacation the proof of such publication, together with certificates showing that all state and county taxes have been paid. For the purpose of the tax collector's certification that state, county, and municipal taxes have been paid, the taxes shall be deemed to have been paid if, in addition to any partial payment under s. 194.171, the owner of the platted lands sought to be vacated shall post a cash bond, approved by the tax collector of the county where the land is located and by the Department of Revenue, conditioned to pay the full amount of any judgment entered pursuant to s. 194.192 adverse to the person making partial payment, including all costs, interest, and penalties. The circuit court shall fix the amount of said bond by order, after considering the reasonable timeframe for such litigation and all other relevant factors; and a certified copy of such approval, order, and cash bond shall be attached to the application. If such tract or parcel of land is within the corporate limits of any incorporated city or town, the governing body of the county shall be furnished with a certified copy of a resolution of the town council or city commission, as the case may be, showing that it has already by suitable resolution vacated such plat or subdivision or such part thereof sought to be vacated.

Comments: **N/A**

☒ (5) Every such resolution by the governing body shall have the effect of vacating all streets and alleys which have not become highways necessary for use by the traveling public. Such vacation shall not become effective until a certified copy of such resolution has been filed in the offices of the circuit court clerk and duly recorded in the public records of said county.

Comments: **N/A**

☒ (6) All resolutions vacating plats by the governing body of a county prior to September 1, 1971, are hereby validated, ratified, and confirmed. Such resolutions shall have the same effect as if the plat had been vacated after September 1, 1971.

Comments: **N/A**

R:\Survey\2021\21-0043_Vill_Palm_Springs\Plat Reviews\BELMONT\PlatChecklistComments_3RD_Review.docx
RDP

Village of Palm Springs Development Review

DATE:	10/11/2022
DESCRIPTION :	Bella Sera - Townhomes (Belmont)
APPLICANT:	D.R. Horton (Contact Purchaser)
OWNER:	Finestra Holy Cross LLC
APPLICATION TYPE:	Planned Development
REQUEST:	Plat Review
LOCATION:	1591 Kirk Road, Palm Springs, Florida
STAFF REVIEW:	**APPROVAL LETTER WITH COMMENT/CONDITION AND RECOMMENDATIONS**

Plat Comments

Based on our review of the applicant's submittal dated 9/21/2022, the reviewer recommends the approval of the Plat.

This letter has been prepared by the following individual, in association with their consultants and subconsultants:

David Cowan Jr, P.E.
Chen Moore and Associates
Tel: 561.746.6900 x 1211
Email: dcowan@chenmoore.com

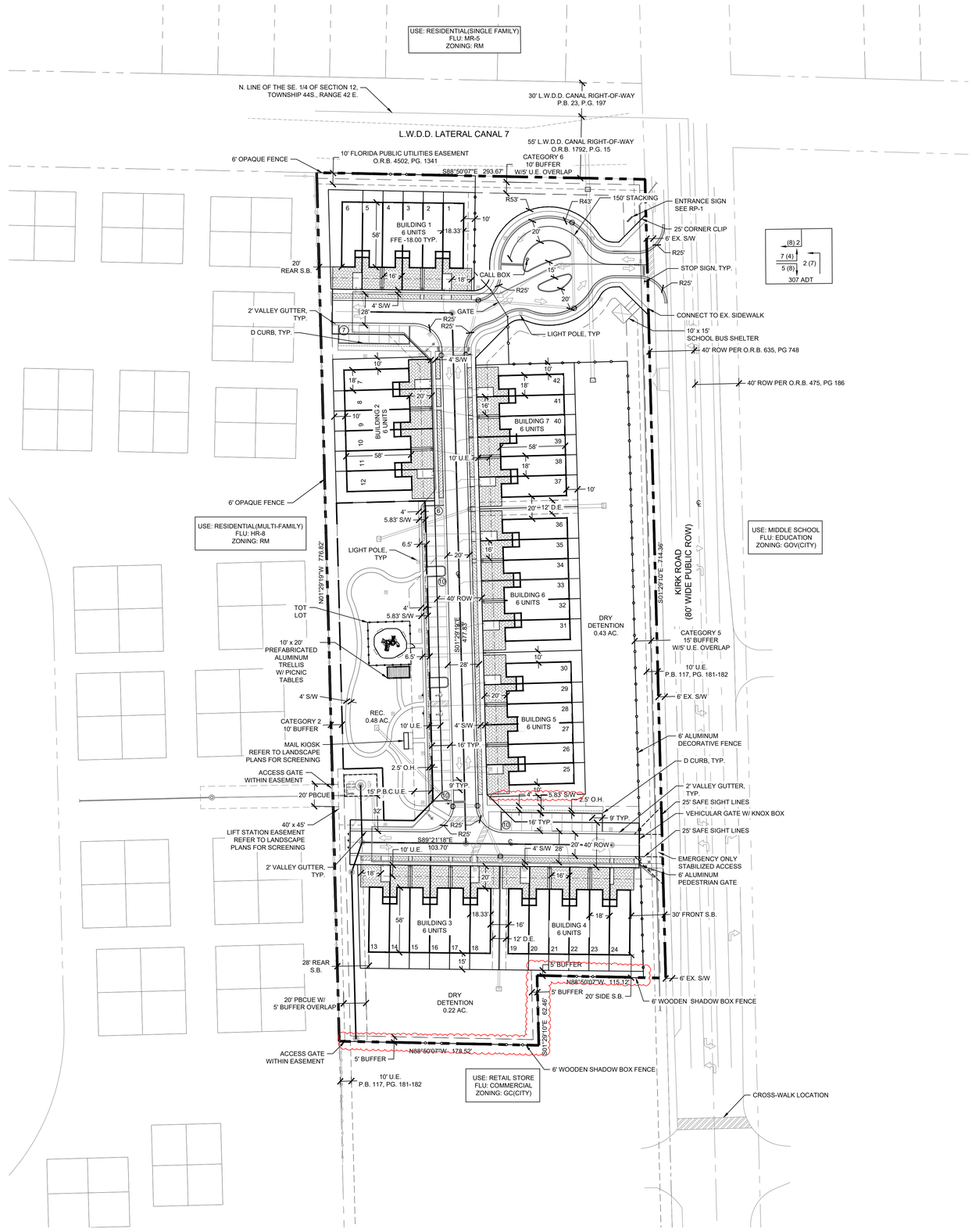

LOCATION MAP

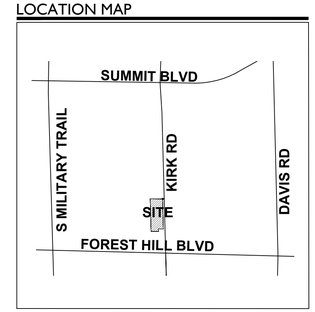

N

0 25 50 100

SCALE: 1" = 50'

SITE DATA

APPLICATION NAME	BELMONT
EXISTING LAND USE DESIGNATION (VILLAGE)	OTHER PUBLIC FACILITIES
PROPOSED LAND USE DESIGNATION (VILLAGE)	MEDIUM DENSITY RESIDENTIAL
EXISTING ZONING DISTRICT (VILLAGE)	RM
PROPOSED ZONING DISTRICT (VILLAGE)	RM/PUD
PCN	70-42-44-12-39-000-0020
EXISTING USE	CHURCH
PROPOSED USE	TOWNHOME RESIDENTIAL
GROSS SITE AREA	5.07 AC.
TOTAL PROPOSED UNITS (TOWNHOUSE)	42 D.U.
GROSS DENSITY	8.28 D.U./AC
OPEN SPACE REQUIRED	1.77 AC. (35%)
OPEN SPACE PROVIDED	2.07 AC. (41%)
PROPOSED PERVIOUS	2.63 AC. (52%)
PROPOSED IMPERVIOUS	2.44 AC. (48%)
COMMON AMENITY REQUIRED	0.35 AC.(20% OF OPEN SPACE)
COMMON AMENITY PROVIDED	0.48 AC.
DRY DETENTION AREA	0.65 AC. (13%)
TOTAL PARKING REQUIRED	132 SP.
RESIDENTIAL PARKING REQUIRED (2.5 SP./D.U.)	105 SP.
GUEST SPACES REQUIRED (25% OF REQ. SP.)	27 SP.
TOTAL PARKING PROVIDED	141 SP.
GARAGE SPACES	42 SP.
DRIVEWAY SPACES	56 SP.
GUEST SPACES	43 SP.
BUILDING HEIGHT	30' MAX
TRAFFIC ANALYSIS ZONE (TAZ)	294

NOTE:
1. REFER TO CIVIL PLANS FOR UTILITIES, GRADING, SIGNAGE AND PAVEMENT MARKING.
2. REFER TO PHOTOMETRIC PLANS FOR LIGHTING LOCATIONS.
3. STREETS ARE TO BE PRIVATELY DEDICATED AND MAINTAINED.

PROPERTY DEVELOPMENT REGULATIONS (TOWNHOUSE) SEC.34-1064(e)

ZONING DISTRICT (RM)	MAX BLDG COVER	MIN. SETBACKS			
		FRONT	SIDE	CORNER STREET	REAR
REQUIRED	40%	25'	20'	25'	20'
PROPOSED	18%	30'	20'	N/A	20'

NOTE: PROPERTY DEVELOPMENT REGULATIONS TAKEN FROM PERIMETER OF DEVELOPMENT. PER SEC. 34-1064.

WAIVER CHART

WAIVER SUBJECT	CODE SECTION	REQUIRED	PROPOSED	DEVIATION
MIN. LOT AREA	34-766(1)	385,500 SF / 8.85 AC.	220,849 SF / 5.07 AC.	-164,651 SF / - 3.78 AC.
PARKING DRIVE AISLE	34-1328	26'	20'	-6'

LEGEND

AC. = ACRES
℄ = CENTER LINE
D.E. = DRAINAGE EASEMENT
DRO = DEVELOPMENT REVIEW OFFICERS
D.U. = DWELLING UNITS
EX. = EXISTING
FLU = FUTURE LAND USE
M = MODEL UNIT
O.H.E. = OVERHANG EASEMENT
O.R.B. = OFFICIAL RECORD BOOK
O.S.T. = OPEN SPACE TRACT
P = POSTAL DELIVERY PARKING
P.B. = PLAT BOOK
PDR = PROPERTY DEVELOPMENT REGULATIONS
PG. = PAGE
R = RADIUS
R.O.W. = RIGHT-OF-WAY
S.B. = SETBACK
S/W = SIDEWALK
S.F. = SQUARE FEET
T.B.A. = TO BE ABANDONED
TYP = TYPICAL
TH = TOWNHOME
U.E. = UTILITY EASEMENT

WGI®
2035 Vista Parkway, West Palm Beach, FL 33411
Phone No. 866.909.2220 www.wgiinc.com
Cert No. 6091 - LB No. 7055

REVISIONS

NO.	DATE	DESCRIPTION	BY
1	6-11-2021	RESUBMITTAL	
2	8-20-2021	RESUBMITTAL	
3	11-03-2021	RESUBMITTAL	
4	12-10-2021	RESUBMITTAL	
5	05-13-2022	RESUBMITTAL	
6	08-03-2022	RESUBMITTAL	

CAD: 5581\00-PL-SITE.DWG
JOB NO. 5581.00
DRAWN BY R.C
CHECK BY J.P
DATE 11-03-2021

BELMONT
VILLAGE OF PALM SPRINGS

SITE PLAN

SHEET:
SP-1

Rels Based: P:\5000\581.01 \551 Kirk Road - Land Dev\PLAN\CAD\5581\00-PL-SITE.dwg — Plotted: 8/4/2022 9:25:17 AM Sheet: 8/4/2022 9:19:27 AM

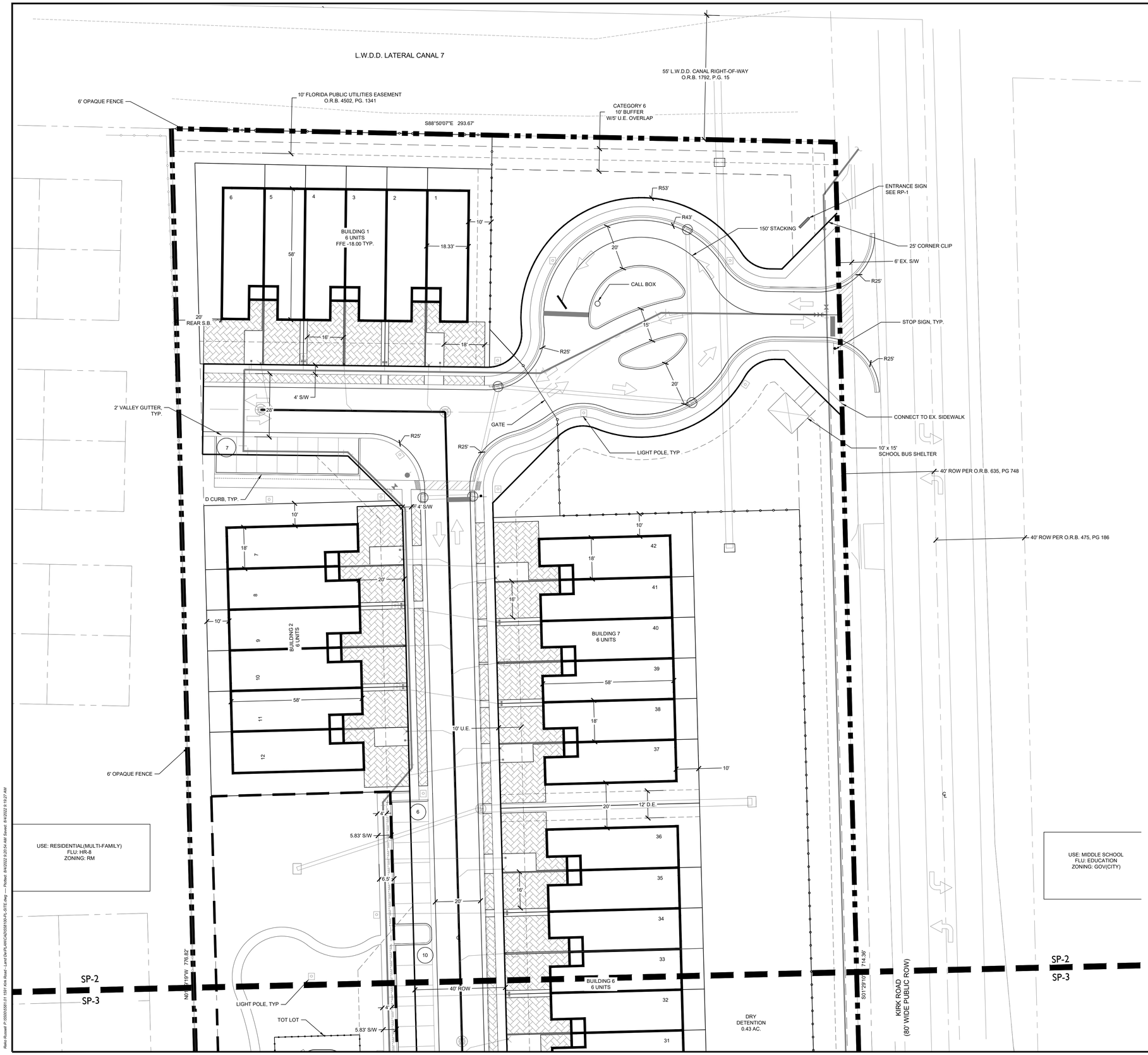

LOCATION MAP

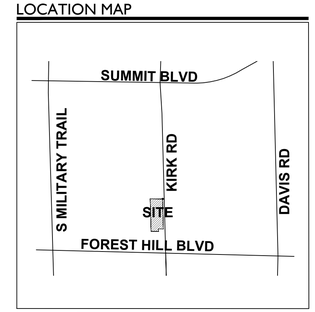

N

0 10 20 40

SCALE: 1" = 20'

WGI
2035 Vista Parkway, West Palm Beach, FL 33411
Phone No. 866.909.2220 www.wgiinc.com
Cert No. 6091 - LB No. 7055

REVISIONS

NO.	DATE	DESCRIPTION	BY
1	6-15-2021	RESUBMITTAL	#####
2	5-13-2022	RESUBMITTAL	

CAD 55810-PL-SITE.DWG	
JOB NO.	5581.00
DRAWN BY	R.C
CHECK BY	J.P
DATE	4-16-2021

BELMONT
VILLAGE OF PALM SPRINGS

SITE PLAN

SHEET:
SP-2

LEGEND

AC. = ACRES
℄ = CENTER LINE
D.E. = DRAINAGE EASEMENT
DRO = DEVELOPMENT REVIEW OFFICERS
D.U. = DWELLING UNITS
EX. = EXISTING
FLU = FUTURE LAND USE
M = MODEL UNIT
O.H.E. = OVERHANG EASEMENT
O.R.B. = OFFICIAL RECORD BOOK
O.S.T. = OPEN SPACE TRACT
P = POSTAL DELIVERY PARKING
P.B. = PLAT BOOK
PDR = PROPERTY DEVELOPMENT REGULATIONS
PG. = PAGE
R = RADIUS
R.O.W. = RIGHT-OF-WAY
S.B. = SETBACK
S/W = SIDEWALK
S.F. = SQUARE FEET
T.B.A. = TO BE ABANDONED
TYP = TYPICAL
TH = TOWNHOME
U.E. = UTILITY EASEMENT

Reto Revised P:\55810\5581.01 1591 6th Blvd - Land Dev\PLAN\CAD\5581010-PL-SITE.dwg — Plotted: 8/4/2022 9:30:54 AM Saved: 8/4/2022 9:30:27 AM

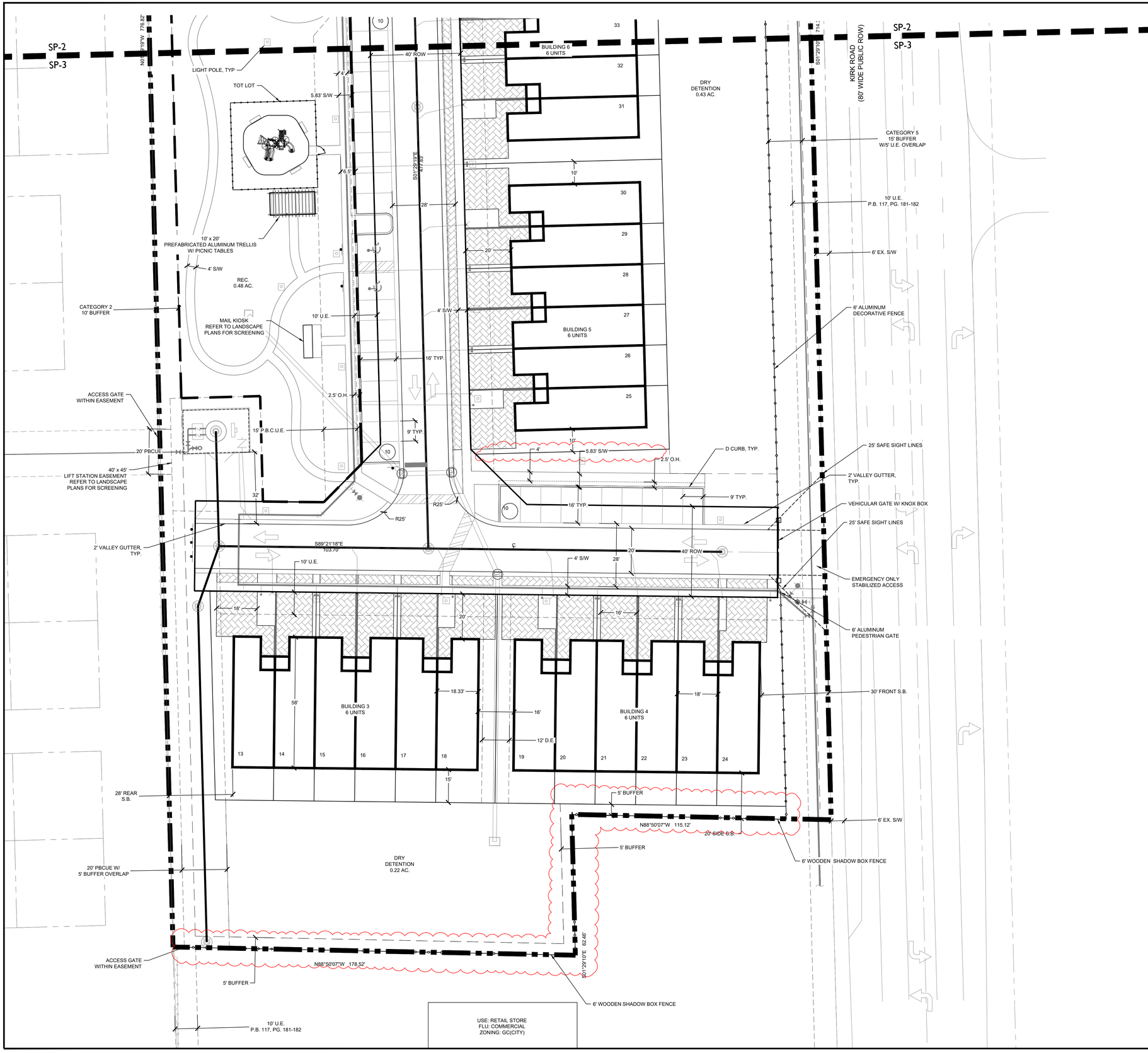

LOCATION MAP

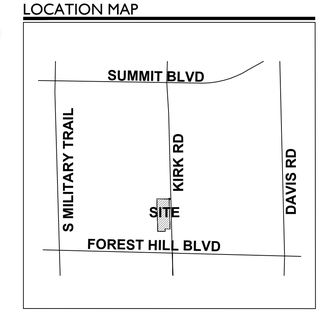

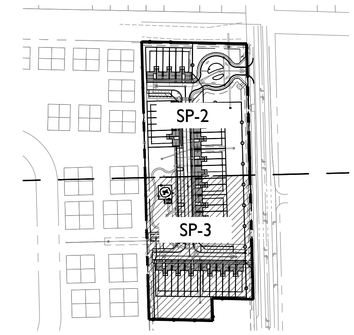

N

0 10 20 40

SCALE: 1" = 20'

WGI®
2035 Vista Parkway, West Palm Beach, FL 33411
Phone No. 866.909.2220 www.wgiinc.com
Cert No. 6091 - LB No. 7055

REVISIONS

NO.	DATE	DESCRIPTION	BY
1	6-15-2021	RESUBMITTAL	#####
2	05-13-2022	RESUBMITTAL	

CAD 55810-PL-SITE.DWG	
JOB NO.	5581.00
DRAWN BY	R.C
CHECK BY	J.P
DATE	4-16-2021

BELMONT
VILLAGE OF PALM SPRINGS

SITE PLAN

SHEET:

SP-3

LEGEND

AC. = ACRES
℄ = CENTER LINE
D.E. = DRAINAGE EASEMENT
DRO = DEVELOPMENT REVIEW OFFICERS
D.U. = DWELLING UNITS
EX. = EXISTING
FLU = FUTURE LAND USE
M = MODEL UNIT
O.H.E. = OVERHANG EASEMENT
O.R.B. = OFFICIAL RECORD BOOK
O.S.T. = OPEN SPACE TRACT
P = POSTAL DELIVERY PARKING
P.B. = PLAT BOOK
PDR = PROPERTY DEVELOPMENT REGULATIONS
PG. = PAGE
R = RADIUS
R.O.W. = RIGHT-OF-WAY
S.B. = SETBACK
S/W = SIDEWALK
S.F. = SQUARE FEET
T.B.A. = TO BE ABANDONED
TYP = TYPICAL
TH = TOWNHOME
U.E. = UTILITY EASEMENT

Reto Russell P:\55810\581.01 1591 Kirk Road - Land Dev\PLAN\CAD\581010-PL-SITE.dwg — Plotted: 8/4/2022 8:21:15 AM Saved: 8/4/2022 8:19:27 AM

TYPICAL UNIT DETAILS

SCALE: NTS

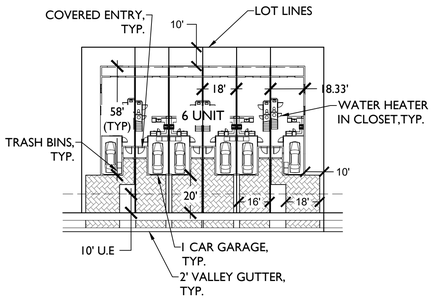

6 UNIT TYPICAL

ENTRY SIGN DETAIL

SCALE: NTS

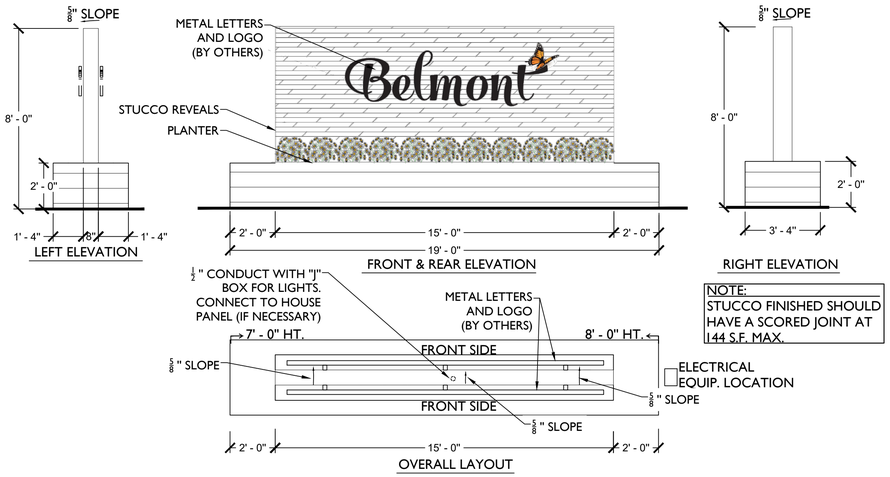

NOTE:
STUCCO FINISHED SHOULD HAVE A SCORED JOINT AT 144 S.F. MAX.

OPEN SPACE PLAN EXHIBIT

SCALE: NTS

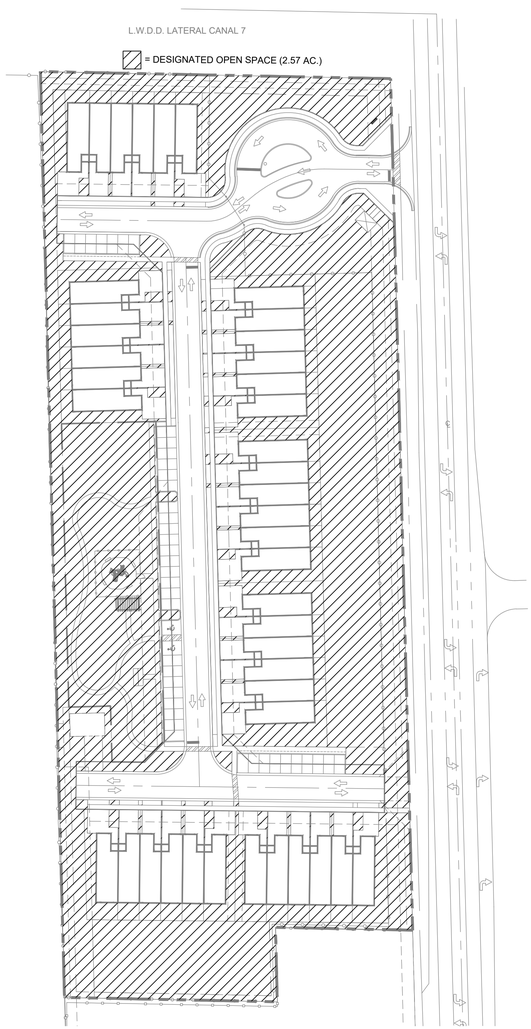

PERVIOUS / IMPERVIOUS PLAN EXHIBIT

SCALE: NTS

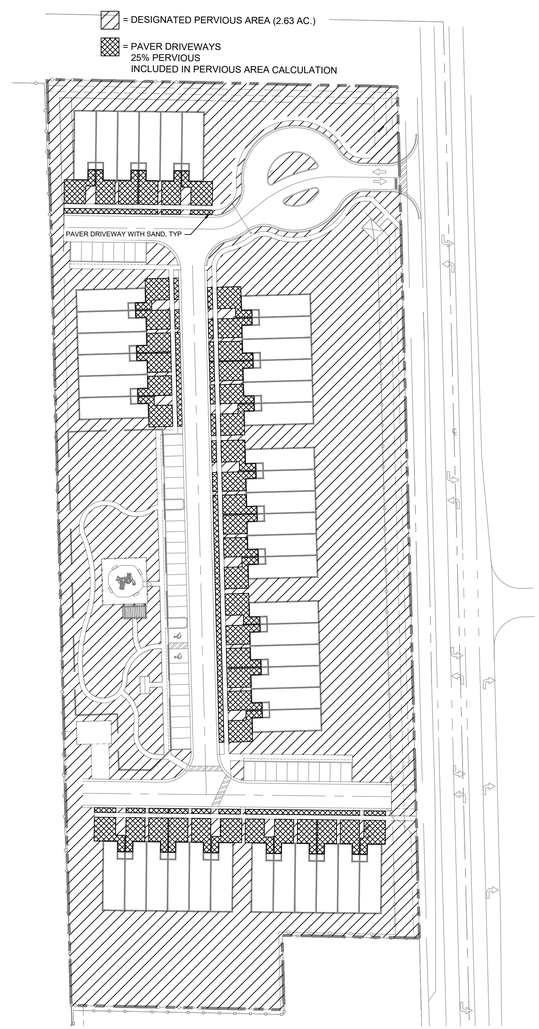

REC. AREA DETAIL

SCALE: NTS

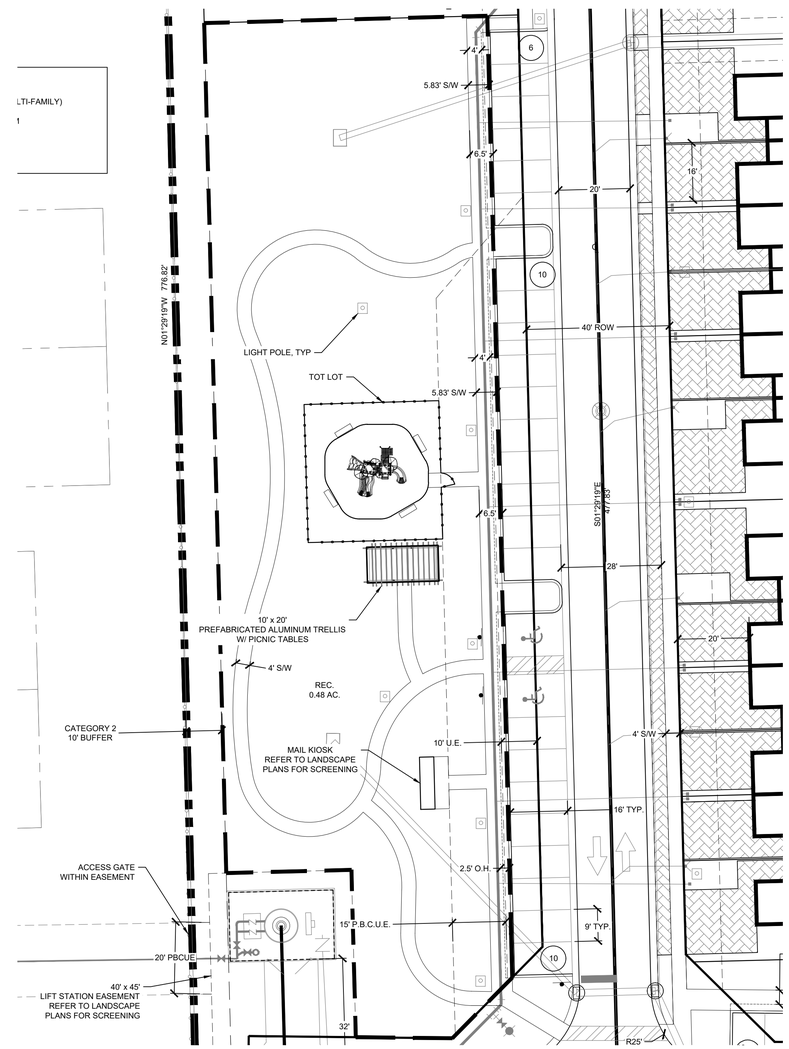

WGI
2035 Vista Parkway, West Palm Beach, FL 33411
Phone No. 866.909.2220 www.wgiinc.com
Cert No. 6091 - LB No. 7055

REVISIONS

NO.	DATE	DESCRIPTION	BY
1	6-11-2021	RESUBMITTAL	#####
2	8-20-2021	RESUBMITTAL	
3	11-03-2021	RESUBMITTAL	
4	12-10-2021	RESUBMITTAL	
5	05-13-2022	RESUBMITTAL	

CAD 556100\PL-SITE\DWG	
JOB NO.	5581.00
DRAWN BY	R.C
CHECK BY	J.P
DATE	4-16-2021

BELMONT
VILLAGE OF PALM SPRINGS

REGULATING PLAN

SHEET:
RP-1

Revit: Revit: P:\5500\5581.01 1501 Kirk Road - Land Dev\Bldg\ARCA\5581\5100-PL-SITE.rvp — Plotted: 8/4/2022 2:21:28 AM Saved: 8/4/2022 1:19:27 AM

Village of Palm Springs

Kirk Road

Property Boundary

The Data is provided "as is" without warranty or any representation of accuracy, timeliness or completeness. The burden for determining accuracy, completeness, timeliness, merchantability and fitness for or the appropriateness for use rests solely on the requester. The Village of Palm Springs make no warranties, express or implied, as to the use of the licensed Data. There are no implied warranties of merchantability or fitness for a particular purpose.The requester acknowledges and accepts the limitations of the Data, including the fact that the Data is dynamic and is in a constant state of maintenance, correction and update.

Data Source: Tax Deed Parcels and Village Limits data provided by the Village of Palm Springs, Parcels provided by Palm Beach County, Basemap provided by ESRI World Imagery.

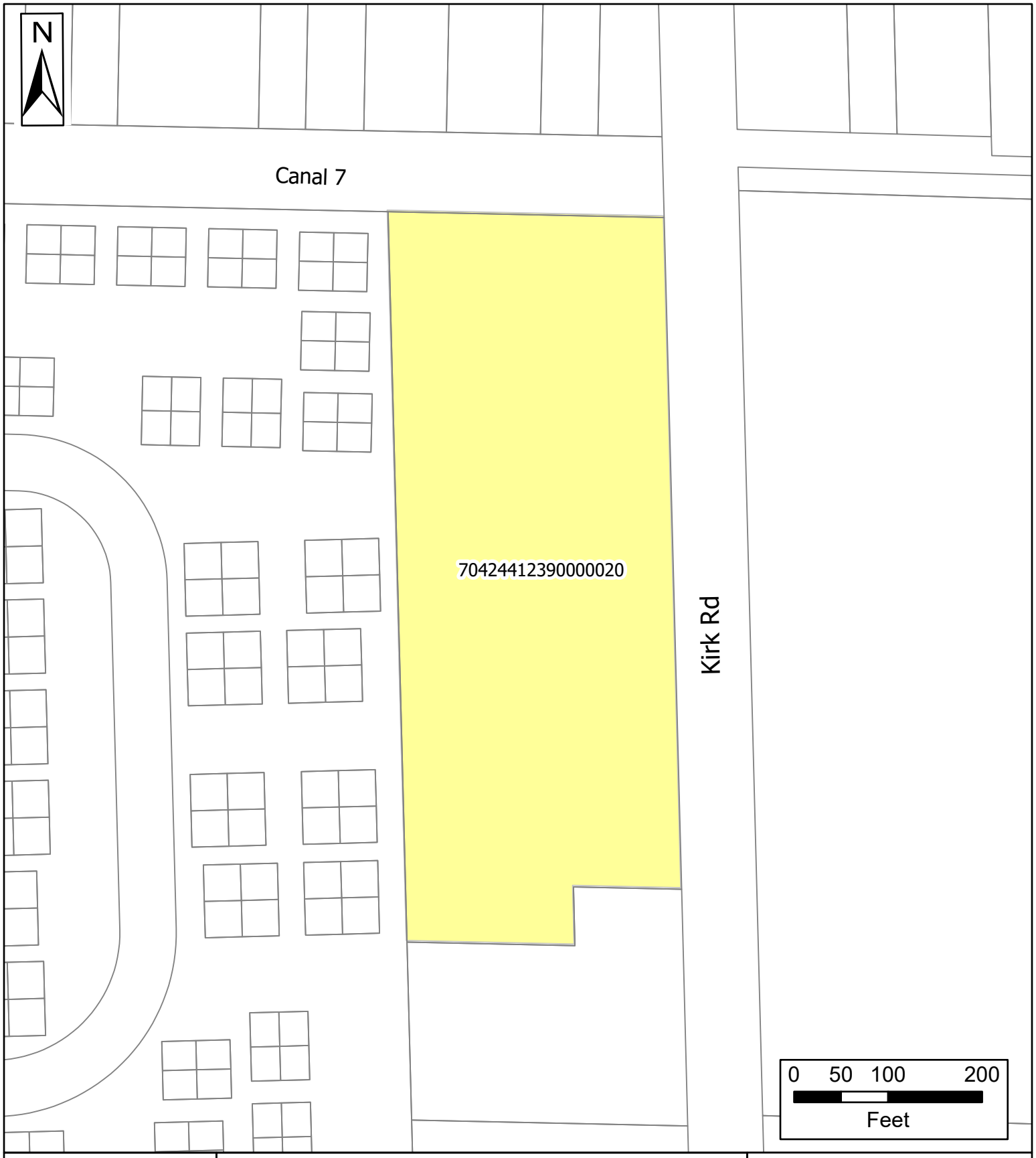

Village of Palm Springs

Kirk Road

Parcels

Property Boundary

The Data is provided "as is" without warranty or any representation of accuracy, timeliness or completeness. The burden for determining accuracy, completeness, timeliness, merchantability and fitness for or the appropriateness for use rests solely on the requester. The Village of Palm Springs make no warranties, express or implied, as to the use of the licensed Data. There are no implied warranties of merchantability or fitness for a particular purpose.The requester acknowledges and accepts the limitations of the Data, including the fact that the Data is dynamic and is in a constant state of maintenance, correction and update.

Data Source: Tax Deed Parcels and Village Limits data provided by the Village of Palm Springs, Parcels provided by Palm Beach County, Basemap provided by ESRI World Imagery.

Village of Palm Springs

Staff Report

AGENDA DATE: November 9, 2022

DEPARTMENT: Planning, Zoning & Building

ITEM #5: Ordinance No. 2022- 13 - Village Code Amendment - Chapter 34 - Land Development - Article VI, Land Use, Section 34-890 - Home Occupations and Article IV, Signs, Section 34-328 - Wall, Under Canopy and Window Signs.

SUMMARY: The Planning, Zoning, and Building Department are requesting an amendment to the Village Code - Chapter 34 - to amend Home Occupation regulations that have been in place since 1994 and additionally, amend the sign regulations to allow and regulate signage for home-based businesses.

The Florida Legislature, in its 2021 session, passed House Bill CS/HB 403: Home Based Business, prohibiting local governments from taking certain actions relating to the licensure and regulation of home-based businesses; including: specifying conditions under which a business is considered a home-based business; authorizing home-based businesses to operate in areas zones for residential use; specifying that home-based businesses are subject to certain business taxes and authorizing the prevailing party in challenges to recover specified attorney fees and costs.

House Bill 403 restricts local jurisdictions from overly regulating home-based businesses, but all businesses must establish compliance with all other local, state, and federal laws. The bill went into effect on July 1, 2021, and is codified as Section 559.955, F.S. This is the basis for staff's proposal to amend the Village code to be consistent with the state laws.

The current code regulates home occupations in order to restrict certain occupations that are undesired within a residential neighborhood, and to keep those businesses within an appropriate zoning district. The new law restricts the regulation of these businesses and more occupations will now be allowed to operate from residential zoning districts. Thus, the Village is amending its Home Occupations, Chapter 34, Article VI, Section 34-890 and concurrently amending the sign regulations, Chapter 34, Article IV, Section 34-328 to correspond with the statute.

Home occupations are an allowable accessory use in a residential dwelling unit and must conform to performance and design requirements that apply to all residential units. A local Business License, as well as a Certificate of Use, will be required prior to starting any home occupation. It should be noted that in certain cases the zoning official may be asked to determine whether the home occupation is allowed or prohibited.

Some of the principles that the staff recommendations are designated to address include:
1. Home occupations are allowed as an accessory use of the residential dwelling.
2. Home occupations cannot be the principal use of the dwelling unit. The occupant must live there and be involved in the business activity, except for up to two employees, who may be independent

contractors or employees.
3. Parking related to the business must comply with local zoning requirements and cannot generate a greater parking volume than would normally be allowed at a similar residence where a business is not conducted. Vehicles used in connection to the home occupation must be legally parked and not located on the right-of-way or over a sidewalk.
4. Architectural modifications to the residence must conform to the residential character and aesthetic of the neighborhood.
5. A maximum of one non-electrical sign shall be permitted to advertise the home occupation and shall not exceed two (2) square feet. No window signs are allowed.
6. No home occupation may occupy more than 20% of the gross floor area of a residence, and in no event a total of more than 300 square feet. Any home occupation over 20% will be considered a principal use.

While the Village has designed the draft regulations to comply with State law, the new regulations are designed to mitigate for adverse impacts to residential neighborhoods from a zoning perspective. Home occupations must still comply with the building and fire regulations.

The proposed ordinance was prepared by the Planning, Zoning & Building Department and reviewed by the Village Assistant Manager, Village Attorney and Village Code Enforcement Officers.

FISCAL IMPACT:
The proposed ordinance does not have a direct fiscal impact to the Village.

ATTACHMENTS:
1. Ordinance No. 2022-13 - Amending Sec. 34-890 - Home Occupations and Sec. 34-328 - Wall, Under Canopy and Window Signs
2. House Bill CS/HB 403 Home Business

ORDINANCE NO. 2022-13

AN ORDINANCE OF THE VILLAGE OF PALM SPRINGS, FLORIDA, AMENDING THE VILLAGE CODE OF ORDINANCES AT CHAPTER 34 LAND DEVELOPMENT, ARTICLE VI, LAND USE, SECTION 34-890, HOME OCCUPATIONS; AMENDING CHAPTER 34, LAND DEVELOPMENT, ARTICLE IV, SIGNS, SECTION 34-328, WALL, UNDER CANOPY AND WINDOW SIGNS; AND PROVIDING FOR CODIFICATION, REPEAL OF CONFLICTING ORDINANCES, SEVERABILITY, AND AN EFFECTIVE DATE.

WHEREAS, the Village of Palm Springs, Florida (the "Village") is a duly constituted municipality having such power and authority conferred upon it by the Florida Constitution and Chapter 166, Florida Statutes; and

WHEREAS, the Village has historically regulated home occupations, otherwise known as home-based businesses;

WHEREAS, the Florida Legislature recently enacted Chapter 2021-202, Laws of Florida, codified as § 559.955, Florida Statutes, with an effective date of July 1, 2021;

WHEREAS, new § 559.955, Florida Statutes, prohibits local governments, including the City from regulating home-based businesses in any manner inconsistent with the terms of such statute; and

WHEREAS, this proposed ordinance amends Section 34-890 of the Village Code of Ordinances to conform to § 559.955, Florida Statutes; and

WHEREAS, this proposed ordinance also amends Section 34-328 of the Village Code of Ordinances, to allow for and regulate signage for home-based businesses; and

WHEREAS, the Village Council has reviewed the recommended revisions and has determined that it is in the best interest of the public health, safety and general welfare of the Village to adopt this ordinance.

NOW THEREFORE, BE IT ORDAINED BY THE VILLAGE COUNCIL OF THE VILLAGE OF PALM SPRINGS, FLORIDA:

Section 1. The foregoing recitals are incorporated herein as true and correct findings of fact of the Village Council and serve as a basis for adoption of this Ordinance.

Section 2. Chapter 34 "Land Development", Article VI, "Land Use," sec. 34-890, "Home Occupations" is hereby amended as follows (words added are underlined; deletions are ~~stricken~~):

Sec. 34-890. - Home occupations.

Home occupations shall be permitted only in residential land development districts as an accessory use and only when a local business tax receipt is issued by the village. Before any local business tax receipt may be issued, such home occupation must first meet each of the following requirements:

(1) The home occupation shall require a local business tax receipt to be issued by the ~~land development director~~ Planning, Zoning and Building Department and shall be conducted within the residential premises and only by the person who is licensed to do so and who is also a resident of the premises. The individual shall be permitted to engage not more than ~~one~~ two employees to assist in the home occupation who do not reside at the dwelling unit and may have additional remote employees who do not work at the dwelling unit. In no such case shall more than one local business tax receipt be issued to any person at one time.

(2) ~~There shall be no~~ Any interior or exterior alterations made to the ~~in the~~ residential dwelling to accommodate a home-based business must conform to the residential character and architectural aesthetics of the neighborhood ~~of the premises in connection with such home occupation~~. Home hobbies are in no way restricted by these regulations

(3) No home occupation shall occupy more than 20 percent of the gross floor area of a residence, exclusive of any porch, attached garage or similar space not suited for or intended to be occupied as living quarters; provided, however, in no event shall the home occupation occupy more than 300 square feet. Any home occupation over 20% will be considered a principal use. Outdoor storage, including storage in carports, is prohibited unless it is not visible from right-of-way, street, or neighboring property.

(4) No goods or materials pertaining to such home occupation shall be sold or displayed on the premises, except articles made on the premises.

(5) No chemical, mechanical, electrical or professional equipment that is not normally a part of domestic or household equipment shall be used for commercial purposes. Machinery which causes interference in radio or television reception shall be prohibited.

(6) ~~No~~ A maximum of one nonelectrical sign shall be permitted to advertise the home occupation, as provided in sec. 34-328(c) of this Code. No merchandise or articles shall be displayed for advertising purposes. No window signs are allowed.

(7) Goods and materials pertaining to such home occupation shall be stored in compliance with sections 10-3 and 10-4 of this Code.

(8) Retail transactions associated with the home occupation may be conducted only in the principal structure and not within any accessory structure.

(9) No home occupation shall generate vehicular traffic in excess of two vehicles concurrently nor more than ten vehicles per day.

(a) Parking requirements pertaining to such home occupation shall be in compliance with section 34-913 and 34-914 of this Code.

(b) Vehicles and trailers used in connection with the business must be parked in legal parking spaces and not within the right-of-way, on or over a public sidewalk or on unimproved surfaces at the residence. Heavy equipment used in connection with the business must be parked and stored so it is not visible from the street or neighboring property. Heavy equipment means commercial, industrial, or agricultural vehicles, equipment, or machinery.

(10) No home occupation may create noise, vibration, heat, smoke, glare, fumes, or noxious odors in excess of those normally expected at a similar dwelling unit where no business is conducted. No home occupation may use, store, or dispose of any corrosive, combustible, or other hazardous or flammable materials or liquids in excess of those normally expected at a similar dwelling unit where no business is conducted.

(11) The property owner, agent and occupant shall be jointly and individually responsible in all enforcement matters.

(12) In addition to any other submittals required for a home occupational license, the applicant shall also submit the following:

(a) Location of dwelling unit where the home occupation will be conducted

(b) Total floor area of the dwelling unit

(c) Area of room or rooms to be utilized in the conduct of the home occupation

(d) A sketch with dimensions showing the floor plan and the area to be utilized for the conduct of the home occupation

(e) A written description of the exact nature of the home occupation; and

(f) The Zoning Official may require a site plan indicating the location of all improvements.

Other Requirements. Issuance of a business license and certificate of use for a home occupation does not waive or supersede any county, state, or federal regulations pertaining to the home occupation. Any applicant for a home occupation must obtain requisite approvals or fulfill the obligations imposed by a county, state or federal agency.

Section 4. Chapter 34 "Land Development", Article IV, "Signs," sec. 34-328, "Wall, under-canopy and window signs" is hereby amended as follows (words added are underlined; deletions are stricken):

Sec. 34-328. - Wall, under-canopy and window signs.

(a) *Wall signs -- commercial and multifamily uses*. The maximum permitted area for a wall sign shall be determined by use of the following formula:

(1) The basic factor shall be the square footage of the building face fronting on a public street right-of-way. Such square footage is computed by multiplying the height of the building, including parapets, not to exceed 30 feet, by the width of the building, by a constant, as provided in the following table:

Building Height	Primary Frontage Constants	Secondary Frontage Constants	
	~~All Areas~~	~~Commercial and Multifamily Areas~~	~~One-Family and Two-Family Residential Areas~~
10′ or less	0.14	0.07	~~0.04~~
More than 10′, up to 20′	0.12	0.06	~~0.03~~
More than 20′	0.10	0.05	~~0.02~~

Example: A building 60 feet (front) wide, 35 feet high and 80 feet deep, on a corner lot, with the secondary frontage facing a commercial area:

60′ × 30′ = 1,800 square feet × 0.10 = 180 square feet sign area (primary frontage)

80′ × 30′ = 2,400 square feet × 0.05 = 120 square feet sign area (secondary frontage)

Example: A building 30 feet (front) wide, 15 feet high and 30 feet deep, on a corner lot, with the secondary frontage facing a residential area:

30′ × 15′ = 450 square feet × 0.12 = 54 square feet sign area (primary frontage)

30′ × 15′ = 450 square feet × 0.06 = 27 square feet sign area (secondary frontage)

(2) When a building fronts on more than one street, one building face shall be considered the primary frontage (usually the street address side) and the other face shall be considered as secondary frontage.

(3) When there is more than one use in any building, each use shall be permitted a wall sign for each frontage attached to the building, and a proportional percentage of the area of the whole allowable wall signage.

(4) When one face of a building fronts on a street and a second face fronts on an internal or external driveway, then the building face fronting on the street shall be considered as the only frontage.

(5) Buildings which simultaneously front on two major roadways, such as Congress Avenue, Tenth Avenue North, Military Trail, Lake Worth Road and Forest Hill Boulevard, shall be considered to have two primary frontages.

(b) *Under-canopy signs*. In addition to other signage permitted in the commercial land development districts, tenants of shopping centers shall be permitted to erect an illuminated or nonilluminated under-canopy sign, which shall not exceed one sign per tenant, a maximum of six-inch letters and a total area of six square feet.

(c) *Wall signs – One-family and two-family residential uses.* One wall sign not to exceed two (2) square feet may be placed next to the primary entrance of any single family or two-family dwelling unit where an authorized home occupation is located.

(~~c~~d) *Window signs.* In addition to other signage permitted in the commercial land development districts, nonresidential principal uses shall be permitted to erect non illuminated window signs, which shall not exceed 25 percent of the aggregate window area. All sign materials must be semi-permanent. Paper, cardboard, etc., are prohibited. No window sign shall be permitted to obscure any means of ingress or egress to the store. Entry doors to a business shall be considered clear zones for security and safety purposes and shall remain:

(1) Clear of any window signs/graphics, with the exception of text for the business name, address and hours of operation, which shall not exceed three square feet in area; and

(2) Free of dark tint that obscures view into the business.

Sign placement on windows shall allow for a clear and unobstructed view from outside the building to the interior along a normal line of sight when viewing the cash register and sales transaction area. Light banding of windows is prohibited. A business is allowed one electronic "OPEN" sign, which must provide a static message and shall not exceed three square feet and shall contain no other message.

Section 5. Codification. The sections of the ordinance shall be made a part of the Village Code of Laws and ordinances and may be re-numbered or re-lettered to accomplish such, and the word "ordinance" may be changed to "section", "division", or any other appropriate word.

Section 5. Repeal of Conflicting Ordinances. All Ordinances, Resolutions or parts of Ordinances and Resolutions in conflict herewith are hereby repealed.

Section 6. Severability. If any word, clause, sentence, paragraph, section or part thereof contained in this Ordinance is declared to be unconstitutional, unenforceable, void or inoperative by a court of competent jurisdiction, such declaration shall not affect the validity of the remainder of this Ordinance.

Section 7. Effective Date. This Ordinance shall become effective immediately upon adoption.

Council Member _____, offered the foregoing Ordinance, and moved its adoption. The motion was seconded by Council Member _____, and upon being put to a vote, the vote was as follows:

	Aye	Nay	Absent
BEV SMITH, MAYOR	☐	☐	☐
DOUG GUNTHER, VICE MAYOR	☐	☐	☐
JONI BRINKMAN, MAYOR PRO TEM	☐	☐	☐
PATTI WALLER, COUNCIL MEMBER	☐	☐	☐
GARY READY, COUNCIL MEMBER	☐	☐	☐

The Mayor thereupon declared this Ordinance approved and adopted by the Village Council of the Village of Palm Springs, Florida, on second reading, the _____ day of _____, 2022.

VILLAGE OF PALM SPRINGS, FLORIDA

BY: _____
BEV SMITH, MAYOR

First Reading:_____

Second Reading:_____

ATTEST:

BY: _____
KIMBERLY WYNN, VILLAGE CLERK

REVIEWED FOR LEGAL FORM AND SUFFICIENCY

BY: _____
GLEN J. TORCIVIA, VILLAGE ATTORNEY

An act relating to home-based businesses; creating s. 559.955, F.S; prohibiting local governments from taking certain actions relating to the licensure and regulation of home-based businesses; specifying conditions under which a business is considered a home-based business; defining the term "heavy equipment"; authorizing home-based businesses to operate in areas zoned for residential use; specifying that home-based businesses are subject to certain business taxes; authorizing adversely affected current or prospective home-based business owners to challenge certain local government actions; authorizing the prevailing party in such challenge to recover specified attorney fees and costs; providing that certain existing and future residential association declarations and documents are not superseded by the act; providing that certain local laws, ordinances, or regulations are not are not superseded; providing an effective date.

Be It Enacted by the Legislature of the State of Florida:

Section 1. Section 559.955, Florida Statutes, is created to read:

26 559.955 Home-based businesses; local government
27 restrictions.—
28 (1) Local governments may not enact or enforce any
29 ordinance, regulation, or policy or take any action to license
30 or otherwise regulate a home-based business in violation of this
31 section.
32 (2) A home-based business that operates from a residential
33 property as provided in subsection (3):
34 (a) May operate in an area zoned for residential use.
35 (b) May not be prohibited, restricted, regulated, or
36 licensed in a manner that is different from other businesses in
37 a local government's jurisdiction, except as otherwise provided
38 in this section.
39 (c) Is only subject to applicable business taxes under
40 chapter 205 in the county and municipality in which the home-
41 based business is located.
42 (3) For purposes of this section, a business is considered
43 a home-based business if it operates, in whole or in part, from
44 a residential property and meets the following criteria:
45 (a) The employees of the business who work at the
46 residential dwelling must also reside in the residential
47 dwelling, except that up to a total of two employees or
48 independent contractors who do not reside at the residential
49 dwelling may work at the business. The business may have
50 additional remote employees that do not work at the residential

51 dwelling.
52 (b) Parking related to the business activities of the
53 home-based business complies with local zoning requirements and
54 the need for parking generated by the business may not be
55 greater in volume than would normally be expected at a similar
56 residence where no business is conducted. Local governments may
57 regulate the use of vehicles or trailers operated or parked at
58 the business or on a street right-of-way, provided that such
59 regulations are not more stringent than those for a residence
60 where no business is conducted. Vehicles and trailers used in
61 connection with the business must be parked in legal parking
62 spaces that are not located within the right-of-way, on or over
63 a sidewalk, or on any unimproved surfaces at the residence.
64 Local governments may regulate the parking or storage of heavy
65 equipment at the business which is visible from the street or
66 neighboring property. For purposes of this paragraph, the term
67 "heavy equipment" means commercial, industrial, or agricultural
68 vehicles, equipment, or machinery.
69 (c) As viewed from the street, the use of the residential
70 property is consistent with the uses of the residential areas
71 that surround the property. External modifications made to a
72 residential dwelling to accommodate a home-based business must
73 conform to the residential character and architectural
74 aesthetics of the neighborhood. The home-based business may not
75 conduct retail transactions at a structure other than the

76 residential dwelling; however, incidental business uses and
77 activities may be conducted at the residential property.
78 (d) The activities of the home-based business are
79 secondary to the property's use as a residential dwelling.
80 (e) The business activities comply with any relevant local
81 or state regulations with respect to signage and equipment or
82 processes that create noise, vibration, heat, smoke, dust,
83 glare, fumes, or noxious odors. Any local regulations on a
84 business with respect to noise, vibration, heat, smoke, dust,
85 glare, fumes, or noxious odors may not be more stringent than
86 those that apply to a residence where no business is conducted.
87 (f) All business activities comply with any relevant
88 local, state, and federal regulations with respect to the use,
89 storage, or disposal of any corrosive, combustible, or other
90 hazardous or flammable materials or liquids. Any local
91 regulations on a business with respect to the use, storage, or
92 disposal of any corrosive, combustible, or other hazardous or
93 flammable materials or liquids may not be more stringent than
94 those that apply to a residence where no business is conducted.
95 (4) Any adversely affected current or prospective home-
96 based business owner may challenge any local government action
97 in violation of this section. The prevailing party in a
98 challenge may recover reasonable attorney fees and costs
99 incurred in challenging or defending the action, including
100 reasonable appellate attorney fees and costs.

101 (5) The application of this section does not supersede:
102 (a) Any current or future declaration or declaration of
103 condominium adopted pursuant to chapter 718, cooperative
104 document adopted pursuant to chapter 719, or declaration or
105 declaration of covenant adopted pursuant to chapter 720.
106 (b) Local laws, ordinances, or regulations related to
107 transient public lodging establishments, as defined in s.
108 509.013(4)(a)1., that are not otherwise preempted under chapter
109 509.
110 Section 2. This act shall take effect July 1, 2021.

Village of Palm Springs

Staff Report

AGENDA DATE: November 9, 2022

DEPARTMENT: Planning, Zoning & Building

ITEM #6: Light Industrial Planned Development Site Plan (SPR22-16) - Oxygen Development - 1525 South Congress Avenue

SUMMARY: Mr. Marty R. A. Minor, agent for the owner, Oxygen Holdings LLC., is requesting a Site Development Plan (SPR22-16) approval to allow an expansion of the Oxygen Development site to include a 150,780 square-foot warehouse building on 17.74 acres (comprised of eleven parcels), generally located at 1525 South Congress Avenue. Currently, Oxygen Development leases warehouse space off-site and would like to bring that use to their existing campus in the Village.

Note: To achieve this desired expansion, the applicant is concurrently requesting the abandonment of a portion of Dalinda Lane right-of-way, Future Land Use Amendment, and Rezoning, which are subject of separate requests. The subject site includes 17.63 acres of land owned by the applicant and approximately 0.102 acres of the Dalinda Lane right-of-way.

On February 26, 2009, the Village Council adopted Resolution 2008-87, approving the Oxygen Development site plan and special exception use to allow a Light Industrial Planned Development Site Plan to construct a 211,363 square feet of manufacturing/warehouse building for the development of personal care services on the site.

Currently, the applicant is seeking to expand the site to facilitate the construction of a 150,780-square-foot warehouse building. The proposed warehouse building will have a ground-level connection to the existing building to allow materials to be moved from one building without being impacted by inclement weather. The proposed expansion also includes 74 new parking spaces, the relocation of 79 existing spaces, and the relocation of the existing drainage lake to the southwest portion of the subject site. In addition, a future phase has been identified for the development of 191 parking spaces on 2.04 acres, located north of the L-7 canal. This parking lot is not proposed to be developed at this time unless additional parking is needed.

Access to the proposed site will use the existing two entrances on Congress Avenue with the trucks servicing the proposed warehouse using the same truck entrance as the existing Oxygen Development building. Additional access to the site will be provided from the extension of Lone Pine Way into the site, where truck traffic will be directed away from Lone Pine Way.

Approval of the Light Industrial Planned Development Site Plan depends on the approval of the Land Use Amendment, Rezoning, and Dalinda right-of-way abandonment.

The Planning, Zoning & Building Staff does not object to the Light Industrial Planned Development Site

Plan and recommends conditional approval of the proposed development subject to forty (40) conditions.

FISCAL IMPACT:

The proposed development will enhance the village's assessed property valuation. This property is located within the Palm Springs Community Redevelopment Agency (CRA) - Congress Avenue District and redevelopment would result in increased tax increment financing (TIF) revenue.

ATTACHMENTS:

1. Exhibit "A" Staff Recommendation and Conditions of Approval
2. Applicant Justification Statements
3. Site Plan, Landscape Plans, Engineering Plans, Architectural Plans and Letters
4. Color Site Plan and Rendering
5. Aerial and Location Maps

PLANNING, ZONING & BUILDING STAFF REPORT

SUBJECT: Site Development Plan (Light Industrial Planned Development) - Oxygen Development– 1525 S Congress Avenue.

Application Summary			
Applicant / Petitioner	Marty R. A. Minor	**Submittal Date**	8/3/2022
Reference Name	Oxygen Development	**Case Number**	**SPR22-16**
		Parcel Control #'s	70-43-44-07-37-006-0000, 70-43-44-07-37-012-0000, 70-43-44-07-37-007-0000, 70-43-44-07-37-008-0000, 70-43-44-07-00-000-5101, 70-43-44-07-00-000-5100, 70-43-44-07-00-000-5110, 70-43-44-07-04-000-0060, 70-43-44-07-04-000-0050, 70-43-44-07-04-000-0070 & 70-43-44-07-04-000-0040.
Location	Assembly of 11 properties with main address 1525 S Congress Avenue	**Site Area**	±17.74 acres
P&Z Bd Meeting	November 9, 2022	**Village Council**	December 8, 2022

Requests	
Proposed Use(s)	Industrial Planned Development Site Plan for the construction of 150,780 square feet warehouse building as an addition to the existing 211,363 square feet warehouse-manufacturing building.
Number of Buildings	2 Buildings (approximately 362,143 SF total) Existing building – 44,485 sf (office) + 166,878 sf (manufacturing/warehouse) Proposed building – 150,780 (warehouse)

Parking			
Code	**Required**	**Provided**	**Meets Requirement**
Total Parking	**Total of 354 parking needed** **Approved - 278** Office -1/200 sf + Warehouse 1/3000 **New warehouse building** 1/2000 sf @ 150,780 sf = 76 spaces	354 spaces total <u>Note</u>: 191 additional parking spaces are proposed on a future phase in case they are needed.	Yes (Resolution 2008-87 approved variance to consider the warehouse as 1/3000 sf)

Setbacks			
Code	**Required Minimum**	**Proposed**	**Meets Requirement**
Front yard (East)	30'	60' (existing)	Yes
Rear yard (West)	20'	62.1'	Yes
Side yard (North & south)	30'	Over 90'	Yes

Site Characteristics			
Existing Use	Retention pond, Vacant lot & Multi-Family Homes	**Proposed Use**	Warehouse building
Existing Zoning	Commercial General (CG) and Residential Multiple-Family (RM)	**Proposed Zoning**	Light Industrial (LI)

Oxygen Development Expansion- Light Industrial Planned Development Site Plan.
P&Z Board 11/9/2022

Existing Future Land Use	Light Industrial, Commercial and Medium Density Residential	**Proposed Future Land Use**	Light Industrial
Surrounding Existing Land Use, Future Land Use, and Zoning			
Direction	**Existing Use**	**Future Land Use**	**Zoning District**
North	Vacant lots, residential multifamily use and a church	Unknown Unincorporated PBC	Unknown Unincorporated PBC
South	Commercial Plaza and residential use	Commercial and Medium Residential	Commercial General (CG) and Residential Multiple-Family (RM)
East	Commercial offices and residential uses	Commercial	Commercial General (CG)
West	Vacant lot	Medium Density Residential	Residential Multiple-Family (RM)
Recommendation			
Planning, Zoning & Building Staff recommends conditional approval of the proposed Light Industrial Plan Development Site Plan for the proposed expansion of the Oxygen Development site to include a 150,780 square-foot warehouse building as depicted on the proposed site plan, based on consistency with the Village Comprehensive Plan and consistency with the CRA Congress Avenue District objectives.			

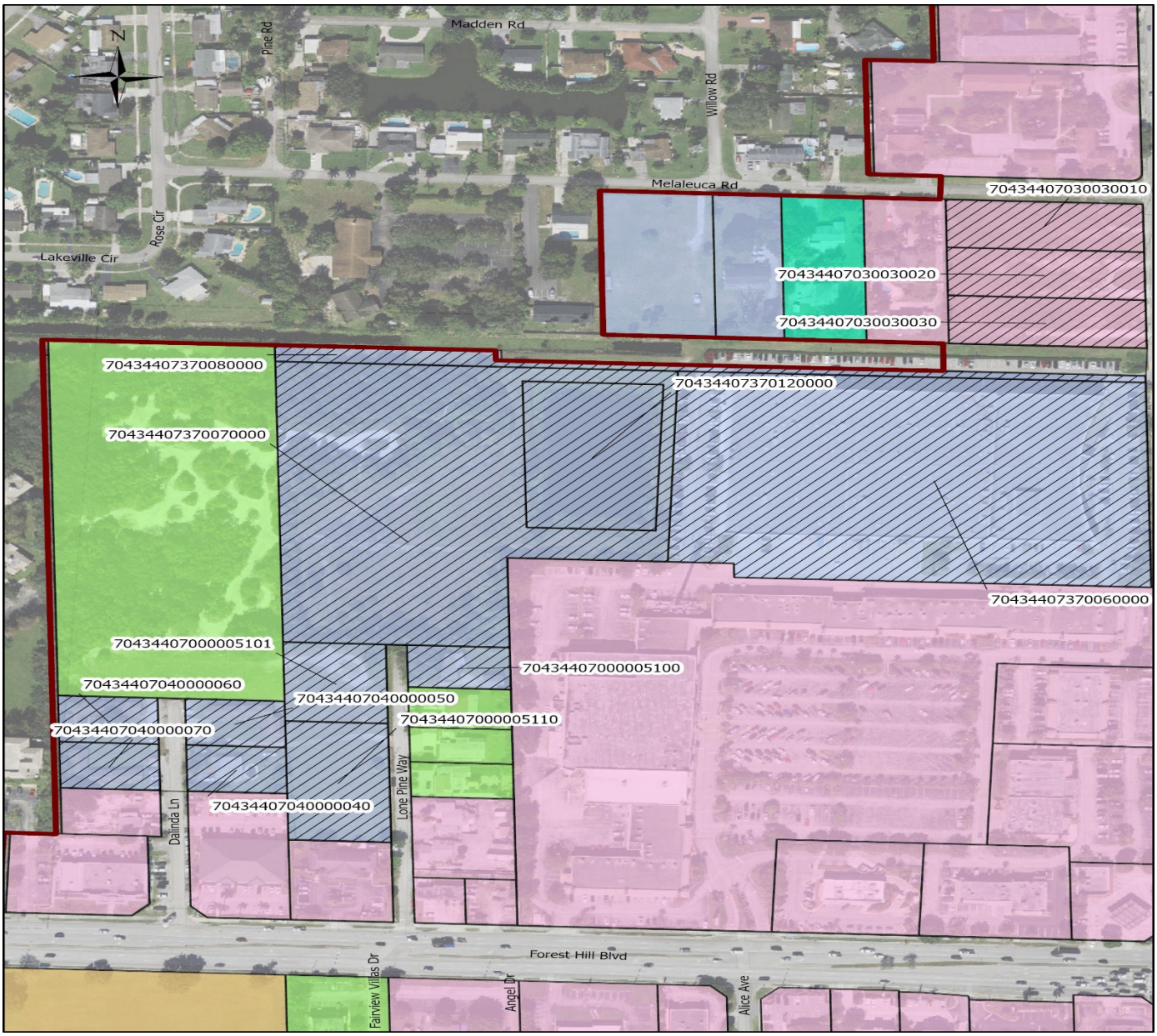

I. Site History

1525 South Congress Avenue

- Resolution 2008-87: Site Plan

On February 26, 2009, the Village Council adopted the above resolution approving with conditions a site development plan to allow the construction of 211,363 square foot two-story production and warehouse facility located at 1525 South Congress Avenue.

- Resolution 2009-32: Plat

On April 9, 2009, the Village Council approved a final plat for Oxygen-Forest Hill Center to subdivide the Forest Hill Center into six individual tracts plus including a water management tract.

- Temporary use permit.

On August 10, 2017, the Village Council approved a temporary use permit agreement to allow temporary parking on the vacant lot adjacent to the property to accommodate the employees of the facility.

II. Comprehensive Plan Consistency

The subject property's is undergoing Future Land Use Amendment and Rezoning to the Light Industrial designation and category, respectively. The proposed small-scale land use amendment and rezoning supported with a planned development site plan, are consistent with goals, objectives, and policies of the Village's Comprehensive Plan.

III. Neighborhood Compatibility

1) The proposed project is located west of Congress Avenue north of Forest Hill Boulevard.
2) Surrounding properties are a mix of residential and commercial uses.
3) The property is located within the Congress CRA District.
4) The Village Center is located within 1 mile.
5) A mix of different uses like general retails, restaurants, grocery supermarket and professional offices are located on the proximities along Military Trail.
6) Available public transportation on Congress Avenue is existing within less than ¼ mile from the property.

IV. Consistency with Palm Springs Congress District CRA

1. Detailed Description of the Proposal's Consistency with Five (5) Key Goals of CRA

I. Improving Utilities and Infrastructure
New utilities and infrastructure will be provided for the proposed warehouse use. The drainage from the site will be located at the southeast corner of the site, which will help buffer the adjacent residential uses from the proposed use.

II. Expanding Job Development and Economic Growth
The expansion of the Oxygen Development campus to bring the company's warehouse facilities to the Village. The warehouse use will bring jobs to the Village along with the jobs created during the construction phase. This investment in the Village and use of infill property meets the goals of the CRA.

III. Enhancing Public Safety
With the expansion of the project, an additional access point to the Oxygen Development site has been provided from Lone Pine Way. Currently, the site has two access points from Congress Avenue. The additional access point will allow for improved traffic circulation for the site and provide public safety vehicles another access points in the case of emergencies.

IV. Increasing and Maintaining Workforce Housing
Although residential is not proposed, the request will result in new jobs within the Village which will help reduce any transportation costs for residents working there.

V. Advancing the Partnership with Palm Beach County
The Applicant will continue work with Palm Beach County with regards to the proposed request. Palm Beach County Traffic Division has issued a TPS approval letter for the proposed development

2. Proposal's effect on existing conditions (identified in CRA Community Redevelopment Plan) in the CRA District.
The proposed development will convert approximately 7 acres of vacant land and existing drainage lake to the proposed warehouse building. The 3.4 acres of existing residential land owned by the Applicant will be converted to a 1.66-acre lake, a dry detention area and landscape buffers. The proposed expansion reflects the plan's desire for urban development with the CRA.

3. Proposal's ability to assist in achieving strategies and objectives of the Palm Springs CRA.

The proposed expansion will bring additional jobs to the Village, which is consistent with Goal II of CRA plan. In addition, the request is consistent with Goal VI which states: "Increase redevelopment activity on Lake Worth Road and Congress Avenue through incentives and the encourages of parcel assemblage for quality redevelopment." The Applicant has assembled adjacent parcels to allow for the expansion of the Oxygen Development campus to bring its warehouse use to the Village.

VI. Regulatory Issues

• The site plan generally conforms to the property development standards of the Light Industrial Planned Development.

1) Proposed project plan generally meets required site development regulations.
2) A Light Industrial Land Use designation and Light Industrial zoning designation shall be approved prior to consideration of the proposed Site Plan.
3) The applicant is responsible to acquire all applicable permits from all regulatory agencies with jurisdiction over the project site, including but not limited to Palm Beach County, LWDD and the Village of Palm Springs.
4) Civil/Utility plans shall be approved by the Village's Engineer.
5) The northern 200 feet of the 40-foot-wide right-of-way of Dalinda Lane shall be abandoned prior to any building permit being issued.
6) The additional right-of-way along Lone Pine Way shall be dedicated to the Village prior to any building permit being issued.
7) Proposed Site Plan meets the Traffic Performance Standards of Palm Beach County.
8) Property shall be platted.

VI. Environmental Issues:

There are no environmental (wetlands, floodplains, etc.) issues identified.

VII. Community Outreach/ Notification

- The subject property was posted on October 29, 2022.
- Public Notification letters were mailed to all property owners within 300 feet radius of subject property on October 29, 2022.
- Legal advertisement was published in the paper on October 27, 2022.
- A community meeting with residents within 300' radius from the property was done on October 25, 2022, as a result of the meeting, the site plan was revised to alleviate residents' concerns.

VIII. Proposed Development Plan Details

The petitioner's development plans dated/received on August 3, 2022, depicts the following:

- Application for Small-Scale Land Use Amendment, Rezoning and Light Industrial Planned Development Site Plan approval for the construction of 150,780 square feet warehouse building.

1. Site Plan dated/received August 3, 2022, revised, and resubmitted on October 28, 2022.
2. Landscape plans dated/received August 3, 2022, revised, and resubmitted on October 28, 2022.
3. Engineering plans dated/received August 3, 2022, revised, and resubmitted on October 28, 2022.
4. Architectural plans dated/received August 3, 2022.
5. Photometric plan dated/received August 3, 2022.
6. Boundary survey.
7. Traffic study.
8. Project narrative and Justification Statement of proposed use.
9. Drainage calculations.
10. Rendering.
11. Colored site plan.

IX. Recommendation

The property owner, Oxygen Holdings, LLC., is proposing an expansion of the Oxygen Development site to include a 150,780-square-foot warehouse building on 17.74 acres, generally located west of Congress Avenue and north of Forest Hills Boulevard. Currently, Oxygen Development leases warehouse space off-site and would like to bring that use to their existing campus in the Village. To achieve this desired expansion, the applicant is requesting an abandonment of a portion of Dalinda Lane Right-of-Way and a Site Development Plan.

The subject site includes 17.63 acres of land owned by the Applicant and approximately 0.102 acres of the Dalinda Lane right-of-way, which is requested to be abandoned as part of a separate request.

On February 26, 2009, the Village Council adopted Resolution 2008-87, approving the Oxygen Development site plan and Special Exception Use to allow for a Light industrial Planned Development to construct a 211,363 square foot manufacturing/warehouse building for the development of personal care services on the site.

Current, the applicant is seeking to expand the site to facilitate the construction of a 150,780-square-foot warehouse building. The proposed warehouse building will have a ground-level connection to the existing building to allow materials to be moved from one building without being impacted by inclement weather. The proposed expansion also includes 74 new parking spaces, relocation of 79 existing spaces, and the relocation of the existing drainage lake to the southwest portion of the subject site. In addition, a future phase has been identified for the development of 191 parking spaces on 2.04 acres, located north of the L-7 canal.

Access to the proposed site will use the existing two entrances on Congress Avenue with the trucks servicing the proposed warehouse using the same truck entrance as the existing Oxygen Development building. An additional

access to the site will be provided from the extension of Lone Pine Way into the site, which truck traffic will be directed away from Lone Pine Way and "No Truck Traffic" signs will be erected.

Planning, Zoning & Building Staff have conducted a review of the application and found the proposed Light Industrial Planned Development Site Plan to be consistent with goal, objectives, and policies of the Village's Comprehensive Plan. The proposed project is generally consistent with the Land Development and zoning regulations and all other portions of the code. The proposed expansion will facilitate economic development with the Village, consistent with the Village Community Redevelopment Agency plan.

Planning, Zoning & Building Staff recommend conditional approvals of the Light Industrial Planned Development Site Plan for the construction of a 150,780 square foot warehouse building subject to the following forty (40) conditions below:

1. Build out date December 31, 2026.
2. The site plan approval is valid for 24 months of Village Council approval.
3. The final plat shall be approved by the Village Council and recorded **prior to issuance of a certificate of occupancy.**
4. The northern 200 feet of the 40-foot-wide right-of-way of Dalinda Lane shall be abandoned **prior to the issuance of any building permit**.
5. The additional right-of-way along Lone Pine Way shall be dedicated to the Village **prior to any building permit can be issued**.
6. The dedication of the exclusive easement to LWDD shall be **executed at time of platting**.
7. Trucks traffic shall only utilize the existing entrances on Congress Avenue, no truck traffic shall be permitted through Long Pine Way.
8. **No parking** shall be allowed, under any circumstances, within the proposed future parking lot until the Site Plan is approved by The Planning, Zoning & Building Department and until property improvements are completed (site plan implemented). **No grass parking** shall be allowed without subsequent Village approval.
9. The proposed future parking lot adjacent to Congress Avenue shall be submitted through the Planning, Zoning & Building Department for review and administrative approval and permitting **prior to any improvements**. **No grass parking** shall be allowed without subsequent Village approval.
10. A Utility/Civil Plan shall be approved by the Village Engineer **at time of permitting.**
11. **At time of civil/utility review**, verify if any adjacent property is discharging or connected to the lake. If any property is affected, a mitigation plan shall be provided.
12. Identify any cross access or cross drainage, if any, at time of platting.
13. Water and sewer shall be provided by Palm Beach County. Copies of the water and sewer permits, and health department permits shall be submitted to the Planning, Zoning & Building Department **at time of permitting**.
14. Outside deliveries, including garbage pick-up shall not be permitted prior to 8:00 am or continue after 9:00 pm.
15. The construction dumpster shall be only provided by Waste Pro USA who is under franchise Agreement with the Village.
16. Conditions of approval stated in Village Engineer's letter (Engenuity Group, Inc.) issued on September 16, 2022, shall be satisfied **at time of Civil/Utility application review**.
17. **At time of permitting**, provide value of construction and number of construction jobs created to be included in CRA annual report.
18. Any existing or proposed utility box/cabinet shall be screened from view, staff recommends wrapping the cabinets/box with a match design accordingly with the existing/proposed location.
19. Any existing or proposed utility easement shall not overlap more than 5' the landscape buffer.
20. Photometric plans shall be approved by the Planning, Zoning & Building Department **at time of permitting**.
21. Landscaped areas shall be irrigated including but not limited to buffer, islands, planter boxes, etc. Irrigation plans shall be provided **at the time of permitting**. Non-potable water shall be used for the irrigation system per Village code.
22. Provide permits from all applicable permitting agencies, including but not limited to, LWDD, PBC Fire Department, PBCWUD, FDEP, FDOT and Village of Palm Springs **at the time of permitting**.

23. The property owner shall register an Agent of Record, prior to issuance of a permit, to establish a contact person responsible for compliance with this Development Order, including site plan/landscape plan details and conditions of approval.
24. A copy of the NPDES Notice of Intent for Generic Permit shall be submitted to the PZB Department at time of permitting.
25. A stabilized surface shall be provided at all times during construction for access by emergency vehicles.
26. All mechanical equipment's and above-ground infrastructure shall be screened from view.
27. The Applicant may be required to undertake additional security measures, based on the number of complaints, or calls for service for incidents at the premises, as determined by the Police Chief. Such additional security measures, as approved by the Police Chief, may include increased on-site security at the operator's sole expense.
28. Verify utility and easement locations to ensure that there are no conflicts with landscaping, revise **at time of permitting** as needed.
29. All new electric utilities shall be underground.
30. A pre-construction meeting shall be scheduled with the Village Planning, Zoning & Building Development Department prior to commencement of any construction activity. Permits are required from the Planning, Zoning & Building Department prior to commencing any construction or renovation. The project shall be constructed in accordance with the FBC edition in effect **at the time of permitting**.
31. A silt barrier shall be installed around the perimeter of the property (within the affected area for the site improvements and new building construction) prior to commencement of any site work or construction activity, and a track pad shall be installed at the construction entrance(s), both of which shall remain through substantial completion.
32. Any sidewalk broken or damaged during construction shall be replaced by the contractor **prior to CO**.
33. The Landscaping shall be certified by the Landscape Architect upon completion and **prior to Certificate of Occupancy/Certificate of Completion** of each improvement area.
34. Absolutely no occupancy, other than construction personnel, is permitted **prior to TCO/CO**.
35. Photometrics must be certified by an engineer **prior to CO**.
36. The civil engineer of record shall certify the site construction **prior to Certificate of Occupancy**.
37. The applicant may be required to provide a resident inspector for structural elements such as concrete pours in accordance with Section 109.1.3 FBC 2010 and F.S. 553.791. Determination shall be made at time of pre-construction conference with Planning Zoning & Building Director.
38. The General Contractor shall be on site during any and all construction activity in accordance with FS 489.1195.
39. **Not parking** is permitted on any adjacent property without subsequent Village approval.
40. **At the time of CO**, the petitioner shall provide the Planning, Zoning & Building Department with electronic copies of as-builts.

PROJECT NARRATIVE

OXYGEN DEVELOPMENT EXPANSION
AND SITE PLAN AMENDMENT
October 26, 2022

urban design studio

Urban Planning and Design
Landscape Architecture
Communication Graphics

Request

Please accept this request by the Applicant and property owner, Oxygen Holdings, Inc., for the expansion of the Oxygen Development site to include a 150,780-square-foot warehouse building on 17.74 acres, generally located west of Congress Avenue and north of Forest Hills Boulevard. Currently, Oxygen Development leases warehouse space off-site and would like to bring that use to their existing campus in the Village. To achieve this desired expansion, the Applicant is requesting development applications an Abandonment of a Village Right-of-Way and a Site Plan amendment.

Please note that the subject site includes 17.63 acres of land owned by the Applicant and approximately 0.102 acres of the Dalinda Lane right-of-way, which is requested to be abandoned as part of this request.

On February 26, 2009, the Village Council adopted Resolution 2008-87, which approved the Oxygen Development site plan on 14.36 acres. With this approval, the site had two parcels with a Commercial Future Land Use designation and a parcel with a Medium Density Residential designation was changed so all parcels within this site plan have a Light Industrial Future Land Use designation. At the same time, the western 4.27 acres of the site was rezoned from Residential Medium to a General Commercial zoning designation. As a result, the entire, existing Oxygen Development site has a General Commercial zoning designation. During the 2009 approval process, a Special Exception was granted to the site to allow for a Planned Unit Development for the Light Industrial use. With these approvals, the Village approved the 211,363 square feet Oxygen Development building, which consists of 44,485 square feet of office space and 166,878 square feet of warehouse/manufacturing space for the development of personal care services on the site.

With the proposed applications, the Applicant is seeking to follow the similar application processes to expand the site to facilitate the construction of a requested 150,780-square-foot warehouse building. The proposed warehouse building will have a ground-level connection to the existing building to allow materials to be moved from one building without being impacted by inclement weather. The proposed expansion also includes 74 new parking spaces, relocation of 79 existing spaces, and the relocation of the existing drainage lake to the southwest portion of the subject site. In addition, a future phase has been identified for the development of 191 parking spaces on 2.04 acres, located north of the L-7 canal and connected to the Oxygen Development campus by the existing sidewalk along South Congress Avenue.

The proposed expansion will help continue to facilitate economic development with the Village, consistent with the Village Comprehensive Plan and Community Redevelopment Agency plan. In addition, the expansion of this light industrial use will provide additional revenues to the Village on subject properties which are either vacant or underdeveloped. This economic development will also help diversify the Village's land use mix, which provides for a stable economic base for the Village.

Location

The 17.74-acre site is generally located west of Congress Avenue and north of Forest Hill Boulevard. The proposed site is located within the Urban Redevelopment Area and the Village's

Community Redevelopment Area's Congress Avenue District. The subject site has a Future Land Use Designation of Light Industrial, Commercial, and Medium Density Residential and a zoning designation of General Commercial and Residential Multi-Family. With this request, the Applicant is looking to have the entire site with Light Industrial Future Land Use and Zoning designations.

Access

Access to the proposed site plan will use the existing two entrances off of Congress Avenue with the trucks servicing the proposed warehouse using the same truck entrance as the existing Oxygen Development building. An additional access to the site will be provided from the extension of Lone Pine Way into the subject site, which will improve the circulation on the site. Please note that truck traffic will be directed away from Lone Pine Way and "No Truck Traffic" signs will be erected.

Parcel Information

The following table provides information regarding the individual parcels, all owned by the Applicant, which consist of the subject site.

PCN#	Address	Acreage	Existing Use	Existing FLU	Proposed FLU	Existing Zoning District	Proposed Zoning District
70-43-44-07-37-006-0000	1525 S. Congress Avenue	6.99 acres	Oxygen Development	Light Industrial	Same	Commercial General (CG)	Same
70-43-44-07-37-008-0000	None	0.57 acres	Vacant	Light Industrial	Same	Commercial General (CG)	Same
70-43-44-07-37-007-0000	None	5.50 acres	Vacant	Light Industrial	Same	Commercial General (CG)	Same
70-43-44-07-37-012-0000	None	1.43 acres	Lake	Light Industrial	Same	Commercial General (CG)	Same
70-43-44-07-00-000-5100	1636 Lone Pine Way	0.31 acres	SF home	Medium Density Residential	Light Industrial	Residential Multi-Family (RM)	Commercial General (CG)
70-43-44-07-00-000-5101	None	0.58 acres	Vacant	Medium Density Residential	Light Industrial	Residential Multi-Family (RM)	Commercial General (CG)
70-43-44-07-00-000-5110	None	0.88 acres	Vacant	Medium Density Residential	Light Industrial	Residential Multi-Family (RM)	Commercial General (CG)
70-43-44-07-04-000-0050	1660 Dalinda Lane	0.33 acres	4-Plex	Medium Density Residential	Light Industrial	Residential Multi-Family (RM)	Commercial General (CG)
70-43-44-07-04-000-0040	1690 Dalinda Lane	0.33 acres	SF Home	Medium Density Residential	Light Industrial	Residential Multi-Family (RM)	Commercial General (CG)
70-43-44-07-04-000-0060	1659 Dalinda Lane	0.33 acres	4-Plex	Medium Density Residential	Light Industrial	Residential Multi-Family (RM)	Commercial General (CG)
70-43-44-07-04-000-0070	1677 Dalinda Lane	0.33 acres	4-Plex	Medium Density Residential	Light Industrial	Residential Multi-Family (RM)	Commercial General (CG)
Dalinda Lane ROW	None	0.18 acres	Local Street	None	Light Industrial	None	Commercial General (CG)

Site Plan Analysis

As indicated above, Oxygen Development is looking to expand its current facilities at 1525 S. Congress Avenue to bring its warehouse operations to the Village. Currently, Oxygen Development has it warehouse facilities off-site, which is a 5-mile drive from its Palm Springs' facility. With these applications, Oxygen Development is requesting to expand its current site by 3.4 acres to add a 150,780 square-foot warehouse to the west of the existing building.

The proposed warehouse building will be linked to the existing building through an approximately 52-foot-wide connection. This connection will allow for materials to be moved from one building to the other without impeding traffic circulation or impacts from inclement weather.

The proposed warehouse will be located within the original site boundary, which is currently vacant and has a drainage lake. With this proposed amendment, the existing lake will be filled in and a new 1.66-acre lake and dry detention area provided. This area of the site currently features vacant lands and residential uses owned by the Applicant. The site will provide drainage for the entire Oxygen Development campus.

The proposed site plan amendment requires 354 parking spaces and 354 parking spaces provided. Seventy-four (74) additional parking spaces will be provided on site with 79 existing spaces relocated. In addition, a future phase has been identified for the development of 191 parking spaces on 2.04 acres, located north of the L-7 canal and connected to the Oxygen Development campus by a five-foot sidewalk. The site will have 31% of impervious area consisting of open space, lake area and landscaping.

Palm Beach County has issued a Traffic Performance Standards (TPS) approval letter for the proposed warehouse building. The letter and traffic report are attached for your review and information.

Landscaping

The applicant is proposing an Affected Area Landscape Plan that will expand on the existing landscape vegetation. The required buffers will provide screening to the adjacent properties. Trees provided along the buffers will be mixture of Brazilian Beauty leaf, Buttonwood, Silver Buttonwood, Live Oaks and Magnolia's as well as Royal Palms. A hedge of shrubs, Cocoplum and Silver Buttonwood, will also be provided within the buffers. Live Oak trees and a mixture of shrubs have been proposed within the parking landscape islands.

Adjacent to the proposed building along the North side, landscaping has been provided as a screen to soften the building from views across from the LWDD L-7 Canal. The landscaping along the proposed building includes East Palatka Holly trees, Sabal Palms (at various heights), Green Buttonwood hedge, and Liriope shrubs.

Architecture

The proposed warehouse building will be 150,780-square-feet in size and will be located directly west of the existing Oxygen Development building. Entrances to the building have been placed on the south and western elevations. Similar to the existing Oxygen Development building, loading for the proposed warehouse will take place on the building's southern elevation. A connection is proposed between the requested warehouse and the existing building to allow for materials to be moved within the campus without being affected by inclement weather. The proposed warehouse will have a maximum height of 45 feet, which is consistent with the Village Code limitation.

Consistency with the Village Comprehensive Plan

The requested expansion of the Oxygen Development site to include the proposed warehouse facility is consistent with several of the Village's Comprehensive Plan goals, objectives and policies regarding land use, redevelopment activities and economic development.

Some of the applicable objective and policies have been provided below in **bold** and our statements of compliance follow in *italics*.

Objective C: The Light Industrial Future Land Use category shall allow as permitted uses establishments which will accommodate employment centers using light- assembly, manufacturing, warehouse, distribution, showroom, and non-local office needs of the Village.

The request will provide for a warehouse use which is permitted within the existing and proposed Light Industrial future land use category described within this Objective.

Policy C.4: Light industrial development shall not exceed a floor area ratio (FAR) of 1.0 and the maximum impervious surface for development within this category shall not exceed 85% of the total acreage.

The proposed Oxygen Development expansion will have a Floor Area Ratio of 0.37 and the impervious area will be 69%. The proposed development is consistent with this policy.

Policy A.6: **Continually maintain and update, when necessary, development regulations which assure efficient, high quality residential design construction, and redevelopment activities.**

The request will provide a modern, high-quality warehouse facility on underutilized lands within the Forest Hill Boulevard and Congress Avenue employment center. The proposed warehouse will be located on vacant land west of the existing Oxygen Development facility.

Policy P.1: **The Urban Redevelopment Area (URA) – The purpose of the URA is to focus on redevelopment and infill efforts by promoting economic growth, improving the present conditions of infrastructure, investment and reinvestment in the area, and discouraging urban sprawl by directing development where resources exist.**

The subject site is located within the identified URA, which encourages infill and redevelopment activities such as the proposed Oxygen Development expansion. The addition of warehouse facilities to the subject site reflects the Applicant's investment in the Village and its economic growth.

Policy P. 3**: Mixed-use centers and employment centers shall be encouraged in the Urban Redevelopment Area (URA) where appropriate.**

The proposed request represents an expansion of the existing employment center along Congress Avenue in the Urban Redevelopment Area. The facilities are close to public transit stops, transportation routes and workforce housing.

Consistent with the Village Community Redevelopment Area plan

The requested expansion of the Oxygen Development campus and the Congress Avenue and Forest Hill Boulevard employment center is consistent with the Village's Community Redevelopment Area (CRA) plan and strategies.

As required by the Village's development application, the following are CRA criteria which have been provided below in **bold** and our responses follow in *italics*.

1) **Detailed Description of Proposal's Consistency with Five (5) Key Goals of CRA**
   a. **Improving Utilities and Infrastructure**

      New utilities and infrastructure will be provided for the proposed warehouse use. The drainage from the site will be located at the southeast corner of the site, which will help buffer the adjacent residential uses from the proposed use.

   b. **Expanding Job Development and Economic Growth**

      The expansion of the Oxygen Development campus to bring the company's warehouse facilities to the Village. The warehouse use will bring jobs to the Village along with the jobs created during the construction phase. This investment in the Village and use of infill property meets the goals of the CRA.

   c. **Enhancing Public Safety**

      With the expansion of the project, an additional access point to the Oxygen Development site has been provided from Lone Pine Way. Currently, the site has two access points from Congress Avenue. The additional access point will allow for improved traffic circulation for the site and provide public safety vehicles another access points in the case of emergencies.

   d. **Increasing and Maintaining Workforce Housing**

      Although residential is not proposed, the request will result in new jobs within the Village which will help reduce any transportation costs for residents working there.

   e. **Advancing the Partnership with Palm Beach County**

      The Applicant will continue work with Palm Beach County with regards to the proposed request. Palm Beach County Traffic Division has issued a TPS approval letter for the proposed development.

2) **Proposal's effect on existing conditions (identified in CRA Community Redevelopment Plan) in the CRA District**

   The proposed development will convert approximately 7 acres of vacant land and existing drainage lake to the proposed warehouse building. The 3.4 acres of existing residential land owned by the Applicant will be converted to a 1.66-acre lake, a dry detention area and

landscape buffers. The proposed expansion reflects the plan's desire for urban development with the CRA.

3) **Proposal's ability to assist in achieving strategies and objectives of the Palm Springs CRA**

The proposed expansion will bring additional jobs to the Village, which is consistent with Goal II of CRA plan. In addition, the request is consistent with Goal VI which states: "Increase redevelopment activity on Lake Worth Road and Congress Avenue through incentives and the encourages of parcel assemblage for quality redevelopment." The Applicant has assembled adjacent parcels to allow for the expansion of the Oxygen Development campus to bring its warehouse use to the Village.

Abandonment of Right-Of-Way

To facilitate the development of the proposed project, a 1.66-acre lake is proposed at the southwest corner of the site to provide drainage for the expanded site. A survey of the subject site is provided for your review. The right-of-way requested to be abandoned is the northern 200 feet of the 40-foot-wide right-of-way for Dalinda Lane, which is located between four parcels which are owned by the Applicant, Oxygen Holdings, LLC. The Indemnification and Hold Harmless Agreement will be provided as the development review process continues.

Photos of Subject Site

1 Southwest View of Existing Building from northeast corner of the site.

2 Northwest View of Existing Building

3 View along LWDD canal on north property line

4 Looking southwest across existing lake

5 Northern view from vacant land west of existing site

6 View of Vacant Land on Lone Pine Way.

7 Existing structure on Lone Pine Way

8 Looking west on Dalinda Lane.

9 Looking West on Dalinda Lane.

SHEET INDEX

OVERALL SITE PLAN SP-1
SITE PLAN ..... SP-2 to SP-3
SITE PLAN DETAILS SP-3

OVERALL SITE PLAN

NORTH
SCALE: 1" = 80'-0"

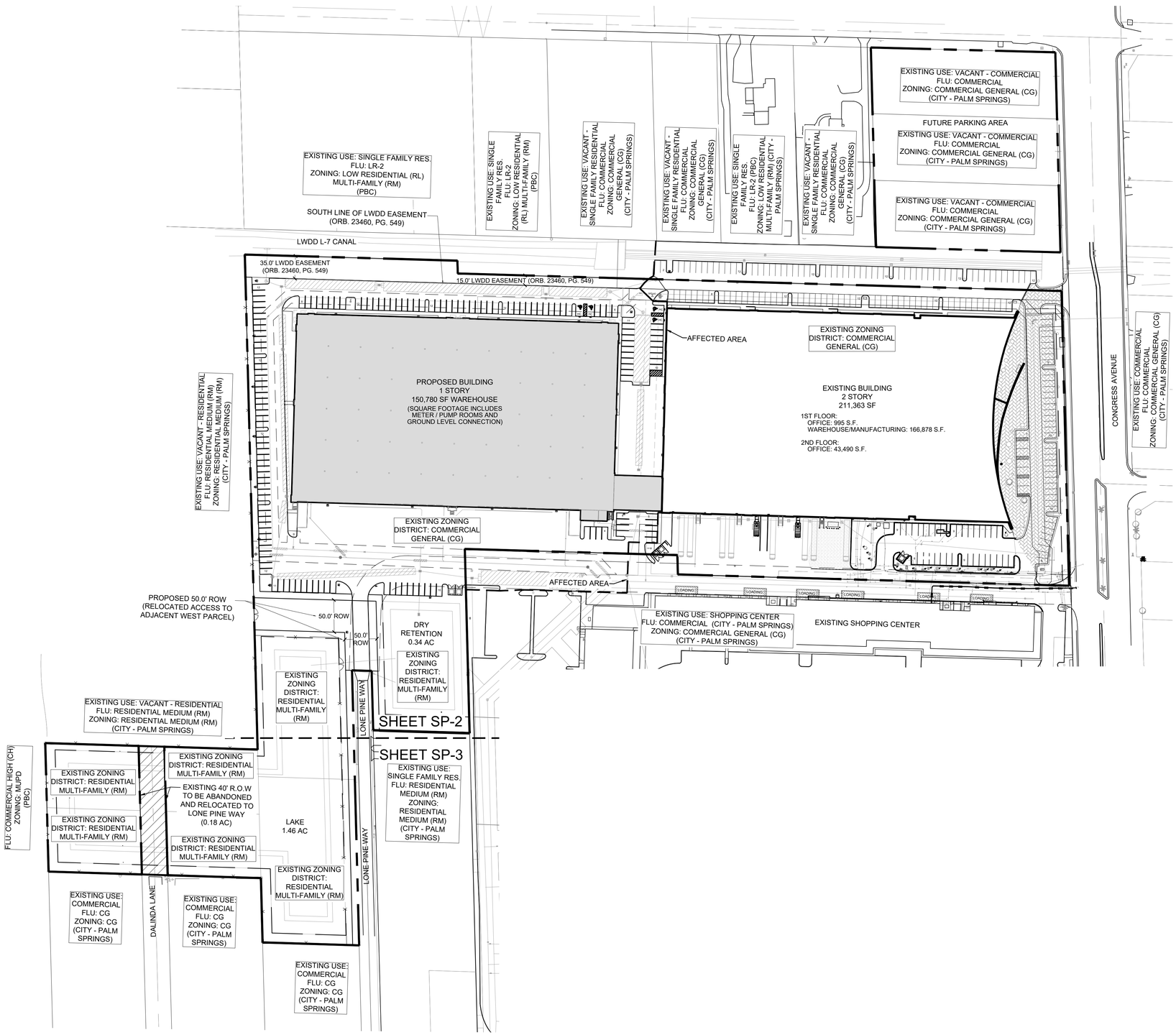

PHASING MAP

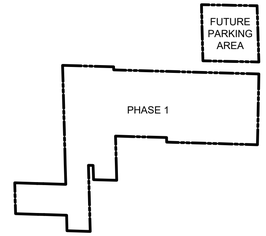

LOCATION MAP

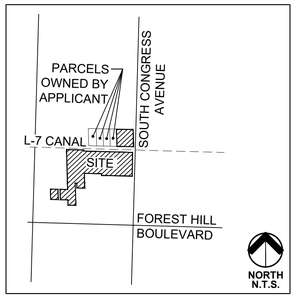

SITE DATA

APPLICATION NAME:		OXYGEN DEVELOPMENT
EXISTING FUTURE LAND USE:		LIGHT INDUSTRIAL / COMMERCIAL / MEDIUM DENSITY RESIDENTIAL
EXISTING ZONING DISTRICT:		COMMERCIAL GENERAL AND RESIDENTIAL MEDIUM
OVERLAY:		URA/TCEA
SECTION/TOWNSHIP/RANGE:		07/44/43
PCN:	70-43-44-07-37-006-0000	70-43-44-07-00-000-5100 / 70-43-44-07-04-000-0040
	70-43-44-07-37-008-0000	70-43-44-07-00-000-5101 / 70-43-44-07-04-000-0060
	70-43-44-07-37-007-0000	70-43-44-07-00-000-5110 / 70-43-44-07-04-000-0070
	70-43-44-07-37-012-0000	70-43-44-07-04-000-0050 / 70-43-44-07-03-003-0010
	70-43-44-07-03-003-0020	70-43-44-07-03-003-0030

TOTAL GROSS SITE AREA: 17.643 AC (768,529.08 SF)
PHASE 1 - INCLUDES AFFECTED AREA

AFFECTED AREA

TOTAL SITE AREA - AFFECTED AREA: 17.643 AC (768,529.08 SF)
EXCLUDES FUTURE PARKING AREA

PROPOSED BUILDING COVERAGE: 41.4% (318,653 SF)
INCLUDES EXISTING & PROPOSED BLDG.

PERMITTED BUILDING HEIGHT: 45'-0"
EXISTING BUILDING HEIGHT: 35'-9" MAX. (2 STORIES)
PROPOSED BUILDING HEIGHT: ENTRY FEATURES 45'-0"
MAIN PARAPET 42'-6"

REQUIRED PARKING: 354 TOTAL SPACES
OFFICE 1/200 223 SPACES
EXISTING BLDG @ 44,485 SF
PROPOSED BLDG @ 0 SF
WAREHOUSE /MANUFACTURING 131 SPACES
EXISTING BLDG @ 166,878 SF
*1/3000 = 56 *VARIANCE APPROVED*

PROPOSED BLDG @ 150,780 SF
1/2000 = 75

PROPOSED PARKING: 354 TOTAL SPACES
EXISTING PARKING 201 SPACES (ORIGINALLY 280 SPACES)
(-79 SP. FROM EXISTING)
PROPOSED PARKING 153 SPACES
HC SPACES @ 11

IMPERVIOUS AREA: 69% / 12.34 AC (537,849.72 SF)
PERVIOUS / OPEN SPACE: 31% / 5.303 AC (230,679.36 SF)
INCLUDES LAKE & DRY RETENTION

WATER SURFACE AREA: 1.46 AC
LAKE TRACT AREA: 2.56 AC
INCLUDES L.M.E. & SLOPE

FUTURE PARKING AREA

TOTAL SITE AREA - FUTURE PARKING AREA: 2.045 AC (89,080.19 SF)
EXCLUDES AFFECTED AREA

DEVELOPMENT TEAM

OWNER / APPLICANT:
OXYGEN DEVELOPMENT
1525 S CONGRESS AVE.
PALM SPRINGS, FL 33406

LANDSCAPE ARCHITECT & PLANNER:
URBAN DESIGN STUDIO
610 CLEMATIS STREET, SUITE CU02
WEST PALM BEACH, FL 33401
(561) 366-1100

ARCHITECT:
HNM ARCHITECTURE
4208 SIX FORKS RD. SUITE 1000
RALEIGH, NC 27609
919.480.8538

SURVEYOR:
ENGENUITY GROUP INC.
1201 BELVEDERE RD.
WEST PALM BEACH, FL 33405
561.655.1151

CIVIL ENGINEER:
LDI LAST DEVENPORT, INC.
1860 OLD OKEECHOBEE RD., SUITE 504
WEST PALM BEACH, FL 33409
561.615.6567

TRAFFIC ENGINEER:
SIMMONS & WHITE, INC.
2581 METROCENTRE BLVD., SUITE 3
WEST PALM BEACH, FL 33407
561.478.7848

GENERAL NOTES

1. BASE INFORMATION OBTAINED FROM SURVEY PREPARED BY ENGENUITY GROUP INC. DATED 03.28.22
2. ALL STOP BARS SHALL BE SETBACK 4' IN ADVANCE OF PEDESTRIAN CROSSWALKS.
2. ACCESSIBLE PAVED ROUTES SHALL NOt EXCEED A 20:1 SLOPE.
3. STOP BAR WILL BE WHITE PAVERS OR THERMOPLASTIC ON ASPHALT.
4. CURBING DETAILS TO BE SHOWN ON ENGINEERING CONSTRUCTION PLANS.
5. SEE ENGINEERING PLANS FOR ROADWAY CROSS SECTIONS.
6. SURROUNDING INFORMATION AND PLANS ARE SHOWN FOR INFORMATIONAL PURPOSES ONLY.
7. HANDICAP PARKING SIGNS SHALL BE PLACED BEHIND THE SIDEWALK IN AREAS WHERE SIDEWALK ABUTS THE STALL AND OUTSIDE THE TWO (2') FOOT OVERHANG AREA WHERE WHEEL STOPS ARE NOT PROVIDED.

urban design studio
Urban Planning & Design
Landscape Architecture
Communication Graphics

610 Clematis Street, Suite CU02
West Palm Beach, FL 33401
561.366.1100 FAX 561.366.1111
www.udsflorida.com
#LCC000035

Copyright:
All ideas, designs, arrangements, and plans represented by this drawing are owned by and the property of the designer, and were created for the exclusive use of the specified project. These ideas, designs, arrangements or plans shall not be used by, or disclosed to any person, firm, or corporation without the written permission of the designer.

Oxygen Development

Palm Springs, Florida
Site Plan

Drawing name: H:\JOBS\Oxygen Development_07-066\Oxygen_SPR_002\Drawings\Site Plan\2022-10-27_SP_Resubmittal.dwg

NORTH

0 40' 80' 160'
Scale: 1" = 80'-0"

Date:	09.2020
Project No.:	07-066.002
Designed By:	JEB
Drawn By:	JEB
Checked By:	WJT

Revision Dates:

05-12-2022	SUBMITTAL
07-29-2022	SUBMITTAL
09-09-2022	RESUBMITTAL
09-20-2022	RESUBMITTAL
10-27-2022	RESUBMITTAL

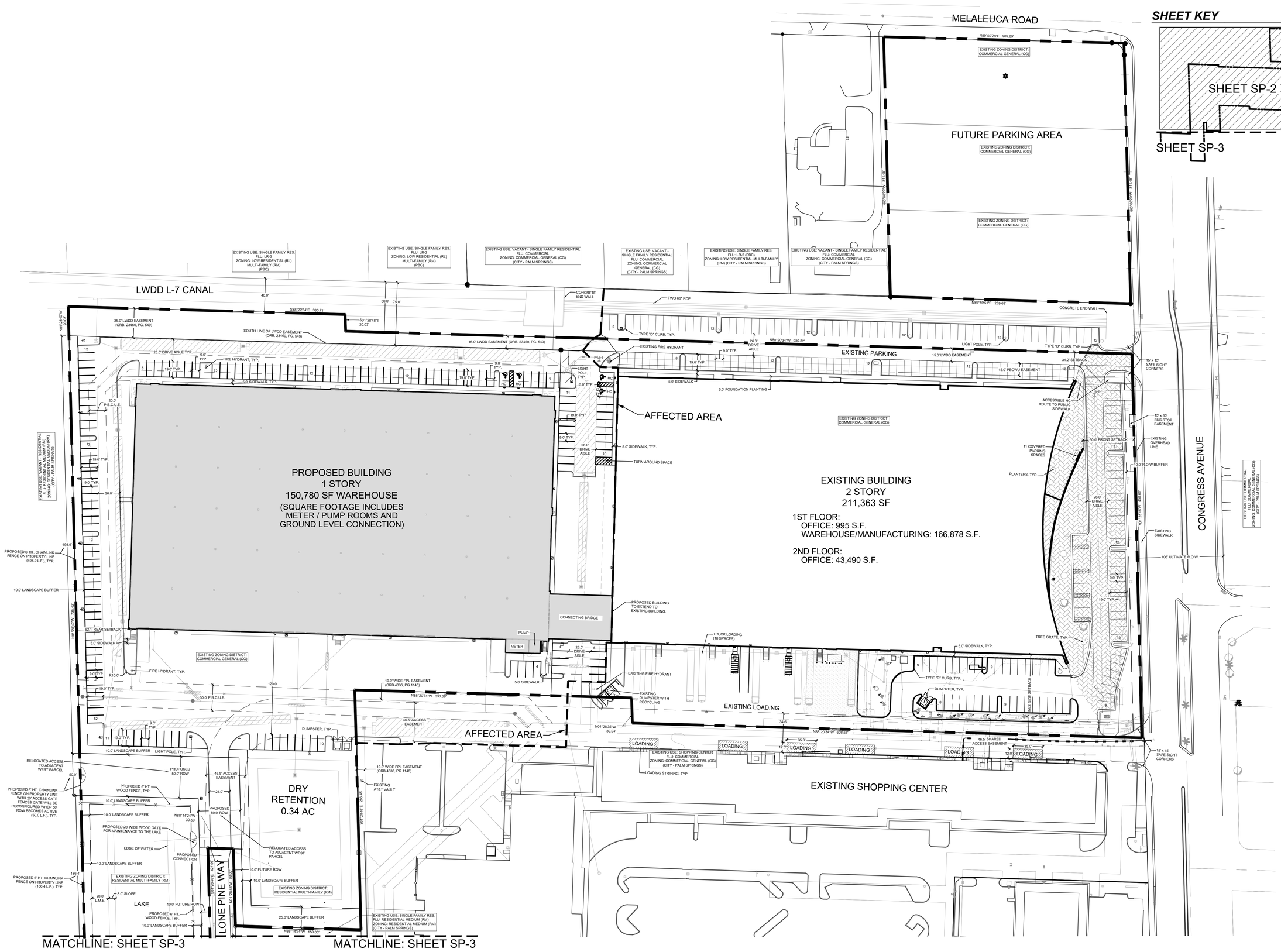

SHEET KEY

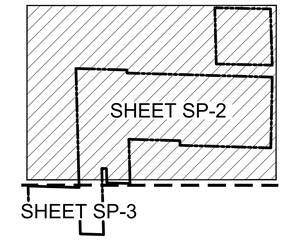

urban design studio

Urban Planning & Design
Landscape Architecture
Communication Graphics

610 Clematis Street, Suite CU02
West Palm Beach, FL 33401
561.366.1100 FAX 561.366.1111
www.udsflorida.com
#LCC000035

Copyright:
All ideas, designs, arrangements, and plans represented by this drawing are owned by and the property of the designer, and were created for the exclusive use of the specified project. These ideas, designs, arrangements or plans shall not be used by, or disclosed to any person, firm, or corporation without the written permission of the designer.

Oxygen Development

Palm Springs, Florida
Site Plan

Drawing name: H:\2083\Oxygen Development_07-066\Oxygen_SPR_0002\Drawings\Site Plan\2022-10-27_SP_Resubmittal.dwg

NORTH

0 20' 50' 100'

Scale: 1" = 50'-0"

Date:	09.2020
Project No.:	07-066.002
Designed By:	JEB
Drawn By:	JEB
Checked By:	WJT

Revision Dates:

05-12-2022 SUBMITTAL
07-29-2022 SUBMITTAL
09-09-2022 RESUBMITTAL
09-20-2022 RESUBMITTAL
10-27-2022 RESUBMITTAL

SP-2
of 3

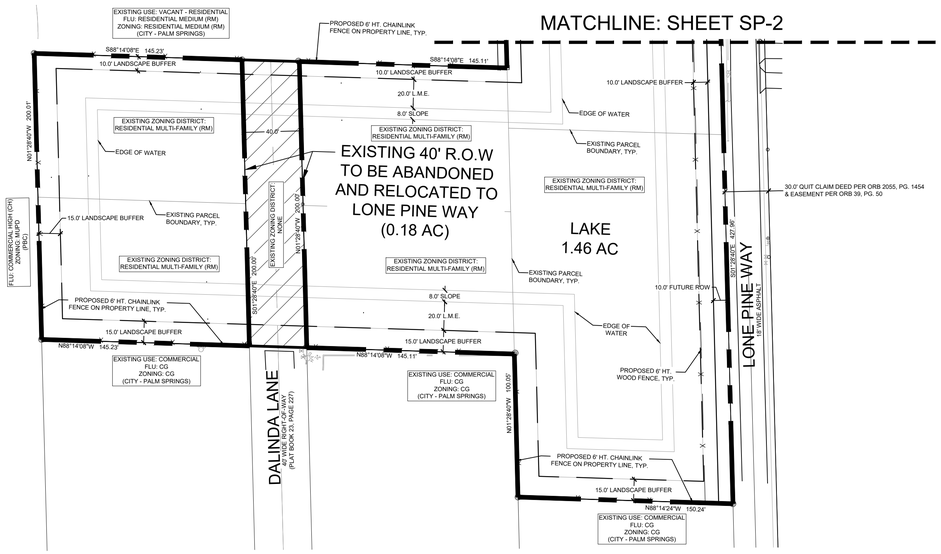

SHEET KEY

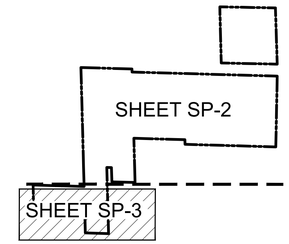

urban design studio
Urban Planning & Design
Landscape Architecture
Communication Graphics

610 Clematis Street, Suite CU02
West Palm Beach, FL 33401
561.366.1100 FAX 561.366.1111
www.udsflorida.com
#LCC000035

Copyright:
All ideas, designs, arrangements, and plans represented by this drawing are owned by and the property of the designer, and were created for the exclusive use of the specified project. These ideas, designs, arrangements or plans shall not be used by, or disclosed to any person, firm, or corporation without the written permission of the designer.

TYPICAL PARKING DETAIL (HC AND REGULAR PARKING SPACE)

N.T.S.

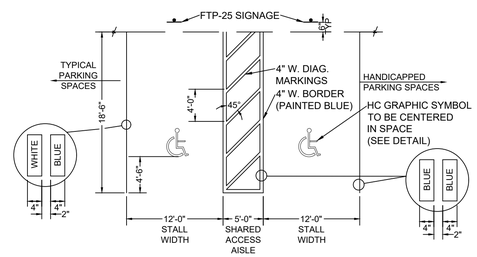

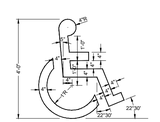

PAINTED HANDICAP SIGN

NOTE: SYMBOL TO BE PAINTED BLUE IN ALL HANDICAPPED SPACES.

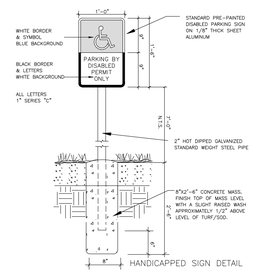

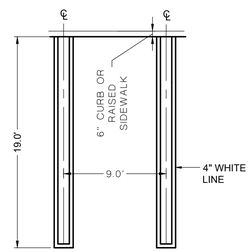

BIKE RACK DETAIL

N.T.S.

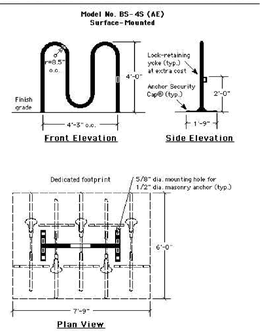

DUMPSTER ENCLOSURE WITH RECYCLING AREA

N.T.S.

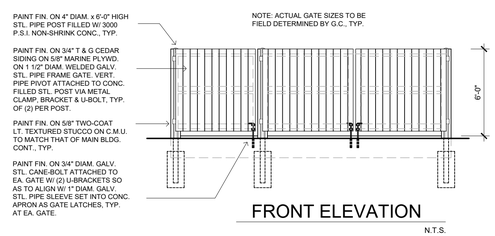

FRONT ELEVATION

N.T.S.

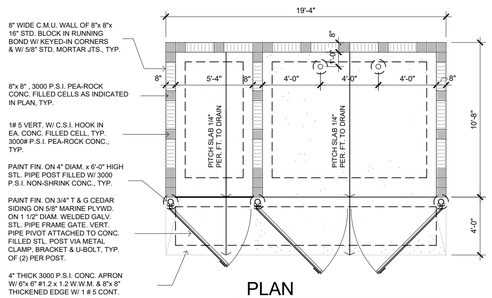

PLAN

N.T.S.

Oxygen Development

Palm Springs, Florida
Site Plan & Site Plan Details

Drawing name: H:\CAD\B3\Oxygen Development_07-066\Oxygen_SPR_2021\Drawings\Site Plan\2022-10-27_SP_Resubmittal.dwg

NORTH

0 20' 50' 100'

Scale: 1" = 50'-0"

Date:	09.2020
Project No.:	07-066.002
Designed By:	JEB
Drawn By:	JEB
Checked By:	WJT

Revision Dates:

05-12-2022 SUBMITTAL
07-29-2022 SUBMITTAL
09-09-2022 RESUBMITTAL
09-20-2022 RESUBMITTAL
10-27-2022 RESUBMITTAL

SP-3
of 3

Oxygen Development

Landscape Plan

Palm Springs, Florida

NOTE: These Landscape Plans have been prepared to satisfy Palm Springs zoning requirements and to conceptually reflect landscape requirements for the site. They are not to be utilized for construction drawings until final engineering and architectural plans are available. These drawings are not to be used for Building Permit application until these plans are finalized.

LOCATION MAP

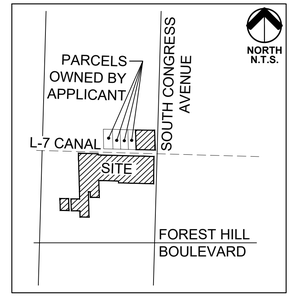

SITE DATA

APPLICATION NAME:		OXYGEN DEVELOPMENT	
EXISTING FUTURE LAND USE:		LIGHT INDUSTRIAL / COMMERCIAL / MEDIUM DENSITY RESIDENTIAL	
EXISTING ZONING DISTRICT:		COMMERCIAL GENERAL AND RESIDENTIAL MEDIUM	
OVERLAY:		URA/TCEA	
SECTION/TOWNSHIP/RANGE:		07/44/43	
PCN:	70-43-44-07-37-006-0000	70-43-44-07-00-000-5100	70-43-44-07-04-000-0040
	70-43-44-07-37-008-0000	70-43-44-07-00-000-5101	70-43-44-07-04-000-0060
	70-43-44-07-37-007-0000	70-43-44-07-00-000-5110	70-43-44-07-04-000-0070
	70-43-44-07-37-012-0000	70-43-44-07-04-000-0050	70-43-44-07-03-003-0010
	70-43-44-07-03-003-0020	70-43-44-07-03-003-0030	
TOTAL GROSS SITE AREA:		17.643 AC (768,529.08 SF)	

PHASE 1 - INCLUDES AFFECTED AREA

GENERAL NOTES

1) STREETSCAPE LANDSCAPE PLANS (STREET TREES AND PLANTINGS WITHIN ROW) ARE A SEPARATE DOCUMENT.
2) SEE ENGINEERING PLANS PREPARED BY OTHERS FOR CONFIGURATION, HEIGHT AND SLOPE OF BERMS.
3) DETAILING OF FOCAL POINTS AND HARDSCAPE ARE A SEPARATE DOCUMENT. SEE PLANS PREPARED BY OTHERS FOR THESE DETAILS.

LANDSCAPE NOTES

1) BASE INFORMATION OBTAINED FROM CIVIL PLANS PREPARED BY LAST DEVENPORT, INC. REVISION DATED 04/22/22.
2) ALL INVASIVE SPECIES WILL BE ERADICATED FROM SITE AS REQUIRED BY CODE.
3) ALL LANDSCAPE MATERIAL SHALL CONFORM TO THE MOST RECENT STANDARDS AS OUTLINED BY THE "GRADES AND STANDARDS FOR NURSERY PLANTS" PUBLISHED BY THE FLORIDA DEPARTMENT OF AGRICULTURE AND CONSUMER SERVICES. ALL PLANT MATERIAL SHALL BE FLORIDA #1 OR BETTER.
4) SIGHT TRIANGLES SHALL BE PROVIDED AND MAINTAINED BY OWNER CLEAR OF VEGETATION TO PROVIDE UNOBSTRUCTED VISIBILITY BETWEEN 30 INCHES AND 8 FEET ABOVE GRADE.
5) UTILITY EASEMENTS SHALL NOT ENCROACH INTO LANDSCAPE BUFFERS MORE THAN 5 FEET OR AS PERMITTED BY CODE.
6) FDOT TYPE "D" OR "F" CURB OR WHEEL STOPS TO BE PROVIDED ALONG ALL LANDSCAPE AREAS, INCLUDING DRIVE AISLES AND PARKING SPACES.
7) ALL INSTALLATION WORK SHALL BE CARRIED OUT IN A PROFESSIONAL MANNER IN ACCORDANCE WITH STANDARD NURSERY AND INSTALLATION PRACTICES.
8) ALL LANDSCAPE AREAS SHALL BE SODDED, MULCHED OR OTHERWISE COVERED WITH GROUND COVER PER THESE PLANS AS LABELED.
9) TREES SHOWN ON THIS PLAN ARE GRAPHIC REPRESENTATION ONLY. TREE SPACING IS BASED ON DESIGN REQUIREMENTS AND TREES SHOWN ON THESE PLANS ATTEMPT TO ACCOMPLISH THAT SPACING WHILE MAINTAINING THE REQUIRED SETBACKS FROM UTILITIES. TREES MAY BE FIELD ADJUSTED TO AVOID CONFLICTS WITH DRIVEWAYS AND UNDERGROUND UTILITIES.
10) CONTRACTOR TO COORDINATE PLANTING OPERATIONS WITH ALL UNDERGROUND UTILITY PROVIDERS AND CALL "SUNSHINE DIG" / 811 TO FLAG UTILITY LOCATIONS PRIOR TO COMMENCING PLANTING OPERATIONS FOR ANY PORTION OF THE SITE. IF "SUNSHINE DIG" / 811 DOES NOT LOCATE ALL UNDERGROUND UTILITIES ON-SITE, THE CONTRACTOR IS RESPONSIBLE FOR SECURING THESE SERVICES FROM A PRIVATE PROVIDER.
11) LANDSCAPE CONTRACTOR TO HAND DIG PLANTING HOLES FOR TREES AND/OR SHRUBS WITHIN FIVE (5') OF ALL FP&L EASEMENTS.
12) GROUND MOUNTED MECHANICAL EQUIPMENT TO BE SCREENED PER THESE PLANS INCLUDING AS-BUILT EQUIPMENT LOCATIONS AT TIME OF LANDSCAPE INSTALLATION. CONTRACTOR TO NOTIFY OWNER / OWNER'S REPRESENTATIVE OF ADDITIONAL REQUIRED PLANT MATERIAL QUANTITIES AT TIME OF LANDSCAPE INSTALLATION FOR ADDITIONAL MECHANICAL EQUIPMENT OR RELOCATED EQUIPMENT THAT MAY REQUIRE ADDITIONAL LANDSCAPE SCREENING.
13) PLANTINGS ADJACENT TO OVERHEAD LINES TO COMPLY WITH FP&L's "RIGHT TREE IN THE RIGHT PLACE" GUIDELINES FOR MINIMUM SEPARATIONS TO OVERHEAD LINES.

UTILITY SETBACK NOTES

1) ALL SETBACK DIMENSIONS SHOWN ON THE PLANS ARE TO BE MET AT THE TIME OF INSTALLATION.
2) TREES ARE TO BE INSTALLED WITH A TEN FOOT (10') SEPARATION FROM ANY WATER OR SEWER MAIN AND/OR SERVICE, HYDRANTS, AND LIFT STATIONS, OR WITH A MINIMUM SEVEN FOOT (7') SETBACK IF INSTALLED WITH A ROOT BARRIER SYSTEM. REFER TO THE "ROOT BARRIER" DETAIL ON THE PLANTING DETAILS SHEET FOR INSTALLATION REQUIREMENTS. HOWEVER IN NO CASE SHALL A TREE ENCROACH INTO A PBCUE WITHOUT PRIOR PBCWUD APPROVAL AND ONLY SOD CAN BE INSTALLED WITHIN 5' OF A FIRE HYDRANT UNLESS OTHERWISE APPROVED BY THE FIRE MARSHAL AND PBCWUD.
3) TREES ARE TO BE INSTALLED WITH A TEN FOOT (10') SEPARATION FROM ANY DRAINAGE OR STORM SEWER INFRASTRUCTURE, OR WITH A MINIMUM SEVEN FOOT (7') SETBACK IF INSTALLED WITH A ROOT BARRIER SYSTEM. REFER TO THE "ROOT BARRIER" ON THE PLANTING DETAILS SHEET FOR INSTALLATION REQUIREMENTS.
4) WHERE REQUIRED, ROOT BARRIER TO BE INSTALLED WITH A MINIMUM 5' SEPARATION TO THE EDGE OF ALL UNDERGROUND UTILITIES AND INFRASTRUCTURE.
5) TREES SHALL BE PLANTED WITH A MIN. 2' SEPARATION BETWEEN ANY ROOT BARRIER (MEASURED FROM THE CENTER OF THE TREE).

LANDSCAPE EXCAVATION & BACKFILL NOTES

1) TREE AND SHRUB PLANTING BEDS WHICH FALL WITHIN OR NEAR ROADWAY AREAS SHALL BE COMPLETELY EXCAVATED AND BACK-FILLED WITH TOPSOIL. ALL SHELL-ROCK OR OTHER BASE MATERIALS, AND ALL SUBSOIL AND DEBRIS, SHALL BE COMPLETELY REMOVED FROM BENEATH SUCH PLANTING AREAS, TO A MINIMUM DEPTH OF 36". UPON COMPLETION OF EXCAVATION, LANDSCAPE ARCHITECT OR OWNER SHALL INSPECT THE EXCAVATED AREA PRIOR TO BACKFILLING WITH TOPSOIL.
2) ALL TREE AND/OR SHRUB PLANTING AREAS WITHIN 8' OF BUILDING FOUNDATIONS, AND ANY OTHER PLANTING AREAS WHERE SIGNIFICANT BURIED CONSTRUCTION DEBRIS IS ENCOUNTERED, SHALL BE COMPLETELY EXCAVATED TO A MINIMUM DEPTH OF 36". UPON COMPLETION OF EXCAVATION, LANDSCAPE ARCHITECT OR OWNER SHALL INSPECT THE EXCAVATED AREA PRIOR TO BACKFILLING WITH TOPSOIL.

MULCH NOTES

1) MULCH SHALL BE GRADE A PREMIUM NATURAL MULCH, OR APPROVED EQUAL, FREE OF FOREIGN MATERIALS AND WEED SEEDS. MINIMUM DEPTH AFTER SETTLING SHALL BE THREE (3") INCHES.

SHEET INDEX

COVER SHEET & PLANT SCHEDULE LA-1
LANDSCAPE PLAN ..... LA-2 to LA-4
PLANTING DETAILS LA-5
PLANTING SPECIFICATIONS LA-6

PLANT SCHEDULE - PHASE 1

1) DROUGHT TOLERANT RATING BASED UPON SFWMD WATERWISE PUBLICATION - SOUTH FLORIDA EDITION.
2) ALL PLANT MATERIAL SPECIFICATIONS AND CONTAINER SIZES LISTED IN THE PROJECT PLANT SCHEDULE ARE REQUIRED MINIMUMS. CONTRACTOR MAY EXCEED THE REQUIRED MINIMUM SPECIFICATION AND CONTAINER SIZE BASED ON MATERIAL AVAILABILITY.
3) ALL PLANT MATERIAL SHALL MEET AND ADHERE TO LATEST EDITION OF FLORIDA GRADES AND STANDARDS FOR NURSERY PLANTS. ALL PLANT MATERIAL SHALL BE FLORIDA # 1 OR BETTER.THE LANDSCAPE ARCHITECT OR OWNER/OWNER'S REPRESENTATIVE HAVE THE RIGHT TO REJECT ANY PLANT MATERIAL NOT MEETING THESE STANDARDS.
4) QUANTITIES ON PLANT SCHEDULE ARE FOR CONVENIENCE ONLY. LANDSCAPE CONTRACTOR IS RESPONSIBLE FOR ALL PLANTS SHOWN ON LANDSCAPE PLANS.

TREES	CODE	QTY	BOTANICAL / COMMON NAME	NATIVE	DROUGHT TOLERANT
	BU	4	Bursera simaruba / Gumbo Limbo 12' Ht. x 2" Cal., 5' CT. Min., 5' Spr. Min. Single Straight Trunk, Full Canopy, No Crotch	Yes	Very
	CB	30	Calophyllum brasiliense / Brazilian Beautyleaf 12' Ht. x 2" Cal., 5' CT. Min., 5' Spr. Min. Single Straight Trunk, Full Canopy, No Crotch	No	Very
	CE	28	Conocarpus erectus / Buttonwood 12' Ht. x 2" Cal., 5' CT. Min., 5' Spr. Min. Single Straight Trunk, Full Canopy, No Crotch	Yes	Very
	CS	34	Conocarpus erectus sericeus / Silver Button Wood 12' Ht. x 2" Cal., 5' CT. Min., 5' Spr. Min. Single Straight Trunk, Full Canopy, No Crotch	Yes	Very
	ED	2	Elaeocarpus decipiens / Japanese Blueberry Tree 12' Ht. x 2" Cal., 5' CT. Min., 5' Spr. Min. Single Straight Trunk, Full Canopy, No Crotch	No	Moderate
	IE	7	Ilex x attenuata `East Palatka` / East Palatka Holly 12' Ht. x 2" Cal., 5' CT. Min., 5' Spr. Min. Single Straight Trunk, Full Canopy, No Crotch	Yes	Moderate
	MV	29	Magnolia virginiana / Sweetbay Magnolia 12' Ht. x 2" Cal., 5' CT. Min., 5' Spr. Min. Single Straight Trunk, Full Canopy, No Crotch	Yes	Moderate
	QV	16	Quercus virginiana / Southern Live Oak 12' Ht. x 2" Cal., 5' CT. Min., 5' Spr. Min. Single Straight Trunk, Full Canopy, No Crotch	Yes	Very
PALM TREES	CODE	QTY	BOTANICAL / COMMON NAME	NATIVE	DROUGHT TOLERANT
	RR	60	Roystonea regia / Florida Royal Palm 12' Ht., 6' G.W., Single Trunk, Full Head, No Scarred Trunk	No	Moderate
	SP	38	Sabal palmetto / Cabbage Palmetto 12'-16' Ct. Varying Heights, Hurricane Cut,	Yes	Very
SHRUBS	CODE	QTY	BOTANICAL / COMMON NAME	NATIVE	DROUGHT TOLERANT
	CHR	1,456	Chrysobalanus icaco `Red Tip` / Red Tip Cocoplum Min. 7 Gal. 36" Ht. x 24" Spr. 24" O.C. Full and Dense Shrub, Full to Base	Yes	Very
	COE	163	Conocarpus erectus / Green Buttonwood Min. 15 Gal. Cont., 5' Ht., 30" spr., 30"o.c. Full Dense Shrub	Yes	Very
	CON	119	Conocarpus erectus sericeus / Silver Button Wood Min. 7 Gal. 36" Ht. x 24" Spr. 24" O.C. Full and Dense Shrub, Full to Base	Yes	Very
LARGE SHRUBS	CODE	QTY	BOTANICAL / COMMON NAME	NATIVE	DROUGHT TOLERANT
	POD	18	Podocarpus macrophyllus / Podocarpus Min. 5' Ht. x 24" Spr., 36" O.C., Full to Base and Dense	No	Moderate
SHRUB AREAS	CODE	QTY	BOTANICAL / COMMON NAME	NATIVE	DROUGHT TOLERANT
	COD	255	Codiaeum variegatum `Mammey` / Mammey Croton Min. 3 Gal. 30" Ht., 18" Spr., 24" O.C. Full dense shrub,	No	Very
	FGI	57	Ficus microcarpa `Green Island` / Green Island Ficus Min. 3 Gal. 30" Ht., 18" Spr., 24" O.C. Full dense shrub,	No	Moderate
	JUN	224	Juniperus chinensis `Parsonii` / Parsoni Juniper* Min. 3 Gal. 30" Ht., 18" Spr., 24" O.C. Full dense shrub,	No	Very
GRASSES	CODE	QTY	BOTANICAL / COMMON NAME	NATIVE	DROUGHT TOLERANT
	DIA	77	Dianella tasmanica `Variegata` / Flax Lily Min. 3 Gal. 30" Ht., 18" Spr., 24" O.C. Full dense shrub,	No	Moderate
	LIR	171	Liriope muscari `Emerald Goddess` / Liriope Min. 3 Gal. 30" Ht., 18" Spr., 24" O.C. Full dense shrub,	No	Moderate
	SPA	20	Spartina bakeri / Sand Cord Grass 1 Gal., 24" Ht. x 22" Spr., 36" O.C., Fully Rooted and Dense	Yes	Moderate
	FAK	90	Tripsacum dactyloides / Fakahatchee Grass Min. 3 Gal. 30" Ht., 18" Spr., 24" O.C. Full dense shrub,	Yes	Very
SOD / MULCH	CODE	QTY	BOTANICAL NAME / COMMON NAME	NATIVE	DROUGHT TOLERANT
NO SYMBOL	SOD	TBD	Stenotaphrum secundatum 'Floratam' / ST. Augustine Sod 'Floratam' 2" Thick Mat and Fully Rooted, Disease and weed free, laid tightly, Stagger Joints	N/A	N/A
NO SYMBOL	BAHIA SOD	TBD	Paspalum notatum / Bahia Grass Disease and weed free, laid tightly, rolled and sanded to level lawn	N/A	N/A
NO SYMBOL	MULCH	TBD	GRENSMART ECO-MULCH / Eco-Mulch Depth of 3" After Settling, Free of Weeds & Pests. Contractor to Determine Quantity of Mulch	N/A	N/A

OVERALL SHEET KEY MAP

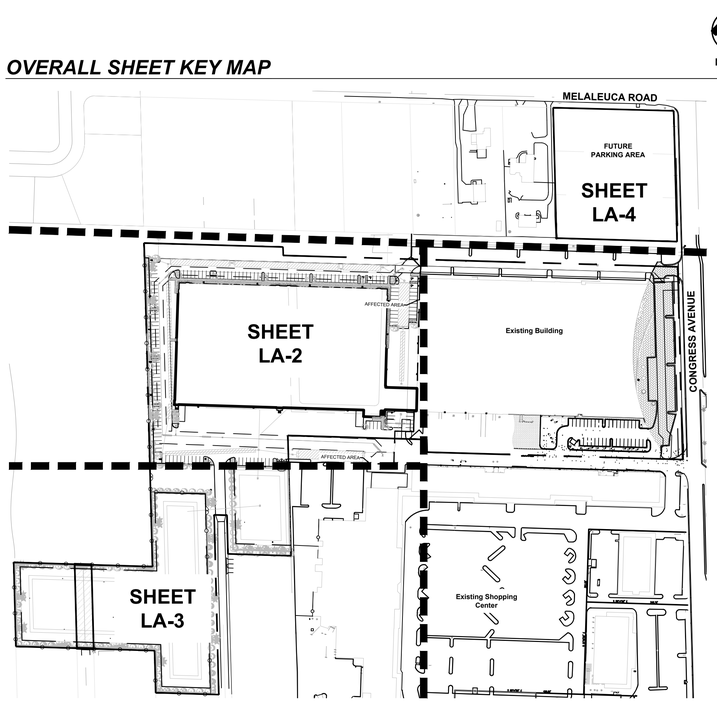

PHASING MAP

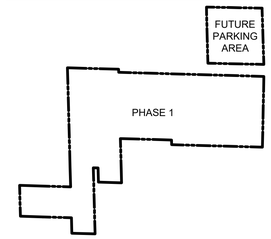

LANDSCAPE TABULAR DATA - PHASE 1

VEHICULAR USE AREA
Per Sec. 34-161 (c)(2), Vehicular use area (VUA), other than parking areas, shall be provided with landscaped areas equal to 10% of the total paved surface.

TOTAL VUA = 100,580SF
10% OF VUA = 10,058 SF

CATEGORY	AGR TIER REQUIREMENT	PROVIDED
INTERIOR TREES	1 PER 2,500 SF @ 10,058 SF = 4 TREES	31 trees / 32 palms Plan meets & exceeds: Min. 1 Tree / Parking island plus Foundation Planting per code

REQUIRED BUFFERS

CATEGORY	REQUIREMENT	NO. REQ'D	PROVIDED
WEST BUFFER 10' & 15' BUFFER CATEGORY 2	TREES: 1/ 20 L.F.	61	64 CANOPY TREES (53 trees + 33 palms)
LENGTH = 1,213.9 L.F.	SHRUBS: 1/2 L.F.	607	608 @ 36" HT. MIN.
EASTH BUFFER 10' BUFFER - CATEGORY 2	TREES: 1/ 20 L.F.	24	24 CANOPY TREES (19 trees + 15 palms)
LENGTH = 486 L.F.	SHRUBS: 1/2 L.F.	243	243 @ 36" HT. MIN.
NORTH BUFFER 10' BUFFER - CATEGORY 2	TREES: 1/ 20 L.F.	16	16 CANOPY TREES (14 trees + 6 palms)
LENGTH = 325.4 L.F.	SHRUBS: 1/2 L.F.	163	164 @ 36" HT. MIN.
SOUTH BUFFER 15' & 20' BUFFER CATEGORY 2	TREES: 1/ 20 L.F.	32	38 CANOPY TREES (29 trees + 27 palms)
LENGTH = 630.4 L.F.	SHRUBS: 1/2 L.F.	315	315 @ 36" HT. MIN.

PLANT SUMMARY - SEE PLANT SCHEDULES SHEET LP-C

PLANT SUMMARY:	REQ'D	PROPOSED
TREE SPECIES	MIN. 3 SPECIES MIN. 50% OF REQUIRED TREES AT 12' HT., 2" CAL. MIN. 75% OF TREES IN VUA	8 Tree Species & 2 Palm Species 100% OF TREES 12' HT. 100% OF TREES IN VUA
PLANT SPECIES	MIN. 40% OF LANDSCAPE AREAS SHALL BE NATIVE	Trees: 63% NATIVE Shrubs: 60% NATIVE

DEVELOPMENT TEAM

OWNER / APPLICANT:
OXYGEN DEVELOPMENT
1525 S CONGRESS AVE.
PALM SPRINGS, FL 33406

LANDSCAPE ARCHITECT & PLANNER:
URBAN DESIGN STUDIO
610 CLEMATIS STREET, SUITE CU02
WEST PALM BEACH, FL 33401
(561) 366-1100

ARCHITECT:
HNM ARCHITECTURE
4208 SIX FORKS RD. SUITE 1000
RALEIGH, NC 27609
919.480.8538

SURVEYOR:
ENGENUITY GROUP INC.
1201 BELVEDERE RD.
WEST PALM BEACH, FL 33405
561.655.1151

CIVIL ENGINEER:
LDI LAST DEVENPORT, INC.
1860 OLD OKEECHOBEE RD., SUITE 504
WEST PALM BEACH, FL 33409
561.615.6567

TRAFFIC ENGINEER:
SIMMONS & WHITE, INC.
2581 METROCENTRE BLVD., SUITE 3
WEST PALM BEACH, FL 33407
561.478.7848

811 KNOW WHAT'S BELOW ALWAYS CALL 811 BEFORE YOU DIG
It's fast. It's free. It's the law.
www.callsunshine.com

urban design studio
Urban Design
Land Planning
Landscape Architecure

610 Clematis Street, Suite CU02
West Palm Beach, FL 33401
561.366.1100 FAX 561.366.1111
www.udsflorida.com
#LA0001739

Copyright:
All ideas, designs, arrangements, and plans represented by this drawing are owned by and the property of the designer, and were created for the exclusive use of the specified project. These ideas, designs, arrangements or plans shall not be used by, or disclosed to any person, firm, or corporation without the written permission of the designer.

Oxygen Development

Palm Springs, Florida
Landscape Plan Cover Sheet

Drawing name: H:\JOBS\Oxygen Development_07-066\Oxygen_SPR_.003\Drawings\Landscape Plan\2022-10-27_LP_Resubmittal.dwg

DESIGN DEVELOPMENT

Date:	05.16.2022
Project No.:	07-066.002
Designed By:	JEB
Drawn By:	JEB
Checked By:	WT

Revision Dates:
05.16.2022 SUBMITTAL
07.29.2022 RESUBMITTAL
09-09-2022 RESUBMITTAL
09-20-2022 RESUBMITTAL
10-27-2022 RESUBMITTAL

LA-1
of 6

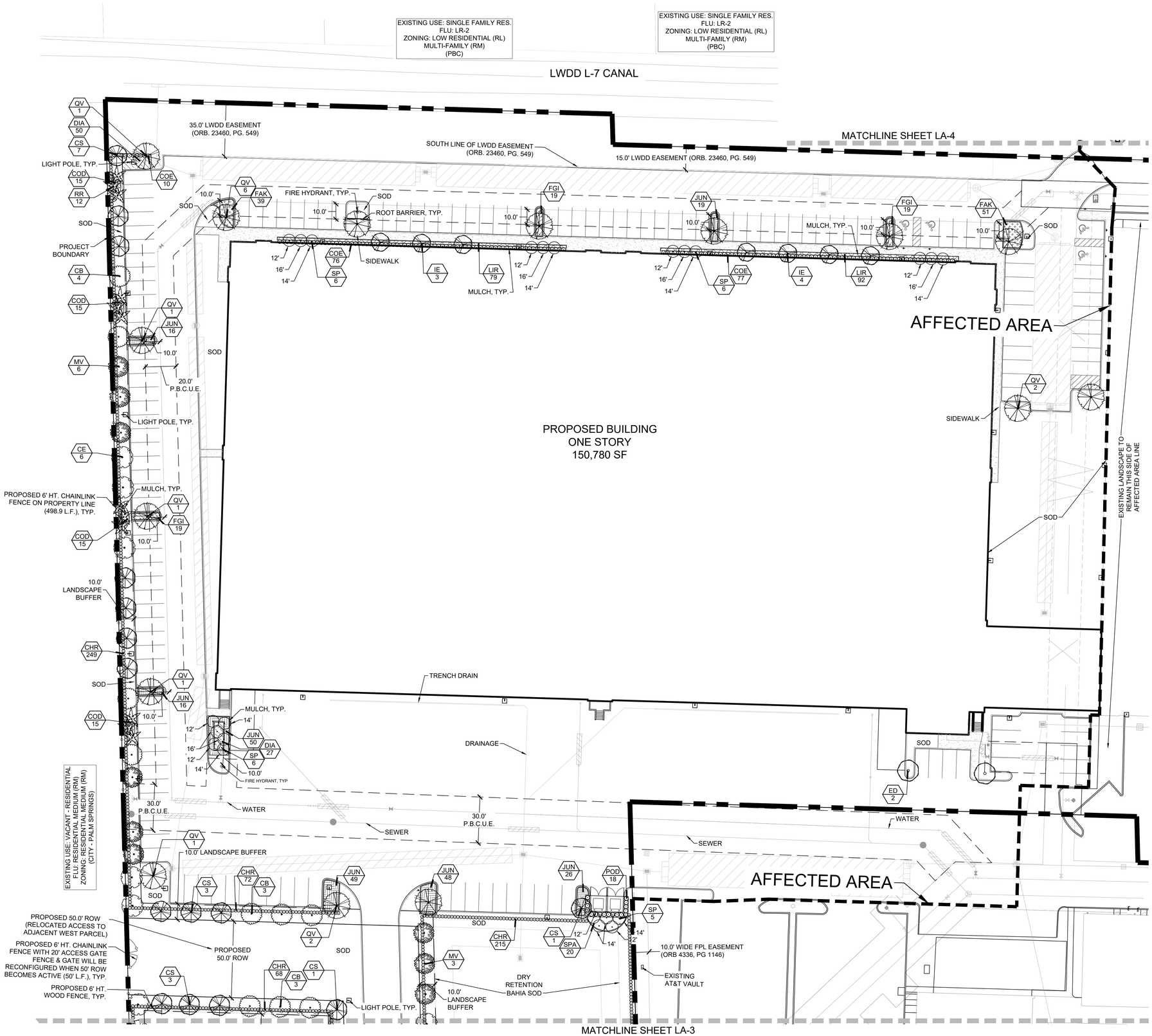

PLANT LEGEND

TREES	CODE	BOTANICAL / COMMON NAME
	BU	Bursera simaruba / Gumbo Limbo 12` Ht. x 2" Cal., 5' CT. Min., 5' Spr. Min. Single Straight Trunk, Full Canopy, No Crotch
	CB	Calophyllum brasiliense / Brazilian Beautyleaf 12` Ht. x 2" Cal., 5' CT. Min., 5' Spr. Min. Single Straight Trunk, Full Canopy, No Crotch
	CE	Conocarpus erectus / Buttonwood 12` Ht. x 2" Cal., 5' CT. Min., 5' Spr. Min. Single Straight Trunk, Full Canopy, No Crotch
	CS	Conocarpus erectus sericeus / Silver Button Wood 12` Ht. x 2" Cal., 5' CT. Min., 5' Spr. Min. Single Straight Trunk, Full Canopy, No Crotch
	ED	Elaeocarpus decipiens / Japanese Blueberry Tree 12` Ht. x 2" Cal., 5' CT. Min., 5' Spr. Min. Single Straight Trunk, Full Canopy, No Crotch
	IE	Ilex x attenuata `East Palatka` / East Palatka Holly 12` Ht. x 2" Cal., 5' CT. Min., 5' Spr. Min. Single Straight Trunk, Full Canopy, No Crotch
	MV	Magnolia viginiana / Sweetbay Magnolia 12` Ht. x 2" Cal., 5' CT. Min., 5' Spr. Min. Single Straight Trunk, Full Canopy, No Crotch
	QV	Quercus virginiana / Southern Live Oak 12` Ht. x 2" Cal., 5' CT. Min., 5' Spr. Min. Single Straight Trunk, Full Canopy, No Crotch
PALM TREES	CODE	BOTANICAL / COMMON NAME
	RR	Roystonea regia / Florida Royal Palm 12` Ht., 6` G.W., Single Trunk, Full Head, No Scarred Trunk
	SP	Sabal palmetto / Cabbage Palmetto 12`-16` Ct. Varying Heights, Hurricane Cut,
SHRUBS	CODE	BOTANICAL / COMMON NAME
	CHR	Chrysobalanus icaco `Red Tip` / Red Tip Cocoplum Min. 7 Gal. 36" Ht. x 24" Spr. 24" O.C. Full and Dense Shrub, Full to Base
	COE	Conocarpus erectus / Green Buttonwood Min. 15 Gal. Cont., 5` Ht., 30" spr., 30"o.c. Full Dense Shrub
	CON	Conocarpus erectus sericeus / Silver Button Wood Min. 7 Gal. 36" Ht. x 24" Spr. 24" O.C. Full and Dense Shrub, Full to Base
LARGE SHRUBS	CODE	BOTANICAL / COMMON NAME
	POD	Podocarpus macrophyllus / Podocarpus Min. 5` Ht. x 24" Spr., 36" O.C., Full to Base and Dense
SHRUB AREAS	CODE	BOTANICAL / COMMON NAME
	COD	Codiaeum variegatum `Mammey` / Mammey Croton Min. 3 Gal. 30" Ht., 18" Spr., 24" O.C. Full dense shrub,
	FGI	Ficus microcarpa `Green Island` / Green Island Ficus Min. 3 Gal. 30" Ht., 18" Spr., 24" O.C. Full dense shrub,
	JUN	Juniperus chinensis `Parsonii` / Parsoni Juniper* Min. 3 Gal. 30" Ht., 18" Spr., 24" O.C. Full dense shrub,
GRASSES	CODE	BOTANICAL / COMMON NAME
	DIA	Dianella tasmanica `Variegata` / Flax Lily Min. 3 Gal. 30" Ht., 18" Spr., 24" O.C. Full dense shrub,
	LIR	Liriope muscari `Emerald Goddess` / Liriope Min. 3 Gal. 30" Ht., 18" Spr., 24" O.C. Full dense shrub,
	SPA	Spartina bakeri / Sand Cord Grass 1 Gal., 24" Ht. x 22" Spr., 36" O.C., Fully Rooted and Dense
	FAK	Tripsacum dactyloides / Fakahatchee Grass Min. 3 Gal. 30" Ht., 18" Spr., 24" O.C. Full dense shrub,
SOD / MULCH	CODE	BOTANICAL NAME / COMMON NAME
NO SYMBOL	SOD	Stenotaphrum secundatum 'Floratam' / ST. Augustine Sod 'Floratam' 2" Thick Mat and Fully Rooted, Disease and weed free, laid tightly, Stagger Joints
NO SYMBOL	BAHIA SOD	Paspalum notatum / Bahia Grass Disease and weed free, laid tightly, rolled and sanded to level lawn
NO SYMBOL	MULCH	GRENSMART ECO-MULCH / Eco-Mulch Depth of 3" After Settling, Free of Weeds & Pests. Contractor to Determine Quantity of Mulch

urban design studio
Urban Design
Land Planning
Landscape Architecure
610 Clematis Street, Suite CU02
West Palm Beach, FL 33401
561.366.1100 FAX 561.366.1111
www.udsflorida.com
#LA0001739

Copyright:
All ideas, designs, arrangements, and plans represented by this drawing are owned by and the property of the designer, and were created for the exclusive use of the specified project. These ideas, designs, arrangements or plans shall not be used by, or disclosed to any person, firm, or corporation without the written permission of the designer.

Oxygen Development

Palm Springs, Florida
Landscape Plan

Drawing name: H:\UDS\Oxygen Development\07-066\Oxygen_SPR_0033\Drawings\Landscape Plan\2022-10-27_LP_Revs\Initial.dwg

NORTH

0 15' 30' 60'

Scale: 1" = 30'-0"

DESIGN DEVELOPMENT

Date:	05.16.2022
Project No.:	07-066.002
Designed By:	JEB
Drawn By:	JEB
Checked By:	WT

Revision Dates:

05.16.2022 SUBMITTAL
07.29.2022 RESUBMITTAL
09-09-2022 RESUBMITTAL
09-20-2022 RESUBMITTAL
10-27-2022 RESUBMITTAL

LA-2
of 6

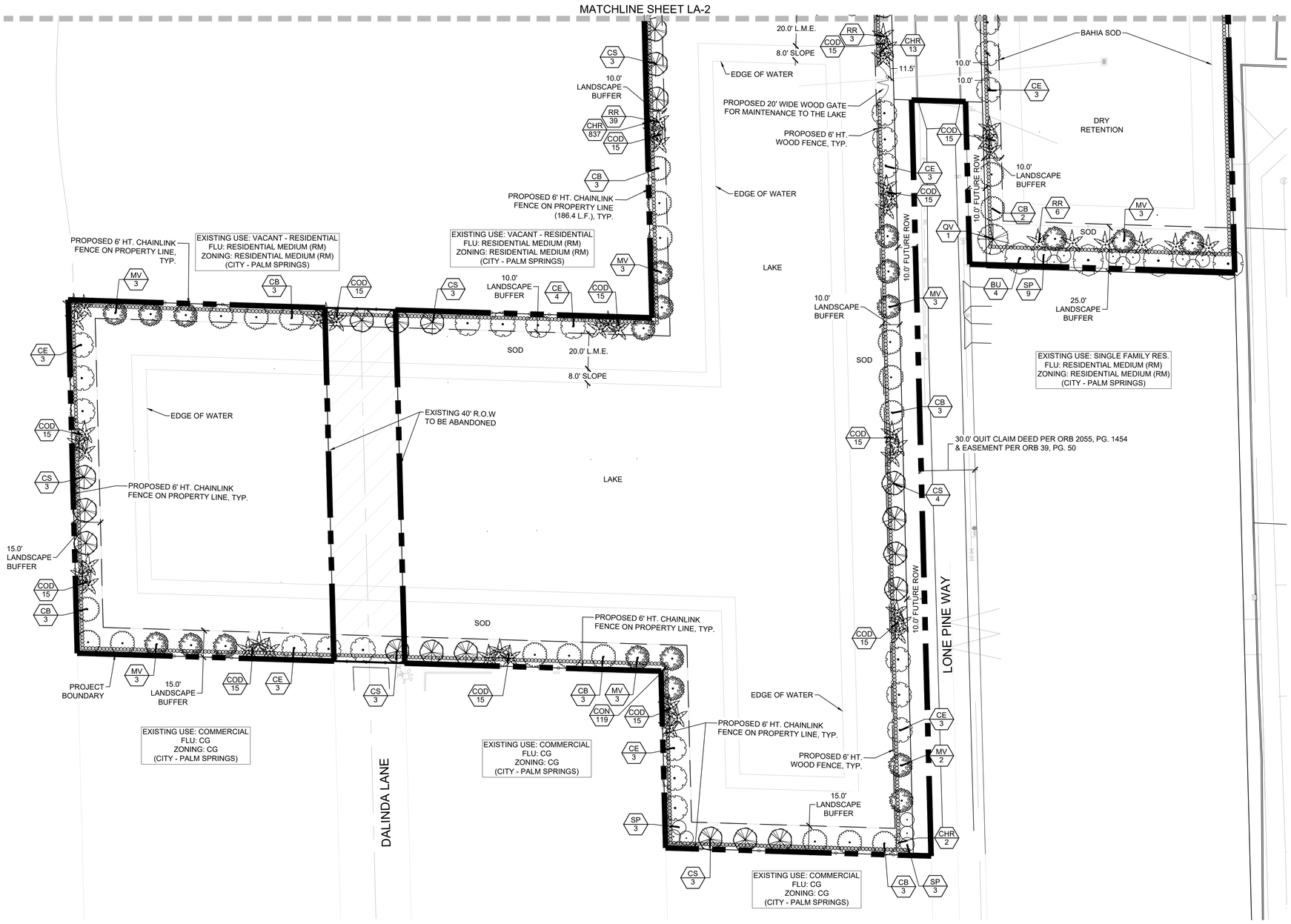

PLANT LEGEND

TREES	CODE	BOTANICAL / COMMON NAME
	BU	Bursera simaruba / Gumbo Limbo 12' Ht. x 2" Cal., 5' CT. Min., 5' Spr. Min. Single Straight Trunk, Full Canopy, No Crotch
	CB	Calophyllum brasiliense / Brazilian Beautyleaf 12' Ht. x 2" Cal., 5' CT. Min., 5' Spr. Min. Single Straight Trunk, Full Canopy, No Crotch
	CE	Conocarpus erectus / Buttonwood 12' Ht. x 2" Cal., 5' CT. Min., 5' Spr. Min. Single Straight Trunk, Full Canopy, No Crotch
	CS	Conocarpus erectus sericeus / Silver Button Wood 12' Ht. x 2" Cal., 5' CT. Min., 5' Spr. Min. Single Straight Trunk, Full Canopy, No Crotch
	ED	Elaeocarpus decipiens / Japanese Blueberry Tree 12' Ht. x 2" Cal., 5' CT. Min., 5' Spr. Min. Single Straight Trunk, Full Canopy, No Crotch
	IE	Ilex x attenuata `East Palatka` / East Palatka Holly 12' Ht. x 2" Cal., 5' CT. Min., 5' Spr. Min. Single Straight Trunk, Full Canopy, No Crotch
	MV	Magnolia viginiana / Sweetbay Magnolia 12' Ht. x 2" Cal., 5' CT. Min., 5' Spr. Min. Single Straight Trunk, Full Canopy, No Crotch
	QV	Quercus virginiana / Southern Live Oak 12' Ht. x 2" Cal., 5' CT. Min., 5' Spr. Min. Single Straight Trunk, Full Canopy, No Crotch
PALM TREES	CODE	BOTANICAL / COMMON NAME
	RR	Roystonea regia / Florida Royal Palm 12' Ht., 6' G.W., Single Trunk, Full Head, No Scarred Trunk
	SP	Sabal palmetto / Cabbage Palmetto 12'-16' Ct. Varying Heights, Hurricane Cut,
SHRUBS	CODE	BOTANICAL / COMMON NAME
	CHR	Chrysobalanus icaco `Red Tip` / Red Tip Cocoplum Min. 7 Gal. 36" Ht. x 24" Spr. 24" O.C. Full and Dense Shrub, Full to Base
	COE	Conocarpus erectus / Green Buttonwood Min. 15 Gal. Cont., 5' Ht., 30" spr., 30"o.c. Full Dense Shrub
	CON	Conocarpus erectus sericeus / Silver Button Wood Min. 7 Gal. 36" Ht. x 24" Spr. 24" O.C. Full and Dense Shrub, Full to Base
LARGE SHRUBS	CODE	BOTANICAL / COMMON NAME
	POD	Podocarpus macrophyllus / Podocarpus Min. 5' Ht. x 24" Spr., 36" O.C., Full to Base and Dense
SHRUB AREAS	CODE	BOTANICAL / COMMON NAME
	COD	Codiaeum variegatum `Mammey` / Mammey Croton Min. 3 Gal. 30" Ht., 18" Spr., 24" O.C. Full dense shrub,
	FGI	Ficus microcarpa `Green Island` / Green Island Ficus Min. 3 Gal. 30" Ht., 18" Spr., 24" O.C. Full dense shrub,
	JUN	Juniperus chinensis `Parsonii` / Parsoni Juniper* Min. 3 Gal. 30" Ht., 18" Spr., 24" O.C. Full dense shrub,
GRASSES	CODE	BOTANICAL / COMMON NAME
	DIA	Dianella tasmanica `Variegata` / Flax Lily Min. 3 Gal. 30" Ht., 18" Spr., 24" O.C. Full dense shrub,
	LIR	Liriope muscari `Emerald Goddess` / Liriope Min. 3 Gal. 30" Ht., 18" Spr., 24" O.C. Full dense shrub,
	SPA	Spartina bakeri / Sand Cord Grass 1 Gal., 24" Ht. x 22" Spr., 36" O.C., Fully Rooted and Dense
	FAK	Tripsacum dactyloides / Fakahatchee Grass Min. 3 Gal. 30" Ht., 18" Spr., 24" O.C. Full dense shrub,
SOD / MULCH	CODE	BOTANICAL NAME / COMMON NAME
NO SYMBOL	SOD	Stenotaphrum secundatum 'Floratam' / ST. Augustine Sod 'Floratam' 2" Thick Mat and Fully Rooted, Disease and weed free, laid tightly, Stagger Joints
NO SYMBOL	BAHIA SOD	Paspalum notatum / Bahia Grass Disease and weed free, laid tightly, rolled and sanded to level lawn
NO SYMBOL	MULCH	GRENSMART ECO-MULCH / Eco-Mulch Depth of 3" After Settling, Free of Weeds & Pests. Contractor to Determine Quantity of Mulch

urban design studio
Urban Design
Land Planning
Landscape Architecure
610 Clematis Street, Suite CU02
West Palm Beach, FL 33401
561.366.1100 FAX 561.366.1111
www.udsflorida.com
#LA0001739

Copyright:
All ideas, designs, arrangements, and plans represented by this drawing are owned by and the property of the designer, and were created for the exclusive use of the specified project. These ideas, designs, arrangements or plans shall not be used by, or disclosed to any person, firm, or corporation without the written permission of the designer.

Oxygen Development

Palm Springs, Florida
Landscape Plan

Drawing name: H:\UDS\Oxygen Development_07-066\Oxygen_SPR_2022\Drawings\Landscape Plan\2022-10-27_LP_Resubmittal.dwg

NORTH

0 15' 30' 60'

Scale: 1" = 30'-0"

DESIGN DEVELOPMENT

Date:	05.16.2022
Project No.:	07-066.002
Designed By:	JEB
Drawn By:	JEB
Checked By:	WT

Revision Dates:

05.16.2022 SUBMITTAL
07.29.2022 RESUBMITTAL
09-09-2022 RESUBMITTAL
09-20-2022 RESUBMITTAL
10-27-2022 RESUBMITTAL

LA-3
of 6

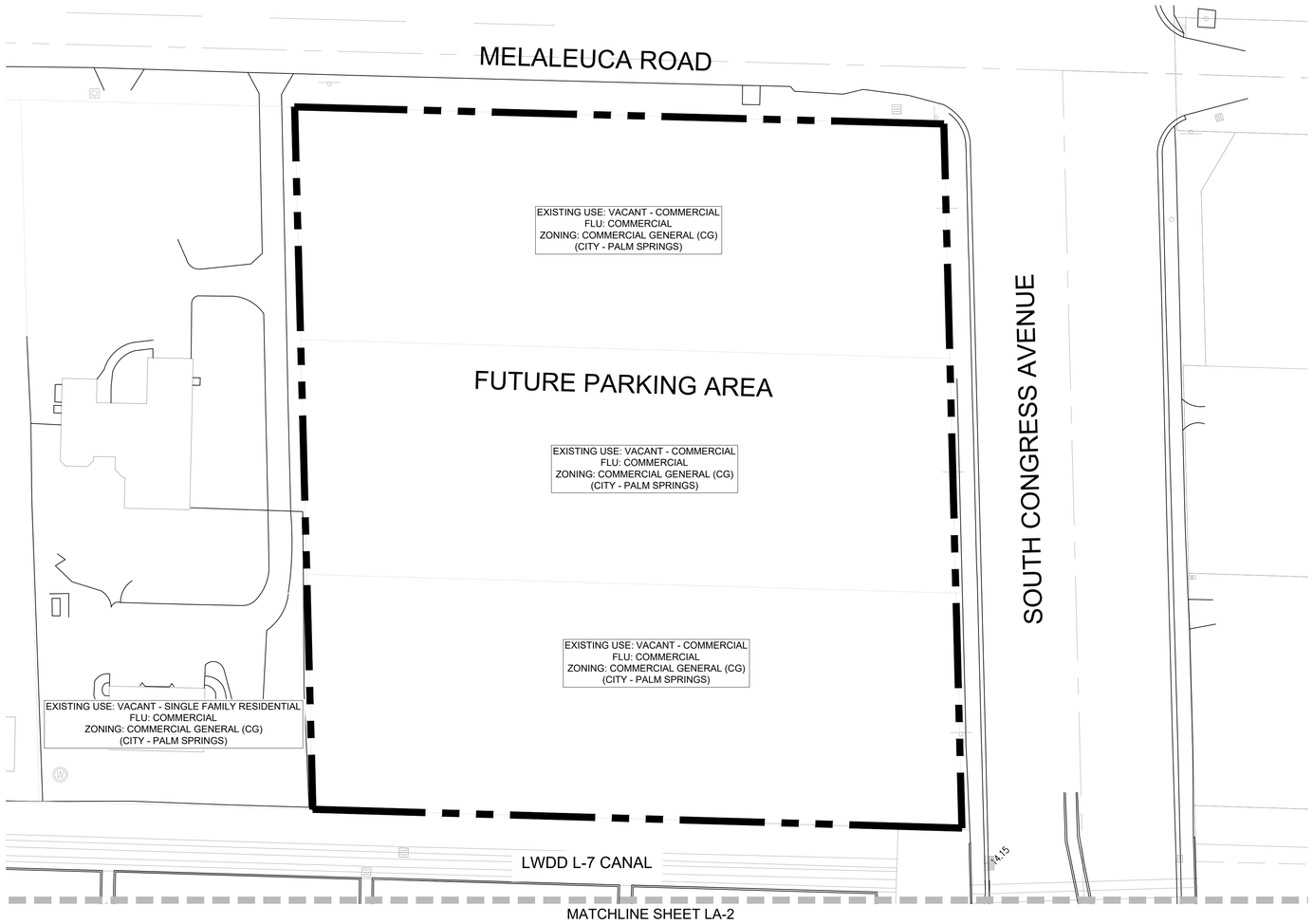

PLANT LEGEND

TREES	CODE	BOTANICAL / COMMON NAME
	BU	Bursera simaruba / Gumbo Limbo 12` Ht. x 2" Cal., 5' CT. Min., 5' Spr. Min. Single Straight Trunk, Full Canopy, No Crotch
	CB	Calophyllum brasiliense / Brazilian Beautyleaf 12` Ht. x 2" Cal., 5' CT. Min., 5' Spr. Min. Single Straight Trunk, Full Canopy, No Crotch
	CE	Conocarpus erectus / Buttonwood 12` Ht. x 2" Cal., 5' CT. Min., 5' Spr. Min. Single Straight Trunk, Full Canopy, No Crotch
	CS	Conocarpus erectus sericeus / Silver Button Wood 12` Ht. x 2" Cal., 5' CT. Min., 5' Spr. Min. Single Straight Trunk, Full Canopy, No Crotch
	ED	Elaeocarpus decipiens / Japanese Blueberry Tree 12` Ht. x 2" Cal., 5' CT. Min., 5' Spr. Min. Single Straight Trunk, Full Canopy, No Crotch
	IE	Ilex x attenuata `East Palatka` / East Palatka Holly 12` Ht. x 2" Cal., 5' CT. Min., 5' Spr. Min. Single Straight Trunk, Full Canopy, No Crotch
	MV	Magnolia viginiana / Sweetbay Magnolia 12` Ht. x 2" Cal., 5' CT. Min., 5' Spr. Min. Single Straight Trunk, Full Canopy, No Crotch
	QV	Quercus virginiana / Southern Live Oak 12` Ht. x 2" Cal., 5' CT. Min., 5' Spr. Min. Single Straight Trunk, Full Canopy, No Crotch
PALM TREES	CODE	BOTANICAL / COMMON NAME
	RR	Roystonea regia / Florida Royal Palm 12` Ht., 6` G.W., Single Trunk, Full Head, No Scarred Trunk
	SP	Sabal palmetto / Cabbage Palmetto 12`-16` Ct. Varying Heights, Hurricane Cut,
SHRUBS	CODE	BOTANICAL / COMMON NAME
	CHR	Chrysobalanus icaco `Red Tip` / Red Tip Cocoplum Min. 7 Gal. 36" Ht. x 24" Spr. 24" O.C. Full and Dense Shrub, Full to Base
	COE	Conocarpus erectus / Green Buttonwood Min. 15 Gal. Cont., 5` Ht., 30" spr., 30"o.c. Full Dense Shrub
	CON	Conocarpus erectus sericeus / Silver Button Wood Min. 7 Gal. 36" Ht. x 24" Spr. 24" O.C. Full and Dense Shrub, Full to Base
LARGE SHRUBS	CODE	BOTANICAL / COMMON NAME
	POD	Podocarpus macrophyllus / Podocarpus Min. 5` Ht. x 24" Spr., 36" O.C., Full to Base and Dense
SHRUB AREAS	CODE	BOTANICAL / COMMON NAME
	COD	Codiaeum variegatum `Mammey` / Mammey Croton Min. 3 Gal. 30" Ht., 18" Spr., 24" O.C. Full dense shrub,
	FGI	Ficus microcarpa `Green Island` / Green Island Ficus Min. 3 Gal. 30" Ht., 18" Spr., 24" O.C. Full dense shrub,
	JUN	Juniperus chinensis `Parsonii` / Parsoni Juniper* Min. 3 Gal. 30" Ht., 18" Spr., 24" O.C. Full dense shrub,
GRASSES	CODE	BOTANICAL / COMMON NAME
	DIA	Dianella tasmanica `Variegata` / Flax Lily Min. 3 Gal. 30" Ht., 18" Spr., 24" O.C. Full dense shrub,
	LIR	Liriope muscari `Emerald Goddess` / Liriope Min. 3 Gal. 30" Ht., 18" Spr., 24" O.C. Full dense shrub,
	SPA	Spartina bakeri / Sand Cord Grass 1 Gal., 24" Ht. x 22" Spr., 36" O.C., Fully Rooted and Dense
	FAK	Tripsacum dactyloides / Fakahatchee Grass Min. 3 Gal. 30" Ht., 18" Spr., 24" O.C. Full dense shrub,
SOD / MULCH	CODE	BOTANICAL NAME / COMMON NAME
NO SYMBOL	SOD	Stenotaphrum secundatum 'Floratam' / ST. Augustine Sod 'Floratam' 2" Thick Mat and Fully Rooted, Disease and weed free, laid tightly, Stagger Joints
NO SYMBOL	BAHIA SOD	Paspalum notatum / Bahia Grass Disease and weed free, laid tightly, rolled and sanded to level lawn
NO SYMBOL	MULCH	GRENSMART ECO-MULCH / Eco-Mulch Depth of 3" After Settling, Free of Weeds & Pests. Contractor to Determine Quantity of Mulch

urban design studio
Urban Design
Land Planning
Landscape Architecure
610 Clematis Street, Suite CU02
West Palm Beach, FL 33401
561.366.1100 FAX 561.366.1111
www.udsflorida.com
#LA0001739

Copyright:
All ideas, designs, arrangements, and plans represented by this drawing are owned by and the property of the designer, and were created for the exclusive use of the specified project. These ideas, designs, arrangements or plans shall not be used by, or disclosed to any person, firm, or corporation without the written permission of the designer.

Oxygen Development

Palm Springs, Florida
Landscape Plan

Drawing name: H:\JOBS\Oxygen Development_07-066\Oxygen_SPR_2022\Drawings\Landscape Plan\2022-10-27_LP_Resubmittal.dwg

NORTH

0 15' 30' 60'

Scale: 1" = 30'-0"

DESIGN DEVELOPMENT

Date:	05.16.2022
Project No.:	07-066.002
Designed By:	JEB
Drawn By:	JEB
Checked By:	WT

Revision Dates:

05.16.2022 SUBMITTAL
07.29.2022 RESUBMITTAL
09-09-2022 RESUBMITTAL
09-20-2022 RESUBMITTAL
10-27-2022 RESUBMITTAL

LA-4
of 6

NOTES:
1. ALL TREES SHALL MEET FLORIDA #1 OR BETTER STANDARDS.
2. REMOVE ALL NON-ORGANIC BINDING AND SHIPPING MATERIAL FROM THE TREE AND ROOT BALL.
3. ANY PRUNING SHALL BE COMPLETED AT THE DIRECTION OF THE OWNER OR LANDSCAPE ARCHITECT.
4. NO NAILS SHALL BE DRIVEN INTO TREE AND TRUNK SHALL BE FREE OF ANY MAJOR SCARS.
5. ADD FERTILIZER AS DIRECTED IN WRITTEN SPECIFICATIONS.

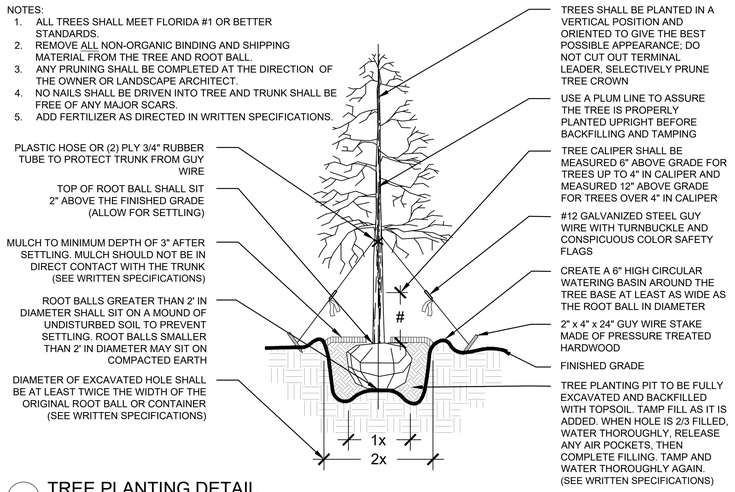

TREE PLANTING DETAIL
NOT TO SCALE

NOTES:
1. ALL SHRUBS SHALL MEET FLORIDA #1 GRADE OR BETTER STANDARDS.
2. REMOVE ALL NON-ORGANIC BINDING AND SHIPPING MATERIAL FROM THE SHRUB AND ROOT BALL.
3. ANY PRUNING SHALL BE COMPLETED AT THE DIRECTION OF THE OWNER OR LANDSCAPE ARCHITECT.
4. ADD FERTILIZER AS DIRECTED IN WRITTEN SPECIFICATIONS.

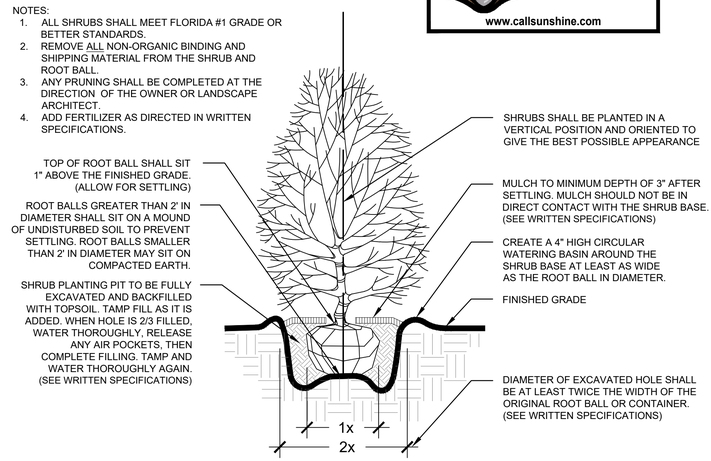

LARGE SHRUB PLANTING DETAIL
NOT TO SCALE

811 KNOW WHAT'S BELOW ALWAYS CALL 811 BEFORE YOU DIG
It's fast. It's free. It's the law.
www.callsunshine.com

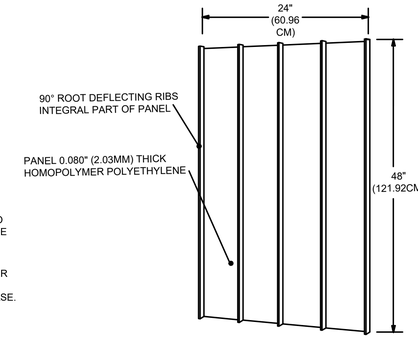

UB 48-2 SPECIFICATIONS
48" DEEPROOT TREE ROOT BARRIER

SPECIFIED TREE ROOT BARRIERS ARE A MECHANICAL BARRIER AND ROOT DEFLECTOR TO PREVENT TREE ROOTS FROM DAMAGING HARDSCAPES, AND LANDSCAPES. ASSEMBLED IN 2 FOOT (61 CM) LONG MODULES TO CREATE VARYING LENGTHS FOR LINEAR APPLICATION DIRECTLY BESIDE A HARDSCAPE ELEMENT, ADJACENT TO ONE SIDE OF A TREE, OR FOR LARGE PERIMETER SURROUND APPLICATIONS WITH A MINIMUM 8 FOOT (2.43 M) DIAMETER USING 12 PANELS.

A. MATERIALS
1. THE CONTRACTOR SHALL FURNISH AND INSTALL TREE ROOT BARRIERS AS SPECIFIED. THE TREE ROOT BARRIERS SHALL BE EITHER PRODUCT UB 48-2 AS MANUFACTURED BY DEEPROOT PARNTERS, L.P., 81 LANGTON STREET, SUITE 4, SAN FRANCISCO, CA 94103 (800.458.7668), OR APPROVED EQUAL. THE BARRIER SHALL BE BLACK, EXTRUDE PANELS, OF 0.80" (2.03MM) WALL THICKNESS IN MODULES 24" (61CM) LONG 48" (122 CM) DEEP; MANUFACTURED WITH HOMOPOLYMER POLYETHYLENE WITH ADDED ULTRAVIOLET INHIBITORS; RECYCLABLE. EACH 2 FOOT (61CM) SECTION SHALL HAVE:

NOT LESS THAN 4 MOLDED INTEGRAL VERTICAL ROOT DIRECTING RIBS OF A MINIMUM 0.080" (2.03MM) THICKNESS PROTRUDING 1/2" (12.7MM) AT 90° FROM INTERIOR OF THE BARRIER PANEL, SPACED 6" (154 MM) APART.
SEE PANEL DRAWING.

AN INTEGRATED JOINING SYSTEM PROVIDING FOR INSTANT ASSEMBLY BY SLIDING ONE PANEL INTO ANOTHER.

B. CONSTRUCTION AND INSTALLATION
1. THE CONTRACTOR SHALL INSTALL THE TREE ROOT BARRIERS WITH THE NUMBER OF PANELS AND IN THE MANNER SHOWN ON THE DRAWINGS. THE VERTICAL ROOT DIRECTING RIB SHALL BE FACING INWARDS TO THE ROOT BALL AND THE TOP EDGE SHALL BE 1/2" TO 1" ABOVE GRADE. EACH OF THE REQUIRED NUMBER OF PANELS SHALL BE JOINED IN A LINEAR FASHION AND PLACED ALONG THE ADJACENT HARDSCAPE OR WHERE SPECIFIED TO FORM A CIRCLE AROUND THE ROOT BALL.

2. EXCAVATION AND PREPARATION SHALL CONFORM TO THE DRAWINGS.

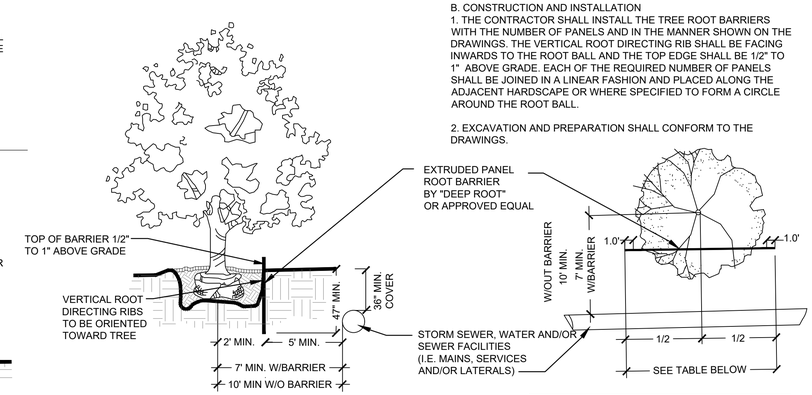

ROOT BARRIER LENGTH		
SMALL TREE	16'	(8 PANELS)
LARGE TREE	24'	(12 PANELS)
PALM TREE	12'	(6 PANELS)

LANDSCAPE AND ROOT BARRIER NOTE:

TREES SHOWN ON THIS PLAN ARE FOR GRAPHIC REPRESENTATION ONLY. TREE SPACING IS BASED ON DESIGN REQUIREMENTS AND THE TREES SHOWN ON THESE PLANS ATTEMPT TO ACCOMPLISH THAT SPACING WHILE MAINTAINING THE REQUIRED SETBACKS FROM UTILITIES AND OTHER INFRASTRUCTURE. TREES MAY BE FIELD ADJUSTED TO AVOID CONFLICTS WITH DRIVEWAYS AND UNDERGROUND UTILITIES. IN ANY CASE THE TREES SHALL BE LOCATED IN THE FIELD IN ACCORDANCE WITH THE PLANTING DETAILS SHOWN HEREON.

ADDITIONALLY, TREES ARE TO BE INSTALLED WITH A TEN FOOT (10') SEPARATION FROM ANY STORM SEWER, WATER AND OR SEWER MAIN AND/OR SERVICE, HYDRANTS, AND LIFT STATIONS. IF A TEN FOOT (10') SEPARATION CANNOT BE ACHIEVED, THE TREE CAN BE INSTALLED WITH A ROOT BARRIER SYSTEM. REFER TO THE "ROOT BARRIER" DETAIL FOR INSTALLATION REQUIREMENTS. HOWEVER, IN NO CASE SHALL A TREE ENCROACH INTO A UTILITY EASEMENT WITHOUT PRIOR APPROVAL FROM THE UTILITY PROVIDER AND ONLY SOD CAN BE INSTALLED WITHIN 7.5' OF A FIRE HYDRANT UNLESS PRIOR APPROVAL BY THE FIRE MARSHAL AND UTILITY PROVIDER.

ROOT BARRIER DETAIL
NOT TO SCALE

urban design studio
Urban Design
Land Planning
Landscape Architecure

610 Clematis Street, Suite CU02
West Palm Beach, FL 33401
561.366.1100 FAX 561.366.1111
www.udsflorida.com
#LA0001739

Copyright:
All ideas, designs, arrangements, and plans represented by this drawing are owned by and the property of the designer, and were created for the exclusive use of the specified project. These ideas, designs, arrangements or plans shall not be used by, or disclosed to any person, firm, or corporation without the written permission of the designer.

NOTES:
1. ALL TREES SHALL MEET FLORIDA #1 OR BETTER STANDARDS
2. REMOVE ALL NON-ORGANIC BINDING AND SHIPPING MATERIAL FROM THE TREE AND ROOT BALL.
3. ANY PRUNING SHALL BE COMPLETED AT THE DIRECTION OF THE OWNER OR LANDSCAPE ARCHITECT.
4. NO NAILS SHALL BE DRIVEN INTO TREE AND TRUNK SHALL BE FREE OF ANY MAJOR SCARS.
5. ADD FERTILIZER AS DIRECTED IN WRITTEN SPECIFICATIONS.

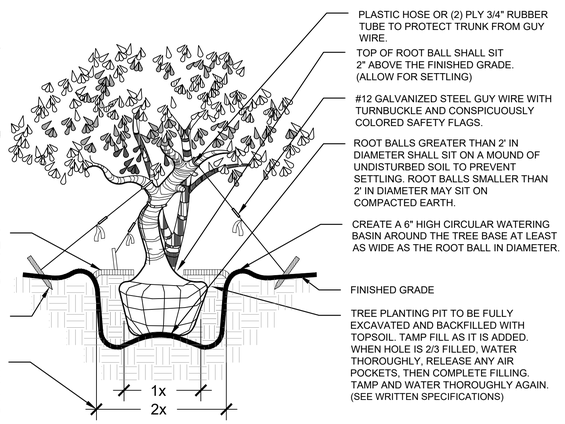

IRREGULAR & MULTI-STEM TREE PLANTING DETAIL
NOT TO SCALE

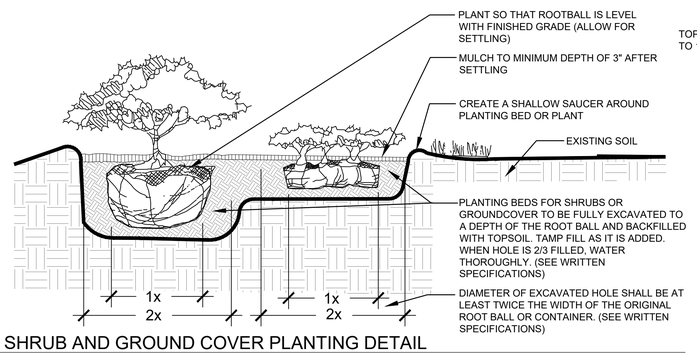

SHRUB AND GROUND COVER PLANTING DETAIL
NOT TO SCALE

NOTES:
1. ALL PALMS SHALL MEET FLORIDA #1 GRADE STANDARDS OR BETTER
2. REMOVE ALL NON-ORGANIC BINDING AND SHIPPING MATERIAL FROM THE PALM AND ROOT BALL.
3. NO NAILS SHALL BE DRIVEN INTO PALM AND TRUNK SHALL BE FREE OF ANY MAJOR SCARS.
4. ADD FERTILIZER AS DIRECTED IN WRITTEN SPECIFICATIONS.

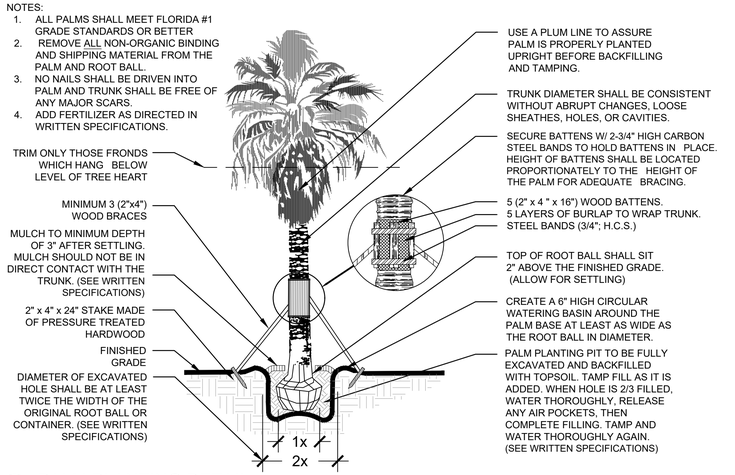

PALM PLANTING DETAIL
NOT TO SCALE

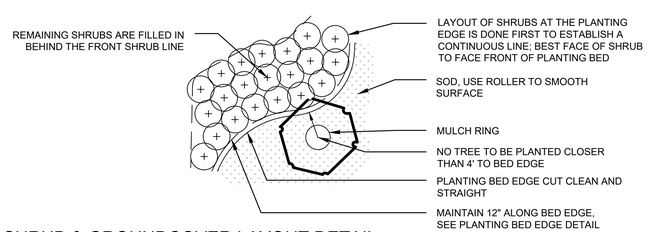

SHRUB & GROUNDCOVER LAYOUT DETAIL
NOT TO SCALE

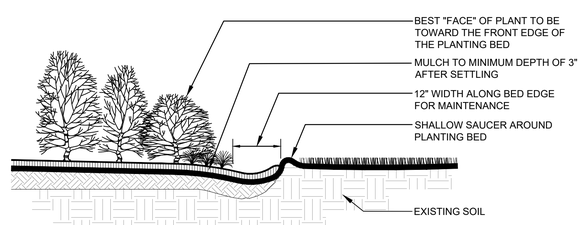

PLANTING BED EDGE DETAIL
NOT TO SCALE

NOTES:
1. MULCH RINGS SHALL BE PROVIDED FOR ALL TREES AND PALMS PLANTED IN SODDED AREAS OR AS OTHERWISE NOTED ON LANDSCAPE PLAN.

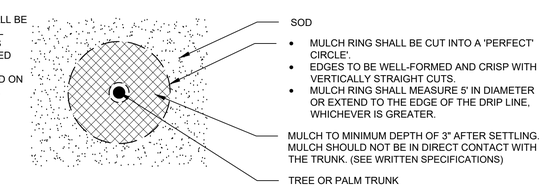

MULCH RING IN SOD DETAIL
NOT TO SCALE

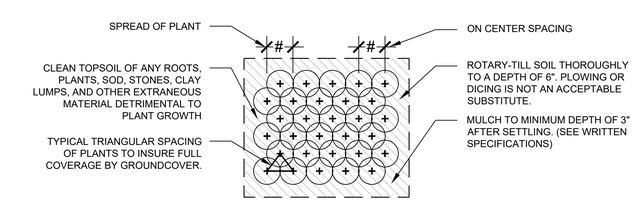

GROUND COVERS & ROOTED CUTTING PLANTING DETAIL
NOT TO SCALE

Oxygen Development
Palm Springs, Florida
Landscape Details

DESIGN DEVELOPMENT

Date:	05.16.2022
Project No.:	07-066.002
Designed By:	JEB
Drawn By:	JEB
Checked By:	WT

Revision Dates:
05.16.2022 SUBMITTAL
07.29.2022 RESUBMITTAL
09-09-2022 RESUBMITTAL
09-20-2022 RESUBMITTAL
10-27-2022 RESUBMITTAL

LA-5
of 6

Drawing name: H:\JOBS\Oxygen Development_07-066\Oxygen_SPR_002\Drawings\Landscape Plan\2022-10-27_LP_Revs\Initial.dwg

SECTION 02950
TREES, SHRUBS AND GROUND COVER

PART I - GENERAL

By bidding on this project and/or signing a contract for landscape work, the Contractor acknowledges that he/she has read and understood these specifications in their entirety, that he/she has inspected the site, and that he/she will abide by all plans, specifications, and conditions found herein. Any perceived conflicts or concerns within the specifications or on the plant list, including unavailability of materials, are to be brought to the attention of the Landscape Architect prior to bid submission.

1.01 WORK INCLUDED

A. Contractor shall obtain or ensure that all necessary permits have been granted to the Owner for work on the Owner's properties or in any adjacent easements prior to commencement of work.
B. All planting and construction work shall be executed as shown on the provided drawings, schedules, and specifications.
C. Any additional work or materials required to install landscape elements as called for on the plans, specifications or plant list shall be provided and installed by the Contractor.
D. Finish Grade Elevations: 2 inch below top of pathway edging.
E. The Contractor shall be entirely responsible for all work until final acceptance by the Owner. The Contractor shall protect all materials and work against injury and shall provide and maintain all necessary guards for the protection of the public. He shall be held responsible for any negligence during the execution of the work.

1.02 QUALITY ASSURANCE

A. All work specified herein shall be performed by a single firm specializing in landscape work. The Landscape Architect and the Owner retain the right to approve any proposed subcontractors prior to awarding the contract.
B. Ship landscape materials with certificates of inspection required by governing authorities. Comply with all regulations applicable to landscape materials.
C. Package standard products with manufacturers certified analysis. For other materials, provide analysis by recognized laboratory made in accordance with methods established by the Association of Official Agricultural Chemists, wherever applicable.
D. Provide trees, palms, shrubs and groundcover grown in a recognized nursery in accordance with good horticultural practice. Materials must be healthy and vigorous, free of disease, insects, eggs, larvae, and defects such as decay, rot, knots, sun scald, injuries, abrasions, and poor or unusual form. No collected material will be permitted unless specific written approval is granted.
E. Do not make substitutions. If specified landscape material is not available at time of planting, submit proof of non-availability and provide a list of proposed equivalent material. Once authorized, adjustments to the contract will be made. Owner is not financially responsible for unauthorized substitutions.
F. Plant materials of larger size than specified may be used if acceptable to Landscape Architect and if sizes of root balls are increased proportionately. Installation of larger sizes will not increase contract amount unless specifically authorized by Owner.
G. Owner and Landscape Architect reserve the right to inspect, approve or reject at any time plant materials or work either at the nursery or at the site which does not meet the condition in the plans, plant list or specifications.
H. The Contractor shall be responsible for planting the landscape in complete accordance with all applicable codes, ordinances, and laws. Any modification made to conform with said codes, laws and ordinances, after the bid is awarded, shall be completed at the Contractor's expense at no additional cost to the Owner.

1.03 SUBMITTALS

A. Certification: Submit certificates of inspections as required by governmental authorities, and manufacturers or vendor's certified analysis for soil amendments and fertilizer materials. Submit other data substantiating that materials comply with specified requirements.
B. Submit seed vendor's certified statement for each grass seed mixture required, stating botanical and common name, percentage by weight, and percentage of purity, germination, and weed seed for each grass seed species.
C. Planting Schedule: Submit planting schedule showing schedule dates for each type of planting in each area of site.
D. Maintenance Instructions: Submit typewritten procedures for maintenance of landscape work, through final acceptance.

1.04 DELIVERY, STORAGE AND HANDLING

A. Packaged Materials: Deliver packaged materials in original containers showing manufacturer's guaranteed weight analysis and name of manufacturer. Protect materials from damage and deterioration during delivery and storage.
B. Trees, shrubs, and ground covers: Provide freshly dug trees, palms, and shrubs. Do not prune prior to delivery. All plants shall be handled and stored so that they are adequately protected from drying out, from sun or wind burn, and from any other injury at all times. Any plant determined to be wilted or burned may be rejected at any time, whether in the ground or not. Plants shall be handled only by their containers or root balls, not by stems or trunks. Trees that are scraped or scarred during delivery, storage, or planting will be rejected. The on-site storage area shall be approved prior to the delivery of any plant materials. Do not bend or bind plants in such a manner as to damage bark, break branches, or destroy natural shape. Provide protective covering during delivery.
C. Deliver plant materials after preparations for planting are complete, and plant immediately. Roots or balls of all plants shall be adequately protected at all times from sun and/or wind. Balled and burlapped (B&B) plants that cannot be planted immediately upon delivery shall be set on the ground and protected by having soil, wet peat, or other acceptable material covering the roots or balls keeping them moist.
D. Do not remove container grown stock from containers until planting time.
E. Label at least one tree, one palm and one shrub of each variety with a securely attached waterproof tag bearing legible designation of botanical and common name, if requested by Owner.
F. Sod: Time delivery so that sod will be placed within 24 hours after stripping. Protect sod against drying and breaking of rolled strips.

1.05 JOB CONDITIONS

A. Proceed with and complete landscape work as rapidly as portions of site become available.
B. Utilities: Determine location of overhead and underground utilities and perform work in a manner which will avoid possible damage. Hand excavate, as required. Forty eight (48) hours prior to digging, call the appropriate Utility Authority to have all utilities identified and marked in order to avoid conflicts.
C. Protection of Existing Structures: All existing buildings, walks, walls, paving, piping, and other items of construction and planting already completed or established shall be protected from damage. All damage resulting from negligence shall be repaired or replaced, including but not limited to marks on pavers and cracks within existing walkways caused by the Contractor. The Owner may, at his discretion have any damage repaired by others and subsequently costs back-charged to the Contractor.
D. Protection of Existing Plant Material: The Contractor shall be responsible for all unauthorized cutting or damage to existing trees or shrubs caused by careless operation of equipment, stockpiling of materials, etc. This shall include compaction by driving or parking inside the drip-line of any tree, or spilling of oil, gasoline, or other deleterious materials within the drip-line of any tree. No materials shall be burned.
E. Excavation: When conditions detrimental to plant growth are encountered, such as rubble fill, adverse drainage conditions, or obstructions, notify Landscape Architect before planting.

PART II - PRODUCTS

2.01 TOPSOIL

A. The Contractor is required to obtain a soil sample and perform a soil analysis test to determine the existing soil composition and conclude whether it complies with the composition criteria below.
B. Where topsoil does not meet the specified limits within the project site, it shall be furnished. Throughout all parts of site where finish grades and contour lines differ from existing contour lines, bring to finish grade contours shown on "Grading Plan."
C. Topsoil shall be friable, fertile soil with representative characteristics of local soils. It shall be free of heavy clay, marl, stone, extraneous lime, plant roots, refuse and/or solid waste, sticks, brush, construction demolition debris, and any other deleterious materials. There shall be no noxious weeds or weed seeds (i.e., nut grass, Bermuda grass and the like). In no case shall there be more than five percent (5%) by dry weight of clay lumps or stones larger than 1". It shall test in the pH range of 6.0 to 7.2 and shall contain no substance that will impede plant growth. The Contractor shall have topsoil laboratory-tested at his expense and approved by Landscape Architect or Owner prior to material delivery.

Topsoil shall conform to the following specifications:

COMPONENTS	DRY WEIGHT MEASURE	PARTICLE SIZE
Organic Matter	2% - 7%	
Silt/Clay	2% - 10%	< 0.074 mm
Sand	85% - 98%	0.075 - 3.00 mm
Gravel	0% - 5%	4.75 mm - 1 inch

The analysis shall also show the following ranges:

Soluble salt	.2 - 1.0mmmhos/cm
Nitrogen	25-150 PPM
Phosphorus	26 - 39 PPM
Potassium	50 - 250 PPM
Calcium	500 - 2500 PPM
Magnesium	50 - 500 PPM
Iron	2.5 - 25 PPM
Manganese	2.5 - 25 PPM
Zinc	2.5 - 25 PPM
Copper	1.3 - 5 PPM
Boron	0.5 - 1.5 PPM
Sulphur	15 - 200 PPM
Chlorine	less than 100 PPM
Sodium	less than 10
Nematodes	none

2.02 SOIL AMENDMENTS AND FERTILIZERS

A. Peat Moss: Peat moss shall be a commercial, baled sphagnum material, free of woody material, minerals, or foreign matter, with a pH range of 3.0 - 5.5.
B. Sand: Sand shall be clean, sharp, and free of all deleterious material.
C. Lime: Natural limestone (Dolomite) containing not less than 85% of total carbonates, ground so that not less than 90% passes a 10-mesh sieve and not less than 50% passes a 100-mesh sieve.
D. Humus Soil Conditioner: Consisting of yard trimmings and biosolids co-compost.
E. Fertilizer: Fertilizer shall be a commercial grade, granular, slow release "pre-plant" type fertilizer.
1. Fertilizer shall be delivered to the site in the original unopened container, bearing the manufacturer's guaranteed analysis. Any opened, caked, or damaged fertilizer will be rejected.
2. Tree, palm, shrub and grass fertilizer shall be "UF (University of Florida) Formulated" product 8-2-12 or 8-2-13 with minor elements as an all-purpose fertilizer, or equal, and applied according to the manufacturer's direction.
3. Application of fertilizer shall be consistent with the current recommendations of the Green Industries - Best Management Practices.
4. Fertilizer shall be applied by an individual who has successfully completed the GI-BMP program and holds a current Urban Fertilizer License or as required by the State and Local Ordinances.

2.03 WATER

A. All water necessary for planting and maintenance shall be of satisfactory quality to sustain adequate growth of plants and shall not contain harmful, natural or man-made elements detrimental to plants.

2.04 OTHER LANDSCAPE PRODUCTS

A. Mulch: Mulch shall be shredded Melaleuca, Eucalyptus, Grade "A" Pine Bark Nuggets, or approved equal, free of foreign materials and weed seeds. Minimum depth after settling shall be 3".
B. Guying and Bracing: Tree guying and bracing shall be the responsibility of the Contractor in accordance with the planting details to insure stability and maintain plants in an upright position.
C. Anti-desiccant: Anti-desiccant shall be "Wiltpruf" or equal, if specified on plans.
D. Tree Wound Paint: Tree wound paint shall be an asphaltic base paint containing an antibacterial agent, specially prepared for tree surgery work.
E. Super Absorbent Polymer: "Terra Sorb" or approved equal as packaged in 3 oz. Handy Pac composed of synthetic acriamide copolymer, potassium, acrylate. Particle size of 1.0 mm to 3.0 mm and absorption rate of 300 times its weight in water, if specified on plans.

Apply dry, using the following amounts:
1. For trees and palms up to 36" diameter root ball, use one 3 oz. Handy Pac.
2. For trees and palms over 36" diameter root ball use two 3 oz.
3. Handy Pacs. Broadcast throughout planting hole and backfill as per manufacturers specifications.

For container grown plants:

Container Size	Application Rate
1 Gallon	1 Handy Pac / 9 Containers
3 Gallons	1 Handy Pac / 4 Containers
7-10 Gallons	1 Handy Pac / 2 Containers
20 Gallons	1 Handy Pac / 1 Container

2.05 PLANT MATERIAL

A. Plant list is part of this specification section. The Contractor shall be responsible for furnishing and installing all plant materials shown on the drawings and plant list. In case of conflict between the two documents, the drawings shall rule.
B. Quality: Trees, palms, shrubs, and other plants shall be Florida #1 or better as defined in the latest edition of Grades and Standards for Nursery Plants, Florida Department of Agriculture and Consumer Services. Multi-trunked trees will not be accepted unless they are specifically specified in the planting plans. All plants shall have a normal habit of growth and shall be sound, healthy, and vigorous. Trees shall have normal well-developed branching structures and vigorous root systems that are not root or container bound.

1. Balled and burlapped plants (BB or b&b) shall be dug with firm, natural balls of earth, of sufficient depth and diameter to include the fibrous and feeding roots. Plants with cracked, dry, or broken balls will not be accepted, nor will plants with root balls of insufficient size.
2. All plants, other than those collected on site, shall be nursery grown in accordance with good horticultural practices and under climatic conditions similar to the site for at least two years. Transplanting or root pruning shall have taken place during growth.

C. Size: Plant sizes shown in the plant list are minimums. When a plant size is given by height and spread or by container size, all specifications are minimums to be met or exceeded. All trees and shrubs shall be measured when their branches are in a normal position. Spread dimensions specified refer to the main body of the plant and not from extreme branch tip to tip. Height is measured from the soil line to the average height of the canopy. Measurement does not include any terminal growth; the container or root ball is also not included.

Unless otherwise specified, the determining measurement for trees shall be caliper, which shall be measured 6" above the ground for trees up to 4" in caliper, and 12" above the ground for trees over 4" caliper.

2.06 GRASS MATERIALS

A. Types: Sod type shall be as specified on the provided landscape plan and associated plant schedule.
B. Dimensions: The sod shall be taken up in commercial size rectangles, preferably 12-inch x 24-inch.
C. Measurement: Sod shall be measured on the basis of square footage. Contractor shall be responsible for complete coverage based on the square footage shown on plans; therefore, Contractor shall factor in cutting and shrinkage of materials.
D. The sod shall be sufficiently thick to provide a dense stand of live grass. The sod shall be live, fresh and uninjured, at the time of planting. It shall be a soil mat of sufficient thickness, at least 2" thick, adhering firmly to the roots to withstand all necessary handling. It shall be free of weeds and other grasses. It shall be planted as soon as possible after being dug, and shall be shaded and kept moist from the time it is dug until it is planted. After approval, the area from which the sod is to be harvested shall be closely mowed and raked as necessary to remove excessive top growth and debris.

2.07 REJECTION, SUBSTITUTION, AND RELOCATION

A. All plants not conforming to the requirements herein specified shall be considered defective and such plants shall be marked as rejected and removed from the site whether in the ground or not, at the Contractor's expense. Such removal shall take place immediately and new plants shall be brought in as replacements. The plant materials must meet all applicable inspections required by law.
B. The Owner or Landscape Architect also reserves the right to require that plants be relocated after installation if their initial installation does not conform to the plans or the intent of the plans, or if the original location poses an unforeseen threat to other facilities, human life, health, or safety, or to site utilities. Such relocation shall be at the Contractor's expense.

PART III - EXECUTION

3.01 GENERAL

A. Proceed with and complete landscape work as rapidly as portions of the site become available.
B. No planting shall be done until all operations in conjunction with the installation of the sprinkler system have been completed, final grades have been established, planting areas have been properly graded and prepared.
C. Adverse Conditions: When conditions potentially detrimental to plant growth are encountered during work, such as rubble or refuse fill, adverse drainage conditions, or obstructions, notify Owner or Landscape Architect before planting.
D. Work Scheduling: Work is to be scheduled to establish a logical sequence of steps for completion of each type and phase of landscape work, in such a way as to correspond with, and avoid damage and conflict with, other disciplines on site.
E. Coordination with Sod/Lawn: Plant trees, palms, and shrubs only after final grades are established, and prior to sodding or lawn establishment. If such planting must be done after lawn work, protect lawn/sod areas during planting and promptly repair any resulting damage.
F. Timing:
1. Planting work shall not be started until the final subgrade has been established, berms have been constructed and fine finished grading completed.
2. Under no conditions shall work be done if weather or soil conditions are not satisfactory.
G. Clean-up:
1. At all times during the construction and installation, the site shall be maintained in a clean, orderly and safe condition. Streets and pavements shall be kept clean. Materials and equipment for planting work shall be limited to the quantity required for the particular phase of work currently underway on the job site.
2. Protect landscape work and materials from damage due to landscape installation and maintenance operations, operations by other contractors and trades, and trespassers. Maintain protection during installation, Maintenance and Establishment periods. Treat, repair or replace damaged landscape work as directed.

3.02 SOIL PREPARATION

A. Grading and soil preparation work shall be performed only during periods when best results can be obtained. If the moisture content of the soil is high enough that work would damage soil structure, grading and tilling operations shall be suspended.

B. Before mixing in soil amendments, clean topsoil of roots, plants, sods, stones, clay lumps, and other extraneous materials harmful or toxic to plant growth. Apply Herbicide for weed control as needed.
C. Mix specified soil amendments and fertilizers with topsoil at rates specified. Delay mixing of fertilizer if planting will not follow placing of planting soil within a few days.
D. For planting beds, mix planting soil either prior to planting or apply on surface of topsoil and mix thoroughly before planting.

1. Mix lime with dry soil prior to mixing of fertilizer.
2. Prevent lime from contacting roots of acid-loving plants.

E. Unless drawings indicate otherwise, berms shall not exceed a 3:1 slope. Berms near buildings or in potentially troublesome drainage situations shall be checked for correct drainage by the project Engineer or Owner prior to planting.
F. Tree and shrub planting beds which fall within or near parking lot areas shall be completely excavated and back-filled with topsoil. All shell-rock or other base materials, and all subsoil and debris, shall be completely removed from beneath such planting areas, to a minimum depth of 24".
G. All tree and/or shrub planting areas within 36" of building foundations, and any other planting areas where significant buried construction debris is encountered, shall be excavated to a minimum depth of 24" and backfilled with topsoil as specified elsewhere in these specifications.

3.03 TILLING

A. Before mixing, clean soil of roots, plants, clay lumps, stones in excess of 1" in diameter, and other extraneous or potentially harmful materials.
B. After all soil conditioning (and topsoil if called for on plans) has been spread at specified rates, the areas to be planted should be thoroughly rotary-tilled to a depth of six (6) inches. Plowing or dicing is not an acceptable substitute for rotary-tilling.

1. If the sprinkler system is installed after grading and tilling is completed, the backfill shall be retilled in the affected areas.
2. When the subsoil, grading, topsoil addition, soil conditioning, and tilling have been accomplished, all areas so treated shall be compacted and settled by application of heavy irrigation to a minimum depth of twelve (12) inches. Erosion scars shall be repaired.

3.04 FINE FINISH GRADING

A. When preliminary grading has been completed and the soil has dried sufficiently to be readily worked, all lawn and planting areas shall be graded to the elevations indicated on the Engineering Plans. The top four (4) inches shall be completely free of stones larger than one (1) inch. Grades not otherwise indicated shall be uniform levels or slopes between points where elevations are given. Positive drainage away from buildings shall always be maintained. Surface drainage shall be directed as indicated on the drawings by remodeling surfaces to facilitate the natural run-off of water. All depressions where water will stand, all voids, erosion, settled trenches and excavations, and all ridges and rises shall be amended and/or removed leaving a smooth, even finish grade. If additional amended topsoil is required to accomplish the intent of this specification, it shall be according to the foregoing specifications for topsoil.

1. All area shall be graded so that the final grades are 2" below adjacent paved areas, sidewalks, valve boxes, mowing strips, clean-outs, drains, etc., with appropriate adjustments for varying sod thicknesses. The intent is for water always to drain away from paving into lawn/sod areas.
2. Eliminating all erosion scars prior to beginning planting.
3. The Owner and/or his representative shall approve all final finish grades prior to planting.

B. Prior to fine grading or the installation of plant material the Contractor shall obtain certification that the project area is at the grade levels proposed by the Civil Engineer or Landscape Architect from a licensed Surveyor. The Contractor shall fine grade the lawn and planting areas to bring the rough grade up to final finished grade allowing for thickness of sod and/or mulch depth.

3.05 PLANTING TREES AND PALMS

A. Layout individual tree locations and areas for multiple plantings. Stake all locations and outline areas, then secure Landscape Architect's acceptance before the start of planting work.
B. Prior to preparation of tree pits, ascertain the location of all electrical cables, all conduits, all utility lines, oil tanks and supply lines, so that proper precautions may be taken not to disturb or damage any existing conditions. Properly maintain and protect existing utilities. Should such underground or overhead obstructions be encountered that interfere with planting, the Contractor will inform the Landscape Architect or Owner's representative and shall be consulted as to the adjustment of the location of plants to clear such obstruction or the relocation of the obstruction.
C. Tree pit locations shall be staked by the Contractor and approved by the Owner or Landscape Architect before digging. Pits shall be excavated to the depth and width indicated and all subsoil removed.
D. Protect all areas from excessive compaction by foot traffic or machinery when bringing trees to the planting area.
E. All excavated holes shall have vertical sides with roughened surfaces and shall be of a size that is at least twice the width of the original plant container or ball. In all cases the holes shall be large enough to permit handling and planting without damage to the roots or root ball.
F. Excess soil shall be removed or utilized as directed by Owner or the Owner's representative. If the excess soil will not be used, it is the responsibility of the Contractor to remove and dispose of the discarded soil off site in an acceptable manner.
G. Tree pits shall be backfilled with a topsoil mixture as specified elsewhere in these specifications Palm tree pits will be backfilled with a mixture of up to 95% sand and 5% organic material.
H. Add fertilizer to tree pits as specified elsewhere in these specifications.
I. Set balled and burlapped stock on a layer of 50% native soil and 50% topsoil compacted to a 6" depth. Loosen burlap from top of sides of the ball but no burlap shall be pulled from underneath. Remove non-organic binding material (if any) from tree ball. Immediately cut any damaged roots with clean shears. Using a plumb to assure that the tree is properly upright, begin filling the hole and tamping the fill material. When the hole is 2/3 filled, water thoroughly and probe with a stick to be sure that no air pockets remain. Re-plumb, complete filling the hole, re-tamp, and water again.
J. Set container-grown stock as above, taking care not to damage roots when removing the container
K. During planting, do not cover the top of the root ball with the soil mixture. All rope, wires, burlap mesh etc., shall be removed from the root ball. No synthetic burlap is allowed on any plant material. Synthetic burlap is unacceptable for rootballs. Trees shall be planted so that the top of the root ball is 2" above final grade. Allow for settling. Any trees resting deeper or higher must be either reset or replaced at the discretion of the Owner or Landscape Architect; such work shall be at the Contractor's expense.
L. Create a watering basin around each tree at least as wide as the root ball in diameter formed by a circular ridge of soil at least 6" high.
M. Each planting basin shall be mulched to a minimum depth of 3" (after settling). Mulch shall not be applied until the tree has been thoroughly watered and two days have elapsed. Mulch should be placed so that it is not in direct contact with trunks.
N. All trees are to be staked or guyed per these specifications. All stakes shall be painted a conspicuous color or shall be flagged for visibility and public safety; guy wires shall be flagged.
O. Palms shall be planted per above specifications.

3.06 PLANTING SHRUBS, VINES, AND GROUND COVERS

A. The locations of all plants, bed outlines and all other areas to be planted shall be clearly marked with agricultural gypsum or landscape marking paint then approved by the Owner or Landscape Architect before any holes are dug.
B. No planting shall be done until the area concerned has been satisfactorily prepared in accordance with these specifications.
C. No more plants shall be distributed in the planting area on any work day than can be planted and watered in that day.
D. Unless otherwise indicated, all plants shall be planted in pits, centered as called for on the plant list, and set in 24" depth of topsoil as specified elsewhere in these specifications to such depth that the soil line of the plants will match the surrounding grade after settling. Plants shall be planted in a vertical position and oriented to give the best possible appearance or relationship to adjacent structures or features. Remove all inorganic containers or binding. All damaged roots shall be cut away cleanly. Planting soil shall be placed and compacted carefully to fill all voids and avoid root injury. When the hole is 2/3 filled, water thoroughly. The hole shall then be filled to finish grade and a shallow saucer shall be formed around each bed. After settling, soil shall be added as needed to bring the hole to grade level.
E. Azaleas and other ericaceous and acid-loving plants shall be backfilled with a mixture of 20% topsoil and 80% acid peat. They shall be set so that the bases of the plants are slightly higher than they grew in the container or nursery after settling. At no time shall lime in any form be brought into contact with the plants or their roots. Mulch with pine straw unless noted otherwise.
F. Add fertilizer to plants as outlined in section 2.02.
G. Vines shall be planted in pits containing at least 2 cubic feet of prepared topsoil. They shall be planted in the same manner as shrubs, and shall be mulched. Vine stems shall be fastened to walls, trellises, etc. as specified in the drawings.
H. Groundcover plants shall be laid out in their proposed planting locations without being removed from their containers after the soil is properly prepared per these specifications. Planting methodology is the same as for other shrubs.
I. Any plants which, after settling, rest significantly higher or even slightly lower than they grew in the nursery or container are subject to resetting or replacement at the discretion of the OWNER or Landscape Architect. Such work shall be at the Contractor's expense.
J. If called for in the plans, landscape edging shall be installed as specified.
K. All planting beds and individual plantings shall be mulched with a minimum of 3" (after settling) of mulch as specified in this document. Mulch shall be free of weed seeds and other foreign matter.

3.07 ANNUAL AND SEASONAL COLOR BEDS

A. Beds shall be mounded to a height 6" on top of the existing grade and composed of 50% topsoil and 50% compost.
B. Soil shall be covered with ½" - 1" deep layer of Pine Fines Mulch or comparable product.

3.08 PRUNING

A. All pruning shall be done in the presence of, and with the approval of, the Owner or Landscape Architect. Only clean, sharp tools designed for the purpose shall be used. The goal of pruning is always to preserve and enhance the natural character of the plant. Pruning shall be done per modern horticultural practice (see National Arborist Standards, latest edition).
B. Pruning shall be limited to the minimum necessary to remove injured twigs, branches, and fronds, to compensate for root loss suffered during digging and transplanting, and to thin and shape shrubs and trees. In no case shall more than 1/3 of the branching structure be removed. Damaged, scarred, frayed, split, or skinned twigs, branches, or limbs shall be pruned back to the next sound outside lateral bud, branch or limb. The terminal bud or leader shall never be removed.
C. Prune trees and shrubs to retain required height and spread. Remove the minimal amount of wood necessary on flowering trees and shrubs. Remove only dead or dying fronds from palms. Cuts over 3/4" in diameter shall be treated with tree wound paint; all exposed living tissue shall be covered.
D. Existing Trees: If indicated on drawings, Contractor shall prune and thin existing trees on site. The use of climbing spurs is prohibited. All diseased, dead branches and those interfering with healthy plant growth shall be removed. Also, remove root suckers, low branches, and any others as directed by the Owner or Landscape Architect. Cuts shall be flush with the trunk or limb and shall be painted with tree paint. Remove any nails, wires, etc. fastened to the tree.

3.09 PLANTERS - DECORATIVE OR STRUCTURAL

A. If specified, landscaping in planters shall be installed using the following method:

1. Install 4" deep layer of fine crushed stone in bottom of planter.
2. Install filter fabric over stone layer. Turn up edges of fabric all around.
3. Install planting soil mix over filter fabric to within 3½" of top for planter. Do not compact planting soil.
4. Install plant material as specified elsewhere in these specifications.
5. Install 3" of mulch over planting soil.

3.10 SODDING NEW LAWNS

A. The Contractor shall sod all areas indicated and noted on the drawings. No sodding shall occur until areas to be sodded are cleared of any rough grass, weeds and debris, the ground brought to an even grade and specified amendments have been added. See details for specific amendments as per sod type.
B. Whenever a suitable area has been graded and is ready for sodding the Contractor shall, when directed by the Landscape Architect, proceed at once with the sodding of the available areas. Sodding shall be incorporated into the project at the earliest practical time in the life of the contract. No sod which has been cut for more than seventy two (72) hours shall be used unless specifically authorized by the Landscape Architect or Owner after his careful inspection thereof. Any sod which is not planted within twenty four (24) hours after cutting shall be stacked in an approved manner and maintained properly moistened.
C. The sod shall be placed on the prepared surface, with edges in close contact, and shall be firmly and smoothly embedded by light tamping with appropriate tools. Sod shall be rolled with 1,000 lbs. roller unless waived by the Landscape Architect or Owner.
D. Where sodding is used in drainage ditches, sod panels shall be set in a staggered pattern, such as to avoid a continuous seam along the line of flow. Offsets of individual strips shall not exceed six (6) inches. At the inside of the curbs, sod shall abut squarely and evenly.
E. On areas where the sod may slide, due to height and slope, the Landscape Architect or Owner may direct that the sod be pegged, with pegs driven through the sod blocks into firm earth, at suitable intervals.
F. Any pieces of sod which, after placing, show an appearance of extreme dryness shall be removed from the work.
G. Where placement of new sod abuts existing sodded areas, new sod must be placed in such a manner as to produce an even transition to existing sodded areas.
H. It shall be the responsibility of the Contractor to bring the sod edge in a neat, clean manner to the edge of all paving and shrub areas.

PART IV MAINTENANCE, ESTABLISHMENT AND WARRANTY PERIODS

4.01 MAINTENANCE AND ESTABLISHMENT PERIOD

A. The Maintenance Period shall begin immediately after each plant is planted, and the Contractor shall continuously maintain all areas involved in this contract during the progress of the work.
B. The Establishment Period shall begin on the first day after all planting and installation of all landscape elements is completed and initially accepted. The Contractor shall continuously maintain all areas from initial acceptance until final acceptance by the Owner. The Establishment Period shall continue for not less than ninety (90) continuous calendar days. Hurricane cut Sabal Palms shall have an Establishment Period of not less than one hundred and eighty (180) continuous calendar days. The Establishment Period will end at the time the project is given final acceptance. An inspection shall be made by the Owner or Landscape Architect to accept the completed work and issue a determination of substantial completion. Inspections may be performed on all or partially completed phased work under the Contract, as directed by the Owner.
C. Maintenance of new plantings shall consist of, but not necessarily be limited to, pruning, watering, cultivating, weeding, mulching, tightening or replacing guys and stakes, resetting plants to proper grades or upright positions, furnishing and applying sprays as necessary to combat insects and disease, litter control, rolling, fertilizing and replanting.
D. Planting areas and plants shall be protected at all times against damage of any kind for the duration of the maintenance and establishment periods. If any plants are injured or damaged, they shall be treated or replaced as directed by the Owner or Landscape Architect at no additional cost. The Contractor is responsible for acts of vandalism or theft during the maintenance and establishment period unless this responsibility is assumed in writing by another party.
E. Restrict foot and vehicular traffic from all lawn and planting areas after seeding and planting operations. Erect signs and barriers if required and remove when lawn and plantings are well established and accepted by Owner.
F. The Contractor shall be responsible for maintaining adequate protection of the site. Areas damaged by the Landscape Contractor's men or equipment, or the men or equipment of his Subcontractor's, shall be repaired at the Landscape Contractor's expense.
G. The Contractor is responsible for keeping all plant materials adequately watered after installation even if the irrigation system is not operational. Plants shall receive a thorough watering immediately after planting. Afterwards, plants shall be watered during the maintenance and establishment periods per the requirements set forth in "Water Requirements for Newly Planted Grass, Ground Covers, Shrubs and Trees in Florida", distributed by South Florida Water Management District. In those areas where a permanent irrigation system will not be provided, the Contractor is responsible for implementing the Watering Program identified in the Landscape Plans.
H. The Landscape Contractor is responsible for keeping all plant materials adequately fertilized throughout the Maintenance and Establishment Periods. Fertilizer shall be applied at a rate to keep plant materials healthy. All fertilizer shall be done under the direction of a licensed fertilizer operator.
I. The Landscape Contractor shall control disease and pest infestations in the planting area. Upon approval, the Contractor shall implement the control measures, exercising extreme caution in using hazardous materials and taking all necessary steps to protect others on and near the job site. All disease and pest control shall be done under the direction of a licensed disease and pest control operator.
J. Herbicide Weed Control: All landscape areas shall be free of nut grass, torpedo grass, and other noxious weeds until final acceptance of work.

1. "Round-up" shall be applied to all planting areas as needed and determined on-site by the Owner for weed control. Apply per manufacturers specifications.
2. "Ronstar" pre-emergent or OWNER - approved equal, shall be applied 2 weeks before planting. Apply per manufacturers specifications.
3. Apply "Fusilade" in all areas where torpedo grass has emerged. Apply per manufacturers specifications.
4. Apply "Basagram" or "Marage" in all areas where nutgrass has emerged. Apply per manufacturers specifications.

K. Mowing of turf will commence ten (10) days after installation. The height of cut will be 3". After the first cut, the Contractor shall adjust the frequency of mowing so that at each operation no more than 1/3 of the grass blade is removed per cutting.
L. Between the 15th and 20th day of the Establishment Period, the Contractor shall re-sod all spots or areas within the lawn where normal turf growth is not evident. Turf must be well established and free of bare spots and weeds to the satisfaction of the OWNER or Landscape Architect prior to final acceptance. All planted areas other than lawn shall be weeded at intervals of not more than ten (10) days.
M. Application of fertilizer to be done between the fortieth (40) and fiftieth (50) day of the establishment period. Landscape Architect or Owner are to be notified a minimum of forty eight (48) hours in advance.
N. Improper maintenance or poor condition of any planting at the time of the termination of the scheduled Establishment Period may cause postponement of the final acceptance of the contract. Any material found to be dead, missing, or in poor condition during the establishment period shall be replaced immediately. Maintenance shall be continued by the Contractor until the work is acceptable.
O. Inspection and Final Acceptance:

1. In all cases the Landscape Architect will perform an initial and final inspection at the beginning and end of the Establishment Period, respectively. It is the responsibility of the Contractor to notify the Owner or Landscape Architect of the beginning and end of this period and to submit a written request for an inspection ten (10) days in advance.
2. Following inspection(s), Landscape Architect will prepare a listing of outstanding items to be addressed prior to final acceptance. Final acceptance will be given once the outstanding items are completed, and the work performed to the satisfaction of the Landscape Architect and OWNER.
3. Any material that is 25% or more dying shall be considered dead and must be replaced at no charge. A tree shall be considered dead when the main leader has died or when 25% of the crown is dead. A tree that has suffered significant leaf drop but shows signs of life may be left for later re-inspection. Such trees shall be subject to removal and replacement at any time up to and including the first re-inspection, as requested by the Owner or Landscape Architect. The Warranty Period for such trees shall not begin until after the second re-inspection.

4.02 WARRANTY PERIOD

A. Unless a different agreement is reached in writing between the Owner and the Contractor, all trees and other plant material, including ground covers, installed under this agreement shall be guaranteed to live and grow, and shall be warranted against defects, death and unsatisfactory growth for a period of one (1) year from the day of final acceptance of contract work.
B. Non-living landscape elements shall also carry a one (1) year guarantee on materials, labor, and workmanship.
C. Material found to be dead or in poor condition within the Warranty Period shall be replaced by the Contractor within fifteen (15) days of written notification by the Owner's representative. The Owner or Landscape Architect shall be the sole judges as to the condition of the material.
D. Materials and labor involved in the replacing of materials shall be supplied by the Contractor at no additional cost to the Owner.
E. Soil Testing: Should plant materials show yellowing or other signs of soil and/or nutritional problems, the Owner or Landscape Architect may request soil testing and analysis. Such testing will be at the expense of the Contractor.
1. Soil problems (as revealed by testing) shall be corrected by application of corrective chemicals and nutrients, removal and replacement of soil, or other measures as agreed upon by all parties. All such measures shall be at the Contractor's expense unless clear evidence establishes that the soil problem is not pre-existing and is caused by factors beyond the Contractor's control.
F. Replacement and Conditions:
1. Materials will be replaced as many times as necessary to satisfy the OWNER'S representative and the specifications. All replacement costs will be the responsibility of the Contractor.
2. Replacements will be of the same size, species, and specifications as the original. No additional soil additives will be required unless significant amounts of soil mix are lost before or during replacement.
3. Plant losses due to abnormal weather conditions such as floods, excessive wind damage (on properly staked or guyed trees), severe freezing, or hail will not be the responsibility of the Contractor.
4. Deciduous materials will be guaranteed to break dormancy at the proper season. Materials planted during their normal dormant period will be guaranteed to resume normal growth at the proper time for that species.

PART V ADDITIONAL LANDSCAPE NOTES

5.01 GENERAL

A. All proposed material shall be Florida No. 1 or better as set forth in "Grades & Standards for Nursery Plants," Part 1&2, Florida Dept. of Agriculture and Consumer Services, latest edition. No deviations will be permitted.
B. By submitting a bid, the landscape contractor is responsible for providing the material specified on the plans. No substitutions will be accepted without prior written approval and acceptance by the Owner or his representative, or Landscape Architect.
C. Materials to be hand-selected at the discretion of the Owner or his representative, or Landscape Architect.
D. All work shall proceed in a professional manner in accordance with standard nursery and installation practice.
E. Quantities on plant list are for convenience only. Landscape Contractor is responsible for all plants shown on planting plans. When discrepancies occur between plant list and planting plans, the plans are to override the plant list in all cases. Contractor is responsible for confirming sod quantities and certifying such to the Owner or his representative.
F. Contractor is responsible for locating all underground utilities prior to digging. Notify the Owner or his representative, or the Landscape Architect immediately regarding discrepancies or conflicts.
G. Landscape Contractor to notify the Owner or his representative, or Landscape Architect at least three (3) working days prior to beginning any stage of work.
H. Owner or Landscape Architect to be immediately notified of any discrepancies found in field.
I. Owner or his representative, or Landscape Architect reserve the right to field adjust plant material on-site to avoid conflicts or discrepancies not anticipated in the planning process.
J. Existing plant material to be removed, except as noted.
K. Landscape placement, with consideration to mature growth of all plant species, shall be field adjusted so as not to obstruct lighting fixtures, the view through windows, or residence addresses.

5.02 TREES AND PALMS

A. All trees, new and relocated, to be staked and guyed as detailed.
B. No double or multi-trunk trees unless otherwise specified.
C. Face of trees and palms to be located a minimum of 2'-0" off all sidewalks/bike paths or other paved surface, unless otherwise notated on plans.
D. Root suckers on Live Oaks are not acceptable.
E. All trees falling within grassed areas to have a mulch ring 5' in diameter, mulched 3" deep with no more than 1" deep directly adjacent to the trunk of the tree.
F. East Palatka Holly Trees shall be pruned and maintained in a natural shape and form.
G. The lower canopy of trees in all common areas shall be trimmed and maintained to a minimum height of 6' from finish grade through maturation of the tree to increase natural surveillance.

5.03 PLANTING BEDS

A. Groundcover and shrubs to be laid out in a uniform and consistent pattern.
B. All planting beds to receive mulch per plans.
C. Landscape Contractor is responsible for verifying that clean top soil, meeting the attached specifications, exists in each planting bed prior to planting. Contractor shall add or amend top soil if necessary. Tree pits shall be backfilled as noted in attached specifications. Excavate all shrub and groundcover beds as specified and backfill with planting soil per specifications.
D. All existing paving base material to be removed from planting areas and replaced with clean top soil prior to planting. Final grade within planting areas to be 2" below adjacent paved areas or top of curb.
E. Shrubs and hedges in all common areas shall be trimmed and maintained to a maximum height of 36" from finish grade through maturation of the plant to increase natural surveillance.

5.04 SOD

A. Landscape Contractor is responsible for replacing any damaged sod.

5.05 IRRIGATION

A. All landscape areas (including sod) shall be irrigated with an underground automatic sprinkler system providing 120% coverage with 50% overlap or utilizing a drip irrigation/low volume watering system. No landscape installation shall occur until the irrigation system is operational, unless approval is granted by Owner or his representative, or Landscape Architect.

5.06 LITTORAL PLANTINGS

A. Contractor to verify location and size of littoral shelf area and immediately coordinate with the Landscape Architect if discrepancies are found.
B. Littoral zone to be provided with a minimum of 6" of a sand topsoil mix prior to installation of material for those areas that do not have adequate soil conditions to ensure plant survivorship.
C. All littoral plantings to match approved planting plan. Contractor to verify dimensions and required offsets of planting areas prior to installation of material.
D. All bank slopes are to be treated with "Round-Up" or equal prior to installation or relocation of material.
E. All plants dug and removed from natural habitats must be free of exotics prior to installation in order to prevent seeding.
F. All marsh plants must be free of exotic plants (Hydrilla, Torpedo Grass, Etc.) prior to delivery to jobsite.
G. Contractor to remove all dead and browning leaves prior to installation.
H. Field collected littoral plants to be installed within 36 hours after being dug to insure vigorous root growth after installation.
I. All bare root material shall be kept sufficiently moist and thoroughly wrapped in cloth, burlap, or equal material.
J. All upland bank slopes and relocation areas to be mulched with pine straw immediately after planting.
K. Landscape contractor to coordinate temporary irrigation water source for upland planting areas prior to installation of material.

811 KNOW WHAT'S BELOW ALWAYS CALL 811 BEFORE YOU DIG
It's fast. It's free. It's the law.
www.callsunshine.com

urban design studio
Urban Design
Land Planning
Landscape Architecure
610 Clematis Street, Suite CU02
West Palm Beach, FL 33401
561.366.1100 FAX 561.366.1111
www.udsflorida.com
#LA0001739

Copyright:
All ideas, designs, arrangements, and plans represented by this drawing are owned by and the property of the designer, and were created for the exclusive use of the specified project. These ideas, designs, arrangements or plans shall not be used by, or disclosed to any person, firm, or corporation without the written permission of the designer.

Oxygen Development
Palm Springs, Florida
Landscape Specifications

Drawing name: H:\JOBS\Oxygen Development_07-066\Oxygen_SPR_003\Drawings\Landscape Plan\2022-10-27_LP_Resubmittal.dwg

DESIGN DEVELOPMENT

Date:	05.16.2022
Project No.:	07-066.002
Designed By:	JEB
Drawn By:	JEB
Checked By:	WT

Revision Dates:
05.16.2022 SUBMITTAL
07.29.2022 RESUBMITTAL
09-09-2022 RESUBMITTAL
09-20-2022 RESUBMITTAL
10-27-2022 RESUBMITTAL

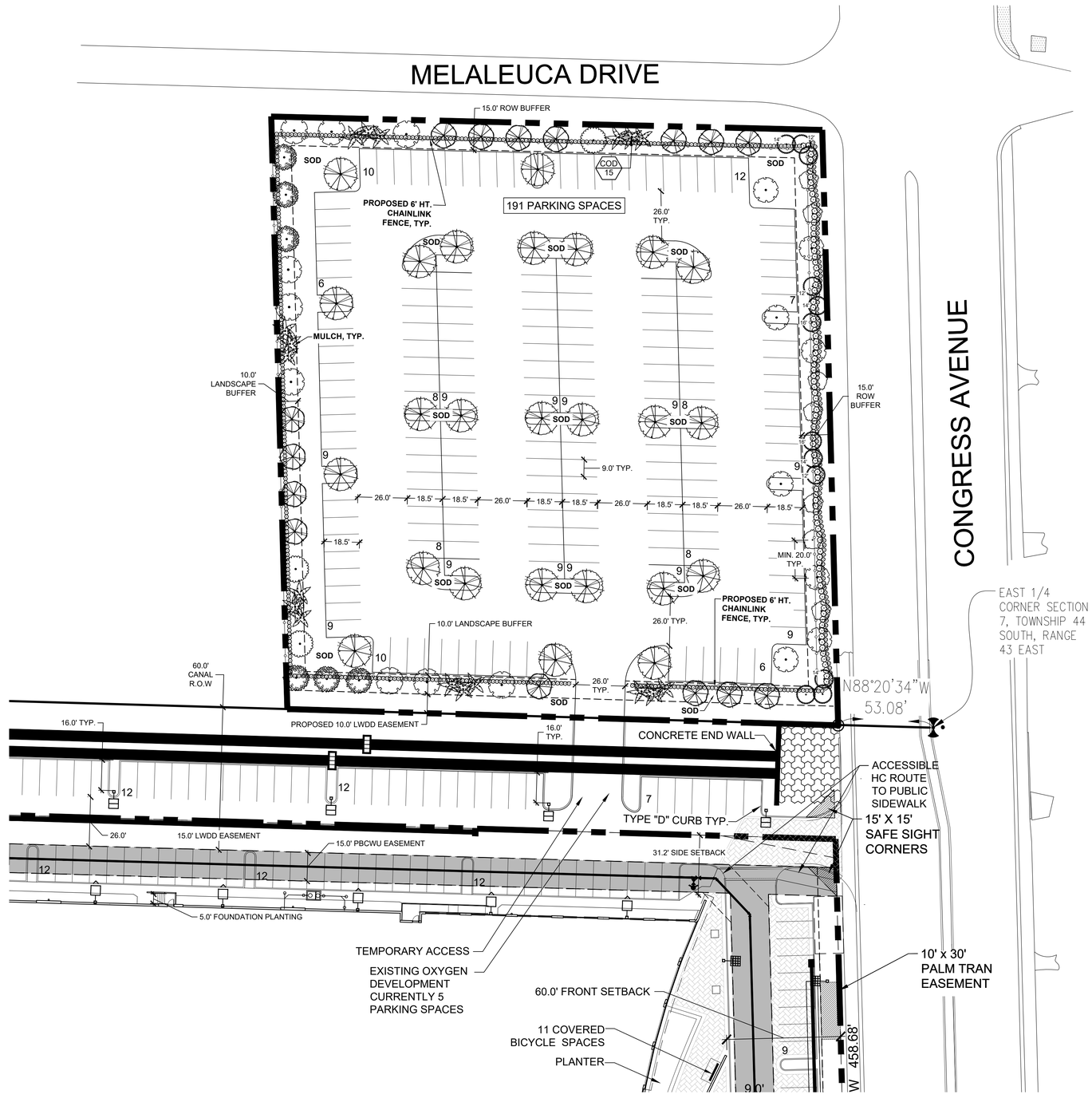

PLANT LEGEND

- SHADE TREE (LARGE)
- SHADE TREE (MEDIUM)
- SHADE TREE (SMALL)
- PALM TREE
- LARGE SHRUB
- MEDIUM SHRUB
- SMALL SHRUB / GROUNDCOVER

urban design kilday STUDIOS
Urban Planning & Design
Landscape Architecture
Communication Graphics

610 Clematis Street, Suite CU02
West Palm Beach, FL 33401
561.366.1100 FAX 561.366.1111
www.udkstudios.com
#LCC000035

Copyright:
All ideas, designs, arrangements, and plans represented by this drawing are owned by and the property of the designer, and were created for the exclusive use of the specified project. These ideas, designs, arrangements or plans shall not be used by, or disclosed to any person, firm, or corporation without the written permission of the designer.

Oxygen Development Future Parking Area

Palm Springs, Florida

Conceptual Site Plan with Landscape

Drawing name: H:\JOB\Oxygen Development_07-066\Oxygen_DPL_2022\Drawings\Landscape Plan\Future Parking Area Exhibit\2022-10-27_LP_Base.dwg

NORTH

0 15' 30' 60'

Scale: 1" = 30'-0"

Date:	10-27-2022
Project No.:	07-066.001
Designed By:	JEB
Drawn By:	JEB
Checked By:	WJT

Revision Dates:

EXHIBIT

ENGINEERING PLANS

PAVING, GRADING, DRAINAGE, WATER & SEWER IMPROVEMENTS

FOR

OXYGEN DEVELOPMENT

1525 S. CONGRESS AVE.

PALM SPRINGS, FL 33406

DEVELOPER: OXYGEN DEVELOPMENT, LLC.

1525 S. CONGRESS AVE.
PALM SPRINGS, FL 33406

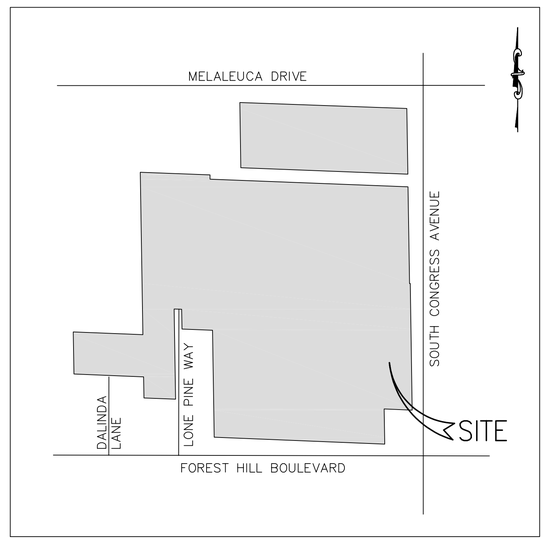

LOCATION MAP

N.T.S.

SEC. 24 TWP. 44S RGE. 42E

INDEX OF SHEETS

SHEET No.	DESCRIPTION
1	COVER SHEET
2	OVERALL SITE PLAN
3-4	DEMOLITION PLAN
5-6	PAVING, GRADING, & DRAINAGE PLAN
7	PAVEMENT MARKING & SIGNAGE PLAN
8-9	STORMWATER POLLUTION PREVENTION PLAN
10	GENERAL NOTES
11-12	PAVING, GRADING & DRAINAGE DETAILS
13	WATER & SEWER PLAN
14-18	POTABLE WATER STANDARD DETAILS
19-23	SANITARY SEWER STANDARD DETAILS

PREPARED BY:

Last Devenport, Inc.

1860 Old Okeechobee Road, Suite 504
West Palm Beach, FL 33409
phone (561)615-6567 fax (561)683-0872
EB 9889

THIS ITEM HAS BEEN DIGITALLY SIGNED AND SEALED BY SCOTT M. GINTERT, P.E. ON 10/26/2022.

PRINTED COPIES OF THIS DOCUMENT ARE NOT CONSIDERED SIGNED AND SEALED AND THE SIGNATURE MUST BE VERIFIED ON ANY ELECTRONIC COPIES.

ALL ELEVATIONS INDICATED HEREON ARE NGVD 29
VERTICAL DATUM BASED ON SURVEY PROVIDED BY:
JENNIFER MALIN, PSM #6667
ENGENUITY GROUP, INC. LB #6603
1280 N. CONGRESS AVE., STE. 101
WEST PALM BEACH, FL 33409 TEL:(561) 655-1151

NGVD TO NAVD CONVERSION = NGVD - 1.520 FT

CALL BEFORE YOU DIG
Sunshine State One Call 811
OF FLORIDA, INC.
811 or (800) 432-4770

PRELIMINARY ☐
PROGRESS SET ☐
BID SET ☐
PERMIT SET ☐
CONSTRUCTION SET ☐

10/26/2022
SCOTT M. GINTERT, P.E.
FLORIDA P.E. #84228

22-006 | COV

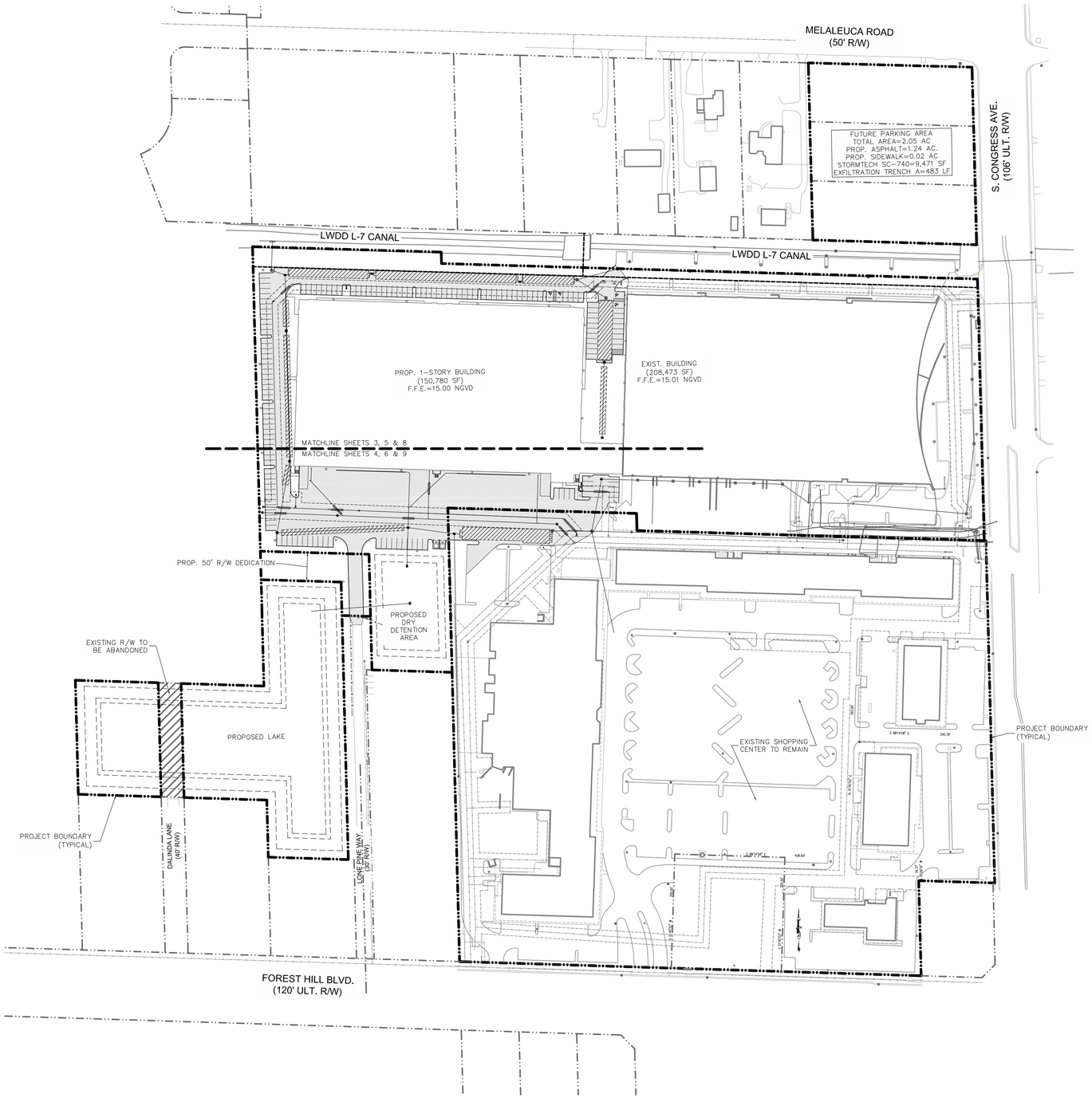

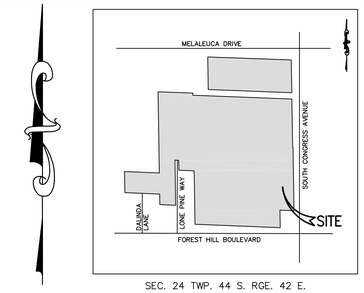

SEC. 24 TWP. 44 S. RGE. 42 E.

GRAPHIC SCALE

100 0 50 100 200 400

(IN FEET)
1 inch = 100 ft.

LEGEND

- PROPOSED STORM DRAINAGE STRUCTURE
- EXIST. STORM DRAINAGE STRUCTURE
- EXIST. WATER MAIN
- PROP. WATER MAIN W/ GATE VALVE
- PROP. SAN. SEWER MAIN WITH SANITARY MANHOLE
- EXIST. SAN. SEWER MAIN WITH SANITARY MANHOLE
- PROP. EXFILTRATION TRENCH

ALL ELEVATIONS INDICATED HEREON ARE NGVD 29
VERTICAL DATUM BASED ON SURVEY PROVIDED BY:
JENNIFER MALIN, PSM #6667
ENGENUITY GROUP, INC. LB #6603
1280 N. CONGRESS AVE., STE. 101
WEST PALM BEACH, FL 33409 TEL:(561) 655-1151

NGVD TO NAVD CONVERSION = NGVD - 1.520 FT

CALL BEFORE YOU DIG
Sunshine State One Call 811
OF FLORIDA, INC.
811 or (800) 432-4770

OVERALL SITE PLAN FOR OXYGEN DEVELOPMENT PALM SPRINGS, FLORIDA

REVISIONS	DATE	BY	CK
1. REVISED PER UPDATED SITE PLAN	07/15/22	SMG	SMG
2. REVISED PER UPDATED SITE PLAN	09/09/22	SMG	SMG
3. REVISED PER UPDATED SITE PLAN	10/26/22	SMG	SMG

EB 9889
LDi
Last Devenport, Inc.
1860 Old Okeechobee Road, Suite 504
West Palm Beach, FL 33409
phone (561)615-6567 fax (561)683-0872

SCALE: 1"=100'
DATE: 10/26/22
DESIGNED BY:SG
CHECKED BY:SG
DRAWING FILE:
22-006-C.1

10/26/2022
SCOTT M. GINTERT, P.E.
FLORIDA P.E. #84228

22-006 | C.1

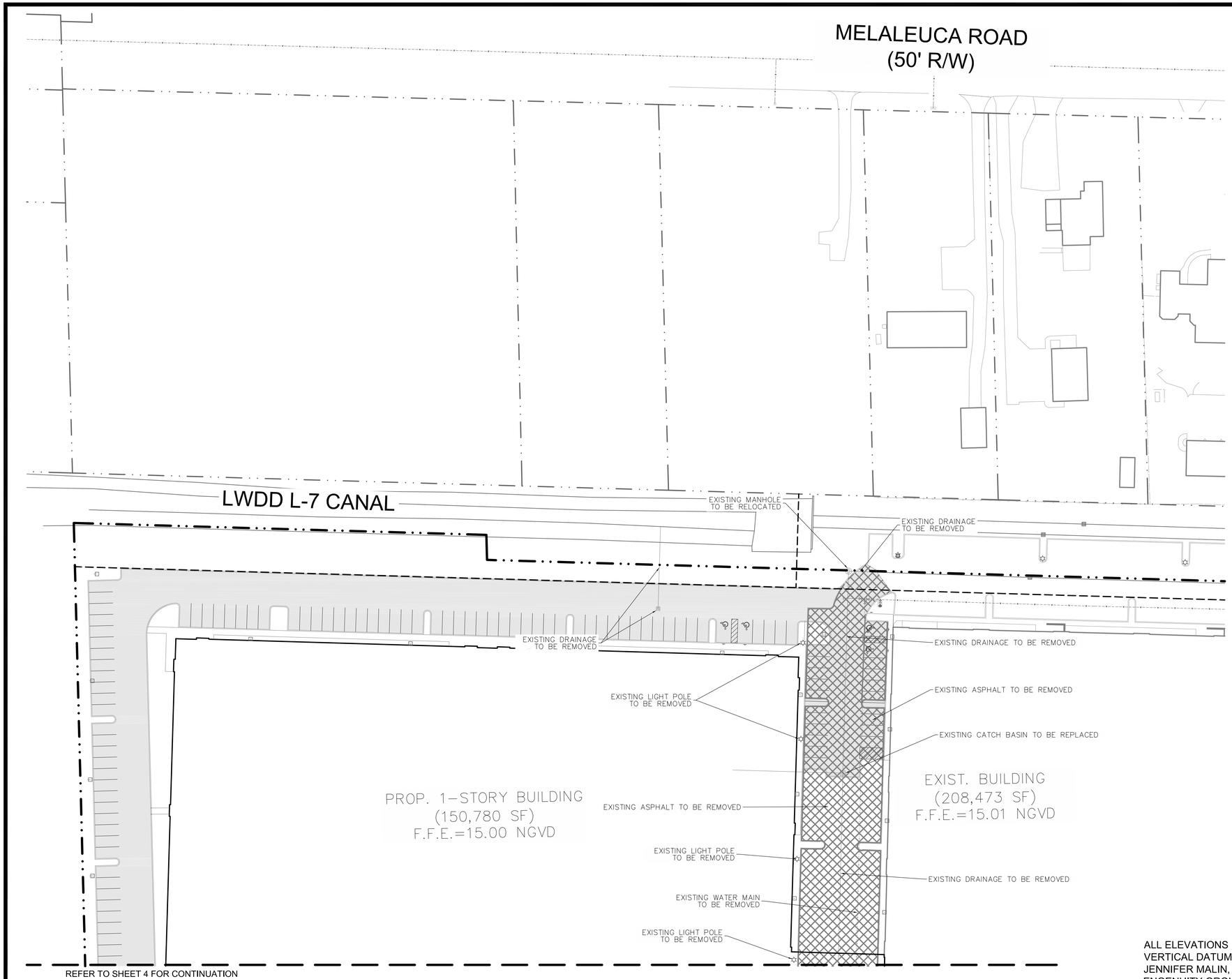

REFER TO SHEET 4 FOR CONTINUATION

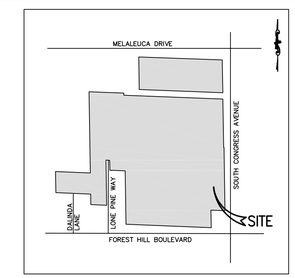

SEC. 24 TWP. 44 S. RGE. 42 E.

GRAPHIC SCALE

60 0 30 60 120 240

(IN FEET)
1 inch = 60 ft.

LEGEND

- EXIST. STORM DRAINAGE STRUCTURE
- EXIST. WATER MAIN
- EXIST. SAN. SEWER MAIN WITH SANITARY MANHOLE
- PROP. PAVEMENT
- EXIST. PAVEMENT TO BE MILLED & OVERLAID
- EXIST. PAVEMENT / BUILDING TO BE REMOVED

ALL ELEVATIONS INDICATED HEREON ARE NGVD 29
VERTICAL DATUM BASED ON SURVEY PROVIDED BY:
JENNIFER MALIN, PSM #6667
ENGENUITY GROUP, INC. LB #6603
1280 N. CONGRESS AVE., STE. 101
WEST PALM BEACH, FL 33409 TEL:(561) 655-1151

NGVD TO NAVD CONVERSION = NGVD - 1.520 FT

CALL BEFORE YOU DIG
Sunshine State One Call 811
OF FLORIDA, INC.
811 or (800) 432-4770

DEMOLITION PLAN
FOR
OXYGEN DEVELOPMENT
PALM SPRINGS, FLORIDA

REVISIONS

		DATE	BY	CK
1.	REVISED PER UPDATED SITE PLAN	07/15/22	SMG	SMG
2.	REVISED PER UPDATED SITE PLAN	09/09/22	SMG	SMG
3.	REVISED PER PBCWUD COMMENTS	09/21/22	SMG	SMG
4.	REVISED PER UPDATED SITE PLAN	10/26/22	SMG	SMG

EB 9889
LDi
Last Devenport, Inc.
1860 Old Okeechobee Road, Suite 504
West Palm Beach, FL 33409
phone (561)615-6567 fax (561)683-0872

SCALE: 1"=40'
DATE: 10/26/22
DESIGNED BY:SG
CHECKED BY:SG
DRAWING FILE: 22-006-C.2

10/26/2022
SCOTT M. GINTERT, P.E.
FLORIDA P.E. #84228

22-006 | C.2

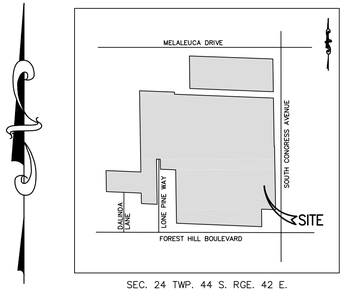

SEC. 24 TWP. 44 S. RGE. 42 E.

GRAPHIC SCALE

40 0 20 40 80 160

(IN FEET)
1 inch = 40 ft.

REFER TO SHEET 3 FOR CONTINUATION

EXISTING DRAINAGE TO BE REMOVED

EXISTING DRAINAGE TO BE REMOVED

EXISTING WATER MAIN TO BE REMOVED

EXISTING CATCH BASIN TO BE REPLACED

EXISTING LIGHT POLE TO BE REMOVED

EXISTING ASPHALT TO BE MILLED AND OVERLAID

EXISTING DRAINAGE TO BE REPLACED

EXISTING CATCH BASIN TO BE RELOCATED AND REPLACED.

EXISTING MANHOLE TO BE REPLACED

EXISTING DRAINAGE TO BE REMOVED

EXISTING FENCE TO BE REMOVED

EXISTING POWER POLE TO BE RELOCATED

EXISTING BUILDING TO BE REMOVED

EXISTING ASPHALT TO BE REMOVED

EXISTING WATER METER TO BE REMOVED BY PBCWUD

EXISTING BUILDINGS TO BE REMOVED

EXISTING FENCE TO BE REMOVED

EXISTING ASPHALT TO BE REMOVED

EXISTING BUILDINGS TO BE REMOVED

EXISTING FENCE TO BE REMOVED

EXISTING BUILDING TO BE REMOVED

DALINDA LANE (40' R/W)

LONE PINE WAY (30' R/W)

LEGEND

- EXIST. STORM DRAINAGE STRUCTURE
- EXIST. WATER MAIN
- EXIST. SAN. SEWER MAIN WITH SANITARY MANHOLE
- PROP. PAVEMENT
- EXIST. PAVEMENT TO BE MILLED & OVERLAID
- EXIST. PAVEMENT / BUILDING TO BE REMOVED

ALL ELEVATIONS INDICATED HEREON ARE NGVD 29
VERTICAL DATUM BASED ON SURVEY PROVIDED BY:
JENNIFER MALIN, PSM #6667
ENGENUITY GROUP, INC. LB #6603
1280 N. CONGRESS AVE., STE. 101
WEST PALM BEACH, FL 33409 TEL:(561) 655-1151

NGVD TO NAVD CONVERSION = NGVD - 1.520 FT

CALL BEFORE YOU DIG
Sunshine State One Call 811
OF FLORIDA, INC.
811 or (800) 432-4770

DEMOLITION PLAN FOR OXYGEN DEVELOPMENT

PALM SPRINGS, FLORIDA

REVISIONS	DATE	BY	CK
1. REVISED PER UPDATED SITE PLAN	07/15/22	SMG	SMG
2. REVISED PER UPDATED SITE PLAN	09/09/22	SMG	SMG
3. REVISED PER PBCWUD COMMENTS	09/21/22	SMG	SMG
4. REVISED PER UPDATED SITE PLAN	10/26/22	SMG	SMG

EB 9889
LDi Last Devenport, Inc.
1860 Old Okeechobee Road, Suite 504
West Palm Beach, FL 33409
phone (561)615-6567 fax (561)683-0872

SCALE: 1"=40'
DATE: 10/26/22
DESIGNED BY:SG
CHECKED BY:SG
DRAWING FILE: 22-006-C.3

10/26/2022
SCOTT M. GINTERT, P.E.
FLORIDA P.E. #84228

22-006 | C.3

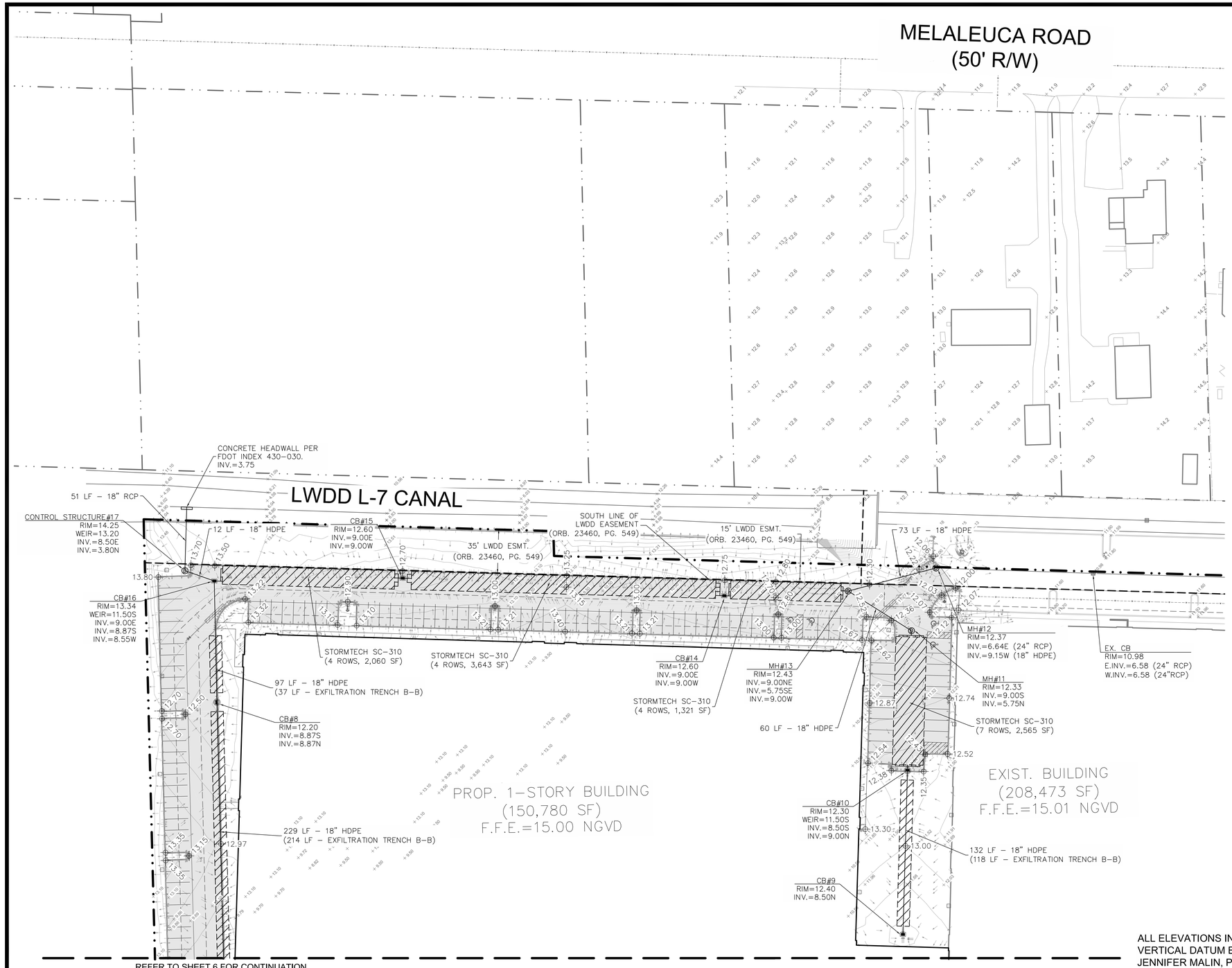

REFER TO SHEET 6 FOR CONTINUATION

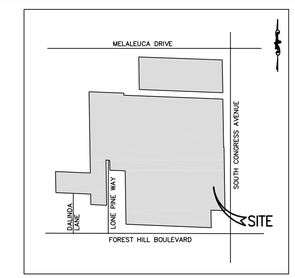

SEC. 24 TWP. 44 S. RGE. 42 E.

GRAPHIC SCALE

40 0 20 40 80 160

(IN FEET)
1 inch = 40 ft.

LEGEND

17.01	PROPOSED GRADE
18.75	EXISTING GRADE
	PROPOSED STORM DRAINAGE STRUCTURE
	EXIST. STORM DRAINAGE STRUCTURE
	EXIST. WATER MAIN
	PROP. WATER MAIN W/ GATE VALVE
	PROP. SAN. SEWER MAIN WITH SANITARY MANHOLE
	EXIST. SAN. SEWER MAIN WITH SANITARY MANHOLE
	PROP. EXFILTRATION TRENCH
	PROP. PAVEMENT

ALL ELEVATIONS INDICATED HEREON ARE NGVD 29
VERTICAL DATUM BASED ON SURVEY PROVIDED BY:
JENNIFER MALIN, PSM #6667
ENGENUITY GROUP, INC. LB #6603
1280 N. CONGRESS AVE., STE. 101
WEST PALM BEACH, FL 33409 TEL:(561) 655-1151

NGVD TO NAVD CONVERSION = NGVD - 1.520 FT

CALL BEFORE YOU DIG
Sunshine State One Call 811
OF FLORIDA, INC.
811 or (800) 432-4770

PAVING, GRADING, & DRAINAGE PLAN
FOR
OXYGEN DEVELOPMENT
PALM SPRINGS, FLORIDA

REVISIONS

		DATE	BY	CK
1.	REVISED PER UPDATED SITE PLAN	07/15/22	SMG	SMG
2.	REV. PER PALM SPRINGS COMMENTS	09/09/22	SMG	SMG
3.	REVISED PER PBCWUD COMMENTS	09/21/22	SMG	SMG
4.	REVISED PER UPDATED SITE PLAN	10/26/22	SMG	SMG

EB 9889
LDi
Last Devenport, Inc.
1860 Old Okeechobee Road, Suite 504
West Palm Beach, FL 33409
phone (561)615-6567 fax (561)683-0872

SCALE: 1"=40'
DATE: 10/26/22
DESIGNED BY:SG
CHECKED BY:SG
DRAWING FILE:
22-006-C.4

10/26/2022
SCOTT M. GINTERT, P.E.
FLORIDA P.E. #84228

22-006 | C.4

SEC. 24 TWP. 44 S. RGE. 42 E.

GRAPHIC SCALE

40 0 20 40 80 160

(IN FEET)
1 inch = 40 ft.

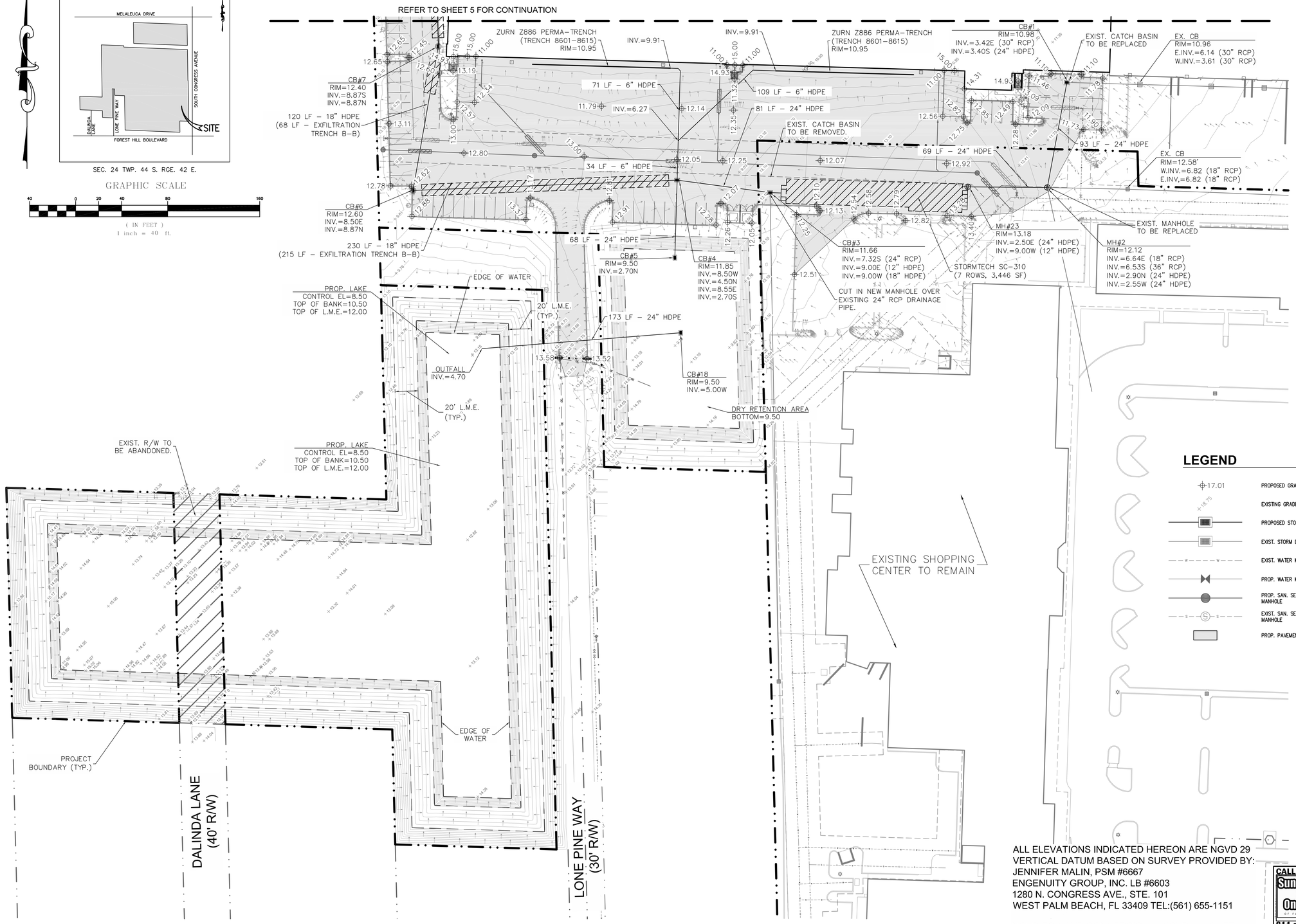

LEGEND

17.01	PROPOSED GRADE
18.75	EXISTING GRADE
	PROPOSED STORM DRAINAGE STRUCTURE
	EXIST. STORM DRAINAGE STRUCTURE
W W	EXIST. WATER MAIN
	PROP. WATER MAIN W/ GATE VALVE
	PROP. SAN. SEWER MAIN WITH SANITARY MANHOLE
S S	EXIST. SAN. SEWER MAIN WITH SANITARY MANHOLE
	PROP. PAVEMENT

ALL ELEVATIONS INDICATED HEREON ARE NGVD 29
VERTICAL DATUM BASED ON SURVEY PROVIDED BY:
JENNIFER MALIN, PSM #6667
ENGENUITY GROUP, INC. LB #6603
1280 N. CONGRESS AVE., STE. 101
WEST PALM BEACH, FL 33409 TEL:(561) 655-1151

NGVD TO NAVD CONVERSION = NGVD - 1.520 FT

CALL BEFORE YOU DIG
Sunshine State One Call 811
811 or (800) 432-4770

PAVING, GRADING, & DRAINAGE PLAN FOR OXYGEN DEVELOPMENT PALM SPRINGS, FLORIDA

REVISIONS

	DATE	BY	CK
1. REVISED PER UPDATED SITE PLAN	07/15/22	SMG	SMG
2. REV. PER PALM SPRINGS COMMENTS	09/09/22	SMG	SMG
3. REV. PER PBCWUD COMMENTS	09/21/22	SMG	SMG

EB 9889
Last Devenport, Inc.
1860 Old Okeechobee Road, Suite 504
West Palm Beach, FL 33409
phone (561)615-6567 fax (561)683-0872

SCALE: 1"=40'
DATE: 10/26/22
DESIGNED BY:SG
CHECKED BY:SG
DRAWING FILE: 22-006-C.5

10/26/2022
SCOTT M. GINTERT, P.E.
FLORIDA P.E. #84228

22-006 | C.5

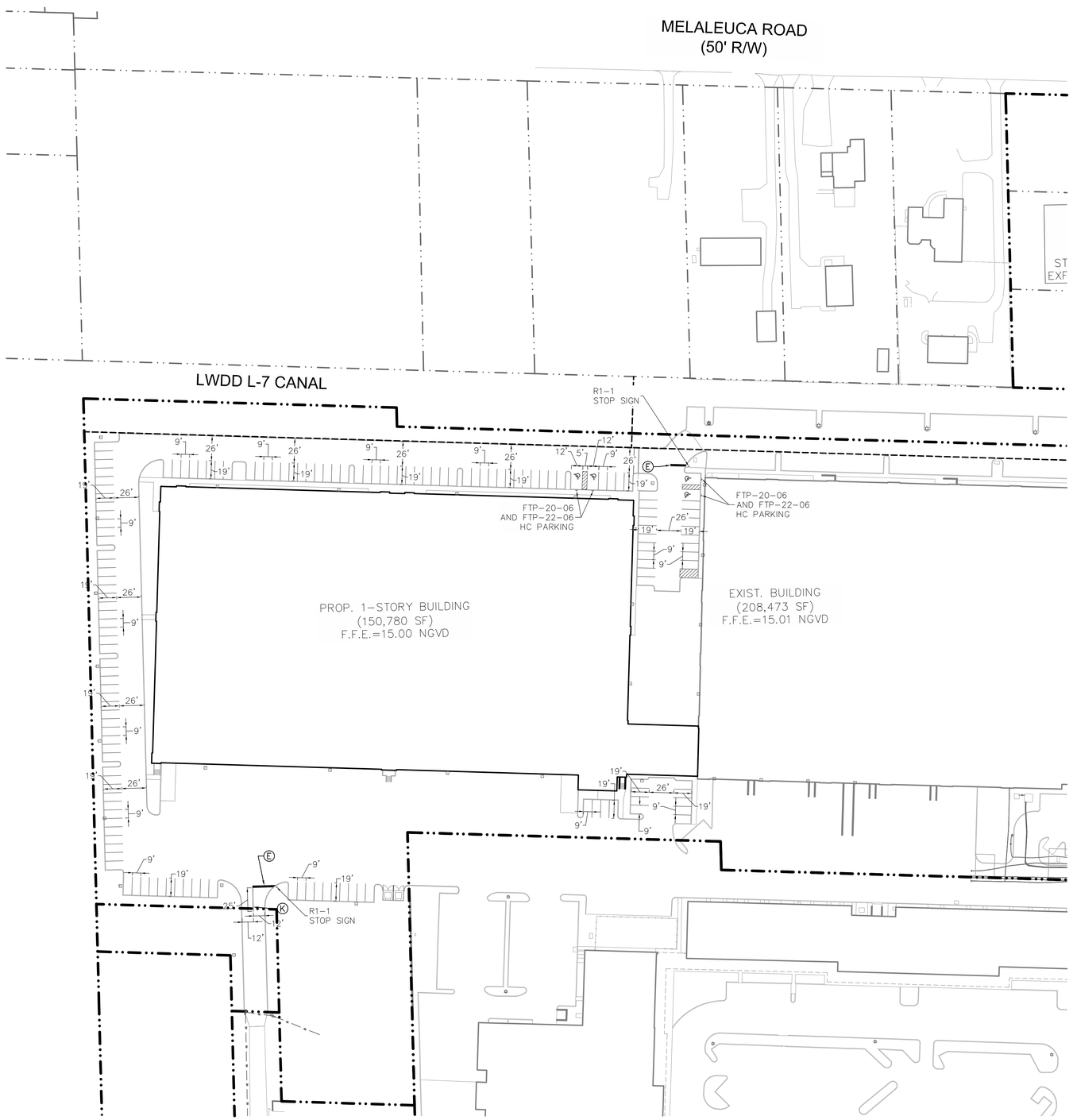

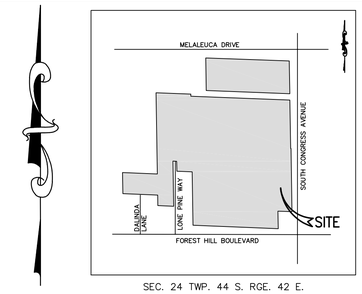

SEC. 24 TWP. 44 S. RGE. 42 E.

GRAPHIC SCALE

60 0 30 60 120 240

(IN FEET)
1 inch = 60 ft.

STRIPING KEY

- Ⓐ— 6" SOLID WHITE
- Ⓑ— 8" SOLID WHITE
- Ⓒ— 12" SOLID WHITE
- Ⓓ 18" SOLID WHITE
- Ⓔ— 24" SOLID WHITE
- Ⓕ— 6" SKIP WHITE TYP. (10'–30')
- Ⓖ— 6" SKIP WHITE TYP. (6'–10')
- Ⓗ— 6" SKIP WHITE TYP. (2'–4')
- Ⓘ— 6" SOLID YELLOW
- Ⓙ— 18" SOLID YELLOW
- Ⓚ— 6" DOUBLE YELLOW
- Ⓛ— 6" SKIP YELLOW TYP. (10'–30')
- Ⓜ— 6" SKIP YELLOW TYP. (6'–10')
- Ⓝ— 6" SKIP YELLOW TYP. (2'–4')
- Ⓟ— RPM BI–DIRECTIONAL AMBER/AMBER
- Ⓡ— FDP WHITE
- Ⓢ— FDP YELLOW
- Ⓣ— RPM BI–DIRECTIONAL WHITE/RED
- Ⓤ— RPM BI–DIRECTIONAL RED/YELLOW

PAVEMENT MARKING AND SIGNAGE NOTES

1. OBTAIN ALL REQUIRED PERMITS AND APPROVALS.
2. NOTIFY ALL REGULATORY AGENCIES AT LEAST 48 HOURS PRIOR TO COMMENCEMENT.
3. ALL PAVEMENT MARKING AND SIGNAGE SHALL BE INSTALLED IN ACCORDANCE WITH PALM BEACH COUNTY, AASHTO, MUTCD AND FDOT WHEREVER APPLICABLE. INSTALLATION SHALL INCLUDE PLACEMENT OF ALL REQUIRED REFLECTIVE PAVEMENT MARKERS (RPM'S).
4. CONTRACTOR SHALL VERIFY ALL EXISTING UNDERGROUND UTILITIES WITHIN PROJECT LIMITS AND SHALL NOTIFY ENGINEER IN WRITING OF ANY DISCREPANCIES ON THE PLANS.
5. CONTRACTOR SHALL MAINTAIN A CLEAN WORK ENVIRONMENT AND SHALL PROPERLY DISPOSE OF ANY DEBRIS AT THE END OF EACH DAY UNLESS OTHERWISE APPROVED BY OWNER.
6. CONTRACTOR SHALL BE RESPONSIBLE FOR ALL MAINTENANCE OF TRAFFIC THROUGHOUT THE DURATION OF CONSTRUCTION.
7. CONTRACTOR SHALL TAKE REASONABLE CARE NOT TO DAMAGE ANY SURROUNDING EXISTING PROPERTIES OR IMPROVEMENTS. ANY DAMAGES SHALL BE PROMPTLY REPAIRED TO ORIGINAL OR BETTER CONDITION TO THE SATISFACTION OF THE OWNER AND/OR ENGINEER.
8. ALL PERMANENT SIGNAGE SHALL REMAIN COVERED UNTIL SUCH TIME AS CONSTRUCTION IS COMPLETE AND CONSTRUCTION MAINTENANCE OF TRAFFIC SIGNAGE IS REMOVED.
9. PAVEMENT MARKINGS & SIGNINGS SHALL BE IN ACCORDANCE WITH THE MANUAL OF UNIFORM TRAFFIC CONTROL DEVICES FOR STREETS & HIGHWAYS AND PALM BEACH COUNTY TYPICALS FOR PAVEMENT MARKINGS, SIGNING & GEOMETRICS T-P-21.

ALL ELEVATIONS INDICATED HEREON ARE NGVD 29
VERTICAL DATUM BASED ON SURVEY PROVIDED BY:
JENNIFER MALIN, PSM #6667
ENGENUITY GROUP, INC. LB #6603
1280 N. CONGRESS AVE., STE. 101
WEST PALM BEACH, FL 33409 TEL:(561) 655-1151

NGVD TO NAVD CONVERSION = NGVD - 1.520 FT

CALL BEFORE YOU DIG
Sunshine State One Call 811
OF FLORIDA, INC.
811 or (800) 432-4770

PAVEMENT MARKING & SIGNAGE PLAN FOR OXYGEN DEVELOPMENT PALM SPRINGS, FLORIDA

REVISIONS	DATE	BY	CK
1. REVISED PER UPDATED SITE PLAN	07/15/22	SMG	SMG
2. REVISED PER UPDATED SITE PLAN	09/09/22	SMG	SMG
3. REVISED PER UPDATED SITE PLAN	10/26/22	SMG	SMG

EB 9889
LDi Last Devenport, Inc.
1860 Old Okeechobee Road, Suite 504
West Palm Beach, FL 33409
phone (561)615-6567 fax (561)683-0872

SCALE: 1"=60'
DATE: 10/26/22
DESIGNED BY:SG
CHECKED BY:SG
DRAWING FILE: 22-006-C.6

10/26/2022
SCOTT M. GINTERT, P.E.
FLORIDA P.E. #84228

22-006 | C.6

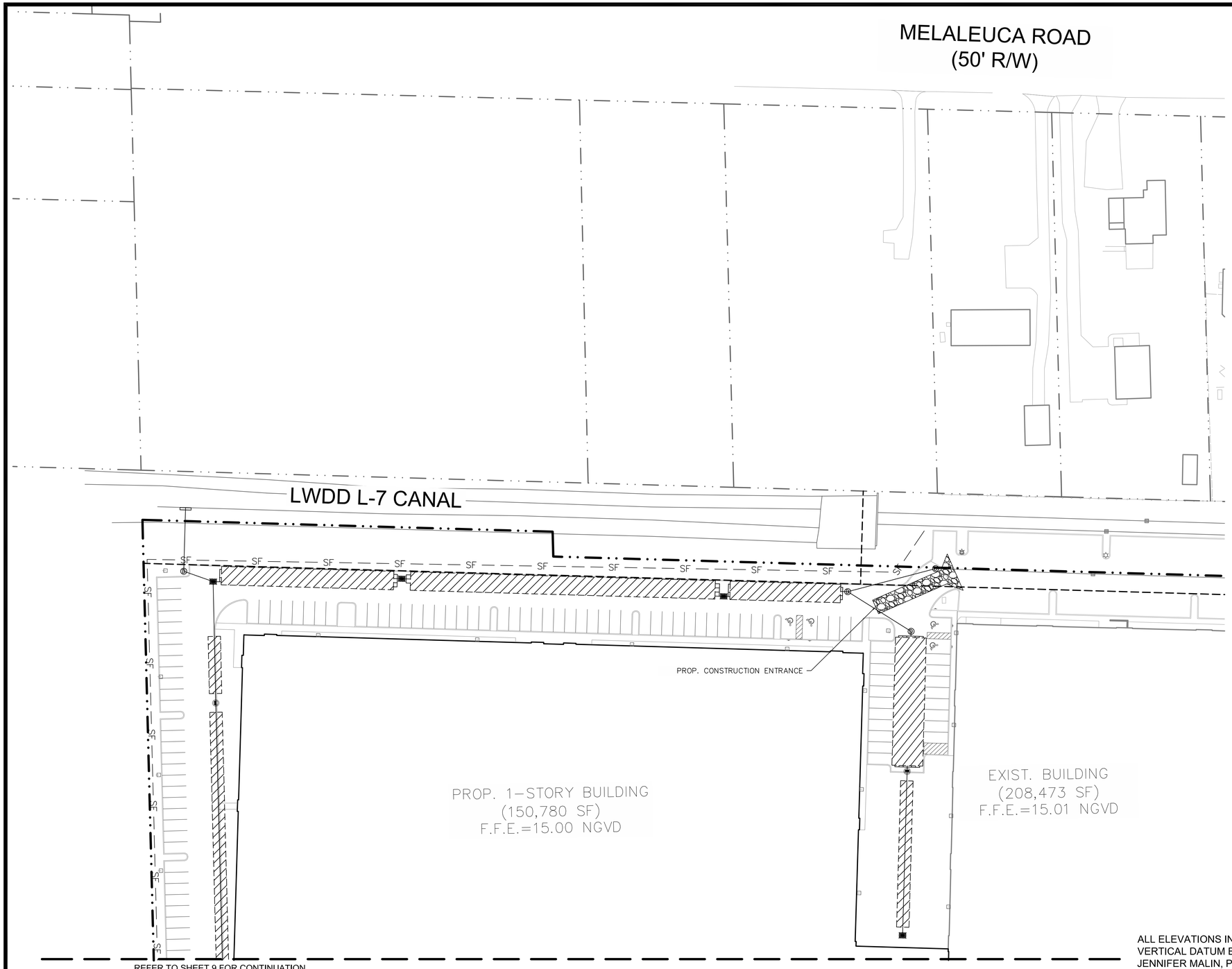

REFER TO SHEET 9 FOR CONTINUATION

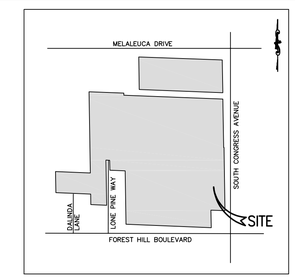

SEC. 24 TWP. 44 S. RGE. 42 E.

GRAPHIC SCALE

40 0 20 40 80 160

(IN FEET)
1 inch = 40 ft.

LEGEND

- PROPOSED STORM DRAINAGE STRUCTURE
- PROP. EXFILTRATION TRENCH
- SF — PROPOSED SILT FENCE
- PROPOSED CONSTRUCTION ENTRANCE

ALL ELEVATIONS INDICATED HEREON ARE NGVD 29
VERTICAL DATUM BASED ON SURVEY PROVIDED BY:
JENNIFER MALIN, PSM #6667
ENGENUITY GROUP, INC. LB #6603
1280 N. CONGRESS AVE., STE. 101
WEST PALM BEACH, FL 33409 TEL:(561) 655-1151

NGVD TO NAVD CONVERSION = NGVD - 1.520 FT

CALL BEFORE YOU DIG
Sunshine State One Call 811
OF FLORIDA, INC.
811 or (800) 432-4770

STORMWATER POLLUTION PREVENTION PLAN FOR OXYGEN DEVELOPMENT PALM SPRINGS, FLORIDA

REVISIONS	DATE	BY	CK
1. REVISED PER UPDATED SITE PLAN	07/15/22	SMG	SMG
2. REVISED PER UPDATED SITE PLAN	09/09/22	SMG	SMG
3. REVISED PER UPDATED SITE PLAN	10/26/22	SMG	SMG

EB 9889
LDi
Last Devenport, Inc.
1860 Old Okeechobee Road, Suite 504
West Palm Beach, FL 33409
phone (561)615-6567 fax (561)683-0872

SCALE: 1"=40'
DATE: 10/26/22
DESIGNED BY:SG
CHECKED BY:SG
DRAWING FILE: 22-006-C.7

10/26/2022
SCOTT M. GINTERT, P.E.
FLORIDA P.E. #84228

22-006 | C.7

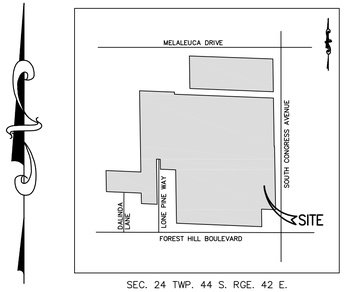

SEC. 24 TWP. 44 S. RGE. 42 E.

GRAPHIC SCALE

40 0 20 40 80 160

(IN FEET)
1 inch = 40 ft.

REFER TO SHEET 8 FOR CONTINUATION

PROP. CONSTRUCTION ENTRANCE

DALINDA LANE
(40' R/W)

LONE PINE WAY
(30' R/W)

LEGEND

- PROPOSED STORM DRAINAGE STRUCTURE
- PROP. EXFILTRATION TRENCH
- SF — PROPOSED SILT FENCE
- PROPOSED CONSTRUCTION ENTRANCE

ALL ELEVATIONS INDICATED HEREON ARE NGVD 29
VERTICAL DATUM BASED ON SURVEY PROVIDED BY:
JENNIFER MALIN, PSM #6667
ENGENUITY GROUP, INC. LB #6603
1280 N. CONGRESS AVE., STE. 101
WEST PALM BEACH, FL 33409 TEL:(561) 655-1151

NGVD TO NAVD CONVERSION = NGVD - 1.520 FT

CALL BEFORE YOU DIG
Sunshine State One Call 811
OF FLORIDA, INC.
811 or (800) 432-4770

STORMWATER POLLUTION PREVENTION PLAN
FOR
OXYGEN DEVELOPMENT
PALM SPRINGS, FLORIDA

REVISIONS	DATE	BY	CK
1. REVISED PER UPDATED SITE PLAN	07/15/22	SMG	SMG
2. REVISED PER UPDATED SITE PLAN	09/09/22	SMG	SMG

EB 9889
Last Devenport, Inc.
1860 Old Okeechobee Road, Suite 504
West Palm Beach, FL 33409
phone (561)615-6567 fax (561)683-0872

SCALE: 1"=40'
DATE: 10/26/22
DESIGNED BY:SG
CHECKED BY:SG
DRAWING FILE: 22-006-C.8

10/26/2022
SCOTT M. GINTERT, P.E.
FLORIDA P.E. #84228

22-006 | C.8

GENERAL CONSTRUCTION NOTES

1. ALL CHANGES SHALL BE APPROVED IN WRITING BY THE ENGINEER OF RECORD.
2. ALL WORK SHALL BE DONE IN A WELL EXECUTED MANNER AND SHALL CONFORM TO ALL APPLICABLE CITY, COUNTY, STATE OR FEDERAL REGULATIONS AND/OR CODES. THE CONTRACTOR SHALL BE RESPONSIBLE FOR OBTAINING ALL PERMITS AND LICENSES REQUIRED PRIOR TO INITIATING THE WORK.
3. SEQUENCE OF CONSTRUCTION – THE SEQUENCE OF CONSTRUCTION SHALL BE SUCH THAT ALL UNDERGROUND INSTALLATIONS OF EVERY KIND THAT ARE BENEATH THE PAVEMENT, SHALL BE IN PLACE AND HAVE PROPER DENSITY PRIOR TO THE CONSTRUCTION AND COMPACTION OF THE SUBGRADE.
4. THE CONTRACTOR SHALL CALL CALL THE SUNSHINE STATE ONE CALL AT 811 OR 1–888–432–4770 48 HOURS BEFORE DIGGING FOR FIELD LOCATIONS OF UNDERGROUND UTILITIES.
5. AS–BUILTS – CONTRACTOR SHALL MAINTAIN AN "AS–BUILT" SET OF DRAWINGS TO RECORD THE EXACT LOCATION OF ALL PIPING AND PIPE INVERT ELEVATIONS PRIOR TO CONCEALMENT. DRAWINGS SHALL BE GIVEN TO THE OWNER UPON COMPLETION OF THE PROJECT.
6. ELEVATIONS – ALL ELEVATIONS INDICATED HEREON ARE NGVD 29 VERTICAL DATUM BASED ON TOPOGRAPHIC SURVEY INFORMATION PROVIDED BY ENGENUITY GROUP, INC. CONTRACTOR SHALL FIELD VERIFY ALL ELEVATIONS PRIOR TO COMMENCEMENT AND SHALL NOTIFY ENGINEER IN WRITING OF ANY CONFLICTS. FAILURE TO DO SO SHALL SERVE AS CONTRACTOR'S ACCEPTANCE OF ALL EXISTING GRADES IN "AS–IS, WHERE–IS" CONDITION.
7. PROTECT ALL PROPERTY MONUMENTS AND PINS. MONUMENTS AND PINS THAT WILL BE DISTURBED DURING CONSTRUCTION SHALL BE REFERENCED AND REPLACED BY A LICENSED LAND SURVEYOR.
8. CONTRACTOR SHALL MAINTAIN THE SITE IN A MANNER SUCH THAT WORKMEN AND THE PUBLIC WILL BE PROTECTED FROM INJURY, AND ADJOINING PROPERTY PROTECTED FROM DAMAGE.
9. CONTRACTOR SHALL REMOVE ALL TRASH AND DEBRIS FROM THE SITE UPON COMPLETION OF THE PROJECT AND AT LEAST ONCE A DAY DURING CONSTRUCTION.
10. CONTRACTOR IS RESPONSIBLE FOR DAMAGE TO ANY EXISTING ITEM AND/OR MATERIAL DUE TO CONSTRUCTION OPERATIONS. ALL STREET SURFACES, UTILITY POLES, CULVERTS, DITCHES, CURB AND GUTTER OR OTHER STRUCTURES THAT ARE DISTURBED OR DAMAGED IN ANY MANNER AS A RESULT OF CONSTRUCTION SHALL BE REPLACED OR REPAIRED BY THE CONTRACTOR IN ACCORDANCE WITH THE APPROPRIATE SPECIFICATIONS.
11. IF DEPARTURES FROM THE DRAWINGS OR SPECIFICATIONS ARE DEEMED NECESSARY BY THE CONTRACTOR, DETAILS OF SUCH DEPARTURES AND REASONS THEREOF SHALL BE SUBMITTED IN WRITING TO THE OWNER FOR REVIEW. NO DEPARTURES FROM THE CONTRACT DOCUMENTS WILL BE ALLOWED WITHOUT APPROVAL BY THE ENGINEER OF RECORD.
12. ANY AND ALL QUANTITIES SHOWN OR IMPLIED ON THE PLANS ARE FOR ESTIMATION PURPOSES ONLY.
13. PRIOR TO ANY CONSTRUCTION ACTIVITIES, THE CONTRACTOR WILL NOTIFY THE ENGINEER OF RECORD, AT A MINIMUM, 48 HOURS PRIOR TO COMMENCING CONSTRUCTION. FURTHERMORE, PRECONSTRUCTION MEETINGS MAY BE REQUIRED WITH ALL AGENCIES HAVING JURISDICTION OVER THE PROJECT PRIOR TO COMMENCEMENT OF CONSTRUCTION. THESE MAY INCLUDE BUT NOT BE LIMITED TO PALM BEACH COUNTY ENGINEERING, SOUTH FLORIDA WATER MANAGEMENT DISTRICT AND PALM BEACH COUNTY ENVIRONMENTAL RESOURCES MANAGEMENT.
14. GRADES SHOWN ARE FINISHED GRADE SPOT ELEVATIONS. CONTRACTOR SHALL GRADE ROADWAY TO DRAIN TO PROPOSED CATCH BASINS AND DETENTION AREAS. ANY CONFLICTS SHALL BE PRESENTED TO ENGINEER IN WRITING FOR RESOLUTION PRIOR TO COMMENCEMENT OF CONSTRUCTION.
15. CLEARING AND GRUBBING – WITHIN THE LIMITS OF CONSTRUCTION, ALL VEGETATION AND ROOT MATERIAL SHALL BE REMOVED. CONTRACTOR SHALL TAKE DUE CARE NOT TO DISTURB ADJACENT PROPERTIES AND SHOULD ANTICIPATE HAND CLEARING, CUTTING, STUMP GRINDING AND REMOVAL FOR THE WORK TO PREVENT DAMAGE.
16. CONTRACTOR SHALL ENSURE POSITIVE DRAINAGE SO THAT RUNOFF WILL FLOW BY GRAVITY AWAY FROM ADJACENT PROPERTIES TO NEW OR EXISTING STORM DRAIN INLETS, SWALES, DITCHES OR RETENTION AREAS TO THE GREATEST EXTENT PRACTICABLE.
17. GUMBO – WHERE GUMBO OR OTHER PLASTIC CLAYS ARE ENCOUNTERED, THEY SHALL BE REMOVED WITHIN THE ROADWAY AND PARKING AREAS ONE FOOT BELOW THE SUBGRADE EXTENDING HORIZONTALLY TO THE OUTSIDE EDGE OF THE SHOULDER AREA.
18. HARDPAN – IF HARDPAN IS ENCOUNTERED IN THE SWALE AREA, IT WILL BE REMOVED TO A WIDTH OF TWO FEET AT THE SWALE INVERT AND REPLACED WITH GRANULAR MATERIAL.
19. MUCK, PEAT AND DELETERIOUS MATERIALS ENCOUNTERED IN THE ROADWAY SHALL BE REMOVED COMPLETELY TO THE MAXIMUM EXTENT POSSIBLE AND SHALL BE BACKFILLED WITH GRANULAR MATERIAL AND IN NO CASE SHALL REMAIN UNDER ANY PAVED AREAS.
20. WHERE SOD IS DESIRED, LOWER THE GROUND 2 INCHES BELOW THE FINISHED GRADE TO ALLOW FOR THE THICKNESS OF THE SOD.
21. PIPE BACKFILL – REQUIREMENTS FOR PIPE BACKFILL CROSSING ROADS OR PARKING AREAS SHALL BE DEFINED IN THE FLORIDA D.O.T. SPECIFICATIONS, LATEST EDITION. PIPELINE BACKFILL SHALL BE PLACED IN SIX INCH LIFTS AND COMPACTED TO 100% OF THE STANDARD PROCTOR (A.A.S.H.T.O.) T–99 SPECIFICATIONS.
22. UTILITIES – IT IS THE CONTRACTOR'S RESPONSIBILITY TO ASCERTAIN THE EXACT LOCATIONS OF ALL EXISTING UNDERGROUND UTILITIES, WHETHER SHOWN OR NOT, PRIOR TO CONSTRUCTION. CONTRACTOR SHALL NOTIFY ALL UTILITY COMPANIES PRIOR TO CONSTRUCTION. NOTIFY ENGINEER PRIOR TO CONSTRUCTION OF ANY DEVIATION FROM WHAT IS SHOWN ON THE PLAN.
23. ALL PIPE LENGTHS AND CENTERLINE SLOPE LENGTHS SHOWN ON THESE DRAWINGS ARE SCALED DISTANCES. THE CONTRACTOR SHALL CONFIRM ALL MEASUREMENTS IN THE FIELD AND NOTIFY THE ENGINEER IN WRITING OF ANY DISCREPANCY WITH THE DRAWINGS PRIOR TO PERFORMING THE WORK.
24. INLETS AND MANHOLES – ALL INLETS AND MANHOLES SHALL BE CONSTRUCTED IN ACCORDANCE WITH FLORIDA D.O.T. STANDARDS SPECIFICATIONS, LATEST EDITION AND PALM BEACH COUNTY DESIGN STANDARDS, LATEST EDITION UNLESS OTHERWISE APPROVED BY ENGINEER OF RECORD.
25. REINFORCED CONCRETE PIPE (RCP) – UNLESS OTHERWISE NOTED ON PLANS, THE PIPE SHALL CONFORM WITH THE REQUIREMENTS OF CLASS III OF A.S.T.M. C–76 AND WITH THE FLORIDA D.O.T. SPECIFICATIONS, LATEST EDITION. ALL PIPE JOINTS, INCLUDING THE FIRST JOINT OF PIPE ENTERING OR LEAVING A MANHOLE OR INLET SHALL BE WRAPPED WITH FILTER FABRIC PER F.D.O.T. AND PALM BEACH COUNTY SPECIFICATIONS.
26. CORRUGATED METAL PIPE (CMP) – SHALL CONFORM WITH THE REQUIREMENTS OF AASHTO M36, A.S.T.M. A760 AND WITH THE FLORIDA D.O.T. SPECIFICATIONS, LATEST EDITION. ALL PIPE JOINTS, INCLUDING THE FIRST JOINT OF PIPE ENTERING OR LEAVING A MANHOLE OR INLET SHALL BE WRAPPED WITH FILTER FABRIC PER F.D.O.T. AND PALM BEACH COUNTY SPECIFICATIONS
27. HIGH DENSITY POLYETHYLENE PIPE (HDPE) – SHALL CONFORM WITH ALL AASHTO AND ASTM STANDARDS AND GUIDELINES SPECIFIC TO THE PIPE SIZE, MATERIAL AND INSTALLATION REQUIREMENTS. ALL PIPE JOINTS, INCLUDING THE FIRST JOINT OF PIPE ENTERING OR LEAVING A MANHOLE OR INLET SHALL BE WRAPPED WITH FILTER FABRIC PER F.D.O.T. AND PALM BEACH COUNTY SPECIFICATIONS.
28. ALL PAVING AND DRAINAGE WORK SHALL BE CONSTRUCTED IN FULL ACCORDANCE WITH THE PALM BEACH COUNTY, SOUTH FLORIDA WATER MANAGEMENT DISTRICT AND FDOT LATEST STANDARDS. ANY CONFLICTS BETWEEN THE STANDARDS SHALL BE BROUGHT TO THE ATTENTION OF THE ENGINEER IN WRITING BY THE CONTRACTOR FOR RESOLUTION.
29. ANY EXISTING ROADWAY AND/OR UTILITY THAT IS DAMAGED BY THE CONTRACTOR SHALL BE CORRECTED AT THE CONTRACTOR'S EXPENSE TO THE SATISFACTION OF THE ENGINEER.
30. SUBGRADE – SHALL BE STABILIZED TO LBR 40 AND COMPACTED AS NOTED ON THE PLANS TO MEET THE DENSITY REQUIREMENTS AS DETERMINED BY THE A.A.S.H.T.O. T–180 SPECIFICATIONS. SUBGRADE SHALL EXTEND 12 INCHES BEYOND THE PROPOSED EDGE OF PAVEMENT AND/OR 6" BEYOND VALLEY GUTTER, TYPE "F" CURB & GUTTER OR TYPE "D" CURB. SUBGRADE SHALL BE 12 INCHES THICK COMPACTED TO 98% ACCORDING TO A.A.S.H.T.O. T–180. ALL MUCK, STUMPS, ROOTS OR OTHER DELETERIOUS MATTER ENCOUNTERED IN THE PREPARATION OF THE SUBGRADE SHALL BE REMOVED IN ACCORDANCE WITH NOTE 15.
31. BASE – SHALL BE FDOT APPROVED LIMEROCK MATERIAL SHALL BE COMPACTED TO NOT LESS THAN 98% MAXIMUM DENSITY AS DETERMINED BY A.A.S.H.T.O. T–180 SPECIFICATIONS AND AS CALLED FOR IN FLORIDA D.O.T. SPECIFICATIONS, LATEST EDITION. BASE SHALL BE PLACED AND COMPACTED IN TWO (2) EQUAL LAYERS WHEN PLACED IN MULTIPLE LIFTS. ALTERNATE APPROVED BASE MATERIALS MAY BE UTILIZED AT THE DISCRETION OF THE ENGINEER AND WITH APPROVAL FROM PALM BEACH COUNTY.
32. PRIME COAT – BITUMINOUS PRIME COAT SHALL CONFORM WITH THE REQUIREMENTS OF THE FLORIDA D.O.T. SPECIFICATIONS, LATEST EDITION AND SHALL BE APPLIED AT THE RATE OF 0.25 GALLONS PER SQUARE YARD, UNLESS A LOWER RATE IS DIRECTED BY THE ENGINEER.
33. TACK COAT – BITUMINOUS TACK COAT SHALL CONFORM WITH THE REQUIREMENTS OF THE FLORIDA D.O.T. SPECIFICATIONS, LATEST EDITION AND SHALL BE APPLIED AT THE RATE OF 0.08 GALLONS PER SQUARE YARD, UNLESS A VARIATION IS APPROVED BY THE ENGINEER.
34. SURFACE COURSE – ASPHALTIC CONCRETE SURFACE COURSE SHALL CONFORM WITH THE REQUIREMENTS OF THE FLORIDA D.O.T. SPECIFICATIONS, LATEST EDITION. THE MINIMUM COMPACTED THICKNESS TO BE AS NOTED ON PLANS.
35. PAVEMENT MARKINGS – SHALL BE IN ACCORDANCE WITH THE MANUAL OF UNIFORM TRAFFIC CONTROL DEVICES FOR STREETS AND HIGHWAYS, THE PALM BEACH COUNTY DESIGN STANDARDS AND THE REQUIREMENTS OF THE FLORIDA D.O.T. SPECIFICATIONS, LATEST EDITION.
36. CONCRETE – ALL CONCRETE SHALL DEVELOP 2500 P.S.I. (MINIMUM) 28 DAY COMPRESSIVE STRENGTH OR GREATER WHERE NOTED ON PLANS. CLASS I CONCRETE SHALL CONFORM WITH THE FLORIDA D.O.T. SPECIFICATIONS, LATEST EDITION. CLASS I CONCRETE USED AS PAVING SHALL DEVELOP 3000 P.S.I. (MINIMUM) 28 DAYS COMPRESSIVE STRENGTH.
37. ATTENTION IS DIRECTED TO THE FACT THAT THESE PLANS MAY HAVE BEEN CHANGED IN SIZE BY REPRODUCTION. THIS MUST BE CONSIDERED WHEN OBTAINING SCALED DATA.
38. THE CONTRACTOR SHALL CONFINE CONSTRUCTION ACTIVITIES TO OWNER–SUPPLIED PROPERTY, EASEMENTS AND RIGHTS–OF–WAYS.
39. APPROVAL OF THIS PLAN IS NOT AN AUTHORIZATION TO GRADE ADJACENT PROPERTIES. WHEN FIELD CONDITIONS WARRANT OFF–SITE GRADING, PERMISSION MUST BE OBTAINED FROM THE AFFECTED PROPERTY OWNERS AND COORDINATED WITH ENGINEER OF RECORD.
40. MAINTENANCE OF TRAFFIC SHALL BE THE RESPONSIBILITY OF THE CONTRACTOR AND SHALL BE IN ACCORDANCE WITH THE FDOT DESIGN STANDARDS, LATEST EDITION.
41. CLEAN UP: THE CONTRACTOR SHALL KEEP THE CONSTRUCTION SITE FREE OF RUBBISH AND WASTE MATERIALS AND RESTORE TO THEIR ORIGINAL CONDITION THOSE PORTIONS OF THE SITE NOT DESIGNATED FOR ALTERATION BY THE CONTRACT DOCUMENTS. CLEAN UP AND RESTORATION SHALL BE ACCOMPLISHED ON A DAILY BASIS THROUGHOUT THE CONTRACT PERIOD.
42. THE CONTRACTOR SHALL PROVIDE AND MAINTAIN ADEQUATE SIGNS, BARRICADES, FLASHING LIGHTS, FLAGMEN, AND WATCHMEN AND TAKE ALL NECESSARY PRECAUTIONS FOR THE PROTECTION OF THE WORK AND THE SAFETY OF THE PUBLIC. TRAFFIC CONTROL WARNING SIGNS AND BARRICADES SHALL BE IN STRICT ACCORDANCE WITH THE PROVISIONS OF THE FLORIDA DEPARTMENT OF TRANSPORTATION, MANUAL ON TRAFFIC CONTROLS AND SAFE PRACTICES FOR STREET AND HIGHWAY CONSTRUCTION, MAINTENANCE AND UTILITY OPERATION (LATEST REVISION). WHERE APPLICABLE ALL BARRICADES AND OBSTRUCTIONS SHALL BE PROTECTED AT NIGHT BY FLASHING SIGNAL LIGHTS WHICH SHALL BE KEPT BURNING FROM SUNSET TO SUNRISE. BARRICADES SHALL BE OF SUBSTANTIAL CONSTRUCTION AND SUITABLE FOR NIGHT VISIBILITY. SUITABLE WARNING SIGNS SHALL BE SO PLACED AND ILLUMINATED AT NIGHT AS TO SHOW IN ADVANCE WHERE CONSTRUCTION, BARRICADES OR DETOURS EXIST (AS NECESSARY).
43. SHOULD DEWATERING BE REQUIRED FOR THE INSTALLATION OF UNDERGROUND STRUCTURES, DISCHARGES SHALL BE CONTAINED ONSITE. LOCATION OF IMPOUNDMENT SHALL BE WITHIN THE PROPOSED RETENTION AREAS. A WATER USE PERMIT IS REQUIRED FOR DEWATERING ACTIVITIES. THE CONTRACTOR SHALL BE RESPONSIBLE FOR OBTAINING DEWATERING PERMITS PRIOR TO COMMENCEMENT OF CONSTRUCTION.
44. CONTRACTOR SHALL PUT INTO PLACE SUCH TEMPORARY EROSION CONTROL MEASURES AS INDICATED ON THE PLANS. THESE MEASURES SHALL BE INSPECTED AND EVALUATED DURING CONSTRUCTION OPERATION FOR THEIR EFFECTIVENESS IN PREVENTING EROSION MATERIAL AND SEDIMENT FROM DISCHARGING FROM THE WORK AREA. IF REQUIRED, AND AS DIRECTED BY THE CITY INSPECTOR, ADDITIONAL TEMPORARY EROSION CONTROL MEASURES SHALL BE INSTITUTED AND INSTALLED. ALL BEST MANAGEMENT PRACTICES ITEMS (EG. SILT FENCE, CONSTRUCTION ENTRANCES, ETC.) SHALL BE IN CONFORMANCE WITH THESE PLANS AND THE FDOT DESIGN STANDARDS, LATEST EDITION.
45. EROSION AND SEDIMENT CONTROL MEASURES SHALL BE IN PLACE PRIOR TO EARTHMOVING ACTIVITIES. ADDITIONAL EROSION AND SEDIMENT CONTROL MEASURES MAY BE REQUIRED. THE CONTRACTOR SHALL MAINTAIN A LOG OF CHANGES TO THE EROSION AND SEDIMENT CONTROL MEASURES INSTALLED OR REMOVED FROM THE SITE. A NPDES GENERAL NOI PERMIT FOR CONSTRUCTION ACTIVITIES SHALL BE OBTAINED FOR THE CONSTRUCTION ACTIVITIES PROPOSED IN THESE PLANS AND THE CONTRACTOR SHALL MAINTAIN INSPECTION RECORDS IN ACCORDANCE WITH THE NPDES PERMIT REQUIREMENTS.
46. GUARANTEE – ALL MATERIAL AND EQUIPMENT TO BE FURNISHED AND/OR INSTALLED BY THE CONTRACTOR UNDER THIS CONTRACT SHALL BE GUARANTEED FOR A PERIOD OF ONE YEAR FROM THE DATE OF ACCEPTANCE THEREOF AGAINST DEFECTIVE MATERIALS, DESIGN AND WORKMANSHIP. UPON NOTICE FROM THE OWNER OF FAILURE OF ANY PARTS OR MATERIALS, THOSE PARTS OR MATERIALS SHALL BE REPLACED PROMPTLY AT NO EXPENSE TO THE OWNER.

UTILITY CONSTRUCTION NOTES

GENERAL NOTES:

1. PRIOR TO CONSTRUCTION IT IS THE RESPONSIBILITY OF THE CONTRACTOR TO FIELD VERIFY (ELEVATION & LOCATION) ALL EXISTING UTILITIES. ANY DISCREPANCIES SHALL BE BROUGHT TO THE ATTENTION OF THE ENGINEER PRIOR TO CONTINUATION OF WORK.
2. ALL WATER MAINS (BLUE), FORCE MAINS (GREEN) AND RECLAIMED WATER MAINS (PURPLE) SHALL BE P.V.C. (C–900) UNLESS A DIFFERENT MATERIAL IS OTHERWISE NOTED.
3. FIRE HYDRANTS SHALL BE CONNECTED USING DUCTILE IRON PIPE.
4. VALVES SHALL NOT BE PLACED IN CURBS.
5. ALL WATER AND SANITARY SERVICES SHALL BE CONSTRUCTED A MINIMUM OF 5' FROM DRAINAGE STRUCTURES.
6. PRESSURE TESTING AND CERTIFICATION SHALL FOLLOW THE PALM BEACH COUNTY WATER UTILITIES DEPARTMENT MINIMUM ENGINEERING AND CONSTRUCTION STANDARDS (LATEST EDITION).
7. ALL WATER MAINS TO CROSS OVER SANITARY SEWER SERVICES, WHERE 12" MINIMUM CLEARANCE CANNOT BE MAINTAINED, 20 LINEAR FEET OF DUCTILE IRON WATER MAIN SHALL BE CENTERED ON THE CROSSING. THE SEWER SERVICE SHALL BE C–900, SDR–18 IF THE SEWER SERVICE IS ABOVE THE WATER MAIN WITH LESS THAN 12" MINIMUM SEPARATION. IN NO CASE SHALL THERE BE LESS THAN 6" CLEARANCE.
8. RECORD DRAWINGS SHALL INCLUDE ALL UTILITY OBJECTS AND ASSOCIATED LOCATIONS IDENTIFIED AS REQUIRED BY PALM BEACH COUNTY WATER UTILITIES DEPARTMENT AND SHOWN IN THE AS–BUILT LOCATION.
9. ALL RECORD DRAWINGS SHALL BE DRAWN IN THE STATE PLANE COORDINATE SYSTEM. STATE PLANE COORDINATES ARE REQUIRED FOR ALL AS–BUILT UTILITY OBJECTS AS REQUIRED BY PALM BEACH COUNTY WATER UTILITIES DEPARTMENT. ALL UTILITY FEATURES SHALL BE SHOWN IN THEIR AS–BUILT LOCATION.
10. ELEVATIONS – ALL ELEVATIONS REFER TO NORTH AMERICAN VERTICAL DATUM OF 1988.
11. COMPREHENSIVE WATER AND SEWER UTILITY RECORD DRAWINGS FOR THE ENTIRE SITE, INCLUDING UTILITY EASEMENT LOCATIONS, ARE REQUIRED PRIOR TO WATER METER RELEASE.
12. FIRE SPRINKLER RISERS SHALL BE LOCATED ON EXTERIOR OF BUILDINGS.
13. FIRE LINE REQUIRES INSPECTION BY PALM BEACH COUNTY FIRE MARSHAL PRIOR TO BACKFILL & COMPACTION.

RECORD DRAWING NOTES:

1. RECORD DRAWINGS SHALL BE PREPARED IN THE STATE PLANE COORDINATE SYSTEM.
2. ALL UTILITY FEATURES SHALL BE SHOWN IN THEIR AS–BUILT LOCATION.
3. STATE PLANE COORDINATES SHALL BE DISPLAYED ON RECORD DRAWINGS FOR ALL FEATURES SPECIFIED IN PBCWUD STANDARDS.
4. STATE PLANE COORDINATES SHALL BE SHOWN ON PROPERTY CORNERS AS REQUIRED BY PBCWUD.

WUD FACILITIES & FPL ELECTRICAL CONDUIT NOTE:

1. A MINIMUM 1.5' (18") SEPARATION IS REQUIRED BETWEEN ANY ELECTRICAL CONDUIT INSTALLED FOR THE FPL FEEDERS BETWEEN THE FPL TRANSFORMERS AND ANY WUD WATER AND WASTEWATER MAINS. THOSES ELECTRICAL CONDUITS SHALL BE SHOWN ON THE WUD WATER & WASTEWATER AS–BUILT DRAWINGS WHERE THEY CROSS THE WUD MAINS WITH AS–BUILT DATA THAT SHALL INCLUDE SEPARATION AND COORDINATES LOCATING THE CROSSING.

HYDRANT SECURITY EQUIPMENT:

1. THE EXISTING FIRE HYDRANT CAN BE RELOCATED PROVIDED IT IS IN ACCEPTABLE WORKING ORDER BASED ON THE PROJECT'S WUD INSPECTOR'S INSPECTION. IF NOT IN PROPER WORKING CONDITION A NEW FIRE HYDRANT WILL BE REQUIRED. IN EITHER CASE CAPTIVATOR CAPS ARE REQUIRED PER NOTE 2 BELOW.
2. FIRE HYDRANT SHALL BE EQUIPPED WITH A SET OF AFC "CAPTIVATER" SECURITY CAPS. THE CAPS SHALL BE CHAINED TO THE HYDRANT BODY AND INSTALLED PRIOR TO ISSUANCE OF "CONSTRUCTION WATER RELEASE" CERTIFICATION. A SCHEDULED INSPECTION BY PBCWUD IS REQUIRED TO VERIFY THE INSTALLATION AND OPERATION OF THE CAPS.
3. PLEASE NOTE THAT THE SECURITY CAPS CAN ONLY BE REMOVED USING SPECIAL WRENCHES. THE CONTRACTOR SHALL CONTACT THE PBCWUD INSPECTOR FOR ASSISTANCE IF ACCESS TO THE HYDRANT IS REQUIRED FOR FLUSHING OR TESTING PURPOSES.
4. ALL NEW FIRE HYDRANTS ARE TO BE INSTALLED SO THE PUMPER NOZZLE IS 5.0' MIN WITH RAISED CURB OR 6.0' MIN WITHOUT RAISED CURB AND 12.0' MAX FROM THE EDGE OF PAVEMENT.

GENERAL WATER NOTES:

1. ALL WATER MAIN DUCTILE IRON PIPE AND PIPE FITTINGS SHALL BE PAINTED WITH A 4" WIDE CONTINUOUS BLUE LINE THAT RUNS PARALLEL TO THE AXIS OF THE PIPE AND IS LOCATED ALONG THE TOP OF THE PIPE.
2. ALL WATER MAINS SHALL BE MARKED WITH ONE CONTINUOUS STRIP OF 6" WIDE MAGNETIC BLUE CODED TAPE IMPRINTED WITH ONE AND ONE HALF (1–1/2) INCH HIGH LETTERING READING "CAUTION – WATER LINE BURIED BELOW" AND LOCATED APPROXIMATELY TWELVE (12) INCHES ABOVE THE CROWN OF THE PIPE. THE WORDING SHALL OCCUR EVERY THREE (3) FEET.
3. ALL WATER SERVICE BRASS FITTINGS ARE REQUIRED TO BE LEAD FREE.
4. ALL EXISTING PBCWUD FACILITIES (IE. VALVES) TO BE OPERATED BY PBCWUD PERSONNEL ONLY.

GENERAL SEWER NOTES:

1. ON–SITE SEWER LATERALS AND LIFT STATION UP TO GV#5 ARE PRIVATELY OWNED AND MAINTAINED.
2. SEWER CLEANOUT MINI–MANHOLES ARE REQUIRED ON ALL CLEANOUTS WITHIN PAVEMENT AREAS.
3. SEWER SERVICE FOR 8431 LAKE WORTH ROAD SHOULD NOT BE INTERRUPTED AND 10 BUSINESS DAYS PRIOR NOTICE MUST BE GIVEN.

GENERAL LANDSCAPE NOTE:

1. IF ANY NEW LANDSCAPE MATERIALS ARE INSTALLED AS PART OF THIS PROJECT THEN SOD ONLY WITH NO SHRUBS AND/OR TREES ARE TO BE INSTALLED WITHIN 5' OF ANY WATER METER AND WITHIN 7.5' OF ANY FIRE HYDRANT. TREES CANNOT BE INSTALLED WITHIN 10' OF A WUD WATER OR FORCE MAIN WITHOUT PRIOR PBCWUD APPROVAL AND THE INSTALLATION OF A ROOT BARRIER. ALSO IF ANY EXISTING TREES ARE LESS THAN 10' MINIMUM OF ANY NEW WATER OR FORCE MAIN A ROOT BARRIER IS REQUIRED TO BE INSTALLED OR TREE RELOCATED/REMOVED.

PAVEMENT MARKING AND SIGNAGE NOTES

1. OBTAIN ALL REQUIRED PERMITS AND APPROVALS.
2. NOTIFY ALL REGULATORY AGENCIES AT LEAST 48 HOURS PRIOR TO COMMENCEMENT.
3. ALL PAVEMENT MARKING AND SIGNAGE SHALL BE INSTALLED IN ACCORDANCE WITH PALM BEACH COUNTY, AASHTO, MUTCD AND FDOT WHEREVER APPLICABLE. INSTALLATION SHALL INCLUDE PLACEMENT OF ALL REQUIRED REFLECTIVE PAVEMENT MARKERS (RPM'S).
4. CONTRACTOR SHALL VERIFY ALL EXISTING UNDERGROUND UTILITIES WITHIN PROJECT LIMITS AND SHALL NOTIFY ENGINEER IN WRITING OF ANY DISCREPANCIES ON THE PLANS.
5. CONTRACTOR SHALL MAINTAIN A CLEAN WORK ENVIRONMENT AND SHALL PROPERLY DISPOSE OF ANY DEBRIS AT THE END OF EACH DAY UNLESS OTHERWISE APPROVED BY OWNER.
6. CONTRACTOR SHALL BE RESPONSIBLE FOR ALL MAINTENANCE OF TRAFFIC THROUGHOUT THE DURATION OF CONSTRUCTION.
7. CONTRACTOR SHALL TAKE REASONABLE CARE NOT TO DAMAGE ANY SURROUNDING EXISTING PROPERTIES OR IMPROVEMENTS. ANY DAMAGES SHALL BE PROMPTLY REPAIRED TO ORIGINAL OR BETTER CONDITION TO THE SATISFACTION OF THE OWNER AND/OR ENGINEER.
8. ALL PERMANENT SIGNAGE SHALL REMAIN COVERED UNTIL SUCH TIME AS CONSTRUCTION IS COMPLETE AND CONSTRUCTION MAINTENANCE OF TRAFFIC SIGNAGE IS REMOVED.
9. PAVEMENT MARKINGS & SIGNINGS SHALL BE IN ACCORDANCE WITH THE MANUAL OF UNIFORM TRAFFIC CONTROL DEVICES FOR STREETS & HIGHWAYS AND PALM BEACH COUNTY DESIGN STANDARDS.
10. STOP BARS AND STRIPING WITHIN THE CITY OF BOYNTON BEACH RIGHT OF WAY TO BE THERMOPLASTIC. ALL ONSITE STRIPING TO BE PAINT.

STORMWATER POLLUTION PREVENTION NOTES

1. ALL CONTRACTORS AND SUBCONTRACTORS ON THE SITE SHALL UTILIZE NPDES BEST MANAGEMENT PRACTICES THROUGHOUT THE DURATION OF CONSTRUCTION IN ORDER TO PREVENT THE DISCHARGE OF UNCONFINED SOILS AND PARTICULATE MATTER BEYOND THE PROJECT BOUNDARIES.
2. ALL ADJACENT STORM SEWER INLET GRATES AND INLETS WITH THE POTENTIAL FOR IMPACT DURING CONSTRUCTION SHALL BE COVERED WITH FILTER FABRIC (OR APPROVED EQUAL) THROUGHOUT THE DURATION OF DEMOLITION AND CONSTRUCTION AND PROTECTED FROM SEDIMENTATION RESULTING FROM SOIL EROSION.
3. CONTRACTOR SHALL, AT A MINIMUM, PUT INTO PLACE SUCH TEMPORARY EROSION CONTROL MEASURES AS INDICATED ON THE PLANS. THESE MEASURES SHALL BE INSPECTED AND EVALUATED DURING CONSTRUCTION AND DEMOLITION OPERATIONS FOR THEIR EFFECTIVENESS IN PREVENTING EROSION MATERIAL AND SEDIMENT FROM DISCHARGING FROM THE WORK AREA. IF REQUIRED, AND AS DIRECTED BY THE LOCAL BUILDING OFFICIAL OR PROJECT ENGINEER, ADDITIONAL TEMPORARY EROSION CONTROL MEASURES SHALL BE INSTITUTED AND INSTALLED. ALL BEST MANAGEMENT PRACTICES ITEMS (EG. SILT FENCE, CONSTRUCTION ENTRANCES, ETC.) SHALL BE IN CONFORMANCE WITH FLORIDA DEPARTMENT OF ENVIRONMENTAL PROTECTION GENERIC PERMIT FOR STORMWATER DISCHARGE FROM LARGE AND SMALL CONSTRUCTION ACTIVITIES, RULE 62–621.003
(4)(a), F.A.C., AND THE FDOT DESIGN STANDARDS INDEX 102 FOR TEMPORARY EROSION CONTROL AND WATER QUALITY, 2010 EDITION (AS APPLICABLE).
4. EROSION AND SEDIMENT CONTROL MEASURES SHALL BE IN PLACE PRIOR TO ANY CLEARING, DEMOLITION OR EARTHMOVING ACTIVITIES. ADDITIONAL EROSION AND SEDIMENT CONTROL MEASURES MAY BE REQUIRED AS NEEDED AFTER COMMENCEMENT OF CONSTRUCTION. THE CONTRACTOR SHALL MAINTAIN A LOG OF CHANGES TO THE EROSION AND SEDIMENT CONTROL MEASURES INSTALLED OR REMOVED FROM THE SITE. A NPDES GENERAL NOI PERMIT FOR CONSTRUCTION ACTIVITIES SHALL BE OBTAINED FOR THE CONSTRUCTION ACTIVITIES PROPOSED IN THESE PLANS AND THE CONTRACTOR SHALL MAINTAIN INSPECTION RECORDS IN ACCORDANCE WITH THE NPDES PERMIT REQUIREMENTS.
5. THE CONTRACTOR SHALL BE RESPONSIBLE FOR THE PROCURING AND ABATEMENT APPROVALS FOR LEAD, ASBESTOS, MERCURY AND RODENTS PRIOR TO DEMOLITION AS REQUIRED BY LOCAL, STATE AND FEDERAL JURISDICTIONS HAVING AUTHORITY.
6. IF ANY HAZARDOUS MATERIALS ARE ENCOUNTERED, THE OWNER SHALL BE NOTIFIED. THOSE MATERIALS SHALL BE REMOVED AND DISPOSED OF IN A MANNER APPROVED BY ALL GOVERNING AGENCIES AND IN A LANDFILL OR DISPOSAL FACILITY LICENSED TO ACCEPT THE HAZARDOUS MATERIAL.
7. PREDEMOLITION PHOTOGRAPHS SHALL BE TAKEN SHOWING EXISTING CONDITIONS OF THE SITE AND ADJACENT BUILDINGS TO REMAIN. PHOTOS SHALL INCLUDE DAMAGE TO FINISH SURFACES THAT MIGHT BE MISCONTRUED AS DAMAGE CAUSED BY DEMOLITION OPERATIONS.
8. THE CONTRACTOR MUST VISIT THE SITE AND STUDY EXISTING PHYSICAL CONDITION AND NOTIFY THE ENGINEER OR ARCHITECT OF ANY DISCREPANCIES ON DRAWINGS PRIOR TO COMMENCEMENT OF DEMOLITION AND CONSTRUCTION ACTIVITIES.
9. CONTRACTOR SHALL CALL SUNSHINE ONE CALL 72 HOURS PRIOR TO COMMENCEMENT OF DEMOLITION AND CONSTRUCTION ACTIVITIES. IF ANY CONFLICTS ARISE AS A RESULT OF FIELD UNDERGROUND UTILITY LOCATES AND DESIGNATIONS, THE CONTRACTOR SHALL BE RESPONSIBLE TO NOTIFY THE ENGINEER AND ARCHITECT IN WRITING PRIOR TO COMMENCEMENT ONSITE ACTIVITIES. FAILURE OF THE CONTRACTOR TO NOTIFY THE ENGINEER AND ARCHITECT IN WRITING SHALL BE DEEMED ACCEPTANCE OF EXISTING CONDITIONS "AS IS, WHERE IS" AND SHALL RELIEVE THE ENGINEER AND ARCHITECT OF ANY LIABILITY ASSOCIATED WITH EXISTING CONDITIONS. FURTHER THE CONTRACTOR SHALL INDEMNIFY AND HOLD HARMLESS THE ENGINEER AND ARCHITECT FOR ANY EXISTING AND OR UNFORSEEN CONDITIONS THAT MAY RESULT IN ANY FORM OF LIABILITY.
10. ALL CONTRACTORS AND SUBCONTRACTORS MUST SIGN AND DATE THE FOLLOWING CERTIFICATION STATEMENT BEFORE CONDUCTING LAND DISTURBING ACTIVITIES ON THE SITE AS APPLICABLE:

    "I CERTIFY UNDER THE PENALTY OF LAW THAT I UNDERSTAND, AND SHALL COMPLY WITH THE TERMS AND CONDITIONS OF THE STATE OF FLORIDA GENERIC PERMIT FOR STORMWATER DISCHARGE FROM LARGE AND SMALL CONSTRUCTION ACTIVITIES AND THIS STORMWATER POLLUTION PREVENTION PLAN PREPARED THERE UNDER."

CALL BEFORE YOU DIG
Sunshine State One Call 811 OF FLORIDA, INC.
811 or (800) 432-4770

GENERAL NOTES
FOR
OXYGEN DEVELOPMENT
PALM SPRINGS, FLORIDA

REVISIONS	DATE	BY	CK

EB 9889
LDi
Last Devenport, Inc.
1860 Old Okeechobee Road, Suite 504
West Palm Beach, FL 33409
phone (561)615-6567 fax (561)683-0872

SCALE: N/A
DATE: 10/26/22
DESIGNED BY:SG
CHECKED BY:SG
DRAWING FILE: 22-006-C.9

10/26/2022
SCOTT M. GINTERT, P.E.
FLORIDA P.E. #84228

22-006 C.9

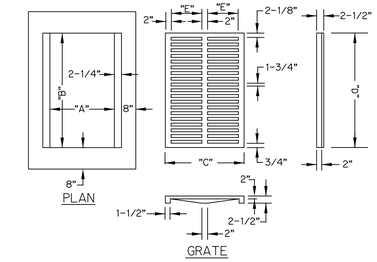

TYPE INLET	"A"	"B"	"C"	"D"	"E"	MAX. SIZE R.C.P.
"C"	2'-0"	3'-1"	2'-4"	3'-0"	11"	18"
"E"	3'-0"	4'-6"	3'-4"	4'-4"	1'-5"	30"
"E MOD"*	3'-0"	4'-6"	3'-4"	4'-4"	1'-5"	48"

GENERAL NOTES

BEVELED EDGES: ALL EXPOSED CORNERS AND EDGES TO BE CHAMFERED 3/4"

FOUNDATION MATERIAL: WHERE MATERIAL UNSATISFACTORY FOR FOUNDATION IS ENCOUNTERED AT FLOW LINE OMIT FLOOR AND CARRY WALLS DOWN TO SATISFACTORY FOUNDATION BACKFILL TO FLOW LINE WITH CLEAN SAND.

GRATES: CAST IRON GRATES IN ACCORDANCE WITH FLA. D.O.T. SPECS.

* INLET TYPES: INLETS ARE TO BE AS SHOWN HEREON. TYPE "E MOD" IS A TYPE "E" TURNED 90° TO RECEIVE R.C.P. UP TO 48" DIA. INLETS RECEIVING R.C.P. LARGER THAN 48" DIA. SHALL BE IN ACCORDANCE WITH FLA. D.O.T. STANDARDS.

MATERIAL: INLET WALLS AND FOOTING MAY EITHER POURED-IN-PLACE 2500 LB. CONC.; OR PRECAST CLASS "A" 3000 LB. CONC.

ALL INLET CONSTRUCTION IS IN ACCORDANCE WITH THE CURRENT F.D.O.T. STANDARDS INDEX NO. 201 & 232.

ALL INLET GRATES TO BE SECURED WITH A LOCKING CHAIN PER F.D.O.T. INDEX 201

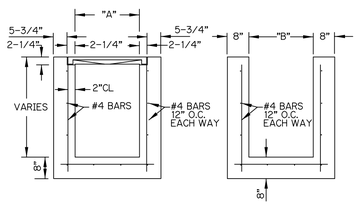

INLET DETAIL

N.T.S.

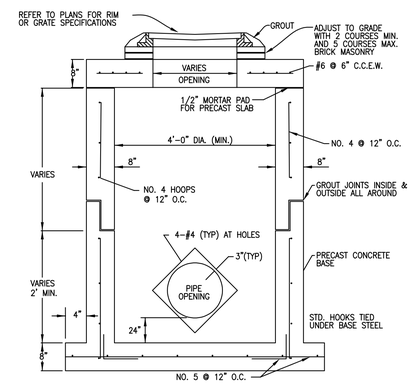

ALL REINFORCING TO MEET CURRENT F.D.O.T. SPECIFICATIONS

THIS STRUCTURE MAY BE SUBSTITUTED WITH OTHER STRUCTURES ONLY IF THE STANDARDS HAVE BEEN MET.

DRAINAGE STRUCTURES

N.T.S.

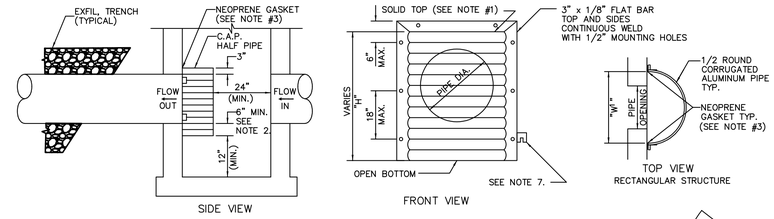

PIPE DIA.	W[1] (IN)	W[2] (IN)	T (GAUGE)	H (IN)
15"	21"	21"	16	VARIES
18"	24"	24"	16	VARIES
21"	30"	30"	16	VARIES
24"	30"	36"	16	VARIES
30"	36"	42"	14	VARIES
36"	42"	48"	14	VARIES
42"	48"	54"	14	VARIES
48"	54"	60"	14	VARIES
54"	60"	66"	14	VARIES

1. RECTANGULAR STRUCTURE
2. ROUND STRUCTURE

NOTES:

1. ALUMINUM SHEET OF SAME THICKNESS (GAUGE) AS PIPE SHALL BE WELDED TO CLOSE OPENING AT THE TOP.
2. THE BOTTOM ELEVATION OF THE POLLUTION RETARDANT BAFFLE MUST BE AT LEAST 2' BELOW CONTROL ELEVATION.
3. NEOPRENE ADHESIVE BACKED GASKET, OR APPROVED EQUAL (1" x 2") SHALL BE INSTALLED ON THE SIDES AND TOP OF ALL BAFFLES.
4. POLLUTION RETARDANT BAFFLE TO BE FASTENED IN PLACE WITH 3/8"x4" STAINLESS STEEL "RED HEADS", OR APPROVED EQUAL.
5. ALL EXFILTRATION TRENCHES SHALL HAVE A POLLUTION RETARDANT BAFFLE AT EACH CONNECTION POINT TO A STRUCTURE.
6. FIBERGLASS BAFFLES ARE NOT PERMITTED.
7. MOUNTING BRACKETS MAY BE ADDED TO FLAT BARS TO EASE INSTALLATION IN ROUND STRUCTURES. SPACING TO MATCH HOLES IN FLAT BARS.
8. ALTERNATIVE BAFFLES MAY BE USED AS APPROVED BY E.O.R. AND PALM BEACH COUNTY ENGINEERING DEPT.

POLLUTION RETARDANT BAFFLE DETAIL

N.T.S.

STRUCTURE NOTES:

1. POLLUTION RETARDANT BAFFLE IS LOCATED IN THE CONTROL STRUCTURE.

PAVING SPECIFICATIONS / SIDEWALKS				
TYPE	WEARING SURFACE	BASE	SUBGRADE	SIDEWALKS
PARKING LOTS & DRIVES	1.5" TYPE SP STRUCTURAL COURSE (TRAFFIC LEVEL A)	OPTIONAL BASE GROUP 8 COMPACTED TO 98% MAXIMUM DRY DENSITY PER A.A.S.H.T.O. T-180	12" THICK, COMPACTED SUBGRADE, COMPACTED TO 98% MAXIMUM DRY DENSITY PER A.A.S.H.T.O.-180	4" THICK CONCRETE (2500 PSI) WITH 4" COMPACTED BASE. 6" THICK CONCRETE (3,000 PSI) REQUIRED AT DRIVEWAYS

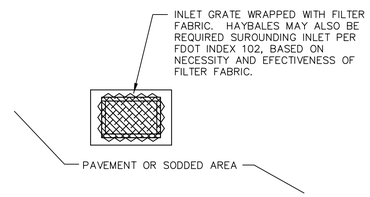

NOTES:
1. ALTERNATE SEDIMENT BARRIER DEVICES MAY BE USED SUCH AS A FILTER SOCK OR FILTER BAG FOR FDOT TYPE 1 THROUGH 10 "P" AND "J" STYLE BOXES.

INLET PROTECTION

N.T.S.

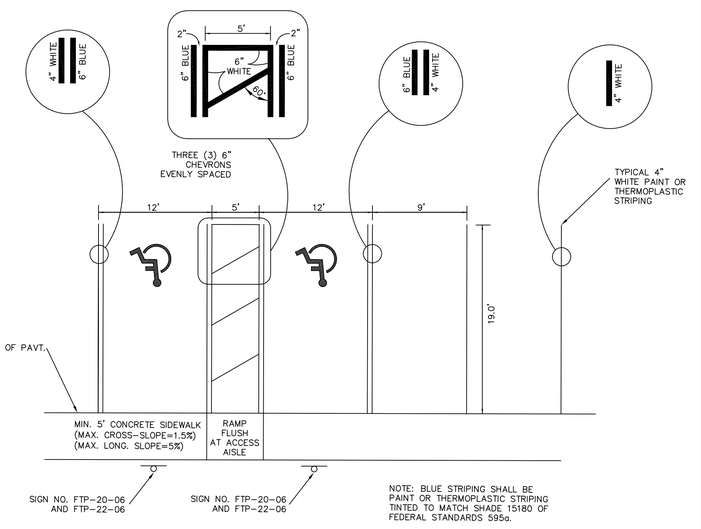

HANDICAP & STANDARD PARKING AND SIGNAGE DETAIL

N.T.S.

NOTE:

1. SEE HANDICAP PARKING AND SIGNAGE DETAIL THIS PAGE FOR STRIPING OF HANDICAP PARKING STALLS
2. ALL STRIPING SHALL BE IN ACCORDANCE WITH PALM BEACH COUNTY DESIGN STANDARDS.

ISOMETRIC VIEW

GENERAL SPECIFICATIONS:

FLAT BLADE: ALCOA #86054.6063-T6 ALLOY, ETCHED, DEGREASED WITH #1200 ALODINE FINISH WITH #3677 GREEN DIAMOND GRADE BACKGROUND AND EQUAL DIMENSIONS - 9" & 12" MIN. H, 24" , 30" , 36" AND 42" L.

LETTERS: NAME - 6" UPPERCASE WITH 4.5" LOWERCASE & 9" UPPERCASE WITH 6.75" LOWERCASE, SERIES 'B' # 3870 DIAMOND GRADE (SILVER) OR EQUAL - SUFFIX - 4.5".

POST: STEEL FLANGED CHANNEL POST 3 LBS. WEIGHT PER FOOT WITH BAKED GREEN ALKYD OR GALVANIZED FINISH PER A.S.T.M. A-123 WITHOUT ANCHOR PLATES. SQUARE POST PER FDOT INDEX 11860.

BRACKETS SHALL BE ATTACHED FIRMLY ON STANDARD SQUARE TUBE OR U-CHANNEL POSTS BY MEANS OF (2) 5/16" DIAMETER HEX HEAD BOLTS.

STOP SIGN: R1-1 MUTCD - DIAMOND GRADE

LOCATION: ONE PER INTERSECTION AS INDICATED ON THE PLANS.

POLICY: 9" BLADES WITH 6" UPPERCASE WITH 4.5" LOWERCASE LETTERS FOR TWO LANE ROADS WITH A SPEED LIMIT UNDER 45 MPH.

12" BLADES WITH 9" UPPERCASE WITH 6.75" LOWERCASE LETTERS FOR:
-THOROUGHFARE ROADS FOUR LANES OR WIDER.
-TWO LANE ROADS WITH A POSTED SPEED LIMIT OF 45 MPH OR MORE. ONLY ONE BLADE WILL BE INSTALLED AT INTERSECTION WITH THOROUGHFARE ROAD INDICATING THE SIDE STREET NAME.

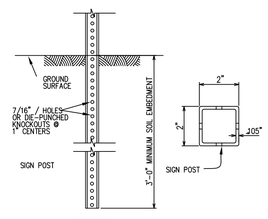

ELEVATION

STEEL SQUARE TUBE POST DETAILS

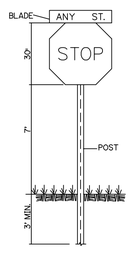

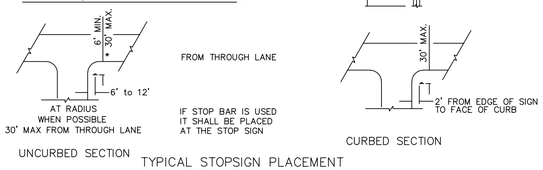

UNCURBED SECTION

CURBED SECTION

TYPICAL STOPSIGN PLACEMENT

STREET NAME SIGN
D3-1

TYP. STREET/STOP SIGN

N.T.S.

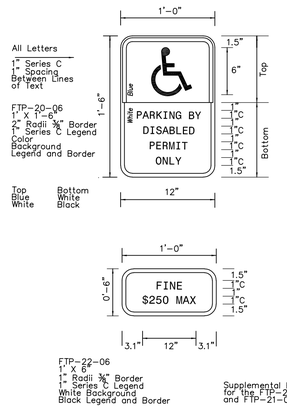

HANDICAP PARKING SIGNAGE DETAIL

N.T.S.

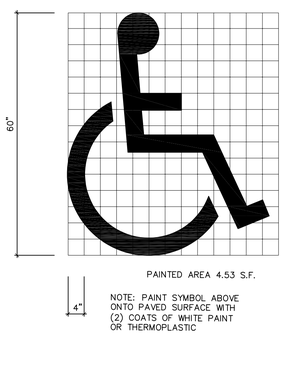

PAINTED AREA 4.53 S.F.

NOTE: PAINT SYMBOL ABOVE ONTO PAVED SURFACE WITH (2) COATS OF WHITE PAINT OR THERMOPLASTIC

HANDICAPPED SYMBOL PARKING DETAIL

N.T.S.

ALL ELEVATIONS INDICATED HEREON ARE NGVD 29
VERTICAL DATUM BASED ON SURVEY PROVIDED BY:
JENNIFER MALIN, PSM #6667
ENGENUITY GROUP, INC. LB #6603
1280 N. CONGRESS AVE., STE. 101
WEST PALM BEACH, FL 33409 TEL:(561) 655-1151

NGVD TO NAVD CONVERSION = NGVD - 1.520 FT

CALL BEFORE YOU DIG
Sunshine State One Call 811
OF FLORIDA, INC.
811 or (800) 432-4770

PAVING, GRADING, & DRAINAGE DETAILS
FOR
OXYGEN DEVELOPMENT
PALM SPRINGS, FLORIDA

REVISIONS	DATE	BY	CK

EB 9889
LDi Last Devenport, Inc.
1860 Old Okeechobee Road, Suite 504
West Palm Beach, FL 33409
phone (561)615-6567 fax (561)683-0872

SCALE: N/A
DATE: 10/26/22
DESIGNED BY:SG
CHECKED BY:SG
DRAWING FILE: 22-006-C.10

10/26/2022
SCOTT M. GINTERT, P.E.
FLORIDA P.E. #84228

22-006 | C.10

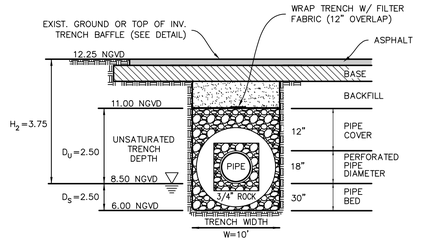

NOTES:

H_2 HEIGHT OF GROUND SURFACE ABOVE DESIGN WATER TABLE

D_U VOLUME OF RUNOFF THAT CAN BE STORED

D_S DEPTH OF TRENCH BELOW WATER TABLE

⚠ EXFILTRATION TRENCH DETAIL A–A

N.T.S.

NOTES:
1. ALL EXFILTRATION TRENCHES SHALL HAVE A POLLUTION RETARDANT BAFFLE AT EACH CONNECTION POINT TO A STRUCTURE. FIBERGLASS BAFFLES ARE NOT PERMITTED.

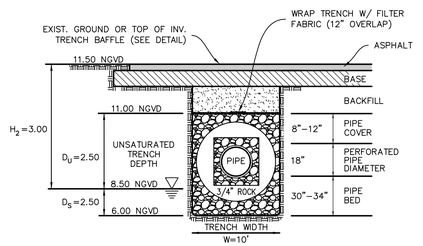

NOTES:

H_2 HEIGHT OF GROUND SURFACE ABOVE DESIGN WATER TABLE

D_U VOLUME OF RUNOFF THAT CAN BE STORED

D_S DEPTH OF TRENCH BELOW WATER TABLE

⚠ EXFILTRATION TRENCH DETAIL B–B

N.T.S.

NOTES:
1. ALL EXFILTRATION TRENCHES SHALL HAVE A POLLUTION RETARDANT BAFFLE AT EACH CONNECTION POINT TO A STRUCTURE. FIBERGLASS BAFFLES ARE NOT PERMITTED.

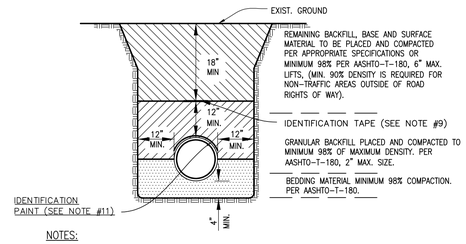

NOTES:

1. BEDDING SHALL CONSIST OF IN-SITU GRANULAR MATERIAL OR WASHED AND GRADED LIMEROCK 3/8" – 7/8" SIZING WITH EQUAL OR GREATER STRUCTURAL ADEQUACY AS EXISTING. UNSUITABLE IN-SITU MATERIALS SUCH AS MUCK, DEBRIS AND LARGER ROCKS SHALL BE REMOVED.
2. THE PIPE SHALL BE FULLY SUPPORTED FOR ITS ENTIRE LENGTH WITH APPROPRIATE COMPACTION UNDER THE PIPE HAUNCHES
3. THE PIPE SHALL BE PLACED IN A DRY TRENCH.
4. BACKFILL SHALL BE FREE OF UNSUITABLE MATERIAL SUCH AS LARGE ROCK, MUCK AND DEBRIS.
5. DENSITY TESTS SHALL BE TAKEN IN 1 FOOT LIFTS ABOVE THE PIPE AT INTERVALS OF 400' MAXIMUM, (MINIMUM 1 SET) OR AS DIRECTED BY THE CONSTRUCTION COORDINATION DIVISION. RESULTS SHALL BE SUBMITTED TO CONSTRUCTION COORDINATION AS PART OF THEIR FIELD REVIEW
6. THE PERMITTEE/DEVELOPER/CONTRACTOR SHALL BE RESPONSIBLE TO COMPLY WITH ALL TRENCH SAFETY LAWS AND REGULATIONS
7. SEE SEPARATE DETAIL FOR PAVED AREAS (OPEN CUT FOR THOROUGHFARE AND NON-THOROUGHFARE ROADS).
8. THE AFFECTED AREA SHALL BE RESTORED TO EQUAL OR BETTER CONDITION OR AS SPECIFIED IN PERMIT/CONTRACT DOCUMENTS.
9. APPROVED MAGNETIC TAPE IS REQUIRED FOR ALL MAIN PRESSURE PIPES AND CONDUIT IN THE COUNTY'S RIGHT-OF-WAY. INSTALL TAPE 18" BELOW FINISHED GRADE.
10. ROOT BARRIER IS REQUIRED FOR APPROVED PIPE INSTALLATION CLOSER THAN 10 FEET FROM AN EXISTING TREE. SEE SEPARATE DETAIL FOR ROOT BARRIER.
11. CONTINUOUS 4" WIDE PAINT STRIPING IS REQUIRED FOR DIP/PCCP WATER MAINS (BLUE), DIP SANITARY FORCE MAINS (GREEN), DIP RECLAIMED WATER MAINS (PURPLE), GAS MAINS (YELLOW), OR AS REQUIRED BY THE APWA.
12. PERMANENT ABOVE GROUND UTILITY MARKER SHALL BE INSTALLED IF REQUIRED.

TYPICAL TRENCH DETAIL (NON–PAVED AREAS)

N.T.S.

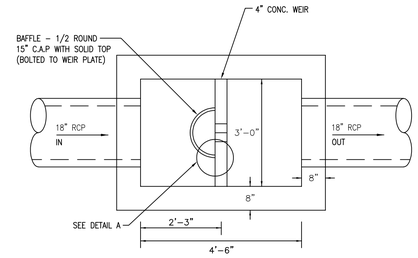

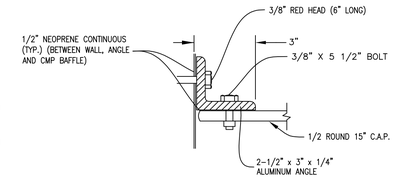

DETAIL A

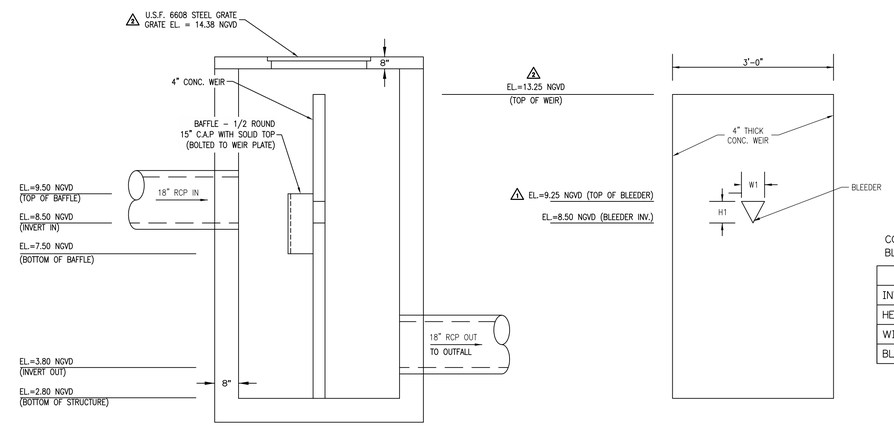

CONTROL STRUCTURE BLEEDER INFORMATION

	CS
INVERT	8.50
HEIGHT (H1)	0.75'
WIDTH (W1)	0.50'
BLEEDER ANGLE	36.87°

⚠

NOTES:

1. CONTROL STRUCTURE CONSTRUCTION AND REINFORCING SHALL COMPLY WITH FDOT STANDARD PLANS FOR ROAD CONSTRUCTION, 425 SERIES (LATEST EDITION).

CONTROL STRUCTURE DETAIL

N.T.S.

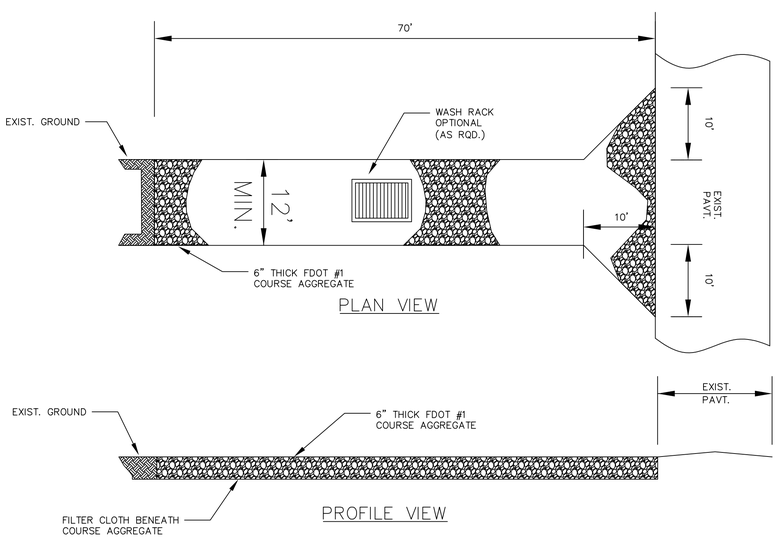

CONSTRUCTION ENTRANCE DETAIL

SCALE: NTS

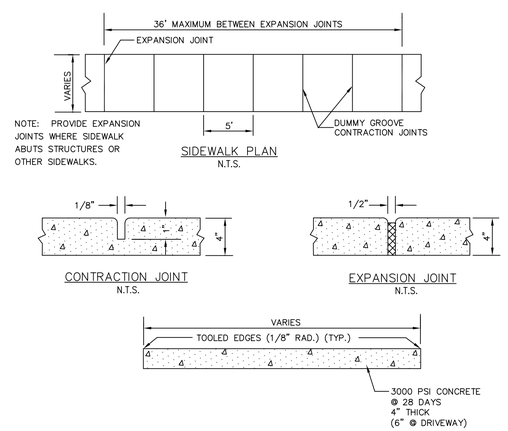

NOTE: PROVIDE EXPANSION JOINTS WHERE SIDEWALK ABUTS STRUCTURES OR OTHER SIDEWALKS.

SIDEWALK PLAN
N.T.S.

CONTRACTION JOINT
N.T.S.

EXPANSION JOINT
N.T.S.

TYPICAL SIDEWALK SECTION

N.T.S.

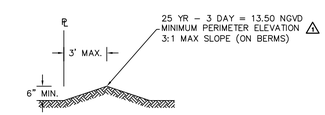

PERIMETER ELEVATION DETAIL "PE"

N.T.S.

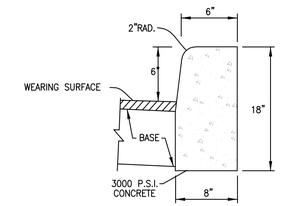

NOTE: SAWCUTS REQUIRED AT 10' CENTERS

TYPE "D" CURB

N.T.S.

ALL ELEVATIONS INDICATED HEREON ARE NGVD 29
VERTICAL DATUM BASED ON SURVEY PROVIDED BY:
JENNIFER MALIN, PSM #6667
ENGENUITY GROUP, INC. LB #6603
1280 N. CONGRESS AVE., STE. 101
WEST PALM BEACH, FL 33409 TEL:(561) 655-1151

NGVD TO NAVD CONVERSION = NGVD - 1.520 FT

CALL BEFORE YOU DIG
Sunshine State One Call 811 OF FLORIDA, INC.
811 or (800) 432-4770

PAVING, GRADING, & DRAINAGE DETAILS
FOR
OXYGEN DEVELOPMENT
PALM SPRINGS, FLORIDA

REVISIONS	DATE	BY	CK
1. REVISED PER UPDATED SITE PLAN	07/15/22	SMG	SMG
2. REVISED PER UPDATED SITE PLAN	09/09/22	SMG	SMG

EB 9889
LDi
Last Devenport, Inc.
1860 Old Okeechobee Road, Suite 504
West Palm Beach, FL 33409
phone (561)615-6567 fax (561)683-0872

SCALE: N/A
DATE: 10/26/22
DESIGNED BY:SG
CHECKED BY:SG
DRAWING FILE: 22-006-C.8

10/26/2022
SCOTT M. GINTERT, P.E.
FLORIDA P.E. #84228

22-006 | C.11

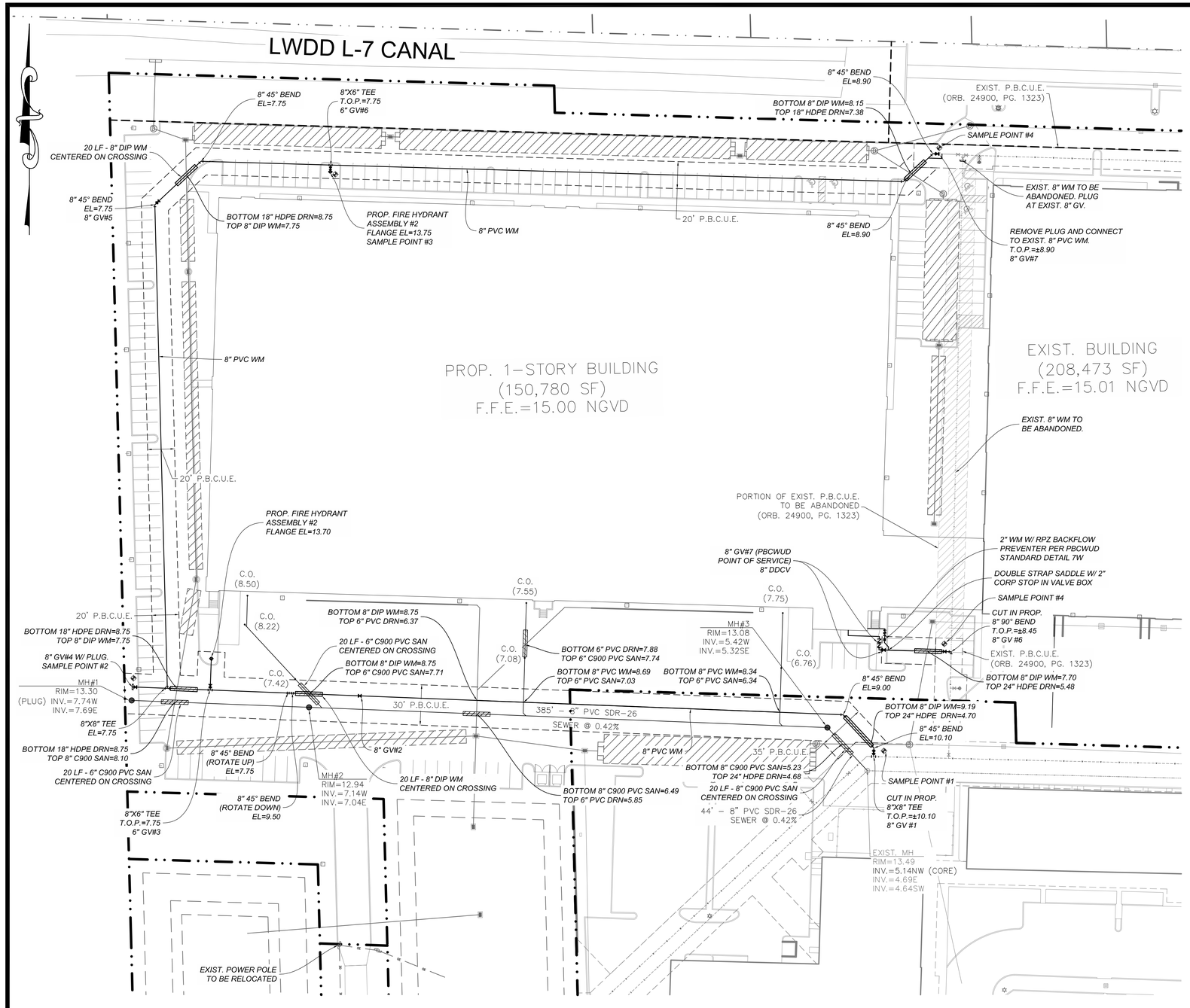

LEGEND

- PROP. STORM DRAINAGE STRUCTURE
- EXIST. STORM DRAINAGE STRUCTURE
- EXIST. WATER MAIN
- PROP. WATER MAIN W/ GATE VALVE
- PROP. SAN. SEWER MAIN WITH SANITARY MANHOLE
- EXIST. SAN. SEWER MAIN WITH SANITARY MANHOLE
- PROP. EXFILTRATION TRENCH

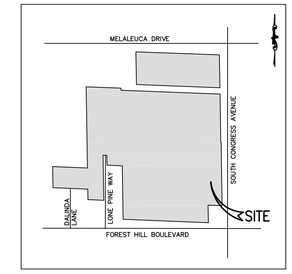

SEC. 24 TWP. 44 S. RGE. 42 E.

GRAPHIC SCALE

40 0 20 40 80 160

(IN FEET)
1 inch = 40 ft.

UTILITY CONSTRUCTION NOTES

GENERAL NOTES:

1. PRIOR TO CONSTRUCTION IT IS THE RESPONSIBILITY OF THE CONTRACTOR TO FIELD VERIFY (ELEVATION & LOCATION) ALL EXISTING UTILITIES. ANY DISCREPANCIES SHALL BE BROUGHT TO THE ATTENTION OF THE ENGINEER PRIOR TO CONTINUATION OF WORK.
2. ALL WATER MAINS (BLUE), FORCE MAINS (GREEN) AND RECLAIMED WATER MAINS (PURPLE) SHALL BE P.V.C. (C-900) UNLESS A DIFFERENT MATERIAL IS OTHERWISE NOTED.
3. FIRE HYDRANTS SHALL BE CONNECTED USING DUCTILE IRON PIPE.
4. VALVES SHALL NOT BE PLACED IN CURBS.
5. ALL WATER AND SANITARY SERVICES SHALL BE CONSTRUCTED A MINIMUM OF 5' FROM DRAINAGE STRUCTURES.
6. PRESSURE TESTING AND CERTIFICATION SHALL FOLLOW THE PALM BEACH COUNTY WATER UTILITIES DEPARTMENT MINIMUM ENGINEERING AND CONSTRUCTION STANDARDS (LATEST EDITION).
7. ALL WATER MAINS TO CROSS OVER SANITARY SEWER SERVICES, WHERE 12" MINIMUM CLEARANCE CANNOT BE MAINTAINED, 20 LINEAR FEET OF DUCTILE IRON WATER MAIN SHALL BE CENTERED ON THE CROSSING. THE SEWER SERVICE SHALL BE C-900, SDR-18 IF THE SEWER SERVICE IS ABOVE THE WATER MAIN WITH LESS THAN 12" MINIMUM SEPARATION. IN NO CASE SHALL THERE BE LESS THAN 6" CLEARANCE.
8. RECORD DRAWINGS SHALL INCLUDE ALL UTILITY OBJECTS AND ASSOCIATED LOCATIONS IDENTIFIED AS REQUIRED BY PALM BEACH COUNTY WATER UTILITIES DEPARTMENT AND SHOWN IN THE AS-BUILT LOCATION.
9. ALL RECORD DRAWINGS SHALL BE DRAWN IN THE STATE PLANE COORDINATE SYSTEM. STATE PLANE COORDINATES ARE REQUIRED FOR ALL AS-BUILT UTILITY OBJECTS AS REQUIRED BY PALM BEACH COUNTY WATER UTILITIES DEPARTMENT. ALL UTILITY FEATURES SHALL BE SHOWN IN THEIR AS-BUILT LOCATION.
10. ELEVATIONS – ALL ELEVATIONS REFER TO NORTH AMERICAN VERTICAL DATUM OF 1988.
11. COMPREHENSIVE WATER AND SEWER UTILITY RECORD DRAWINGS FOR THE ENTIRE SITE, INCLUDING UTILITY EASEMENT LOCATIONS, ARE REQUIRED PRIOR TO WATER METER RELEASE.
12. FIRE SPRINKLER RISERS SHALL BE LOCATED ON EXTERIOR OF BUILDINGS.
13. FIRE LINE REQUIRES INSPECTION BY PALM BEACH COUNTY FIRE MARSHAL PRIOR TO BACKFILL & COMPACTION.

RECORD DRAWING NOTES:

1. RECORD DRAWINGS SHALL BE PREPARED IN THE STATE PLANE COORDINATE SYSTEM.
2. ALL UTILITY FEATURES SHALL BE SHOWN IN THEIR AS-BUILT LOCATION.
3. STATE PLANE COORDINATES SHALL BE DISPLAYED ON RECORD DRAWINGS FOR ALL FEATURES SPECIFIED IN PBCWUD STANDARDS.
4. STATE PLANE COORDINATES SHALL BE SHOWN ON PROPERTY CORNERS AS REQUIRED BY PBCWUD.

WUD FACILITIES & FPL ELECTRICAL CONDUIT NOTE:

1. A MINIMUM 1.5' (18") SEPARATION IS REQUIRED BETWEEN ANY ELECTRICAL CONDUIT INSTALLED FOR THE FPL FEEDERS BETWEEN THE FPL TRANSFORMERS AND ANY WUD WATER AND WASTEWATER MAINS. THOSES ELECTRICAL CONDUITS SHALL BE SHOWN ON THE WUD WATER & WASTEWATER AS-BUILT DRAWINGS WHERE THEY CROSS THE WUD MAINS WITH AS-BUILT DATA THAT SHALL INCLUDE SEPARATION AND COORDINATES LOCATING THE CROSSING.

HYDRANT SECURITY EQUIPMENT:

1. THE EXISTING FIRE HYDRANT CAN BE RELOCATED PROVIDED IT IS IN ACCEPTABLE WORKING ORDER BASED ON THE PROJECT'S WUD INSPECTOR'S INSPECTION. IF NOT IN PROPER WORKING CONDITION A NEW FIRE HYDRANT WILL BE REQUIRED. IN EITHER CASE CAPTIVATOR CAPS ARE REQUIRED PER NOTE 2 BELOW.
2. FIRE HYDRANT SHALL BE EQUIPPED WITH A SET OF AFC "CAPTIVATER" SECURITY CAPS. THE CAPS SHALL BE CHAINED TO THE HYDRANT BODY AND INSTALLED PRIOR TO ISSUANCE OF "CONSTRUCTION WATER RELEASE" CERTIFICATION. A SCHEDULED INSPECTION BY PBCWUD IS REQUIRED TO VERIFY THE INSTALLATION AND OPERATION OF THE CAPS.
3. PLEASE NOTE THAT THE SECURITY CAPS CAN ONLY BE REMOVED USING SPECIAL WRENCHES. THE CONTRACTOR SHALL CONTACT THE PBCWUD INSPECTOR FOR ASSISTANCE IF ACCESS TO THE HYDRANT IS REQUIRED FOR FLUSHING OR TESTING PURPOSES.
4. ALL NEW FIRE HYDRANTS ARE TO BE INSTALLED SO THE PUMPER NOZZLE IS 5.0' MIN WITH RAISED CURB OR 6.0' MIN WITHOUT RAISED CURB AND 12.0' MAX FROM THE EDGE OF PAVEMENT.

GENERAL LANDSCAPE NOTE:

1. IF ANY NEW LANDSCAPE MATERIALS ARE INSTALLED AS PART OF THIS PROJECT THEN SOD ONLY WITH NO SHRUBS AND/OR TREES ARE TO BE INSTALLED WITHIN 5' OF ANY WATER METER AND WITHIN 7.5' OF ANY FIRE HYDRANT. TREES CANNOT BE INSTALLED WITHIN 10' OF A WUD WATER OR FORCE MAIN WITHOUT PRIOR PBCWUD APPROVAL AND THE INSTALLATION OF A ROOT BARRIER. ALSO IF ANY EXISTING TREES ARE LESS THAN 10' MINIMUM OF ANY NEW WATER OR FORCE MAIN A ROOT BARRIER IS REQUIRED TO BE INSTALLED OR TREE RELOCATED/REMOVED.

ALL ELEVATIONS INDICATED HEREON ARE NGVD 29
VERTICAL DATUM BASED ON SURVEY PROVIDED BY:
JENNIFER MALIN, PSM #6667
ENGENUITY GROUP, INC. LB #6603
1280 N. CONGRESS AVE., STE. 101
WEST PALM BEACH, FL 33409 TEL:(561) 655-1151

NGVD TO NAVD CONVERSION = NGVD - 1.520 FT

P.B.C.U.E. RECORDED IN:
P.B. _____, PGS. _____

GENERAL WATER NOTES:

1. ALL WATER MAIN DUCTILE IRON PIPE AND PIPE FITTINGS SHALL BE PAINTED WITH A 4" WIDE CONTINUOUS BLUE LINE THAT RUNS PARALLEL TO THE AXIS OF THE PIPE AND IS LOCATED ALONG THE TOP OF THE PIPE.
2. ALL WATER MAINS SHALL BE MARKED WITH ONE CONTINUOUS STRIP OF 6" WIDE MAGNETIC BLUE CODED TAPE IMPRINTED WITH ONE AND ONE HALF (1-1/2) INCH HIGH LETTERING READING "CAUTION – WATER LINE BURIED BELOW" AND LOCATED APPROXIMATELY TWELVE (12) INCHES ABOVE THE CROWN OF THE PIPE. THE WORDING SHALL OCCUR EVERY THREE (3) FEET.
3. ALL WATER SERVICE BRASS FITTINGS ARE REQUIRED TO BE LEAD FREE.
4. ALL EXISTING PBCWUD FACILITIES (IE. VALVES) TO BE OPERATED BY PBCWUD PERSONNEL ONLY.

GENERAL SEWER NOTES:

1. ON-SITE SEWER LATERALS ARE PRIVATELY OWNED AND MAINTAINED.
2. SEWER CLEANOUT MINI-MANHOLES ARE REQUIRED ON ALL CLEANOUTS WITHIN PAVEMENT AREAS.

WUD# 22-_ _ _

CALL BEFORE YOU DIG
Sunshine State One Call 811
OF FLORIDA, INC.
811 or (800) 432-4770

WATER & SEWER PLAN
FOR
OXYGEN DEVELOPMENT
PALM SPRINGS, FLORIDA

REVISIONS	DATE	BY	CK
1. REVISED PER UPDATED SITE PLAN	07/15/22	SMG	SMG
2. REVISED PER UPDATED SITE PLAN	09/09/22	SMG	SMG
3. REVISED PER PBCWUD COMMENTS	09/21/22	SMG	SMG

EB 9889
LDi Last Devenport, Inc.
1860 Old Okeechobee Road, Suite 504
West Palm Beach, FL 33409
phone (561)615-6567 fax (561)683-0872

SCALE: 1"=40'
DATE: 10/26/22
DESIGNED BY:SG
CHECKED BY:SG
DRAWING FILE: 22-006-C.12

10/26/2022
SCOTT M. GINTERT, P.E.
FLORIDA P.E. #84228

22-006 | C.12

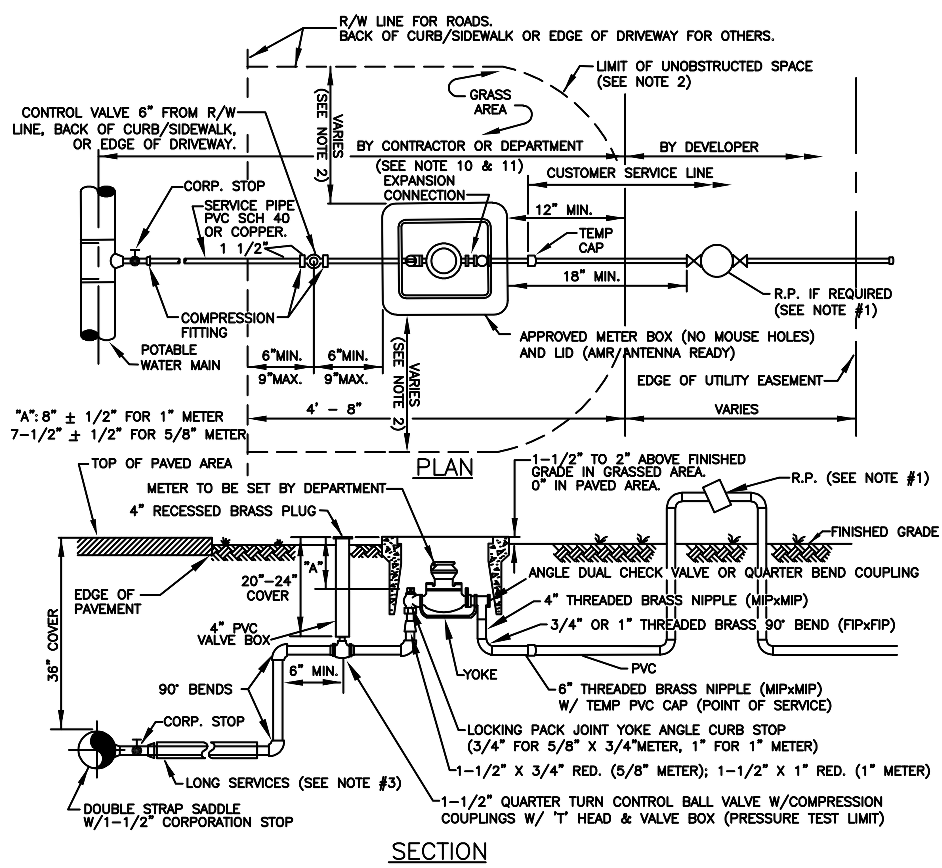

NOTES:

1. ALL NON-RESIDENTIAL SERVICES AND RESIDENTIAL SERVICES WITH SEPARATE METERED RECLAIMED WATER SERVICE SHALL HAVE AN APPROVED REDUCED PRESSURE PRINCIPLE BACKFLOW PREVENTION ASSEMBLY (R.P.). THE INITIAL TEST OF THE R.P. SHALL BE PERFORMED BY THE DEPARTMENT. THE R.P. SHALL BE INSTALLED AS CLOSE AS POSSIBLE TO THE POINT OF SERVICE NOT TO EXCEED 48" WITHOUT PRIOR DEPARTMENT APPROVAL.
2. LIMIT OF UNOBSTRUCTED SPACE FROM SIDE OF WATER METER BOX SHALL BE 36" MINIMUM FOR SHRUBS AND SIMILAR OBSTRUCTIONS WITH 60" MINIMUM FOR TREES, WALLS, AND OTHER SIMILAR OBSTRUCTIONS.
3. FOR INSTALLATION OF SERVICES UNDER DRIVEWAYS AND ROADWAYS USE MIN. 3" DIAMETER BLACK IRON, PVC SCH 40 OR HDPE SDR 9 CASING. CASING SHALL EXTEND MIN. 24" BEYOND EDGE OF PAVEMENT. END OF CASING TO BE SEALED WITH FOAM SEALANT. CASING SHALL BE COLOR-CODED BLACK, WHITE, BLUE, OR BLUE STRIPED.
4. SUCCESSIVE TAPS INTO THE WATER MAIN SHALL BE SPACED A MINIMUM OF 18" APART. TAPS ON SAME SIDE OF A PVC PIPE SECTION SHALL BE MIN. 10' APART
5. METER SHALL NOT BE PLACED IN SIDEWALK OR DRIVEWAY AREAS. WATER SERVICE LINES AND TAPS SHALL NOT BE PLACED UNDER DRIVEWAYS WHENEVER POSSIBLE AND IF REQUIRED, ONLY WITH PRIOR DEPARTMENT APPROVAL.
6. COPPER SHALL BE "TYPE K" CONTINUOUS AND SUITABLE FOR UNDERGROUND SERVICE WITH FLARED CONNECTIONS. PVC PIPE SHALL BE SCH. 40. WITH SCH 80 PVC FITTINGS. ALL BRASS SHALL BE "LEAD FREE".
7. MAXIMUM SERVICE LENGTH IS 100' TO METER.
8. BEDDING (MIN. 4") AND COVER (MIN. 4") OVER SERVICE LINE OR CASING SHALL CONSIST OF FINE GRANULAR MATERIAL. UNSUITABLE IN-SITU MATERIALS SUCH AS MUCK, DEBRIS AND LARGER ROCKS SHALL BE REMOVED WITH 2" MAXIMUM SIZE.
9. METER/SERVICE WILL NOT BE INSTALLED/ACTIVATED UNTIL:
   A. ALL FORM BOARDS FOR DRIVEWAY AND/OR SIDEWALK MUST BE COMPLETELY INSTALLED OR THE DRIVEWAY AND/OR SIDEWALK MUST HAVE BEEN INSTALLED.
   B. "MINIMUM UNOBSTRUCTED SPACE" AS SHOWN IN NOTE 2 AND ON THE PLAN VIEW IS PROVIDED WITH 12" MINIMUM VERTICAL SEPARATION REQUIRED TO ALL OTHER UTILITIES.
   C. THE REQUIRED BACKFLOW PREVENTION ASSEMBLY/DEVICE IS INSTALLED AND HAS PASSED INITIAL TEST.
10. METER TO BE INSTALLED BY DEPARTMENT. THE PIPING BEYOND THE CONTROL VALVE SHALL BE INSTALLED BY THE DEVELOPER OR THE DEPARTMENT DEPENDING ON TYPE OF SERVICE INSTALLATION REQUIRED.
11. THE DEVELOPER/PROPERTY OWNER OR ASSIGNEE SHALL BE RESPONSIBLE FOR INSTALLATION OF SERVICES BEYOND PRESSURE TEST LIMITS AS SPECIFIED BY THE DEPARTMENT.
12. THREADED AREAS OF CORPORATION STOP AND OTHER FITTINGS SHALL BE SPIRAL WRAPPED WITH TWO (2) WRAPS OF TEFLON TAPE.
13. METER BOXES IN NON-GRASS AREAS SHALL HAVE TRAFFIC RATED LIDS.
14. A 12" THICK COMPACTED 3/4" ROCK BASE IS REQUIRED FOR METER BOXES OUTSIDE OF GRASS AREA. THE BASE SHALL EXTEND MINIMUM 12" BEYOND THE METER BOX PERIMETER.

POTABLE WATER SERVICE SINGLE 5/8" X 3/4" & 1" METER INSTALLATION DETAIL (PVC) ✳ 1W

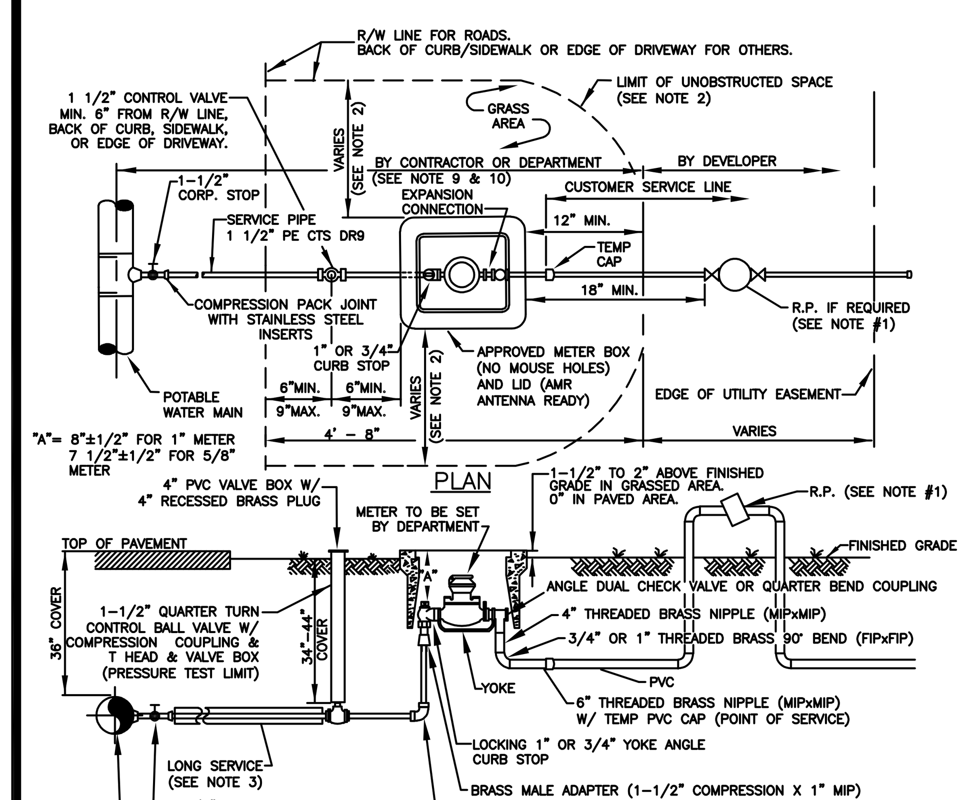

NOTES:

1. ALL NON-RESIDENTIAL SERVICES AND RESIDENTIAL SERVICES WITH SEPARATE METERED RECLAIMED WATER SERVICE SHALL HAVE AN APPROVED REDUCED PRESSURE PRINCIPLE BACKFLOW PREVENTION ASSEMBLY (R.P.). THE INITIAL TEST OF THE R.P. SHALL BE PERFORMED BY THE DEPARTMENT. THE R.P. SHALL BE INSTALLED AS CLOSE AS POSSIBLE TO THE POINT OF SERVICE NOT TO EXCEED 48" WITHOUT PRIOR DEPARTMENT APPROVAL.
2. LIMIT OF UNOBSTRUCTED SPACE FROM SIDE OF WATER METER BOX SHALL BE 36" MINIMUM FOR SHRUBS AND SIMILAR OBSTRUCTIONS WITH 60" MINIMUM FOR TREES, WALLS, AND OTHER SIMILAR OBSTRUCTIONS.
3. FOR INSTALLATION OF SERVICES UNDER DRIVEWAYS AND ROADWAYS USE MIN. 3" DIAMETER BLACK IRON, PVC SCH 40 OR HDPE SDR 9 CASING. CASING SHALL EXTEND MIN. 24" BEYOND EDGE OF PAVEMENT. END OF CASING TO BE SEALED WITH FOAM SEALANT. CASING SHALL BE COLOR-CODED BLACK, WHITE, BLUE, OR BLUE STRIPED.
4. SUCCESSIVE TAPS INTO THE WATER MAIN SHALL BE SPACED A MINIMUM OF 18" APART. TAPS ON SAME SIDE OF A PVC PIPE SECTION SHALL BE MIN. 10' APART
5. METER SHALL NOT BE PLACED IN SIDEWALK OR DRIVEWAY AREAS. WATER SERVICE LINES AND TAPS SHALL NOT BE PLACED UNDER DRIVEWAYS WHENEVER POSSIBLE AND IF REQUIRED, ONLY WITH PRIOR DEPARTMENT APPROVAL.
6. MAXIMUM SERVICE LENGTH IS 100' TO METER.
7. BEDDING (MIN. 4") AND COVER (MIN. 4") OVER SERVICE LINE OR CASING SHALL CONSIST OF FINE GRANULAR MATERIAL. UNSUITABLE IN-SITU MATERIALS SUCH AS MUCK, DEBRIS AND LARGER ROCKS SHALL BE REMOVED WITH 2" MAXIMUM SIZE.
8. METER/SERVICE WILL NOT BE INSTALLED/ACTIVATED UNTIL:
   A. ALL FORM BOARDS FOR DRIVEWAY AND/OR SIDEWALK MUST BE COMPLETELY INSTALLED OR THE DRIVEWAY AND/OR SIDEWALK MUST HAVE BEEN INSTALLED.
   B. "MINIMUM UNOBSTRUCTED SPACE" AS SHOWN IN NOTE 2 AND ON THE PLAN VIEW IS PROVIDED WITH 12" MINIMUM VERTICAL SEPARATION REQUIRED TO ALL OTHER UTILITIES.
   C. THE REQUIRED BACKFLOW PREVENTION ASSEMBLY/DEVICE IS INSTALLED AND HAS PASSED INITIAL TEST.
9. METER TO BE INSTALLED BY DEPARTMENT. THE PIPING BEYOND THE CONTROL VALVE TO BE INSTALLED BY THE DEVELOPER OR THE DEPARTMENT DEPENDING ON THE TYPE OF SERVICE INSTALLATION REQUIRED.
10. THE DEVELOPER/PROPERTY OWNER OR ASSIGNEE SHALL BE RESPONSIBLE FOR INSTALLATION OF SERVICES BEYOND PRESSURE TEST LIMITS AS SPECIFIED BY THE DEPARTMENT.
11. THREADED AREAS OF CORPORATION STOP AND OTHER FITTINGS SHALL BE SPIRAL WRAPPED WITH TWO (2) WRAPS OF TEFLON TAPE.
12. METER BOXES IN NON-GRASS AREAS SHALL HAVE TRAFFIC RATED LIDS.
13. A 12" THICK COMPACTED 3/4" ROCK BASE IS REQUIRED FOR METER BOXES OUTSIDE OF GRASS AREA. THE BASE SHALL EXTEND MIN. 12" BEYOND THE METER BOX PERIMETER.
14. STAINLESS STEEL INSERTS ARE REQUIRED FOR ALL COMPRESSION FITTINGS.
15. PVC SHALL BE SCHEDULE 40 PIPE WITH SCHEDULE 80 FITTINGS. ALL BRASS FITTINGS SHALL BE "LEAD FREE".

POTABLE WATER SERVICE SINGLE 5/8" X 3/4" & 1" METER INSTALLATION DETAIL (POLYETHYLENE) ✳ 2W

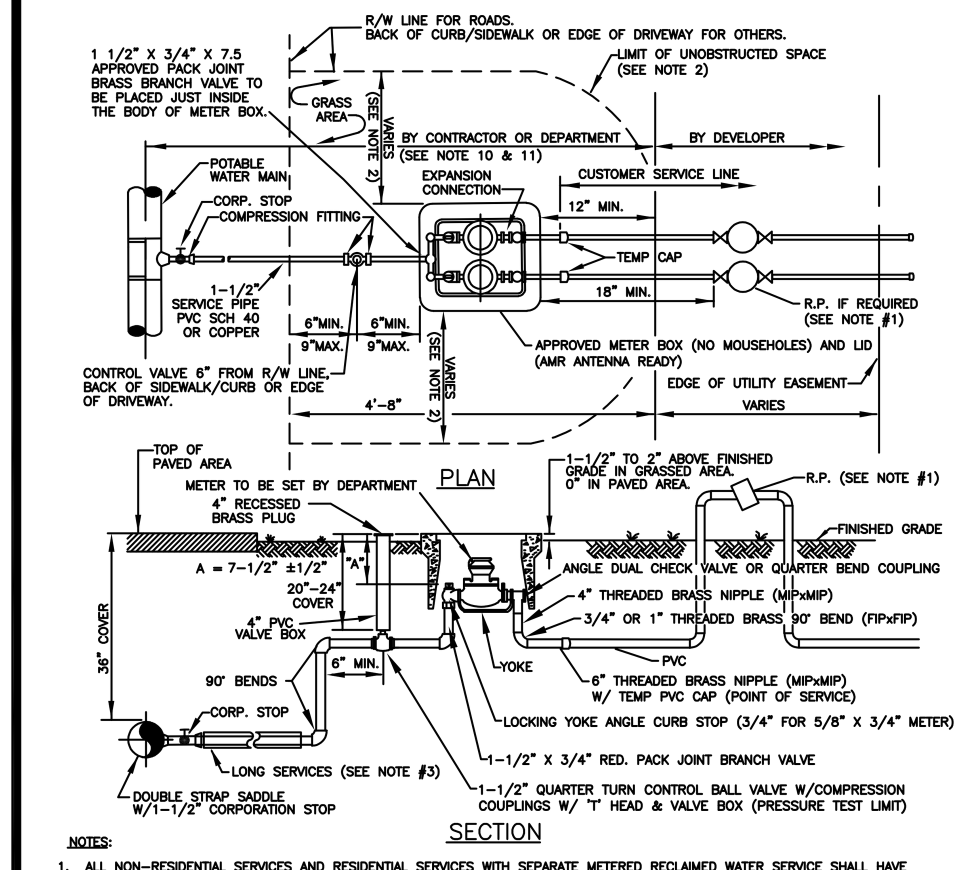

NOTES:

1. ALL NON-RESIDENTIAL SERVICES AND RESIDENTIAL SERVICES WITH SEPARATE METERED RECLAIMED WATER SERVICE SHALL HAVE AN APPROVED REDUCED PRESSURE PRINCIPLE BACKFLOW PREVENTION ASSEMBLY (R.P.). THE INITIAL TEST OF THE R.P. SHALL BE PERFORMED BY THE DEPARTMENT. THE R.P. SHALL BE INSTALLED AS CLOSE AS POSSIBLE TO THE POINT OF SERVICE NOT TO EXCEED 48" WITHOUT PRIOR DEPARTMENT APPROVAL.
2. LIMIT OF UNOBSTRUCTED SPACE FROM SIDE OF WATER METER BOX SHALL BE 36" MINIMUM FOR SHRUBS AND SIMILAR OBSTRUCTIONS WITH 60" MINIMUM FOR TREES, WALLS, AND OTHER SIMILAR OBSTRUCTIONS.
3. FOR INSTALLATION OF SERVICES UNDER DRIVEWAYS AND ROADWAYS USE MIN. 3" DIAMETER BLACK IRON, PVC SCH 40 OR HDPE SDR 9 CASING. CASING SHALL EXTEND MIN. 24" BEYOND EDGE OF PAVEMENT. END OF CASING TO BE SEALED WITH FOAM SEALANT. CASING SHALL BE COLOR-CODED BLACK, WHITE, BLUE, OR BLUE STRIPED.
4. SUCCESSIVE TAPS INTO THE WATER MAIN SHALL BE SPACED A MINIMUM OF 18" APART. TAPS ON SAME SIDE OF A PVC PIPE SECTION SHALL BE MIN. 10' APART
5. METER SHALL NOT BE PLACED IN SIDEWALK OR DRIVEWAY AREAS. WATER SERVICE LINES AND TAPS SHALL NOT BE PLACED UNDER DRIVEWAYS WHENEVER POSSIBLE AND IF REQUIRED, ONLY WITH PRIOR DEPARTMENT APPROVAL.
6. COPPER SHALL BE "TYPE K" CONTINUOUS AND SUITABLE FOR UNDERGROUND SERVICE WITH FLARED CONNECTIONS. PVC PIPE SHALL BE SCH. 40. WITH SCH 80 PVC FITTINGS. ALL BRASS SHALL BE "LEAD FREE".
7. MAXIMUM SERVICE LENGTH IS 100' TO METER.
8. BEDDING (MIN. 4") AND COVER (MIN. 4") OVER SERVICE LINE OR CASING SHALL CONSIST OF FINE GRANULAR MATERIAL. UNSUITABLE IN-SITU MATERIALS SUCH AS MUCK, DEBRIS AND LARGER ROCKS SHALL BE REMOVED WITH 2" MAXIMUM SIZE.
9. METER/SERVICE WILL NOT BE INSTALLED/ACTIVATED UNTIL:
   A. ALL FORM BOARDS FOR DRIVEWAY AND/OR SIDEWALK MUST BE COMPLETELY INSTALLED OR THE DRIVEWAY AND/OR SIDEWALK MUST HAVE BEEN INSTALLED.
   B. "MINIMUM UNOBSTRUCTED SPACE" AS SHOWN IN NOTE 2 AND ON THE PLAN VIEW IS PROVIDED WITH 12" MINIMUM VERTICAL SEPARATION REQUIRED TO ALL OTHER UTILITIES.
   C. THE REQUIRED BACKFLOW PREVENTION ASSEMBLY/DEVICE IS INSTALLED AND HAS PASSED INITIAL TEST.
10. METER TO BE INSTALLED BY DEPARTMENT. THE PIPING BEYOND THE CONTROL VALVE SHALL BE INSTALLED BY THE DEVELOPER OR THE DEPARTMENT DEPENDING ON TYPE OF SERVICE INSTALLATION REQUIRED.
11. THE DEVELOPER/PROPERTY OWNER OR ASSIGNEE SHALL BE RESPONSIBLE FOR INSTALLATION OF SERVICES BEYOND PRESSURE TEST LIMITS AS SPECIFIED BY THE DEPARTMENT.
12. THREADED AREAS OF CORPORATION STOP AND OTHER FITTINGS SHALL BE SPIRAL WRAPPED WITH TWO (2) WRAPS OF TEFLON TAPE.
13. METER BOXES IN NON-GRASS AREAS SHALL HAVE TRAFFIC RATED LIDS.
14. A 12" THICK COMPACTED 3/4" ROCK BASE IS REQUIRED FOR METER BOXES OUTSIDE OF GRASS AREA. THE BASE SHALL EXTEND MINIMUM 12" BEYOND THE METER BOX PERIMETER.

POTABLE WATER SERVICE DUAL 5/8" X 3/4" METER INSTALLATION DETAIL (PVC) ✳ 3W

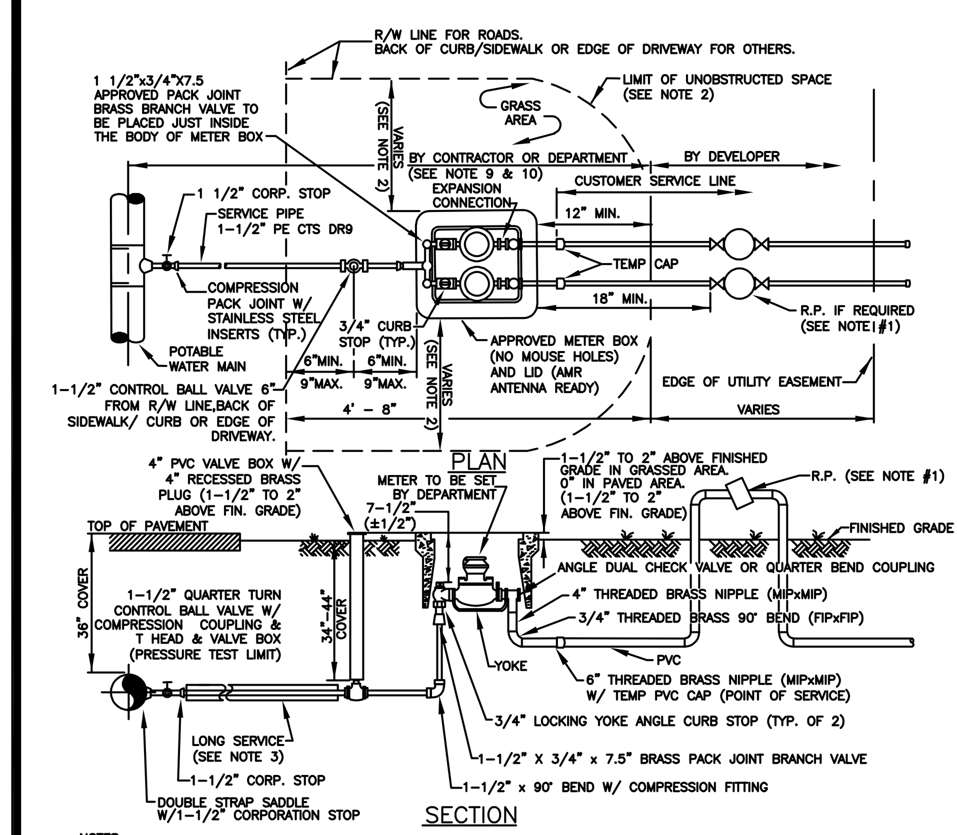

NOTES:

1. ALL NON-RESIDENTIAL SERVICES AND RESIDENTIAL SERVICES WITH SEPARATE METERED RECLAIMED WATER SERVICE SHALL HAVE AN APPROVED REDUCED PRESSURE PRINCIPLE BACKFLOW PREVENTION ASSEMBLY (R.P.). THE INITIAL TEST OF THE R.P. SHALL BE PERFORMED BY THE DEPARTMENT. THE R.P. SHALL BE INSTALLED AS CLOSE AS POSSIBLE TO THE POINT OF SERVICE NOT TO EXCEED 48" WITHOUT PRIOR DEPARTMENT APPROVAL.
2. LIMIT OF UNOBSTRUCTED SPACE FROM SIDE OF WATER METER BOX SHALL BE 36" MINIMUM FOR SHRUBS AND SIMILAR OBSTRUCTIONS WITH 60" MINIMUM FOR TREES, WALLS, AND OTHER SIMILAR OBSTRUCTIONS.
3. FOR INSTALLATION OF SERVICES UNDER DRIVEWAYS AND ROADWAYS USE MIN. 3" DIAMETER BLACK IRON, PVC SCH 40 OR HDPE SDR 9 CASING. CASING SHALL EXTEND MIN. 24" BEYOND EDGE OF PAVEMENT. END OF CASING TO BE SEALED WITH FOAM SEALANT. CASING SHALL BE COLOR-CODED BLACK, WHITE, BLUE, OR BLUE STRIPED.
4. SUCCESSIVE TAPS INTO THE WATER MAIN SHALL BE SPACED A MINIMUM OF 18" APART. TAPS ON SAME SIDE OF A PVC PIPE SECTION SHALL BE MIN. 10' APART
5. METER SHALL NOT BE PLACED IN SIDEWALK OR DRIVEWAY AREAS. WATER SERVICE LINES AND TAPS SHALL NOT BE PLACED UNDER DRIVEWAYS WHENEVER POSSIBLE AND IF REQUIRED, ONLY WITH PRIOR DEPARTMENT APPROVAL.
6. MAXIMUM SERVICE LENGTH IS 100' TO METER.
7. BEDDING (MIN. 4") AND COVER (MIN. 4") OVER SERVICE LINE OR CASING SHALL CONSIST OF FINE GRANULAR MATERIAL. UNSUITABLE IN-SITU MATERIALS SUCH AS MUCK, DEBRIS AND LARGER ROCKS SHALL BE REMOVED WITH 2" MAXIMUM SIZE.
8. METER/SERVICE WILL NOT BE INSTALLED/ACTIVATED UNTIL:
   A. ALL FORM BOARDS FOR DRIVEWAY AND/OR SIDEWALK MUST BE COMPLETELY INSTALLED OR THE DRIVEWAY AND/OR SIDEWALK MUST HAVE BEEN INSTALLED.
   B. "MINIMUM UNOBSTRUCTED SPACE" AS SHOWN IN NOTE 2 AND ON THE PLAN VIEW IS PROVIDED WITH 12" MINIMUM VERTICAL SEPARATION REQUIRED TO ALL OTHER UTILITIES.
   C. THE REQUIRED BACKFLOW PREVENTION ASSEMBLY/DEVICE IS INSTALLED AND HAS PASSED INITIAL TEST.
9. METER TO BE INSTALLED BY DEPARTMENT. THE PIPING BEYOND THE CONTROL VALVE TO BE INSTALLED BY THE DEVELOPER OR THE DEPARTMENT DEPENDING ON THE TYPE OF SERVICE INSTALLATION REQUIRED.
10. THE DEVELOPER/PROPERTY OWNER OR ASSIGNEE SHALL BE RESPONSIBLE FOR INSTALLATION OF SERVICES BEYOND PRESSURE TEST LIMITS AS SPECIFIED BY THE DEPARTMENT.
11. THREADED AREAS OF CORPORATION STOP AND OTHER FITTINGS SHALL BE SPIRAL WRAPPED WITH TWO (2) WRAPS OF TEFLON TAPE.
12. METER BOXES IN NON-GRASS AREAS SHALL HAVE TRAFFIC RATED LIDS.
13. A 12" THICK COMPACTED 3/4" ROCK BASE IS REQUIRED FOR METER BOXES OUTSIDE OF GRASS AREA. THE BASE SHALL EXTEND MIN. 12" BEYOND THE METER BOX PERIMETER.
14. STAINLESS STEEL INSERTS ARE REQUIRED FOR ALL COMPRESSION FITTINGS.
15. PVC SHALL BE SCHEDULE 40 PIPE WITH SCHEDULE 80 FITTINGS. ALL BRASS FITTINGS SHALL BE "LEAD FREE".

POTABLE WATER SERVICE DUAL 5/8" X 3/4" METER INSTALLATION DETAIL (POLYETHYLENE) ✳ 4W

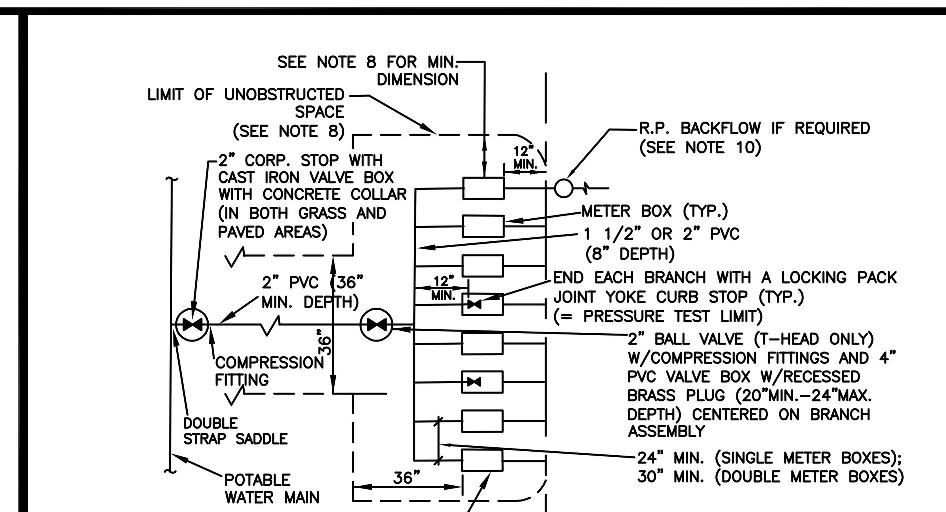

1. SERVICE PIPING LARGER THAN 2" WILL NOT BE ACCEPTED. FOR INSTALLATION OF SERVICES UNDER DRIVEWAYS AND ROADWAYS USE 4" DIAMETER BLACK IRON, PVC SCH. 40, OR HDPE SDR 9 CASING. CASING SHALL EXTEND 24" BEYOND EDGE OF PAVEMENT. END OF CASING TO BE SEALED WITH FOAM SEALANT. CASING SHALL BE COLOR CODED BLACK, WHITE, BULE, OR BLUE STRIPED.
2. METER LOCATION MUST CORRESPOND TO UNIT/BAY CONFIGURATION TO AVOID SERVICE LINE CROSSINGS.
3. METER/SERVICE WILL NOT BE INSTALLED/ACTIVATED UNTIL:
   A. ALL FORM BOARDS FOR DRIVEWAY AND/OR SIDEWALK MUST BE COMPLETELY INSTALLED OR THE DRIVEWAY AND/OR SIDEWALK MUST HAVE BEEN INSTALLED.
   B. "MINIMUM UNOBSTRUCTED SPACE" AS SHOWN IN NOTE 2 AND ON THE PLAN VIEW IS PROVIDED WITH 12" MINIMUM VERTICAL SEPARATION REQUIRED TO ALL OTHER UTILITIES.
   C. THE REQUIRED BACKFLOW PREVENTION ASSEMBLY/DEVICE IS INSTALLED AND HAS PASSED INITIAL TEST.
4. TYPICAL METER INSTALLATION DETAILS 1W AND 4W AS APPLICABLE.
5. THE DEVELOPER/PROPERTY OWNER OR ASSIGNEE SHALL BE RESPONSIBLE FOR SERVICE INSTALLATION BEYOND PRESSURE TEST LIMITS AS SPECIFIED BY THE DEPARTMENT.
6. THREADED AREAS OF CORPORATION STOP AND OTHER FITTINGS SHALL BE SPIRAL WRAPPED WITH TWO (2) WRAPS OF TEFLON TAPE.
7. MAX. (8) 5/8" METERS OR MAX. (4) 1" METERS, OR MAX. (2) 5/8" METERS WITH (2) 1" METERS MAY BE CONNECTED TO A SINGLE 2" SERVICE LINE.
8. LIMIT OF UNOBSTRUCTED SPACE FROM SIDE OF WATER METER BOX SHALL BE 36" MINIMUM FOR SHRUBS AND SIMILAR OBSTRUCTIONS WITH 60" MINIMUM FOR TREES, WALLS, AND OTHER SIMILAR OBSTRUCTIONS.
9. PVC PIPE SHALL BE SCHEDULE 40 PIPE WITH SCHEDULE 80 FITTINGS. ALL BRASS FITTINGS SHALL BE "LEAD FREE".
10. ALL NON-RESIDENTIAL SERVICES AND RESIDENTIAL SERVICES WITH SEPARATE METERED RECLAIMED WATER SERVICE SHALL HAVE AN APPROVED REDUCED PRESSURE PRINCIPLE BACKFLOW PREVENTION ASSEMBLY (R.P.). THE INITIAL TEST OF THE R.P. SHALL BE PERFORMED BY THE DEPARTMENT. THE R.P. SHALL BE INSTALLED AS CLOSE AS POSSIBLE TO THE POINT OF SERVICE NOT TO EXCEED 48" WITHOUT PRIOR DEPARTMENT APPROVAL.

POTABLE WATER TYPICAL CONNECTION FOR MULTIPLE SERVICES ✳ 5W

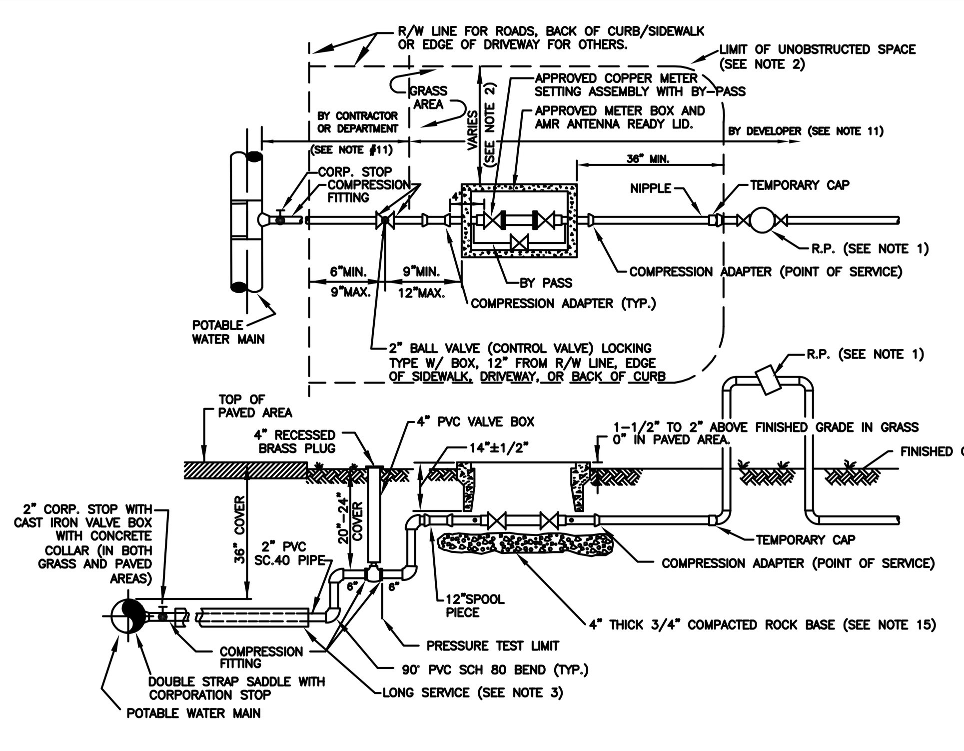

NOTES:

1. ALL NON-RESIDENTIAL SERVICES AND RESIDENTIAL SERVICES WITH SEPARATE METERED RECLAIMED WATER SERVICE SHALL HAVE AN APPROVED REDUCED PRESSURE PRINCIPLE BACKFLOW PREVENTION ASSEMBLY (R.P.). THE INITIAL TEST OF THE R.P. SHALL BE PERFORMED BY THE DEPARTMENT. THE R.P. SHALL BE INSTALLED AS CLOSE AS POSSIBLE TO THE POINT OF SERVICE NOT TO EXCEED 48" WITHOUT PRIOR DEPARTMENT APPROVAL.
2. LIMIT OF UNOBSTRUCTED SPACE FROM SIDE OF WATER METER BOX SHALL BE 36" MINIMUM FOR SHRUBS AND SIMILAR OBSTRUCTIONS WITH 60" MINIMUM FOR TREES, WALLS, AND OTHER SIMILAR OBSTRUCTIONS.
3. FOR INSTALLATION OF SERVICES UNDER DRIVEWAYS AND ROADWAYS, USE MIN. 4" DIAMETER BLACK IRON, PVC SCH 40, OR HDPE SDR 9 CASING. CASING SHALL EXTEND MIN. 24" BEYOND EDGE OF PAVEMENT. CASING TO BE SEALED WITH FOAM SEALANT. CASING SHALL BE COLOR-CODED BLACK, WHITE, BLUE, OR BLUE STRIPED.
4. SUCCESSIVE TAPS INTO THE WATER MAIN SHALL BE SPACED A MINIMUM OF 18" APART. TAPS SPACED BETWEEN 18" AND 48" SHALL BE OFFSET TO EACH SIDE OF THE MAIN. TAPS ON THE SAME SIDE OF A PVC PIPE SECTION SHALL BE MIN. 10' APART.
5. METER SHALL NOT BE PLACED IN SIDEWALK OR DRIVEWAY AREAS. WATER SERVICE LINES AND TAPS SHALL NOT BE PLACED UNDER DRIVEWAYS WHENEVER POSSIBLE AND IF REQUIRED, ONLY WITH PRIOR DEPARTMENT APPROVAL.
6. MAXIMUM SERVICE LENGTH IS 100' TO METER.
7. BEDDING (MIN. 4") AND COVER (MIN. 4") OVER SERVICE LINE OR CASING SHALL CONSIST OF FINE GRANULAR MATERIAL. UNSUITABLE IN-SITU MATERIALS SUCH AS MUCK, DEBRIS AND LARGER ROCKS SHALL BE REMOVED WITH 2" MAXIMUM SIZE.
8. METER/SERVICE WILL NOT BE INSTALLED/ACTIVATED UNTIL:
   A. ALL FORM BOARDS FOR DRIVEWAY AND/OR SIDEWALK MUST BE COMPLETELY INSTALLED OR THE DRIVEWAY AND/OR SIDEWALK MUST HAVE BEEN INSTALLED.
   B. "MINIMUM UNOBSTRUCTED SPACE" AS SHOWN IN NOTE 2 AND ON THE PLAN VIEW IS PROVIDED WITH 12" MINIMUM VERTICAL SEPARATION REQUIRED TO ALL OTHER UTILITIES.
   C. THE REQUIRED BACKFLOW PREVENTION ASSEMBLY/DEVICE IS INSTALLED AND HAS PASSED INITIAL TEST.
9. SERVICE COMPONENTS SHALL BE CONSTRUCTED FOR THE METER TO BE INSTALLED "TRUE" AND "PLUMB" AND TO ALLOW METER READING THROUGH THE METER READER LID.
10. APPROVED COPPER SETTER ASSEMBLY REQUIRED. PVC SHALL BE SCHEDULE 40 PIPE WITH SCHEDULE 80 FITTINGS. ALL BRASS FITTINGS SHALL BE "LEAD FREE".
11. METER TO BE INSTALLED BY THE DEPARTMENT. THE PIPING BEYOND THE CONTROL VALVE SHALL BE INSTALLED BY THE DEVELOPER OR THE DEPARTMENT, DEPENDING ON THE TYPE OF SERVICE INSTALLATION REQUESTED.
12. ALL HARDWARE FOR FLANGED CONNECTIONS (BOLTS, ETC.) TO BE STAINLESS STEEL.
13. THREADED AREAS OF CORPORATION STOP AND OTHER FITTINGS SHALL BE SPIRAL WRAPPED WITH TWO (2) WRAPS OF TEFLON TAPE. ALL BRASS FITTINGS SHALL BE "LEAD FREE".
14. METER BOXES IN NON-GRASS AREAS SHALL HAVE TRAFFIC RATED LIDS.
15. A 4" THICK COMPACTED 3/4" ROCK BASE IS REQUIRED. THE BASE SHALL EXTEND MINIMUM 12" BEYOND THE METER BOX PERIMETER.

POTABLE WATER 1 1/2" METER INSTALLATION ✳ 6W

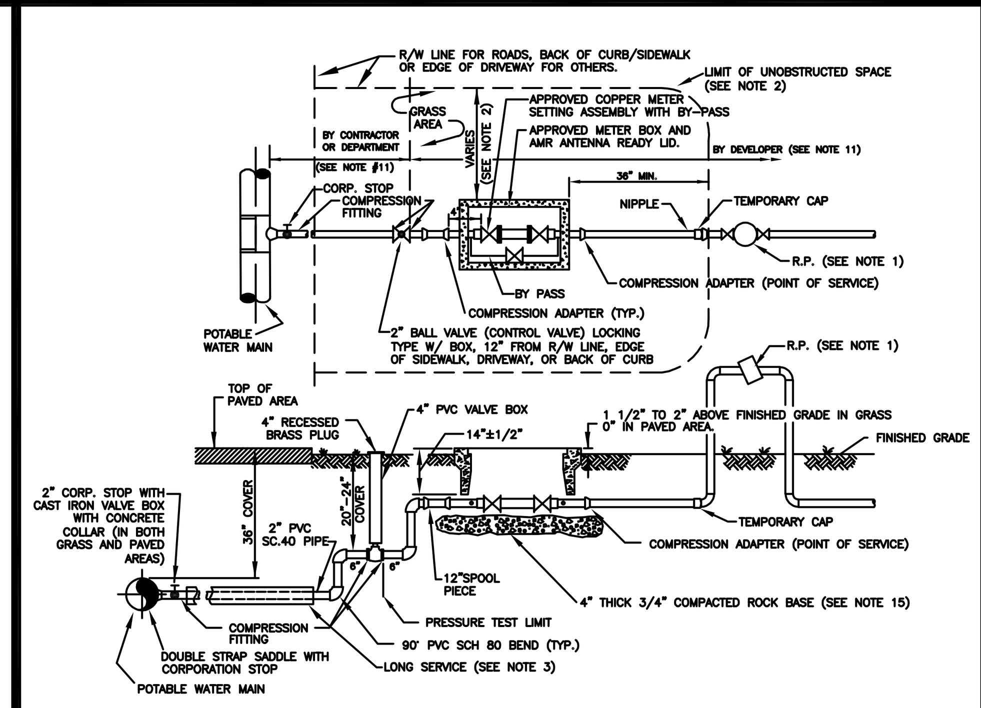

NOTES:

1. ALL NON-RESIDENTIAL SERVICES AND RESIDENTIAL SERVICES WITH SEPARATE METERED RECLAIMED WATER SERVICE SHALL HAVE AN APPROVED REDUCED PRESSURE PRINCIPLE BACKFLOW PREVENTION ASSEMBLY (R.P.). THE INITIAL TEST OF THE R.P. SHALL BE PERFORMED BY THE DEPARTMENT. THE R.P. SHALL BE INSTALLED AS CLOSE AS POSSIBLE TO THE POINT OF SERVICE NOT TO EXCEED 48" WITHOUT PRIOR DEPARTMENT APPROVAL.
2. LIMIT OF UNOBSTRUCTED SPACE FROM SIDE OF WATER METER BOX SHALL BE 36" MINIMUM FOR SHRUBS AND SIMILAR OBSTRUCTIONS WITH 60" MINIMUM FOR TREES, WALLS, AND OTHER SIMILAR OBSTRUCTIONS.
3. FOR INSTALLATION OF SERVICES UNDER DRIVEWAYS AND ROADWAYS, USE MIN. 4" DIAMETER BLACK IRON, PVC SCH 40, OR HDPE SDR 9 CASING. CASING SHALL EXTEND MIN. 24" BEYOND EDGE OF PAVEMENT. CASING TO BE SEALED WITH FOAM SEALANT. CASING SHALL BE COLOR-CODED BLACK, WHITE, BLUE, OR BLUE STRIPED.
4. SUCCESSIVE TAPS INTO THE WATER MAIN SHALL BE SPACED A MINIMUM OF 18" APART. TAPS SPACED BETWEEN 18" AND 48" SHALL BE OFFSET TO EACH SIDE OF THE MAIN. TAPS ON THE SAME SIDE OF A PVC PIPE SECTION SHALL BE MIN. 10' APART.
5. METER SHALL NOT BE PLACED IN SIDEWALK OR DRIVEWAY AREAS. WATER SERVICE LINES AND TAPS SHALL NOT BE PLACED UNDER DRIVEWAYS WHENEVER POSSIBLE AND IF REQUIRED, ONLY WITH PRIOR DEPARTMENT APPROVAL.
6. MAXIMUM SERVICE LENGTH IS 100' TO METER.
7. BEDDING (MIN. 4") AND COVER (MIN. 4") OVER SERVICE LINE OR CASING SHALL CONSIST OF FINE GRANULAR MATERIAL. UNSUITABLE IN-SITU MATERIALS SUCH AS MUCK, DEBRIS AND LARGER ROCKS SHALL BE REMOVED WITH 2" MAXIMUM SIZE.
8. METER/SERVICE WILL NOT BE INSTALLED/ACTIVATED UNTIL:
   A. ALL FORM BOARDS FOR DRIVEWAY AND/OR SIDEWALK MUST BE COMPLETELY INSTALLED OR THE DRIVEWAY AND/OR SIDEWALK MUST HAVE BEEN INSTALLED.
   B. "MINIMUM UNOBSTRUCTED SPACE" AS SHOWN IN NOTE 2 AND ON THE PLAN VIEW IS PROVIDED WITH 12" MINIMUM VERTICAL SEPARATION REQUIRED TO ALL OTHER UTILITIES.
   C. THE REQUIRED BACKFLOW PREVENTION ASSEMBLY/DEVICE IS INSTALLED AND HAS PASSED INITIAL TEST.
9. SERVICE COMPONENTS SHALL BE CONSTRUCTED FOR THE METER TO BE INSTALLED "TRUE" AND "PLUMB" AND TO ALLOW METER READING THROUGH THE METER READER LID.
10. APPROVED COPPER SETTER ASSEMBLY REQUIRED. PVC SHALL BE SCHEDULE 40 PIPE WITH SCHEDULE 80 FITTINGS. ALL BRASS FITTINGS SHALL BE "LEAD FREE".
11. METER TO BE INSTALLED BY THE DEPARTMENT. THE PIPING BEYOND THE CONTROL VALVE SHALL BE INSTALLED BY THE DEVELOPER OR THE DEPARTMENT, DEPENDING ON THE TYPE OF SERVICE INSTALLATION REQUESTED.
12. ALL HARDWARE FOR FLANGED CONNECTIONS (BOLTS, ETC.) TO BE STAINLESS STEEL.
13. THREADED AREAS OF CORPORATION STOP AND OTHER FITTINGS SHALL BE SPIRAL WRAPPED WITH TWO (2) WRAPS OF TEFLON TAPE. ALL BRASS FITTINGS SHALL BE "LEAD FREE".
14. METER BOXES IN NON-GRASS AREAS SHALL HAVE TRAFFIC RATED LIDS.
15. A 4" THICK COMPACTED 3/4" ROCK BASE IS REQUIRED. THE BASE SHALL EXTEND MINIMUM 12" BEYOND THE METER BOX PERIMETER.

POTABLE WATER 2" METER INSTALLATION ✳ 7W

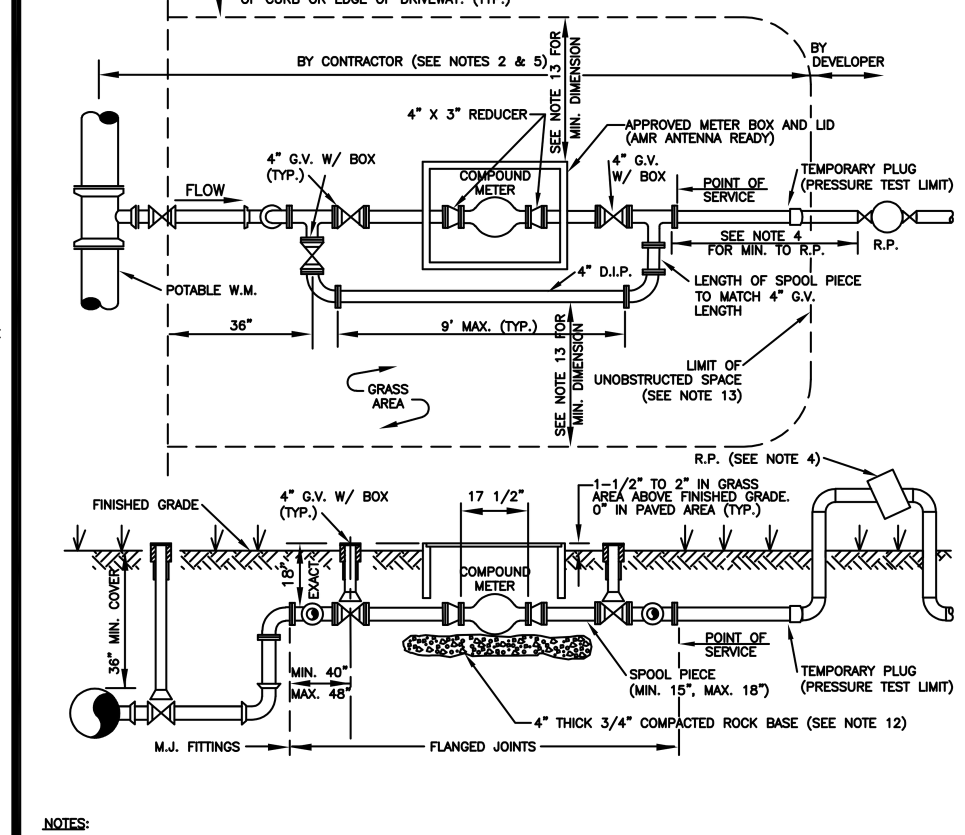

NOTES:

1. ALL SERVICE PIPING SHALL BE 4" DUCTILE IRON WITH 4" GATE VALVES WITH VALVE BOXES AND CONCRETE COLLARS (IF APPLICABLE).
2. ONLY APPROVED METER BOXES SHALL BE USED. THE METER BOX LID SHALL BE A DEPARTMENT APPROVED LID. THE BOX AND LID SHALL BE PROVIDED BY THE CUSTOMER AND PLACED ABOVE GROUND NEAR THE METER LOCATION. THE PROPERTY OWNER SHALL EXCAVATE THE METER BOX AREA TO EXPOSE THE BYPASS PIPING THEN INSTALL THE BOX AND BACKFILL THE AREA AFTER THE METER INSTALLATION.
3. APPROVED RESTRAINED FLANGED ADAPTERS ARE REQUIRED. PLACE 4"x3" FLANGED REDUCERS AS SHOWN ON DETAIL.
4. ALL SERVICES SHALL HAVE AN APPROVED REDUCED PRESSURE PRINCIPLE BACKFLOW PREVENTION ASSEMBLY (R.P.). THE INITIAL TEST OF THE R.P. SHALL BE PERFORMED BY THE DEPARTMENT. THE R.P. SHALL BE INSTALLED AS CLOSE AS POSSIBLE TO THE POINT OF SERVICE AT 36" MINIMUM AND NOT TO EXCEED 48" WITHOUT PRIOR DEPARTMENT APPROVAL.
5. WATER METER SHALL BE INSTALLED BY THE DEPARTMENT. LAYING LENGTH OF THE METER TO BE CONFIRMED PRIOR TO SERVICE INSTALLATION.
6. SERVICE COMPONENTS SHALL BE CONSTRUCTED FOR THE METER TO BE INSTALLED "TRUE" AND "PLUMB".
7. THE ENTIRE ASSEMBLY (WITHOUT METER/SPOOL PIECES AS SHOWN) SHALL BE PRESSURE TESTED AS REQUIRED.
8. METER/SERVICE WILL NOT BE INSTALLED/ACTIVATED UNTIL:
   A. ALL FORM BOARDS FOR DRIVEWAY AND/OR SIDEWALK MUST BE COMPLETELY INSTALLED OR THE DRIVEWAY AND/OR SIDEWALK MUST HAVE BEEN INSTALLED.
   B. "MINIMUM UNOBSTRUCTED SPACE" AS SHOWN IN NOTE 2 AND ON THE PLAN VIEW IS PROVIDED WITH 12" MINIMUM VERTICAL SEPARATION REQUIRED TO ALL OTHER UTILITIES.
   C. THE REQUIRED BACKFLOW PREVENTION ASSEMBLY/DEVICE IS INSTALLED AND HAS PASSED INITIAL TEST.
9. BYPASS PIPING SHALL BE INSTALLED ON THE RIGHT SIDE OF METER IN DIRECTION OF FLOW UNLESS OTHERWISE PREVIOUSLY APPROVED BY THE DEPARTMENT.
10. ALL HARDWARE FOR FLANGED CONNECTIONS (BOLTS, ETC.) TO BE STAINLESS STEEL.
11. METER BOX LID SHALL BE TRAFFIC RATED FOR ALL INSTALLATION LOCATIONS.
12. A 4" THICK COMPACTED 3/4" ROCK BASE IS REQUIRED. THE BASE SHALL EXTEND MINIMUM 12" BEYOND THE METER BOX PERIMETER.
13. LIMIT OF UNOBSTRUCTED SPACE FROM SIDE OF WATER METER BOX AND BYPASS PIPING SHALL BE 36" MINIMUM FOR SHRUBS AND SIMILAR OBSTRUCTIONS WITH 60" MINIMUM FOR TREES, WALLS, AND OTHER SIMILAR OBSTRUCTIONS.

POTABLE WATER 3" METER INSTALLATION ✳ 8W

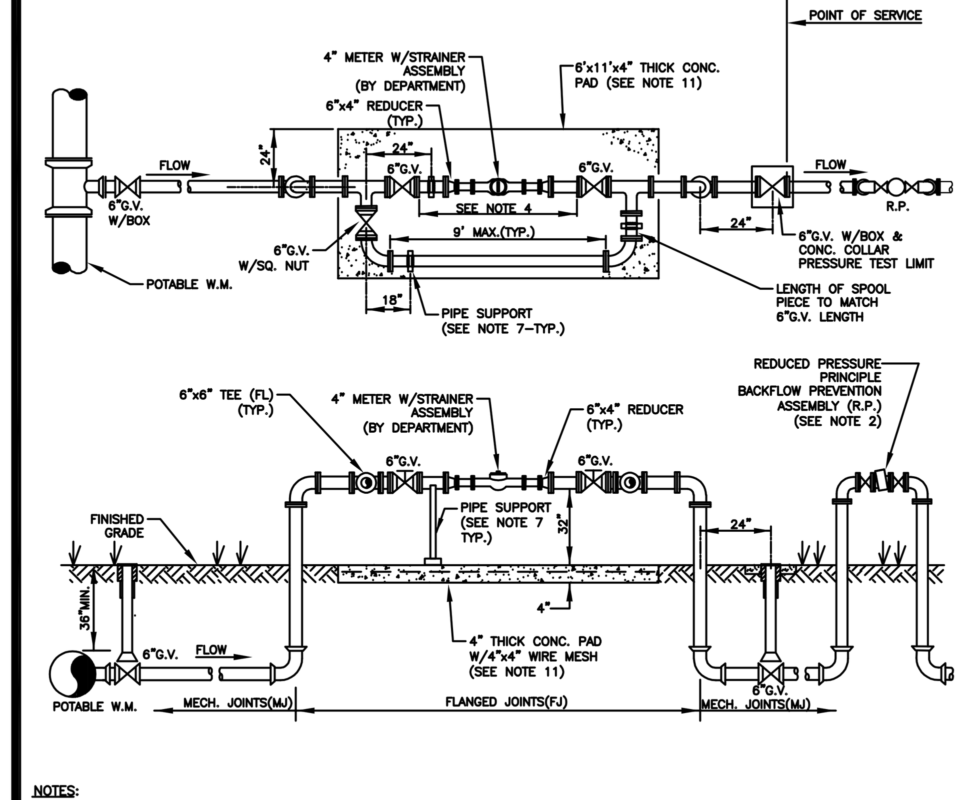

NOTES:

1. ALL SERVICE PIPING SHALL BE 6" DUCTILE IRON WITH 6" GATE VALVES. THE 6" GATE VALVE FOR BYPASS PIPING SHALL HAVE A SQUARE NUT.
2. ALL SERVICES SHALL HAVE AN APPROVED REDUCED PRESSURE PRINCIPLE BACKFLOW PREVENTION ASSEMBLY (R.P.). THE INTITIAL TEST OF THE R.P. SHALL BE PERFORMED BY THE DEPARTMENT. THE R.P. SHALL BE INSTALLED AS CLOSE AS POSSIBLE TO THE POINT OF SERVICE, NOT TO EXCEED 48" WITHOUT PRIOR DEPARTMENT APPROVAL.
3. APPROVED RESTRAINED FLANGED ADAPTERS ARE REQUIRED.
4. THE ENTIRE METER ASSEMBLY INCLUDING BYPASS (EXCLUDING WATER METER) SHALL BE PRESSURE TESTED AS REQUIRED.
5. WATER METER SHALL BE INSTALLED BY THE DEPARTMENT. LAYING LENGTH OF THE METER TO BE CONFIRMED PRIOR TO SERVICE INSTALLATION.
6. SERVICE COMPONENTS SHALL BE CONSTRUCTED FOR THE METER TO BE INSTALLED "TRUE" AND "PLUMB".
7. PIPE SUPPORTS SHALL BE CONSTRUCTED PER WUD STANDARD DETAIL 47W AND SHALL BE LOCATED PER THIS DETAIL.
8. METER/SERVICE WILL NOT BE INSTALLED/ACTIVATED UNTIL:
   A. ALL FORM BOARDS FOR DRIVEWAY AND/OR SIDEWALK MUST BE COMPLETELY INSTALLED OR THE DRIVEWAY AND/OR SIDEWALK MUST HAVE BEEN INSTALLED.
   B. "MINIMUM UNOBSTRUCTED SPACE" AS SHOWN IN NOTE 12 AND ON THE PLAN VIEW IS PROVIDED.
   C. THE REQUIRED BACKFLOW PREVENTION ASSEMBLY/DEVICE IS INSTALLED AND HAS PASSED INITIAL TEST.
9. BYPASS PIPING SHALL BE INSTALLED ON THE RIGHT SIDE OF METER IN DIRECTION OF FLOW UNLESS OTHERWISE PREVIOUSLY APPROVED BY THE DEPARTMENT.
10. ALL HARDWARE FOR FLANGED CONNECTIONS SHALL BE STAINLESS STEEL 304 OR PRIOR APPROVED EQUAL BY THE DEPARTMENT.
11. CONCRETE PAD FOR WATER METER ASSEMBLY SHALL BE 4" THICK WITH 4"x4" WIRE MESH. CONCRETE PAD IS REQUIRED TO BE BROOM FINISHED AND INSTALLED PRIOR TO THE WATER METER ASSEMBLY.
12. LIMIT OF UNOBSTRUCTED SPACE FROM SIDE OF WATER METER ASSEMBLY CONCRETE PAD SHALL BE 36" MINIMUM FOR SHRUBS AND SIMILAR OBSTRUCTIONS WITH 60" MINIMUM FOR TREES, WALLS, AND OTHER SIMILAR OBSTRUCTIONS.

POTABLE WATER 4" METER INSTALLATION ✳ 9W

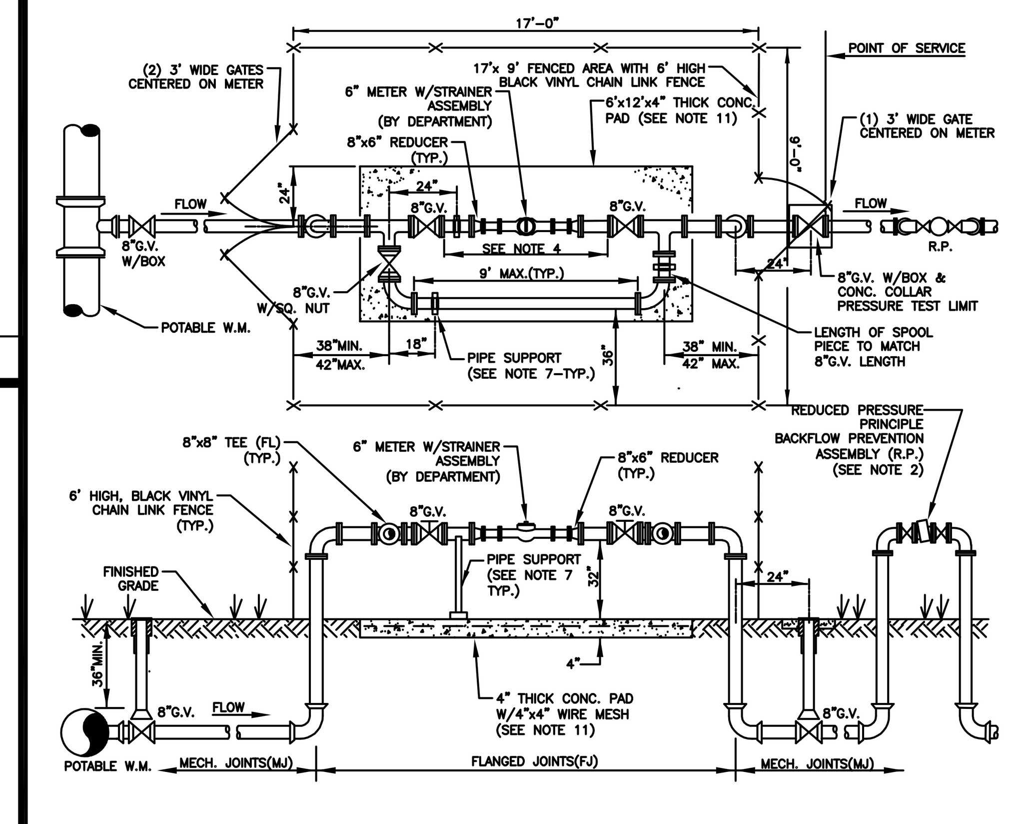

NOTES:

1. ALL SERVICE PIPING SHALL BE 8" DUCTILE IRON WITH 8" GATE VALVES. THE 8" GATE VALVE FOR BYPASS PIPING SHALL HAVE A SQUARE NUT.
2. ALL SERVICES SHALL HAVE AN APPROVED REDUCED PRESSURE PRINCIPLE BACKFLOW PREVENTION ASSEMBLY (R.P.). THE INTITIAL TEST OF THE R.P. SHALL BE PERFORMED BY THE DEPARTMENT. THE R.P. SHALL BE INSTALLED AS CLOSE AS POSSIBLE TO THE POINT OF SERVICE, NOT TO EXCEED 48" WITHOUT PRIOR DEPARTMENT APPROVAL.
3. APPROVED RESTRAINED FLANGED ADAPTERS ARE REQUIRED.
4. THE ENTIRE METER ASSEMBLY INCLUDING BYPASS (EXCLUDING WATER METER) SHALL BE PRESSURE TESTED AS REQUIRED.
5. WATER METER SHALL BE INSTALLED BY THE DEPARTMENT. LAYING LENGTH OF THE METER TO BE CONFIRMED PRIOR TO SERVICE INSTALLATION.
6. SERVICE COMPONENTS SHALL BE CONSTRUCTED FOR THE METER TO BE INSTALLED "TRUE" AND "PLUMB".
7. PIPE SUPPORTS SHALL BE CONSTRUCTED PER WUD STANDARD DETAIL 47W AND SHALL BE LOCATED PER THIS DETAIL.
8. METER/SERVICE WILL NOT BE INSTALLED/ACTIVATED UNTIL:
   A. ALL FORM BOARDS FOR DRIVEWAY AND/OR SIDEWALK MUST BE COMPLETELY INSTALLED OR THE DRIVEWAY AND/OR SIDEWALK MUST HAVE BEEN INSTALLED.
   B. "MINIMUM UNOBSTRUCTED SPACE" AS SHOWN IN NOTE 12 AND ON THE PLAN VIEW IS PROVIDED.
   C. THE REQUIRED BACKFLOW PREVENTION ASSEMBLY/DEVICE IS INSTALLED AND HAS PASSED INITIAL TEST.
9. BYPASS PIPING SHALL BE INSTALLED ON THE RIGHT SIDE OF METER IN DIRECTION OF FLOW UNLESS OTHERWISE PREVIOUSLY APPROVED BY THE DEPARTMENT.
10. ALL HARDWARE FOR FLANGED CONNECTIONS SHALL BE STAINLESS STEEL 304 OR PRIOR APPROVED EQUAL BY THE DEPARTMENT.
11. CONCRETE PAD FOR WATER METER ASSEMBLY SHALL BE 4" THICK WITH 4"x4" WIRE MESH. CONCRETE PAD IS REQUIRED TO BE BROOM FINISHED AND INSTALLED PRIOR TO THE WATER METER ASSEMBLY.
12. LIMIT OF UNOBSTRUCTED SPACE FROM SIDE OF WATER METER ASSEMBLY CONCRETE PAD SHALL BE 36" MINIMUM FOR SHRUBS AND SIMILAR OBSTRUCTIONS WITH 60" MINIMUM FOR TREES, WALLS, AND OTHER SIMILAR OBSTRUCTIONS.

POTABLE WATER 6" METER INSTALLATION ✳ 10W

POTABLE WATER #1 STANDARD DETAILS

CONSULTANT:

IT'S THE LAW ! CALL 48 HOURS BEFORE YOU DIG **1-800-432-4770** SUNSHINE STATE ONE CALL OF FLORIDA, INC. UTILITIES NOTIFICATION CENTER

DESIGNED BY: WUD
DRAWN BY: M. BUCKNER
CHECKED BY: J. LAMMERT
APPROVED BY: WUD

Palm Beach County
Water Utilities Department
P.O.Box 16097
West Palm Beach, FL 33416-6097

PROJECT NO. 22-___

OXYGEN DEVELOPMENT

PALM BEACH COUNTY WATER UTILITIES DEPARTMENT P.O. BOX 16097 WEST PALM BEACH, FL 33416 (561)493-6000

NO.	DATE	REVISION / REMARKS	BY
	JUNE 2019	✳ GENERAL REVISION	J.L.

STD DETAILS

SHEET NUMBER 14 OF 23

SEAL

SCOTT M. GINTERT, P.E
FLORIDA P.E. #84228
Jul 21, 2022

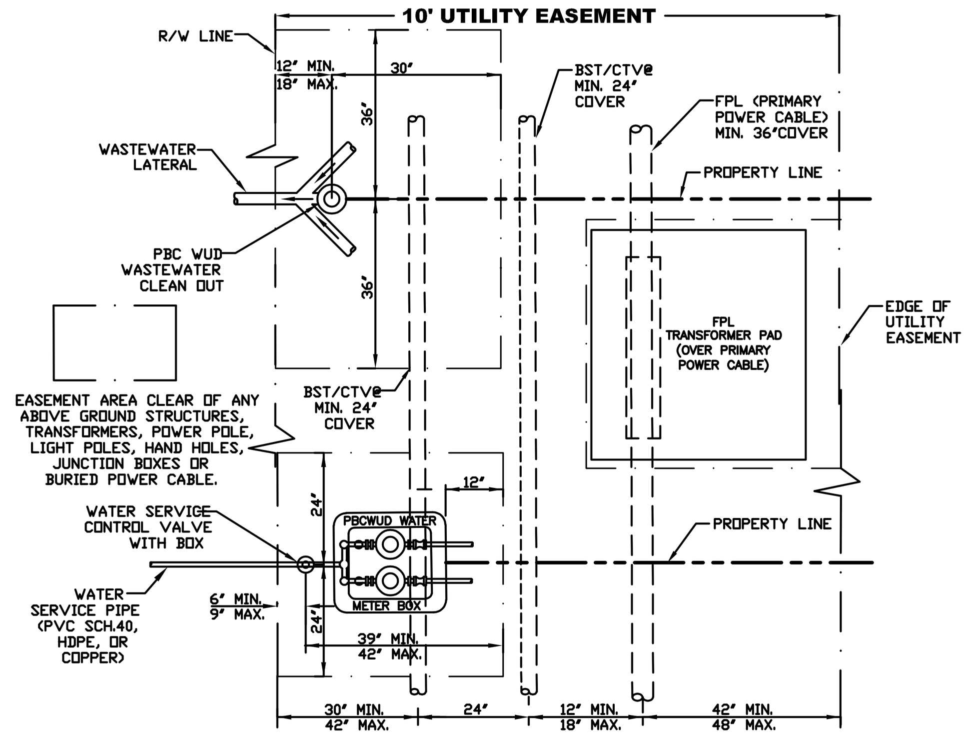

PLAN (N.T.S.)

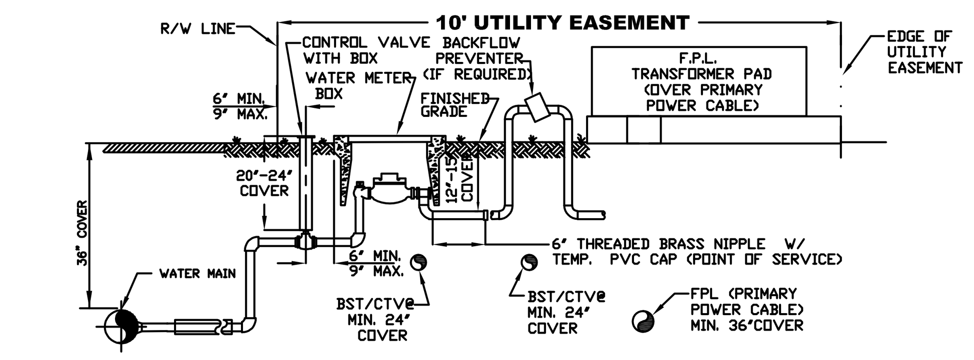

PROFILE (N.T.S.)

NOTES:

1. THE DETAIL WAS DEVELOPED IN COLLABORATION WITH UTILITY COMPANIES SUPPLYING VARIOUS UTILITY SERVICES TO P.B.C.W.U.D. CUSTOMERS.
2. THE DIMENSIONS SHOWN SHALL SERVE AS A GENERAL GUIDELINE TO INSTALL UTILITIES WITHIN A 10' WIDE UTILITY EASEMENT PARALLELING A RIGHT-OF-WAY.
3. THE PARTICIPATING UTILITIES PLEDGE TO OBSERVE, FOLLOW, AND ENFORCE THE INSTALLATION PARAMETERS SHOWN ON THIS DETAIL.

TYPICAL UTILITY INSTALLATION DETAIL IN A 10' UTILITY EASEMENT ADJACENT TO R/W *

11W

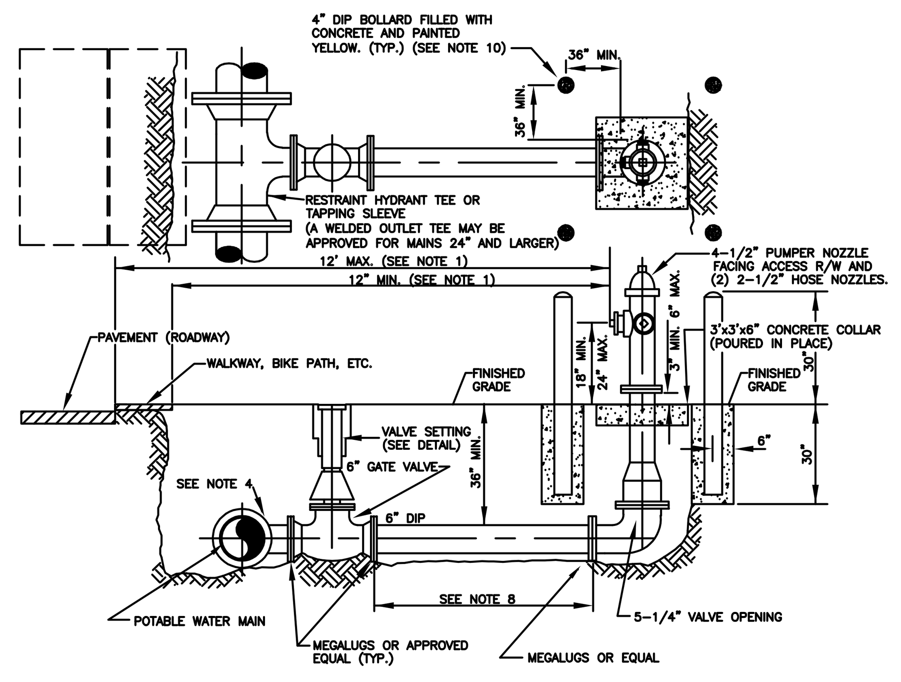

NOTES:

1. FIRE HYDRANT SHALL BE INSTALLED PLUMB AND TRUE IN UNOBSTRUCTED LOCATION AND SHALL NOT INTERFERE WITH PEDESTRIAN WALKWAYS, BIKE PATHS, AND SUCH OTHER SIMILAR PATHWAYS WITH THE EDGE OF THE PUMPER NOZZLE AND/OR HOSE NOZZLES BEING A MINIMUM OF 12" BEHIND SUCH PATHWAYS. A MINIMUM OF 7.5' FEET CLEARANCE IS REQUIRED FROM EACH SIDE AND REAR OF THE HYDRANT. THE FRONT OF THE HYDRANT PUMPER NOZZLE SHALL BE LOCATED A MAXIMUM OF 12' FROM THE EDGE OF PAVEMENT UNLESS OTHERWISE PREVIOUSLY APPROVED BY THE FIRE MARSHAL OFFICE HAVING JURISDICTION.
2. THE SAME MODEL HYDRANT SHALL BE USED THROUGHOUT CURRENT CONTRACT PHASE. HYDRANTS MUST BE ORDERED RED IN COLOR, WITH FINISHED EPOXY COAT APPLIED BY THE HYDRANT MANUFACTURER. HYDRANT SHALL BE FACTORY EQUIPPED WITH PLUGGED DRAIN HOLES.
3. VALVE SHALL BE PLACED ADJACENT TO MAIN AND RESTRAINED WITH MEGALUGS OR EQUAL.
4. HYDRANT TEES ARE PREFERRED.
5. ALL HYDRANTS SHALL BE TEE'D OFF OF MAINS
6. HYDRANTS SHALL NOT BE PLACED IN SIDEWALKS, ROADWAYS, OR BIKEPATHS.
7. FIRE HYDRANT SHALL BE LOCATED 5' MINIMUM FROM EDGE OF PAVEMENT WITH RAISED CURBING AND 6' MINIMUM WITHOUT RAISED CURBING.
8. ON RUNS LONGER THAN 60 FEET ANOTHER VALVE IS REQUIRED LESS THAN ONE PIPE JOINT OF THE HYDRANT.
9. PAINT SAFETY RED, IF REQUIRED, WITH APPROVED PAINT.
10. BOLLARDS MAY BE REQUIRED FOR HYDRANTS WITH LESS THAN SIX (6) FEET TO EDGE OF PAVEMENT WITHOUT RAISED CURBING. NO BOLLARDS SHALL BE INSTALLED IN COUNTY AND/OR FDOT RIGHT-OF-WAY "CLEAR ZONE".
11. BURIED HYDRANT HARDWARE SHALL BE STAINLESS STEEL (TYPE 304L OR TYPE 304 BOLTS/TYPE 304 NUTS).
12. NO CONNECTION (TEE, TAP) IS ALLOWED BETWEEN THE HYDRANT CONTROL VALVE AND THE FIRE HYDRANT.
13. APPROVED SECURITY CAPS WITH CHAINS ARE REQUIRED FOR ALL NOZZLES.

TYPICAL FIRE HYDRANT INSTALLATION WITH BOLLARDS DETAIL *

12W

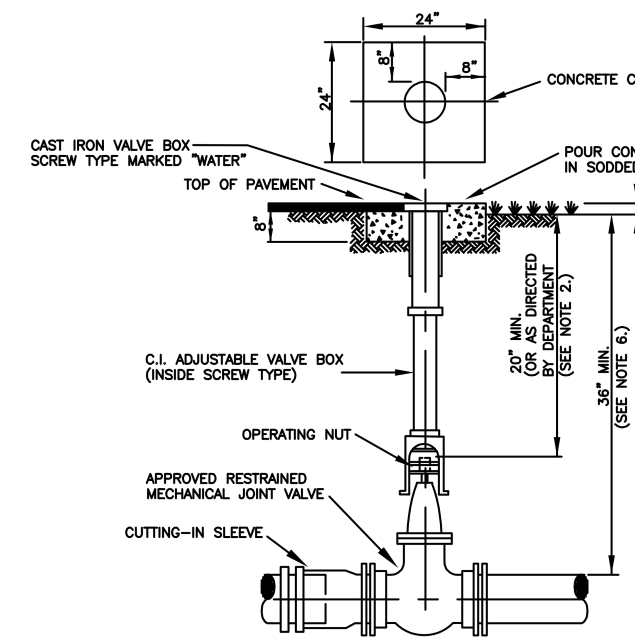

NOTES:

1. CONCRETE COLLAR IS NOT REQUIRED IN PAVED AREAS IF PAVEMENT SURFACE IS FINISHED PRIOR TO CONDITIONAL FINAL INSPECTION.
2. WHEN OPERATING NUT IS DEEPER THAN 36" A ONE PIECE EXTENSION WILL BE REQUIRED TO BRING OPERATING NUT 20"-30" BELOW FINISHED GRADE. EXTENSION BOLTS & NUTS ARE TO BE STAINLESS STEEL. A HIGH STRENGTH STEEL CENTERING PLATE, WELDED TO THE EXTENSION, IS ALSO REQUIRED.
3. VALVE BOXES SHALL HAVE COVERS MARKED "WATER".
4. VALVE BOX EXTENSION TO BE D.I.P. OR C-900 PVC SDR 18 (BLUE)
5. A CUT-IN INSTALLATION SHALL REQUIRE MEGALUGS OR EQUAL THROUGHOUT ASSEMBLY.
6. IN ORDER TO MAINTAIN ADEQUATE COVER OVER VALVE NUT, THE FOLLOWING MINIMUM COVERS OVER PIPE ARE REQUIRED

GATE VALVE SIZE	MIN. COVER OVER PIPE
16"	48"
20"	54"
24"	60"
30"	72"
36"	84"

7. VALVES IN ROADWAYS SHALL BE LOCATED OUTSIDE OF WHEEL PATHS WHENEVER POSSIBLE.

POTABLE WATER MAIN TYPICAL GATE VALVE SETTING AND MAIN CUT-IN DETAIL

13W

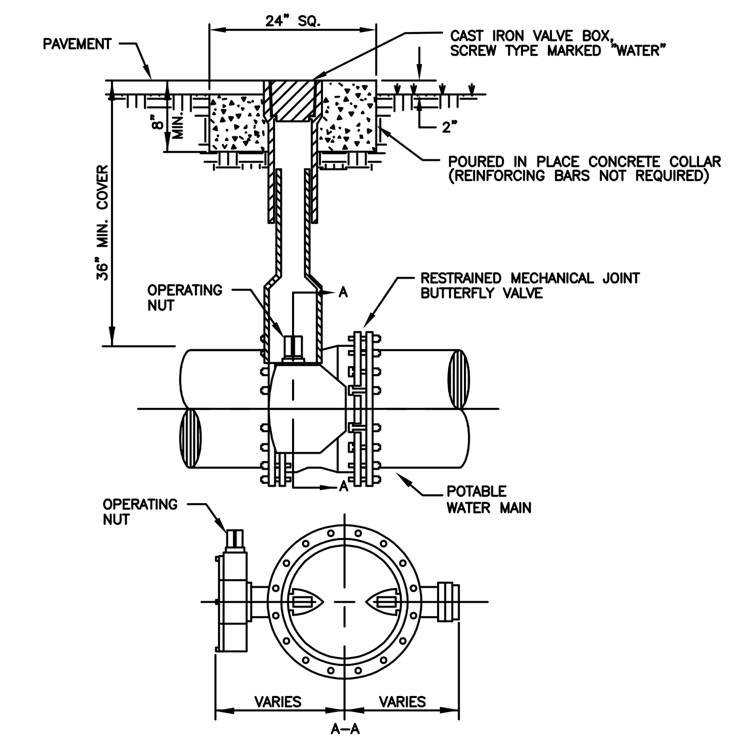

NOTES:

1. CONCRETE COLLAR IS NOT REQUIRED IN PAVED AREAS IF PAVEMENT SURFACE IS FINISHED PRIOR TO CONDITIONAL FINAL INSPECTION.
2. WHEN TOP OF OPERATING NUT IS DEEPER THAN 42" AN EXTENSION WILL BE REQUIRED TO BRING OPERATING NUT 24"-30" BELOW FINISHED GRADE. EXTENSION BOLTS & NUTS ARE TO BE STAINLESS STEEL. A HIGH STRENGTH STEEL CENTERING PLATE, WELDED TO THE EXTENSION, IS ALSO REQUIRED.
3. VALVE BOXES SHALL HAVE COVERS MARKED "WATER".
4. A CUT-IN INSTALLATION SHALL REQUIRE MEGALUGS OR EQUAL THROUGHOUT ASSEMBLY.
5. EXTENSION VALVE BOX TO BE D.I.P. OR C-900 PVC DR 18 (COLOR: BLUE)
6. VALVES IN ROADWAYS SHALL BE LOCATED OUTSIDE OF WHEEL PATHS WHENEVER POSSIBLE.

POTABLE WATER MAIN TYPICAL BUTTERFLY VALVE SETTING

14W

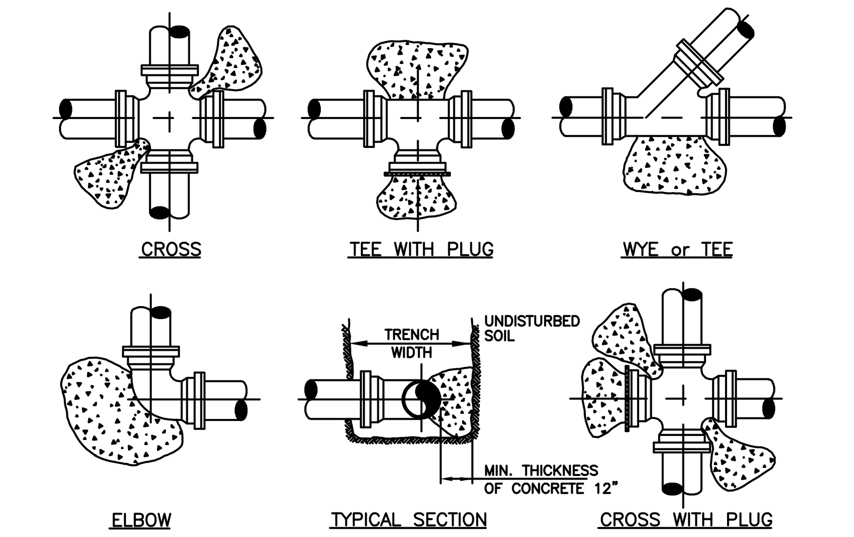

PIPE	THRUST BLOCK AREA REQ'D	REMARKS	NOTE: FOR OTHER FITTINGS USE THE FOLLOWING FACTORS.
4"	2.0 SQ. FT.	VALUES ARE FOR 90° BEND, BASED ON 2000 P.S.F. SAFE BEARING LOAD AND PIPE PRESSURE OF 150 P.S.I. FOR OTHER SOILS & PRESSURES THE AREA REQUIRED IS IN DIRECT PROPORTION	TEE 100% 45° BEND 71% 22 1/2° BEND 39% 11 1/4° BEND 20% DEAD END 100%
6"	4.0 SQ. FT.		
8"	6.6 SQ. FT.		
10"	10.0 SQ. FT.		
12"	14.0 SQ. FT.		
14"	18.6 SQ. FT.		

NOTES:

1. CONCRETE THRUST BLOCKS OR THRUST COLLARS MAY BE UTILIZED ONLY IF NECESSARY FOR CONNECTIONS TO AN EXISTING PIPING SYSTEM, OTHERWISE MECHANICAL RESTRAINTS SHALL BE USED. KEEP "T" BOLTS CLEAR OF CONCRETE, WRAPPED IN VISQUEEN FOR FUTURE ACCESS, WITH A MINIMUM OF 1' THICKNESS BETWEEN THE FITTING AND SOIL.
2. BEFORE POURING CONCRETE, PLUGS SHALL BE WRAPPED WITH VISQUEEN AND A BOARD PLACED IN FRONT.
3. CONCRETE SHALL BE 2500 P.S.I. MINIMUM.
4. THE ENGINEER OF RECORD SHALL SUBMIT A THRUST BLOCK SIZE CALCULATION FOR TEE CONNECTIONS INTO UNRESTRAINED EXISTING MAINS LARGER THAN 14".
5. THE ENGINEER OF RECORD SHALL SUBMIT A PIPE RESTRAINT DESIGN FOR INLINE EXTENSIONS OF A EXISTING UNRESTRAINED MAIN IF MECHANICAL JOINT RESTRAINT CAN NOT BE INSTALLED ON THE EXISTING MAIN.

TYPICAL THRUST BLOCKS FOR PRESSURE PIPE

20W

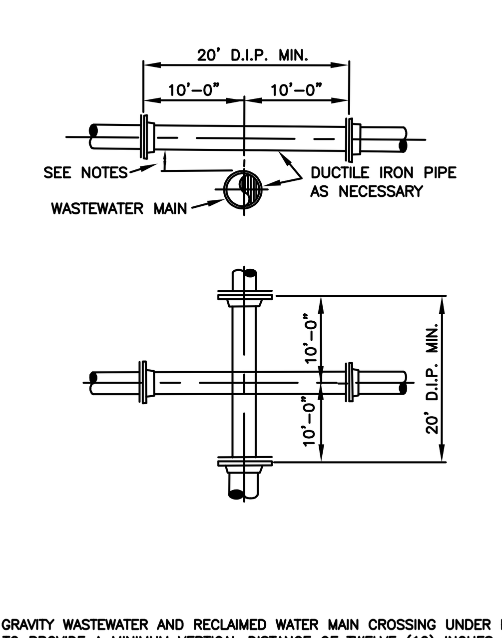

NOTES:

1. STORM SEWER, GRAVITY WASTEWATER AND RECLAIMED WATER MAIN CROSSING UNDER POTABLE WATER MAINS SHALL BE LAID TO PROVIDE A MINIMUM VERTICAL DISTANCE OF TWELVE (12) INCHES BETWEEN THE INVERT OF THE UPPER PIPE AND THE CROWN OF THE LOWER PIPE. WHERE THIS MINIMUM SEPARATION CANNOT BE MAINTAINED, THE CROSSING SHALL BE ARRANGED SO THAT THE STORM/WASTEWATER/RECLAIMED WATER PIPE JOINTS AND POTABLE WATER MAIN JOINTS ARE EQUIDISTANT FROM THE POINT OF CROSSING WITH NO LESS THAN TEN (10) FEET BETWEEN ANY TWO JOINTS, BOTH PIPES SHALL BE D.I.P., AND THE MINIMUM VERTICAL SEPARATION SHALL BE 6 INCHES. WHERE THERE IS NO ALTERNATIVE TO STORM/WASTEWATER/RECLAIMED WATER PIPES CROSSING OVER A POTABLE WATER MAIN, THE CRITERIA FOR MINIMUM 12" VERTICAL SEPARATION BETWEEN LINES AND JOINT ARRANGEMENT, AS STATED ABOVE, SHALL BE REQUIRED, AND BOTH PIPES SHALL BE D.I.P. IRRESPECTIVE OF SEPARATION. D.I.P. IS NOT REQUIRED FOR STORM SEWERS.
2. WHENEVER POSSIBLE MAINTAIN MIN. TEN (10) FEET HORIZONTAL DISTANCE (WALL TO WALL) BETWEEN POTABLE WATER MAIN AND STORM SEWER, WASTEWATER MAIN, OR FORCE MAIN (A MIN. 6' SEPARATION MAY BE APPROVED ON A CASE BY CASE BASIS). MAINTAIN MIN. THREE (3) FEET HORIZONTAL DISTANCE (WALL TO WALL) BETWEEN RECLAIMED WATER MAIN AND POTABLE WATER MAIN, STORM SEWER, WASTEWATER GRAVITY MAIN OR FORCE MAIN.
3. FORCE MAIN CROSSING POTABLE WATER MAIN OR RECLAIMED WATER MAIN SHALL BE LAID TO PROVIDE A MINIMUM VERTICAL DISTANCE OF TWELVE (12) INCHES BETWEEN THE OUTSIDE OF THE FORCE MAIN AND OUTSIDE OF THE POTABLE WATER MAIN OR RECLAIMED WATER MAIN WITH THE POTABLE WATER MAIN OR RECLAIMED WATER MAIN CROSSING OVER THE FORCE MAIN.
4. WASTEWATER LATERALS SHALL CROSS UNDER POTABLE WATER MAINS WITH A MIN. 12" VERTICAL SEPARATION WHENEVER POSSIBLE. WHERE THIS MINIMUM SEPARATION CANNOT BE MAINTAINED, A 20' SECTION OF DUCTILE IRON PIPE POTABLE WATER MAIN CENTERED ON THE CROSSING IS REQUIRED AND THE MINIMUM VERTICAL SEPARATION SHALL BE 6". WHERE THERE IS NO ALTERNATIVE TO A WASTEWATER LATERAL PIPE CROSSING OVER A POTABLE WATER MAIN, A MINIMUM 12" VERTICAL SEPARATION IS REQUIRED, THE LATERAL SHALL BE P.V.C. C-900 SDR18 OR BETTER, THE POTABLE WATER MAIN SHALL BE D.I.P. AND THE PIPE JOINTS SHALL BE EQUIDISTANT FROM THE POINT OF CROSSING.
5. POTABLE WATER SERVICE LINES SHALL CROSS OVER WASTEWATER MAINS WITH MIN. 12" VERTICAL SEPARATION. WHERE THIS MIN. SEPARATION CAN NOT BE MAINTAINED, THE WATER SERVICE SHALL BE ENCASED IN A MIN. 10' LONG CASING CENTERED OVER THE CROSSING WITH MIN. 6" VERTICAL SEPARATION.
6. WASTEWATER MAINS, WATER MAINS, STORM PIPES AND OTHER UTILITY PIPES SHALL CROSS PERPENDICULAR WHENEVER POSSIBLE.

POTABLE WATER, WASTEWATER MAIN AND STORM SEWER CONFLICT

18W

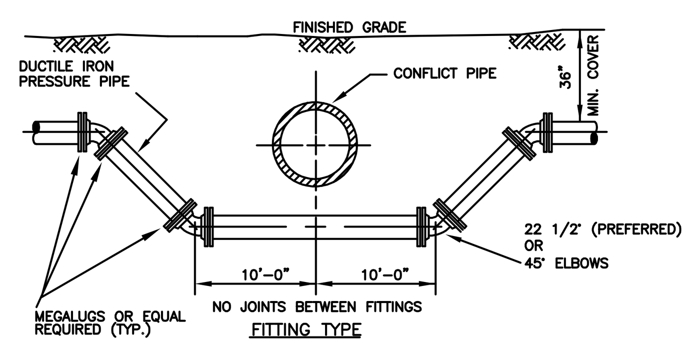

FITTING TYPE

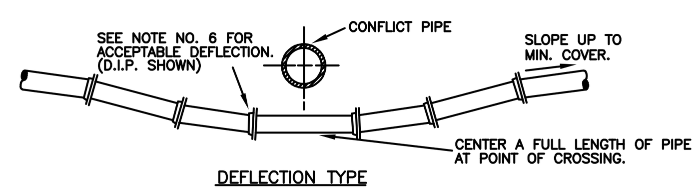

DEFLECTION TYPE

NOTES:

1. STORM SEWER, GRAVITY WASTEWATER AND RECLAIMED WATER MAIN CROSSING UNDER POTABLE WATER MAINS SHALL BE LAID TO PROVIDE A MINIMUM VERTICAL DISTANCE OF TWELVE (12) INCHES BETWEEN THE INVERT OF THE UPPER PIPE AND THE CROWN OF THE LOWER PIPE. WHERE THIS MINIMUM SEPARATION CANNOT BE MAINTAINED, THE CROSSING SHALL BE ARRANGED SO THAT THE STORM/WASTEWATER/RECLAIMED WATER PIPE JOINTS AND POTABLE WATER MAIN JOINTS ARE EQUIDISTANT FROM THE POINT OF CROSSING WITH NO LESS THAN TEN (10) FEET BETWEEN ANY TWO JOINTS, BOTH PIPES SHALL BE D.I.P., AND THE MINIMUM VERTICAL SEPARATION SHALL BE 6 INCHES. WHERE THERE IS NO ALTERNATIVE TO STORM/WASTEWATER/RECLAIMED WATER PIPES CROSSING OVER A POTABLE WATER MAIN, THE CRITERIA FOR MINIMUM 12" VERTICAL SEPARATION BETWEEN LINES AND JOINT ARRANGEMENT, AS STATED ABOVE, SHALL BE REQUIRED, AND BOTH PIPES SHALL BE D.I.P. IRRESPECTIVE OF SEPARATION. D.I.P. IS NOT REQUIRED FOR STORM SEWERS.
2. WHENEVER POSSIBLE MAINTAIN MIN. TEN (10) FEET HORIZONTAL DISTANCE (WALL TO WALL) BETWEEN POTABLE WATER MAIN AND STORM SEWER, WASTEWATER MAIN, OR FORCE MAIN (A MIN. 6' SEPARATION MAY BE APPROVED ON A CASE BY CASE BASIS.) MAINTAIN MIN. THREE (3) FEET HORIZONTAL DISTANCE (WALL TO WALL) BETWEEN RECLAIMED WATER MAIN AND POTABLE WATER MAIN, STORM SEWER, WASTEWATER GRAVITY MAIN OR FORCE MAIN.
3. FORCE MAIN CROSSING POTABLE WATER MAIN OR RECLAIMED WATER MAIN SHALL BE LAID TO PROVIDE A MINIMUM VERTICAL DISTANCE OF TWELVE (12) INCHES BETWEEN THE OUTSIDE OF THE FORCE MAIN AND OUTSIDE OF THE POTABLE WATER MAIN OR RECLAIMED WATER MAIN WITH THE POTABLE WATER MAIN OR RECLAIMED WATER MAIN CROSSING OVER THE FORCE MAIN.
4. FITTINGS SHALL BE RESTRAINED.
5. THE DEFLECTION TYPE CROSSING IS PREFERRED.
6. DO NOT EXCEED 75% OF MANUFACTURERS RECOMMENDED MAXIMUM JOINT DEFLECTION FOR DUCTILE IRON PIPE. PVC PIPE CURVATURE MAY ONLY BE ACCOMPLISHED BY INSTALLING APPROPRIATE BENDS.
7. ALL EXPOSED TIE STEEL SHALL BE COATED WITH COAL-TAR EPOXY.
8. POTABLE WATER SERVICE LINES SHALL CROSS OVER WASTEWATER MAINS WITH MIN. 12" VERTICAL SEPARATION. WHERE THIS MIN. SEPARATION CAN NOT BE MAINTAINED, THE WATER SERVICE SHALL BE ENCASED IN A MIN. 10' LONG CASING CENTERED OVER THE CROSSING WITH MIN. 6" VERTICAL SEPARATION.
9. WASTEWATER MAINS, WATER MAINS, STORM PIPES AND OTHER UTILITY PIPES SHALL CROSS PERPENDICULAR WHENEVER POSSIBLE.

POTABLE WATER MAIN / FORCE MAIN PRESSURE PIPE CONFLICT DETAIL

19W

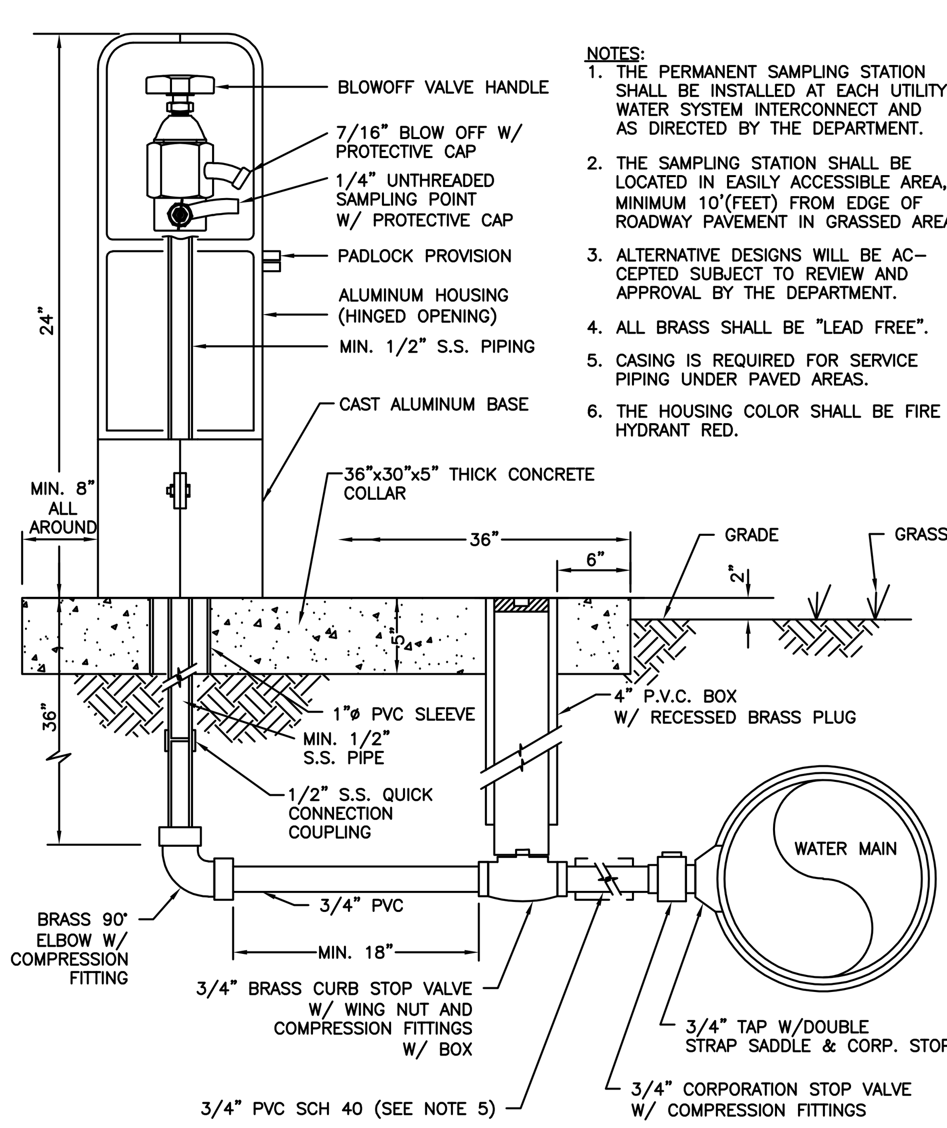

NOTES:

1. THE PERMANENT SAMPLING STATION SHALL BE INSTALLED AT EACH UTILITY WATER SYSTEM INTERCONNECT AND AS DIRECTED BY THE DEPARTMENT.
2. THE SAMPLING STATION SHALL BE LOCATED IN EASILY ACCESSIBLE AREA, MINIMUM 10'(FEET) FROM EDGE OF ROADWAY PAVEMENT IN GRASSED AREA.
3. ALTERNATIVE DESIGNS WILL BE ACCEPTED SUBJECT TO REVIEW AND APPROVAL BY THE DEPARTMENT.
4. ALL BRASS SHALL BE "LEAD FREE".
5. CASING IS REQUIRED FOR SERVICE PIPING UNDER PAVED AREAS.
6. THE HOUSING COLOR SHALL BE FIRE HYDRANT RED.

PERMANENT SAMPLING POINT

15W

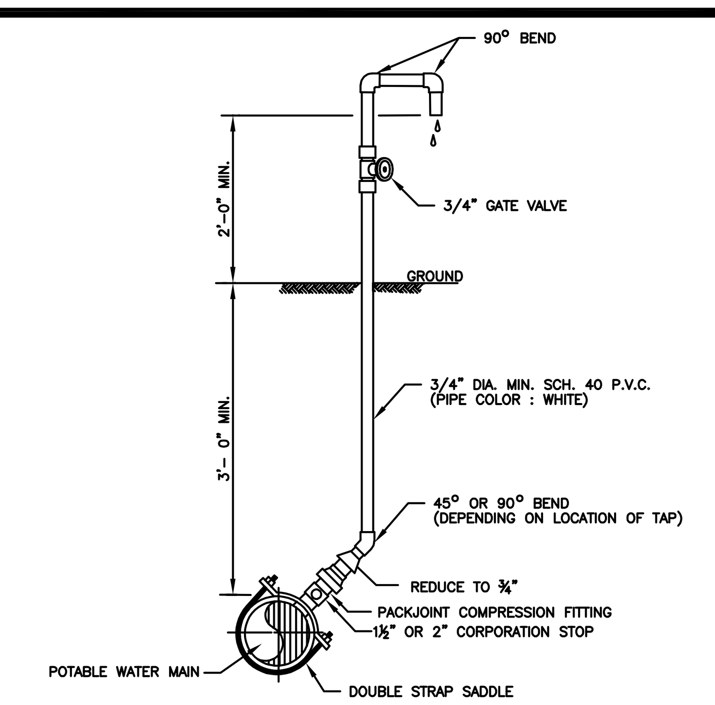

NOTE:

1. SAMPLE POINT SHOULD BE A SERVICE LINE OR FIRE HYDRANT IF POSSIBLE.
2. THREADED AREAS OF CORPORATION STOP SHALL BE SPIRAL WRAPPED WITH TWO WRAPS OF TEFLON TAPE.
3. CLOSE AND CAP CORPORATION STOP AFTER SAMPLING COMPLETION.

POTABLE WATER MAIN TEMPORARY SAMPLING POINT

16W

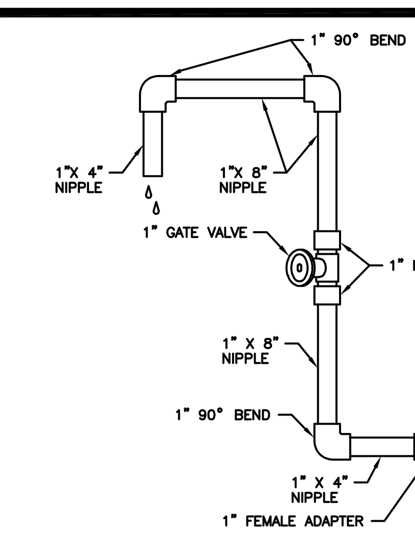

NOTES:

1. USE HYDRANT WRENCH ONLY.
2. ALL PIPES AND FITTINGS SCH. 40 P.V.C. (PIPE COLOR : WHITE).

POTABLE WATER MAIN FIRE HYDRANT SAMPLING POINT

17W

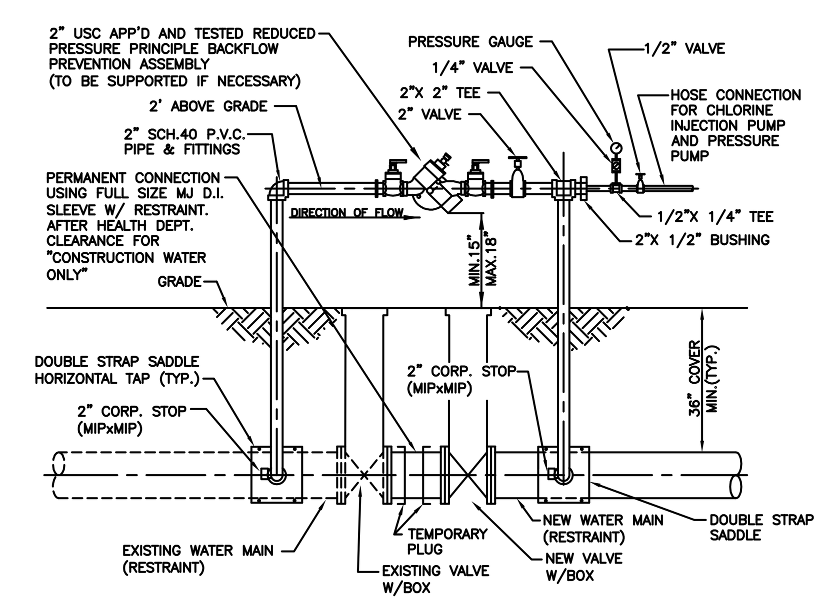

1. ENSURE PROPER RESTRAINT OF EXISTING VALVE AND EXISTING PIPE PRIOR TO NEW PIPE CONNECTION.
2. ENSURE PROPER OPERATION OF EXISTING VALVE.
3. INSTALL BY-PASS PIPING AS SHOWN. A NEARBY HYDRANT OR SERVICE TAP MAY BE USED AS A WATER SOURCE.
4. USING BY-PASS AND CHLORINE INJECTOR PUMP, DISINFECT NEW WATER MAIN (MIN. 50 CHLORINE PPM IS REQUIRED FOR DISINFECTION).
5. COMPLETE FILLING OF THE NEW WATER MAIN AND PERFORM BACTERIOLOGICAL TESTING.
6. REMOVE EXISTING BLOW OFF (IF APPLICABLE) AND EXISTING PLUG., CONNECT NEW MAIN TO EXISTING VALVE.
7. CRACK OPEN EXISTING VALVE AFTER INITIAL DISINFECTION AND FLUSH THE NEW WATER MAIN (PBCWUD PRESENCE IS REQUIRED).
8. REMOVE BY-PASS PIPING. CAP CORPORATION STOPS WITH BRASS CAPS.
9. PRESSURE TESTING IS REQUIRED AFTER SUCCESSFUL COMPLETION OF BACTERIOLOGICAL TESTING AND HEALTH DEPARTMENT RELEASE FOR "CONSTRUCTION WATER"(IF APPLICABLE). PRESSURE TEST TO BE PERFORMED AFTER BACKFILL/ ROAD BASE AND ROAD ROCK BASE INSTALLATION/ COMPACTION.
10. AN ALTERNATIVE TIE-IN PROCEDURE (PRESSURE TESTING PRIOR TO BACTERIOLOGICAL TESTING) MAY BE CONSIDERED WITH PRIOR APPROVAL (SEE SEPARATE DETAIL).
11. RECORD DRAWINGS TO SHOW DATA FOR ALL TEST TAPS.
12. ALL BRASS SHALL BE "LEAD FREE".

STANDARD POTABLE WATER MAIN TIE-IN

33W

POTABLE WATER #2 STANDARD DETAILS

CONSULTANT:

IT'S THE LAW ! CALL 48 HOURS BEFORE YOU DIG **1-800-432-4770** SUNSHINE STATE ONE CALL OF FLORIDA, INC. UTILITIES NOTIFICATION CENTER

DESIGNED BY: WUD
DRAWN BY: M. BUCKNER
CHECKED BY: J. LAMMERT
APPROVED BY: WUD

Palm Beach County
Water Utilities Department
P.O.Box 16097
West Palm Beach, FL 33416-6097

PROJECT NO. 22-___

OXYGEN DEVELOPMENT

PALM BEACH COUNTY FLORIDA

PALM BEACH COUNTY WATER UTILITIES DEPARTMENT P.O. BOX 16097 WEST PALM BEACH, FL 33416 (561)493-6000

NO.	DATE	REVISION / REMARKS	BY
*	JUNE 2019	GENERAL REVISION	J.L.

STD DETAILS

SHEET NUMBER 15 OF 23

SEAL

SCOTT M. GINTERT, P.E. FLORIDA P.E. #84228 Jul 21, 2022

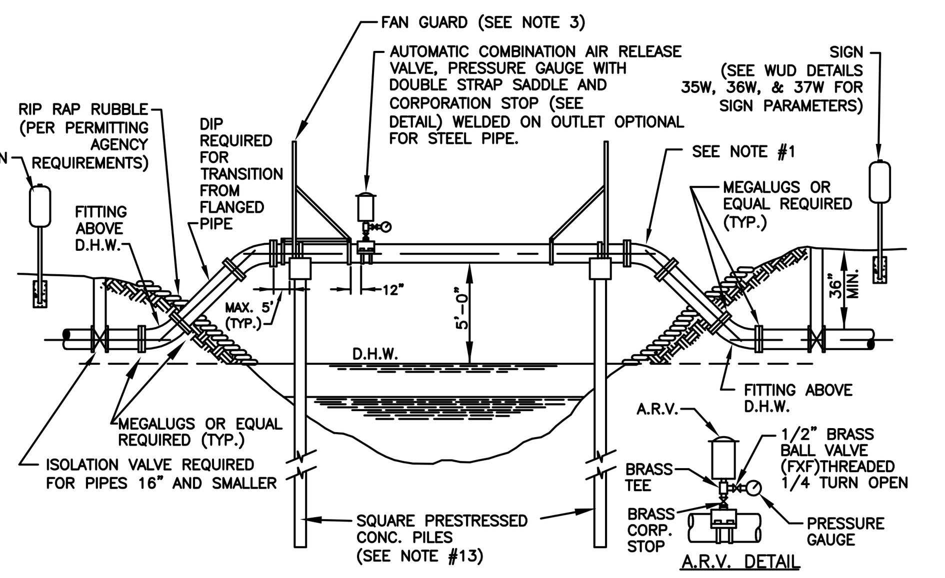

NOTES:

1. ALL EXPOSED PIPE SHALL BE DUCTILE IRON OR PREFABRICATED STEEL WITH FLANGED FITTINGS AND PROFILED GASKETS. RETAINER GLANDS AND UNIFLANGE TYPE FITTINGS ARE NOT TO BE SUBSTITUTED FOR FLANGED FITTINGS. PREFABRICATED STEEL PIPE MAY INCORPORATE WELDED ON LONG RADIUS UPPER BENDS. PREFABRICATED FLANGED PIPE SHALL BE FACTORY TESTED.
2. SPAN LENGTHS AS REQUIRED BY PERMITTING AGENCY
3. FAN GUARDS ARE REQUIRED. SEE FAN GUARD/PILE CAP DESIGN DETAILS FOR ADDITIONAL REQUIREMENTS. ACCESS PLATFORM AND GATE REQUIRED ON ARV SIDE ONLY.

4A. ALL EXPOSED PIPING SHALL BE PAINTED AS SPECIFIED IN THE APPROVED MATERIAL LIST.

4B. ALL HARDWARE SHALL BE PAINTED WITH COAL-TAR EPOXY.

5. PIPE SHALL BE CRADLED ON ½" THICK NEOPRENE.(DUROMETER GRADE 50,) CURRENT FDOT STANDARDS APPLY. NEOPRENE IS REQUIRED AT ALL STRAPS INSTALLED OVER STEEL PIPE. NEOPRENE SHALL EXTEND MIN. 1" BEYOND THE EDGES OF CRADLE AND STRAPS.
6. TIE-DOWN STRAPS MUST PROPERLY FIT AND SECURE PIPE IN CRADLE.
7. PIPE CRADLE IN CAP SHALL CONTACT ⅓ CIRCUMFERENCE OF PIPE. (SEE FAN GUARD DETAIL)
8. SHOW EXISTING CANAL CROSS SECTION ULTIMATE CANAL SECTION AND RELEVANT ELEVATIONS AND DISTANCES ON A TO SCALE DETAIL DRAWING.
9. PILE LIFT CABLE SHALL BE REMOVED BELOW SURFACE; HOLE SHALL BE FILLED WITH EPOXY CEMENT.
10. THREADED AREAS OF BRASS FITTINGS SHALL BE SPIRAL WRAPPED WITH TWO WRAPS OF TEFLON TAPE.
11. THE PRESSURE GAUGE SHALL FACE THE CLOSEST FAN GUARD.
12. THE PRESSURE GAUGE SHALL BE "ASHCROFT NO. 45-1009A" OR APPROVED EQUAL.
13. THE PILES AND CAP DESIGN SHALL BE SHOWN ON TO SCALE SIGNED AND SEALED DETAIL DRAWINGS. (MIN. 12"x12" TYPE 1A FLORIDA DOT INDEX PILES ARE REQUIRED.) PILE PENETRATION BELOW CANAL BOTTOM SHALL BE 15' MINIMUM. MINIMUM LOAD CAPACITY OF 20 TONS PER PILE IS REQUIRED (FDOT STANDARDS APPLY). SIGNED AND SEALED SHOP DRAWINGS ARE REQUIRED.
14. STEEL PIPE SHALL HAVE WELDED ON BEARING PADS EXTENDING MIN. 1" BEYOND PIPE CRADLE THE PADS SHALL BE INSTALLED PRIOR TO PAINTING

POTABLE WATER MAIN TYPICAL AERIAL CANAL CROSSING – SINGLE PIPE (SINGLE PILES) ✳ 26W

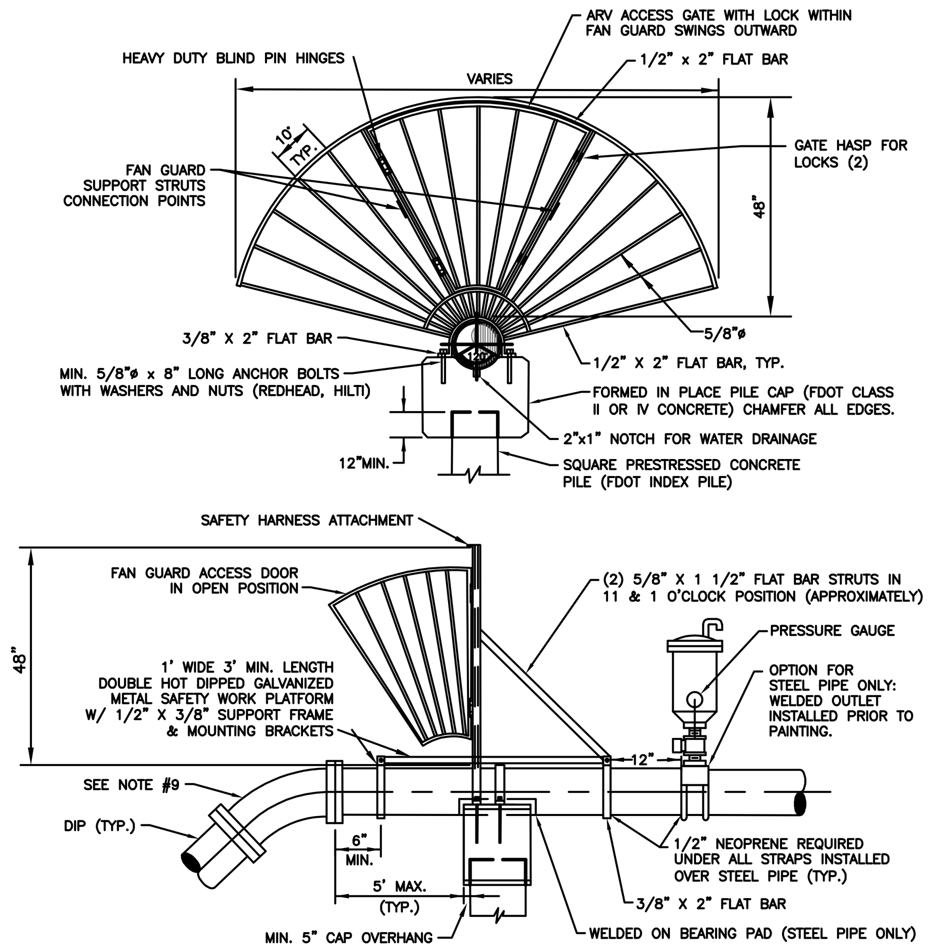

NOTES:

1. FAN GUARDS SHALL BE PLACED AT EACH END OF CANAL CROSSING.
2. HARDWARE SHALL BE PAINTED WITH COAL TAR EPOXY.
3. FANGUARD WITH HARDWARE SHALL BE FABRICATED FROM DOUBLE HOT DIPPED GALVANIZED STEEL.
4. SHOP DRAWINGS FOR FANGUARDS, CAPS, AND PILES MUST BE SUBMITTED TO PBCWUD FOR REVIEW AND APPROVAL PRIOR TO PRE-CONSTRUCTION MEETING.
5. REINFORCING STEEL SHALL CONFORM TO ASTM A-615, GRADE 60. MIN. 2" CONCRETE COVER OVER ALL STEEL.
6. SEE "TYPICAL CANAL CROSSING DETAIL" FOR ADDITIONAL REQUIREMENTS.
7. NO WELDING OF REBAR TO REBAR OR REBAR TO PILE STRANDS SHALL BE ALLOWED.
8. DESIGN DRAWINGS ARE REQUIRED.
9. LONG RADIUS WELDED ON UPPER BENDS ARE ACCEPTABLE FOR STEEL PIPE.
10. IF A PILE/CAP STEEL CONNECTION IS REQUIRED BY DESIGNING ENGINEER, MIN. (4) #8 REINFORCEMENT BARS SHALL BE DRILLED AND DOWELED (EPOXIED) MIN. 16" DEEP INTO THE PILE AND TIED WITH THE CAP STEEL.
11. ACCESS PLATFORM AND GATE REQUIRED ON ARV SIDE ONLY.

FAN GUARD/ PILE CAP DESIGN SINGLE PIPE (SINGLE PILES) 27W

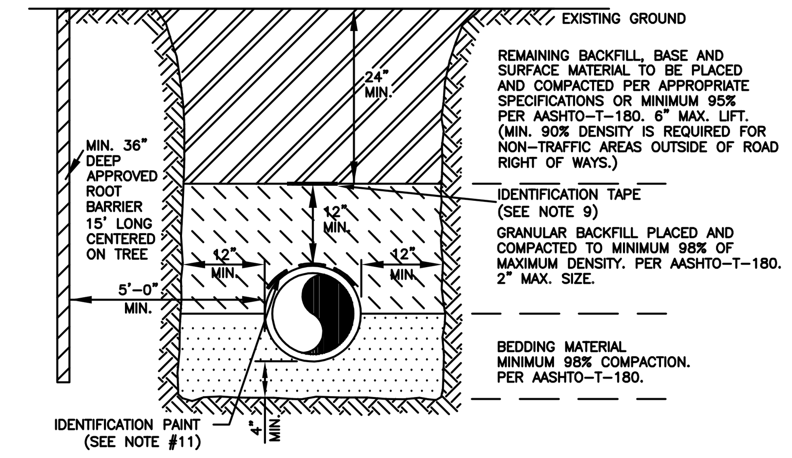

NOTES:

1. BEDDING SHALL CONSIST OF IN-SITU GRANULAR MATERIAL OR WASHED AND GRADED LIMEROCK 3/8"- 7/8" SIZING. UNSUITABLE IN-SITU MATERIALS SUCH AS MUCK, DEBRIS AND LARGER ROCKS SHALL BE REMOVED.
2. THE PIPE SHALL BE FULLY SUPPORTED FOR ITS ENTIRE LENGTH WITH APPROPRIATE COMPACTION UNDER THE PIPE HAUNCHES.
3. THE PIPE SHALL BE PLACED IN A DRY TRENCH.
4. BACKFILL SHALL BE FREE OF UNSUITABLE MATERIAL SUCH AS LARGE ROCK, MUCK AND DEBRIS.
5. DENSITY TESTS ARE REQUIRED IN 1 FOOT LIFTS ABOVE THE PIPE AT INTERVALS OF 400' MAXIMUM, MINIMUM 1 SET OF TESTS FOR EACH WASTEWATER GRAVITY MAIN RUN, OR AS DIRECTED BY THE INSPECTOR.
6. THE DEVELOPER/CONTRACTOR SHALL BE RESPONSIBLE TO COMPLY WITH ALL TRENCH SAFETY LAWS AND REGULATIONS.
7. SEE SEPARATE DETAILS FOR "PIPE INSTALLATION UNDER EXISTING PAVEMENT – OPEN CUT."
8. THE AFFECTED AREA SHALL BE RESTORED TO EQUAL OR BETTER CONDITION OR AS SPECIFIED IN PERMIT/CONTRACT DOCUMENTS.
9. APPROVED MAGNETIC TAPE IS REQUIRED FOR: ALL POTABLE WATER MAINS, FORCE MAINS AND RECLAIMED WATER MAINS. THE TAPE SHALL BE INSTALLED MAX. 24" BELOW FINISHED GRADE.
10. ROOT BARRIER IS REQUIRED FOR APPROVED TREE INSTALLATION CLOSER THAN 10 FEET FROM UTILITY FACILITIES.
11. CONTINUOUS 4" WIDE PAINT STRIPING IS REQUIRED FOR DIP/PCCP WATER MAINS (BLUE), DIP SEWER MAINS (GREEN), AND DIP RECLAIMED WATER MAINS (PURPLE).
12. PERMANENT ABOVE GROUND UTILITY MARKER SHALL BE INSTALLED IF REQUIRED BY PROPERTY OWNER GRANTING THE PIPE INSTALLATION PERMIT.
13. FOR PIPE INSTALLATIONS IN ROAD RIGHTS-OF-WAY, ROAD OWNER'S PERMIT SPECIFICATIONS SHALL APPLY.

TYPICAL TRENCH DETAIL/ ROOT BARRIER INSTALLATION DETAIL 23W

CONSTRUCTION PROCEDURES

THE BACKFILL FOR THE FIRST AND SECOND STAGES SHALL BE PLACED IN 6" LIFTS. (COMPACTED THICKNESS) AND SHALL BE COMPACTED TO 100% OF MAXIMUM DENSITY AS DETERMINED BY AASHTO T-99.

STAGE 1:

THE CONTRACTOR SHALL PROVIDE ADEQUATE COMPACTED FILL BENEATH THE HAUNCHES OF THE PIPE, USING MECHANICAL TAMPS SUITABLE FOR THIS PURPOSE. THIS COMPACTION APPLIES TO THE MATERIAL PLACED BENEATH THE HAUNCHES OF THE PIPE AND ABOVE ANY BEDDING REQUIRED.

STAGE 2:

THE CONTRACTOR SHALL OBTAIN A WELL-COMPACTED BED AND FILL ALONG THE SIDES OF THE PIPE AND TO A POINT INDICATING THE TOP OF SUB-GRADE MATERIAL.

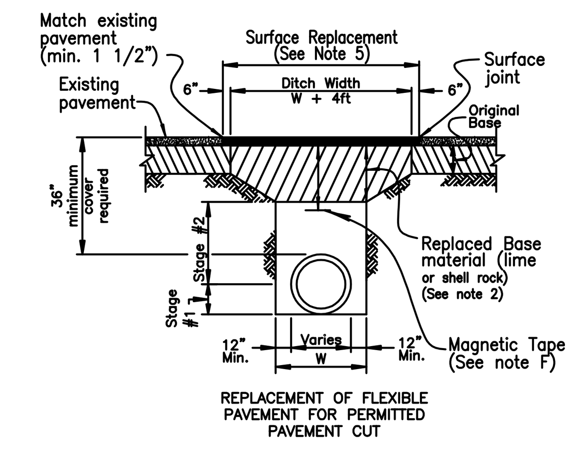

REPLACEMENT OF FLEXIBLE PAVEMENT FOR PERMITTED PAVEMENT CUT

CONSTRUCTION NOTES

1) BEDDING SHALL CONSIST OF IN-SITU GRANULAR MATERIAL OR WASHED AND GRADED LIMEROCK 3/8" – 7/8" SIZING WITH EQUAL OR GREATER STRUCTURAL ADEQUACY AS EXISTING. UNSUITABLE IN-SITU MATERIALS SUCH AS MUCK, DEBRIS AND LARGER ROCKS SHALL BE REMOVED.
2) REPLACED BASE MATERIAL (PER LAND DEVELOPMENT DESIGN STANDARDS) OVER DITCH SHALL BE TWICE THE THICKNESS OF THE ORIGINAL BASE OR 12" MINIMUM, WHICHEVER IS GREATER.
3) ASPHALT CONCRETE PAVEMENT JOINTS SHALL BE MECHANICALLY SAWED AND BUTT-JOINTED.
4) BASE MATERIAL SHALL BE PLACED IN TWO OR THREE LAYERS (6" MAX. PER LAYER) AND EACH LAYER THOROUGHLY ROLLED OR TAMPED TO THE SPECIFIED DENSITY.
5) SURFACE MATERIAL WILL BE CONSISTENT WITH THE EXISTING SURFACE OR 1 1/2" SI ASPHALTIC CONCRETE WITH RC-70 PRIME COAT AT 0.10 GAL/SQ. YD.
6) PIPE SHALL BE PLACED IN A DRY TRENCH.

GENERAL NOTES

A) ALL ROADWAY REPAIR WORK SHALL BE PERFORMED IN CONFORMANCE WITH APPLICABLE FDOT STANDARD SPECIFICATIONS FOR ROAD AND BRIDGE CONSTRUCTION AND COUNTY PPM# EL-0-3606.
B) DENSITY TESTS SHALL BE TAKEN IN 1 FT LIFTS ABOVE THE PIPE AT INTERVALS OF 400 FT MAXIMUM (1 SET MINIMUM) OR AS DIRECTED BY THE CONSTRUCTION COORDINATION DIVISION. RESULTS SHALL BE SUBMITTED TO CONSTRUCTION COORDINATION DIVISION AS PART OF THEIR FIELD REVIEW.
C) ENGINEER-OF-RECORD SHALL PROVIDE FULL-TIME INSPECTION DURING THE ENTIRETY OF THE OPEN-CUT OPERATION, BEGINNING WITH THE EXCAVATION AND CONTINUING THROUGH THE COMPLETION OF THE PAVING.
D) IF THE PAVEMENT IS NOT COMPLETELY RESTORED IMMEDIATELY FOLLOWING THE OPEN CUT, A SMOOTH TEMPORARY PATCH (MINIMUM 1.25" ASPHALT) SHALL BE INSTALLED, PROPERLY MATCHING THE EXISTING GRADING OF THE ROADWAY. THE TEMPORARY PATCH SHALL BE ALLOWED TO REMAIN IN PLACE AND BE MAINTAINED FOR A PERIOD NO LONGER THAN 45 DAYS. THE COUNTY RETAINS THE RIGHT TO USE POSTED SURETY TO COMPLETE ANY RESTORATION WORK THAT HAS NOT BEEN COMPLETED IN THE 45 DAYS PERIOD. ALTERNATIVE TEMPORARY TRENCH PROTECTION (STEEL PLATES OR OTHERS) MAY BE APPROVED BY THE CONSTRUCTION COORDINATION DIVISION.
E) FOR THE FINAL RESTORATION, THE ROAD SHALL BE MILLED AND RESURFACED WITH 1-1/2" (ONE AND A HALF INCH) OF SIII OR SI ASPHALT SURFACE COURSE FOR A FULL LANE WIDTH ENCROACHED BY THE TRENCH.
F) APPROVED MAGNETIC TAPE IS REQUIRED FOR ALL MAIN PRESSURE PIPES AND CONDUIT IN THE COUNTY'S RIGHT-OF-WAY. INSTALL TAPE 24" BELOW FINISHED GRADE.
G) CONTINUOUS 4" WIDE PAINT STRIPING IS REQUIRED FOR DIP/PCCP WATER MAINS (BLUE), DIP SANITARY MAINS (GREEN), DIP RECLAIMED WATER MAINS (PURPLE), GAS MAINS (YELLOW), OR AS REQUIRED BY THE APWA.

OPEN CUT PIPE INSTALLATION NON-THOROUGHFARE ROAD 24W

CONSTRUCTION PROCEDURES

THE BACKFILL FOR THE FIRST AND SECOND STAGES SHALL BE PLACED IN 6" LIFTS (COMPACTED THICKNESS) AND SHALL BE COMPACTED TO 100% OF MAXIMUM DENSITY AS DETERMINED BY AASHTO T-99.

STAGE 1:

THE CONTRACTOR SHALL PROVIDE ADEQUATE COMPACTED FILL BENEATH THE HAUNCHES OF THE PIPE, USING MECHANICAL TAMPS SUITABLE FOR THIS PURPOSE. THIS COMPACTION APPLIES TO THE MATERIAL PLACED BENEATH THE HAUNCHES OF THE PIPE AND ABOVE ANY BEDDING REQUIRED.

STAGE 2:

THE CONTRACTOR SHALL OBTAIN A WELL-COMPACTED BED AND FILL ALONG THE SIDES OF THE PIPE AND TO A POINT INDICATING THE TOP OF SUB-GRADE MATERIAL.

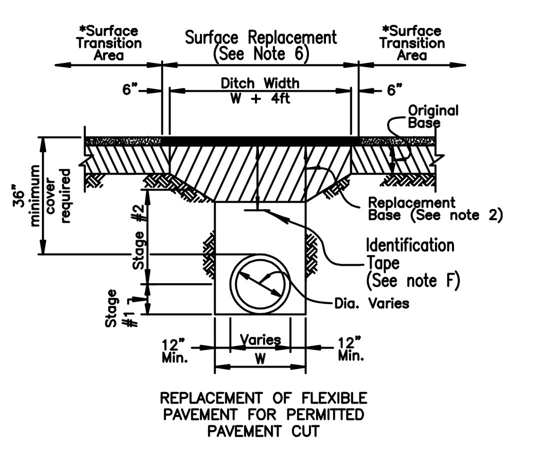

REPLACEMENT OF FLEXIBLE PAVEMENT FOR PERMITTED PAVEMENT CUT

CONSTRUCTION NOTES

1) BEDDING SHALL CONSIST OF IN-SITU GRANULAR MATERIAL OR WASHED AND GRADED LIMEROCK 3/8" – 7/8" SIZING WITH EQUAL OR GREATER STRUCTURAL ADEQUACY AS EXISTING. UNSUITABLE IN-SITU MATERIALS SUCH AS MUCK, DEBRIS AND LARGER ROCKS SHALL BE REMOVED.
2) REPLACED BASE MATERIAL OVER DITCH SHALL BE 16" MINIMUM FOR THOROUGHFARE PLAN ROADS.
3) ASPHALT CONCRETE PAVEMENT JOINTS SHALL BE MECHANICALLY SAWED AND BUTT-JOINTED.
4) BASE MATERIAL (PER ROADWAY PRODUCTION DESIGN STANDARDS) SHALL BE PLACED IN TWO OR THREE LAYERS (6" MAX. PER LAYER) AND EACH LAYER THOROUGHLY ROLLED OR TAMPED TO THE SPECIFIED DENSITY.
5) * SURFACE TRANSITION AREA (SEE PLANS FOR LOCATION). OVERLAY OR MILL/RESURFACE FOR A DISTANCE OF 50'ON BOTH SIDES OF THE OPEN CUT AND FOR A FULL LANE WIDTH.
6) 1" SIII ASPHALTIC CONCRETE OVER 1 1/2" SI ASPHALTIC CONCRETE WITH RC-70 PRIME COAT AT 0.10 GAL/SQ. YD.
7) PIPE SHALL BE PLACED IN A DRY TRENCH.

GENERAL NOTES

A) ALL ROADWAY REPAIR WORK SHALL BE PERFORMED IN CONFORMANCE WITH APPLICABLE FDOT STANDARD SPECIFICATIONS FOR ROAD AND BRIDGE CONSTRUCTION AND COUNTY PPM# EL-0-3605.
B) DENSITY TESTS SHALL BE TAKEN IN 1 FT LIFTS ABOVE THE PIPE AT INTERVALS OF 400 FT MAXIMUM (1 SET MINIMUM) OR AS DIRECTED BY THE CONSTRUCTION COORDINATION DIVISION. RESULTS SHALL BE SUBMITTED TO CONSTRUCTION COORDINATION DIVISION AS PART OF THEIR FIELD REVIEW.
C) ENGINEER-OF-RECORD WILL PROVIDE FULL-TIME INSPECTION DURING THE ENTIRETY OF THE OPEN-CUT OPERATION, BEGINNING WITH THE EXCAVATION AND CONTINUING THROUGH THE COMPLETION OF THE PAVING.
D) IF THE PAVEMENT IS NOT COMPLETELY RESTORED IMMEDIATELY FOLLOWING THE OPEN CUT, A SMOOTH TEMPORARY PATCH (MINIMUM 1.25" ASPHALT) SHALL BE INSTALLED, PROPERLY MATCHING THE EXISTING GRADING OF THE ROADWAY. THE TEMPORARY PATCH SHALL BE ALLOWED TO REMAIN IN PLACE AND BE MAINTAINED FOR A PERIOD NO LONGER THAN 45 DAYS. THE COUNTY RETAINS THE RIGHT TO USE POSTED SURETY TO COMPLETE ANY RESTORATION WORK THAT HAS NOT BEEN COMPLETED IN THE 45 DAYS PERIOD. ALTERNATIVE TEMPORARY TRENCH PROTECTION (STEEL PLATES OR OTHERS) MAY BE APPROVED BY THE CONSTRUCTION COORDINATION DIVISION.
E) THE FINAL RESTORATION, THE ROAD SHALL BE MILLED/RESURFACED FOR A FULL LANE WIDTH OF THE TRAVEL LANES ENCROACHED BY THE TRENCH AREA, INCLUDING A TRANSITION AREA OF 50 FT ON EACH SIDE OF THE TRENCH, THE PAVEMENT SHALL BE MILLED AND RESURFACED PER CONSTRUCTION NOTE 6.
F) APPROVED MAGNETIC TAPE IS REQUIRED FOR ALL MAIN PRESSURE PIPES AND CONDUIT IN THE COUNTY'S RIGHT-OF-WAY. INSTALL TAPE 24" BELOW FINISHED GRADE.
G) CONTINUOUS 4" WIDE PAINT STRIPING IS REQUIRED FOR DIP/PCCP WATER MAINS (BLUE), DIP SANITARY MAINS (GREEN), DIP RECLAIMED WATER MAINS (PURPLE), GAS MAINS (YELLOW), OR AS REQUIRED BY THE APWA.

OPEN CUT PIPE INSTALLATION THOROUGHFARE ROAD 25W

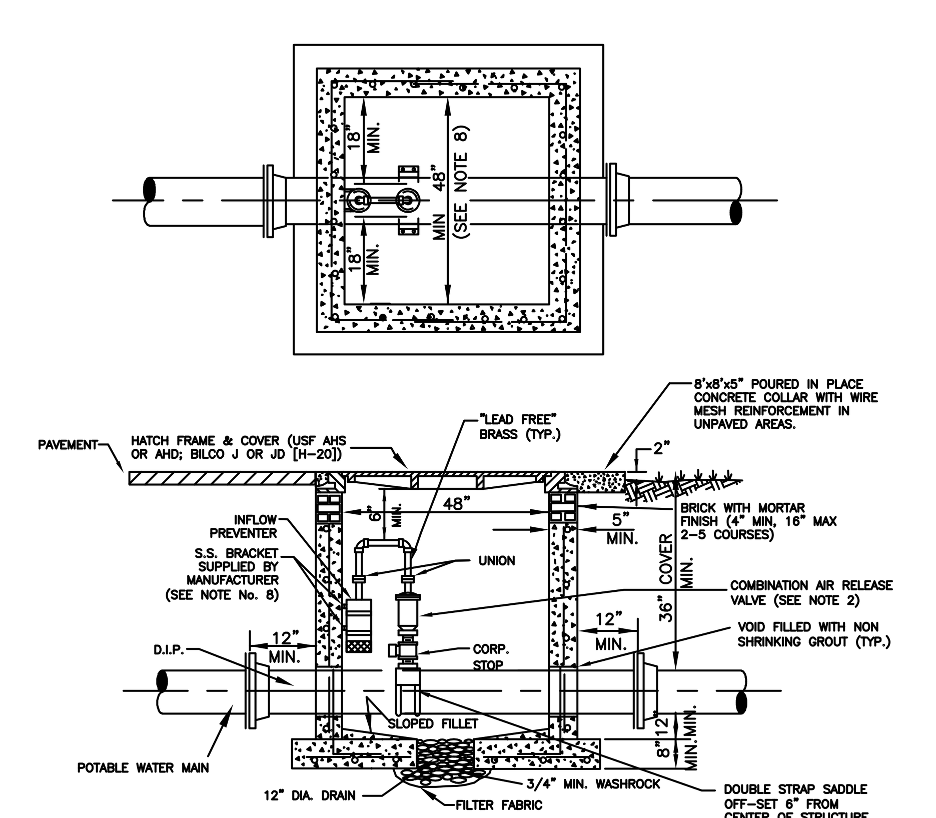

NOTES:

1. PRECAST 4000 P.S.I. TYPE II CONCRETE STRUCTURE. SHOP DRAWING IS REQUIRED TO BE APPROVED BY THE DEPARTMENT PRIOR TO VAULT CONSTRUCTION AND/OR INSTALLATION.
2. COMBINATION AIR RELEASE VALVE (ARV) SHALL BE TYPE AND SIZE APPROPRIATE FOR SERVICE INTENDED ALTHOUGH A 1" MINIMUM SIZED ARV IS REQUIRED ON POTABLE WATER MAIN INSTALLATIONS.
3. ALL OPENINGS SHALL BE SEALED WITH WATERPROOF NON-SHRINKING GROUT.
4. ALTERNATE VAULT AND COVER DESIGN MAY BE USED PROVIDED ALTERNATE VAULT AND/OR COVER SHOP DRAWINGS WERE SUBMITTED AND APPROVED BY THE DEPARTMENT PRIOR TO THE VAULT AND/OR COVER BEING INSTALLED.
5. DUCTILE IRON PIPE IS REQUIRED THROUGH THE VAULT. NO PIPE JOINTS INSIDE OR WITHIN 12" OF THE VAULT.
6. THREADED AREAS OF BRASS FITTINGS SHALL BE SPIRAL WRAPPED WITH TWO WRAPS OF TEFLON TAPE.
7. LARGER VAULTS WILL BE REQUIRED FOR PIPES LARGER THAN 12"

PIPE SIZE	MIN. VAULT SIZE
16"-24"	4'X5'
30"-42"	4'X6'

8. SHOP DRAWINGS ARE REQUIRED FOR CUSTOM MADE BRACKETS

POTABLE WATER MAIN UNDERGROUND AIR RELEASE VALVE AND VAULT IN NON-TRAFFIC AREAS OUTSIDE OF ROAD R/W ✳ 28W

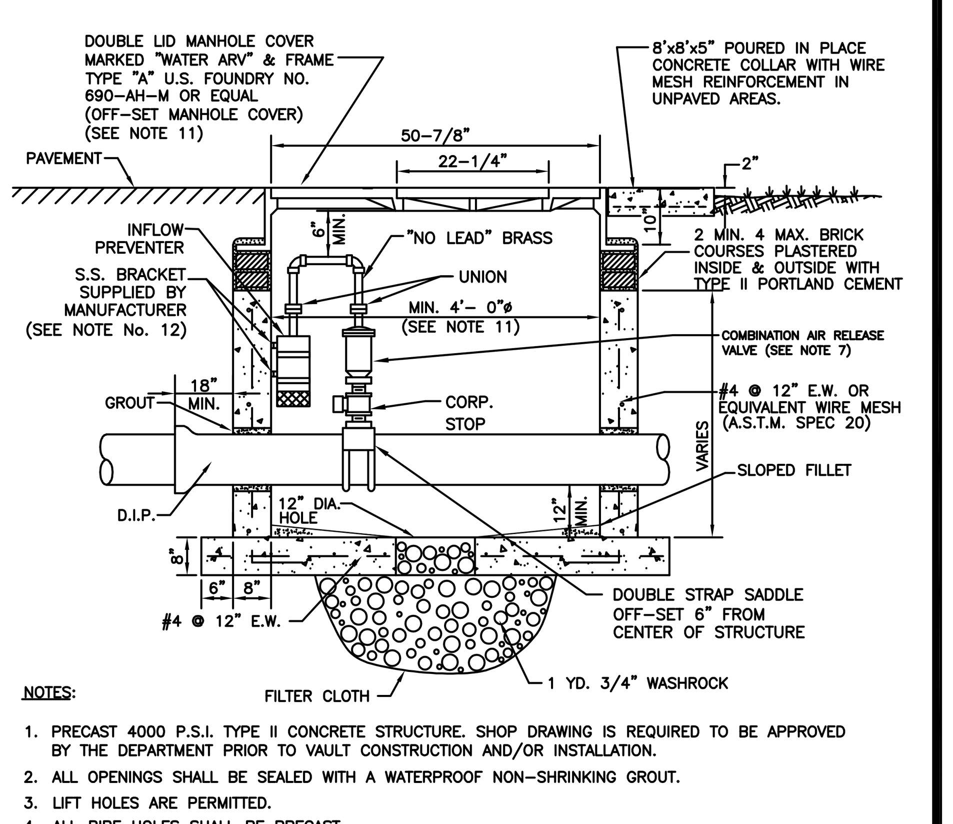

NOTES:

1. PRECAST 4000 P.S.I. TYPE II CONCRETE STRUCTURE. SHOP DRAWING IS REQUIRED TO BE APPROVED BY THE DEPARTMENT PRIOR TO VAULT CONSTRUCTION AND/OR INSTALLATION.
2. ALL OPENINGS SHALL BE SEALED WITH A WATERPROOF NON-SHRINKING GROUT.
3. LIFT HOLES ARE PERMITTED.
4. ALL PIPE HOLES SHALL BE PRECAST.
5. MANHOLE FABRICATION SHALL BE IN ACCORDANCE WITH A.S.T.M. C-478 LATEST STANDARD.
6. CONCRETE COLLAR REQUIRED WHEN MANHOLE IS OUTSIDE OF PAVEMENT, SEE DETAIL.
7. COMBINATION AIR RELEASE VALVE (ARV) SHALL BE TYPE AND SIZE APPROPRIATE FOR SERVICE INTENDED ALTHOUGH A 1" MINIMUM SIZED ARV IS REQUIRED ON POTABLE WATER MAIN INSTALLATIONS.
8. DUCTILE IRON PIPE IS REQUIRED THROUGH THE VAULT. NO PIPE JOINTS INSIDE OR WITHIN 18" OF THE MANHOLE.
9. THREADED AREAS OF BRASS FITTINGS SHALL BE SPIRAL WRAP WITH TWO WRAPS OF TEFLON TAPE.
10. POTABLE WATER MAINS 12" AND SMALLER, AN ALTERNATE VAULT AND COVER DESIGN MAY BE USED PROVIDED ALTERNATE VAULT AND/OR COVER SHOP DRAWINGS WERE SUBMITTED AND APPROVED BY THE DEPARTMENT PRIOR TO THE VAULT AND/OR COVER BEING INSTALLED.
11. LARGER MANHOLES WILL BE REQUIRED FOR PIPES LARGER THAN 12"

PIPE SIZE	MIN. MANHOLE DIAMETER
16"-24"	60"
30"-42"	72"

12. SHOP DRAWINGS ARE REQUIRED FOR CUSTOM MADE BRACKETS
13. MANHOLES IN ROADWAYS SHALL BE LOCATED OUTSIDE OF WHEEL PATHS.

POTABLE WATER MAIN AIR RELEASE MANHOLE IN PAVED AREAS AND ROAD R/W ✳ 29W

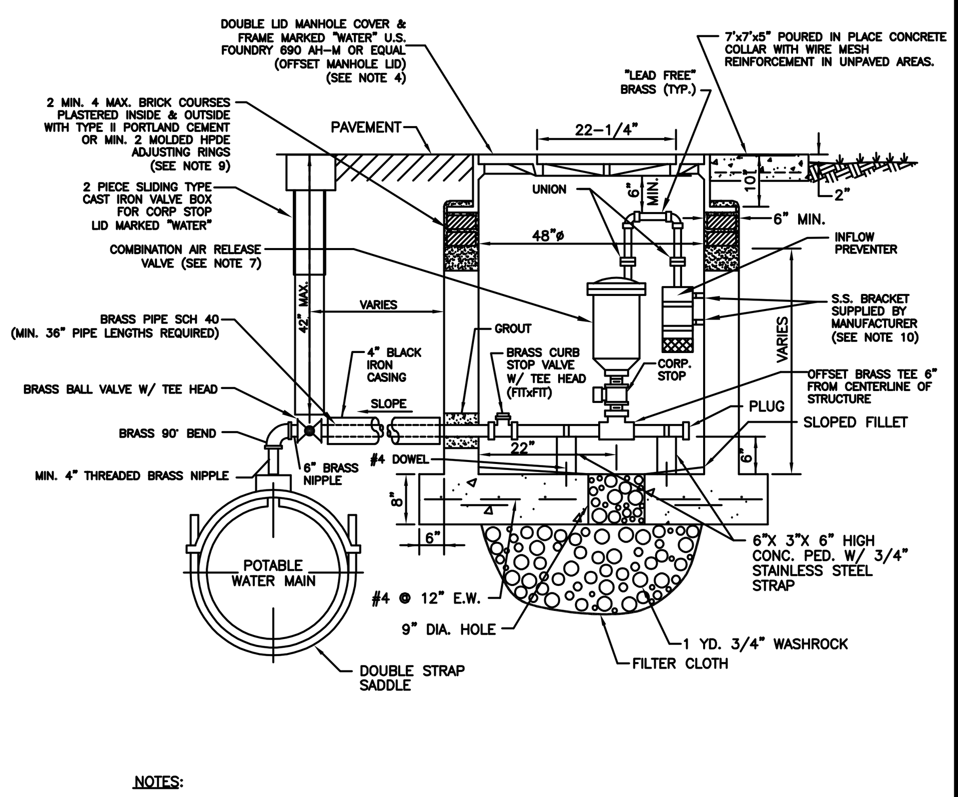

NOTES:

1. PRECAST MONOLITHIC POURED 4000 P.S.I. TYPE II CONCRETE STRUCTURE. SHOP DRAWING IS REQUIRED TO BE APPROVED BY THE DEPARTMENT PRIOR TO VAULT CONSTRUCTION AND/OR INSTALLATION.
2. ALL OPENINGS SHALL BE SEALED WITH A WATERPROOF NON-SHRINKING GROUT.
3. ALL PIPE HOLES SHALL BE PRECAST.
4. ALTERNATIVE VAULT DESIGN MAY BE USED WITH AN APPROVED 32" DIAMETER HINGED MANHOLE COVER PROVIDED ALTERNATE VAULT AND/OR COVER SHOP DRAWING WAS SUBMITTED AND APPROVED BY THE DEPARTMENT PRIOR TO THE VAULT AND/OR COVER BEING INSTALLED.
5. ARV, TAP AND PIPING TO BE TYPE AND SIZE APPROPRIATE FOR SERVICE INTENDED.
6. COMBINATION AIR RELEASE VALVE (ARV) SHALL BE TYPE AND SIZE APPROPRIATE FOR SERVICE INTENDED ALTHOUGH A 1" MINIMUM SIZED ARV IS REQUIRED ON POTABLE WATER MAIN INSTALLATIONS.
7. SHOP DRAWING IS REQUIRED FOR REVIEW AND APPROVAL.
8. THREADED AREAS OF BRASS FITTINGS AND OTHER FITTINGS SHALL BE SPIRAL WRAPPED WITH TWO WRAPS OF TEFLON TAPE.
9. IN LIEU OF BRICK WORK, APPROVED PRECAST CONCRETE ADJUSTING RINGS MAY BE USED. INSTALLATION SHALL FOLLOW MANUFACTURERS RECOMMENDATIONS.
10. SHOP DRAWINGS ARE REQUIRED FOR CUSTOM MADE BRACKETS
11. PIPE AND FITTINGS SHALL BE NO LEAD BRASS.
12. MANHOLES SHALL BE INSTALLED OUTSIDE TRAFFIC AREAS.

POTABLE WATER MAIN OFF-SET UNDERGROUND AIR RELEASE VALVE ✳ 30W

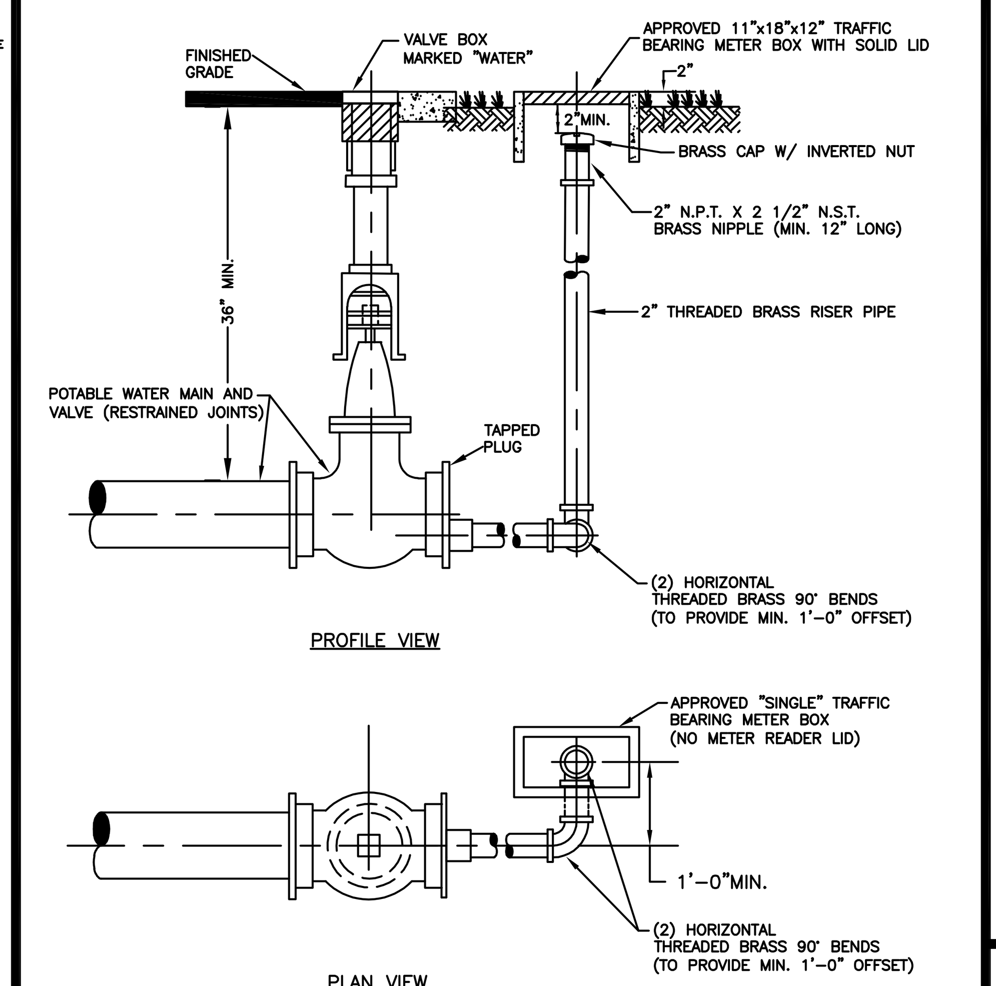

NOTES:

1. TEMPORARY DEAD END BLOWOFF ONLY ALLOWED WITH PRIOR DEPARTMENT APPROVAL.
2. BLOWOFF BOX TO BE LOCATED IN GRASS AREA, MIN. 2' FROM SIDEWALK OR PAVEMENT
3. PERMANENT DEAD ENDS REQUIRE THE INSTALLATION OF AN APPROVED AUTOMATIC FLUSHING ASSEMBLY.
4. ALL BRASS SHALL BE "LEAD FREE".

TYPICAL 2" TERMINAL BLOWOFF POTABLE WATER DISTRIBUTION MAINS ✳ 21W

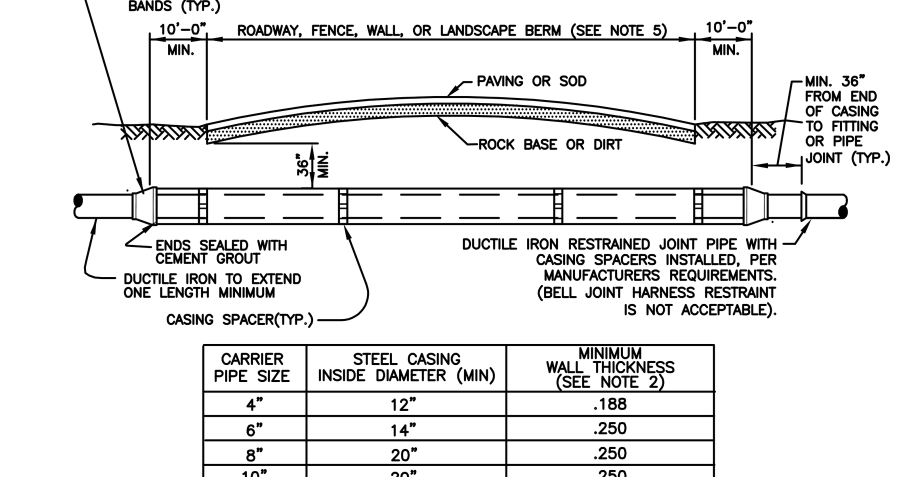

CARRIER PIPE SIZE	STEEL CASING INSIDE DIAMETER (MIN)	MINIMUM WALL THICKNESS (SEE NOTE 2)
4"	12"	.188
6"	14"	.250
8"	20"	.250
10"	20"	.250
12"	24"	.250
14"	24"	.250
16"	30"	.312
18"	30"	.312
20"	36"	.372
24"	42"	.500
30"	48"	.500
36"	54"	.625
42"	60"	.625
48"	72"	.625

NOTES:

1. A PROFILE DRAWING TO SCALE FOR EACH JACK AND BORE, DIRECTIONAL DRILL, OR DIRECT BURIED INSTALLATION IS REQUIRED TO BE APPROVED BY THE DEPARTMENT PRIOR TO INSTALLATION. IF A SPLIT CASING IS REQUIRED THEN SHOP DRAWINGS ARE REQUIRED TO BE SUBMITTED AND APPROVED BY THE DEPARTMENT PRIOR TO CONSTRUCTION AND/OR INSTALLATION.
2. THICKER WALL CASINGS AND LARGER COVER OVER CASING MAY BE REQUIRED BY THE RIGHT-OF-WAY OWNER.
3. STEEL CASING SHALL BE COATED OUTSIDE WITH COAL TAR EPOXY (MIN. 16 MILS DFT) AND BE PAINTED WITH A 4" MINIMUM WIDE CONTINUOUS STRIPE, COLOR CODED TO MATCH THE PIPE INSIDE, ALONG THE TOP AXIS OF THE CASING.
4. PIPE IN CASING SHALL BE PULLED TO FULLY ENGAGE RESTRAINT.
5. STEEL CASING IS REQUIRED FOR ALL WATER MAIN INSTALLATIONS UTILIZING JACK AND BORE CONSTRUCTION AND WHEN MAINS ARE INSTALLED UNDER FENCES, WALLS, OR LANDSCAPE BERMS. WHEN THE CASING IS INSTALLED UNDER FENCES, WALLS, OR LANDSCAPE BERMS IT SHALL BE CENTERED ON THE PREVIOUS BARRIER AND IS REQUIRED TO EXTEND 10' MINIMUM PAST BARRIER ON EACH SIDE UNLESS OTHERWISE PREVIOUSLY APPROVED BY THE DEPARTMENT.

POTABLE WATER MAIN CASING INSTALLATION DETAILS ✳ 22W

POTABLE WATER #3 STANDARD DETAILS

CONSULTANT:

IT'S THE LAW !
CALL 48 HOURS BEFORE YOU DIG
1-800-432-4770
SUNSHINE STATE ONE CALL OF FLORIDA, INC. UTILITIES NOTIFICATION CENTER

DESIGNED BY: WUD
DRAWN BY: M. BUCKNER
CHECKED BY: J. LAMMERT
APPROVED BY: WUD

Palm Beach County
Water Utilities Department
P.O.Box 16097
West Palm Beach, FL 33416-6097

PROJECT NO. 22-___

OXYGEN DEVELOPMENT

PALM BEACH COUNTY FLORIDA

PALM BEACH COUNTY
WATER UTILITIES DEPARTMENT
P.O. BOX 16097
WEST PALM BEACH, FL 33416
(561)493-6000

NO.	DATE	REVISION / REMARKS	BY
✳	JUNE 2019	GENERAL REVISION	J.L.

STD DETAILS

SHEET NUMBER 16 OF 23

SEAL

SCOTT M. GINTERT, P.E. FLORIDA P.E. #84228 Jul 21, 2022

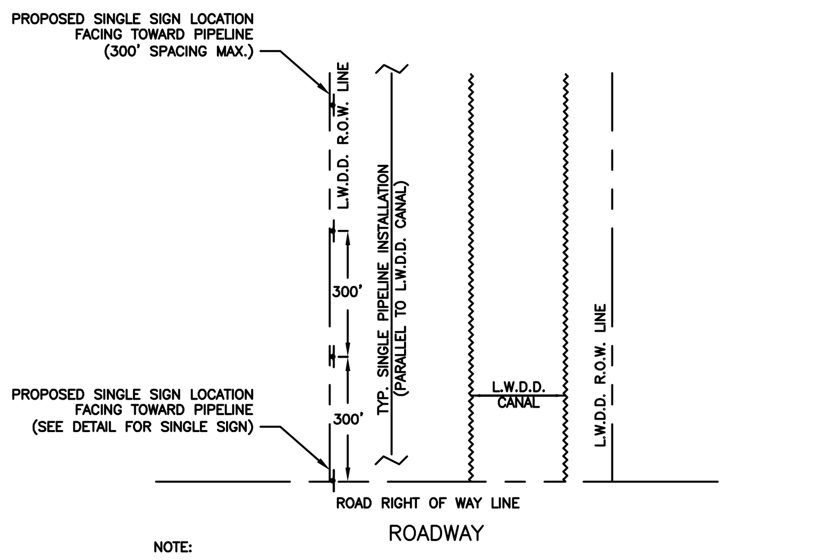

NOTE:

1. UNDERGROUND PIPELINE WARNING SIGNS ARE TO BE PLACED AT THE POINT IN WHICH THE LINE INGRESSES AND EGRESSES THE L.W.D.D. RIGHT-OF-WAY.
2. SIGN SPACING IS TO BE A MAXIMUM OF 300' ALONG THE L.W.D.D. RIGHT-OF-WAY, AS CLOSE AS POSSIBLE TO THE L.W.D.D. RIGHT-OF-WAY.

L.W.D.D. – SINGLE PIPE PARALLEL INSTALLATION UNDERGROUND PIPELINE SIGN INSTALLATION DETAIL

38W

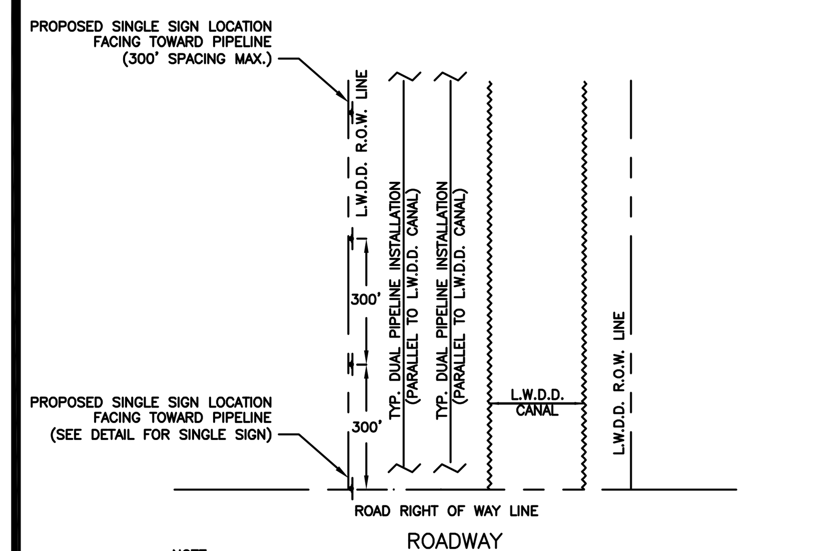

NOTE:

1. UNDERGROUND PIPELINE WARNING SIGNS ARE TO BE PLACED AT THE POINT IN WHICH THE LINE INGRESSES AND EGRESSES THE L.W.D.D. RIGHT-OF-WAY.
2. SIGN SPACING IS TO BE A MAXIMUM OF 300' ALONG THE L.W.D.D. RIGHT-OF-WAY, AS CLOSE AS POSSIBLE TO THE L.W.D.D. RIGHT-OF-WAY.

L.W.D.D. – DUAL PIPE PARALLEL INSTALLATION UNDERGROUND PIPELINE SIGN INSTALLATION DETAIL

39W

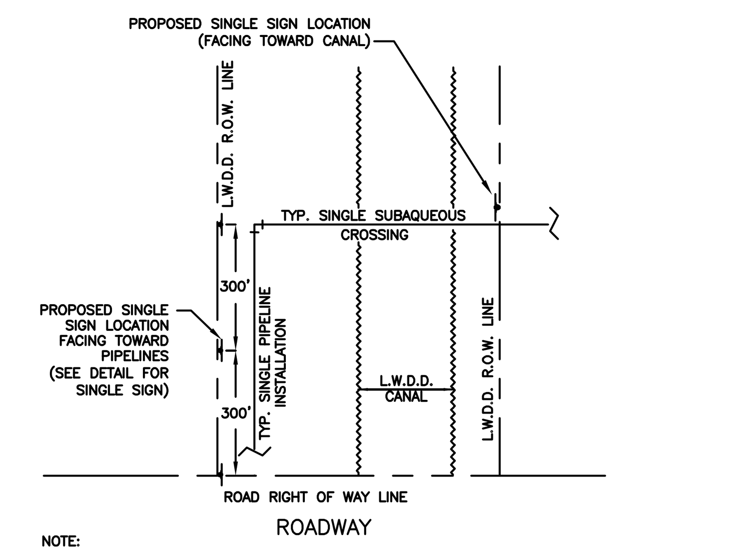

NOTE:

1. UNDERGROUND PIPELINE WARNING SIGNS ARE TO BE PLACED ON BOTH SIDES OF THE CANAL CROSSING; AT THE INSIDE EDGE OF THE RIGHT-OF-WAY.
2. SIGN POST IS NOT TO BE PLACED DIRECTLY OVER PIPELINE. OFFSET SIGN POST 5' FROM PIPELINE.

L.W.D.D. – SINGLE PIPE SUBAQUEOUS CROSSING UNDERGROUND PIPELINE SIGN INSTALLATION DETAIL

40W

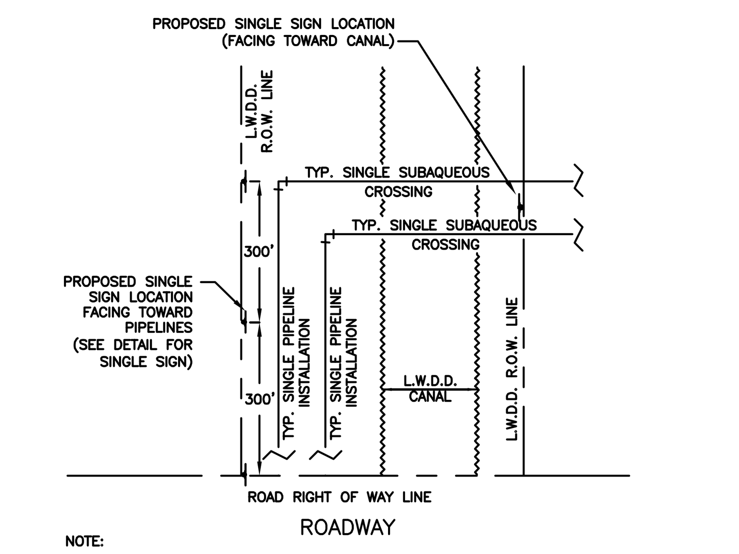

NOTE:

1. UNDERGROUND PIPELINE WARNING SIGNS ARE TO BE PLACED ON BOTH SIDES OF THE CANAL CROSSING; AT THE INSIDE EDGE OF THE RIGHT-OF-WAY.
2. SIGN POST IS NOT TO BE PLACED DIRECTLY OVER PIPELINE. OFFSET SIGN POST 5' FROM PIPELINE.

L.W.D.D. – DUAL PIPE SUBAQUEOUS CROSSING UNDERGROUND PIPELINE SIGN INSTALLATION DETAIL

41W

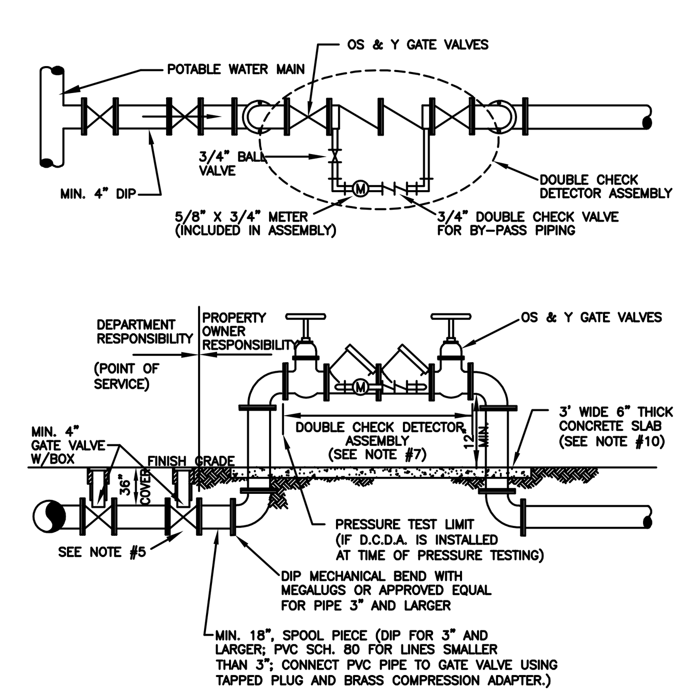

NOTES:

1. ALL PIPE AND FITTINGS UP TO THE D.C.D.A. SHALL BE DUCTILE IRON CEMENT LINED.
2. THE INITIAL TEST OF THE BACKFLOW PREVENTION ASSEMBLY SHALL BE PERFORMED BY THE DEPARTMENT PRIOR TO SERVICE ACTIVATION.
3. THE DOUBLE CHECK DETECTOR ASSEMBLY SHALL BE APPROVED BY THE UNIVERSITY OF SOUTHERN CALIFORNIA (U.S.C.) OR THE A.S.S.E. (WITH ONE YEAR FIELD TESTING).
4. THE PROPERTY OWNER SHALL BE RESPONSIBLE FOR THE PROPER OPERATION, MAINTENANCE AND SUBSEQUENT TESTING OF THE DOUBLE CHECK DETECTOR ASSEMBLY BY A CERTIFIED BACKFLOW TECHNICIAN .
5. WHEN FIRE LINE LENGTH IS OVER ONE PIPE LENGTH, LINE SHALL BE TERMINATED WITH A GATE VALVE (=POINT OF SERVICE). NO PIPE JOINTS / CONNECTIONS ARE PERMITTED BETWEEN POINT OF SERVICE AND VERTICAL 90° BEND
6. THE DESIGN SHALL MINIMIZE ANY POTENTIAL FOR WATER MAIN WITH NO FLOW. A FIRE HYDRANT LOCATED NEAR THE DOUBLE CHECK DETECTOR ASSEMBLY MAY BE REQUIRED FOR LONG, DEAD ENDING DEDICATED FIRE LINES.
7. AN APPROVED REDUCED PRESSURE PRINCIPLE DETECTOR ASSEMBLY SHALL BE REQUIRED FOR ALL FIRE SYSTEMS WITH STORAGE TANKS AND/OR AUXILIARY WATER SUPPLY.
8. TAMPER SWITCHES MAY BE REQUIRED BY THE FIRE MARSHALL.
9. PIPE MATERIAL ON THE CUSTOMER SIDE OF POINT OF SERVICE SHALL COMPLY WITH FIRE MARSHALL REQUIREMENTS
10. 3' WIDE 6" THICK CONCRETE SLAB IS RECOMMENDED FOR ASSEMBLY SMALLER THAN 4".

DOUBLE CHECK DETECTOR ASSEMBLY

32W

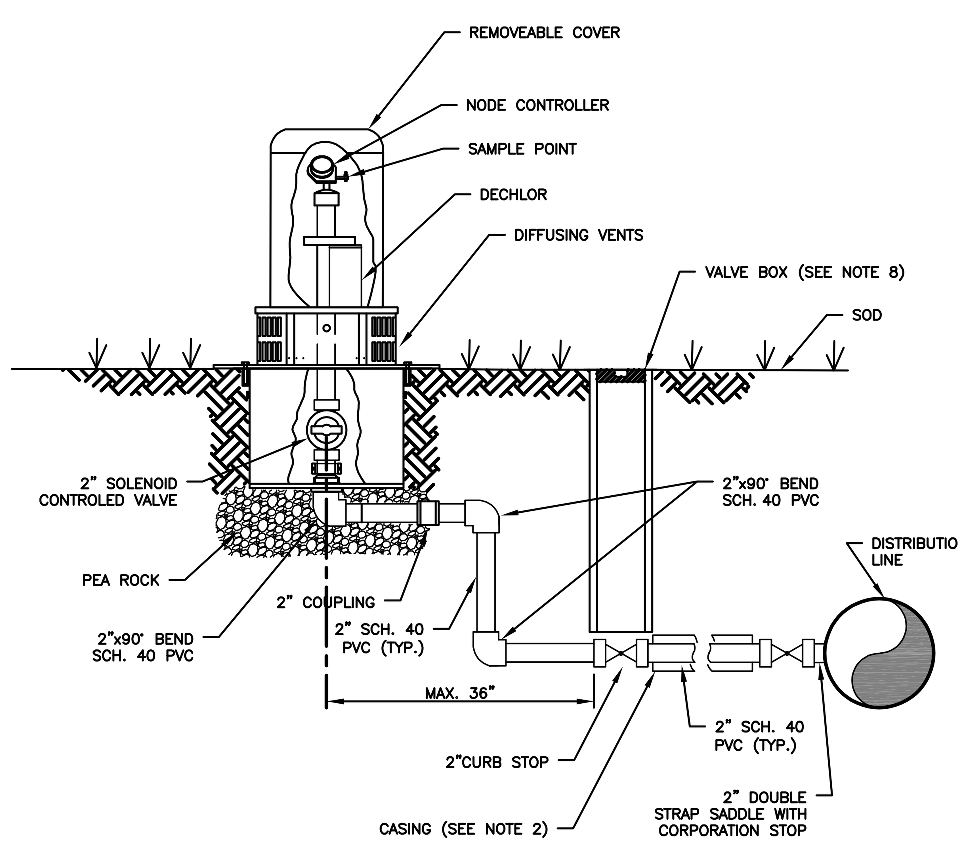

NOTES:

1. AUTOMATIC FLUSHING ASSEMBLY TO BE INSTALLED PER MANUFACTURER'S REQUIREMENTS.
2. FOR INSTALLATION OF SERVICES UNDER DRIVEWAYS AND ROADWAYS, USE MIN. 4" DIAMETER BLACK IRON, PVC SCH 40, OR HDPE SDR 9 CASING. CASING SHALL EXTEND MIN. 24" BEYOND EDGE OF PAVEMENT. CASING TO BE SEALED WITH CEMENT. CASING SHALL BE COLOR-CODED BLACK, WHITE, BLUE, OR BLUE STRIPED.
3. AUTOMATIC FLUSHING ASSEMBLY TO BE INSTALLED AS CLOSE AS POSSIBLE TO THE WATER MAIN WITHIN AN UTILITY EASEMENT OR ROAD RIGHT-OF-WAY WITH PRIOR DEPARTMENT APPROVAL. IF AUTOMATIC FLUSHING ASSEMBLY HOUSING IS INSTALLED IN ROAD RIGHT-OF-WAY IT SHALL NOT INTERFERE WITH CLEAR ZONE REQUIREMENTS AS SPECIFIED BY ROAD OWNER.
4. BEDDING (MIN. 4") AND COVER (MIN. 4") OVER SERVICE LINE OR CASING SHALL CONSIST OF FINE GRANULAR MATERIAL. UNSUITABLE IN-SITU MATERIALS SUCH AS MUCK, DEBRIS AND LARGER ROCKS SHALL BE REMOVED WITH 2" MAXIMUM SIZE.
5. ALL HARDWARE (I.E. BOLTS, ETC.) REQUIRED FOR ASSEMBLY INSTALLATION SHALL BE 304 STAINLESS STEEL.
6. THREADED AREAS OF CORPORATION STOP AND OTHER FITTINGS SHALL BE SPIRAL WRAPPED WITH TWO (2) WRAPS OF TEFLON TAPE. ALL BRASS SHALL BE "LEAD FREE".
7. A 4" THICK COMPACTED 3/4" ROCK BASE IS REQUIRED. THE BASE SHALL EXTEND MINIMUM 12" BEYOND AUTOMATIC FLUSHING ASSEMBLY PAD PERIMETER.
8. WHEN VALVE BOX IS LOCATED IN GRASS A CONCRETE COLLAR IS REQUIRED PER DEPARTMENT STANDARDS.

AUTOMATIC FLUSHING ASSEMBLY (TYPE A) *

43W

IN-LINE CONNECTION

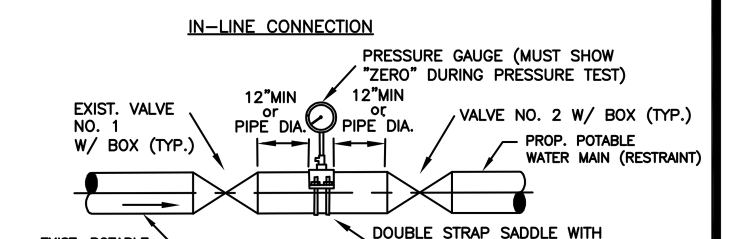

TAP/ TEE CONNECTION

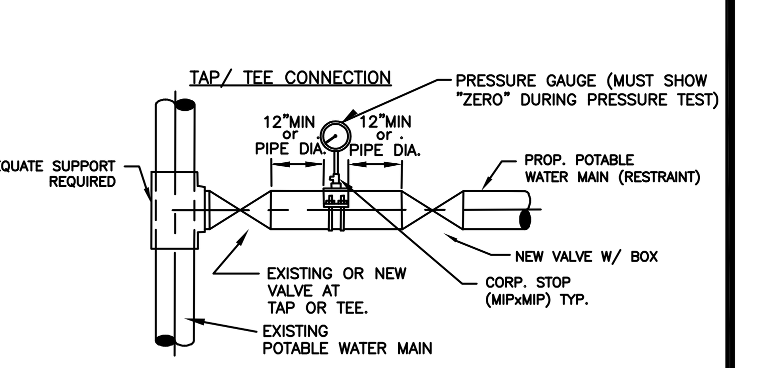

NOTES:

1. THE "ALTERNATIVE" PROCEDURE MUST BE APPROVED BY WUD IN ADVANCE. IT ALLOWS THE NEW PIPE TO BE PRESSURE TESTED PRIOR TO BACTERIOLOGICAL TESTING.
2. BOTH VALVES SHALL BE KEPT CLOSED EXCEPT FOR FILLING AND FLUSHING.
3. WUD SHALL BE NOTIFIED BEFORE FILLING AND FLUSHING.
4. PRESSURE TEST PUMP MAY BE CONNECTED TO SERVICE LINE, FIRE HYDRANT OR BLOWOFF IN THE TESTED WATER MAIN. NO EXTRA TAPS ARE PERMITTED UNLESS UNAVOIDABLE.
5. GAUGE AND RISER TO BE REMOVED AFTER PRESSURE TEST, HOLE TO BE PLUGGED AT SADDLE WITH BRASS PLUG. A BRASS CAP IS REQUIRED.
6. THREAD AREAS OF CORPORATION STOP SHALL BE SPIRAL WRAPPED WITH TWO WRAPS OF TEFLON TAPE.
7. ENSURE PROPER RESTRAINT OF EXISTING VALVE(S) AND PIPE PRIOR TO NEW CONNECTION.
8. SEE ALSO DETAIL FOR "STANDARD POTABLE WATER MAIN TIE-IN PROCEDURE"
9. RECORD DRAWINGS TO SHOW DATA FOR ALL TEST TAPS.
10. ALL BRASS SHALL BE "LEAD FREE".

ALTERNATIVE WATER MAIN TIE-IN

42W

DEFINITIONS — GENERAL NOTES

1. DEPARTMENT – THE PALM BEACH COUNTY WATER UTILITIES DEPARTMENT.
2. CONTRACTOR – UTILITY CONTRACTOR AND ALL UTILITY SUBCONTRACTORS.
3. ENGINEER – ENGINEER RESPONSIBLE FOR INSPECTION AND CERTIFICATION.

PROCEDURE

1. A PRE-CONSTRUCTION MEETING IS TO BE HELD PRIOR TO DELIVERY OF MATERIALS AND INITIATION OF ANY POTABLE WATER, RECLAIMED WATER AND/OR WASTEWATER SYSTEM CONSTRUCTION. THE MEETING SHALL BE ATTENDED BY THE DEPARTMENT, CONTRACTOR, ENGINEER AND OTHER INTERESTED PARTIES.
2. ANY REVISIONS TO THE APPROVED PLANS SHALL BE CALLED TO THE ATTENTION OF THE DEPARTMENT PRIOR TO THE PRE-CONSTRUCTION MEETING. REVISED PLANS MUST BE APPROVED PRIOR TO THE MEETING.
3. FIVE (5) COPIES OF THE CURRENT APPROVED MATERIAL LIST AND ALL NECESSARY SHOP DRAWINGS SHALL BE SUBMITTED FOR APPROVAL PRIOR TO SCHEDULING OF THE PRE-CONSTRUCTION MEETING.
4. ALL APPLICABLE PERMITS MUST BE OBTAINED PRIOR TO PRECONSTRUCTION MEETING. (DOT, HEALTH DEPARTMENT, COUNTY ENGINEER, ETC.).
5. THE CONTRACTOR SHALL MAINTAIN A CURRENT APPROVED SET OF CONSTRUCTION PLANS ON JOB SITE.
6. ALL MATERIALS SUPPLIED SHALL CONFORM TO PRODUCT LIST AND SHOP DRAWINGS AS APPROVED PRIOR TO CONSTRUCTION. SUBSTITUTE MATERIALS SHALL NOT BE APPROVED AFTER DELIVERY TO THE JOB SITE. ALL REQUESTS FOR MATERIAL SUBSTITUTION SHALL BE APPROVED PRIOR TO DELIVERY OF THESE MATERIALS TO THE JOB SITE.
7. THE LOCATIONS OF EXISTING UTILITIES SHOWN ON THE APPROVED PLANS ARE TO BE VERIFIED IN THE FIELD BY THE CONTRACTOR. APPROVAL OF DEVELOPMENT PLANS BY THE DEPARTMENT IN NO WAY IMPLIES VERIFICATION OF THE ACCURACY OF THOSE PLANS OR FEATURES DEPICTED THEREON. ANY DISCREPANCY IN OR VARIATION FROM THE APPROVED PLANS IS TO BE BROUGHT TO THE ATTENTION OF THE DEPARTMENT BY THE ENGINEER AND CONTRACTOR. THE CONTRACTOR SHALL CONFIRM AND INSTALL (IF NECESSARY) ADEQUATE MECHANICAL PIPE / JOINT RESTRAINT ON EXISTING PIPES PRIOR TO CONNECTION.
8. THE CONTRACTOR SHALL BE RESPONSIBLE AT ALL TIMES THROUGHOUT THE DURATION OF CONSTRUCTION FOR THE PROTECTION OF EXISTING AND NEWLY INSTALLED UTILITIES FROM DAMAGE OR DISRUPTION OF SERVICE. THE CONTRACTOR SHALL BE RESPONSIBLE FOR TAKING SUCH MEASURES AS NECESSARY TO PROTECT THE HEALTH, SAFETY AND WELFARE OF THOSE PERSONS HAVING ACCESS TO THE WORK SITE.
9. THE CONTRACTOR SHALL BE RESPONSIBLE FOR OBTAINING LOCATIONS FROM ALL OTHER UTILITY FACILITIES.
10. THE CONTRACTOR OR ENGINEER SHALL SCHEDULE INSPECTIONS AND TESTS A MINIMUM OF 24-48 HOURS IN ADVANCE.
11. NO CONNECTION TO OR ANY OTHER CONSTRUCTION SHALL BE PERFORMED ON AN EXISTING DEPARTMENT OWNED OR MAINTAINED MAIN OR STRUCTURE WITHOUT THE PRESENCE OF A DEPARTMENT INSPECTOR.
12. FACILITIES PROPOSED HEREIN SHALL BE CONSTRUCTED IN ACCORDANCE WITH THE APPROVED PLANS AND THE DEPARTMENT'S MINIMUM STANDARDS. CONFLICTS BETWEEN THE PRECEDING DOCUMENTS SHOULD BE CALLED TO THE ATTENTION OF THE DEPARTMENT FOR RESOLUTION. DEVIATIONS FROM THE APPROVED PLANS MUST BE APPROVED IN ADVANCE BY THE DEPARTMENT.
13. UPON COMPLETION OF CONSTRUCTION, A FINAL INSPECTION SHALL VERIFY PROPER ADHERENCE TO ALL FACETS OF THE PLANS AND SPECIFICATIONS.

PRESSURE PIPE NOTES

1. THERE SHALL BE 36" MINIMUM COVER FROM FINISHED GRADE TO TOP OF PIPE.
2. DUCTILE IRON PIPE (DIP) THICKNESS SHALL CONFORM TO THE DEPARTMENT'S APPROVED MATERIAL LIST. POTABLE WATER AND RECLAIMED WATER MAINS DIP SHALL BE CEMENT LINED. FORCE MAIN DIP SHALL BE CERAMIC EPOXY LINED.
3. PVC PRESSURE PIPE SHALL BE C-900, SDR-18, 150 PSI.
4. ALL FITTINGS SHALL BE DUCTILE IRON WITH MECHANICAL JOINTS AND CEMENT OR APPROVED EPOXY LINING.
5. POTABLE WATER, RECLAIMED WATER AND WASTEWATER FORCE MAIN VALVES 10 INCHES AND SMALLER SHALL BE RESILIENT SEAT GATE VALVES. TWELVE-INCH (12") OR LARGER FORCE MAIN VALVES SHALL BE RESILIENT SEAT GATE VALVES OR ECCENTRIC PLUG VALVES (IF APPROVED IN ADVANCE BY DEPARTMENT). POTABLE WATER AND RECLAIMED WATER MAIN VALVES LARGER THAN 10 INCHES SHALL BE BUTTERFLY VALVES.
6. ALL TRENCHING, PIPE-LAYING, BACKFILL, PRESSURE TESTING, AND DISINFECTION MUST COMPLY WITH ALL APPLICABLE FEDERAL, STATE, COUNTY AND HEALTH DEPARTMENT STANDARDS AND REGULATIONS.

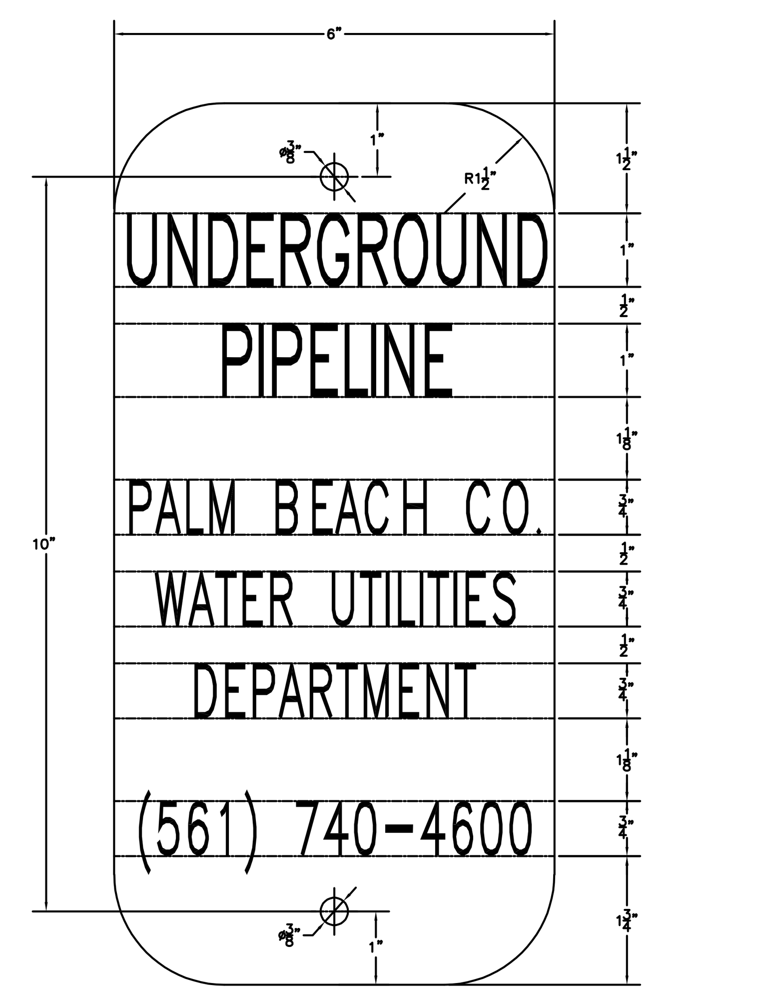

NOTE:

SIGN SHALL BE 6" WIDE X 12" LONG, ALUMINUM (0.080 GA.). SIGN COLOR IS WHITE WITH BLACK LETTERING. ROUNDED CORNERS (1.5" RAD.), 2 HOLES (3/8" DIAM.), 10" O.C.

UNDERGROUND PIPELINE SIGN DETAIL

35W

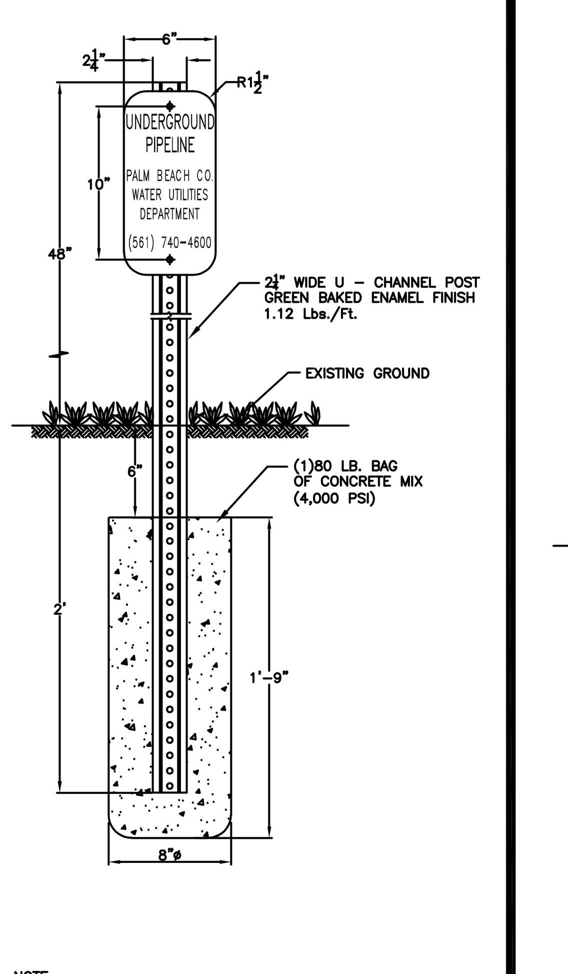

NOTE:

SIGNS SHALL BE 6" WIDE X 12" LONG, ALUMINUM (0.080 GA.). SIGN COLOR IS WHITE WITH BLACK LETTERING. ROUNDED CORNERS (1.5" RAD.), 2 HOLES (3/8" DIAM.), 10" O.C.

SINGLE UNDERGROUND PIPELINE SIGN DETAIL

36W

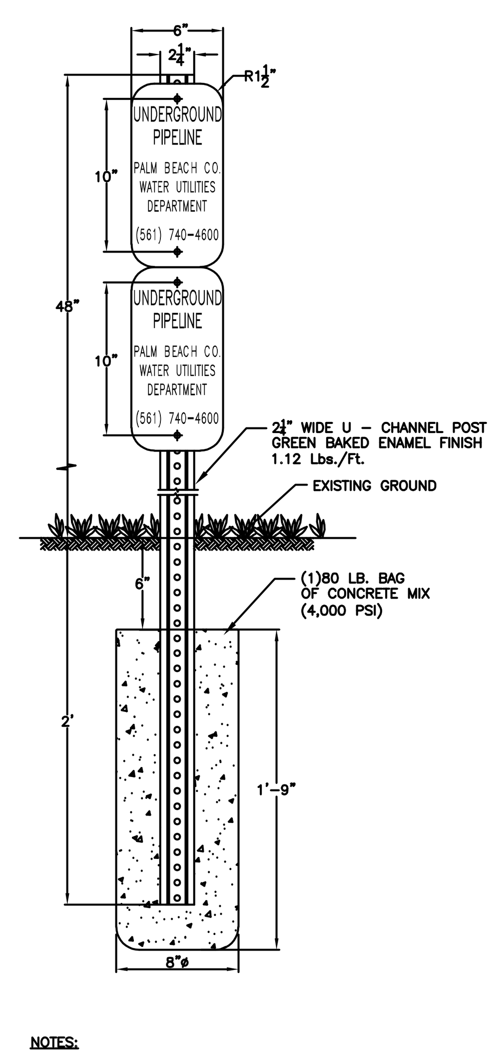

NOTES:

1. SIGNS SHALL BE 6" WIDE X 12" LONG, ALUMINUM (0.080 GA.). SIGN COLOR IS WHITE WITH BLACK LETTERING. ROUNDED CORNERS (1.5" RAD.), 2 HOLES (3/8" DIAM.), 10" O.C.
2. THE DUAL UNDERGROUND PIPELINE SIGN SHALL BE UTILIZED FOR TWO UNDERGROUND PIPELINES WITHIN THE L.W.D.D. RIGHT-OF-WAY.

DUAL UNDERGROUND PIPELINE SIGN DETAIL

37W

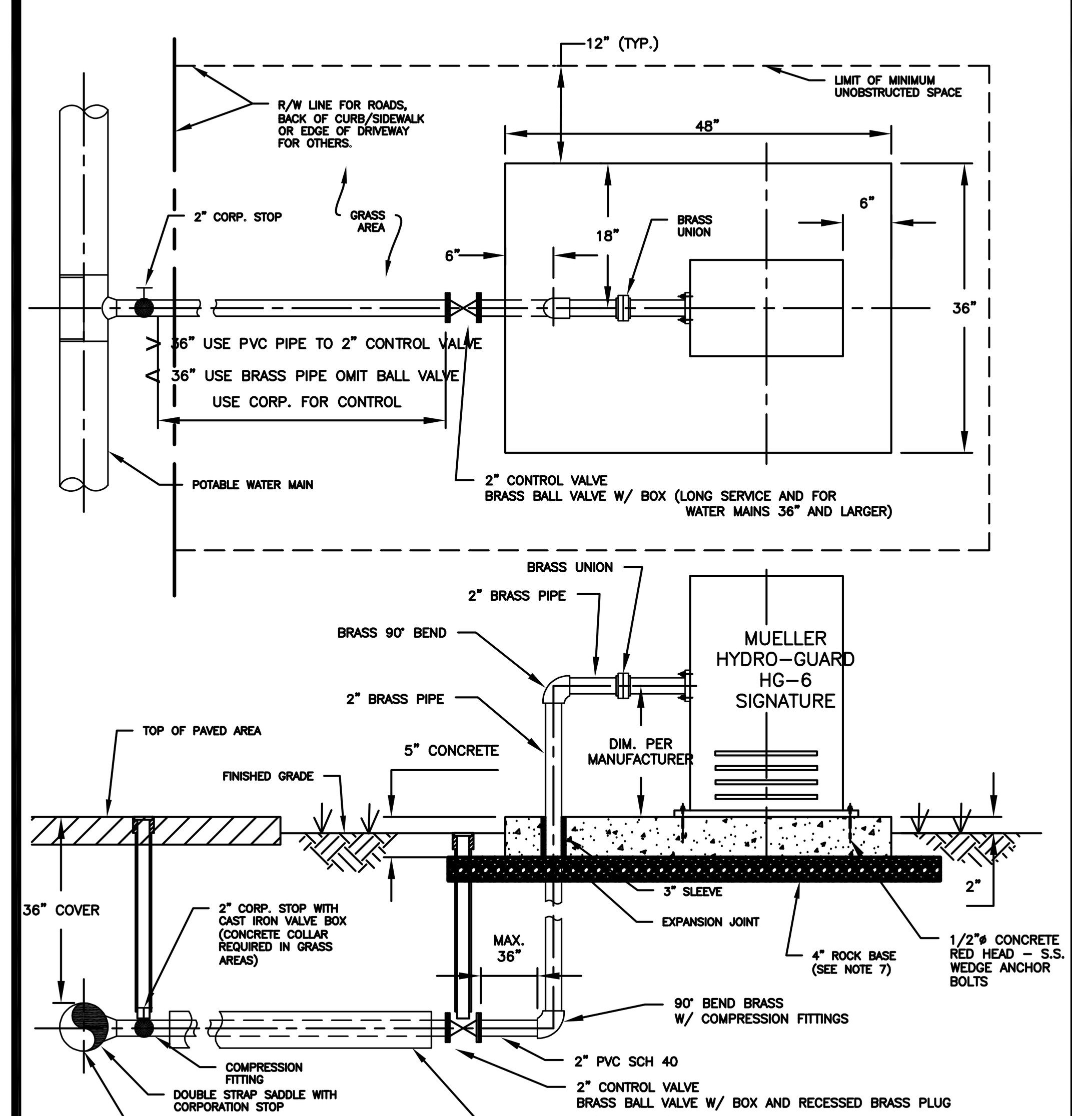

NOTES:

1. 12" MINIMUM CLEARANCE TO BE MAINTAINED BETWEEN AUTOMATIC FLUSHING SYSTEM PAD AND ANY OBSTRUCTION.
2. FOR INSTALLATION OF SERVICES UNDER DRIVEWAYS AND ROADWAYS, USE MIN. 4" DIAMETER BLACK IRON, PVC SCH 40, OR HDPE SDR 9 CASING. CASING SHALL EXTEND MIN. 24" BEYOND EDGE OF PAVEMENT. CASING TO BE SEALED WITH CEMENT. CASING SHALL BE COLOR-CODED BLACK, WHITE, BLUE, OR BLUE STRIPED.
3. AUTOMATIC FLUSHING ASSEMBLY TO BE INSTALLED AS CLOSE AS POSSIBLE TO THE WATER MAIN.
4. BEDDING (MIN. 4") AND COVER (MIN. 4") OVER SERVICE LINE OR CASING SHALL CONSIST OF FINE GRANULAR MATERIAL. UNSUITABLE IN-SITU MATERIALS SUCH AS MUCK, DEBRIS AND LARGER ROCKS SHALL BE REMOVED WITH 2" MAXIMUM SIZE.
5. ALL HARDWARE FOR FLANGED CONNECTIONS (BOLTS, ETC.) TO BE STAINLESS STEEL.
6. THREADED AREAS OF CORPORATION STOP AND OTHER FITTINGS SHALL BE SPIRAL WRAPPED WITH TWO (2) WRAPS OF TEFLON TAPE. ALL BRASS SHALL BE "LEAD FREE".
7. A 4" THICK COMPACTED 3/4" ROCK BASE IS REQUIRED. THE BASE SHALL EXTEND MINIMUM 12" BEYOND AUTOMATIC FLUSHING ASSEMBLY PAD PERIMETER.

PRIOR DEPARTMENT APPROVAL REQUIRED BEFORE PROJECT BEING APPROVED FOR INSTALLATION.

AUTOMATIC FLUSHING ASSEMBLY (TYPE B) *

44W

MIN. LENGTH OF PIPE (FEET) TO BE RESTRAINED
(SOURCES: EBAA IRON RESTRAINT LENGTH CALCULATION PROGRAM FOR PVC PIPE, RELEASE 3.1, AND DIPRA THRUST RESTRAINT FOR DUCTILE IRON PIPE, RELEASE 3.2)

FITTING TYPE		PIPE SIZE								200psi			
		4"	6"	8"	10"	12"	16"	20"	24"	30"	36"	42"	48"
90° HORIZ. BEND		14	20	25	30	35	45	54	62	98	112	124	135
45° HORIZ. BEND		6	8	11	13	15	19	22	26	41	46	51	56
22.5° HORIZ. BEND		3	4	5	6	7	9	11	12	19	22	25	27
11.25° HORIZ. BEND		1	2	3	3	4	4	5	6	10	11	12	13
90° VERT. OFFSET	UPPER BEND	29	41	53	64	74	95	115	134	214	246	276	304
	LOWER BEND	7	10	13	16	19	25	30	35	57	66	74	83
45° VERT. OFFSET	UPPER BEND	12	19	24	29	34	39	48	56	89	102	114	126
	LOWER BEND	3	4	6	7	8	10	12	15	23	27	31	34
22.5° VERT. OFFSET	UPPER BEND	6	9	12	14	17	19	23	27	43	49	55	60
	LOWER BEND	1	2	4	4	4	5	6	7	11	13	15	16
11.25° VERT. OFFSET	UPPER BEND	3	4	6	7	8	9	11	13	21	24	27	30
	LOWER BEND	1	1	1	2	2	2	3	3	6	6	7	8
PLUG (DEAD END)		32	45	59	70	83	107	129	151	214	246	276	304
IN-LINE VALVE		32	45	45	45	45	55	65	80	110	125	140	155
TEE (BRANCH RESTRAINT)	4"X ø	23	–	–	–	–	–	–	–	–	–	–	–
	6"X ø	21	35	–	–	–	–	–	–	–	–	–	–
	8"X ø	18	34	47	–	–	–	–	–	–	–	–	–
	10"X ø	16	32	46	58	–	–	–	–	–	–	–	–
	12"X ø	13	30	44	57	69	–	–	–	–	–	–	–
	16"X ø	7	26	41	55	67	90	–	–	–	–	–	–
	20"X ø	1	21	38	52	65	88	109	–	–	–	–	–
	24"X ø	1	16	34	49	62	86	108	129	–	–	–	–
	30"X ø	1	8	28	44	58	83	106	127	208	–	–	–
	36"X ø	1	1	22	39	54	80	103	124	206	240	–	–
	42"X ø	1	1	15	33	49	77	100	122	205	239	270	–
	48"X ø	1	1	7	27	44	73	97	120	203	238	269	298
REDUCER (LARGER PIPE RESTRAINT)	6"X ø	23	–	–	–	–	–	–	–	–	–	–	–
	8"X ø	38	25	–	–	–	–	–	–	–	–	–	–
	10"X ø	57	43	24	–	–	–	–	–	–	–	–	–
	12"X ø	72	60	44	41	–	–	–	–	–	–	–	–
	16"X ø	99	90	78	75	45	–	–	–	–	–	–	–
	20"X ø	123	116	107	105	81	45	–	–	–	–	–	–
	24"X ø	146	140	132	131	111	82	45	–	–	–	–	–
200psi	30"X ø	209	204	197	188	177	153	116	75	–	–	–	–
	36"X ø	243	236	233	226	217	196	168	135	74	–	–	–
	42"X ø	273	270	265	259	252	234	211	183	133	72	–	–
	48"X ø	301	298	294	289	283	268	249	226	183	131	71	–

NOTES:

1. THE DATA IN THE ABOVE TABLE ARE BASED UPON THE FOLLOWING INSTALLATION CONDITIONS:
   SOIL TYPE-SAND TEST PRESSURE-150 PSI/200 PSI DEPTH OF BURY-3'
   TRENCH TYPE-3 SAFETY FACTOR- 1.5 VERTICAL OFFSET-3'
   MINIMUM PIPE LENGTH ALONG TEE RUN-5'
2. THE RESTRAINED PIPE LENGTHS APPLY TO DUCTILE IRON AND PVC PIPE.
3. ALL JOINTS BETWEEN UPPER AND LOWER BENDS SHALL BE RESTRAINED.
4. RESTRAINED PIPE LENGTHS APPLY TO PIPE ON BOTH SIDES OF VALVES AND FITTINGS.
5. MULTIPLY PIPE LENGTH BY 1.4 FOR POLYETHYLENE ENCASED PIPE.
6. RESTRAINED PIPE LENGTHS EQUAL TO AN "INLINE VALVE" CONDITION ARE REQUIRED AT EACH END OF A TRANSITION FROM HDPE PIPE TO OTHER PIPE MATERIALS.
7. DESIGN ENGINEER IS RESPONSIBLE TO PROPERLY SIZE THE RESTRAINT PIPE LENGTHS FOR THE PROJECT

MECHANICAL THRUST RESTRAINT MINIMUM PIPE LENGTHS

34W

MAXIMUM QUANTITY OF WATER (GALLONS PER HOUR) THAT MAY BE SUPPLIED TO MAINTAIN PRESSURE WITHIN 5 P.S.I. OF THE SPECIFIED TEST PRESSURE

(MECHANICAL OR PUSH-ON JOINT, 18 FT. NOMINAL LENGTHS, PER 1000 FT. OF PIPE)

AVG. TEST PRESSURE PSI	PIPE DIAMETER (INCHES) 2	3	4	6	8	10	12	14	16	18	20	24	30	36	42	48
150	0.10	0.14	0.18	0.27	0.37	0.46	0.55	0.64	0.73	0.83	0.92	1.10	1.38	1.65	1.93	2.20
200	0.10	0.15	0.21	0.31	0.42	0.53	0.63	0.74	0.84	0.95	1.06	1.27	1.59	1.91	2.22	2.54

FORMULA BASIS: $L = \frac{(S) \times (D) \times (P)^{1/2}}{148{,}000} \times 1/2$

L = MAXIMUM QUANTITY OF WATER TO BE ADDED (GALLONS PER HOUR)
S = LENGTH OF PIPE TESTED (FEET)
D = DIAMETER OF PIPE (INCHES)
P = TEST PRESSURE (P.S.I.)

NOTES:

1. TO OBTAIN THE MAXIMUM QUANTITY OF WATER FOR PIPE WITH 20 FT. NOMINAL LENGTHS, MULTIPLY THE QUANTITY CALCULATED FROM THE TABLE BY 0.9
2. THE MAXIMUM QUANTITY OF ADDED WATER FOR A PIPELINE IS CALCULATED BY MULTIPLYING THE QUANTITY PER HOUR AS OBTAINED FROM THE ABOVE TABLE, BY THE DURATION OF THE TEST IN HOURS,AND BY THE TOTAL LENGTH OF THE LINE BEING TESTED DIVIDED BY 1,000. IF THE LINE UNDER TEST CONTAINS SECTIONS OF VARIOUS DIAMETERS, THE MAXIMUM QUANTITY ADDED WILL BE THE SUM OF THE COMPUTED QUANTITIES FOR EACH SIZE.
3. MAXIMUM TEST LENGTH = 2,500 FEET PER SECTION.
4. THIS STANDARD SHALL REFLECT ANY REVISION OF A.W.W.A. C-600. HOWEVER, THE MAXIMUM QUANTITY OF WATER ADDED SHALL NOT EXCEED 50% OF THE RECOMMENDED LIMIT PER APPLICABLE AWWA C-600 STANDARD.
5. STANDARD TEST PRESSURE = 150 P.S.I.; 200 P.S.I. FOR MAINS LARGER THAN 24"
6. PRESSURE TEST DURATION TO BE MIN. 2 HOURS.

POTABLE WATER MAIN PRESSURE TEST CRITERIA

31W

POTABLE WATER #4 STANDARD DETAILS

CONSULTANT:

IT'S THE LAW !
CALL 48 HOURS BEFORE YOU DIG
1-800-432-4770
SUNSHINE STATE ONE CALL OF FLORIDA, INC. UTILITIES NOTIFICATION CENTER

DESIGNED BY: WUD
DRAWN BY: M. BUCKNER
CHECKED BY: J. LAMMERT
APPROVED BY: WUD

Palm Beach County
Water Utilities Department
P.O.Box 16097
West Palm Beach, FL 33416-6097

PROJECT NO. 22-___

OXYGEN DEVELOPMENT

PALM BEACH COUNTY FLORIDA

PALM BEACH COUNTY
WATER UTILITIES DEPARTMENT
P.O. BOX 16097
WEST PALM BEACH, FL 33416
(561)493-6000

NO.	DATE	REVISION / REMARKS	BY
	JUNE 2019	* GENERAL REVISION	J.L.

STD DETAILS

SEAL

SCOTT M. GINTERT, P.E.
FLORIDA P.E. #84228
Jul 21, 2022

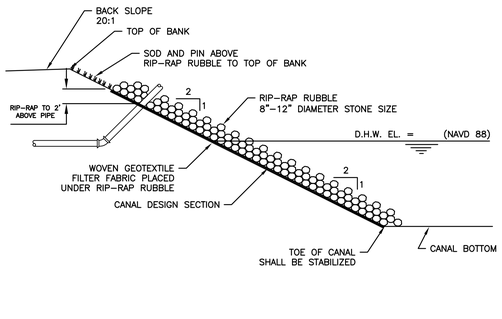

NOTES:

1. RIP-RAP RUBBLE AND ITS INSTALLATION MUST MEET CANAL OWNERSHIP SPECIFICATIONS AND PERMITTING REQUIREMENTS.
2. DUMP RUBBLE IN PLACE FORMING A COMPACT LAYER CONFORMING TO THE CANAL DESIGN SECTION SLOPE. ENSURE THAT RUBBLE DOES NOT SEGREGATE SO THAT SMALLER PIECES EVENLY FILL THE VOIDS BETWEEN LAGER PIECES.
3. AN ALTERNATIVE DESIGN WILL BE CONSIDERED AND MUST RECEIVE PRIOR APPROVAL FROM THE CANAL PROPERTY OWNER.

RIP-RAP RUBBLE DETAIL * 45W

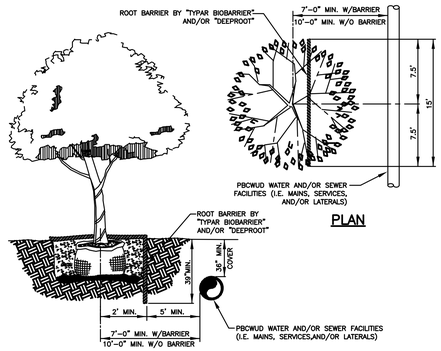

NOTES:

1. TREES SHOWN ON THIS PLAN ARE FOR GRAPHIC REPRESENTATION ONLY. TREE SPACING IS BASED ON DESIGN REQUIREMENTS AND THE TREES SHOWN ON THESE PLANS ATTEMPT TO ACCOMPLISH THAT SPACING WHILE MAINTAINING THE REQUIRED SETBACKS FROM UTILITIES. TREES MAY BE FIELD ADJUSTED TO AVOID CONFLICTS WITH DRIVEWAYS AND UNDERGROUND UTILITIES. IN ANY CASE THE TREES SHALL BE LOCATED IN THE FIELD IN ACCORDANCE WITH THE PLANTING DETAILS SHOWN HEREON.
2. TREES ARE TO BE INSTALLED WITH A TEN FOOT (10') SEPARATION FROM ANY WATER OR SEWER MAIN AND/OR SERVICE, HYDRANTS, AND LIFT STATIONS. IF A TEN FOOT (10') SEPARATION CANNOT BE ACHIEVED, THE TREE CAN BE INSTALLED WITH A ROOT BARRIER SYSTEM. HOWEVER, IN NO CASE SHALL A TREE ENCROACH INTO A PBCUE WITHOUT PRIOR DEPARTMENT APPROVAL.
3. ONLY SOD CAN BE INSTALLED WITHIN 7.5' MINIMUM OF A FLUSHING HYDRANT UNLESS OTHERWISE APPROVED BY THE FIRE MARSHAL AND THE DEPARTMENT.
4. SOD ONLY SHALL BE INSTALLED WITHIN 5.0' MINIMUM OF ANY DEPARTMENT RECLAIMED WATER METER.

LANDSCAPE AND ROOT BARRIER DETAIL * 46W

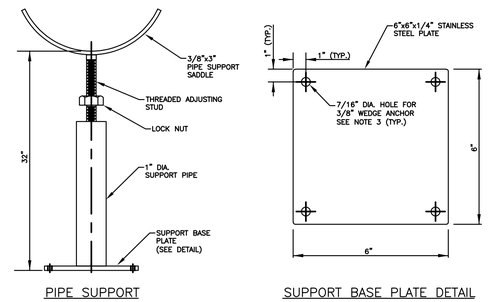

NOTES:

1. SHOP DRAWING FOR THE METER ASSEMBLY PIPE SUPPORT IS REQUIRED TO BE SUBMITTED FOR APPROVAL BY THE DEPARTMENT PRIOR TO THE PIPE SUPPORT BEING CONSTRUCTED AND/OR INSTALLED. ALL PIPE SUPPORTS FOR EACH METER ASSEMBLY INSTALLATION SHALL BE THE SAME.
2. ALL PIPE SUPPORT MATERIALS AND MOUNTING HARDWARE ARE REQUIRED TO BE 304 STAINLESS STEEL.
3. THE REQUIRED WEDGE ANCHORS FOR EACH SUPPORT SHALL BE 3/8" DIAMETER WITH NOMINAL EMBEDMENT OF 2-3/8". EACH ANCHOR SHALL HAVE A WASHER, LOCK WASHER, AND NUT.

ABOVE GROUND WATER METER INSTALLATION
PIPE SUPPORT * 47W

POTABLE WATER #5
STANDARD DETAILS

CONSULTANT:

IT'S THE LAW !
CALL 48 HOURS BEFORE YOU DIG
1-800-432-4770
SUNSHINE STATE ONE CALL OF FLORIDA, INC.
UTILITIES NOTIFICATION CENTER

DESIGNED BY: WUD
DRAWN BY: M. BUCKNER
CHECKED BY: J. LAMMERT
APPROVED BY: WUD

Palm Beach County
Water Utilities Department
P.O.Box 16097
West Palm Beach, FL 33416-6097

PROJECT NO.
22-___

OXYGEN DEVELOPMENT

PALM BEACH COUNTY
WATER UTILITIES DEPARTMENT
P.O. BOX 16097
WEST PALM BEACH, FL 33416
(561)493-6000

NO.	DATE	REVISION / REMARKS	BY
	JUNE 2019	* GENERAL REVISION	J.L.

STD DETAILS

SHEET NUMBER 18 OF 23

SEAL

SCOTT M. GINTERT, P.E.
FLORIDA P.E. #84228
Jul 21, 2022

Drawing: W:\Projects\2022\22-006_Oxygen Development\CAD\WUD 2019 STD DTLS - POTABLE WATER (5 SHTS).dwg\WUD PWS-5 - Last Modified: Thu, Jul 21, 2022 - 11:11am

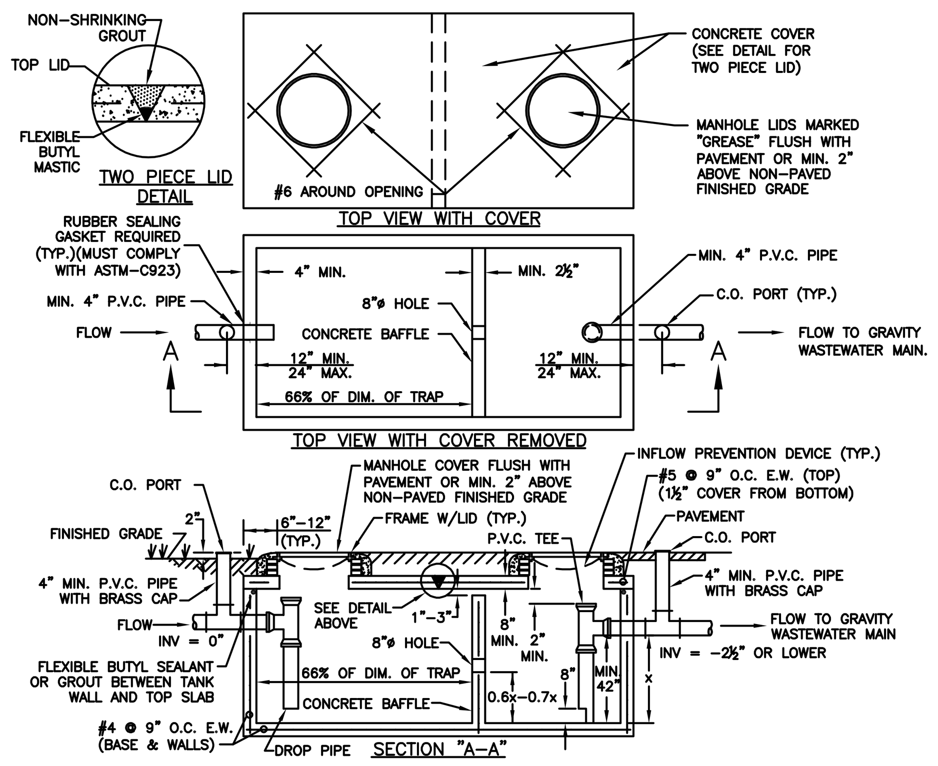

NOTES:

1. OIL/GREASE INTERCEPTORS SHALL BE WATERTIGHT AND SHALL BE BUILT OF PRECAST CONCRETE WHICH HAS A DESIGN COMPRESSIVE STRENGTH OF MINIMUM 3000 PSI AFTER 28 DAYS CURE. THE DESIGN, SIZING AND CONSTRUCTION MUST CONFORM TO THIS STANDARD AND TO ALL APPLICABLE BUILDING CODES, HEALTH DEPARTMENT REQUIREMENTS AND REGULATIONS, INCLUDING, BUT NOT LIMITED TO CHAPTER 64E-6, FLORIDA ADMINISTRATIVE CODE. WALL AND SLAB THICKNESS SHOWN ARE MINIMUMS, AND SHALL BE DETERMINED BY THE OWNER'S ENGINEER. THE CONCRETE BOX SHALL BE MONOLITHIC POURED AND SHALL HAVE A PRECAST HOLE ON EACH END ONLY FOR LATERAL. THE PRECAST HOLES SHALL HAVE CAST-IN BOOTS WHENEVER POSSIBLE. AN ALTERNATIVE TYPE OF INTERCEPTOR OTHER THAN A PRECAST CONCRETE STRUCTURE MAY BE INSTALLED ONLY WITH PRIOR DEPARTMENT APPROVAL. SHOP DRAWINGS ARE REQUIRED TO BE SUBMITTED AND APPROVED BY THE DEPARTMENT PRIOR TO THE PRE-CONSTRUCTION MEETING FOR ALL INTERCEPTORS.
2. THE OIL/GREASE INTERCEPTOR SHALL BE USED FOR APPLICATIONS EXCEEDING 25 GPM FLOW RATE, DETERMINED USING THE PLUMBING AND DRAINAGE INSTITUTE PDI G101 STANDARD. A DESIGN CALCULATION MUST BE SUBMITTED FOR APPROVAL WITH A SHOP DRAWING PRIOR TO THE PRE-CONSTRUCTION MEETING. FOR APPLICATIONS UP TO 25 GPM FLOW RATE (ONE MINUTE FLOW) OR 50 GPM (TWO MINUTE FLOW), AN APPROVED OUTDOOR "GREASE TRAP" MAY BE USED; OTHER DESIGNS MAY BE CONSIDERED UPON SUBMITTAL AND APPROVAL OF SHOP DRAWINGS.
3. INSPECTION PORTS (CLEAN OUTS) ARE REQUIRED TO BE INSTALLED AT EACH END OF ANY TYPE OF INTERCEPTOR WITH PORTS TO REMAIN EASILY ACCESSIBLE FOR UTILITY INSPECTION AND SAMPLING.
4. THE INTERCEPTOR AND CLEAN-OUTS PORT SHALL BE LOCATED OUTSIDE AND IN NON-TRAFFIC AREA WHENEVER POSSIBLE. IF INSTALLED IN IN A TRAFFIC AREA MINI-MANHOLES ARE REQUIRED ON THE INSPECTION PORTS (CLEAN OUTS). THE SURFACE SURROUNDING THE INTERCEPTOR SHALL BE SLOPED TO DRAIN STORM WATER AWAY FROM THE INTERCEPTOR.
5. THE CAPACITY DETERMINATION FOR THE INTERCEPTOR IS THE RESPONSIBILITY OF THE OWNER/CUSTOMER. THE MINIMUM VOLUME OF ANY GREASE INTERCEPTOR SHALL BE 750 GALLONS AND THE MAXIMUM VOLUME OF A SINGLE GREASE INTERCEPTOR SHALL BE 1250 GALLONS. WHEN THE REQUIRED EFFECTIVE CAPACITY OF THE GREASE INTERCEPTOR IS GREATER THAN 1250 GALLONS, INSTALLATION OF MULTIPLE GREASE INTERCEPTORS IN SERIES IS REQUIRED.
6. NO BAFFLE IS REQUIRED IF THERE ARE MULTIPLE GREASE INTERCEPTORS INSTALLED IN SERIES. HOWEVER, CLEANOUT PORTS MUST BE INSTALLED ON EACH END OF EACH INTERCEPTOR.
7. THE PROPERTY OWNER/CUSTOMER SHALL BE RESPONSIBLE FOR THE OPERATION AND MAINTENANCE OF THE INTERCEPTOR.
8. THE GREASE INTERCEPTOR SHALL NOT BE USED FOR THE PURPOSE OF INTERCEPTING SAND AND OIL FROM NON- FOOD HANDLING ESTABLISHMENTS.
9. EACH FACILITY WITH AN OIL/GREASE INTERCEPTOR SHALL HAVE A SEPARATE (NOT SHARED) INTERCEPTOR AND SHALL BE INDIVIDUALLY METERED THROUGH THE DEPARTMENT.
10. A "GREASE TRAP" OR "OIL/GREASE INTERCEPTOR" SHALL BE REQUIRED TO RECEIVE THE DRAINAGE FROM FIXTURES AND EQUIPMENT (SINKS, DISHWASHERS, FLOOR DRAINS, CAN WASH AREAS, ETC.) WITH GREASE LADEN WASTE LOCATED IN COMMERCIAL FOOD PREPARATION AREAS SUCH AS RESTAURANTS, HOTEL KITCHENS, HOSPITALS, SCHOOL KITCHENS, BARS, FACTORY CAFETERIAS, CLUBS, ETC.
11. THE "GREASE TRAP" OR "OIL/GREASE INTERCEPTOR" SHALL BE LOCATED AS CLOSE AS PRACTICALLY POSSIBLE TO THE FIXTURES AND EQUIPMENT GENERATING GREASE.
12. A "SOLIDS INTERCEPTOR" SHALL BE CONSIDERED TO BE INSTALLED UPSTREAM OF A " GREASE TRAP" WHERE SUBSTANTIAL AMOUNT OF SOLIDS FROM FOOD GRINDERS, DISPOSALS MAY BE PRESENT.
13. MANHOLE COVER SHALL BE MACHINED TO ACCEPT INFLOW PROTECTOR.

OIL/ GREASE INTERCEPTOR

* 1S

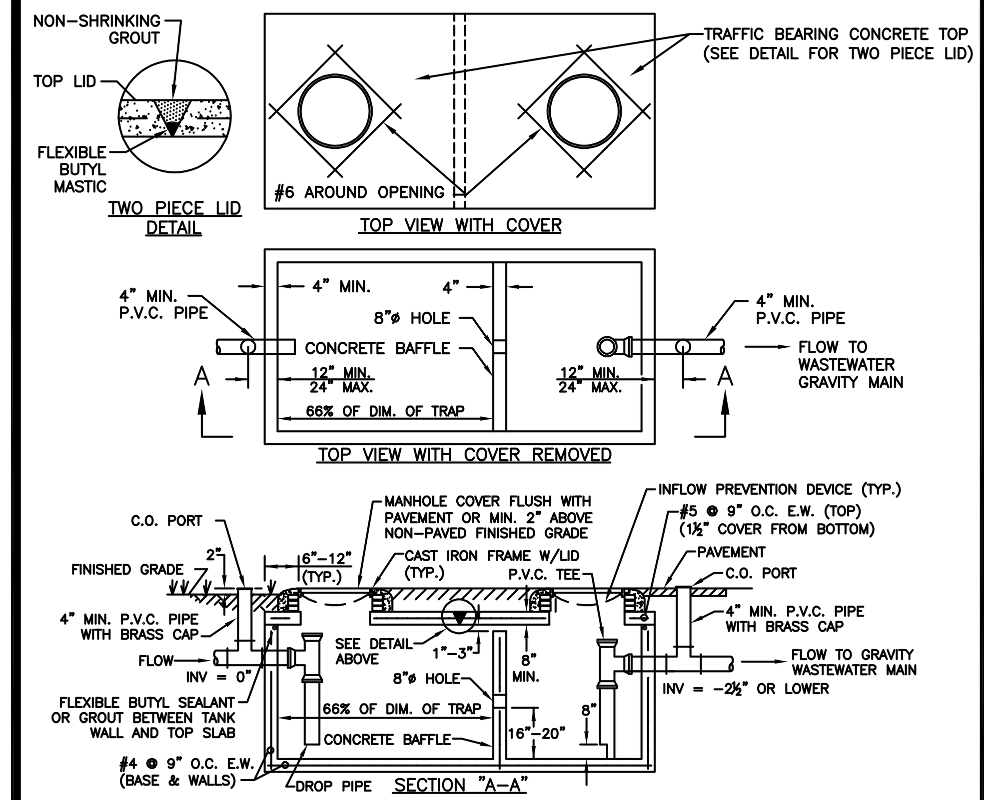

NOTES:

1. SAND/OIL INTERCEPTORS SHALL BE WATERTIGHT AND SHALL BE BUILT OF PRECAST CONCRETE WHICH HAS A DESIGN COMPRESSIVE STRENGTH OF MINIMUM 3000 PSI AFTER 28 DAYS CURE. THE DESIGN, SIZING AND CONSTRUCTION MUST CONFORM TO THIS STANDARD AND TO ALL APPLICABLE BUILDING CODES, HEALTH DEPARTMENT REQUIREMENTS AND REGULATIONS, INCLUDING, BUT NOT LIMITED TO CHAPTER 64E-6, FLORIDA ADMINISTRATIVE CODE. WALL AND SLAB THICKNESS SHOWN ARE MINIMUMS, AND SHALL BE DETERMINED BY THE OWNER'S ENGINEER. THE CONCRETE BOX SHALL BE MONOLITHIC POURED AND SHALL HAVE A PRECAST HOLE ON EACH END ONLY FOR LATERAL. THE PRECAST HOLES SHALL HAVE CAST-IN BOOTS WHENEVER POSSIBLE.
2. AN ALTERNATIVE TYPE OF INTERCEPTOR STRUCTURE MAY BE INSTALLED ONLY WITH PRIOR DEPARTMENT APPROVAL. SHOP DRAWINGS ARE REQUIRED TO BE SUBMITTED AND APPROVED BY THE DEPARTMENT PRIOR TO THE PRE-CONSTRUCTION MEETING FOR ALL INTERCEPTORS.
3. INSPECTION PORTS (CLEAN OUTS) ARE REQUIRED TO BE INSTALLED AT EACH END OF ANY TYPE OF INTERCEPTOR WITH PORTS TO REMAIN EASILY ACCESSIBLE FOR UTILITY INSPECTION AND SAMPLING.
4. THE INTERCEPTOR SHALL BE LOCATED IN GRASS AREA/NON-TRAFFIC AREA WHENEVER POSSIBLE. THE SURFACE SURROUNDING THE INTERCEPTOR SHALL BE SLOPED TO DRAIN STORM WATER AWAY FROM THE INTERCEPTOR.
5. THE CAPACITY DETERMINATION FOR THE INTERCEPTOR IS THE RESPONSIBILITY OF THE OWNER/CUSTOMER. THE MINIMUM VOLUME OF A SAND/OIL INTERCEPTOR SHALL BE 750 GALLONS. WHEN THE REQUIRED EFFECTIVE CAPACITY OF THE SAND/OIL INTERCEPTOR IS GREATER THAN 750 GALLONS, INSTALLATION OF SINGLE COMPARTMENT SAND/OIL INTERCEPTORS IN SERIES IS REQUIRED.
6. THE PROPERTY OWNER/CUSTOMER SHALL BE RESPONSIBLE FOR THE OPERATION AND MAINTENANCE OF THE INTERCEPTOR.
7. SAND/OIL INTERCEPTOR SHALL NOT BE USED FOR THE PURPOSE OF INTERCEPTION OF GREASE FROM FOOD HANDLING ESTABLISHMENTS.
8. EACH FACILITY REQUIRED TO HAVE A SAND/OIL INTERCEPTOR SHALL HAVE A SEPERATE INTERCEPTOR AND SHALL BE INDIVIDUALLY METERED THROUGH THE DEPARTMENT.
9. MANHOLE LIDS SHALL BE MACHINED TO ACCEPT INFLOW PREVENTER.

SAND/ OIL INTERCEPTOR

* 2S

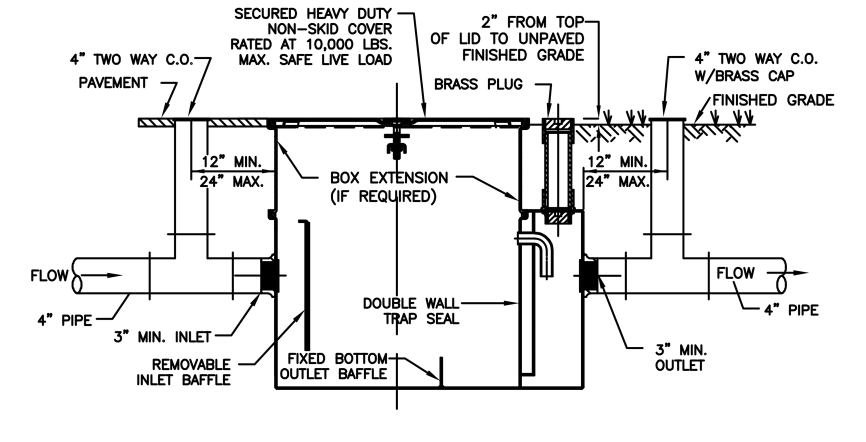

NOTES:

1. THE GREASE TRAP SHALL BE WATERTIGHT AND GAS TIGHT AND SHALL BE FABRICATED FROM STEEL, ACID RESISTANT COATED INTERIOR AND EXTERIOR.
2. THE GREASE TRAP SHALL BE CERTIFIED AND TAGGED BY THE SEAL OF THE PLUMBING AND DRAINAGE INSTITUTE (PDI), AND PDI RATED AT 50 GPM FLOW RATE AND 100 LBS. GREASE CAPACITY. THE GREASE TRAP SIZE, DESIGN AND INSTALLATION MUST COMPLY OR EXCEED THE APPLICABLE BUILDING CODES AND REGULATIONS.
3. THE GREASE TRAP MAY BE USED IF AN OIL/GREASE INTERCEPTOR IS NOT REQUIRED AND ONLY FOR APPLICATIONS UP TO 25 GPM FLOW RATE (ONE MINUTE FLOW) OR 50 GPM (TWO MINUTE FLOW), DETERMINED USING THE PDI G 101 STANDARD. FOR HIGHER FLOW RATES OR GREASE CAPACITY GREATER THAN 50 LBS., AN APPROVED "OIL/GREASE INTERCEPTOR" WILL BE REQUIRED. A DESIGN CALCULATION SHALL BE SUBMITTED FOR APPROVAL WITH A SHOP DRAWING PRIOR TO PRE-CONSTRUCTION MEETING. THE SHOP DRAWING SHALL BE SIGNED BY THE DESIGNING ENGINEER AND BY THE CONTRACTOR. THE PROJECT NAME WITH STREET ADDRESS OF THE FACILITY (IF AVAILABLE) SHALL BE SHOWN ON THE SHOP DRAWING. OTHER DESIGNS MAY BE USED UPON APPROVAL OF SHOP DRAWINGS.
4. THE GREASE TRAP SHALL BE LOCATED OUTDOORS, EASY ACCESSIBLE FOR MAINTENANCE AND SAMPLING, PREFERABLY IN GRASS AREA, NOT IN TRAFFIC AREA, PARKING SPACES OR SIDEWALKS. THE SURFACE SURROUNDING THE GREASE TRAP SHALL BE SLOPED TO DRAIN STORM WATER AWAY FROM THE GREASE TRAP.
5. THE GREASE TRAP SHALL NOT BE USED FOR THE PURPOSE OF INTERCEPTING SAND AND OIL FROM NON-FOOD HANDLING ESTABLISHMENTS.
6. THE PROPERTY OWNER/CUSTOMER SHALL BE RESPONSIBLE FOR THE OPERATION AND MAINTENANCE OF THE GREASE TRAP.
7. EACH FACILITY WITH A GREASE TRAP SHALL BE INDIVIDUALLY METERED THROUGH THE DEPARTMENT.
8. EACH FACILITY WHICH IS REQUIRED TO INSTALL A GREASE TRAP SHALL HAVE A SEPARATE (NOT SHARED) GREASE TRAP.
9. INSPECTION PORTS (CLEAN OUTS) ARE REQUIRED TO BE INSTALLED AT EACH END OF ANY TYPE OF INTERCEPTOR WITH PORTS TO REMAIN EASILY ACCESSIBLE FOR UTILITY INSPECTION AND SAMPLING.
10. A "GREASE TRAP" OR "OIL/GREASE INTERCEPTOR" SHALL BE REQUIRED TO RECEIVE THE DRAINAGE FROM FIXTURES AND EQUIPMENT (SINKS, DISHWASHERS, FLOOR DRAINS, CAN WASH AREAS, ETC.) WITH GREASE LADDEN WASTE LOCATED IN COMMERCIAL FOOD PREPARATION AREAS SUCH AS RESTAURANTS, HOTEL KITCHENS, HOSPITALS, SCHOOL KITCHENS, BARS, FACTORY CAFETERIAS, CLUBS, ETC.
11. THE "GREASE TRAP" OR "OIL/GREASE INTERCEPTOR" SHALL BE LOCATED AS CLOSE PRACTICALLY POSSIBLE TO THE FIXTURES AND EQUIPMENT GENERATING GREASE.
12. GREASE TRAPS SHALL BE EQUIPPED WITH DEVICES TO CONTROL THE RATE OF FLOW, SO THE RATE OF THE FLOW DO NOT EXCEED 25 GPM. THE FLOW CONTROL DEVICE SHALL BE INSTALLED IN ACCORDANCE WITH THE CODE AND MANUFACTURER'S INSTRUCTIONS.
13. A "SOLIDS INTERCEPTOR" SHALL BE CONSIDERED TO BE INSTALLED UPSTREAM OF A " GREASE TRAP" WHERE SUBSTANTIAL AMOUNT OF SOLIDS FROM FOOD GRINDERS, DISPOSALS MAY BE PRESENT.

GREASE TRAP

* 3S

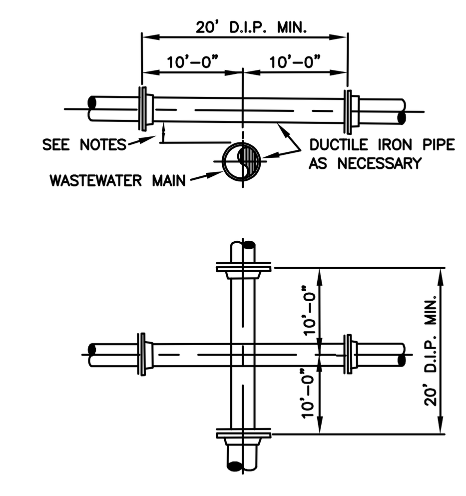

NOTES:

1. STORM SEWER, GRAVITY WASTEWATER AND RECLAIMED WATER MAIN CROSSING UNDER POTABLE WATER MAINS SHALL BE LAID TO PROVIDE A MINIMUM VERTICAL DISTANCE OF TWELVE (12) INCHES BETWEEN THE INVERT OF THE UPPER PIPE AND THE CROWN OF THE LOWER PIPE. WHERE THIS MINIMUM SEPARATION CANNOT BE MAINTAINED, THE CROSSING SHALL BE ARRANGED SO THAT THE STORM/WASTEWATER/RECLAIMED WATER PIPE JOINTS AND POTABLE WATER MAIN JOINTS ARE EQUIDISTANT FROM THE POINT OF CROSSING WITH NO LESS THAN TEN (10) FEET BETWEEN ANY TWO JOINTS, BOTH PIPES SHALL BE D.I.P., AND THE MINIMUM VERTICAL SEPARATION SHALL BE 6 INCHES. WHERE THERE IS NO ALTERNATIVE TO STORM/WASTEWATER/RECLAIMED WATER PIPES CROSSING OVER A POTABLE WATER MAIN, THE CRITERIA FOR MINIMUM 12" VERTICAL SEPARATION BETWEEN LINES AND JOINT ARRANGEMENT, AS STATED ABOVE, SHALL BE REQUIRED, AND BOTH PIPES SHALL BE D.I.P. IRRESPECTIVE OF SEPARATION. D.I.P. IS NOT REQUIRED FOR STORM SEWERS.
2. WHENEVER POSSIBLE MAINTAIN MIN. TEN (10) FEET HORIZONTAL DISTANCE (WALL TO WALL) BETWEEN POTABLE WATER MAIN AND STORM SEWER, WASTEWATER MAIN, OR FORCE MAIN (A MIN. 6' SEPARATION MAY BE APPROVED ON A CASE BY CASE BASIS). MAINTAIN MIN. THREE (3) FEET HORIZONTAL DISTANCE (WALL TO WALL) BETWEEN RECLAIMED WATER MAIN AND POTABLE WATER MAIN, STORM SEWER, WASTEWATER GRAVITY MAIN OR FORCE MAIN.
3. FORCE MAIN CROSSING POTABLE WATER MAIN OR RECLAIMED WATER MAIN SHALL BE LAID TO PROVIDE A MINIMUM VERTICAL DISTANCE OF TWELVE (12) INCHES BETWEEN THE OUTSIDE OF THE FORCE MAIN AND OUTSIDE OF THE POTABLE WATER MAIN OR RECLAIMED WATER MAIN WITH THE POTABLE WATER MAIN OR RECLAIMED WATER MAIN CROSSING OVER THE FORCE MAIN.
4. WASTEWATER LATERALS SHALL CROSS UNDER POTABLE WATER MAINS WITH A MIN. 12" VERTICAL SEPARATION WHENEVER POSSIBLE. WHERE THIS MINIMUM SEPARATION CANNOT BE MAINTAINED, A 20' SECTION OF DUCTILE IRON PIPE POTABLE WATER MAIN CENTERED ON THE CROSSING IS REQUIRED AND THE MINIMUM VERTICAL SEPARATION SHALL BE 6". WHERE THERE IS NO ALTERNATIVE TO A WASTEWATER LATERAL PIPE CROSSING OVER A POTABLE WATER MAIN, A MINIMUM 12" VERTICAL SEPARATION IS REQUIRED, THE LATERAL SHALL BE P.V.C. C-900 SDR18 OR BETTER, THE POTABLE WATER MAIN SHALL BE D.I.P. AND THE PIPE JOINTS SHALL BE EQUIDISTANT FROM THE POINT OF CROSSING.
5. POTABLE WATER SERVICE LINES SHALL CROSS OVER WASTEWATER MAINS WITH MIN. 12" VERTICAL SEPARATION. WHERE THIS MIN. SEPARATION CAN NOT BE MAINTAINED, THE WATER SERVICE SHALL BE ENCASED IN A MIN. 10' LONG CASING CENTERED OVER THE CROSSING WITH MIN. 6" VERTICAL SEPARATION.
6. WASTEWATER MAINS, WATER MAINS, STORM PIPES AND OTHER UTILITY PIPES SHALL CROSS PERPENDICULAR WHENEVER POSSIBLE.

POTABLE WATER MAN, WASTEWATER MAIN, AND STORM SEWER CONFLICT

4S

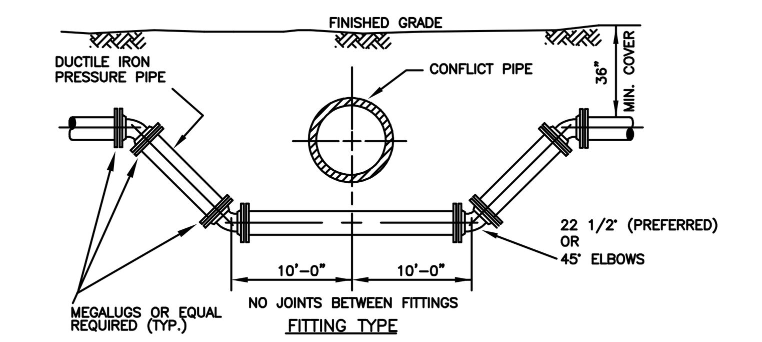

FITTING TYPE

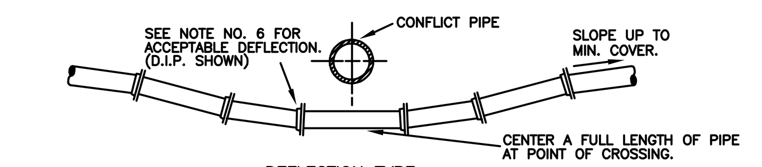

DEFLECTION TYPE

NOTES:

1. STORM SEWER, GRAVITY WASTEWATER AND RECLAIMED WATER MAIN CROSSING UNDER POTABLE WATER MAINS SHALL BE LAID TO PROVIDE A MINIMUM VERTICAL DISTANCE OF TWELVE (12) INCHES BETWEEN THE INVERT OF THE UPPER PIPE AND THE CROWN OF THE LOWER PIPE. WHERE THIS MINIMUM SEPARATION CANNOT BE MAINTAINED, THE CROSSING SHALL BE ARRANGED SO THAT THE STORM/WASTEWATER/RECLAIMED WATER PIPE JOINTS AND POTABLE WATER MAIN JOINTS ARE EQUIDISTANT FROM THE POINT OF CROSSING WITH NO LESS THAN TEN (10) FEET BETWEEN ANY TWO JOINTS, BOTH PIPES SHALL BE D.I.P., AND THE MINIMUM VERTICAL SEPARATION SHALL BE 6 INCHES. WHERE THERE IS NO ALTERNATIVE TO STORM/WASTEWATER/RECLAIMED WATER PIPES CROSSING OVER A POTABLE WATER MAIN, THE CRITERIA FOR MINIMUM 12" VERTICAL SEPARATION BETWEEN LINES AND JOINT ARRANGEMENT, AS STATED ABOVE, SHALL BE REQUIRED, AND BOTH PIPES SHALL BE D.I.P. IRRESPECTIVE OF SEPARATION. D.I.P. IS NOT REQUIRED FOR STORM SEWERS.
2. WHENEVER POSSIBLE MAINTAIN MIN. TEN (10) FEET HORIZONTAL DISTANCE (WALL TO WALL) BETWEEN POTABLE WATER MAIN AND STORM SEWER, WASTEWATER MAIN, OR FORCE MAIN (A MIN. 6' SEPARATION MAY BE APPROVED ON A CASE BY CASE BASIS.) MAINTAIN MIN. THREE (3) FEET HORIZONTAL DISTANCE (WALL TO WALL) BETWEEN RECLAIMED WATER MAIN AND POTABLE WATER MAIN, STORM SEWER, WASTEWATER GRAVITY MAIN OR FORCE MAIN.
3. FORCE MAIN CROSSING POTABLE WATER MAIN OR RECLAIMED WATER MAIN SHALL BE LAID TO PROVIDE A MINIMUM VERTICAL DISTANCE OF TWELVE (12) INCHES BETWEEN THE OUTSIDE OF THE FORCE MAIN AND OUTSIDE OF THE POTABLE WATER MAIN OR RECLAIMED WATER MAIN WITH THE POTABLE WATER MAIN OR RECLAIMED WATER MAIN CROSSING OVER THE FORCE MAIN.
4. FITTINGS SHALL BE RESTRAINED.
5. THE DEFLECTION TYPE CROSSING IS PREFERRED.
6. DO NOT EXCEED 75% OF MANUFACTURERS RECOMMENDED MAXIMUM JOINT DEFLECTION FOR DUCTILE IRON PIPE. PVC PIPE CURVATURE MAY ONLY BE ACCOMPLISHED BY INSTALLING APPROPRIATE BENDS.
7. ALL EXPOSED TIE STEEL SHALL BE COATED WITH COAL-TAR EPOXY.
8. POTABLE WATER SERVICE LINES SHALL CROSS OVER WASTEWATER MAINS WITH MIN. 12" VERTICAL SEPARATION. WHERE THIS MIN. SEPARATION CAN NOT BE MAINTAINED, THE WATER SERVICE SHALL BE ENCASED IN A MIN. 10' LONG CASING CENTERED OVER THE CROSSING WITH MIN. 6" VERTICAL SEPARATION.
9. WASTEWATER MAINS, WATER MAINS, STORM PIPES AND OTHER UTILITY PIPES SHALL CROSS PERPENDICULAR WHENEVER POSSIBLE.

POTABLE WATER MAIN/FORCE MAIN PRESSURE PIPE CONFLICT

5S

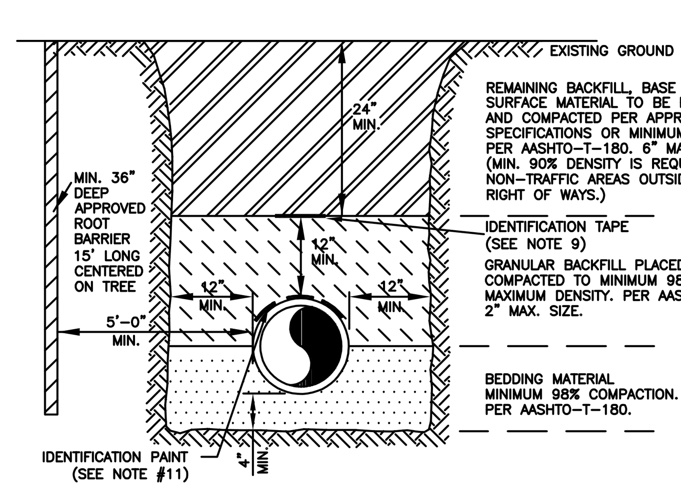

NOTES:

1. BEDDING SHALL CONSIST OF IN-SITU GRANULAR MATERIAL OR WASHED AND GRADED LIMEROCK 3/8"- 7/8" SIZING. UNSUITABLE IN-SITU MATERIALS SUCH AS MUCK, DEBRIS AND LARGER ROCKS SHALL BE REMOVED.
2. THE PIPE SHALL BE FULLY SUPPORTED FOR ITS ENTIRE LENGTH WITH APPROPRIATE COMPACTION UNDER THE PIPE HAUNCHES.
3. THE PIPE SHALL BE PLACED IN A DRY TRENCH.
4. BACKFILL SHALL BE FREE OF UNSUITABLE MATERIAL SUCH AS LARGE ROCK, MUCK AND DEBRIS.
5. DENSITY TESTS ARE REQUIRED IN 1 FOOT LIFTS ABOVE THE PIPE AT INTERVALS OF 400' MAXIMUM, MINIMUM 1 SET OF TESTS FOR EACH WASTEWATER GRAVITY MAIN RUN, OR AS DIRECTED BY THE INSPECTOR.
6. THE DEVELOPER/CONTRACTOR SHALL BE RESPONSIBLE TO COMPLY WITH ALL TRENCH SAFETY LAWS AND REGULATIONS.
7. SEE SEPARATE DETAILS FOR "PIPE INSTALLATION UNDER EXISTING PAVEMENT – OPEN CUT."
8. THE AFFECTED AREA SHALL BE RESTORED TO EQUAL OR BETTER CONDITION OR AS SPECIFIED IN PERMIT/CONTRACT DOCUMENTS.
9. APPROVED MAGNETIC TAPE IS REQUIRED FOR: ALL POTABLE WATER MAINS, FORCE MAINS AND RECLAIMED WATER MAINS. THE TAPE SHALL BE INSTALLED MAX. 24" BELOW FINISHED GRADE.
10. ROOT BARRIER IS REQUIRED FOR APPROVED TREE INSTALLATION CLOSER THAN 10 FEET FROM UTILITY FACILITIES.
11. CONTINUOUS 4" WIDE PAINT STRIPING IS REQUIRED FOR DIP/PCCP WATER MAINS (BLUE), DIP SEWER MAINS (GREEN), AND DIP RECLAIMED WATER MAINS (PURPLE).
12. PERMANENT ABOVE GROUND UTILITY MARKER SHALL BE INSTALLED IF REQUIRED BY PROPERTY OWNER GRANTING THE PIPE INSTALLATION PERMIT.
13. FOR PIPE INSTALLATIONS IN ROAD RIGHTS-OF-WAY, ROAD OWNER'S PERMIT SPECIFICATIONS SHALL APPLY.

TYPICAL TRENCH DETAIL ROOT BARRIER INSTALLATION

8S

CONSTRUCTION PROCEDURES

THE BACKFILL FOR THE FIRST AND SECOND STAGES SHALL BE PLACED IN 6" LIFTS (COMPACTED THICKNESS) AND SHALL BE COMPACTED TO 100% OF MAXIMUM DENSITY AS DETERMINED BY AASHTO T-99.

STAGE 1:

THE CONTRACTOR SHALL PROVIDE ADEQUATE COMPACTED FILL BENEATH THE HAUNCHES OF THE PIPE, USING MECHANICAL TAMPS SUITABLE FOR THIS PURPOSE. THIS COMPACTION APPLIES TO THE MATERIAL PLACED BENEATH THE HAUNCHES OF THE PIPE AND ABOVE ANY BEDDING REQUIRED.

STAGE 2:

THE CONTRACTOR SHALL OBTAIN A WELL-COMPACTED BED AND FILL ALONG THE SIDES OF THE PIPE AND TO A POINT INDICATING THE TOP OF SUB-GRADE MATERIAL.

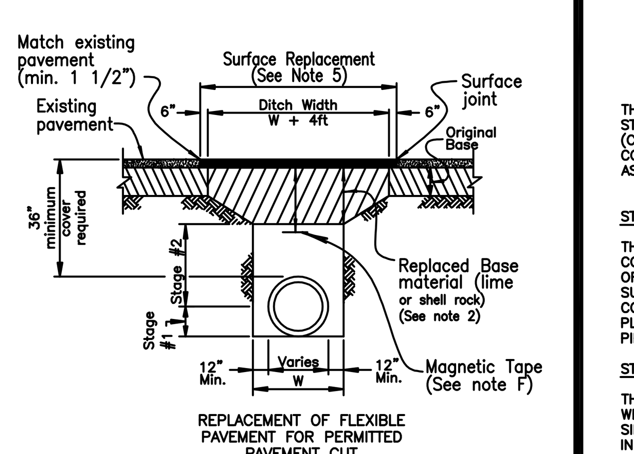

REPLACEMENT OF FLEXIBLE PAVEMENT FOR PERMITTED PAVEMENT CUT

CONSTRUCTION NOTES

1) BEDDING SHALL CONSIST OF IN-SITU GRANULAR MATERIAL OR WASHED AND GRADED LIMEROCK 3/8" – 7/8" SIZING WITH EQUAL OR GREATER STRUCTURAL ADEQUACY AS EXISTING. UNSUITABLE IN-SITU MATERIALS SUCH AS MUCK, DEBRIS AND LARGER ROCKS SHALL BE REMOVED.
2) REPLACED BASE MATERIAL (PER LAND DEVELOPMENT DESIGN STANDARDS) OVER DITCH SHALL BE TWICE THE THICKNESS OF THE ORIGINAL BASE OR 12" MINIMUM, WHICHEVER IS GREATER.
3) ASPHALT CONCRETE PAVEMENT JOINTS SHALL BE MECHANICALLY SAWED AND BUTT-JOINTED.
4) BASE MATERIAL SHALL BE PLACED IN TWO OR THREE LAYERS (6" MAX. PER LAYER) AND EACH LAYER THOROUGHLY ROLLED OR TAMPED TO THE SPECIFIED DENSITY.
5) SURFACE MATERIAL WILL BE CONSISTENT WITH THE EXISTING SURFACE OR 1 1/2" SI ASPHALTIC CONCRETE WITH RC-70 PRIME COAT AT 0.10 GAL/SQ. YD.
6) PIPE SHALL BE PLACED IN A DRY TRENCH.

GENERAL NOTES

A) ALL ROADWAY REPAIR WORK SHALL BE PERFORMED IN CONFORMANCE WITH APPLICABLE FDOT STANDARD SPECIFICATIONS FOR ROAD AND BRIDGE CONSTRUCTION AND COUNTY PPM# EL-0-3606.
B) DENSITY TESTS SHALL BE TAKEN IN 1 FT LIFTS ABOVE THE PIPE AT INTERVALS OF 400 FT MAXIMUM (1 SET MINIMUM) OR AS DIRECTED BY THE CONSTRUCTION COORDINATION DIVISION. RESULTS SHALL BE SUBMITTED TO CONSTRUCTION COORDINATION DIVISION AS PART OF THEIR FIELD REVIEW.
C) ENGINEER-OF-RECORD SHALL PROVIDE FULL-TIME INSPECTION DURING THE ENTIRETY OF THE OPEN-CUT OPERATION, BEGINNING WITH THE EXCAVATION AND CONTINUING THROUGH THE COMPLETION OF THE PAVING.
D) IF THE PAVEMENT IS NOT COMPLETELY RESTORED IMMEDIATELY FOLLOWING THE OPEN CUT, A SMOOTH TEMPORARY PATCH (MINIMUM 1.25" ASPHALT) SHALL BE INSTALLED, PROPERLY MATCHING THE EXISTING GRADING OF THE ROADWAY. THE TEMPORARY PATCH SHALL BE ALLOWED TO REMAIN IN PLACE AND BE MAINTAINED FOR A PERIOD NO LONGER THAN 45 DAYS. THE COUNTY RETAINS THE RIGHT TO USE POSTED SURETY TO COMPLETE ANY RESTORATION WORK THAT HAS NOT BEEN COMPLETED IN THE 45 DAYS PERIOD. ALTERNATIVE TEMPORARY TRENCH PROTECTION (STEEL PLATES OR OTHERS) MAY BE APPROVED BY THE CONSTRUCTION COORDINATION DIVISION.
E) FOR THE FINAL RESTORATION, THE ROAD SHALL BE MILLED AND RESURFACED WITH 1-1/2" (ONE AND A HALF INCH) OF SIII OR SI ASPHALT SURFACE COURSE FOR A FULL LANE WIDTH ENCROACHED BY THE TRENCH.
F) APPROVED MAGNETIC TAPE IS REQUIRED FOR ALL MAIN PRESSURE PIPES AND CONDUIT IN THE COUNTY'S RIGHT-OF-WAY. INSTALL TAPE 24" BELOW FINISHED GRADE.
G) CONTINUOUS 4" WIDE PAINT STRIPING IS REQUIRED FOR DIP/PCCP WATER MAINS (BLUE), DIP SANITARY MAINS (GREEN), DIP RECLAIMED WATER MAINS (PURPLE), GAS MAINS (YELLOW), OR AS REQUIRED BY THE APWA.

OPEN CUT PIPE INSTALLATION NON-THOROUGHFARE ROAD

6S

CONSTRUCTION PROCEDURES

THE BACKFILL FOR THE FIRST AND SECOND STAGES SHALL BE PLACED IN 6" LIFTS (COMPACTED THICKNESS) AND SHALL BE COMPACTED TO 100% OF MAXIMUM DENSITY AS DETERMINED BY AASHTO T-99.

STAGE 1:

THE CONTRACTOR SHALL PROVIDE ADEQUATE COMPACTED FILL BENEATH THE HAUNCHES OF THE PIPE, USING MECHANICAL TAMPS SUITABLE FOR THIS PURPOSE. THIS COMPACTION APPLIES TO THE MATERIAL PLACED BENEATH THE HAUNCHES OF THE PIPE AND ABOVE ANY BEDDING REQUIRED.

STAGE 2:

THE CONTRACTOR SHALL OBTAIN A WELL-COMPACTED BED AND FILL ALONG THE SIDES OF THE PIPE AND TO A POINT INDICATING THE TOP OF SUB-GRADE MATERIAL.

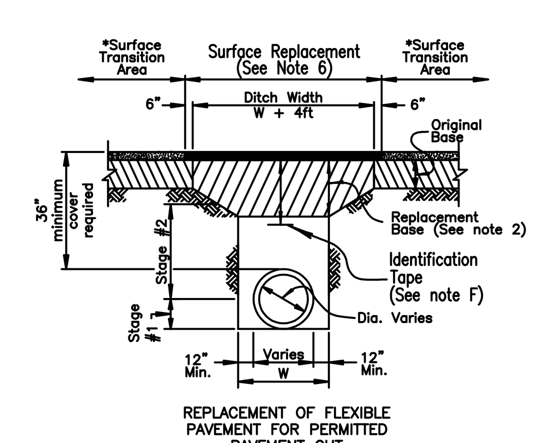

REPLACEMENT OF FLEXIBLE PAVEMENT FOR PERMITTED PAVEMENT CUT

CONSTRUCTION NOTES

1) BEDDING SHALL CONSIST OF IN-SITU GRANULAR MATERIAL OR WASHED AND GRADED LIMEROCK 3/8" – 7/8" SIZING WITH EQUAL OR GREATER STRUCTURAL ADEQUACY AS EXISTING. UNSUITABLE IN-SITU MATERIALS SUCH AS MUCK, DEBRIS AND LARGER ROCKS SHALL BE REMOVED.
2) REPLACED BASE MATERIAL OVER DITCH SHALL BE 16" MINIMUM FOR THOROUGHFARE PLAN ROADS.
3) ASPHALT CONCRETE PAVEMENT JOINTS SHALL BE MECHANICALLY SAWED AND BUTT-JOINTED.
4) BASE MATERIAL (PER ROADWAY PRODUCTION DESIGN STANDARDS) SHALL BE PLACED IN TWO OR THREE LAYERS (6" MAX. PER LAYER) AND EACH LAYER THOROUGHLY ROLLED OR TAMPED TO THE SPECIFIED DENSITY.
5) * SURFACE TRANSITION AREA (SEE PLANS FOR LOCATION). OVERLAY OR MILL/RESURFACE FOR A DISTANCE OF 50'ON BOTH SIDES OF THE OPEN CUT AND FOR A FULL LANE WIDTH.
6) 1" SIII ASPHALTIC CONCRETE OVER 1 1/2" SI ASPHALTIC CONCRETE WITH RC-70 PRIME COAT AT 0.10 GAL/SQ. YD.
7) PIPE SHALL BE PLACED IN A DRY TRENCH.

GENERAL NOTES

A) ALL ROADWAY REPAIR WORK SHALL BE PERFORMED IN CONFORMANCE WITH APPLICABLE FDOT STANDARD SPECIFICATIONS FOR ROAD AND BRIDGE CONSTRUCTION AND COUNTY PPM# EL-0-3605.
B) DENSITY TESTS SHALL BE TAKEN IN 1 FT LIFTS ABOVE THE PIPE AT INTERVALS OF 400 FT MAXIMUM (1 SET MINIMUM) OR AS DIRECTED BY THE CONSTRUCTION COORDINATION DIVISION. RESULTS SHALL BE SUBMITTED TO CONSTRUCTION COORDINATION DIVISION AS PART OF THEIR FIELD REVIEW.
C) ENGINEER-OF-RECORD WILL PROVIDE FULL-TIME INSPECTION DURING THE ENTIRETY OF THE OPEN-CUT OPERATION, BEGINNING WITH THE EXCAVATION AND CONTINUING THROUGH THE COMPLETION OF THE PAVING.
D) IF THE PAVEMENT IS NOT COMPLETELY RESTORED IMMEDIATELY FOLLOWING THE OPEN CUT, A SMOOTH TEMPORARY PATCH (MINIMUM 1.25" ASPHALT) SHALL BE INSTALLED, PROPERLY MATCHING THE EXISTING GRADING OF THE ROADWAY. THE TEMPORARY PATCH SHALL BE ALLOWED TO REMAIN IN PLACE AND BE MAINTAINED FOR A PERIOD NO LONGER THAN 45 DAYS. THE COUNTY RETAINS THE RIGHT TO USE POSTED SURETY TO COMPLETE ANY RESTORATION WORK THAT HAS NOT BEEN COMPLETED IN THE 45 DAYS PERIOD. ALTERNATIVE TEMPORARY TRENCH PROTECTION (STEEL PLATES OR OTHERS) MAY BE APPROVED BY THE CONSTRUCTION COORDINATION DIVISION.
E) THE FINAL RESTORATION, THE ROAD SHALL BE MILLED/RESURFACED FOR A FULL LANE WIDTH OF THE TRAVEL LANES ENCROACHED BY THE TRENCH AREA, INCLUDING A TRANSITION AREA OF 50 FT ON EACH SIDE OF THE TRENCH, THE PAVEMENT SHALL BE MILLED AND RESURFACED PER CONSTRUCTION NOTE 6.
F) APPROVED MAGNETIC TAPE IS REQUIRED FOR ALL MAIN PRESSURE PIPES AND CONDUIT IN THE COUNTY'S RIGHT-OF-WAY. INSTALL TAPE 24" BELOW FINISHED GRADE.
G) CONTINUOUS 4" WIDE PAINT STRIPING IS REQUIRED FOR DIP/PCCP WATER MAINS (BLUE), DIP SANITARY MAINS (GREEN), DIP RECLAIMED WATER MAINS (PURPLE), GAS MAINS (YELLOW), OR AS REQUIRED BY THE APWA.

OPEN CUT PIPE INSTALLATION THOROUGHFARE ROAD

7S

I. FORCE MAINS AND GRAVITY WASTEWATER MAINS WITHIN WELLFIELD PROTECTION ZONE

PRESSURE TEST PROCEDURE TO FOLLOW THE CURRENT AWWA C-600 STANDARD (150psi, (2) HOUR DURATION).

THERE SHALL BE NO PRESSURE DROP IN THE PIPE DURING THE TEST ("ZERO" FILL-UP TOLERANCE).

II. FORCE MAINS OUTSIDE OF WELLFIELD PROTECTION ZONE

MAXIMUM QUANTITY OF WATER (GALLONS PER HOUR) THAT MAY BE SUPPLIED TO MAINTAIN PRESSURE WITHIN 5 P.S.I. OF THE SPECIFIED TEST PRESSURE

(MECHANICAL OR PUSH-ON JOINT, 18 FT. NOMINAL LENGTHS, PER 1000 FT. OF PIPE)

AVG. TEST PRESSURE	PIPE DIAMETER (INCHES)															
PSI	2	3	4	6	8	10	12	14	16	18	20	24	30	36	42	48
150	0.10	0.14	0.18	0.27	0.37	0.46	0.55	0.64	0.73	0.83	0.92	1.10	1.38	1.65	1.93	2.20

FORMULA BASIS: $L = \frac{(S) \times (D) \times (P)^{1/2}}{148,000} \times 1/2$

L = MAXIMUM QUANTITY OF WATER TO BE ADDED (GALLONS PER HOUR)
S = LENGTH OF PIPE TESTED (FEET)
D = DIAMETER OF PIPE (INCHES)
P = TEST PRESSURE (P.S.I.)

NOTES:

1. TO OBTAIN THE MAXIMUM QUANTITY OF WATER FOR PIPE WITH 20 FT. NOMINAL LENGTHS, MULTIPLY THE QUANTITY CALCULATED FROM THE TABLE BY 0.9
2. THE MAXIMUM QUANTITY OF ADDED WATER FOR A PIPELINE IS CALCULATED BY MULTIPLYING THE QUANTITY PER HOUR AS OBTAINED FROM THE ABOVE TABLE, BY THE DURATION OF THE TEST IN HOURS,AND BY THE TOTAL LENGTH OF THE LINE BEING TESTED DIVIDED BY 1,000. IF THE LINE UNDER TEST CONTAINS SECTIONS OF VARIOUS DIAMETERS, THE MAXIMUM QUANTITY ADDED WILL BE THE SUM OF THE COMPUTED QUANTITIES FOR EACH SIZE.
3. MAXIMUM TEST LENGTH = 2,500 FEET PER SECTION.
4. THIS STANDARD SHALL REFLECT ANY REVISION OF A.W.W.A. C-600. HOWEVER, THE MAXIMUM QUANTITY OF WATER ADDED SHALL NOT EXCEED 50% OF THE RECOMMENDED LIMIT PER APPLICABLE AWWA C-600 STANDARD.
5. STANDARD TEST PRESSURE = 150 P.S.I.
6. PRESSURE TEST DURATION TO BE MIN. 2 HOURS.

PRESSURE TEST CRITERIA FOR GRAVITY WASTEWATER MAIN IN WELL FIELD & FORCE MAIN

10S

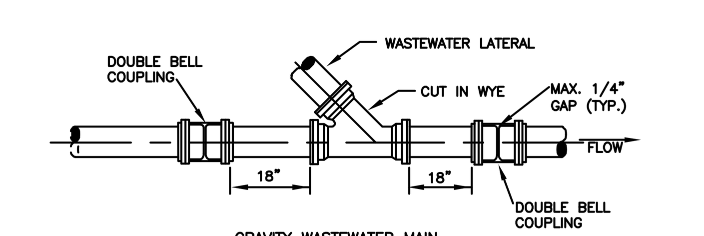

GRAVITY WASTEWATER MAIN

NOTE:

DUCTILE IRON FITTINGS (WYE, TEE, SLEEVES) ARE REQUIRED FOR DUCTILE IRON AND/OR C-900 PVC MAIN.

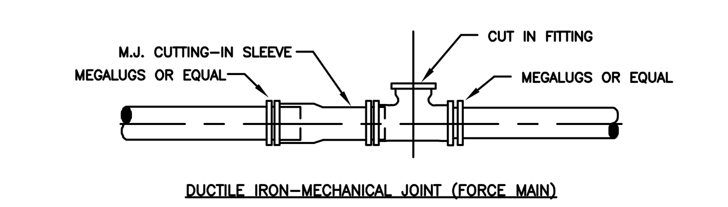

DUCTILE IRON-MECHANICAL JOINT (FORCE MAIN)

NOTE:

MEGALUGS OR EQUAL ARE REQUIRED THROUGHOUT ASSEMBLY.

WASTEWATER SYSTEM STANDARD CUT-IN DETAILS

9S

WASTEWATER #1 STANDARD DETAILS

CONSULTANT:

DESIGNED BY: WUD
DRAWN BY: M. BUCKNER
CHECKED BY: J.LAMMERT
APPROVED BY: WUD

Palm Beach County
Water Utilities Department
P.O.Box 16097
West Palm Beach, FL 33416-6097

PROJECT NO. 22-___

OXYGEN DEVELOPMENT

PALM BEACH COUNTY FLORIDA

PALM BEACH COUNTY
WATER UTILITIES DEPARTMENT
P.O. BOX 16097
WEST PALM BEACH, FL 33416
(561)493-6000

NO.	DATE	REVISION / REMARKS	BY
	JUNE 2019	* GENERAL REVISION	J.L.

STD DETAILS

SHEET NUMBER 19 OF 23

SEAL

SCOTT M. GINTERT, P.E.
FLORIDA P.E. #84228
Jul 21, 2022

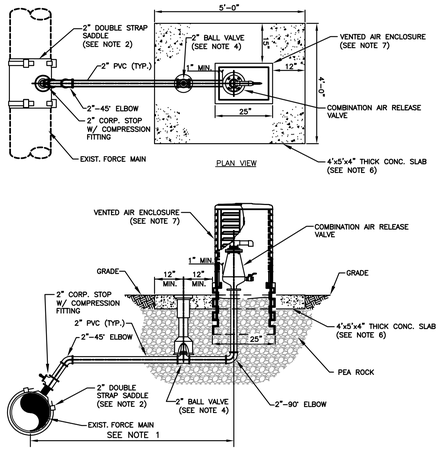

NOTES:

1. OFF-SET DISTANCE VARIES ON LOCATION OF FORCE MAIN TO ARV ENCLOSURE. IN NO CASE SHALL THE OFF-SET DISTANCE EXCEED 10' UNLESS OTHERWISE APPROVED BY THE DEPARTMENT PRIOR TO INSTALLATION.
2. 2" DOUBLE STRAP SADDLE TO BE INSTALLED ON A 45 DEGREE ANGLE IN THE DIRECTION OF THE OFF-SET ARV ENCLOSURE.
3. ALL PVC PIPING AND FITTINGS TO BE SCHEDULE 80.
4. 2" BALL VALVE AND CORPORATION STOP SHALL BE BRASS WITH COMPRESSION FITTINGS ON EACH END.
5. ALL FITTINGS AND VALVES SHALL BE COMPRESSION TYPE.
6. CONCRETE PAD FOR WATER METER ASSEMBLY SHALL BE 4" THICK WITH WIRE MESH (4"x4")
   CONCRETE PAD IS REQUIRED TO BE BROOM FINISHED.
7. VENTED ENCLOSURE SHALL BE CHANNELL COMPANY #SPH1420, SEE APPROVED MATERIALS AND EQUIPMENT LIST. ENCLOSURE SHALL BE CAPABLE OF ALLOWING THE SAME AMOUNT OF AIR FLOW AS THE ARV.
8. THIS FORCE MAIN OFF-SET ARV REQUIRES PREVIOUS DEPARTMENT APPROVAL PRIOR TO INSTALLATION.

FORCE MAIN AIR RELEASE VALVE W/ VENTED AIR ENCLOSURE

* 85S

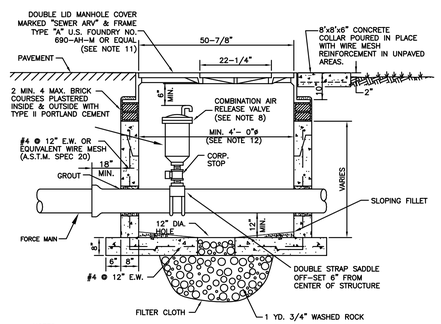

NOTES:

1. PRECAST 4000 P.S.I. TYPE II CONCRETE STRUCTURE. SHOP DRAWING IS REQUIRED TO BE APPROVED BY THE DEPARTMENT
2. ALL OPENINGS SHALL BE SEALED WITH A WATERPROOF NON-SHRINKING GROUT.
3. LIFT HOLES ARE PERMITTED.
4. ALL PIPE HOLES SHALL BE PRECAST.
5. MANHOLE FABRICATION SHALL BE IN ACCORDANCE WITH A.S.T.M. C-478 LATEST STANDARD.
6. COAT INSIDE WITH AN APPROVED PROTECTIVE CORROSION BARRIER SYSTEM.
7. CONCRETE COLLAR REQUIRED WHEN MANHOLE IS OUTSIDE OF PAVEMENT, SEE DETAIL.
8. COMBINATION AIR RELEASE VALVE (ARV) SHALL BE TYPE AND SIZE APPROPRIATE FOR SERVICE INTENDED. ALTHOUGH A 2" MINIMUM SIZED ARV IS REQUIRED ON FORCE MAIN INSTALLATIONS.
9. DUCTILE IRON PIPE IS REQUIRED THROUGH THE MANHOLE. NO PIPE JOINTS INSIDE THE MANHOLE.
10. THREADED AREAS OF CORPORATION STOP SHALL BE SPIRAL WRAPPED WITH TWO WRAPS OF TEFLON TAPE.
11. FORCE MAINS 12" AND SMALLER, AN ALTERNATIVE VAULT AND COVER DESIGN MAY BE USED PROVIDED ALTERNATE VAULT AND/OR COVER SHOP DRAWINGS WERE SUBMITTED AND APPROVED BY THE DEPARTMENT PRIOR TO THE VAULT AND/OR COVER BEING INSTALLED.
12. LARGER MANHOLES WILL BE REQUIRED FOR PIPES LARGER THAN 12"

PIPE SIZE	MIN. MANHOLE DIAMETER
16"-24"	60"
30"-42"	72"

13. MANHOLES IN ROADWAYS SHALL BE LOCATED OUTSIDE OF WHEEL PATHS.

FORCE MAIN AIR RELEASE VALVE AND MANHOLE IN PAVED AREAS AND ROAD R/W

* 40S

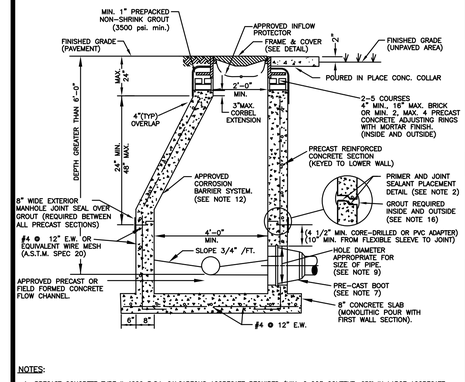

NOTES:

1. PRECAST CONCRETE TYPE II 4000 P.S.I. CALCAREOUS AGGREGATE REQUIRED (MIN. CaCO3 CONTENT: 65% IN LARGE AGGREGATE, 50% IN CONCRETE SCREENING).
2. INSTALL APPROVED JOINT SEALANT AT ALL RISER JOINTS WITH GROUT ON INSIDE AND OUTSIDE. MANHOLE SHOP DRAWINGS SHALL INCLUDE THE SIZE AND PLACEMENT OF JOINT SEALANT. AN APPROVED JOINT PRIMER SHALL BE APPLIED BY THE PRECASTER (TONGUE SECTION ONLY).
3. ALL OPENINGS SHALL BE SEALED WITH A WATERPROOF NON-SHRINKING GROUT.
4. FLOW CHANNELS SHALL BE PRECAST OR FIELD CONSTRUCTED TO DIRECT INFLUENT INTO FLOW STREAM. (SEE DETAIL)
5. LIFT HOLES ARE PERMITTED.
6. ALL PIPE HOLES SHALL BE PRECAST OR CORE - DRILLED.
7. A. FOR PVC PIPE ENTERING MANHOLE WITH PRECAST HOLES USE THE APPROVED. PRECASTED FLEXIBLE MANHOLE SLEEVE FOR THE APPROPRIATE PIPE DIAMETER AND DIMENSION RATIO. DOUBLE BANDING IS REQUIRED FOR FLEXIBLE MANHOLE SLEEVES.
   B. CONNECTION TO A MANHOLE WITH A CORE DRILLED HOLE SHALL BE MADE USING A 5" MIN. PVC C900 DR 18 AND THE APPROVED PVC-MANHOLE ADAPTER. THE ADAPTER SHALL NOT EXTEND MORE THAN 1"INTO THE MANHOLE.
   C. THE INSIDE AND OUTSIDE SPACE BETWEEN PIPE AND MANHOLE WALL SHALL BE FILLED WITH GROUT
8. INSIDE DROPS SHALL NOT BE DESIGNED TO EXCEED 1.80 FEET AND NOT CONSTRUCTED TO EXCEED 2.0 FEET. MAX. 6" INSIDE DROP IS PERMITTED FOR MANHOLES WITH 3 OR MORE INVERTS AND MANHOLES WITH A CHANGE IN FLOW DIRECTION OF MORE THAN 45 DEGREES.
9. 8" DIAMETER PIPE: 15" HOLE FOR PVC - 10" DIAMETER PIPE: 17" HOLE FOR PVC.
10. MANHOLE FABRICATION SHALL BE IN ACCORDANCE WITH ASTM C-478, LATEST STANDARD.
11. MINIMUM 5 FEET IS REQUIRED BETWEEN OUTSIDE OF MANHOLE AND A SERVICE WYE.
12. MANHOLES TO BE COATED INSIDE WITH AN APPROVED CORROSION BARRIER SYSTEM. SOLID THERMOPLASTIC CAST-IN LINER IS REQUIRED FOR LAST MANHOLE PRIOR TO LIFT STATION, MANHOLES DEEPER THAN 14 FT., MANHOLES WITH OUTSIDE DROP, AND MANHOLES WITH A FORCE MAIN CONNECTION. (SEE APPROPRIATE DETAILS)
13. APPROVED INFLOW PROTECTORS ARE REQUIRED.
14. MANHOLES IN ROADWAYS SHALL BE LOCATED OUTSIDE OF WHEEL PATHS.
15. SPECIAL PRE-APPROVED GROUT IS REQUIRED FOR PRECAST STRUCTURES WITH ANTIMICROBIAL ADMIXTURE.

STANDARD MANHOLE

13S

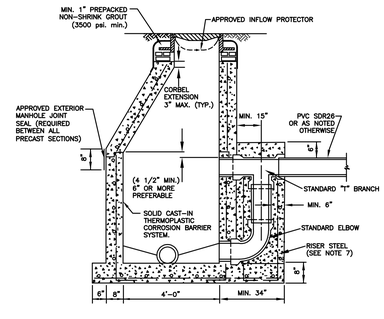

NOTES:

1. ALL DETAILS AND SPECIFICATIONS FOR STANDARD MANHOLES ARE APPLICABLE EXCEPT FOR REFERENCES TO DROP ASSEMBLY AND CAST IN LINERS.
2. THE PRECAST BASE SHALL EXTEND FULLY UNDER THE DROP ASSEMBLY.
3. MASONRY CONSTRUCTION ABOVE THE EXTENDED PRECAST BASE, IF FILLED WITH CONCRETE, IS PERMISSIBLE
4. BRICK AND CONCRETE RUBBLE ARE PERMITTED AS FILLER IN DROP ENCASEMENT.
5. DROP CONNECTIONS SHALL BE REQUIRED WHENEVER AN INFLUENT INVERT IS LOCATED 2.0 FEET OR MORE ABOVE THE MAIN INVERT CHANNEL. DROP CONNECTIONS SHOULD NOT BE DESIGNED FOR LESS THAN A 2.4 FOOT DROP.
6. PVC SDR 26 PIPE WITH PVC SDR 35 FITTINGS SHALL BE UTILIZED IN THE DROP ASSEMBLY.
7. RISER STEEL TO BE CAST IN PLACE WITH BASE (4 RODS) OR USE 4 - 1/2" DIA. COIL LOOP INSERTS CAST IN PLACE WITH BASE (TO BE USED WITH 1/2" COIL RODS). COIL LOOP INSERTS TO BE "DAYTON SUPERIOR" B16, 1/2"X 4" OR APPROVED EQUAL.

DROP CONNECTION PRECAST MANHOLE

15S

GENERAL NOTES

DEFINITIONS

1. DEPARTMENT – THE PALM BEACH COUNTY WATER UTILITIES DEPARTMENT.
2. CONTRACTOR – UTILITY CONTRACTOR AND ALL UTILITY SUBCONTRACTORS.
3. ENGINEER – ENGINEER RESPONSIBLE FOR INSPECTION AND CERTIFICATION.

PROCEDURE

1. A PRE-CONSTRUCTION MEETING IS TO BE HELD PRIOR TO DELIVERY OF MATERIALS AND INITIATION OF ANY POTABLE WATER, RECLAIMED WATER AND/OR WASTEWATER SYSTEM CONSTRUCTION. THE MEETING SHALL BE ATTENDED BY THE DEPARTMENT, CONTRACTOR, ENGINEER AND OTHER INTERESTED PARTIES.
2. ANY REVISIONS TO THE APPROVED PLANS SHALL BE CALLED TO THE ATTENTION OF THE DEPARTMENT PRIOR TO THE PRE-CONSTRUCTION MEETING. REVISED PLANS MUST BE APPROVED PRIOR TO THE MEETING.
3. FIVE (5) COPIES OF THE CURRENT APPROVED MATERIAL LIST AND ALL NECESSARY SHOP DRAWINGS SHALL BE SUBMITTED FOR APPROVAL PRIOR TO SCHEDULING OF THE PRE-CONSTRUCTION MEETING.
4. ALL APPLICABLE PERMITS MUST BE OBTAINED PRIOR TO PRECONSTRUCTION MEETING. (DOT, HEALTH DEPARTMENT, COUNTY ENGINEER, ETC.).
5. THE CONTRACTOR SHALL MAINTAIN A CURRENT APPROVED SET OF CONSTRUCTION PLANS ON JOB SITE.
6. ALL MATERIALS SUPPLIED SHALL CONFORM TO PRODUCT LIST AND SHOP DRAWINGS AS APPROVED PRIOR TO CONSTRUCTION. SUBSTITUTE MATERIALS SHALL NOT BE APPROVED AFTER DELIVERY TO THE JOB SITE. ALL REQUESTS FOR MATERIAL SUBSTITUTION SHALL BE APPROVED PRIOR TO DELIVERY OF THESE MATERIALS TO THE JOB SITE.
7. THE LOCATIONS OF EXISTING UTILITIES SHOWN ON THE APPROVED PLANS ARE TO BE VERIFIED IN THE FIELD BY THE CONTRACTOR. APPROVAL OF DEVELOPMENT PLANS BY THE DEPARTMENT IN NO WAY IMPLIES VERIFICATION OF THE ACCURACY OF THOSE PLANS OR FEATURES DEPICTED THEREON. ANY DISCREPANCY IN OR VARIATION FROM THE APPROVED PLANS IS TO BE BROUGHT TO THE ATTENTION OF THE DEPARTMENT BY THE ENGINEER AND CONTRACTOR. THE CONTRACTOR SHALL CONFIRM AND INSTALL (IF NECESSARY) ADEQUATE MECHANICAL PIPE / JOINT RESTRAINT ON EXISTING PIPES PRIOR TO CONNECTION.
8. THE CONTRACTOR SHALL BE RESPONSIBLE AT ALL TIMES THROUGHOUT THE DURATION OF CONSTRUCTION FOR THE PROTECTION OF EXISTING AND NEWLY INSTALLED UTILITIES FROM DAMAGE OR DISRUPTION OF SERVICE. THE CONTRACTOR SHALL BE RESPONSIBLE FOR TAKING SUCH MEASURES AS NECESSARY TO PROTECT THE HEALTH, SAFETY AND WELFARE OF THOSE PERSONS HAVING ACCESS TO THE WORK SITE.
9. THE CONTRACTOR SHALL BE RESPONSIBLE FOR OBTAINING LOCATIONS FROM ALL OTHER UTILITY FACILITIES.
10. THE CONTRACTOR OR ENGINEER SHALL SCHEDULE INSPECTIONS AND TESTS A MINIMUM OF 24-48 HOURS IN ADVANCE.
11. NO CONNECTION TO OR ANY OTHER CONSTRUCTION SHALL BE PERFORMED ON AN EXISTING DEPARTMENT OWNED OR MAINTAINED MAIN OR STRUCTURE WITHOUT THE PRESENCE OF A DEPARTMENT INSPECTOR.
12. FACILITIES PROPOSED HEREIN SHALL BE CONSTRUCTED IN ACCORDANCE WITH THE APPROVED PLANS AND THE DEPARTMENT'S MINIMUM STANDARDS. CONFLICTS BETWEEN THE PRECEDING DOCUMENTS SHOULD BE CALLED TO THE ATTENTION OF THE DEPARTMENT FOR RESOLUTION. DEVIATIONS FROM THE APPROVED PLANS MUST BE APPROVED IN ADVANCE BY THE DEPARTMENT.
13. UPON COMPLETION OF CONSTRUCTION, A FINAL INSPECTION SHALL VERIFY PROPER ADHERENCE TO ALL FACETS OF THE PLANS AND SPECIFICATIONS.

PRESSURE PIPE NOTES

1. THERE SHALL BE 36" MINIMUM COVER FROM FINISHED GRADE TO TOP OF PIPE.
2. DUCTILE IRON PIPE (DIP) THICKNESS SHALL CONFORM TO THE DEPARTMENT'S APPROVED MATERIAL LIST. POTABLE WATER AND RECLAIMED WATER MAINS DIP SHALL BE CEMENT LINED. FORCE MAIN DIP SHALL BE CERAMIC EPOXY LINED.
3. PVC PRESSURE PIPE SHALL BE C-900, SDR-18, 150 PSI.
4. ALL FITTINGS SHALL BE DUCTILE IRON WITH MECHANICAL JOINTS AND CEMENT OR APPROVED EPOXY LINING.
5. POTABLE WATER, RECLAIMED WATER AND WASTEWATER FORCE MAIN VALVES 10 INCHES AND SMALLER SHALL BE RESILIENT SEAT GATE VALVES. TWELVE-INCH (12") OR LARGER FORCE MAIN VALVES SHALL BE RESILIENT SEAT GATE VALVES OR ECCENTRIC PLUG VALVES (IF APPROVED IN ADVANCE BY MAINTENANCE). POTABLE WATER AND RECLAIMED WATER MAIN VALVES LARGER THAN 10 INCHES SHALL BE BUTTERFLY VALVES.
6. ALL TRENCHING, PIPE-LAYING, BACKFILL, PRESSURE TESTING, AND DISINFECTION MUST COMPLY WITH ALL APPLICABLE FEDERAL, STATE, COUNTY AND HEALTH DEPARTMENT STANDARDS AND REGULATIONS.

GRAVITY SEWER NOTES

1. MANHOLES AND OTHER CASTINGS SHALL BE INSPECTED BY THE DEPARTMENT BEFORE PLACEMENT AND BEFORE APPLICATION OF THE CORROSION BARRIER SYSTEM (IF APPLICABLE).
2. ALL OPENINGS IN PRECAST MANHOLES SHALL BE CAST AT TIME OF MANUFACTURE OR CORED IN FIELD.
3. ALL MANHOLES SHALL BE SET PLUMB TO LINE AND GRADE, AND SHALL REST ON A FIRM, CAREFULLY GRADED SUBGRADE, WHICH SHALL PROVIDE UNIFORM BEARING UNDER BASE.
4. PVC WASTEWATER GRAVITY PIPE SHALL CONFORM TO ASTM D-3034, SDR 26 WITH PVC SDR 35 FITTINGS, OR PVC C-900 SDR 18, PIPE AND FITTINGS, WITH PUSH-ON RUBBER GASKET JOINTS.
5. D.I.P GRAVITY SEWER PIPE SHALL BE PRESSURE CLASS 350, EPOXY LINED.
6. THE COMPLETED GRAVITY WASTEWATER SYSTEM SHALL BE INSPECTED BY THE DEPARTMENT TO VERIFY ALIGNMENT AND INTEGRITY. THERE SHALL BE NO LEAKAGE. ALL MAINS SHALL BE LAMPED, SHOWING A FULL CIRCLE OF LIGHT. DURING THESE INSPECTIONS, THE MAIN SHALL BE CLEAN AND DRY.

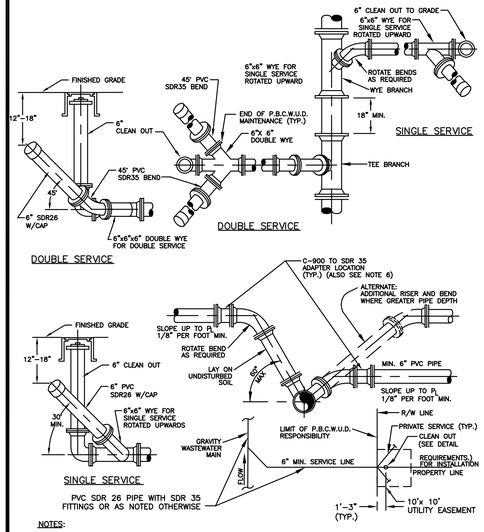

NOTES:

1. MIN. 3' AND 5' MAX. DEPTH IS REQUIRED, UNLESS PLANS SHOW OTHERWISE, FOR SERVICE LATERAL WYE AT THE CLEAN OUT ENDING P.B.C.W.U.D. OWNERSHIP AND MAINTENANCE RESPONSIBILITY.
2. CLEAN OUT IS TO BE INSTALLED PER DEPARTMENT STANDARDS PRIOR TO WATER METER INSTALLATION.
3. WASTEWATER MAIN WYE BRANCH TO MATCH MAIN PIPE MATERIAL.
4. CLEAN OUTS DESIGNATING THE END OF THE DEPARTMENT'S MAINTENANCE RESPONSIBILITY SHALL BE LOCATED WITHIN AN UTILITY EASEMENT OR RIGHT-OF WAY DEDICATED FOR UTILITIES.
5. THE DEVELOPER/PROPERTY OWNER OR ASSIGNEE SHALL BE RESPONSIBLE FOR CLEAN OUT INSTALLATION PRIOR TO WATER METER INSTALLATION AS SPECIFIED BY THE DEPARTMENT.
6. SEE MINIMUM SEPARATION STATEMENT FOR P.V.C. C-900 SDR 18 PIPE MATERIAL REQUIREMENTS AT WASTEWATER LATERAL/POTABLE WATER MAIN CROSSINGS.
7. ALONG STREETS WITH ADJACENT NON-EXCLUSIVE UTILITY EASEMENT, THE CLEANOUT ENDING PBCWUD MAINTENANCE RESPONSIBILITY SHALL BE INSTALLED 1'-3" INTO THE UTILITY EASEMENT.
8. MIN. 3' HORIZONTAL SEPARATION MUST BE MAINTAINED BETWEEN CLEANOUTS AND EDGE OF PAVEMENT, BACK OF CURB, EDGE OF DRIVEWAY, LIGHTPOLES, TRANSFORMERS, POWER POLES.

TYPICAL WASTEWATER SERVICE CONNECTION

12S

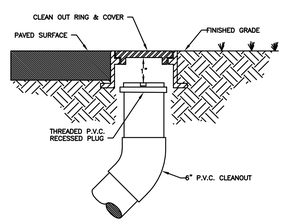

NOTES:

1. CLEANOUTS TO BE LOCATED IN GRASS AREA WHENEVER POSSIBLE, MIN. 3' FROM EDGE OF PAVEMENT, BACK OF CURB, EDGE OF DRIVEWAY, LIGHT POLES, TRANSFORMERS, OR POWER POLES.
2. CLEANOUTS SHALL NOT BE INSTALLED IN TRAFFIC LANES OR AREAS UNDER HEAVY TRAFFIC LOADS.
3. THE COVER TO BE MARKED "S".
4. CLEANOUTS TO BE INSTALLED PRIOR TO WATER METER RELEASE.
5. THE DEVELOPER/PROPERTY OWNER OR ASSIGNEE SHALL BE RESPONSIBLE FOR CLEANOUT INSTALLATION PRIOR TO WATER METER INSTALLATION AS SPECIFIED BY THE DEPARTMENT.
6. A CONCRETE COLLAR MAY BE REQUIRED IF CLEANOUT IS LOCATED BETWEEN DRIVEWAYS. A SPECIAL CONSTRUCTION DETAIL WILL BE REQUIRED.
7. ALONG STREETS WITH ADJACENT NON-EXCLUSIVE UTILITY EASEMENTS, THE CLEANOUTS ENDING PBCWUD MAINTENANCE RESPONSIBILITY SHALL BE INSTALLED MIN. 12", MAX. 18" INTO THE EASEMENT.

TYPICAL CLEANOUT INSTALLATION

11S

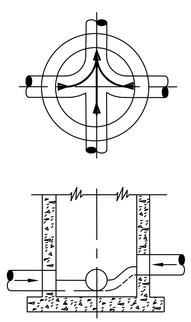

NOTES:

1. PROPERLY SHAPED INVERT CHANNELS AND SPILLWAYS SHALL BE CONSTRUCTED BETWEEN PIPES WITH DIFFERENT INVERT ELEVATIONS TO PROVIDE FOR SMOOTH FLOWS.
2. SERVICE LATERALS SHALL NOT ENTER MANHOLES UNLESS SPECIFIED ON PLANS AND THEN MUST BE TREATED AS MAINS (ELEVATIONS SHOWN, PRECAST HOLE, FLOW CHANNEL)
3. APPROVED PRECAST POLYPROPYLENE OR FIBER REINFORCED POLYMER (FRP) FLOW CHANNELS WITH INTEGRATED PIPE INVERTS (SEE SEPARATE DETAILS), PRECAST CONCRETE FLOW CHANNELS, OR FIELD INSTALLED CONCRETE FLOW CHANNELS ARE REQUIRED.
4. SIDEWALLS OF FLOW CHANNELS SHALL BE AT LEAST HALF OF PIPE HEIGHT AT ALL POINTS.
5. NO INSIDE DROP LARGER THAN 6" SHALL BE ALLOWED WITH 3 OR 4 INVERTS AND MANHOLES WITH A CHANGE OF DIRECTION OF FLOW OF MORE THAN 45 DEGREES.
6. THE FIELD APPLIED CORROSION BARRIER SYSTEM SHALL BE INSTALLED AFTER INVERT CHANNEL CONSTRUCTION UNLESS PRECAST THERMOPLASTIC BASELINER IS USED. THE FIELD APPLIED CORROSION BARRIER MAY NOT BE APPLIED TO THE FLOW CHANNEL.

INVERT FLOW CHANNELS

16S

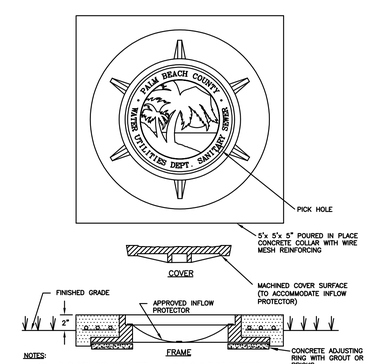

NOTES:

1. COLLAR IS REQUIRED ONLY WHEN MANHOLE IS OUT OF PAVEMENT.
2. STANDARD FRAME AND COVER SIZE SHALL BE SEVEN INCHES (7"). A 4" FRAME MAY ONLY BE USED WITH PRIOR APPROVAL.
3. A STEEL MANHOLE RISER, APPROVED PRECAST CONCRETE ADJUSTING RINGS OR ADDITIONAL BRICKS MAY BE USED TO ELEVATE EXISTING MANHOLE COVERS TO RESURFACED GRADE (MAX. 4" HEIGHT).
4. COVER SHALL FIT FLUSH WITH THE FRAME WITH THE INFLOW PROTECTOR INSTALLED.

GRAVITY SEWER MANHOLE FRAME & COVER

17S

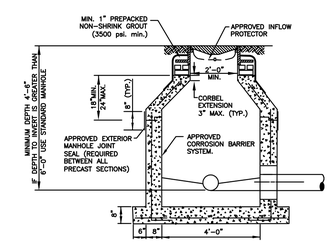

NOTE:

ALL STANDARD MANHOLE NOTES AND DETAILS ARE APPLICABLE.

SHALLOW MANHOLE

14S

WASTEWATER #2 STANDARD DETAILS

CONSULTANT:

DESIGNED BY: WUD
DRAWN BY: M. BUCKNER
CHECKED BY: J. LAMMERT
APPROVED BY: WUD

Palm Beach County
Water Utilities Department
P.O.Box 16097
West Palm Beach, FL 33416-6097

PROJECT NO. 22-____

OXYGEN DEVELOPMENT

PALM BEACH COUNTY
WATER UTILITIES DEPARTMENT
P.O. BOX 16097
WEST PALM BEACH, FL 33416
(561)493-6000

NO.	DATE	REVISION / REMARKS	BY
	JUNE 2019	GENERAL REVISION	JLL

STD DETAILS

SHEET NUMBER 20 OF 23

SEAL

SCOTT M. GINTERT, P.E.
FLORIDA P.E. #84289
Jul 21, 2022

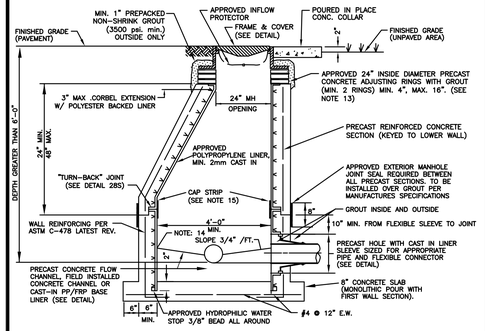

NOTES:

1. PRECAST CONCRETE TYPE II 4000 P.S.I. CALCAREOUS AGGREGATE REQUIRED (MIN. CaCO3 CONTENT: 65% IN LARGE AGGREGATE, 50% IN CONCRETE SCREENING).
2. APPROVED PRIMER AND SEALANT GASKET AT ALL RISER JOINTS. SEALANT GASKET SIZE AND PLACEMENT SHALL BE CALLED OUT ON SHOP DRAWINGS. PRIMER TO BE APPLIED BY THE PRECASTER (TONGUE SECTION ONLY).
3. ALL PIPE OPENINGS SHALL BE GAS TIGHT AND WATER TIGHT WITH NO EXPOSED CONCRETE SURFACES.
4. CAST OPENINGS SHALL BE MANUFACTURED WITH A POLYPROPYLENE SLEEVE CAST IN. APPROVED FLEXIBLE MANHOLE CONNECTORS SHALL BE USED AT PIPE CONNECTIONS. HOLE SIZE PER BOOT MANUFACTURER'S SPECIFICATIONS. DOUBLE PIPE CLAMPS MUST BE INSTALLED ON FLEXIBLE SLEEVES WHERE REQUIRED BY BOOT MANUFACTURERS INSTALLATION INSTRUCTIONS.
5. CORED PIPE OPENINGS SHALL BE INSTALLED PER DETAIL. APPROVED FLEXIBLE CONNECTOR WILL BE INSTALLED ONTO POLY-PROPYLENE WALL SLEEVE. WALL SLEEVE SHALL BE EPOXIED INTO CORED OPENING AND THERMAL WELDED TO WALL LINER.
6. FLOW CHANNELS SHALL BE CONSTRUCTED TO DIRECT INFLUENT INTO FLOW STREAM. APPROVED CAST-IN PP/FRP BASE LINER IS ACCEPTABLE (SEE DETAIL).
7. LIFT HOLES ARE PERMITTED.
8. INSIDE DROPS SHALL NOT BE DESIGNED TO EXCEED 1.80 FEET AND NOT CONSTRUCTED TO EXCEED 2.0 FEET. MAX. 6" INSIDE DROP IS PERMITTED FOR MANHOLES WITH 3 OR MORE INVERTS AND MANHOLES WITH A CHANGE IN FLOW DIRECTION OF MORE THAN 45 DEGREES.
9. MANHOLE FABRICATION SHALL BE IN ACCORDANCE WITH ASTM C-478, LATEST STANDARD.
10. MINIMUM 5 FEET IS REQUIRED BETWEEN OUTSIDE OF MANHOLE AND SERVICE WYE OR ANY PIPE JOINT.
11. ONLY APPROVED THERMOPLASTIC LINER SYSTEM SHALL BE USED. LINERS MUST BE WELDED BY LINER MFG CERTIFIED WELDERS AND BE CAST INTO THE MANHOLE BY A LINER MANUFACTURER CERTIFIED PRECASTER.
12. APPROVED INFLOW PROTECTORS ARE REQUIRED.
13. MAXIMUM HEIGHT OF CHIMNEY SHALL NOT EXCEED 24" (INCLUDING FRAME CASTING).
14. SEAL INVERT BENCH AND CHANNEL TO WALL LINER WITH 3M WEATHERBAN 5354 SEALANT TAPE OR APPROVED EQUAL.
15. MIN. 4" WIDE FIELD WELDED CAP STRIP IS REQUIRED FOR ALL JOINTS.
16. SOLID THERMOPLASTIC CAST-IN LINER IS REQUIRED FOR LAST MANHOLE PRIOR TO LIFT STATION. MANHOLES DEEPER THAN 14 FT., MANHOLES WITH OUTSIDE DROP, AND MANHOLES WITH A FORCE MAIN CONNECTION. (SEE APPROPRIATE DETAILS)
17. MANHOLES IN ROADWAYS SHALL BE LOCATED OUTSIDE OF WHEEL PATHS.

STANDARD MANHOLE WITH CAST-IN LINER 18S

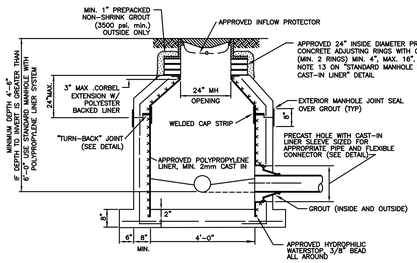

NOTES:

1. ALL "STANDARD MANHOLE WITH POLYPROPYLENE LINER SYSTEM" NOTES AND DETAILS ARE APPLICABLE.
2. SEAL INVERT BENCH AND CHANNEL TO WALL LINER WITH 3M WEATHERBAN 5354 SEALANT TAPE (OR APPROVED EQUAL).
3. SEE SEPARATE DETAIL FOR OPTIONAL CAST-IN POLYPROPYLENE OR FIBER REINFORCED POLYMER BASE LINER.

SHALLOW MANHOLE WITH CAST-IN LINER 19S

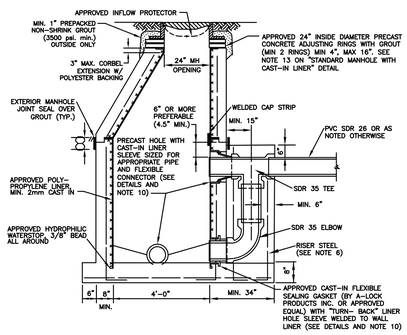

NOTES:

1. ALL DETAILS AND SPECIFICATIONS FOR "STANDARD MANHOLE WITH SOLID POLYPROPYLENE LINER SYSTEM" ARE APPLICABLE EXCEPT FOR REFERENCES TO DROP ASSEMBLY.
2. THE PRECAST BASE SHALL EXTEND FULLY UNDER THE DROP ASSEMBLY.
3. PRECAST DROP ENCASEMENT REQUIRED UP TO TOP EDGE OF 90 DEGREE ELBOW, BRICK AND CONCRETE RUBBLE ARE PERMITTED AS FILLER IN REMAINDER OF DROP ENCASEMENT.
4. DROP CONNECTIONS SHALL BE REQUIRED WHENEVER AN INFLUENT INVERT IS LOCATED 2.0 FEET OR MORE ABOVE THE MAIN INVERT CHANNEL. DROP CONNECTIONS SHOULD NOT BE DESIGNED FOR LESS THAN A 2.4 FOOT DROP.
5. PVC SDR 26 PIPE WITH PVC SDR 35 FITTINGS SHALL BE UTILIZED IN THE DROP ASSEMBLY.
6. DROP ENCASEMENT REINFORCING STEEL TO BE CAST IN PLACE WITH BASE (4 RODS) OR USE 4-1/2" DIA. COIL LOOP INSERTS CAST IN PLACE WITH BASE (TO BE USED WITH 1/2" COIL RODS). COIL LOOP INSERTS TO BE "DAYTON SUPEROR" B16, 1/2"X 4" OR APPROVED EQUAL.
7. MIN. 4" WIDE FIELD WELDED CAP STRIP IS REQUIRED OVER ALL JOINTS.
8. SEAL INVERT BENCH AND CHANNEL TO WALL LINER WITH 3M WEATHERBAN 5354 SEALANT TAPE (OR APPROVED EQUAL).
9. SEE SEPARATE DETAIL FOR OPTIONAL CAST-IN POLYPROPYLENE OR FIBER REINFORCED POLYMER BASE LINER.

OUTSIDE DROP MANHOLE WITH CAST-IN LINER 20S

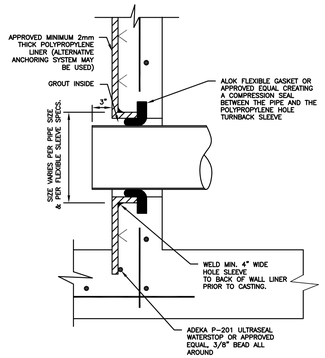

PIPE TO DROP MANHOLE CONNECTION LOWER INVERT 25S

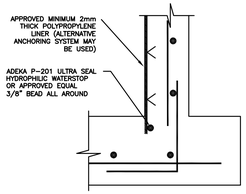

NOTE:

THIS STYLE WATERSTOP IS USED ON STRUCTURES CAST WITH A MONOLITHICALLY POURED BOTTOM SLAB.

BASE MANHOLE SECTION WATERSTOP DETAIL 26S

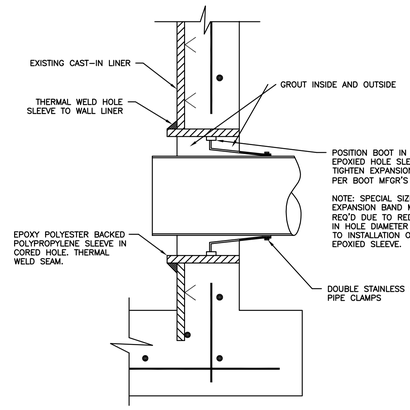

NOTE:
THERMAL WELDING AND EPOXY OF THE SLEEVE TO BE PERFORMED BY A CONTRACTOR CERTIFIED BY THE LINER MANUFACTURER

CORED HOLE W/FLEX. CONNECTOR & TURNBACK SLEEVE POLYPROPYLENE LINER SYSTEM CAST-IN 24S

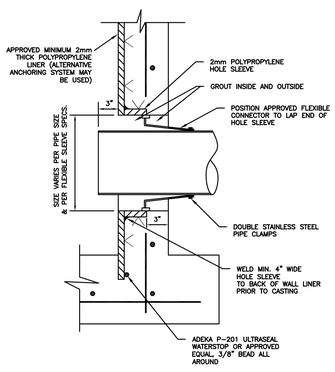

PIPE TO MANHOLE CONNECTION – TYPE "A" 21S

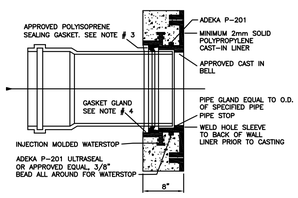

INSTALLATION:
1) CLEAN BELL
2) INSTALL GASKET AS SHOWN
3) LUBRICATE PIPE SPIGOT AND SLIDE INTO BELL AND GASKET UNTIL REACHING PIPESTOP
4) CHECK FOR WATERTIGHT CONNECTION

DO NOT LUBRICATE THE GASKET OR THE BELL

NOTES:
1) MANHOLE SHOP DRAWINGS SHALL IDENTIFY THE TYPE OF MANHOLE/PIPE CONNECTION.
2) MANHOLE SHOP DRAWINGS SHALL IDENTIFY THE PIPE SIZE, TYPE, GASKET TYPE, AND HOLE SIZE.
3) ONLY THE POLYISOPRENE GASKET SUPPLIED BY THE BELL MANUFACTURER SHALL BE USED IN COMPRESSION TYPE BELLS.
4) GASKET GLAND VARIES ACCORDING TO PIPE SIZE AND TYPE.
5) HOLE SLEEVES AND BELL CONNECTORS SHALL EXTEND TO THE OUTER PROFILE OF THE CONCRETE STRUCTURE AT MINIMUM PROVIDING A COMPLETELY LINED SURFACE WHERE THE GASKET AND HOLE LINER MATE TOGETHER.

CAST-IN BELL WITH COMPRESSION SEAL GASKET

PIPE TO MANHOLE CONNECTION – TYPE "B" 22S

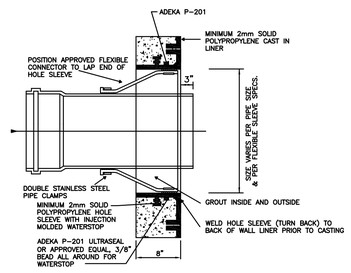

INSTALLATION:
1) CLEAN BOOT HUB
2) INSTALL RUBBER BOOT CONNECTOR (PER MANUFACTURER'S INSTRUCTIONS).
3) LUBRICATE PIPE SPIGOT AND SLIDE INTO RUBBER BOOT CONNECTOR.
4) TIGHTEN RUBBER BOOT CLAMPS (PER MANUFACTURER'S INSTRUCTIONS)
5) SECURE AND BACKFILL WITH PROPER MATERIAL AS SPECIFIED
6) CHECK FOR WATERTIGHT CONNECTION

DO NOT LUBRICATE THE BOOT CONNECTOR OR THE BOOT HUB

NOTES:
1) MANHOLE SHOP DRAWINGS SHALL IDENTIFY THE TYPE OF MANHOLE/PIPE CONNECTION.
2) MANHOLE SHOP DRAWINGS SHALL IDENTIFY THE PIPE SIZE, TYPE, GASKET TYPE, AND HOLE SIZE.
3) ONLY THE POLYISOPRENE GASKET SUPPLIED BY THE BELL MANUFACTURER SHALL BE USED IN COMPRESSION TYPE BELLS.
4) GASKET GLAND VARIES ACCORDING TO PIPE SIZE AND TYPE.
5) HOLE SLEEVES AND BELL CONNECTORS SHALL EXTEND TO THE OUTER PROFILE OF THE CONCRETE STRUCTURE AT MINIMUM PROVIDING A COMPLETELY LINED SURFACE WHERE THE GASKET AND HOLE LINER MATE TOGETHER.

TURN BACK BOOT HUB WITH BOOT CONNECTOR

PIPE TO MANHOLE CONNECTION – TYPE "C" 23S

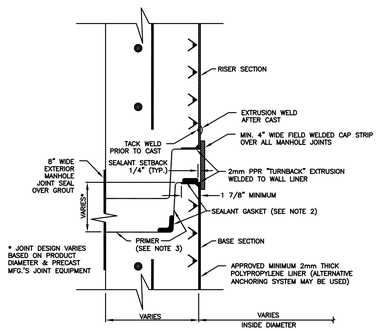

NOTES:

1. LINER WELDING SHALL BE PERFORMED EXCLUSIVELY BY LICENSED, CERTIFIED WELDERS.
2. STRUCTURE SHOP DRAWINGS SHALL CALL OUT THE SIZE, TYPE AND PLACEMENT OF THE JOINT SEALANT.
3. JOINT PRIMER TO BE APPLIED BY THE PRECASTER (TONGUE SECTION ONLY).

TURN BACK JOINT INSTALLED PRIOR TO CAST 27S

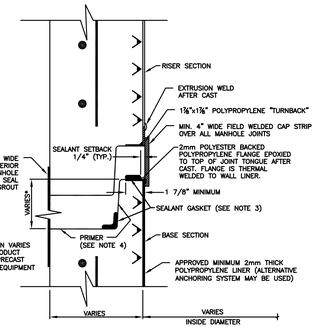

NOTES:

1. THE "AFTER CAST" "TURNBACK" JOINT IS USED WHEN THE "PRIOR TO CAST" "TURNBACK" JOINT IS NOT FEASIBLE.
2. LINER WELDING SHALL BE PERFORMED EXCLUSIVELY BY LICENSED, CERTIFIED WELDERS.
3. STRUCTURE SHOP DRAWINGS SHALL CALL OUT THE SIZE, TYPE AND PLACEMENT OF THE JOINT SEALANT.
4. JOINT PRIMER TO BE APPLIED BY THE PRECASTER (TONGUE SECTION ONLY).

TURN BACK JOINT INSTALLED AFTER CAST 28S

WASTEWATER #3
STANDARD DETAILS

CONSULTANT:

DESIGNED BY: WUD
DRAWN BY: M. BUCKNER
CHECKED BY: J. LAMMERT
APPROVED BY: WUD

Palm Beach County
Water Utilities Department
P.O.Box 16097
West Palm Beach, FL 33416-6097

PROJECT NO.
22-___

OXYGEN DEVELOPMENT

PALM BEACH COUNTY
WATER UTILITIES DEPARTMENT
P.O. BOX 16097
WEST PALM BEACH, FL 33416
(561)493-6000

NO.	DATE	REVISION / REMARKS	BY
	JUNE 2019	GENERAL REVISION	J.L.

STD DETAILS

SHEET NUMBER
21
OF
23

SEAL

SCOTT M. GINTERT, P.E.
FLORIDA P.E. #84228
Jul 21, 2022

Drawing: W:\Projects\2022\22-006_Oxygen Development\CAD\WUD 2019 STD DTLS - WASTEWATER (5 SHTS).dwg\WUD WW-3 - Last Modified: Thu, Jul 21, 2022 - 11:14am

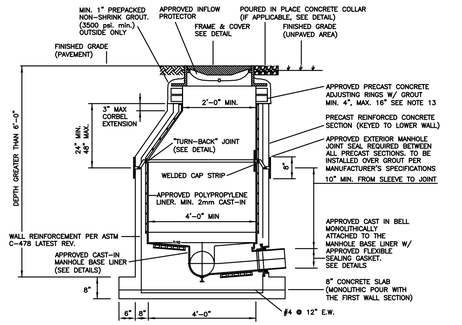

NOTES:

1. PRECAST CONCRETE TYPE II 4000 P.S.I. CALCAREOUS AGGREGATE REQUIRED (MIN. CaCO3 CONTENT: 65% IN LARGE AGGREGATE, 50% IN CONCRETE SCREENING).
2. RUB'R NEX (RU 106) OR APPROVED EQUAL AT ALL RISER JOINTS. SIZES TO BE SPECIFIED ON SHOP DRAWINGS.
3. ALL PIPE OPENINGS SHALL BE GAS TIGHT AND WATER TIGHT WITH NO EXPOSED CONCRETE SURFACES.
4. CAST OPENINGS SHALL BE MANUFACTURED WITH A POLYPROPYLENE SLEEVE CAST IN. APPROVED FLEXIBLE MANHOLE CONNECTORS SHALL BE USED AT PIPE CONNECTIONS. HOLE SIZE PER BOOT MANUFACTURER'S SPECIFICATIONS. DOUBLE PIPE CLAMPS MUST BE INSTALLED ON FLEXIBLE SLEEVES WHERE REQUIRED BY BOOT MANUFACTURER'S INSTALLATION INSTRUCTIONS.
5. CORED PIPE OPENINGS SHALL BE INSTALLED PER DETAIL. APPROVED FLEXIBLE CONNECTOR WILL BE INSTALLED ONTO POLY-PROPYLENE WALL SLEEVE. WALL SLEEVE SHALL BE EPOXIED INTO CORED OPENING AND THERMAL WELDED TO WALL LINER. BY LICENSED CONTRACTOR.
6. FLOW CHANNELS SHALL DIRECT INFLUENT INTO FLOW STREAM. (SEE DETAIL)
7. LIFT HOLES ARE PERMITTED.
8. INSIDE DROPS SHALL NOT BE DESIGNED TO EXCEED 1.80 FEET AND NOT CONSTRUCTED TO EXCEED 2.0 FEET. MAX. 6" INSIDE DROP IS PERMITTED FOR MANHOLES WITH 3 OR MORE INVERTS AND MANHOLES WITH A CHANGE IN FLOW DIRECTION OF MORE THAN 45 DEGREES.
9. MANHOLE FABRICATION SHALL BE IN ACCORDANCE WITH ASTM C-478, LATEST STANDARD.
10. MINIMUM 5 FEET IS REQUIRED BETWEEN OUTSIDE OF MANHOLE AND SERVICE WYE.
11. MANHOLES SHALL BE LINED INSIDE WITH AN APPROVED POLYPROPYLENE LINER SYSTEM. LINERS MUST BE WELDED BY LINER MFG CERTIFIED WELDERS AND BE CAST INTO THE MANHOLE BY A LINER MANUFACTURER CERTIFIED PRECASTER.
12. APPROVED INFLOW PROTECTORS ARE REQUIRED.
13. MAXIMUM HEIGHT OF CHIMNEY SHALL NOT EXCEED 24" (INCLUDING FRAME CASTING).
14. APPROVED THERMO-PLASTIC CHIMNEY LINER SHALL COMPLETELY COVER THE PRECAST CONCRETE GRADE RINGS AND SHALL BE SEALED TO THE CORBEL LINER BY MEANS OF AN APPROVED POLYISOPRENE LIP SEAL GASKET AND SEALED TO THE RING USING APPROVED BUTYL STRIPS. SEE DETAILS.
15. SOLID THERMO-PLASTIC CAST-IN LINER SYSTEM IS REQUIRED FOR LAST MANHOLE PRIOR TO A LIFT STATION, MANHOLES DEEPER THAN 14 FEET, MANHOLES WITH AN OUTSIDE DROP, AND MANHOLES WITH A FORCE MAIN CONNECTION. SEE APPROPRIATE DETAILS.
16. MANHOLES IN ROADWAYS SHALL BE LOCATED OUTSIDE OF WHEEL PATHS.

STANDARD MANHOLE WITH CAST-IN LINER AND BASE LINER 29S

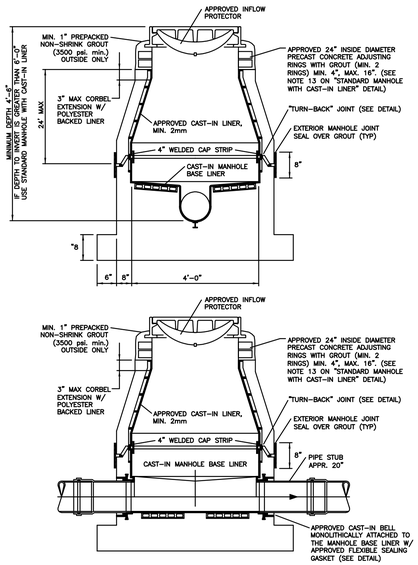

NOTE: ALL CORRESPONDING STANDARD MANHOLE NOTES AND DETAILS SHALL APPLY.

SHALLOW MANHOLE WITH CAST-IN LINER AND BASE LINER 30S

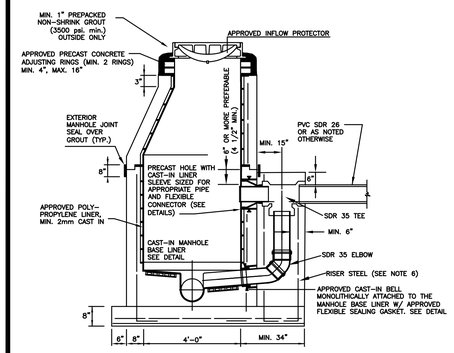

NOTES:

1. ALL DETAILS AND SPECIFICATIONS FOR "STANDARD MANHOLE WITH SOLID POLYPROPYLENE LINER SYSTEM" ARE APPLICABLE EXCEPT FOR REFERENCES TO DROP ASSEMBLY.
2. THE PRECAST BASE SHALL EXTEND FULLY UNDER THE DROP ASSEMBLY.
3. PRECAST DROP ENCASEMENT REQUIRED UP TO TOP EDGE OF 90 DEGREE ELBOW, BRICK AND CONCRETE RUBBLE ARE PERMITTED AS FILLER IN REMAINDER OF DROP ENCASEMENT.
4. DROP CONNECTIONS SHALL BE REQUIRED WHENEVER AN INFLUENT INVERT IS LOCATED 2.0 FEET OR MORE ABOVE THE MAIN INVERT CHANNEL. DROP CONNECTIONS SHOULD NOT BE DESIGNED FOR LESS THAN A 2.4 FOOT DROP.
5. PVC SDR 26 PIPE WITH PVC SDR 35 FITTINGS SHALL BE UTILIZED IN THE DROP ASSEMBLY.
6. DROP ENCASEMENT REINFORCING STEEL TO BE CAST IN PLACE WITH BASE (4 RODS) OR USE 4-1/2" DIA. COIL LOOP INSERTS CAST IN PLACE WITH BASE (TO BE USED WITH 1/2" COIL RODS). COIL LOOP INSERTS TO BE "DAYTON SUPERIOR" B16, 1/2"X 4" OR APPROVED EQUAL.

OUTSIDE DROP MANHOLE WITH CAST-IN LINER AND BASE LINER 31S

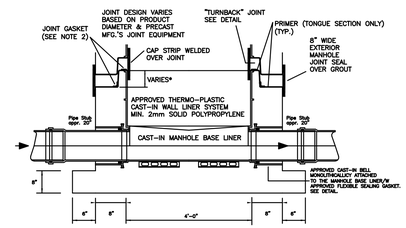

NOTES:

1. LINER WELDING SHALL BE PERFORMED EXCLUSIVELY BY LICENSED, CERTIFIED WELDERS.
2. SHOP DRAWINGS SHALL CALL OUT THE SIZE, TYPE AND POSITIONING OF THE APPROVED JOINT SEALANT.
3. PRIMER TO BE APPLIED BY THE PRECASTER (TONGUE SECTION ONLY).

MANHOLE BASE SECTION 32S

NOTES:

1. APPROVED PLUMBING PLAN MUST BE ON JOB SITE FOR INSPECTION. IF NOT, INSTALLATION WILL BE REJECTED.
2. PLUMBING SHALL CONFORM TO ALL PALM BEACH COUNTY AND OTHER APPLICABLE CODES.
3. ***TEMPORARY CAP IN PLACE (NO SEWAGE). UPSTREAM OF THE VENT PIPE TO BE IN PLACE UNTIL WUD INSPECT AND INSTALL VALVE***
4. EXISTING SEPTIC TANK TO BE ABANDONED IN ACCORDANCE WITH LOCAL HEALTH DEPT. SPECIFICATIONS.
5. AIR INTAKE ASSEMBLY IS REQUIRED.
6. AIR VAC VALVE WILL BE INSTALLED BY UTILITY **AFTER** 4" AIR-INTAKE ASSEMBLY IS IN PLACE.
7. 6. SEWER CONNECTION FEES TO BE PAID PRIOR TO CONNECTION.
8. ***TEMPORARY CAP IN PLACE UNTIL WUD INSPECT AND INSTALL VALVE.***
9. ***CAP IS NOT TO BE REMOVED UNTIL WUD HAS INSTALLED VALVE***

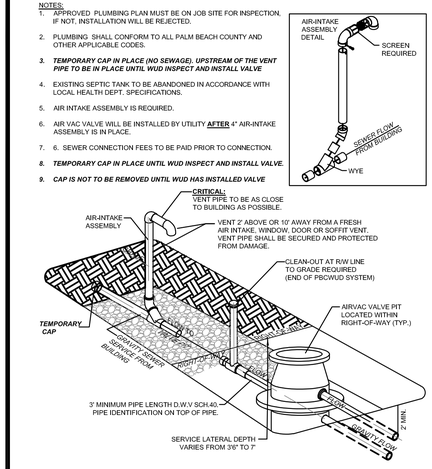

TYPICAL WASTEWATER SERVICE INSTALLATION FOR VACUUM SEWER SYSTEM 82S

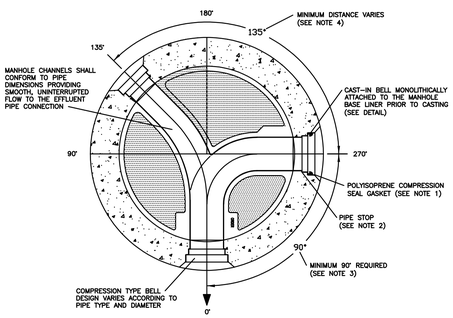

NOTES:

1. ONLY THE POLYISOPRENE GASKET PROVIDED BY THE MANHOLE BASE LINER MANUFACTURER SHALL BE USED IN COMPRESSION TYPE BELLS.
2. CONNECTION PIPES SHALL BE INSERTED COMPLETELY INTO THE BELL CONNECTOR FLUSH WITH THE PIPE STOP PROVIDING A SMOOTH TRANSITION FROM PIPE TO MANHOLE BASE LINER CHANNEL.
3. MINIMUM OF 90 DEGREES BETWEEN INCOMING, LEFT OR RIGHT OF OUTGOING PIPE. DISTANCE BETWEEN CONNECTIONS MAY VARY ACCORDING TO MANHOLE DIAMETER, PIPE SIZE AND TYPE.
4. MINIMUM DISTANCE BETWEEN INFLUENT PIPE CONNECTIONS MAY VARY AND SHALL BE SPECIFIED BY THE LINER MANUFACTURER ACCORDING TO MANHOLE AND/OR PIPE DIAMETER AND TYPE.

FLOW CHANNEL/PIPE CONNECTION TO NEW CAST-IN BASE LINER 33S

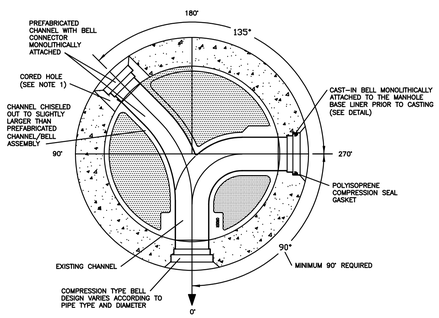

NOTES:

1. CORED OPENING AND CHANNEL DIAMETER PER CHANNEL/BELL MANUFACTURER REQUIREMENTS. SIZES SHALL BE SPECIFIED ON SHOP DRAWING.
2. ONLY AN APPROVED CHANNEL/BELL ASSEMBLY PROVIDED BY THE BASE LINER MANUFACTURER SHALL BE USED.
3. CHANNEL/BELL ASSEMBLY MUST BE COMPLETELY GROUTED IN PLACE USING AN APPROVED CEMENT.
4. UPON "SETTING" OF GROUT, THE NEW CHANNEL/BELL ASSEMBLY MUST BE JOINED TO THE EXISTING MANHOLE BASE LINER BY EITHER THERMO-PLASTIC WELDING OR FRP PATCH AS SPECIFIED BY BASE LINER MANUFACTURER.

FLOW CHANNEL/ PIPE CONNECTION TO EXISTING CAST-IN BASE LINER 34S

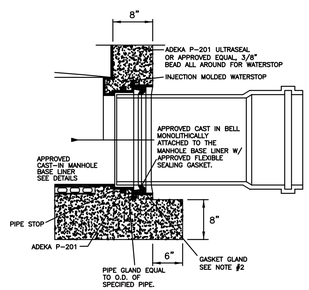

INSTALLATION:

1. CLEAN BELL REMOVING ANY EXCESS CONCRETE SLURRY OR DIRT INSIDE BELL.
2. INSTALL GASKET AS SHOWN.
3. LUBRICATE PIPE SPIGOT AND SLIDE INTO BELL AND GASKET UNTIL REACHING PIPE STOP.
4. CHECK FOR WATERTIGHT CONNECTION. (VACUUM TESTING OR OTHER APPROVED METHOD).

DO NOT LUBRICATE THE GASKET OR THE BELL

NOTES:

1. MANHOLE SHOP DRAWINGS SHALL IDENTIFY THE TYPE OF MANHOLE/PIPE CONNECTION.
2. ONLY THE POLYISOPRENE GASKET SUPPLIED BY THE BELL MANUFACTURER SHALL BE USED IN COMPRESSION TYPE BELLS.
3. BOOT HUB VARIES ACCORDING TO GASKET MANUFACTURER'S SPECIFICATION FOR SPECIFIC PIPE SIZE AND TYPE.
4. MANHOLE SHOP DRAWINGS MUST IDENTIFY THE PIPE SIZE, TYPE, GASKET TYPE AND HOLE SIZE.

PIPE TO MANHOLE CONNECTION DETAIL TYPE "A" (GASKET) 35S

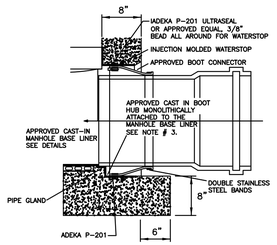

INSTALLATION:

1. CLEAN BOOT HUB REMOVING ANY EXCESS CONCRETE SLURRY OR DIRT INSIDE BELL.
2. INSTALL RUBBER BOOT CONNECTOR (PER MANUFACTURER'S INSTRUCTIONS). WEDGE STYLE EXPANDER BOLTS MUST BE ALIGNED WITH THE "TOP" OF BOOT HUB ACCESS HOTCH.
3. PRE-MITER PIPE END AS REQUIRED TO PREDETERMINED PIPE DEFLECTION ANGLE. MERELY "DE-BURR" PIPE END – DO NOT CHAMFER OR BEVEL PIPE END.
4. LUBRICATE SPIGOT, ORIENT PIPE MITER; SLIDE INTO RUBBER BOOT CONNECTOR; "HOME" PIPE TO BASE LINER CHANNEL END; DEFLECT PIPE AS REQUIRED. INSPECT MANHOLE BASE INTERIOR FOR CHANNEL/PIPE INVERT ALIGNMENT AND SEAL; TIGHTEN RUBBER BOOT CLAMP (PER MANUFACTURER'S INSTRUCTIONS).
1: CHECK FOR WATERTIGHT CONNECTION; (VACUUM TESTING OR OTHER APPROVED METHOD).

DO NOT LUBRICATE THE GASKET OR THE BELL

NOTES:

1. MANHOLE SHOP DRAWINGS SHALL IDENTIFY THE TYPE OF MANHOLE/PIPE CONNECTION.
2. ONLY THE POLYISOPRENE GASKET SUPPLIED BY THE BELL MANUFACTURER SHALL BE USED IN COMPRESSION TYPE BELLS.
3. BOOT HUB VARIES ACCORDING TO GASKET MANUFACTURER'S SPECIFICATION FOR SPECIFIC PIPE SIZE AND TYPE.
4. MANHOLE SHOP DRAWINGS MUST IDENTIFY THE PIPE SIZE, TYPE, GASKET TYPE AND HOLE SIZE.

PIPE TO MANHOLE CONNECTION TYPE "B" (BOOT) 36S

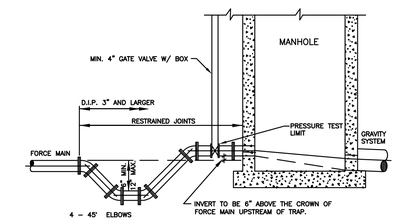

NOTES:

1. FORCE MAIN TO ENTER MANHOLE AS CLOSE AS POSSIBLE TO 180° TO GRAVITY OUTLET.
2. THE INVERT LEVEL OF FORCE MAIN AT POINT OF ENTRY SHALL BE 6" ABOVE OUTFLOW INVERT OF MANHOLE.
3. CORE ENTRY ONLY INTO EXISTING MANHOLES.
4. TRAP TO BE LOCATED PRIOR TO DROP INTO MANHOLE AND OUTSIDE OF PAVED AREAS.
5. USE TWO 45° ELBOWS PAST TRAP IF ELEVATION DROP IS REQUIRED TO ENTER MANHOLE.
6. CAST-IN OR FIELD INSTALLED FLOW CHANNEL IS REQUIRED.
7. MANHOLE WALL TO BE COATED WITH AN APPROVED SOLID THERMOPLASTIC CAST-IN CORROSION BARRIER SYSTEM.
8. TRAP JOINTS TO BE RESTRAINED.

FORCE MAIN ENTERING MANHOLE 43S

WASTEWATER #4 STANDARD DETAILS

CONSULTANT:

DESIGNED BY: WUD
DRAWN BY: M. BUCKNER
CHECKED BY: J. LAMMERT
APPROVED BY: WUD

Palm Beach County
Water Utilities Department
P.O.Box 16097
West Palm Beach, FL 33416-6097

NO.	DATE	REVISION / REMARKS	BY
	JUNE 2019	GENERAL REVISION	J.L.

PROJECT NO. 22-___

OXYGEN DEVELOPMENT

PALM BEACH COUNTY WATER UTILITIES DEPARTMENT
P.O. BOX 16097
WEST PALM BEACH, FL 33416
(561)493-6000

STD DETAILS

SHEET NUMBER 22 OF 23

SEAL

SCOTT M. GINTERT, P.E.
FLORIDA P.E. #84228
Jul 21, 2022

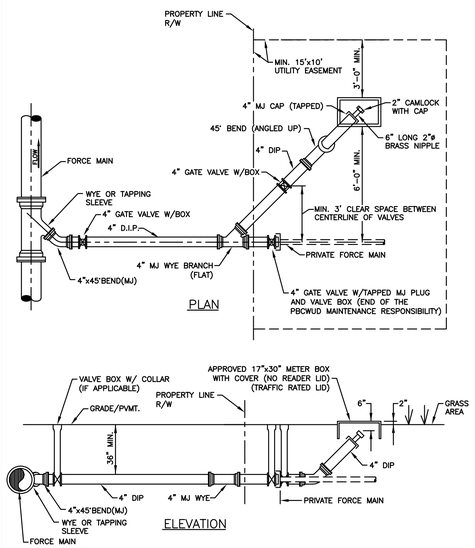

NOTE:

1. THE FLUSHING CONNECTION SHALL BE LOCATED IN GRASS AREA.
2. ALL 4" PIPES SHALL BE RESTRAINED.

CONNECTION OF PRIVATE FORCE MAIN UNDER 4" IN DIAMETER

37S

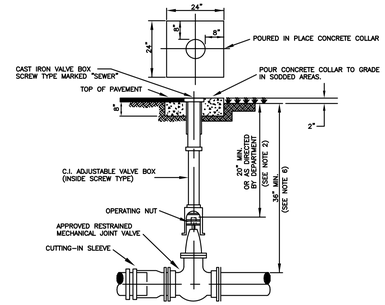

NOTES:

1. CONCRETE COLLAR IS NOT REQUIRED IN PAVED AREAS IF PAVEMENT SURFACE IS FINISHED PRIOR TO CONDITIONAL FINAL INSPECTION.
2. WHEN OPERATING NUT IS DEEPER THAN 36" A ONE PIECE EXTENSION WILL BE REQUIRED TO BRING OPERATING NUT 20"-30" BELOW FINISHED GRADE. EXTENSION BOLTS & NUTS ARE TO BE STAINLESS STEEL. A HIGH STRENGTH STEEL CENTERING PLATE, WELDED TO THE EXTENSION, IS ALSO REQUIRED.
3. VALVE BOXES SHALL HAVE COVERS MARKED "SEWER".
4. EXTENSION VALVE BOX TO BE D.I.P. OR C-900 PVC DR 18 (COLOR: GREEN).
5. A CUT-IN INSTALLATION SHALL REQUIRE MEGALUGS OR EQUAL THROUGHOUT ASSEMBLY.
6. IN ORDER TO MAINTAIN ADEQUATE COVER OVER VALVE NUT, THE FOLLOWING MINIMUM COVERS OVER PIPE ARE REQUIRED:

GATE VALVE SIZE	MIN. COVER OVER PIPE
16"	48"
20"	54"
24"	60"
30"	72"
36"	84"

7. PIPE SHALL BE RESTRAINED ON BOTH SIDES OF THE VALVE AS REQUIRED.
8. VALVES IN ROADWAYS SHALL BE LOCATED OUTSIDE OF WHEEL PATHS WHENEVER POSSIBLE.

TYPICAL FORCE MAIN GATE VALVE SETTING AND CUT-IN DETAIL

38S

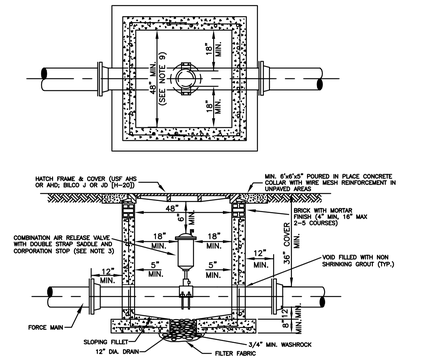

NOTES:

1. 4000 P.S.I. TYPE II CONCRETE
2. VAULT SHALL BE PRECAST WITH STEEL REINFORCING. SHOP DRAWING IS REQUIRED TO BE APPROVED BY THE DEPARTMENT PRIOR TO VAULT CONSTRUCTION AND/OR INSTALLATION.
3. COMBINATION AIR RELEASE VALVE (ARV) SHALL BE TYPE AND SIZE APPROPRIATE FOR SERVICE INTENDED. ALTHOUGH A 2" MINIMUM SIZED ARV IS REQUIRED ON FORCE MAIN INSTALLATIONS.
4. ALL OPENINGS SHALL BE SEALED WITH WATERPROOF NON-SHRINKING GROUT.
5. ALTERNATE VAULT AND COVER DESIGN MAY BE USED PROVIDED ALTERNATE VAULT AND/OR COVER SHOP DRAWINGS WERE SUBMITTED AND APPROVED BY THE DEPARTMENT PRIOR TO THE VAULT AND/OR COVER BEING INSTALLED.
6. COAT INSIDE WITH AN APPROVED CORROSION BARRIER SYSTEM.
7. DUCTILE IRON PIPE IS REQUIRED THROUGH THE VAULT. NO PIPE JOINTS WITHIN THE VAULT.
8. THREADED AREAS OF CORPORATION STOP SHALL BE SPIRAL WRAPPED WITH TWO WRAPS OF TEFLON TAPE.
9. LARGER VAULTS WILL BE REQUIRED FOR PIPES LARGER THAN 12"

PIPE SIZE	MIN. VAULT SIZE
16"-24"	4'W x 5'L
30"-42"	4'W x 6'L

FORCE MAIN AIR RELEASE VALVE AND VAULT OUTSIDE OF R/W, NON-TRAFFIC AREAS

*

39S

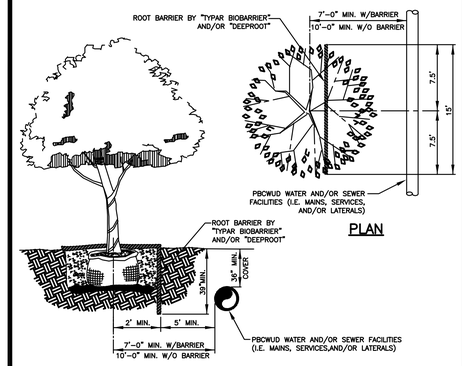

NOTES:

1. TREES SHOWN ON THIS PLAN ARE FOR GRAPHIC REPRESENTATION ONLY. TREE SPACING IS BASED ON DESIGN REQUIREMENTS AND THE TREES SHOWN ON THESE PLANS ATTEMPT TO ACCOMPLISH THAT SPACING WHILE MAINTAINING THE REQUIRED SETBACKS FROM UTILITIES. TREES MAY BE FIELD ADJUSTED TO AVOID CONFLICTS WITH DRIVEWAYS AND UNDERGROUND UTILITIES. IN ANY CASE THE TREES SHALL BE LOCATED IN THE FIELD IN ACCORDANCE WITH THE PLANTING DETAILS SHOWN HEREON.
2. TREES ARE TO BE INSTALLED WITH A TEN FOOT (10') SEPARATION FROM ANY WATER OR SEWER MAIN AND/OR SERVICE, HYDRANTS, AND LIFT STATIONS. IF A TEN FOOT (10') SEPARATION CANNOT BE ACHIEVED, THE TREE CAN BE INSTALLED WITH A ROOT BARRIER SYSTEM. HOWEVER, IN NO CASE SHALL A TREE ENCROACH INTO A PBCUE WITHOUT PRIOR DEPARTMENT APPROVAL.

LANDSCAPE AND ROOT BARRIER DETAIL

*

84S

MIN. LENGTH OF PIPE (FEET) TO BE RESTRAINED

(SOURCES: EBAA IRON RESTRAINT LENGTH CALCULATION PROGRAM FOR PVC PIPE, RELEASE 3.1, AND DIPRA THRUST RESTRAINT FOR DUCTILE IRON PIPE, RELEASE 3.2)

FITTING TYPE		PIPE SIZE											
		4"	6"	8"	10"	12"	16"	20"	24"	30"	36"	42"	48"
90° HORIZ. BEND		14	20	25	30	35	45	54	62	73	84	93	101
45° HORIZ. BEND		6	8	11	13	15	19	22	26	30	35	38	42
22.5° HORIZ. BEND		3	4	5	6	7	9	11	12	15	17	18	20
11.25° HORIZ. BEND		1	2	3	3	4	4	5	6	7	8	9	10
90° VERT. OFFSET	UPPER BEND	29	41	53	64	74	95	115	134	160	185	207	228
	LOWER BEND	7	10	13	16	19	25	30	35	42	49	56	62
45° VERT. OFFSET	UPPER BEND	12	19	24	29	34	39	48	56	66	77	86	94
	LOWER BEND	3	4	6	7	8	10	12	15	18	20	23	26
22.5° VERT. OFFSET	UPPER BEND	6	9	12	14	17	19	23	27	32	37	41	45
	LOWER BEND	1	2	4	4	4	5	6	7	8	10	11	12
11.25° VERT. OFFSET	UPPER BEND	3	4	6	7	8	9	11	13	16	18	20	22
	LOWER BEND	1	1	1	2	2	2	3	3	4	5	5	6
PLUG (DEAD END)		32	45	59	70	83	107	129	151	160	185	207	228
90-LINE VALVE		32	45	45	45	45	55	65	80	85	95	105	115
TEE (BRANCH RESTRAINT)	4"X ø	23	–	–	–	–	–	–	–	–	–	–	–
	6"X ø	21	35	–	–	–	–	–	–	–	–	–	–
	8"X ø	18	34	47	–	–	–	–	–	–	–	–	–
	10"X ø	16	32	46	58	–	–	–	–	–	–	–	–
	12"X ø	13	30	44	57	69	–	–	–	–	–	–	–
	16"X ø	7	26	41	55	67	90	–	–	–	–	–	–
	20"X ø	1	21	38	52	65	88	109	–	–	–	–	–
	24"X ø	1	16	34	49	62	86	108	129	–	–	–	–
	30"X ø	1	8	28	44	58	83	106	127	154	–	–	–
	36"X ø	1	1	22	39	54	80	103	124	153	179	–	–
	42"X ø	1	1	15	33	49	77	100	122	151	177	201	–
	48"X ø	1	1	7	27	44	73	97	120	149	176	200	222
REDUCER (LARGER PIPE RESTRAINT)	6"X ø	23	–	–	–	–	–	–	–	–	–	–	–
	8"X ø	38	25	–	–	–	–	–	–	–	–	–	–
	10"X ø	57	43	24	–	–	–	–	–	–	–	–	–
	12"X ø	72	60	44	41	–	–	–	–	–	–	–	–
	16"X ø	99	90	78	75	45	–	–	–	–	–	–	–
	20"X ø	123	116	107	105	81	45	–	–	–	–	–	–
	24"X ø	146	140	132	131	111	82	45	–	–	–	–	–
	30"X ø	157	153	148	141	133	113	87	56	–	–	–	–
	36"X ø	182	179	175	169	163	147	126	101	56	–	–	–
	42"X ø	205	202	199	194	189	175	150	136	100	54	–	–
	48"X ø	226	224	221	217	213	201	187	169	138	98	53	–

NOTES:

1. THE DATA IN THE ABOVE TABLE ARE BASED UPON THE FOLLOWING INSTALLATION CONDITIONS:
   SOIL TYPE-SAND TEST PRESSURE-150 PSI DEPTH OF BURY-3'
   TRENCH TYPE-3 SAFETY FACTOR- 1.5 VERTICAL OFFSET-3'
   MINIMUM PIPE LENGTH ALONG TEE RUN-5'
2. THE RESTRAINED PIPE LENGTHS APPLY TO DUCTILE IRON AND PVC PIPE.
3. ALL JOINTS BETWEEN UPPER AND LOWER BENDS SHALL BE RESTRAINED.
4. RESTRAINED PIPE LENGTHS APPLY TO PIPE ON BOTH SIDES OF VALVES AND FITTINGS.
5. MULTIPLY PIPE LENGTH BY 1.4 FOR POLYETHYLENE ENCASED PIPE.
6. RESTRAINED PIPE LENGTHS EQUAL TO AN "INLINE VALVE" CONDITION ARE REQUIRED AT EACH END OF A TRANSITION FROM HDPE PIPE TO OTHER PIPE MATERIALS.
7. DESIGN ENGINEER IS RESPONSIBLE FOR PROPER RESTRAINT PIPE LENGTH SIZING FOR THE PROJECT.

MECHANICAL THRUST RESTRAINT MINIMUM PIPE LENGTHS (FORCE MAINS)

41S

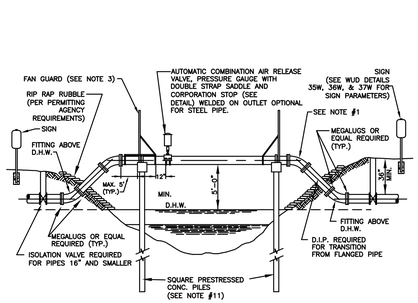

NOTES:

1. ALL EXPOSED PIPE SHALL BE DUCTILE IRON OR PREFABRICATED STEEL WITH FLANGED FITTINGS AND PROFILED GASKETS. RETAINER GLANDS AND UNIFLANGE TYPE FITTINGS ARE NOT TO BE SUBSTITUTED FOR FLANGED FITTINGS. PREFABRICATED STEEL PIPE MAY INCORPORATE WELDED ON LONG RADIUS UPPER BENDS. PREFABRICATED FLANGED PIPE SHALL BE FACTORY TESTED.
2. SPAN LENGTHS AS REQUIRED BY PERMITTING AGENCY
3. FAN GUARDS ARE REQUIRED. SEE FAN GUARD/PILE CAP DESIGN DETAILS, FOR ADDITIONAL REQUIREMENTS. ACCESS PLATFORM AND GATE REQUIRED ON ARV SIDE ONLY.

4A. ALL EXPOSED PIPING SHALL BE PAINTED AS SPECIFIED IN THE APPROVED MATERIAL LIST.

4B. ALL HARDWARE SHALL BE PAINTED WITH COAL-TAR EPOXY.

5. PIPE SHALL BE CRADLED ON ¼" THICK NEOPRENE. (DUROMETER GRADE 50) CURRENT FDOT STANDARDS APPLY. NEOPRENE IS REQUIRED AT ALL STRAPS INSTALLED OVER STEEL PIPE. NEOPRENE SHALL EXTEND 1" BEYOND THE EDGES OF CRADLE AND STRAPS.
6. TIE-DOWN STRAPS MUST PROPERLY FIT AND SECURE PIPE IN CRADLE.
7. PIPE CRADLE IN CAP SHALL CONTACT ½ CIRCUMFERENCE OF PIPE. (SEE FAN GUARD DETAIL)
8. SHOW EXISTING CANAL CROSS SECTION, ULTIMATE CANAL SECTION, AND RELEVANT ELEVATIONS AND DISTANCES ON A TO SCALE DETAIL DRAWING.
9. PILE LIFT CABLE SHALL BE REMOVED BELOW SURFACE; HOLE SHALL BE FILLED WITH EPOXY CEMENT.
10. THREADED AREAS OF BRASS FITTINGS SHALL BE SPIRAL WRAPPED WITH TWO WRAPS OF TEFLON TAPE.
11. THE PILES AND CAP DESIGN SHALL BE SHOWN ON TO SCALE SIGNED AND SEALED DETAIL DRAWINGS. MIN. 12"x12" TYPE 1A FLORIDA DOT INDEX PILES ARE REQUIRED. PILE PENETRATION BELOW CANAL BOTTOM SHALL BE 15' MINIMUM. MINIMUM LOAD CAPACITY OF 20 TONS PER PILE IS REQUIRED (FDOT STANDARDS APPLY). SIGNED AND SEALED SHOP DRAWINGS ARE REQUIRED.
12. PREFABRICATED STEEL PIPE SHAL HAVE WELDED ON BEARING PADS EXTENDING MIN. 1" BEYOND PIPE CRADLE. THE PADS SHALL BE INSTALLED BY STEEL PIPE MANUFACTURER PRIOR TO PAINTING.
13. FORCE MAIN CROSSINGS OVER BODIES OF WATER MAY BE SUBJECT TO A D.E.P. "NOTICED GENERAL ENVIRONMENTAL RESOURCE PERMIT" (NGP)

TYPICAL FORCE MAIN AERIAL CANAL CROSSING – SINGLE PIPE (SINGLE PILES)

*

45S

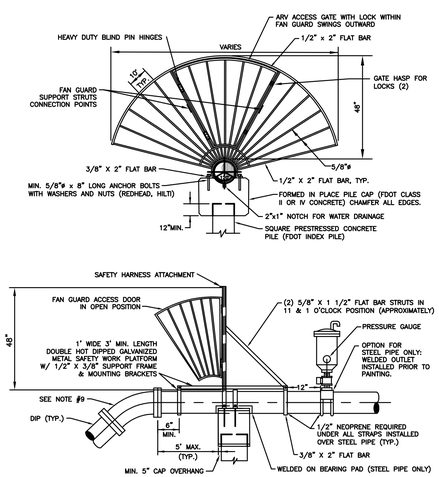

NOTES:

1. FAN GUARDS SHALL BE PLACED AT EACH END OF CANAL CROSSING.
2. HARDWARE SHALL BE PAINTED WITH COAL TAR EPOXY.
3. FANGUARD WITH HARDWARE SHALL BE FABRICATED FROM DOUBLE HOT DIPPED GALVANIZED STEEL.
4. SHOP DRAWINGS FOR FANGUARDS, CAPS, AND PILES MUST BE SUBMITTED TO PBCWUD FOR REVIEW AND APPROVAL PRIOR TO PRE-CONSTRUCTION MEETING.
5. REINFORCING STEEL SHALL CONFORM TO ASTM A-615, GRADE 60. MIN. 2" CONCRETE COVER OVER ALL STEEL.
6. SEE "TYPICAL CANAL CROSSING DETAIL" FOR ADDITIONAL REQUIREMENTS.
7. NO WELDING OF REBAR TO REBAR OR REBAR TO PILE STRANDS SHALL BE ALLOWED.
8. DESIGN DRAWINGS ARE REQUIRED.
9. LONG RADIUS WELDED ON UPPER BENDS ARE ACCEPTABLE FOR STEEL PIPE.
10. IF A PILE/CAP STEEL CONNECTION IS REQUIRED BY DESIGNING ENGINEER, MIN. (4) #8 REINFORCEMENT BARS SHALL BE DRILLED AND DOWELED (EPOXIED) MIN. 16" DEEP INTO THE PILE AND TIED WITH THE CAP STEEL.
11. ACCESS PLATFORM AND GATE REQUIRED ON ARV SIDE ONLY.

FAN GUARD/ PILE CAP DESIGN – SINGLE PIPE (SINGLE PILES)

46S

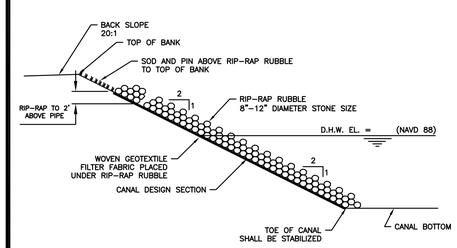

NOTES:

1. RIP-RAP RUBBLE AND ITS INSTALLATION MUST MEET CANAL OWNERSHIP SPECIFICATIONS AND PERMITTING REQUIREMENTS.
2. DUMP RUBBLE IN PLACE FORMING A COMPACT LAYER CONFORMING TO THE CANAL DESIGN SECTION SLOPE. ENSURE THAT RUBBLE DOES NOT SEGREGATE SO THAT SMALLER PIECES EVENLY FILL THE VOIDS BETWEEN LAGER PIECES.
3. AN ALTERNATIVE DESIGN WILL BE CONSIDERED AND MUST RECEIVE PRIOR APPROVAL FROM THE CANAL PROPERTY OWNER.

RIP-RAP RUBBLE DETAIL

*

83S

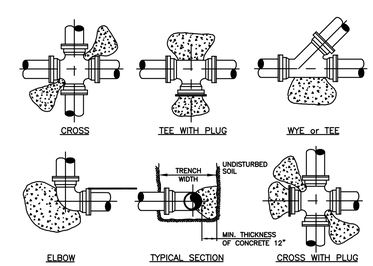

PIPE	THRUST BLOCK AREA REQ'D	REMARKS	NOTE: FOR OTHER FITTINGS USE THE FOLLOWING FACTORS.
4"	2.0 SQ. FT.	VALUES ARE FOR 90° BEND, BASED ON 2000 P.S.F. SAFE BEARING LOAD AND PIPE PRESSURE OF 150 P.S.I. FOR OTHER SOILS & PRESSURES THE AREA REQUIRED IS IN DIRECT PROPORTION	TEE 100% 45° BEND 71% 22 1/2° BEND 39% 11 1/4° BEND 20% DEAD END 100%
6"	4.0 SQ. FT.		
8"	6.6 SQ. FT.		
10"	10.0 SQ. FT.		
12"	14.0 SQ. FT.		
14"	18.6 SQ. FT.		

NOTES:

1. CONCRETE THRUST BLOCKS OR THRUST COLLARS MAY BE UTILIZED ONLY IF NECESSARY FOR CONNECTIONS TO AN EXISTING PIPING SYSTEM, OTHERWISE MECHANICAL RESTRAINTS SHALL BE USED. KEEP "T" BOLTS CLEAR OF CONCRETE, WRAPPED IN VISQUEEN FOR FUTURE ACCESS, WITH A MINIMUM OF 1" THICKNESS BETWEEN THE FITTING AND SOIL.
2. BEFORE POURING CONCRETE, PLUGS SHALL BE WRAPPED WITH VISQUEEN AND A BOARD PLACED IN FRONT.
3. CONCRETE SHALL BE 2500 P.S.I. MINIMUM.
4. THE ENGINEER OF RECORD SHALL SUBMIT A THRUST BLOCK SIZE CALCULATION FOR TEE CONNECTIONS INTO UNRESTRAINED EXISTING MAINS LARGER THAN 14".
5. THE ENGINEER OF RECORD SHALL SUBMIT A PIPE RESTRAINT DESIGN FOR INLINE EXTENSIONS OF A EXISTING UNRESTRAINED MAIN IF MECHANICAL JOINT RESTRAINT CAN NOT BE INSTALLED ON THE EXISTING MAIN.

TYPICAL THRUST BLOCKS FOR PRESSURE PIPING

42S

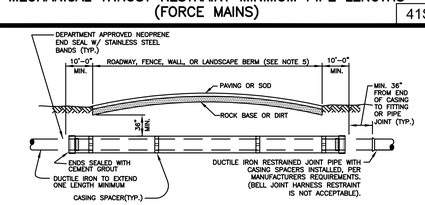

CARRIER PIPE SIZE	STEEL CASING INSIDE DIAMETER (MIN)	MINIMUM WALL THICKNESS (SEE NOTE 2)
4"	12"	.188
6"	14"	.250
8"	20"	.250
10"	20"	.250
12"	24"	.250
14"	24"	.250
16"	30"	.312
18"	30"	.312
20"	36"	.372
24"	42"	.500
30"	48"	.500
36"	54"	.625
42"	60"	.625
48"	72"	.625

NOTES:

1. A PROFILE DRAWING TO SCALE FOR EACH JACK AND BORE, DIRECTIONAL DRILL, OR DIRECT BURIED INSTALLATION IS REQUIRED TO BE APPROVED BY THE DEPARTMENT PRIOR TO INSTALLATION. IF A SPLIT CASING IS REQUIRED THEN SHOP DRAWINGS ARE REQUIRED TO BE SUBMITTED AND APPROVED BY THE DEPARTMENT PRIOR TO CONSTRUCTION AND/OR INSTALLATION.
2. THICKER WALL CASINGS AND LARGER COVER OVER CASING MAY BE REQUIRED BY THE RIGHT-OF-WAY OWNER.
3. STEEL CASING SHALL BE COATED OUTSIDE WITH COAL TAR EPOXY. (MIN. 16 MILS DFT) AND BE PAINTED WITH A 4" MINIMUM WIDE CONTINUOUS STRIPE, COLOR CODED TO MATCH THE PIPE INSIDE, ALONG THE TOP AXIS OF THE CASING.
4. PIPE IN CASING SHALL BE PULLED TO FULLY ENGAGE RESTRAINT.
5. STEEL CASING IS REQUIRED FOR ALL WASTEWATER MAIN INSTALLATIONS UTILIZING JACK AND BORE CONSTRUCTION AND WHEN MAINS ARE INSTALLED UNDER FENCES, WALLS, OR LANDSCAPE BERMS. WHEN THE CASING IS INSTALLED UNDER FENCES, WALLS, OR LANDSCAPE BERMS IT SHALL BE CENTERED ON THE PREVIOUS BARRIER AND IS REQUIRED TO EXTEND 10' MINIMUM PAST BARRIER ON EACH SIDE UNLESS OTHERWISE PREVIOUSLY APPROVED BY THE DEPARTMENT.

WASTEWATER MAIN CASING INSTALLATION

*

44S

WASTEWATER #5 STANDARD DETAILS

CONSULTANT:

DESIGNED BY: WUD
DRAWN BY: M. BUCKNER
CHECKED BY: J. LAMMERT
APPROVED BY: WUD

Palm Beach County
Water Utilities Department
P.O.Box 16097
West Palm Beach, FL 33416-6097

PROJECT NO. 22-___

OXYGEN DEVELOPMENT

PALM BEACH COUNTY FLORIDA

PALM BEACH COUNTY WATER UTILITIES DEPARTMENT P.O. BOX 16097 WEST PALM BEACH, FL 33416 (561)493-6000

NO.	DATE	REVISION / REMARKS	BY
*	JUNE 2019	GENERAL REVISION	J.L.

STD DETAILS

SHEET NUMBER 23 OF 23

SEAL

SCOTT M. GINTERT, P.E. FLORIDA P.E. #84228 Jul 21, 2022

Drawing: W:\Projects\2022\22-006_Oxygen Development\CAD\WUD 2019 STD DTLS - WASTEWATER (5 SHTS).dwg\WUD WW-5 - Last Modified: Thu, Jul 21, 2022 - 11:14am

1 3/64" = 1'-0" COLORED NORTH ELEVATION

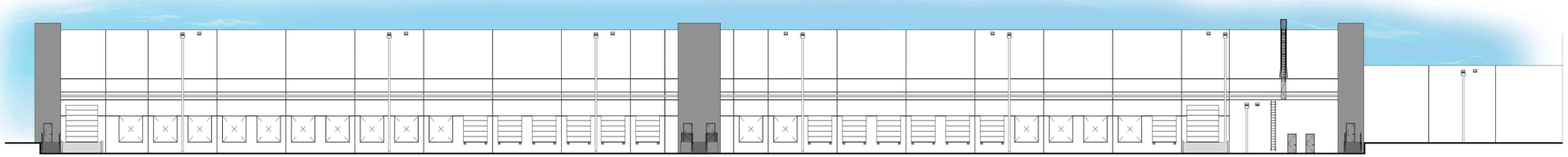

2 3/64" = 1'-0" COLORED SOUTH ELEVATION

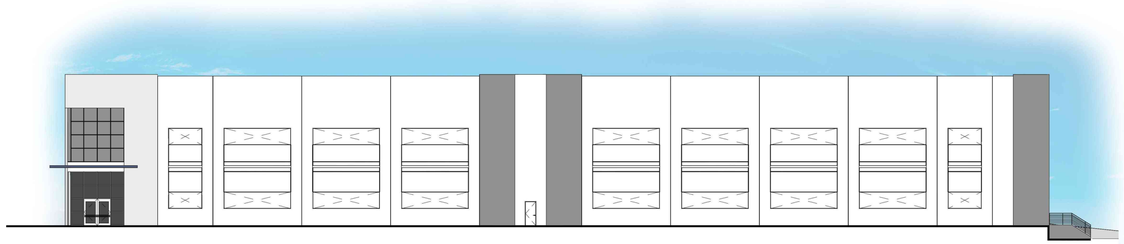

3 3/64" = 1'-0" COLORED WEST ELEVATION

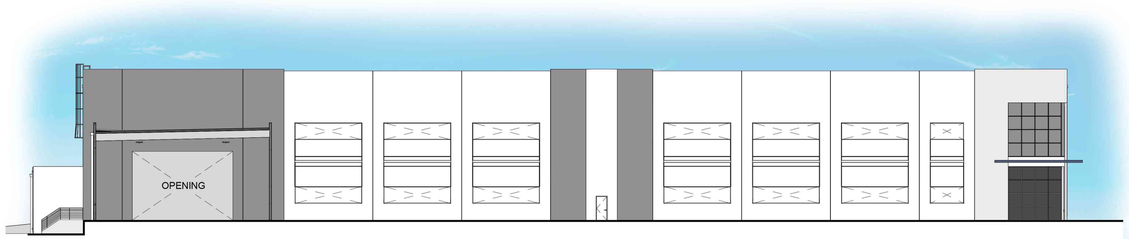

4 3/64" = 1'-0" COLORED EAST ELEVATION

PAINT COLOR LEGEND:

G1	LIGHT GRAY: SW 7071 "GRAY SCREEN"
G2	DARK GRAY: SW 7067 "CITYSCAPE"
W	WHITE: SW 7005 "PURE WHITE"
B	BLUE: SW 6538 "DIGNIFIED"

NOTES:

- ALL WINDOWS TO BE CLEAR ANODIZED ALUMINUM FRAMES WITH TINTED IMPACT GLASS, U.N.O.
- PROVIDE MEDIUM TEXTURED ACRYLIC COATING WITH INTEGRAL BASE BUILDING COLOR (TEXCOTE XL-70 OR APPROVED EQUAL) ON ALL EXTERIOR WALLS EXCEPT DOCK DOOR WALLS AND UTILITY ROOM WALLS.
- ACCENT COLORS AND DOCK AREA WALLS TO BE PRIMED AND HAVE TWO (2) COATS OF COMMERCIAL QUALITY GRADE LATEX PAINT. WHERE DARK COLORS ARE USED, PROVIDE SATIN FINISH LATEX.
- ALL COLORS TO BE "SHERWIN WILLIAMS" EXTERIOR ACRYLIC LATEX OR APPROVED EQUAL.
- MISCELLANEOUS METALS INCLUDING EXTERIOR EXPOSED METALS (I.E HANDRAILS, LADDERS, BOLLARDS) TO HAVE ONE (1) COAT OF PRIMER AND TWO (2) COATS OF COMMERCIAL QUALITY GRADE ENAMEL PAINT.
- CONTRACTOR TO PROVIDE SAMPLES OF COLORS ON ACTUAL BUILDING FOR OWNER'S FINAL REVIEW.
- RETURN ALL REVEALS @ PANEL OVERLAPS, TYP.
- ALL EXTERIOR 'TILT UP' WALLS TO RECEIVE TEX-COTE XL-70W. FINISHES AS FOLLOWS:
  - ENTRY PANEL: FINE
  - HORIZONTAL BAND: SMOOTH
  - MAIN BLDG PLANELS: MEDIUM

OXYGEN INDUSTRIAL

OXYGEN DEVELOPMENT

PALM SPRINGS, FLORIDA

No.	DESCRIPTION	DATE

ALL DRAWINGS, SPECIFICATIONS AND RELATED DOCUMENTS ARE THE COPYRIGHT PROPERTY OF THE ARCHITECT AND MUST BE RETURNED UPON REQUEST. REPRODUCTION OF DRAWINGS, SPECIFICATIONS AND RELATED DOCUMENTS IN PART OR WHOLE IS FORBIDDEN WITHOUT THE ARCHITECT'S WRITTEN PERMISSION.

CONTRACTOR MUST CHECK AND VERIFY ALL DIMENSIONS AND FIELD CONDITIONS AND NOTIFY ARCHITECT/ENGINEER IMMEDIATELY OF ANY DISCREPANCIES.

HNM ARCHITECTURE
3705 North Federal Highway • Delray Beach, Florida 33483 • T. 561.733.2225
info@hnm-architecture.com • AA26000726 • www.hnm-architecture.com

HNM PROJECT NUMBER: 22.003

ISSUED DATE: 07/25/2022

SCALE: As indicated

TITLE: COLOR ELEVATIONS

DRAWING NUMBER: A-4.1

A Higher Standard of Excellence
engenuity group inc.
ENGINEERS SURVEYORS GIS MAPPERS

C. ANDRE BAYMAN, P.S.M.
KEITH B. JACKSON, P.E.
LISA A. TROPEPE, P.E.
ADAM SWANEY, P.E., LEED AP
JENNIFER MALIN, P.S.M.

September 16, 2022

To: Iramis Cabrera, VPS Planning, Zoning & Building Director

From: Tara Bamber, PE

Re: Oxygen Warehouse Expansion
Site Plan Approval Letter
Engenuity Group Project No. 6001.130

We have received the following through WeTransfer on 9-12-22:

1. Civil Plan, 23 sheets, revised 9-9-22, by Last Devenport, Inc.
2. Site Plan, 3 sheets (SP-1 to SP-3), revised 9-9-22, by Urban Design Studio.
3. Landscape Plan, 6 sheets (LA-1 to LA-6), revised 9-9-22, by Urban Design Studio.
4. Boundary & topographic Survey, 2 sheets, dated 3-2-22, by Engenuity Group, Inc.
5. Surface Water Management Calculations, 57 sheets, revised 9-9-22, by Last Devenport, Inc.
6. Response to Comments Letter, 6 sheets, dated 9-12-22, by Urban Design Studio.
7. Project Narrative, 14 sheets, dated 9-12-22, by Urban Design Studio.
8. Unified Development Application, 19 sheets, dated 9-12-22, by VPS.

We recommend Site Plan approval with the following conditions:

1. Additional comments shall be asked regarding the Surface Water Management Calculations, including but not limited to:
   a. Revise the exfiltration trench length for the overall site and North Parcel in the Post-Development Compensating Storage Table.
2. Demonstrate the perimeter berm is provided within the property, including the North Parcel.
3. Provide permits from applicable agencies including, but not limited to, LWDD, SFWMD, PBCWUD, PBC Fire Rescue, etc.
4. Additional comments shall be asked at time of Civil Plan review.

If you should have any questions, please give me a call at 561-655-1151.

Cc: Lisa Tropepe, PE
Rogelio Perez Gonzalez

Department of Engineering and Public Works
P.O. Box 21229
West Palm Beach, FL 33416-1229
(561) 684-4000
FAX: (561) 684-4050
www.pbcgov.com

Palm Beach County Board of County Commissioners

Robert S. Weinroth, Mayor
Gregg K. Weiss, Vice Mayor
Maria G. Marino
Dave Kerner
Maria Sachs
Melissa McKinlay
Mack Bernard

County Administrator

Verdenia C. Baker

"An Equal Opportunity Affirmative Action Employer"

printed on sustainable and recycled paper

April 12, 2022

Bryan G. Kelley, P.E.
Simmons & White, Inc.
2581 Metrocentre Blvd, Suite 3
West Palm Beach, FL 33407

RE: Oxygen Development
Project #: 220316
Traffic Performance Standards (TPS) Review

Dear Mr. Kelley:

The Palm Beach County Traffic Division has reviewed the above referenced project Traffic Impact Statement, revised April 5, 2022, pursuant to the Traffic Performance Standards in Article 12 of the Palm Beach County (PBC) Unified Land Development Code (ULDC). The project is summarized as follows:

Municipality:	Palm Springs
Location:	West side of Congress Ave, about 800 north of Forest Hill Blvd
PCN:	70-43-44-07-37-006-0000 (additional PCNs in file)
Access:	As existing (one right-in/right-out and one right-in-left-in/right-out access driveway connections onto Congress Ave) (As used in the study and is NOT necessarily an approval by the County through this TPS letter)
Existing Uses:	General Office = 44,485 SF Warehouse = 166,878 SF
Proposed Uses:	Additional warehouse for a total of 327,478 SF
Project Daily Trips:	949
Project Peak Hour Trips:	111 (91/20) AM; 102 (22/80) PM
New Daily Trips:	252
New Peak Hour Trips:	25 (19/6) AM; 27 (7/20) PM
Build-out:	December 31, 2026

Based on our review, the Traffic Division has determined the proposed development does not have significant peak hour traffic impact (as defined in PBC TPS) on the roadway network and, therefore, **meets** the TPS of Palm Beach County.

Please note an FDOT conceptual driveway pre-approval letter must be provided for the access connections onto Congress Ave for the proposed land use.

Please note the receipt of a TPS approval letter does not constitute the review and issuance of a Palm Beach County Right-of-Way (R/W) Construction Permit nor does it eliminate any requirements that may be deemed as site related. For work within Palm Beach County R/W, a detailed review of the project will be provided upon submittal for a R/W permit application. The project is required to comply with all Palm Beach County standards and may include R/W dedication.

No building permits are to be issued by the Village after the build-out date specified above. The County traffic concurrency approval is subject to the Project Aggregation Rules set forth in the Traffic Performance Standards Ordinance.

The approval letter shall be valid no longer than one year from date of issuance, unless an application for a Site Specific Development Order has been approved, an application for a Site Specific Development Order has been submitted, or the approval letter has been superseded by another approval letter for the same property.

If you have any questions regarding this determination, please contact me at 561-684-4030 or email HAkif@pbcgov.org.

Sincerely,

Hanane Akif, P.E.
Professional Engineer
Traffic Division

QB:HA:qg
ec:
Iramis Cabrera, Interim PZ&B Director, Village of Palm Springs
Quazi Bari, P.E., PTOE, Manager – Growth Management, Traffic Division

File: General - TPS - Mun - Traffic Study Review
F:\TRAFFIC\HA\MUNICIPALITIES\APPROVALS\2022\220316 - OXYGEN DEVELOPMENT.DOCX;

LAKE WORTH DRAINAGE DISTRICT

13081 S. MILITARY TRAIL
DELRAY BEACH, FLORIDA 33484-1105

Board of Supervisors
James M. Alderman
Stephen Bedner
Carrie P. Hill
Jeffrey P. Phipps, Sr.
John I. Whitworth III
Executive Director
Tommy B. Strowd, P.E.
District Counsel
Mark A. Perry, P.A.

October 28, 2022

Iramis Cabrera
Planning, Zoning & Building
Village of Palm Springs
226 Cypress Lane
Palm Springs, Florida 33461-1699

Subject: Oxygen Development Expansion
VSP Petition No. 22-006
SW Quad of L-7 Canal & Congress Ave
PCN: 70-43-44-07-37-007-0000 + others
LWDD Record No.: RI-22-0069

Dear Ms. Cabrera:

We have received your e-mail notification dated October 28, 2022, with the attached print of the subject site & engineering plans for review and compliance with Lake Worth Drainage District (LWDD) Operating Policies and we respectfully submit the following comments.

This application has been reviewed by Dave Bends; I can be reached at 561-819-5559 or dbends@lwdd.net. COMMENT

The following Lake Worth Drainage District (LWDD) comments are based on the site & engineering plans dated October 26, 2022. COMMENT

It appears the proposed parking lot on the north side of the L-7 Canal has been removed from the latest submitted plans, therefore, prior comments regarding the requirement for the conveyance of an additional right-of-way easement are no longer applicable at this time.

LWDD has no objection to the certification of the subject development project as all previous issues have been resolved.

Thank you for the opportunity to review and comment.

Sincerely,

David A. Bends

David A. Bends, P.S.M.
Project Surveyor

Florida Department of Transportation

RON DESANTIS
GOVERNOR

605 Suwannee Street
Tallahassee, FL 32399-0450

JARED W. PERDUE, P.E.
SECRETARY

June 16, 2022

THIS PRE-APPLICATION LETTER IS VALID UNTIL – June 16, 2023
THIS LETTER IS NOT A PERMIT APPROVAL

Bryan Kelley
Simmons and White
2581 Metrocentre Boulevard
West Palm Beach

Dear Bryan Kelley:
RE: Pre-application Review for **Category C Driveway,** Pre-application Meeting Date: **June 16, 2022**
Palm Beach County - Palm Springs; SR 807; Sec. # 93006000; MP: 4.5; Access Class - 5;
Posted Speed - 40; SIS - Influence Area; Ref. Project: FM 409690.1-Yanique Kelly-MISCELLANEOUS CONSTRUCTION

Request:
Driveway 1: Right-in/right-out driveway on the west side of SR 807 adjacent to the north property line.
Driveway 2: Use existing right-in/left-in/right-out access on the west side of SR 807 approximately 430 feet south of Driveway 1.

SITE SPECIFIC INFORMATION
Project Name & Address: **Oxygen Development – 1525 S. Congress Avenue, Palm Springs**
Property Owner: **Simmons and White on behalf of owner**; Parcel Size: **14.36 Acres**
Development Size: **Additional 158,600 SF Warehouse expansion to existing building. Existing: 166,878 SF Warehouse, 44,485 SF Office. Proposed: 327,478 SF Warehouse, 44,485 SF Office.**

WE APPROVE YOUR REQUEST

This decision is based on your presentation of the facts, site plan and survey - please see the conditions and comments below. You may choose to review this concept further with the District Access Management Review Committee (AMRC).

Conditions:
- **A minimum driveway length of 30 feet, as measured from the ultimate right-of-way line to the first conflict point shall be provided.**
- **If a gate is proposed, a minimum driveway length of 100 feet and a turnaround area before the gate are required.**

Comments:
- All driveways not approved in this letter must be fully removed and the area restored.
- A Drainage Permit is required for any stormwater impacts within FDOT right-of-way (i.e. increased runoff or reduction of existing storage).
- The applicant shall donate property to the Department if right-of-way dedication is required to implement the improvements.
- Dimensions between driveways are measured from the near edge of pavement to near edge of pavement and for median openings are measured from centerline to centerline unless otherwise indicated.

The purpose of this Pre-Application letter is to document the conceptual review of the approximate location of driveway(s) to the State Highway System and to note required improvements, if any. This letter shall be submitted with any further reviews and for permitting. The Department's personnel shall review permit plans for compliance with this letter as well as current Department standards and/or specifications. Final design must consider the existing roadway profile and any impacts to the existing drainage system. **Note, this letter does not guarantee permit approval**. The permit may be denied based on the review of the submitted engineering plans. Be aware that any approved median openings may be modified (or closed) in the future, at the sole discretion of the Department. For right-of-way dedication requirements go to: https://osp.fdot.gov; click on Statewide Permit News; Scroll down to District 4; Scroll down to Additional Information and Examples and choose Right-of-way Donations/Dedications.
Please contact the Access Management Manager - Tel. # 954-777-4363 or e-mail: D4AccessManagement@dot.state.fl.us with any questions regarding the Pre-Approval Letter and Permits Office - Tel. # 954-777-4383 with any questions regarding permits.

Sincerely,

Dalila Fernandez, P.E.
District Access Management Manager

cc: Jonathan Overton, P.E., Jerry Dean
File: S:\Transportation Operations\Traffic Operations\Access Management\1. Pre-Apps and Variance\2022-06-16\5. 93006000 MP 4.5 SR 807_Oxygen Development\93006 MP 4.5 SR 807_Oxygen Development.docx

urban design studio
Urban Planning & Design
Landscape Architecture
Communication Graphics

610 Clematis Street, Suite CU02
West Palm Beach, FL 33401
561.366.1100 FAX 561.366.1111
www.udsflorida.com
#LC0000035

Copyright:
All ideas, designs, arrangements, and plans represented by this drawing are owned by and the property of the designer, and were created for the exclusive use of the specified project. These ideas, designs, arrangements or plans shall not be used by, or disclosed to any person, firm, or corporation without the written permission of the designer.

Oxygen Development

Palm Springs, Florida
Site Plan - EXHIBIT

NORTH

0 40' 80' 160'

Scale: 1" = 80'-0"

Date:	09.2020
Project No.:	07-066.002
Designed By:	JEB
Drawn By:	JEB
Checked By:	WJT

Revision Dates:

05-12-2022 SUBMITTAL
07-29-2022 SUBMITTAL
09-09-2022 RESUBMITTAL
09-20-2022 RESUBMITTAL
10-27-2022 RESUBMITTAL

EXHIBIT

OXYGEN INDUSTRIAL

OXYGEN INDUSTRIAL

VILLAGE OF PALM SPRINGS

Oxygen Development

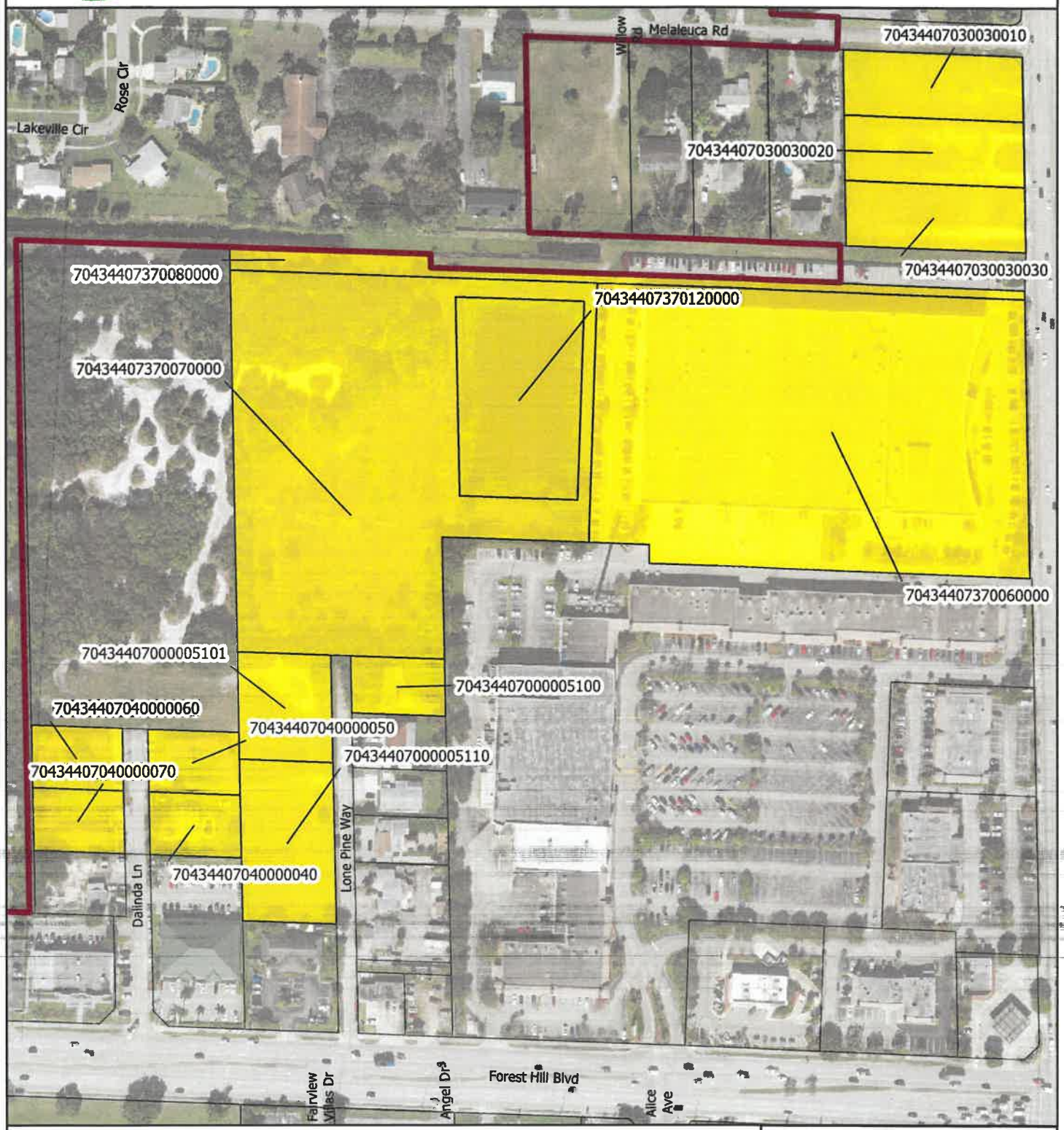

Legend

- Proposed Parcels
- Parcels
- Village Boundary

Date: 10/26/2022

When Printed on 8 1/2" x 11"

1 inch equals 250 feet

0 250 Feet

Florida Technical Consultants

VILLAGE OF PALM SPRINGS

Oxygen Development

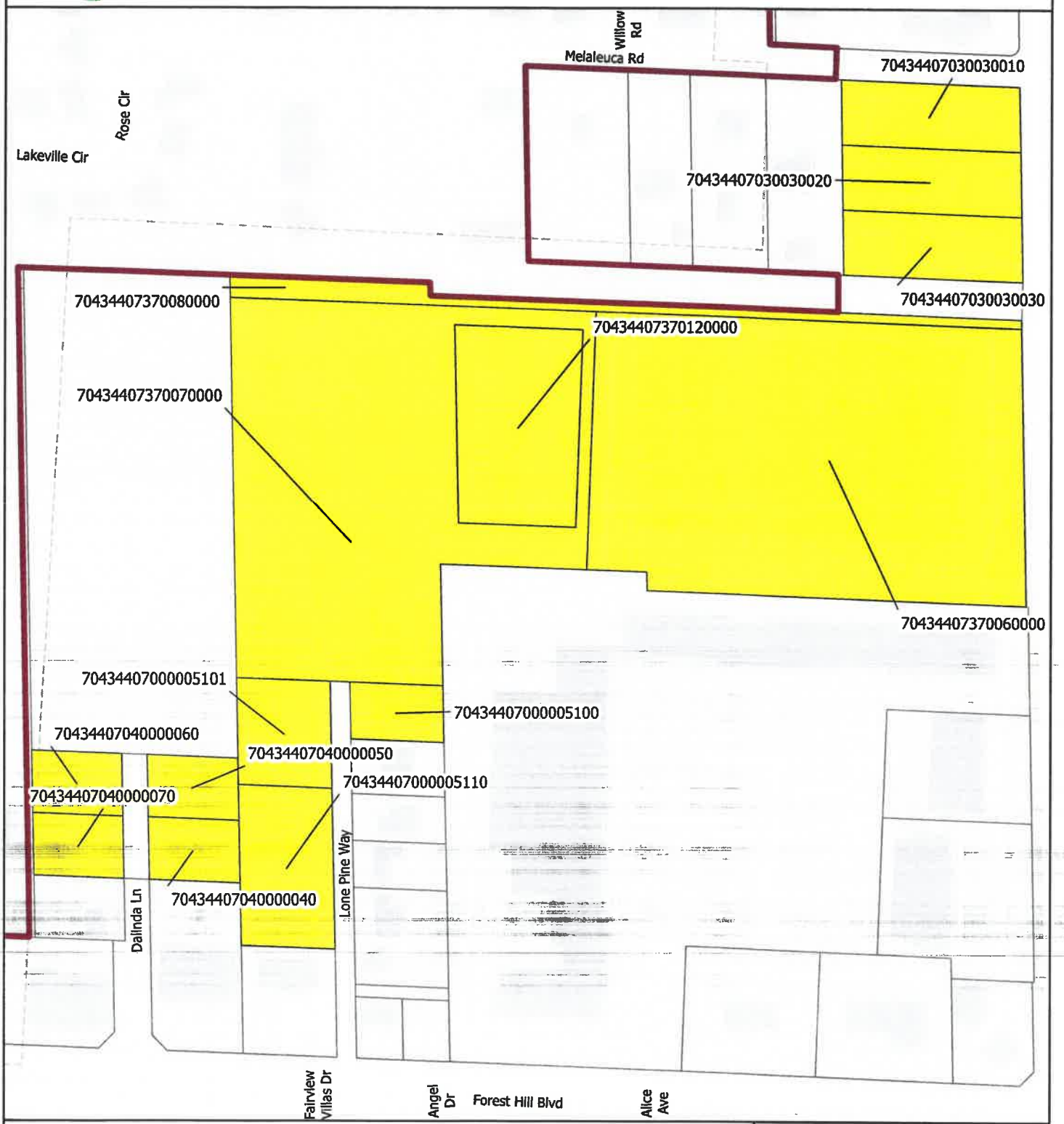

Legend

- Proposed Parcels
- Parcels
- Village Boundary

Date: 10/27/2022
When Printed on 8 1/2" x 11"
1 inch equals 250 feet
0 250 Feet

Florida Technical Consultants